HOT SPRINGS ELECTRICAL UPGRADE

U.S. DEPARTMENT OF VETERANS AFFAIRS

VA #568A4-24-202
HOT SPRINGS, SD 47747

BID - PERMIT SET
05-09-2025

VICINITY MAP - (HOT SPRINGS, SD - VA CAMPUS LOCATION)

VICINITY MAP - (VA CAMPUS - BUILDING & SITE)

SHEET INDEX - FEDERAL

01 - GENERAL INFORMATION	
GI000	COVER SHEET
03 - CIVIL	
C100	SITE DEMO & LAYOUT
04 - STRUCTURAL	
S-001	STRUCTURAL GENERAL NOTES
S-002	IBC INSPECTION TABLES
S-003	CONCRETE SURFACE REQUIREMENTS
S-101	FOUNDATION, STAIR FRAMING PLAN AND DETAILS
07 - ARCHITECTURAL ELEMENTS	
AE101	ARCHITECTURAL FLOOR PLAN, ROOF PLAN, EXTERIOR ELEVATIONS, STAIR SECTION AND DETAILS
12 - ELECTRICAL	
E001	ELECTRICAL SITE PLAN - DEMOLITION
E002	ELECTRICAL SITE PLAN - REMODEL
E101	PRIMARY SWITCHGEAR BLDG ELECTRICAL PLANS
E102	BUILDING 10 ELECTRICAL PLANS
E103	BUILDING 12 ELECTRICAL PLANS
E201	PRIMARY DISTRIBUTION SYSTEM ONE-LINE-ELECTRICAL DEMOLITION
E202	BUILDING 10 DOMICILIARY MAIN SERVICE - ELECTRICAL DEMOLITION
E203	BUILDING 12 - NORMAL SYSTEM RISER DIAGRAM - ELECTRICAL DEMOLITION
E204	BUILDING 12 EMERGENCY SYSTEM RISER DIAGRAM - ELECTRICAL DEMOLITION
E301	PRIMARY DISTRIBUTION SYSTEM ONE-LINE-ELECTRICAL REMODEL
E302	BUILDING 10 DOMICILIARY MAIN SERVICE - ELECTRICAL REMODEL
E303	BUILDING 12 - NORMAL SYSTEM RISER DIAGRAM - ELECTRICAL REMODEL
E304	BUILDING 12 EMERGENCY SYSTEM RISER DIAGRAM - ELECTRICAL REMODEL
E401	ELECTRICAL PRIMARY SWITCHGEAR ELEVATIONS
E501	ELECTRICAL SCHEDULES

TOTAL SHEET COUNT: 22

REVISION #	DESCRIPTION	DATE
01	BID - PERMIT SET	05/09/2025

CONSULTANTS

CIVIL:
FMG ENGINEERING
FMG ENGINEERING
3700 STURGIS RD
RAPID CITY, SD 57702-0317
Phone: 605-342-4105
ALEX FISHER

STRUCTURAL:
Albertson Engineering Inc.
ALBERTSON ENGINEERING INC.
3202 W MAIN ST SUITE C
RAPID CITY, SD 57702
Phone: 605-343-9606
STEPHEN KILBER

MEP:
WPE WEST PLAINS ENGINEERING, INC.
WEST PLAINS ENGINEERING, INC.
1750 RAND RD
RAPID CITY, SD 57702
Phone: 605-348-7455
DAREN BECKLOFF

DESIGNER OF RECORD

A/E:
STONE GROUP ARCHITECTS
600 EAST 7TH STREET
SIOUX FALLS, SD 57103
605-271-1144
GARRY BLACK
STONE GROUP ARCHITECTS

STAMP

REGISTERED ARCHITECT
REGISTERED
TODD RANDALL STONE
SOUTH DAKOTA
5-9-25

Office of Construction and Facilities Management
VA U.S. Department of Veterans Affairs

Drawing Title: COVER SHEET	Phase: BID - PERMIT SET	Project Title: HOT SPRINGS ELECTRICAL UPGRADE	Project Number: VA #568A4-24-202, SGA #241938
Approved: DOUG SPRINKLE	FULLY SPRINKLERED	Location: HOT SPRINGS, SD 47747	Building Number: 10, 12 & 64
		Issue Date: 05-09-2025 / Checked: GB / Drawn: DT	Drawing Number: GI000

VA FORM 08 - 6231

C:\Users\stoupel\Documents\241938_VA Hot Springs_Elec Upgrade_Darrin\22R1_r.rvt

5/8/2025 5:19:39 PM

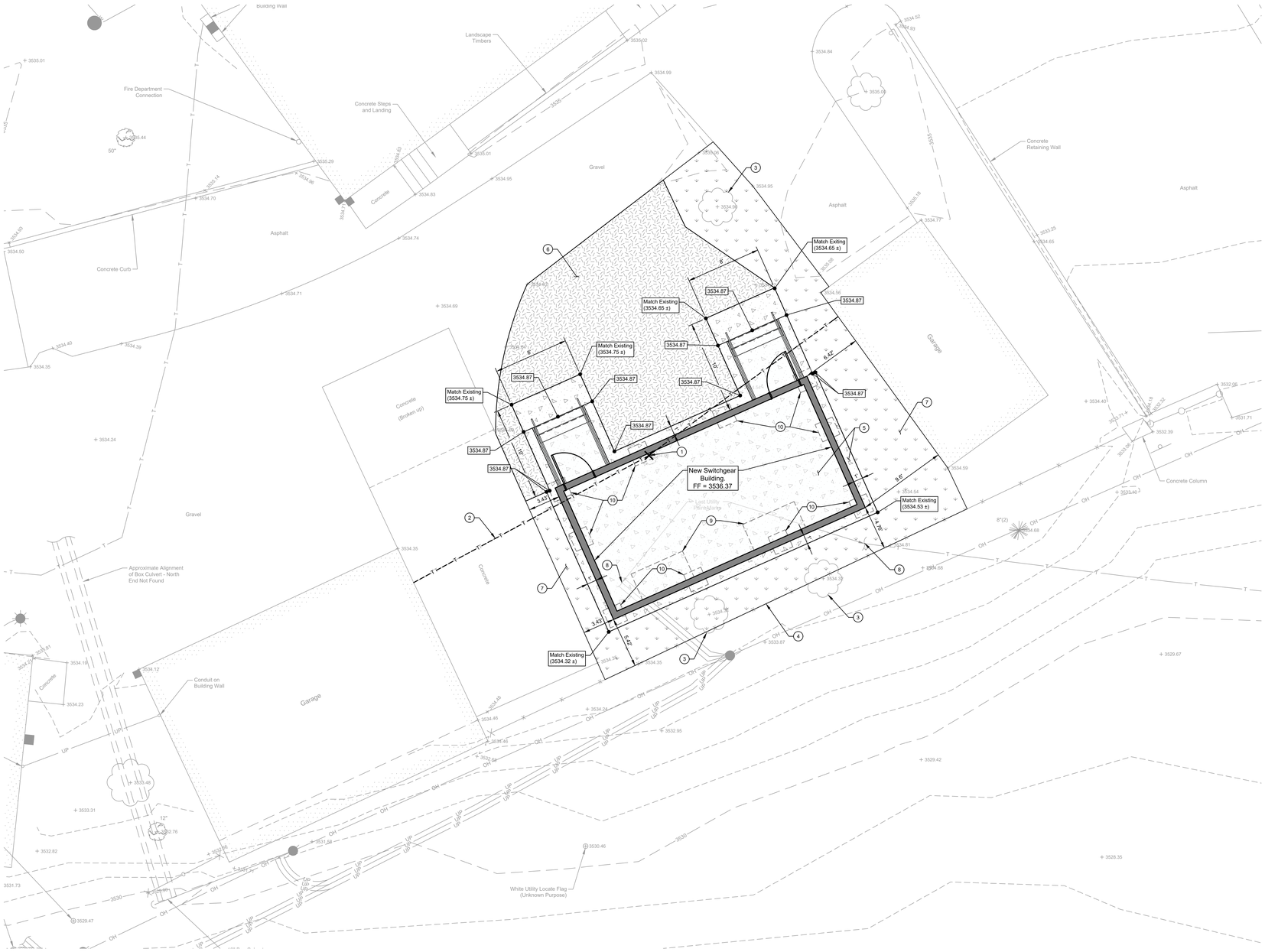

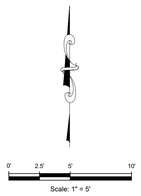

Proposed Legend

- Seeded Area
- 4" Gravel Surfacing
- Concrete Pad
- Remove Telephone Line
- Remove Tree

Site Callouts

Callout No.	Description
1	Remove Tree (1 EA)
2	Remove Telephone Line and Reroute as Necessary
3	Protect & do not Disturb Shrub
4	Protect & do not Disturb Barbed Wire Fence
5	Concrete Pad (76 SY)
6	4" Gravel Surface to Match Existing Grades (53 SY)
7	Seeded Area (55 SY)
8	Underground Utilities not Marked During Utility Locate Request. Contractor to Pothole as Necessary to Locate Horizontal and Vertical Locations of Underground Utilities and Relocate as Necessary to Avoid New Construction.
9	Electrical Vaults Below Slab. Coordinate with Electrical & Structural Drawings for Specification & Design.
10	Building Foundation Piles, See Structural

Note:

1) Gravel surface area at north side of switch gear building to be stripped of all top soil and organics and subgrade moisture conditioned and recompacted per geotechnical report.

2) New gravel surfacing at north side of switchgear building to consist of limestone ledgerock base course meeting requirements of SDDOT Standard Specification (2015) Section 882.2. Gravel surfacing to be placed to a minimum thickness of 4".

Topsoil - Salvage, Stockpile, and Placement

Prior to excavation, the Contractor shall strip and stockpile all the available topsoil. The topsoil shall be completely stripped to the full depth beneath all areas that will need to be excavated. The Contractor shall stockpile the topsoil in a neat and uniform manner in an easily identifiable location.

Topsoil shall be placed to a minimum depth of **4"** using topsoil salvaged from the site grading. Topsoil salvaging, stockpiling, and placement shall be in accordance with section 230 of SDDOT Standard Specifications for Roads and Bridges.

Revegetation

All disturbed areas that are proposed as turf and existing turf areas that were disturbed from construction activities will need to be revegetated per the seeding, fertilizing, and mulching notes on this sheet. Revegetation shall consist of salvaged or/and imported topsoil placement, seeding, fertilizing, and mulching.

Seeding, Fertilizing, and Mulching

Topsoil placement, seeding, fertilizing, and mulching shall be in accordance with sections 230, 730, 731, and 732 of SDDOT Standard Specifications for Roads and Bridges.

Unless otherwise specified, the following shall be used:

- The seed mixture to be used shall be **SDDOT Type F Permanent Seed Mixture (**Modified - See Table).
- Drilled Seeding rates shall be DOUBLED in areas shown as Erosion Control Blanket, Turf Reinforcement Mat, or for areas that require hand seeding.
- Cover Crop Seeding may be used per the referenced specification. The use of a Cover crop will be at the Contractors expense, no extra payment will be made for using a cover crop.
- Drilling or Hydro seeding methods are allowed for seeding.
- Fertilizer type and quantity for projects with seeding areas less than two acres shall be a commercial fertilizer with a minimum guaranteed analysis of 18-46-0 or an approved alternate fertilizer. The application rate shall be at 3 pounds per 1,000 sf.
- Mulch shall be fiber mulch applied at a rate of 3,000 pounds per acre. An additional 2% by weight of tackifier will be added to the fiber mulch product .
- The Contractor shall allow the fiber mulch to cure a minimum of 18 hours prior to watering or any storm event to ensure proper cohesion between the soil and fiber particles.

Watering

Water for vegetation consists of applying water to seeded areas to enhance germination and/or root growth. When watering, use the following guidelines:

Immediately after seeding:

- Keep the topsoil moist but not excessively wet until the seed has germinated.
- Water a minimum of 3 days a week for 2 weeks preferably watering 2 or 3 times a day in small quantities. Additional watering may be required.
- Use fine spray and low pressure to avoid topsoil wash and to prevent uncovering buried seeds.

After emergence:

- Topsoil will be kept thoroughly moistened by sprinkling, as necessary, for 6 weeks. After the 6-week period, an inspection will be made to determine if grass is established enough to suspend watering. Continue watering until grass has been thoroughly established.
- Never apply water at a rate faster than the topsoil can absorb.
- Water during early morning hours or early evening hours.
- Do not water when rain is forecasted for the area.
- If rainfall occurs, suspend watering according to rainfall amount.

No extra payment will be made for watering

Care During Construction and Final Inspection

The Contractor is responsible for smoothing dirt ridges, which result from his/her operations or from traffic. Such ridges shall be smoothed so they will not interfere with future mowing. Following completion of seeding operations, foot, vehicular, or equipment traffic over the seeded area shall be kept to a minimum. Areas damaged from such traffic shall be reworked and reseeded as determined by the Engineer or Owner.

Reseeding of Previously Seeded Areas

Existing weeds and cover crop shall be preserved for its mulch value. The seed shall be drilled directly into existing cover if possible, or mowing and disking shall be provided to permit penetration of drill openers and placement of seed to the specified depth.

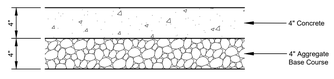

4" CONCRETE PAD SECTION
Not To Scale

Seed mixture shall be as follows: SDDOT Type F Permanent Seed Mixture (modified)
Seed rate given is for drilled seed.

Seed Mixture Table

Grass Species	Variety	Pure Live Seed (PLS) (Pounds/Acre)
Western Wheatgrass	Arriba, Flintlock, Rodan, Rosana, Walsch	49
Green Needlegrass	Lodorm, AC Mallard Ecovar	28
Sideoats Grama	Butte, Pierre	21
Blue Grama	Bad River	14
Oats or Spring Wheat: April Through May Winter Wheat: August through November		70
	Total	182

Concrete for Concrete Pad
Concrete shall have a minimum compressive strength at 28 days of 3000 psi.

NO.	DESCRIPTION	DATE
01	BID - PERMIT SET	05/09/2025

CONSULTANTS

CIVIL:
FMG ENGINEERING
3100 Sturgis Road
Rapid City, SD 57702
605.342.4105 • fmgengineering.com
FMG Job # 241471.00

STRUCTURAL:
Albertson Engineering Inc.
605.341.7900 www.albertsoneng.com
Where Your Ideas Become Reality
ALBERTSON ENGINEERING INC.
3202 W MAIN ST SUITE C
RAPID CITY, SD 57702
Phone: 605-343-9606
STEPHEN KILBER

MEP:
WPE WEST PLAINS ENGINEERING, INC.
WEST PLAINS ENGINEERING, INC.
1750 RAND RD
RAPID CITY, SD 57702
Phone: 605-348-7455
DAREN BECKLOFF

DESIGNER OF RECORD

A/E:
STONE GROUP ARCHITECTS
600 EAST 7TH STREET
SIOUX FALLS, SD 57103
605-271-1144
GARRY BLACK
STONE GROUP ARCHITECTS

STAMP

REGISTERED PROFESSIONAL ENGINEER
REG. NO.
8461
ALEX M. FISHER
04-25-25

Office of Construction and Facilities Management
VA U.S. Department of Veterans Affairs

Drawing Title: Site Demo & Layout	Phase: BID - PERMIT SET	Project Title: HOT SPRINGS ELECTRICAL UPGRADE	Project Number: VA #568A4-24-202 SGA #241938
Approved: DOUG SPRINKLE	FULLY SPRINKLERED	Location: HOT SPRINGS, SD 47747	Building Number: 10, 12 & 64
		Issue Date: 04-09-2025 / Checked: AF / Drawn: JS	Drawing Number: C100

VA FORM 08 - 6231

2024171.00 Sioux Grp\Hot Springs VA Renovate Electrical Equipment\CAD\Design Drawings\241471_Design.dwg , Hot Springs VA , Thursday, May 1, 2025 12:47:08 PM

STRUCTURAL GENERAL NOTES

GENERAL NOTES:

1. STRUCTURAL DRAWINGS SHALL BE USED IN CONJUNCTION WITH JOB SPECIFICATIONS AND ARCHITECTURAL, MECHANICAL, ELECTRICAL, PLUMBING AND SITE DRAWINGS. CONSULT THESE DRAWINGS FOR SLEEVES, DEPRESSIONS AND OTHER DETAILS NOT SHOWN ON STRUCTURAL DRAWINGS.
2. ALL DIMENSIONS AND CONDITIONS MUST BE VERIFIED IN THE FIELD. ANY DISCREPANCIES SHALL BE BROUGHT TO THE ATTENTION OF THE ENGINEER BEFORE PROCEEDING WITH THE AFFECTED PART OF THE WORK.
3. THE STRUCTURE IS DESIGNED TO BE SELF SUPPORTING AND STABLE AFTER THE BUILDING IS COMPLETE. IT IS THE CONTRACTOR'S SOLE RESPONSIBILITY TO DETERMINE ERECTION PROCEDURES AND SEQUENCE TO ENSURE SAFETY OF THE BUILDING AND ITS COMPONENTS DURING ERECTION. THIS INCLUDES THE ADDITION OF NECESSARY SHORING, SHEETING, TEMPORARY BRACING (AND ACCOMPANYING FOOTINGS), GUYS OR TIE-DOWNS.
4. ADDITIONAL OBSERVATIONS AS A RESULT OF REJECTION OF WORK COMPLETED AND/OR ADDITIONAL OBSERVATIONS DUE TO THE ENGINEER'S ACTIONS IN WORK OBSERVED WILL BE AT THE EXPENSE OF THE CONTRACTOR.
5. ALL STRUCTURAL SHOP DRAWINGS TO BE REVIEWED BY JOB SUPERINTENDENT IN ADDITION TO ALL PERSONNEL DEEMED NECESSARY BY CONTRACTOR PRIOR TO SUBMITTAL TO ENGINEER FOR APPROVAL.
6. ALL SHOP DRAWINGS TO BE REVIEWED BY ALBERTSON ENGINEERING INC. SHALL HAVE ELECTRONIC COPIES PROVIDED TO ALBERTSON ENGINEERING INC. FOR REVIEW. AN ELECTRONIC MARKED SET OF THOSE DRAWINGS WILL BE RETURNED TO THE CONTRACTOR. NO ADDITIONAL HARD COPIES OF THE SHOP DRAWINGS NEED TO BE PROVIDED TO ALBERTSON ENGINEERING INC., ALTHOUGH OTHER PARTIES MAY REQUIRE HARD COPIES OF THE MARKED UP DRAWINGS. THESE REQUIREMENTS ARE IN ADDITION TO THE TYPICAL PROJECT SHOP DRAWING SUBMITTAL REQUIREMENTS STATED IN THE PROJECT SPECIFICATIONS.
7. THE DESIGN OF THE STRUCTURE SHOWN IN THESE CONSTRUCTION DOCUMENTS IS FOR THE ONE-TIME USE AT THE SPECIFIC SITE REFERENCED IN THE GEOTECHNICAL REPORT.

DESIGN CODES:

- 2018 INTERNATIONAL BUILDING CODE.
- ACI 318-19 BUILDING CODE REQUIREMENTS FOR STRUCTURAL CONCRETE AND COMMENTARY.
- AISC 360-16 SPECIFICATIONS FOR STRUCTURAL STEEL BUILDINGS.
- ASCE 7-16 MINIMUM DESIGN LOADS AND ASSOCIATED CRITERIA FOR BUILDINGS AND OTHER STRUCTURES.

DESIGN LOADS:

THE STRUCTURAL SYSTEM FOR THIS BUILDING HAS BEEN DESIGNED WITH THE FOLLOWING SUPERIMPOSED LOADINGS BASED ON A RISK CATEGORY IV:

ROOF:

SNOW LOAD	34 PSF + DRIFT
GROUND SNOW LOAD	40 PSF
SNOW EXPOSURE FACTOR	1.0
SNOW THERMAL FACTOR	1.0
SNOW IMPORTANCE FACTOR	1.1
DEAD LOAD	20 PSF

WIND:

ULTIMATE WIND SPEED	120 MPH
EXPOSURE CATEGORY	C
INTERNAL PRESSURE COEFFICIENT	±0.18

PENETRATIONS:

NO PENETRATIONS SHALL BE MADE IN ANY STRUCTURAL MEMBERS OTHER THAN THOSE LOCATED ON THESE DRAWINGS WITHOUT PREVIOUS APPROVAL OF THE ENGINEER.

FOUNDATIONS:

FOUNDATIONS ARE DESIGNED FOR AN ALLOWABLE SOIL BEARING PRESSURE OF 2,000 PSF ON EXISTING SOILS. BEFORE CONSTRUCTION COMMENCES, SOIL BEARING CAPACITY SHALL BE VERIFIED BY A SUBSURFACE INVESTIGATION, A CERTIFIED TESTING LABORATORY, WHOSE REPORT SHALL INCLUDE ANALYSIS AND RECOMMENDATIONS FOR SITE PREPARATION IN ORDER TO BEAR THE FOUNDATION LOADS. ABOVE REPORT SHALL BE SUBMITTED TO THE STRUCTURAL ENGINEER FOR REVIEW BEFORE FOUNDATION CONSTRUCTION BEGINS.

CONCRETE TESTING:

1. CONCRETE TESTING SHALL BE PAID FOR BY THE OWNER. TESTING LABORATORY SHALL PERFORM THE FOLLOWING TEST ON CAST-IN-PLACE CONCRETE:
   A. ASTM C143 - "STANDARD TEST METHOD FOR SLUMP OF PORTLAND CEMENT CONCRETE."
   B. ASTM C39 - "STANDARD TEST METHOD FOR COMPRESSIVE STRENGTH OF CYLINDRICAL CONCRETE SPECIMENS. A SEPARATE TEST SHALL BE CONDUCTED FOR EACH CLASS, FOR EVERY 50 CUBIC YARDS (OR FRACTION THEREOF), PLACED PER DAY. REQUIRED CYLINDER(S) QUANTITIES AND TEST AGE AS FOLLOWS:
      a. (1) AT 7 DAYS
      b. (2) AT 28 DAYS
      c. (1) ADDITIONAL RESERVE CYLINDER TO BE TESTED UNDER THE DIRECTION OF THE ENGINEER, IF REQUIRED. IF 28 DAY STRENGTH IS ACHIEVED, THE ADDITIONAL CYLINDER(S) MAY BE DISCARDED.
   C. TESTING SHALL BE BASED UPON CONCRETE TAKEN AT POINT OF PLACEMENT.
   D. IN ADDITION TO TYPICAL TESTING REQUIREMENTS, SLUMP AND AIR CONTENT SAMPLES SHALL BE TAKEN AT BEGINNING OF FIRST TRUCK PRIOR TO ANY PLACEMENT AND REPEATED AT THE MIDDLE OF FIRST TRUCK. CONCRETE PLACEMENT SHALL NOT START IF INITIAL TEST(S) FAIL AND SHALL NOT CONTINUE IF TEST TAKEN AT MIDDLE OF FIRST LOAD FAILS.
   E. IF ANY SLUMP OR AIR CONTENT FAILS DURING PLACEMENT, TESTS SHALL BE IMMEDIATELY REPORTED AND RETAKEN. IF RETAKEN TESTS FAIL THEN ALL SUBSEQUENT LOADS MUST BE TESTED AT ARRIVAL AND TEST MUST SHOW COMPLIANCE PRIOR TO THE CONCRETE IN THAT TRUCK BEING ALLOWED FOR USE ON PROJECT. ALL COSTS FOR ADDITIONAL TESTING SHALL BE COMPLETED AT NO EXPENSE TO THE OWNER.

CONCRETE MIX DESIGN:

1. CONCRETE MIX SHALL BE DESIGNED BY RECOGNIZED TESTING LABORATORY TO ACHIEVE A STRENGTH AT 28 DAYS AS SHOWN IN THE BELOW CONCRETE PROPERTIES SCHEDULE WITH A PLASTIC AND WORKABLE MIX.

CONCRETE PROPERTIES

LOCATION	28 DAY COMPRESSIVE STRENGTH	ENTRAINED AIR	SLUMP	MAX W/C RATIO
ALL LOCATIONS	4,500 PSI	4.0% - 6.0%	5" +/- 1"	0.45

2. SUBMIT PROPOSED MIX DESIGN WITH RECENT FIELD CYLINDER OR LAB TESTS FOR REVIEW PRIOR TO USE. MIX SHALL BE UNIQUELY IDENTIFIED BY MIX NUMBER OR OTHER POSITIVE IDENTIFICATION. CONCRETE SHALL COMPLY WITH ALL THE REQUIREMENTS OF ASTM STANDARD C94 FOR MEASURING, MIXING, TRANSPORTING, ETC. CONCRETE TICKETS SHALL BE TIME STAMPED WHEN CONCRETE IS batched. THE MAXIMUM TIME ALLOWED FROM THE TIME THE MIXING WATER IS ADDED UNTIL IT IS DEPOSITED IN ITS FINAL POSITION SHALL NOT EXCEED ONE AND ONE HALF (1-1/2) HOURS. IF FOR ANY REASON THERE IS A LONGER DELAY THAN STATED ABOVE, THE CONCRETE SHALL BE DISCARDED. IT SHALL BE THE RESPONSIBILITY OF THE TESTING LAB TO NOTIFY THE OWNER'S REPRESENTATIVE AND THE CONTRACTOR OF ANY NONCOMPLIANCE WITH THE ABOVE. ALL SLABS SHALL BE CURED USING CURING COMPOUND MEETING ASTM STANDARD C309 TYPE 1 AND SHALL HAVE A FUGITIVE DYE. THE COMPOUND SHALL BE PLACED AS SOON AS THE FINISHING IS COMPLETED OR AS SOON AS THE WATER HAS LEFT THE UNFINISHED CONCRETE. ALL SCUFFED OR BROKEN AREAS IN THE CURING MEMBRANE SHALL BE RECOATED DAILY. CALCIUM CHLORIDES SHALL NOT BE UTILIZED; OTHER ADMIXTURES MAY BE USED ONLY WITH THE APPROVAL OF THE ENGINEER.
3. ALL CONCRETE SHALL UTILIZE TYPE IL CEMENT.
4. COARSE AND FINE AGGREGATES WITHIN ALL CONCRETE EXCEPT CONCRETE USED FOR FOOTINGS, FOUNDATION WALLS, AND PIERS SHALL COMPLY WITH ASTM C33 AND ACI 302.1, CURRENT VERSIONS.
   a. COMPLIANCE WITH THE NON-REACTIVE REQUIREMENTS OF ACI 302.1 SHALL NOT BE PROVIDED FOR BY THE PROVISION OF ACI 302.1 (SUBSECTION 7.3) THAT EXCLUDES THE AGGREGATES BEING CLASSIFIED AS DELETERIOUSLY REACTIVE WITH ALKALIES IF THE AGGREGATE HAS A SATISFACTORY SERVICE RECORD EVALUATION OR WITH THE ADDITION OF A MATERIAL THAT HAS SHOWN TO PREVENT HARMFUL EXPANSION DUE TO ALKALI-AGGREGATE REACTION.
   b. CONCRETE MIX DESIGN SHALL INCLUDE TEST RECORDS OF THE COMPLIANCE OF THE AGGREGATE MEETING THE REQUIREMENTS OF ASTM C1260, AND THAT THE EXPANSION OF THE MORTAR SAMPLE SHALL NOT EXCEED 0.10% WHEN TESTED IN ACCORDANCE WITH ASTM C1260 AT 14 DAYS. USE OF ADMIXTURES THAT MITIGATE THE EFFECT OF THE REACTIVE AGGREGATE TO BE PROPOSED IN CONCRETE MIX SHOP DRAWING MAY BE AN APPROVED APPROACH BY THE ENGINEER TO ALLOW FOR THE USE OF OTHERWISE REACTIVE AGGREGATES. IF SUCH MITIGATING MEASURES ARE PROPOSED, THEY MUST BE INCLUDED WITHIN MIX DESIGN SUBMITTAL. THE ENGINEER IS GIVEN DISCRETION AS TO WHETHER OR NOT TO ACCEPT MITIGATING MEASURES OR TO MAINTAIN REQUIREMENTS THAT NONREACTIVE AGGREGATES MUST BE USED. AT A MINIMUM, SUCH DOCUMENTATION MUST SHOW THAT REACTIVE AGGREGATES USED IN COMBINATION WITH A GIVEN AMOUNT OF ADMIXTURE RESULTS IN THE EXPANSION OF THE MORTAR SAMPLE BEING LESS THAN 0.10% WHEN TESTED IN ACCORDANCE WITH ASTM C1567 AT 14 DAYS. LIABILITY OF THE PERFORMANCE OF THE CONCRETE MIX REMAINS SOLELY WITH GENERAL CONTRACTOR.
   c. IF CONCRETE MIXES ARE APPROVED BY THE ENGINEER THAT CONTAIN EITHER FINE OR COARSE AGGREGATE, THAT EITHER SEPARATELY OR IN COMBINATION EXCEED THE 0.10% EXPANSION WHEN TESTED ACCORDING TO ASTM C1260, SPECIAL CONSIDERATIONS MUST BE GIVEN TO SLAB CURING (SLABS ON GRADE AND ELEVATED SLABS). IN SUCH INSTANCES SLABS SHALL BE CURED USING EITHER A WET BURLAP OR CONTINUOUS WETTING/FOGGING METHOD FOR SLABS FOR AT LEAST 10 DAYS. USE OF CURING AND/OR SEALING COMPOUNDS IS NOT ACCEPTABLE UNTIL THE SLAB HAS CURED A MINIMUM OF 28 DAYS AND THE CONDITIONS FOR THE APPLICATION OF THE CURING COMPOUND ON THE CONCRETE SLAB SET BY THE MANUFACTURER'S RECOMMENDATIONS HAVE BEEN MET.
   d. ENGINEER HAS SOLE DISCRETION IN DETERMINING ACCEPTABILITY OF A CONCRETE SLAB THAT IS EXHIBITING ALKALI-SILICA REACTION. FOR SLABS SHOWING AN ALKALI SILICA REACTION SOLELY WITHIN THE FINE AGGREGATE: A SLAB SHOWING AN AVERAGE DENSITY OF POPOUTS GREATER THAN 1 PER 8 SQUARE FEET OVER ANY CONTIGUOUS AREA OF 100 SQUARE FEET OR LARGER, OR ANY AREA WITH A DENSITY OF 1 POPOUTS PER 2 SQUARE FEET WITHIN ANY AREA UP TO 100 SQUARE FEET WOULD BE CONSIDERED AS A BASIS FOR THE REJECTION OF THE SLAB FROM WHICH THOSE SAMPLE AREAS ARE INCUTTED FOR A ALKALI SILICA REACTION WITHIN THE COARSE AGGREGATE: THE POPOUT DENSITIES CONSIDERED FOR REJECTION OF THE CONCRETE SLAB SHALL BE ½ OF THE DENSITIES GIVEN FOR FINE AGGREGATE. THE EXTENT OF REJECTED SLAB TO BE DETERMINED BY ENGINEER. THE TIME FRAME FOR OBSERVATION OF ALKALI SILICA REACTIONS AND DETERMINATION OF REJECTION OF THE CONCRETE SLAB SHALL BE AT LEAST 56 DAYS FROM THE DATE OF POUR.
   e. CONCRETE MIXES UTILIZING CRUSHED LIMESTONE AS COARSE AGGREGATE AND CONTAINING AT LEAST 25% CLASS F FLY ASH AND HAVING A SATISFACTORY SERVICE RECORD PER ACI 302.1 IS CONSIDERED AN ACCEPTABLE ALTERNATIVE APPROACH TO THE COMPLIANCE REQUIREMENTS OUTLINED IN PROVISIONS 4a THROUGH 4d ABOVE.
5. THE CONCRETE STRENGTHS SHOWN IN THE SECTION ABOVE AND IN THE SPECIFICATIONS ARE MINIMUM COMPRESSIVE STRENGTHS. THE ENGINEER SHALL DETERMINE IF THE CONCRETE IS ACCEPTABLE, OR TO BE REMOVED, OR TO RECEIVE SPECIAL CURING IF THE COMPRESSIVE STRENGTHS ARE LESS THAN SPECIFIED.
6. WATER REDUCING AGENTS MAY BE USED IN THE CONCRETE MIX. PLASTICIZERS AND SUPER-PLASTICIZERS MAY BE USED ONLY WHEN WRITTEN PERMISSION OF THE ENGINEER IS GIVEN.
7. NO SALTS OF ANY KIND MAY BE USED IN CONCRETE BEFORE OBTAINING THE ENGINEER'S WRITTEN PERMISSION FOR THEIR USE.

CONCRETE AND REINFORCING PLACEMENT:

1. ALL CONCRETE SHALL BE PLACED IN ACCORDANCE WITH ACI 301 AND ACI 117 EXCEPT AS MODIFIED BELOW:
   A. ACI 117 ITEM 4.3.1.1 ELEVATIONS OF SLABS-ON-GRADE TOP OF SLAB ELEVATION SHALL BE WITHIN A 3/8" ENVELOPE EITHER SIDE OF THE THEORETICAL DESIGN SURFACE.
   B. ACI 117 ITEM 4.5.7 FLOOR FINISH TOLERANCES AS MEASURED BY PLACING A FREESTANDING (UNLEVELED) 10 FT. STRAIGHTEDGE ANYWHERE ON THE SLAB AND ALLOWING IT TO REST UPON TWO HIGH SPOTS WITHIN 28 DAYS AFTER SLAB CONCRETE PLACEMENT. THE GAP AT ANY POINT BETWEEN THE STRAIGHT EDGE AND THE FLOOR SHALL NOT EXCEED 1/4".
2. ALL REINFORCING STEEL TO BE ASTM A615, GRADE 60 (#4 AND LARGER), EXCEPT WHERE NOTED OTHERWISE. REINFORCING SHALL NOT BE WELDED
3. WELDED WIRE REINFORCEMENT TO CONFORM TO ASTM A1064 AND SHALL BE FREE FROM OIL, SCALE, AND RUST. PLACE WWR IN ACCORDANCE WITH THE TYPICAL PLACING DETAILS OF ACI STANDARDS AND THE SPECIFICATIONS. MINIMUM LAPS SHALL BE ONE SPACE PLUS 2".
4. ALL REINFORCING STEEL BARS TO BE DETAILED AND PLACED IN ACCORDANCE WITH THE LATEST ACI MANUALS.
5. LAP ALL REINFORCING SPLICES IN CONCRETE A MINIMUM OF 48 BAR DIAMETERS OR 24 INCHES, WHICHEVER IS GREATER, UNLESS NOTED OTHERWISE ON DRAWINGS (CLASS B SPLICE).
6. PROVIDE CORNER BARS OF SAME BAR DIAMETER AS SPECIFIED FOR THE WALL BEAM OR FOOTING. PROVIDE MINIMUM OF 40 BAR DIAMETER LAP FOR ALL CORNER BARS, UNLESS NOTE OTHERWISE.
7. PROVIDE FOUNDATION DOWELS AS SHOWN. MINIMUM SIZE DOWELS TO BE #4, UNLESS OTHERWISE NOTED. ALL VERTICAL REINFORCING STEEL IN COLUMNS AND PIERS, OR VERTICAL REINFORCING IN WALLS, SHALL BE DOWELED INTO THE FOOTINGS WITH SAME SIZE AND QUANTITY DOWEL AS THE VERTICAL REINFORCING.
8. WHERE SHOWN ON THE DRAWINGS, PROVIDE WELD PLATES, WELDMENTS, OR CONCRETE INSERTS FOR FASTENING AND SECURING OTHER COMPONENTS. CONCRETE INSERTS SHALL BE FURNISHED BY THE CONTRACTOR REQUIRING THEM AND INSTALLED BY THE CONTRACTOR CASTING THE CONCRETE AROUND THEM. CLIP ANGLES SHALL BE FURNISHED BY THE CONTRACTOR REQUIRING THEM.
9. REINFORCING STEEL SHALL RECEIVE CONCRETE COVER AS FOLLOWS:

DESCRIPTION	MINIMUM COVER
CAST AGAINST & PERMANENTLY EXPOSED TO EARTH	3"
EXPOSED TO EARTH OR WEATHER	
#6 THROUGH #18 BARS	2"
#5 BARS OR SMALLER	1 1/2"
NOT EXPOSED TO EARTH OR WEATHER OR IN CONTACT WITH THE GROUND, SLABS AND WALLS	
#11 BARS OR SMALLER	3/4"
#14 AND #18	1 1/2"
BEAMS AND COLUMNS	1 1/2"
SHELLS, FOLDED PLATE MEMBERS:	
NO. 6 BAR AND LARGER	3/4"
NO. 5 BAR, W31 OR D31 WIRE AND SMALLER	1/2"

10. PROVIDE TWO (2) #5'S, ONE AT EACH FACE, UNLESS NOTED OTHERWISE, AROUND ALL OPENINGS LESS THAN 12"x12" IN CAST-IN-PLACE CONCRETE. EXTEND REINFORCING 2'-0" BEYOND OPENING IN BOTH DIRECTIONS. CONTACT ENGINEER FOR ALL OPENINGS GREATER THAN 12"x12" FOR DESIGN.
11. COLD WEATHER AND HOT WEATHER PROVISIONS OF ACI 306 AND 305 (CURRENT EDITIONS), RESPECTIVELY, SHALL BE MAINTAINED.
12. CONTRACTOR TO FURNISH AND INSTALL 500 LINEAL FEET EACH OF ADDITIONAL #4 & #5 REINFORCING STEEL TO BE USED AT ENGINEER'S DISCRETION.
13. UNLESS NOTED OTHERWISE ALL UNDER SLAB VAPOR RETARDERS SHALL CONFORM TO THE REQUIREMENTS OF ASTM E1745 CLASS A AND SHALL BE INSTALLED AS PER MANUFACTURER'S RECOMMENDATIONS.
14. FLOOR FLATNESS AND LEVELNESS TOLERANCES:
   A. MINIMUM F_F & F_L NUMBERS PER ASTM E1155.
      $F_F = 35$
      $F_L = 25$
   B. CORRECT SLAB SURFACE IF COMPOSITE OVERALL VALUE IS LESS THAN SPECIFIED OR IF LOCAL VALUE IS LESS THAN 2/3 OF THE SPECIFIED F_F OR F_L NUMBERS.
   C. CORRECT BY REMOVAL AND REPLACEMENT OF DEFECTIVE WORK.
15. OWNER SHALL ENGAGE PARTY TO TEST F_F & F_L NUMBERS WITHIN 72 HOURS OF CASTING. CONTRACTORS MUST PROVIDE 10 DAYS NOTICE PRIOR TO CASTING CONCRETE SLAB-ON-GRADE SECTIONS.
16. PRIOR TO SCREEDING AN ELEVATED SLAB, CONCRETE SHALL BE UNIFORMLY PLACED ON ALL (3) SPANS OF THE DECK TO A THICKNESS APPROXIMATELY EQUAL TO THE SPECIFIED SLAB THICKNESS AT EACH BEAM OR JOIST LINE.
17. CONTRACTOR IS RESPONSIBLE FOR ESTIMATING CONCRETE QUANTITIES ON ELEVATED SLABS AND SHALL ACCOUNT FOR DEFLECTIONS IN THE FLOOR STRUCTURE.
18. CONTRACTOR SHALL MAINTAIN A CONSTANT THICKNESS OVER THE ENTIRE ELEVATED SLAB. ELEVATED SLAB THICKNESS SHALL NOT BE 3/8" GREATER THAN OR 1/4" LESS THAN THE SPECIFIED THICKNESS.
19. LASER SCREED OR OTHER SIMILARLY FUNCTIONING EQUIPMENT SHALL NOT BE PERMITTED FOR ELEVATED SLABS UNLESS AUTHORIZED BY ALBERTSON ENGINEERING INC.

MICROPILE FOUNDATION:

1. MICROPILE FOUNDATION SYSTEM SHALL BE DESIGNED BY SPECIALTY CONTRACTOR TO THE CONFIGURATION AND LOAD CARRYING CAPACITY SHOWN ON THE DRAWINGS AND THE SPECIFICATIONS.
2. MICROPILES SHALL BE DESIGN FOR A MAXIMUM VERTICAL DEFLECTION OF 0.5in.
3. SHOP DRAWINGS AND A LETTER OF CERTIFICATION SHALL BE SUBMITTED FOR REVIEW AND APPROVAL PRIOR TO INSTALLATION. AND SHOP DRAWINGS SHALL BEAR THE SIGNATURE AND SEAL OF A SOUTH DAKOTA REGISTERED PROFESSIONAL ENGINEER. SHOP DRAWINGS SHALL INDICATE THE DESIGN LOADS AND JOB NAME AND NUMBER. THEY SHALL INCLUDE DRAWINGS OF THE MICROPILES AND THE CONNECTION TO THE PILE CAPS.
4. ALTERNATE MICROPILE LAYOUTS ARE ACCEPTABLE ONLY AS A CHANGE ORDER WHICH WILL INCLUDE ENGINEERING CHARGES TO THE CONTRACTOR FOR REDESIGN FOR REVIEW PRIOR TO INSTALLATION.
5. STRUCTURAL DESIGN OF ALL MICROPILE COMPONENTS ARE TO BE DONE BY MICROPILE CONTRACTOR. STRUCTURAL DESIGN TO BE COMPLETED BY A PROFESSIONAL ENGINEER LICENSED IN THE STATE IN WHICH THE PROJECT IS LOCATED. PROFESSIONAL ENGINEER(S), OR SOMEONE WORKING UNDER THEIR DIRECT SUPERVISION SHALL MAKE PERIODIC OBSERVATIONS DURING THE INSTALLATION OF THE MICROPILES TO VERIFY THAT THE INSTALLATION IS IN CONFORMANCE WITH THEIR SEALED DOCUMENTS. A MINIMUM OF TWO SEPARATE OBSERVATIONS SHALL BE MADE BY SUCH PARTY. COST FOR SUCH PROFESSIONAL ENGINEER(S) OR SOMEONE WORKING UNDER THEIR DIRECT SUPERVISION TO BE PAID BY CONTRACTOR. ANY AND ALL DEFICIENT ITEMS SHALL BE RECORDED BY THE PROFESSIONAL ENGINEER AND ITEMS SHALL BE CORRECTED AND CORRECTIONS VERIFIED BY THE PROFESSIONAL ENGINEER(S) FOR THE MICROPILE CONTRACTOR. PROFESSIONAL ENGINEER(S) FOR MICROPILE CONTRACTOR SHALL CERTIFY THAT INSTALLATION IS IN COMPLIANCE WITH THEIR DESIGN DOCUMENTS AT THE COMPLETION OF THEIR WORK. PROFESSIONAL ENGINEER(S) FOR MICROPILE CONTRACTOR SHALL PROVIDE CERTIFICATION AND WRITTEN OBSERVATION REPORTS FOR EVERY VISIT MADE TO THE ARCHITECT. OBSERVATION REPORTS SHALL BE GIVEN TO ARCHITECT WITHIN 3 WORKING DAYS OF THE VISIT TO THE SITE.
6. FOR THE PURPOSES OF THIS STRUCTURAL NOTES SECTION, ALL OF THE FIELD OBSERVATION WORK DESCRIBED TO BE PERFORMED BY PROFESSIONAL ENGINEER RESPONSIBLE FOR DESIGN OF MICROPILES OR SOMEONE WORKING UNDER HIS / HER DIRECT SUPERVISION. ALL OBSERVATION REPORTS TO BE SIGNED BY PERSON WHO MADE OBSERVATION AND PROFESSIONAL ENGINEER RESPONSIBLE FOR THE DESIGN.

POST INSTALLED ANCHORS AND REBAR:

1. ALL PERSONNEL INSTALLING POST-INSTALLED ANCHORS SHALL HAVE COMPLETED INSTALLATION TRAINING FROM THE MANUFACTURER FOR ALL OF THE ANCHORING PRODUCTS SPECIFIED. TRAINING MUST HAVE BEEN COMPLETED NO MORE THAN 5 YEARS FROM THE DATE OF PROJECT INITIATION. IF TRAINING HAS NOT BEEN COMPLETED OR IS MORE THAN 5 YEARS BEFORE THE DATE OF PROJECT INITIATION, THE CONTRACTOR SHALL ARRANGE AN ANCHOR MANUFACTURER'S REPRESENTATIVE TO PROVIDE ON-SITE INSTALLATION TRAINING. CONTRACTOR SHALL SUBMIT DOCUMENT CONFIRMING THAT ALL PERSONNEL INSTALLING ANCHORS HAVE PASSED THE TRAINING COURSE PRIOR TO THE COMMENCEMENT OF INSTALLING ANCHORS.
2. ADHESIVE ANCHORS INSTALLED HORIZONTALLY OR UPWARDLY INCLINED INTO CONCRETE THAT WILL SUPPORT SUSTAINED TENSION LOADS WILL BE MARKED WITH (SUSTAINED) ON THE DRAWINGS. PERSONNEL WHO WILL INSTALL THESE ANCHORS SHALL BE CERTIFIED BY THE ACI/CSI ADHESIVE ANCHOR INSTALLER CERTIFICATION PROGRAM. CONTRACTOR SHALL SUBMIT A DOCUMENT CONFIRMING THAT PERSONNEL HAVE PASSED THE CERTIFICATION PROGRAM PRIOR TO INSTALLING ANCHORS.
3. ALL POST INSTALLED ANCHORS AND REBAR SHALL BE INSTALLED ACCORDING TO MANUFACTURER'S INSTALLATION INSTRUCTIONS.
4. THE FOLLOWING CONDITIONS MUST BE MET FOR ALL ADHESIVE ANCHORS AND ADHESIVE ANCHORED REINFORCEMENT UNLESS WRITTEN APPROVAL IS RECEIVED FROM THE ENGINEER PRIOR TO INSTALLATION.
   A. DRY CONCRETE UNLESS NOTED OTHERWISE.
   B. CONCRETE TEMPERATURE AT TIME OF INSTALLATION THROUGH CURE TIME MUST BE WITHIN THE TEMPERATURE RANGE SPECIFIED IN MANUFACTURER'S PRINTED INSTALLATION INSTRUCTIONS. SEE MANUFACTURER'S PRINTED INSTALLATION INSTRUCTIONS FOR ADHESIVE GEL AND CURE TIMES.
   C. ANCHOR HOLES SHALL BE HAMMER DRILLED.
   D. ANCHOR HOLES TO BE CLEANED PER MANUFACTURER'S PRINTED INSTALLATION INSTRUCTION PRIOR TO ADHESIVE INJECTION.
   E. CONCRETE MUST BE AT LEAST 21 DAYS OLD BEFORE INSTALLATION OF ANCHORS.
5. THE LOCATION OF EXISTING REINFORCING STEEL BARS, POST-TENSIONED STEEL STRANDS, OR PRE-TENSIONED STEEL STRANDS SHALL BE ESTABLISHED PRIOR TO INSTALLING POST INSTALLED ANCHORS OR REINFORCEMENT. LOCATION SHALL BE ESTABLISHED BY USING A SCANNER, GPR, X-RAY, CHIPPING OR OTHER MEANS. EXISTING REINFORCEMENT OR STRAND SHALL NOT BE DAMAGED UNLESS PRIOR APPROVAL IS GIVEN BY THE ENGINEER.
6. ALTERNATE PRODUCTS MUST BE APPROVED IN WRITING BY THE STRUCTURAL ENGINEER PRIOR TO USE. CONTRACTOR SHALL PROVIDE CALCULATIONS AND PRODUCT DATA SHOWING THAT THE SUBSTITUTED PRODUCT IS IN COMPLIANCE WITH THE RELEVANT BUILDING CODES, LOAD RESISTANCE, INSTALLATION CATEGORY, CREEP, IN-SERVICE TEMPERATURE AND INSTALLATION TEMPERATURE OF THE SPECIFIED PRODUCT.

POST INSTALLED ANCHORS & REBAR

ANCHOR TYPE	PRODUCT	REMARKS
ADHESIVE ANCHORS / REBAR IN CONCRETE	HILTI HIT - HY 200 V3 SIMPSON AT-XP	---
ADHESIVE ANCHORS / REBAR IN CONCRETE W/ > 12" EMBEDMENT	HILTI HIT - RE 500 V3 SIMPSON SET-3G	---
ADHESIVE ANCHORS / REBAR IN GROUT FOR HOLLOW MASONRY	HILTI HIT - HY 270 SIMPSON SET-XP	PROVIDE MANUFACTURER'S RECOMMENDED SCREEN TUBES IN HOLLOW MASONRY
EXPANSION ANCHORS IN CONCRETE	HILTI KWIK BOLT TZ SIMPSON STRONG BOLT 2	---
EXPANSION ANCHORS IN GROUTED MASONRY	HILTI KWIK BOLT 3 SIMPSON STRONG BOLT 2	---
SCREW ANCHORS IN CONCRETE OR GROUTED MASONRY	SIMPSON TITEN HD	---

ANCHOR RODS:

1. SHALL BE ASTM F1554, GR. 36 ROD WITH THREADED ENDS. PROVIDE HOT DIP GALVANIZE FINISH ON ALL ANCHOR BOLTS PERMANENTLY EXPOSED TO EXTERIOR OR IN CONTACT WITH PRESSURE TREATED LUMBER.
2. THREADED ROD EMBEDMENT DEPTH SPECIFIED IN THE DRAWINGS SHALL BE FROM TOP OF CONCRETE TO TOP OF DOUBLE NUT.

SPECIAL INSPECTION AND TESTING:

1. SEE DETAILED INSPECTION AND TESTING REQUIREMENTS AS INDICATED ON SHEET S-002

STRUCTURAL STEEL:

1. STEEL SHALL CONFORM TO ASTM A992 (F_y=50 KSI) FOR ALL W-SHAPES, AND ASTM A36 (F_y=36 KSI) FOR ALL OTHER MISCELLANEOUS SHAPES AND PLATES. STRUCTURAL TUBING SHALL CONFORM TO ASTM A500, GRADE B OR GRADE C (F_y=46 KSI). STRUCTURAL PIPE SHALL CONFORM TO ASTM A53, GRADE B, TYPE "E" OR "S" (F_y=35 KSI).
2. STEEL SHALL CONFORM TO THE LATEST EDITION OF AISC SPECIFICATIONS FOR STRUCTURAL STEEL BUILDINGS.
3. ALL SHOP CONNECTIONS TO BE WELDED (UTILIZING E70XX ELECTRODES) AND FIELD CONNECTIONS TO BE BOLTED, UNLESS OTHERWISE NOTED. STEEL TO RECEIVE ONE SHOP COAT AND ONE FIELD TOUCH UP COAT OF APPROVED PAINT, EXCEPT WHERE GALVANIZED IS INDICATED ON THE DRAWINGS.
4. WELDS FOR ALL EXPOSED STRUCTURAL STEEL SHALL BE GROUND SMOOTH UNLESS NOTED OTHERWISE.
5. ALL BOLTED CONNECTIONS SHALL CONSIST OF 3/4" DIA. (MIN.) ASTM F3125 GRADE F1852 (A325-TC) BOLTS, UNLESS NOTED OTHERWISE.
   A. FAILURE OF A BOLT OR NUT DURING INSTALLATION PROCESS RESULTING IN A CRACK IN THE BOLT OR NUT SHALL BE GROUNDS FOR REJECTION OF ALL THE FAILED BOLTS OR NUTS COMING FROM THE SAME LOT. IF THE DOCUMENTATION OF THE LOT OF ORIGIN FOR THE FAILED NUT(S) OR BOLT(S) DOES NOT EXIST, OR IS NOT PROVIDED, THEN ALL OF THE BOLT(S) OR NUT(S) SHALL BE ASSUMED TO COME FROM THE LOT CONTAINING THE FAILED NUT(S) OR BOLT(S).
6. CONTRACTOR TO FURNISH AND INSTALL 500 LBS. OF ADDITIONAL MISCELLANEOUS STEEL TO BE USED AT ENGINEER'S DISCRETION.
7. CONTRACTOR SHALL MAINTAIN ERECTION TOLERANCES OF STRUCTURAL STEEL AND ARCHITECTURALLY EXPOSED STRUCTURAL STEEL WITHIN AISC'S CODE OF STANDARD PRACTICE FOR STEEL BUILDINGS AND BRIDGES.
8. ANCHOR BOLT HOLES IN STRUCTURAL STEEL SHALL BE OVERSIZED PER THE AISC MANUAL.

SHEAR STUD CONNECTORS:

1. SHEAR STUD CONNECTORS SHALL BE FABRICATED AND INSTALLED IN ACCORDANCE WITH AWS D1.1, "STRUCTURAL WELDING CODE", SECTION 7 - STUD WELDING. STUDS SHALL BE TYPE "B", HEADED STUDS, HAVING A MINIMUM TENSILE STRENGTH OF 65,000 PSI, AND SHALL BE OF LENGTH AND DIAMETER SHOWN ON THE DRAWINGS.

PRE-ENGINEERED METAL BUILDING:

1. THE PRE-ENGINEERED METAL BUILDING SHALL CONSIST OF ALL STRUCTURAL ITEMS INCLUDING ROOF DECK, WALL PANELS, FLOOR FRAMING, FLOOR AND ROOF DECKING, SUPPORT STEEL FRAMING AND ALL ASSOCIATED ITEMS. SEE ARCHITECTURAL AND ELECTRICAL DRAWINGS FOR ADDITIONAL INFORMATION IN PARTICULAR FOR NON-STRUCTURAL ITEMS.
2. THE SYSTEM SHALL BE DESIGNED AND DETAILED BY THE MANUFACTURER TO SUSTAIN THE DESIGN LOADS SPECIFIED. THE DESIGN SHALL BE IN ACCORDANCE TO AISC AND AISI SPECIFICATIONS AND MBMA "METAL BUILDING SYSTEMS MANUAL" DESIGN PRACTICES. LATEST ISSUES.
3. ANCHOR BOLT SPACING REQUIREMENTS:
   A. ALL BOLTS TO BE SPACED NO CLOSER THAN 5" ON CENTER.
   B. ALL ANCHOR BOLTS TO BE SPACED NO CLOSER THAN 5" FROM CENT

IBC 2018 TABLE 1705.3 REQUIRED SPECIAL INSPECTION AND TESTS OF CONCRETE CONSTRUCTION

TYPE	CONTINUOUS SPECIAL INSPECTION	PERIODIC SPECIAL INSPECTION	REFERENCED STANDARD[a]	IBC REFERENCE	REQUIRED ON PROJECT
1. INSPECTION REINFORCEMENT, INCLUDING PRESTRESSING TENDONS, AND VERIFY PLACEMENT	-	X	ACI 318 CH 20, 25.2, 25.3, 26.6.1-26.6.3	1908.4	YES
2. REINFORCING BAR WELDING:					
A. VERIFY WELDABILITY OF REINFORCING BARS OTHER THAN ASTM A706.	-	X	AWS D1.4, ACI 318: 26.6.4	-	YES
B. INSPECT SINGLE-PASS FILLET WELDS, MAXIMUM 5/16".		X			
C. INSPECT ALL OTHER WELDS	X	-			
3. INSPECT ANCHORS CAST IN CONCRETE.	-	X	ACI 318: 17.8.2	-	YES
4. INSPECT ANCHORS POST-INSTALLED IN HARDENED CONCRETE MEMBERS.[b] A. ADHESIVE ANCHORS INSTALLED IN HORIZONTALLY OR UPWARDLLY INCLINED ORIENTATIONS TO RESIST SUSTAINED TENSION LOADS.	X	-	ACI 318: 17.8.2.4, ACI 318: 17.8.2	-	NO
B. MECHANICAL ANCHORS AND ADHESIVE ANCHORS NOT DEFINED IN 4A.	-	X			YES
5. VERIFY USE OF REQUIRED DESIGN MIX.	-	X	ACI 318: CH. 19, 26.4.3, 26.4.4	1904.1, 1904.2, 1908.2, 1908.3	YES
6. PRIOR TO CONCRETE PLACEMENT, FABRICATE SPECIMENS FOR STRENGTH TESTS, PERFORM SLUMP AND AIR CONTENT TESTS, AND DETERMINE THE TEMPERATURE OF THE CONCRETE.	X	-	ASTM C172, ASTM C31, ACI 318: 26.5, 26.12	1908.10	YES
7. INSPECT CONCRETE AND SHOTCRETE PLACEMENT FOR PROPER APPLICATION TECHNIQUES	X	-	ACI 318: 26.5	1908.6, 1908.7, 1908.8	NO
8. VERIFY MAINTENANCE OF SPECIFIED CURING TEMPERATURE AND TECHNIQUES.	-	X	ACI 318: 26.5.3-26.5.5	1908.9	YES
9. INSPECT OF PRESTRESSED CONCRETE FOR: A. APPLICATION OF PRESTRESSING FORCES.	X	-	ACI 318: 26.10	-	NO
B. GROUTING OF BONDED PRESTRESSING TENDONS.	X	-			
10. INSPECT ERECTION OF PRECAST CONCRETE MEMBERS.	-	X	ACI 318: CH. 26.9	-	NO
11. VERIFY IN-SITU CONCRETE STRENGTH, PRIOR TO STRESSING OF TENDONS IN POST-TENSIONED CONCRETE AND PRIOR TO REMOVAL OF SHORES ANDFORMS FROM BEAMS AND STRUCTURAL SLABS.	-	X	ACI 318: 26.11.2	-	NO
12. INSPECT FORMWORK FOR SHAPE, LOCATION AND DIMENSIONS OF THE CONCRETE MEMBER BEING FORMED.	-	X	ACI 318: 26.11.1.2(b)	-	YES

a. WHERE APPLICABLE, SEE SECTION 1705.12, SPECIAL INSPECTIONS FOR SEISMIC RESISTANCE.

b. SPECIFIC REQUIREMENTS FOR SPECIAL INSPECTION SHALL BE INCLUDED IN THE RESEARCH REPORT FOR THE ANCHOR ISSEUD BY AN APPROVED SOURCE IN ACCORDANCE WITH 17.8.2 IN ACI 318, OR OTHER QUALIFICATION PROCEDURES. WHERE SPECIFIC REQUIREMENTS ARE NOT PROVIDED, SPECIAL INSPECTION REQUIREMENTS SHALL BE SPECIFIED BY THE REGISTERED DESIGN PROFESSIONAL AND SHALL BE APPROVED BY THE BUILDING OFFICIAL PRIOR TO THE COMMENCEMENT OF THE WORK.

WELDING OF REINFORCING BARS.
SPECIAL INSPECTIONS OF WELDING AND QUALIFICATIONS OF SPECIAL INSPECTORS FOR REINFORCING BARS SHALL BE IN ACCORDANCE WITH THE REQUIREMENTS OF AWS D1.4 FOR SPECIAL INSPECTION AND AWS D1.4 FOR SPECIAL INSPECTOR QUALIFICATION.

MATERIAL TESTS.
IN THE ABSENCE OF SUFFICIENT DATA OR DOCUMENTATION PROVIDING EVIDENCE OF CONFORMANCE TO QUALITY STANDARDS FOR MATERIALS IN CHAPTERS 19 AND 20 OF ACI 318, THE BUILDING OFFICIAL SHALL REQUIRE TESTING OF MATERIALS IN ACCORDANCE WITH THE APPROPRIATE STANDARDS AND CRITERIA FOR THE MATERIAL IN CHAPTERS 19 AND 20 OF ACI 318.

IBC 2018 TABLE 1705.6 REQUIRED VERIFICATION AND INSPECTION OF SOILS

VERIFICATION AND INSPECTION TASKS	FREQUENCY OF INSPECTION: CONTINUOUS SPECIAL INSPECTION	FREQUENCY OF INSPECTION: PERIODIC SPECIAL INSPECTION	REQUIRED ON PROJECT
1. VERIFY MATERIALS BELOW SHALLOW FOUNDATIONS ARE ADEQUATE TO ACHIEVE THE DESIGN BEARING CAPACITY.	-	X	YES
2. VERIFY EXCAVATIONS ARE EXTENDED TO PROPER DEPTH AND HAVE REACHED PROPER MATERIAL.	-	X	YES
3. PERFORM CLASSIFICATION AND TESTING OF COMPACTED FILL MATERIALS.	-	X	YES
4. VERIFY USE OF PROPER MATERIALS, DENSITIES AND LIFT THICKNESSES DURING PLACEMENT AND COMPACTION OF COMPACTED FILL.	X	-	YES
5. PRIOR TO PLACEMENT OF COMPACTED FILL, INSPECT SUBGRADE AND VERIFY THAT SITE HAS BEEN PREPARED PROPERLY.	-	X	YES

IBC 2018 1705.9 HELICAL PILE FOUNDATIONS

1. INSPECTIONS SHALL BE PERFORMED CONTINUOUSLY DURING INSTALLATION OF HELICAL PILE FOUNDATIONS.
2. INFORMATION RECORDED SHALL INCLUDE INSTALLATION EQUIPMENT USED, PILE DIMENSIONS, TIP ELEVATIONS, FINAL DEPTH, FINAL INSTALLATION TORQUE AND OTHER PERTINENT INSTALLATION DATA AS REQUIRED BY THE REGISTERED DESIGN PROFESSIONAL IN RESPONSIBLE CHARGE.

STEEL CONSTRUCTION

TABLE N5.4-1 INSPECTION TASKS PRIOR TO WELDING

INSPECTION TASKS PRIOR TO WELDING	INSPECTION INTERVAL	REQUIRED ON PROJECT
WELDER QUALIFICATION RECORDS AND CONTINUITY RECORDS	P	YES
WELDING PROCEDURE SPECIFICATIONS (WPSs) AVAILABLE	P	YES
MANUFACTURER CERTIFICATIONS FOR WELDING CONSUMABLES AVAILABLE	P	YES
MATERIAL IDENTIFICATION (TYPE/GRADE)	O	YES
WELDER IDENTIFICATION SYSTEM[a]	O	YES
FIT-UP OF GROOVE WELDS (INCLUDING JOINT GEOMETRY) • JOINT PREPARATION • DIMENSIONS (ALIGNMENT, ROOT OPENING, ROOT FACE, BEVEL) • CLEANLINESS (CONDITION OF STEEL SURFACES) • TACKING (TACK WELD QUALITY AND LOCATION)	O	YES
FIT-UP OF CJP GROOVE WELDS OF HSS T-, Y- AND K-JOINTS WITHOUT BACKING • JOINT PREPARATIONS • DIMENSIONS (ALIGNMENT, ROOT OPENING, ROOT FACE, BEVEL) • CLEANLINESS (CONDITION OF STEEL SURFACES) • TACKING (TACK WELD QUALITY AND LOCATION)	P	YES
CONFIGURATION AND FINISH OF ACCESS HOLES	O	YES
FIT-UP OF FILLET WELDS • DIMENSIONS (ALIGNMENT, GAPS AT ROOT) • CLEANLINESS (CONDITION OF STEEL SURFACES) • TACKING (TACK WELD QUALITY AND LOCATION)	O	YES
CHECK WELDING EQUIPMENT	O	-

[a] THE FABRICATOR OR ERECTOR, AS APPLICABLE, SHALL MAINTAIN A SYSTEM BY WHICH A WELDER WHO HAS WELDED A JOINT OR MEMBER CAN BE IDENTIFIED. STAMPS, IF USED, SHALL BE THE LOW-STRESS TYPE.

TABLE N5.4-2 INSPECTION TASKS DURING WELDING

INSPECTION TASKS DURING WELDING	INSPECTION INTERVAL	REQUIRED ON PROJECT
USE OF QUALIFIED WELDERS	O	YES
CONTROL AND HANDLING OF WELDING CONSUMABLES • PACKAGING • EXPOSURE CONTROL	O	YES
NO WELDING OVER CRACKED TACK WELDS	O	YES
ENVIRONMENTAL CONDITIONS • WIND SPEED WITHIN LIMITS • PRECIPITATION AND TEMPERATURE	O	YES
WPS FOLLOWED • SETTINGS ON WELDING EQUIPMENT • TRAVEL SPEED • SELECTED WELDING MATERIALS • SHIELDING GAS TYPE/FLOW RATE • PREHEAT APPLIED • INTERPASS TEMPERATURE MAINTAINED (MIN/MAX) • PROPER POSITION (F, V, H, OH)	O	YES
WELDING TECHNIQUES • INTERPASS AND FINAL CLEANING • EACH PASS WITHIN PROFILE LIMITATIONS • EACH PASS MEETS QUALITY REQUIREMENTS	O	YES
PLACEMENT AND INSTALLATION OF STEEL HEADED STUD ANCHORS	P	YES

AISC 360-16 TABLE N5.4-3 INSPECTION TASKS AFTER WELDING

INSPECTION TASKS AFTER WELDING	INSPECTION INTERVAL	REQUIRED ON PROJECT
WELDS CLEANED	O	YES
SIZE, LENGTH AND LOCATION OF WELDS	P	YES
WELDS MEET VISUAL ACCEPTANCE CRITERIA: • CRACK PROHIBITION • WELD/BASE-METAL FUSION • CRATER CROSS SECTION • WELD PROFILES • WELD SIZE • UNDERCUT • POROSITY	P	YES
ARC STRIKES	P	YES
k-AREA[a]	P	YES
WELD ACCESS HOLES IN ROLLED HEAVY SHAPES AND BUILT-UP HEAVY SHAPES[b]	P	YES
BACKING REMOVED AND WELD TABS REMOVED (IF REQUIRED)	P	YES
REPAIR ACTIVITIES	O	YES
DOCUMENT ACCEPTANCE OR REJECTION OF WELDED JOINT OR MEMBER	O	YES
NO PROHIBITED WELDS HAVE BEEN ADDED WITHOUT THE APPROVAL OF THE EOR	O	YES

[a] WHEN WELDING OF DOUBLE PLATES, CONTINUITY PLATES OR STIFFENERS HAS BEEN PERFORMED IN THE k-AREA, VISUALLY INSPECT THE WEB k-AREA FOR CRACKS WITHIN 3" (75 mm) OF THE WELD.

(b) AFTER ROLLED HEAVY SHAPES (SEE SECTION A3.1c) AND BUILT-UP HEAVY SHAPES (SEE SECTION A3.1d) ARE WELDED, VISUALLY INSPECT THE WELD ACCESS HOLE FOR CRACKS.

- O-OBSERVE THESE ITEMS ON A RANDOM BASIS. OPERATIONS NEED NOT BE DELAYED PENDING THESE INSPECTIONS. P-PERFORM THESE TASKS FOR EACH WELDED JOINT OR MEMBER.
- OBSERVATION OF WELDING OPERATIONS AND VISUAL INSPECTION OF IN-PROCESS AND COMPLETED WELDS SHALL BE THE PRIMARY METHOD TO CONFIRM THAT THE MATERIALS, PROCEDURES AND WORKMANSHIP ARE IN CONFORMANCE WITH THE CONSTRUCTION DOCUMENTS.
- ALL NONDESTRUCTIVE TESTING OF WELDED JOINTS SHALL BE DOCUMENTED.
- SEE AISC360-16 CHAPTER N FOR ADDITIONAL WELD INSPECTION REQUIREMENTS.
- SEE AISC360-16 CHAPTER N FOR ADDITIONAL BOLT INSPECTION REQUIREMENTS.
- EXPOSED CUT SURFACES OF GALVANIZED STRUCTURAL STEEL MAIN MEMBERS AND EXPOSED CORNERS OF RECTANGULAR HSS SHALL BE VISUALLY INSPECTED FOR CRACKS SUBSEQUENT TO GALVANIZING.
- INSPECTION SHALL OCCUR DURING THE PLACEMENT OF ANCHOR RODS AND OTHER EMBEDMENTS SUPPORTING STRUCTURAL STEEL FOR COMPLIANCE WITH THE CONSTRUCTION DOCUMENTS, INCLUDING DIAMETER, GRADE, TYPE AND LENGTH OF THE ANCHOR ROD OR EMBEDDED ITEM, AND THE EXTENT OR DEPTH OF EMBEDMENT INTO THE CONCRETE.
- FABRICATED STEEL AND ERECTED STEEL FRAMES, AS APPROPRIATE, SHALL BE INSPECTED FOR COMPLIANCE WITH THE DETAILS SHOWN ON THE CONSTRUCTION DOCUMENTS, INCLUDING BRACES, STIFFENERS, MEMBER LOCATIONS AND PROPER JOINT DETAIL APPLICATION.

NO.	DESCRIPTION	DATE
01	BID - PEMIIT SET	05/09/2025

C:\Users\jeffb\Documents\24-238-S-MODEL R-23_JeffBSSSK.rvt

CONSULTANTS

CIVIL:
FMG ENGINEERING
FMG ENGINEERING
3700 STURGIS RD
RAPID CITY, SD 57702-0317
Phone: 605-342-4105
ALEX FISHER

STRUCTURAL:
Albertson Engineering Inc.
ALBERTSON ENGINEERING INC.
3202 W MAIN ST SUITE C
RAPID CITY, SD 57702
Phone: 605-343-9606

MEP:
WPE WEST PLAINS ENGINEERING, INC
WEST PLAINS ENGINEERING, INC.
1750 RAND RD
RAPID CITY, SD 57702
Phone: 605-348-7455
DAREN BECKLOFF

DESIGNER OF RECORD
A/E:
STONE GROUP ARCHITECTS

STAMP
REGISTERED PROFESSIONAL ENGINEER
REG. NO. 6192
MICHAEL D. ALBERTSON
NORTH DAKOTA
05-09-25

Office of Construction and Facilities Management
VA U.S. Department of Veterans Affairs

Drawing Title	IBC INSPECTION TABLES
Phase	BID - PERMIT SET
Project Title	HOT SPRINGS ELECTRICAL UPGRADE
Project Number	VA #VA #563A4-24-202 SGA #AEI #24-238
Building Number	10, 12 & 64
Approved	DOUG SPRINKLE
	FULLY SPRINKLERED
Location	HOT SPRINGS, SD 47747
Issue Date	5.9.2025
Checked	MDA
Drawn	JAB
Drawing Number	S-002

VA FORM 08 - 6231

CONCRETE FINISH SCHEDULE

UNLESS SPECIFICALLY NOTED OTHERWISE, THE FOLLOWING REQUIREMENTS APPLY TO ALL CAST-IN-PLACE AND PRECAST CONCRETE

ITEM	BASE CONCRETE SURFACE CATEGORY	MODIFICATIONS TO DEFAULT REQUIREMENTS	REMARKS
DRILLED PIERS	N/A	NONE	NONE
FOOTINGS	CSC1	NONE	NONE
FOUNDATION WALLS WITHOUT ANY PORTION VISIBLE	CSC1	NONE	NONE
FOUNDATION WALLS WITH PORTIONS VISIBLE	CSC2	NONE	NONE
BASEMENT WALLS	CSC2	NONE	NONE
PRECAST ITEMS	CSC3	TEXTURE - T4 COLOR UNIFORMITY - CU4	SPECIALIZED FINISHES SUCH AS EXPOSED AGGREGATE NOT SUBJECT TO SURFACE VOID RATIO LIMITS
CONCRETE EXPOSED IN UTILITARIAN AREAS SUCH AS MECHANICAL ROOMS OR JANITOR CLOSETS	CSC2	NONE	NONE
ALL OTHER EXPOSED CONCRETE	CSC3	NONE	NONE
ALL OTHER CONCRETE NOT EXPOSED	CSC2	NONE	NONE

ADDITIONAL REMARKS:

SEE TABLE 1 - DESCRIPTION OF FORMED CONCRETE SURFACE CATEGORIES, TABLE 3.1B, TABLE 3.1C, AND 3.1D FOR ADDITIONAL SPECIFIC REQUIREMENTS.

SPECIALIZED FINISHES INCLUDE EXPOSED AGGRESGATE, SANDBLAST FINISHES, ACID WASHES, COLORED CONCRETE, AND OTHER SIMILAR ITEMS. SPECIALIZED FINISHES MUST HAVE MOCK UP PANEL CONSTRUCTED AND SUBMITTED FOR APPROVAL OF ARCHITECT. APPROVED MOCK UP PANEL TO BE USED AS A BASIS FOR THE ACCEPTABILITY OF THE FINISHES. ARCHITECT SHALL BE THE SOLE JUDGE IN DETERMINING THE ACCEPTABILITY OF SPECIALIZED FINISHES.

TOLERANCES SHALL BE MEASURED AT INITIAL CONSTRUCTION INSTALLATION PRIOR TO ANY REPAIRS. ANY REPAIR WORK MUST BE SUBMITTED TO THE ARCHITECT AND ENGINEER. ACCEPTANCE OF REPAIRS WILL BE AT THE DISCRETION OF THE ARCHITECT OR ENGINEER.

TOLERANCES SPECIFIED IN ACI 117, ACI 301 AND THE PCI MANUAL SHALL STILL APPLY TO ALL CONCRETE SURFACES IN THIS PROJECT, BUT IN AREAS OF CONFLICT, THESE TABLES SHALL BE USED AS A REFERENCE AND GUIDE.

TABLE 3.1C - FORM-FACING CATEGORIES

CRITERION	FORM-FACING CATEGORY		
	FC1	FC2	FC3
HOLES, GREATER THAN 3/16 IN.	PLUG OR DISK COVERS ARE ACCEPTABLE	ACCEPTABLE IF PATCHED, SANDED AND SEALED OR GROUNDED TO MATCH ADJACENT FORM SURFACE	VISIBLE FILLING IS UNACCEPTABLE
HOLES, 3/16 IN. OR LESS	ACCEPTABLE	ACCEPTABLE WITHOUT PATCHING, PROVIDED FORM SURFACE IS NOT DAMAGED OR TORN AROUND HOLE(S)	ACCEPTABLE IF PATCHED, SANDED AND SEALED OR GROUNDED TO MATCH ADJACENT FORM SURFACE
VIBRATOR BURNS	ACCEPTABLE	UNACCEPTABLE	UNACCEPTABLE
SCRATCHES / DENTS	ACCEPTABLE	ACCEPTABLE IF PATCHED, SANDED AND SEALED OR GROUNDED TO MATCH ADJACENT FORM SURFACE	UNACCEPTABLE UNLESS OTHERWISE APPROVED
CONCRETE REMNANTS [a]	ACCEPTABLE	UNACCEPTABLE	UNACCEPTABLE
CEMENT RESIDUE [b]	ACCEPTABLE	ACCEPTABLE	SHOULD NOT AFFECT FINISHED CONCRETE SURFACE
SWELLING OF FACING AT FASTENER OR TIE HOLES	ACCEPTABLE	UNACCEPTABLE	UNACCEPTABLE
PATCHING [c]	ACCEPTABLE	ACCEPTABLE	SHOULD NOT AFFECT FINISHED CONCRETE SURFACE

ADDITIONAL REMARKS:

a. CONCRETE REMNANT IS HARDENED CONCRETE ON THE FORM FACE.

b. CEMENT RESIDUE IS A THIN FILM REMAINING ON THE FORM FACE.

c. PERFORM AND INSPECT REPAIRS OF FORM FACING AND MAKE ACCEPTABLE FOR THE INTENDED FORMED CONCRETE SURFACE.

TABLE 3.1D - CONCRETE SURFACE VOID RATIO (SVR) ON AS-CAST FORMED SURFACES

SURFACE VOID RATIO	SVR1	SVR2	SVR3	SVR4
VOID AREA OF PORES OF SURFACE OCCURRING WITHIN A 24 IN. x 24 IN. SQUARE	6.9 IN.^{2}, Dmax = 3/4 IN.	5.8 IN.^{2}, Dmax = 5/8 IN.	3.5 IN.^{2}, Dmax = 3/8 IN.	1.7 IN.^{2}, Dmax = 1/4 IN.

ADDITIONAL REMARKS:

* VOID AREA IS THE SUMMATION OF THE AREAS OF ALL VOIDS WITHIN THE SAMPLE SPACE OF 24 IN. x 24 IN. VOIDS WITH AN AVERAGE DIAMETER OF d < 3/32 IN. ARE EXCLUDED FROM THE CALCULATION OF THE VOID AREA.

Dmax IS MAXIMUM DIMENSION OF ANY VOID IN ANY DIRECTION.

TABLE 3.1B - DESCRIPTION OF VISIBLE EFFECTS ON AS-CAST FORMED SURFACE

CRITERION	CLASSIFICATION	CHARACTERISTICS
TEXTURE PANEL-JOINT	T1	- ACCEPTABLE GAPS IN ADJACENT FORMWORK COMPONENTS ≤ 3/4 IN. - ACCEPTABLE DEPTH OF MORTAR LOSS ≤ 1/2 IN. - ACCEPTABLE SURFACE OFFSETS OF PANEL JOINTS UP TO 1 IN. (ACI 117-10, SECTION 4.8.3, CLASS D). - ALLOWABLE PROJECTIONS 1 IN. FROM ADJACENT SURFACE. (ACI 301-16, SECTION 5.3.3.3.a). - FORM-FACING MATERIAL EXAMPLES: ROUGH SAWN LUMBER, CDX PLYWOOD, AND PARTICLE BOARD. - IMPRINTS OF MODULAR PANEL FRAMES ARE ACCEPTABLE.
	T2	- ACCEPTABLE GAPS IN ADJACENT FORMWORK COMPONENTS ≤ 1/2 IN. - ACCEPTABLE DEPTH OF MORTAR LOSS ≤ 3/8 IN. - ACCEPTABLE SURFACE OFFSETS OF PANEL JOINTS UP TO 1/2 IN. (ACI 117-10, SECTION 4.8.3, CLASS C). - ALLOWABLE PROJECTIONS 1/2 IN. FROM ADJACENT SURFACE. - FORM-FACING MATERIAL EXAMPLES: CLASS B/BOES PLYWOOD, MDO PLYWOOD. - IMPRINTS OF MODULAR PANEL FRAMES ARE ACCEPTABLE.
	T3	- ACCEPTABLE GAPS IN ADJACENT FORMWORK COMPONENTS ≤ 1/4 IN. - ACCEPTABLE DEPTH OF MORTAR LOSS ≤ 1/4 IN. - ACCEPTABLE SURFACE OFFSETS OF PANEL JOINTS UP TO 1/4 IN. (ACI 117-10, SECTION 4.8.3, CLASS B). - ALLOWABLE PROJECTIONS 1/4 IN. FROM ADJACENT SURFACE. (ACI 301-16, SECTION 5.3.3.3.b). - FORM-FACING MATERIAL EXAMPLES: HDO PLYWOOD, PHENOLIC SURFACE FILM, PLASTIC OR STEEL. - IMPRINTS OF MODULAR PANEL FRAMES ARE ACCEPTABLE.
	T4	- FORMWORK SHOULD BE GROUT TIGHT. AVOID GROUT / MORTAR LEAKAGE AND CORRECT WHERE OCCURS. - PERMISSIBLE SURFACE OFFSETS OF PANEL JOINTS UP TO 1/8 IN. (ACI 117-10, SECTION 4.8.3, CLASS A). - ALLOWABLE PROJECTIONS 1/8 IN. FROM ADJACENT SURFACE. (ACI 301-16, SECTION 5.3.3.3.C). - FORM-FACING MATERIAL EXAMPLES: HDO PLYWOOD, PSF PLYWOOD, FULL PLASTIC, STEEL AND FIBERGLASS. - IMPRINTS OF MODULAR PANEL FRAMES ARE UNACCEPTABLE UNLESS DEMONSTRATED AND APPROVED IN THE MOCKUP.
SURFACE VOID RATIO (SVR)	SVR1-SVR4	- REFER TO TABLE 3.1D.
COLOR UNIFORMITY	CU1	- LIGHT AND DARK COLOR VARIATIONS ARE ACCEPTABLE. - COLOR VARIATIONS BETWEEN ADJACENT PLACEMENTS AND LAYER LINES ARE ACCEPTABLE. - RUST AND DIRT STAINS ARE ACCEPTABLE.
	CU2	- GRADUAL LIGHT AND DARK COLOR VARIATIONS ARE ACCEPTABLE. - COLOR CONSISTENCY BETWEEN ADJACENT PLACEMENTS AND LAYER LINES SHOULD BE MOSTLY UNIFORM. - MAXIMUM TONAL VARIATION FOR CONCRETE SHALL BE CONTAINED WITHIN 3 TONAL RANGES (FOR EXAMPLE LIGHTEST BEING 2.0 AND DARKEST BEING 4.0). - CONCRETE SOURCE MATERIALS AND FORM-FACING MATERIAL SHOULD BE CONSISTENT TYPE, GRADE, AND SOURCE TO AVOID CAUSING DEVIATIONS IN APPEARANCE. - RUST AND DIRT STAINS ARE ACCEPTABLE.
	CU3	- DISCOLORATIONS CAUSED BY CONCRETE SOURCE MATERIAL OF DIFFERENT TYPE AND ORIGIN, DIFFERENT TYPES OF FACING MATERIALS, OR INCONSISTENT TREATMENT OF CONCRETE SURFACES ARE UNACCEPTABLE. - MAXIMUM TONAL VARIATION FOR CONCRETE SHALL BE CONTAINED WITHIN 2 TONAL RANGES (FOR EXAMPLE LIGHTEST BEING 2.0 AND DARKEST BEING 3.0). - RUST STAINS, DIRT STAINS AND VISIBLE POURING LAYERS ARE UNACCEPTABLE.
	CU4	- DISCOLORATIONS CAUSED BY CONCRETE SOURCE MATERIAL OF DIFFERENT TYPE AND ORIGIN, DIFFERENT TYPES OF FACING MATERIALS, OR INCONSISTENT TREATMENT OF CONCRETE SURFACES ARE UNACCEPTABLE. - MAXIMUM TONAL VARIATION FOR CONCRETE SHALL BE CONTAINED WITHIN 1 TONAL RANGE (FOR EXAMPLE LIGHTEST BEING 2.0 AND DARKEST BEING 2.5 OR LIGHTEST BEING 1.5 AND DARKEST BEING 2.0). - RUST STAINS, DIRT STAINS AND VISIBLE POURING LAYERS ARE UNACCEPTABLE.
SURFACE IRREGULARITIES [a]	SI1	- ACI 117-10, SECTION 4.8.3, CLASS D - SURFACE. - MAXIMUM GRADUAL DEVIATION OVER A DISTANCE OF 5 FT. OR ABRUPT DEVIATION IS 1 IN. - LIMIT DEFLECTION OF FORMWORK STRUCTURE TO L/240. - ACI 117-10, SECTION 4.8.2 DOES NOT APPLY.
	SI2	- ACI 117-10, SECTION 4.8.3, CLASS C - SURFACE. - MAXIMUM GRADUAL DEVIATION OVER A DISTANCE OF 5 FT. OR ABRUPT DEVIATION IS 1/2 IN. - LIMIT DEFLECTION OF FORMWORK STRUCTURE TO L/360. - ACI 117-10, SECTION 4.8.2 DOES NOT APPLY.
	SI3	- ACI 117-10, SECTION 4.8.3, CLASS B - SURFACE. - MAXIMUM GRADUAL DEVIATION OVER A DISTANCE OF 5 FT. OR ABRUPT DEVIATION IS 1/4 IN. - LIMIT DEFLECTION OF FORMWORK STRUCTURE TO L/360. - ACI 117-10, SECTION 4.8.2 DOES NOT APPLY.
	SI4	- ACI 117-10, SECTION 4.8.3, CLASS A - SURFACE. - MAXIMUM GRADUAL DEVIATION OVER A DISTANCE OF 5 FT. OR ABRUPT DEVIATION IS 1/8 IN. - LIMIT DEFLECTION OF FORMWORK STRUCTURE TO L/400. - ACI 117-10, SECTION 4.8.2 DOES APPLY.
CONSTRUCTION AND FACING JOINTS [b]	CJ1	- ACCEPTABLE OFFSET OF SURFACES BETWEEN TWO ADJACENT PLACEMENTS ≤ 1 IN.
	CJ2	- ACCEPTABLE OFFSET OF SURFACES BETWEEN TWO ADJACENT PLACEMENTS ≤ 1/2 IN. - THE USE OF CHAMFER STRIPS OR SIMILAR REVEALS ARE RECOMMENDED AT CONSTRUCTION JOINTS.
	CJ3	- ACCEPTABLE OFFSET OF SURFACES BETWEEN TWO ADJACENT PLACEMENTS ≤ 1/4 IN. - THE USE OF CHAMFER STRIPS OR SIMILAR REVEALS ARE RECOMMENDED AT CONSTRUCTION JOINTS. - CONSTRUCTION JOINT LOCATIONS SHOULD BE COORDINATED WITH ARCHITECTURAL DESIGN
	CJ4	- ACCEPTABLE OFFSET OF SURFACES BETWEEN TWO ADJACENT PLACEMENTS ≤ 1/8 IN. OFFSETS LESS THAN 1/8 IN. SHOULD BE SPECIFIED IN DESIGN DOCUMENTS. - THE USE OF CHAMFER STRIPS OR SIMILAR REVEALS ARE RECOMMENDED AT CONSTRUCTION JOINTS. - CONSTRUCTION JOINT LOCATIONS SHOULD BE COORDINATED WITH ARCHITECTURAL DESIGN AND APPROVED BY ARCHITECT OR ENGINEER. - THE MOCKUP SHOULD CONTAIN ALL FEATURES REPRESENTATIVE TO THE FINISHED PRODUCT.

ADDITIONAL REMARKS:

a. SURFACE IRREGULARITIES DO NOT APPLY FOR WORKED OR TEXTURED AREAS.

b. CONSTRUCTION JOINTS THAT REMAIN VISIBLE. LIMITS ALSO APPLY TO VERTICAL OFFSET OF FORMWORK, REVEALS, FINISH LIMITS, ETC.

DESCRIPTION OF FORMED CONCRETE SURFACE CATEGORIES (CSC)

FORMED CONCRETE SURFACE CATEGORY		COMMON APPLICATION	TEXTURE [a]	SURFACE VOID RATIO [b]	COLOR UNIFORMITY [c]	SURFACE IRREGU-LARITIES [d]	CONSTRUCTION AND FACING JOINT [d]	MOCKUP	FORM-FACING CATEGORY [e]
CONCRETE SURFACE FINISH WITH	CSC1	CONCRETE SURFACES IN AREAS WITH NO VISIBILITY OR OF LIMITED IMPORTANCE WITH REGARD TO FORMED CONCRETE SURFACE REQUIREMENTS, OR COVERED WITH SUBSEQUENT FINISH MATERIALS CAPABLE OF ACCOMMODATING THE TOLERANCES OF THIS CATEGORY	T1	SVR1	CU1	SI1	CJ1	OPTIONAL	FC1
	CSC2	CONCRETE SURFACES WHERE VISUAL APPEARANCE IS EXPOSED BUT NOT TO PUBLIC VIEW OR OTHERWISE SPECIFIED	T2	SVR2	CU2	SI2	CJ2	OPTIONAL	FC1
	CSC3	CONCRETE SURFACES THAT ARE IN PUBLIC VIEW OR WHERE APPEARANCE IS IMPORTANT, SUCH AS EXTERIOR OR INTERIOR EXPOSED BUILDING ELEMENTS.	T3	SVR3	CU3	SI3	CJ3	REQUIRED	FC2
	CSC4	CONCRETE SURFACES WHERE THE EXPOSED CONCRETE IS A PROMINENT FEATURE OF THE COMPLETED STRUCTURE OR VISUAL APPEARANCE IS IMPORTANT.	T4	SVR4	CU4	SI4	CJ4	REQUIRED	FC3

ADDITIONAL REMARKS:

a. THESE REQUIREMENTS/ FEATURES ARE DESCRIBED IN DETAIL IN TABLE 3.1B

b. VOID AREA OF PORES SURFACE. REFER TO TABLE 3.1D

c. DISCOLORATIONS CAN USUALLY BE SEEN ONLY AFTER A LONGER PERIOD OF TIME AND FOR AT LEAST 8 WEEKS.

d. REFER TO TABLE 3.1B.

e. REFER TO TABLE 3.1C.

UNLESS OTHERWISE SPECIFIED, THE REQUIREMENTS GIVEN APPLY TO CAST-IN-PLACE AND PRECAST CONCRETE, REQUIREMENTS APPLY TO ALL CAST-IN-PLACE CONCRETE WITH EXCEPTION OF SLABS ON GRADE AND TOP SURFACE OF STRUCTURAL CAST-IN-PLACE SLABS. REQUIREMENTS APPLY TO ALL FACES OF PRECAST CONCRETE INCLUDING SURFACES THAT MAY NOT BE FORMED.

SPECIALIZED FINISHES, AND THE MEANS AND METHODS USED TO OBTAIN THOSE SURFACES, SHALL NOT AFFECT ANY SURFACES EXCEPT FOR THE SPECIFIC SURFACES SPECIFIED. EXAMPLES OF UNACCEPTABLE ACTIONS INCLUDE, BUT ARE NOT LIMITED TO, CHEMICAL TREATMENTS (RETARDERS, ACIDS, ETC) AFFECTING SURFACES NOT INTENDED TO RECEIVE SUCH TREATMENTS.

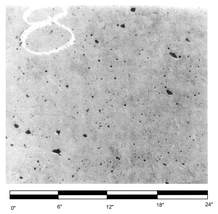

24" x 24" CONCRETE SURFACE VOID RATIO - MAX VOID RATIO FOR SVR1

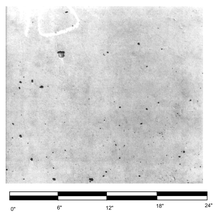

24" x 24" CONCRETE SURFACE VOID RATIO - MAX VOID RATIO FOR SVR2

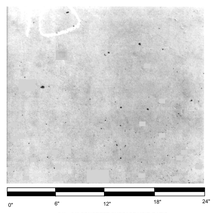

24" x 24" CONCRETE SURFACE VOID RATIO - MAX VOID RATIO FOR SVR3

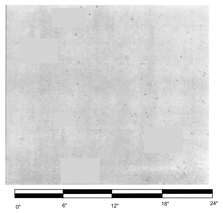

24" x 24" CONCRETE SURFACE VOID RATIO - MAX VOID RATIO FOR SVR4

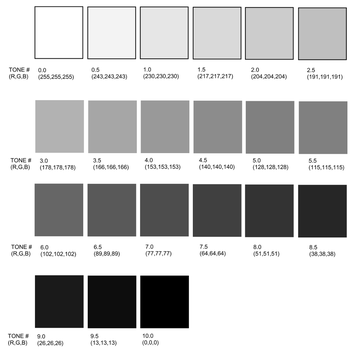

NO.	DESCRIPTION	DATE
01	BID - PEMIIT SET	05/09/2025

CONSULTANTS

CIVIL:
FMG ENGINEERING
FMG ENGINEERING
3700 STURGIS RD
RAPID CITY, SD 57702-0317
Phone: 605-342-4105
ALEX FISHER

STRUCTURAL:
Albertson Engineering Inc.
ALBERTSON ENGINEERING INC.
3202 W MAIN ST SUITE C
RAPID CITY, SD 57702
Phone: 605-343-9606

MEP:
WPE WEST PLAINS ENGINEERING, INC.
WEST PLAINS ENGINEERING, INC.
1750 RAND RD
RAPID CITY, SD 57702
Phone: 605-348-7455
DAREN BECKLOFF

DESIGNER OF RECORD

A/E:
STONE GROUP ARCHITECTS

STAMP

REGISTERED PROFESSIONAL ENGINEER
REG. NO. 6192
MICHAEL D. ALBERTSON
SOUTH DAKOTA
05-09-25

Office of Construction and Facilities Management

VA | U.S. Department of Veterans Affairs

Drawing Title	CONCRETE SURFACE REQUIREMENTS
Phase	BID - PERMIT SET
Project Title	HOT SPRINGS ELECTRICAL UPGRADE
Project Number	VA #VA #568A4-24-202 SGA #AEI #24-238
Building Number	10, 12 & 64
Approved	DOUG SPRINKLE
	FULLY SPRINKLERED
Location	HOT SPRINGS, SD 47747
Issue Date	5.9.2025
Checked	MDA
Drawn	JAB
Drawing Number	S-003

C:\Users\jeffb\Documents\24-238 S-MODEL R-23_wf85553K.rvt

VA FORM 08 - 6231

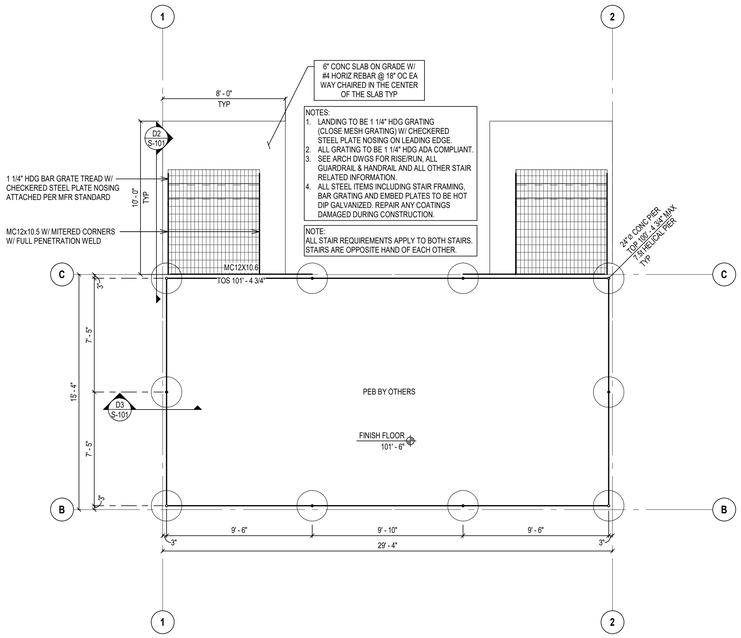

B1 S-101

FND & STAIR FRAMING PLAN

SCALE: 1/4" = 1'-0" REFERENCED FROM:

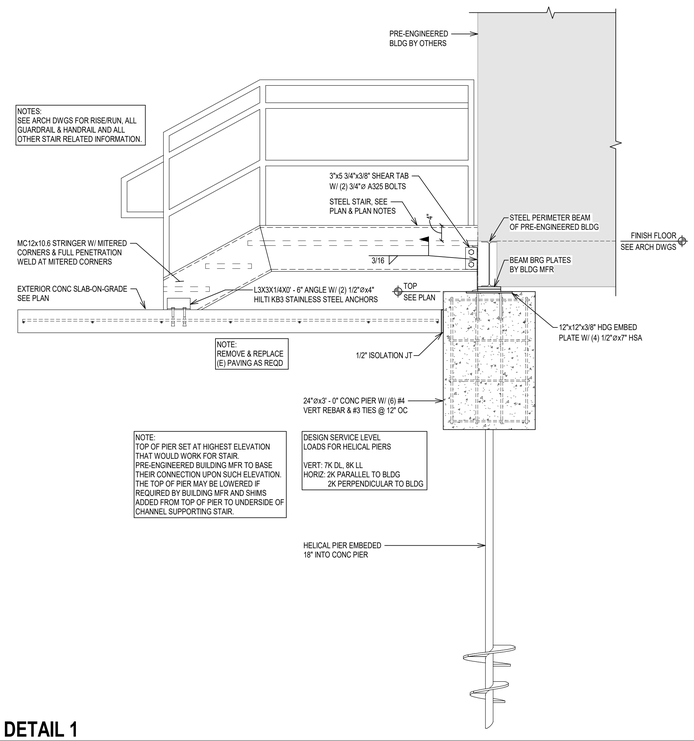

D2 S-101

DETAIL 1

SCALE: 3/4" = 1'-0" REFERENCED FROM: B1 / S-101

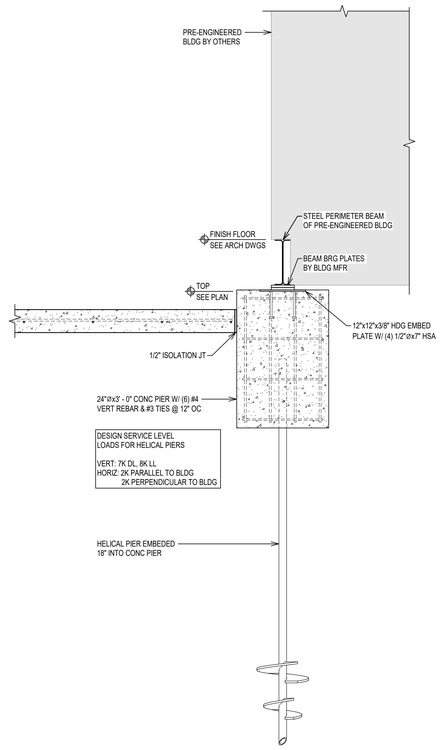

D3 S-101

DETAIL 2

SCALE: 3/4" = 1'-0" REFERENCED FROM: B1 / S-101

SHEET NOTES

NOTES

- ALL ITEMS ABOVE THE CONCRETE PIERS (WITH EXCEPTION OF STAIRS) ARE PART OF THR PRE-ENGINEERED PRE-FABRICATED BUILDING ENCLOSURE.
- CONNECTION OF PRE-FABRICATED BUILDING TO THE CONCRETE PIERS TO BE DESIGNED BY ENGINEER FOR THE PRE-FABRICATED BUILDING.
- PIER LAYOUTS ARE PRELIMINARY AND MAY BE ADJUSTED BY PRE-FABRICATED BUILDING ENGINEER. ANY CHENGES TO THR NUMBER AND/OR LOCATION OF THE PIERS, ASSOCIATED HELICAL PIERS, AND ALL OTHER RELATED WORK CONSIDERED INCIDENTAL TO THE PROJECT AND ANY CHANGES IN COSTS FROM SUBCONTRACTORS ENTIRELY RESPONSIBILITY OF CONTRACTOR.

NO.	DESCRIPTION	DATE
01	BID - PEMIIT SET	05/09/2025

CONSULTANTS

CIVIL:
FMG ENGINEERING
FMG ENGINEERING
3700 STURGIS RD
RAPID CITY, SD 57702-0317
Phone: 605-342-4105
ALEX FISHER

STRUCTURAL:
Albertson Engineering Inc.
ALBERTSON ENGINEERING INC.
3202 W MAIN ST SUITE C
RAPID CITY, SD 57702
Phone: 605-343-9606

MEP:
WPE WEST PLAINS ENGINEERING, INC.
WEST PLAINS ENGINEERING, INC.
1750 RAND RD
RAPID CITY, SD 57702
Phone: 605-348-7455
DAREN BECKLOFF

DESIGNER OF RECORD

A/E:
STONE GROUP ARCHITECTS

STAMP
REGISTERED PROFESSIONAL ENGINEER
REG. NO. 6192
MICHAEL D. ALBERTSON
SOUTH DAKOTA
05-09-25

Office of Construction and Facilities Management

VA U.S. Department of Veterans Affairs

Drawing Title: FOUNDATION ,STAIR FRAMING PLAN & DETAILS	Phase: BID - PERMIT SET	Project Title: HOT SPRINGS ELECTRICAL UPGRADE	Project Number: VA #VA #568A4-24-202 SGA #AEI #24-238
			Building Number: 10, 12 & 64
Approved: DOUG SPRINKLE	FULLY SPRINKLERED	Location: HOT SPRINGS, SD 47747	Drawing Number: S-101
		Issue Date: 5.9.2025 / Checked: MDA / Drawn: JAB	

VA FORM 08 - 6231

C:\Users\jeffb\Documents\24-238 SA\MODEL R-23_JAB55SSK.rvt

5/9/2025 9:17:38 AM

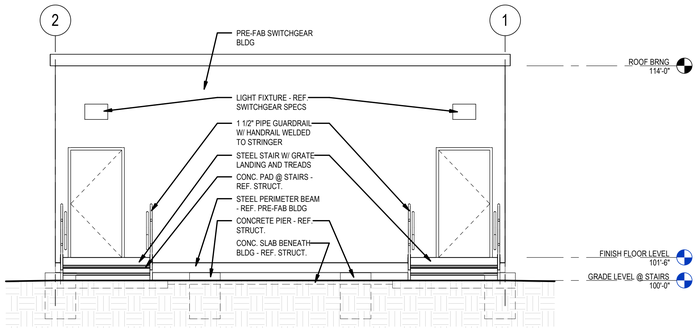

A1 EXT ELEVATION (NEW) - NORTH
1/4" = 1'-0"
D4 / AE101

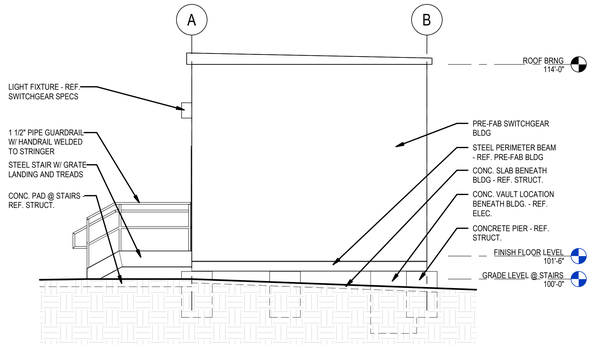

B1 EXT ELEVATION (NEW) - WEST
1/4" = 1'-0"
D4 / AE101

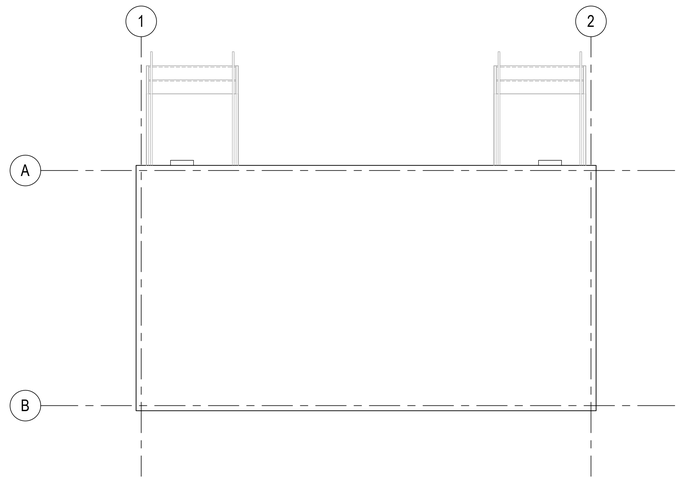

B4 ROOF PLAN - NEW ELEC BLDG
1/4" = 1'-0"

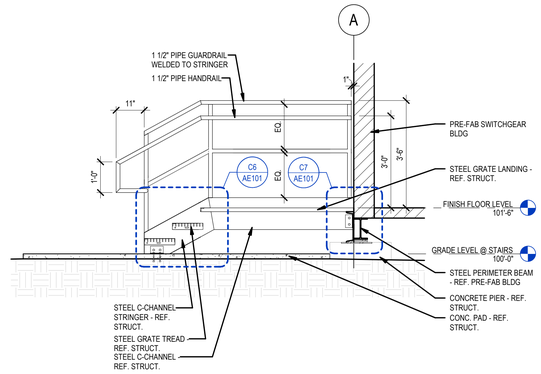

B6 SECTION - TYPICAL STAIR
1/2" = 1'-0"
D4 / AE101

GENERAL PLAN NOTES

A. ANY DISCREPANCIES OR CONFLICTS FOUND IN THE VARIOUS PARTS OF THE CONSTRUCTION DOCUMENTS SHALL BE BROUGHT TO THE ATTENTION OF THE ARCHITECT & THE OWNER BEFORE PROCEEDING WITH THE WORK.
B. WRITTEN DIMENSIONS TAKE PRECEDENCE OVER SCALED DIMENSIONS. DO NOT SCALE THE DRAWINGS.
C. CONTRACTOR & SUBCONTRACTORS TO VERIFY ALL EXISTING CONDITIONS AT THE PROJECT SITE.
D. ALL MATERIALS & EQUIPMENT SHALL BE INSTALLED PER MANUFACTURERS INSTRUCTIONS.
E. DETAILS SHOWN ARE TYPICAL UON. SIMILAR DETAILS APPLY IN SIMILAR CONDITIONS.
F. SEE CIVIL, STRUCTURAL, MECHANICAL, ELECTRICAL, & PLUMBING DRAWINGS FOR ADDITIONAL INFORMATION.
G. DIMENSIONS ARE TO FACE OF FRAMING, CENTERLINE OF EQUIPMENT, CENTERLINE OF FIXTURE, OR GRID UON. DIMENSIONS ARE TO FACE OF FINISH ON INTERIOR ELEVATIONS AND/OR WHERE THE ABBREVIATION "CLR" IS USED UON.

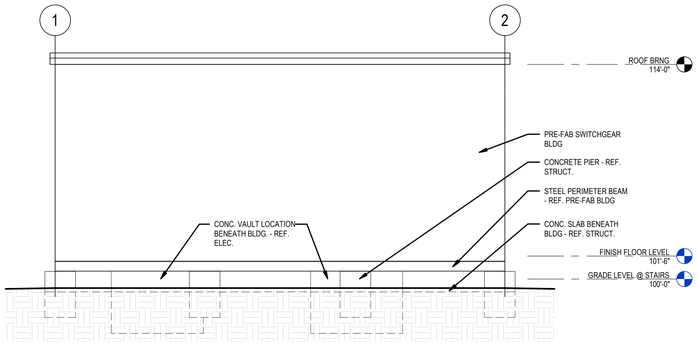

C1 EXT ELEVATION (NEW) - SOUTH
1/4" = 1'-0"
D4 / AE101

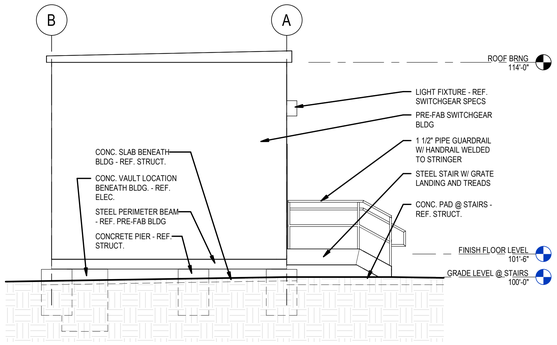

D1 EXT ELEVATION (NEW) - EAST
1/4" = 1'-0"
D4 / AE101

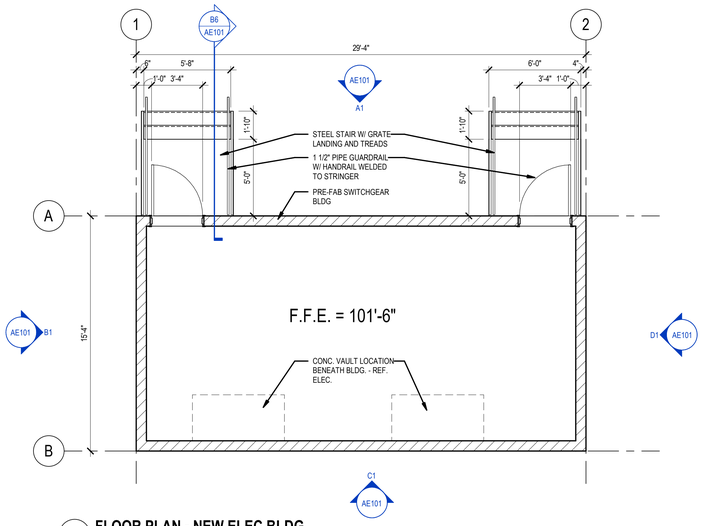

D4 FLOOR PLAN - NEW ELEC BLDG
1/4" = 1'-0"

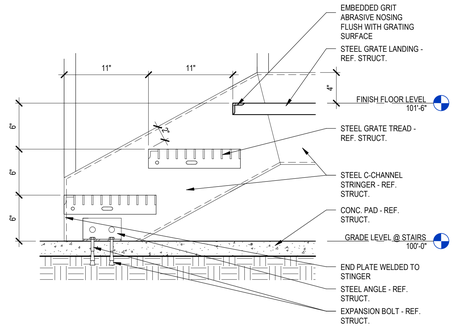

C6 DETAIL - TREAD / STRINGER CONNECTIONS
1 1/2" = 1'-0"
D4 / AE101

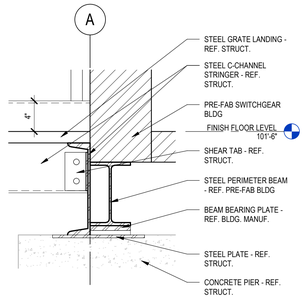

C7 DETAIL - STAIR CONNECTION @ PRE-FAB BLDG
1 1/2" = 1'-0"
D4 / AE101

NO.	DESCRIPTION	DATE
01	BID - PERMIT SET	05/09/2025

CONSULTANTS

CIVIL:
FMG ENGINEERING
FMG ENGINEERING
3700 STURGIS RD
RAPID CITY, SD 57702-0317
Phone: 605-342-4105
ALEX FISHER

STRUCTURAL:
Albertson Engineering Inc.
ALBERTSON ENGINEERING INC.
3202 W MAIN ST SUITE C
RAPID CITY, SD 57702
Phone: 605-343-9606
STEPHEN KILBER

MEP:
WPE WEST PLAINS ENGINEERING, INC.
WEST PLAINS ENGINEERING, INC.
1750 RAND RD
RAPID CITY, SD 57702
Phone: 605-348-7455
DAREN BECKLOFF

DESIGNER OF RECORD

A/E:
STONE GROUP ARCHITECTS
600 EAST 7TH STREET
SIOUX FALLS, SD 57103
605-271-1144
GARRY BLACK
STONE GROUP ARCHITECTS

STAMP

REGISTERED ARCHITECT
STATE OF SOUTH DAKOTA
TODD RANDALL GROVE
NO. 3000
WITH DIGITAL SEAL
5.9.25

Office of Construction and Facilities Management

VA U.S. Department of Veterans Affairs

Drawing Title	ARCHITECTURAL FLOOR PLAN, ROOF PLAN, EXTERIOR ELEVATIONS, STAIR SECTION AND DETAILS
Approved	DOUG SPRINKLE
Phase	BID - PERMIT SET
	FULLY SPRINKLERED
Project Title	HOT SPRINGS ELECTRICAL UPGRADE
Location	HOT SPRINGS, SD 47747
Issue Date	05-09-2025
Checked	GB
Drawn	DT
Project Number	VA #568A4-24-202 SGA #241938
Building Number	10, 12 & 64
Drawing Number	AE101

VA FORM 08 - 6231

C:\Users\d.bugeja\Documents\241938_VA Hot Springs_Elec Upgrade_dainrul2025_r4
5/9/2025 1:49:44 PM

1 ELECTRICAL SITE PLAN - DEMOLITION

1" = 10'-0"

ELECTRICAL MISCELLANEOUS NOTES:

A. ALL INDICATED EQUIPMENT TO BE DEMOLISHED TO BE COMPLETELY DE-ENERGIZED PRIOR TO WORK STARTING.

B. UNLESS SPECIFICALLY NOTED, ALL EQUIPMENT SHOWN IS EXISTING TO REMAIN.

C. EXISTING EQUIPMENT IS SHOWN HALFTONE. EQUIPMENT BEING DEMOLISHED IS SHOWN HATCHED.

D. CONTRACTOR TO FIELD VERIFY THE EXACT SIZE OF EXISTING EQUIPMENT PRIOR TO DEMOLITION. EXISTING ELECTRICAL EQUIPMENT ARE SIZED BASED ON AVAILABE RECORD DRAWINGS.

E. OWNER RETAINS THE RIGHT TO REFUSE POSSESSION OF ANY AND/OR ALL EXISTING INDICATED EQUIPMENT TO BE DEMOLISHED. ANY'THING NOT REQUESTED TO BE SALVAGED BY THE OWNER SHALL BE REMOVED BY CONTRACTOR OFF SITE.

(X) ELECTRICAL SPECIFIC NOTES:

E001 EXISTING UNDERGROUND PRIMARY SOURCE FROM BLACKHILLS ENERGY TO BE DISCONNECTED AND REMOVED. COORDINATE CUTOVER WITH BHE AND VA PROJECT MANAGER.

E002 EXISTING UNDERGROUND PRIMARY DISTRIBUTION TO CAMPUS LOOP TO BE DISCONNECTED AND REMOVED AT JUNCTION BOX FOR LOOP A & B. COORDINATE CUTOVER WITH BHE AND VA PROJECT MANAGER.

E003 EXISTING UNDERGROUND ALTERNATE SOURCE FROM BLACKHILLS ENERGY TO BE DISCONNECTED AND REMOVED. COORDINATE CUTOVER WITH BHE AND VA PROJECT MANAGER.

REVISION #	DESCRIPTION	DATE
01	BID SET	05/09/2025

CONSULTANTS

CIVIL:
FMG ENGINEERING
3700 STURGIS RD
RAPID CITY, SD 57702-0317
Phone: 605-342-4105
ALEX FISHER

STRUCTURAL:
ALBERTSON ENGINEERING INC.
3202 W MAIN ST SUITE C
RAPID CITY, SD 57702
Phone: 605-343-9606
STEPHEN KILBER

MEP: WPE # BU24018
WEST PLAINS ENGINEERING, INC.
1750 RAND RD
RAPID CITY, SD 57702
Phone: 605-348-7455
DAREN BECKLOFF

DESIGNER OF RECORD
A/E:
STONE GROUP ARCHITECTS
600 EAST 7TH STREET
SIOUX FALLS, SD 57103
605-271-1144
GARRY BLACK

STAMP

REGISTERED PROFESSIONAL ENGINEER
REG. NO. 9152
DAREN WAYNE BECKLOFF
SOUTH DAKOTA
5/9/25

Office of Construction and Facilities Management

VA U.S. Department of Veterans Affairs

Drawing Title	ELECTRICAL SITE PLAN - DEMOLITION
Phase	BID - PERMIT SET
Project Title	HOT SPRINGS ELECTRICAL UPGRADE
Project Number	VA #568A4-24-202 SGA #241938
Building Number	10, 12 & 64
Approved	DOUG SPRINKLE FOR OFFICIAL USE ONLY
	FULLY SPRINKLERED FOR OFFICIAL USE ONLY
Location	HOT SPRINGS, SD 47747
Issue Date	05-09-2025
Checked	DWB
Drawn	DWB
Drawing Number	E001

VA FORM 08 - 6231

P:\VA\2024\241938 VA Hot Springs Upgrade Electrical\E_Drawings-Revit\Exports\Revit Update\241938_VA Hot Springs_Elec Upgrade_01-10-2025.rvt

1/10/2025 12:00:05 PM

GENERAL NOTE:
1. INCLUDE ALUMINUM LADDER (NOT SHOWN FOR CLARITY)
2. CONDUIT LOCATIONS ARE TYPICAL & NOT SHOWN TO EXACT DIMENSIONS OR QUANTITIES
3. MANHOLE TO BE PRECAST, DESIGN BY SUPPLIER

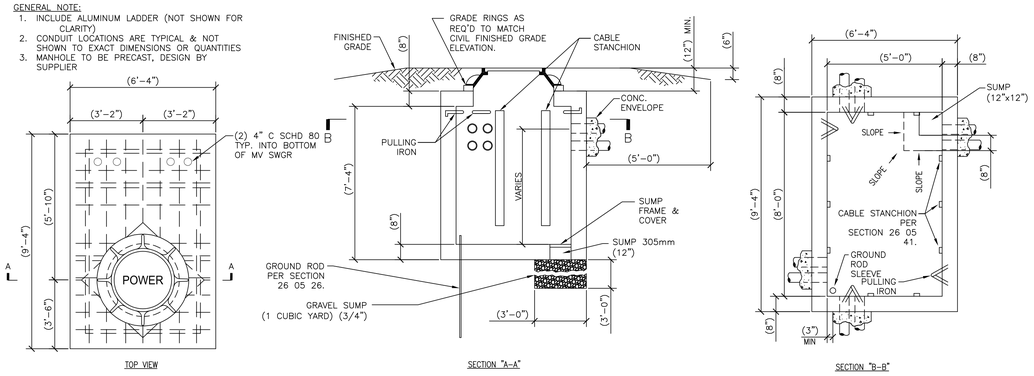

1 POWER MANHOLE DETAILS
NO SCALE

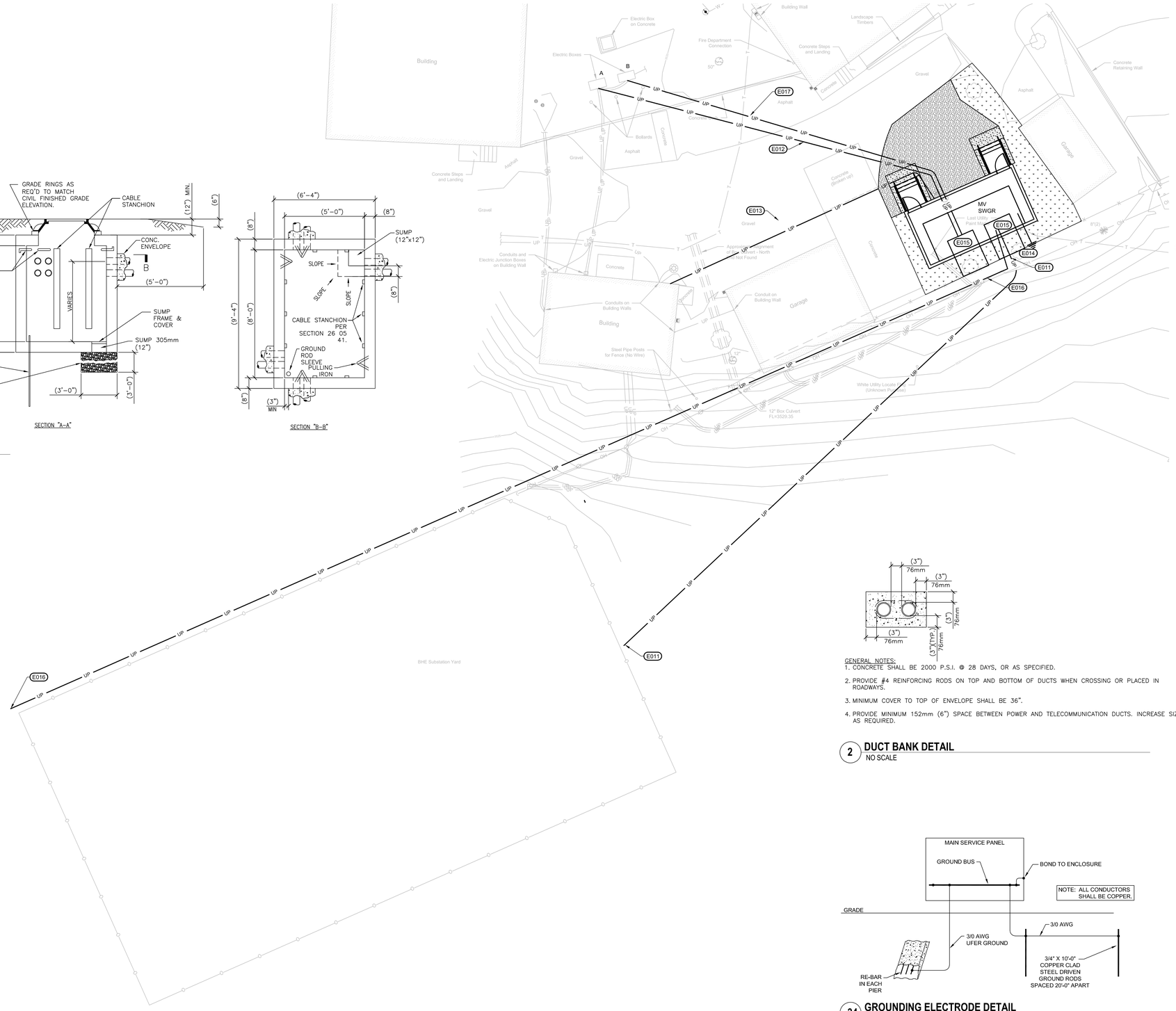

3 ELECTRICAL SITE PLAN - REMODEL
1" = 10'-0"

ELECTRICAL MISCELLANEOUS NOTES:

A. ALL INDICATED EQUIPMENT TO BE DEMOLISHED TO BE COMPLETELY DE-ENERGIZED PRIOR TO WORK STARTING.

B. UNLESS SPECIFICALLY NOTED, ALL EQUIPMENT SHOWN IS EXISTING TO REMAIN.

C. EXISTING EQUIPMENT IS SHOWN HALFTONE. EQUIPMENT BEING DEMOLISHED IS SHOWN HATCHED.

D. CONTRACTOR TO FIELD VERIFY THE EXACT SIZE OF EXISTING EQUIPMENT PRIOR TO DEMOLITION. EXISTING ELECTRICAL EQUIPMENT ARE SIZED BASED ON AVAILABE RECORD DRAWINGS.

E. OWNER RETAINS THE RIGHT TO REFUSE POSSESSION OF ANY AND/OR ALL EXISTING INDICATED EQUIPMENT TO BE DEMOLISHED. ANYTHING NOT REQUESTED TO BE SALVAGED BY THE OWNER SHALL BE REMOVED BY CONTRACTOR OFF SITE.

X ELECTRICAL SPECIFIC NOTES:

E011 NEW UNDERGROUND PRIMARY SOURCE FROM BLACKHILLS ENERGY TO BE BROUGHT TO NEW MEDIUM VOLTAGE SWITCHGEAR VAULT. COORDINATE CUTOVER WITH BHE AND VA PROJECT MANAGER. ROUTE ALL 15KV PRIMARY IN CONCRETE 2-WAY DUCTBANK WITH 4"PVC, SEE DETAIL.

E012 NEW UNDERGROUND PRIMARY DISTRIBUTION TO CAMPUS LOOP TO BE CONNECTED AT JUNCTION BOX FOR LOOP A. COORDINATE CUTOVER WITH BHE AND VA PROJECT MANAGER. ROUTE ALL 15KV PRIMARY IN CONCRETE 2-WAY DUCTBANK WITH 4"PVC, SEE DETAIL.

E013 PROVIDE UNDERGROUND SECONDARY 240V 100A2P FEEDER (3#2 & #8G) IN 2" PVC SCHD 80 TO NEW SWITCHGEAR BUILDING FROM PANEL 64.

E014 PROVIDE GROUNDING FOR PRIMARY SWITCHGEAR PER GROUNDING DETAIL.

E015 PROVIDE MANHOLE FOR 15KV CABLING INTO MV SWGR. SEE DETAIL

E016 NEW UNDERGROUND ALTERNATE SOURCE FROM BLACKHILLS ENERGY TO BE BROUGHT TO NEW MEDIUM VOLTAGE SWITCHGEAR VAULT. COORDINATE CUTOVER WITH BHE AND VA PROJECT MANAGER. ROUTE ALL 15KV PRIMARY IN CONCRETE 2-WAY DUCTBANK WITH 4"PVC, SEE DETAIL.

E017 NEW UNDERGROUND PRIMARY DISTRIBUTION TO CAMPUS LOOP TO BE CONNECTED AT JUNCTION BOX FOR LOOP B. COORDINATE CUTOVER WITH BHE AND VA PROJECT MANAGER. ROUTE ALL 15KV PRIMARY IN CONCRETE 2-WAY DUCTBANK WITH 4"PVC, SEE DETAIL.

GENERAL NOTES:
1. CONCRETE SHALL BE 2000 P.S.I. @ 28 DAYS, OR AS SPECIFIED.
2. PROVIDE #4 REINFORCING RODS ON TOP AND BOTTOM OF DUCTS WHEN CROSSING OR PLACED IN ROADWAYS.
3. MINIMUM COVER TO TOP OF ENVELOPE SHALL BE 36".
4. PROVIDE MINIMUM 152mm (6") SPACE BETWEEN POWER AND TELECOMMUNICATION DUCTS. INCREASE SIZE AS REQUIRED.

2 DUCT BANK DETAIL
NO SCALE

34 GROUNDING ELECTRODE DETAIL
NO SCALE

REVISION #	DESCRIPTION	DATE
01	BID SET	05/09/2025

CONSULTANTS

CIVIL:
FMG ENGINEERING
3700 STURGIS RD
RAPID CITY, SD 57702-0317
Phone: 605-342-4105
ALEX FISHER

STRUCTURAL:
Albertson Engineering Inc.
ALBERTSON ENGINEERING INC.
3202 W MAIN ST SUITE C
RAPID CITY, SD 57702
Phone: 605-343-9606
STEPHEN KILBER

MEP: WPE # BU24018
WEST PLAINS ENGINEERING, INC.
WEST PLAINS ENGINEERING, INC.
1750 RAND RD
RAPID CITY, SD 57702
Phone: 605-348-7455
DAREN BECKLOFF

DESIGNER OF RECORD

A/E:
STONE GROUP ARCHITECTS
600 EAST 7TH STREET
SIOUX FALLS, SD 57103
605-271-1144
GARRY BLACK

STONE GROUP ARCHITECTS

STAMP

REGISTERED PROFESSIONAL ENGINEER
REG. NO. 9162
DAREN WAYNE BECKLOFF
SOUTH DAKOTA
5/9/25

Office of Construction and Facilities Management

VA U.S. Department of Veterans Affairs

Drawing Title	Phase	Project Title	Project Number
ELECTRICAL SITE PLAN - REMODEL	BID - PERMIT SET	HOT SPRINGS ELECTRICAL UPGRADE	VA #568A4-24-202 SGA #241938
			Building Number: 10, 12 & 64
Approved: DOUG SPRINKLE	FULLY SPRINKLERED	Location: HOT SPRINGS, SD 47747	Drawing Number: E002
FOR OFFICIAL USE ONLY	FOR OFFICIAL USE ONLY	Issue Date: 05-09-2025 / Checked: DWB / Drawn: DWB	

VA FORM 08 - 6231

P:\VA\2024\241938 VA Hot Springs Upgrade Electrical\E_Drawings-Revit\Exports\Revit Uploads\241938_VA Hot Springs_Elec Upgrade_01-10-2025.rvt

11/10/2025 12:00:05 PM

ELECTRICAL ABBREVIATIONS

A STANDARD LIST, NOT ALL WORDS APPEAR IN THESE DRAWINGS.

SEE SPECIFICATION SECTION "EQUIPMENT WIRING" FOR ADDITIONAL INFORMATION AND REQUIREMENTS.

A or AMP	AMPERE	LA	LIGHTNING ARRESTOR
A/C	AIR CONDITIONING	LT	LIGHT
A/E or AE	ARCHITECT & ENGINEER	LTG	LIGHTING
a/c	ABOVE COUNTER	LTS	LIGHTS
AC	ALTERNATING CURRENT		
ADA	AMERICANS WITH DISABILITIES ACT	MC	MECHANICAL CONTRACTOR
AFF	ABOVE FINISH FLOOR	MCB	MAIN CIRCUIT BREAKER
AFG	ABOVE FINISH GRADE	MCC	MOTOR CONTROL CENTER
AFI or AFCI	ARC FAULT CIRCUIT INTERRUPTER	MCM	THOUSAND CIRCULAR MILS
AHJ	AUTHORITY HAVING JURISDICTION	MDP	MAIN DISTRIBUTION PANEL
AHU	AIR HANDLING UNIT	MECH	MECHANICAL
AIC	AMPERES INTERRUPTING CURRENT	MFS	MAIN FUSIBLE SWITCH
AL	ALUMINUM	MH	METAL HALIDE
ANN	ANNUNCIATOR	MLO	MAIN LUG ONLY
AS	AUTOMATIC SENSORS	MSB	MAIN SWITCHBOARD
AWG	AMERICAN WIRE GAUGE	MTD	MOUNTED
		MTS	MOTOR THERMAL SWITCH
bc	BELOW COUNTER	MV	MERCURY VAPOR
BC	BELOW COUNTER	MW	MICROWAVE
BH	BASKETBALL HOOP OPER		
BL	BLEACHER ELECTRIC OPERATOR	NA or N/A	NOT APPLICABLE
BRD or BD	BOARD	NC	NORMALLY CLOSED
BUH	BLAST UNIT HEATER	NEC	NATIONAL ELECTRICAL CODE
		NEMA	NATIONAL ELECTRICAL MANUFACTURERS ASSOCIATION
C or COND	CONDUIT		
C/B or CB	CIRCUIT BREAKER	NEU. NEUT or N	NEUTRAL
CAT	CATEGORY	NF	NON-FUSED
CCT or CKT	CIRCUIT	NL	NIGHT LIGHT
CM	CARBON MONOXIDE SENSOR	NO	NORMALLY OPEN
CO	CARBON MONOXIDE		
COMB	COMBINATION	OFF, OF , or OFC	OFFICE
CONF	CONFERENCE	OH	OVERHEAD
CP	CEILING PROJECTOR	OHD	OVERHEAD DOOR
CTC	CABLE TERMINATION CABINET		
Cu or CU	COPPER	P	POLE
CU	CONDENSING UNIT	PA	PUBLIC ADDRESS
CUH	CABINET UNIT HEATER	PB	PUSH BUTTON
		PH	PHASE
DC	DIRECT CURRENT	PLBG	PLUMBING
DC	DISTRIBUTION CABINET	PNL	PANEL
DP	DISTRIBUTION PANEL	PR or pr	PAIR
DISC	DISCONNECT	PRV	POWER ROOF VENTILATOR
DISP	DISPOSAL	PS	PULL SWITCH
DL	DOCK LEVELER	PS	PROTECTION SCREEN
DN or DWN	DOWN	PTZ	PAN TILT ZOOM
DR	DOOR	PVC	POLYVINYL CHLORIDE
DW	DISHWASHER	PWR	POWER
DWG	DRAWING		
		RCP	REFLECTED CEILING PLAN
EC	ELECTRICAL CONTRACTOR	REC or RECEPT	RECEPTACLE
EC	ELECTRICAL CABINET	REF or REFRIG	REFRIGERATOR
EF	EXHAUST FAN	RH	RADIANT HEAT
EH	ELECTRICAL HEAT	RH	RANGE HOOD
ELEC	ELECTRIC OR ELECTRICAL	RLY	RELAY
EHD	ELECTRIC HAND DRYER	RM	ROOM
EM or EMERG	EMERGENCY	RMS	ROOT MEAN SQUARE
EMT	ELECTRICAL METALLIC TUBING		
ENT	ELECTRICAL NONMETALLIC TUBING	SCC	SHORT CIRCUIT CURRENT
EUH	ELECTRIC UNIT HEATER	SD	SMOKE DETECTOR
EWC	ELECTRIC WATER COOLER	SFR	SAFETY RECEPTACLE
EX	EXISTING	SFTY	SAFETY
EXP	EXPLOSION PROOF	SHLD	SHIELD OR SHIELDED
		SIG	SIGNAL
F or FUS	FUSE OR FUSIBLE	SMR	SURFACE MOUNT RACEWAY
FA	FIRE ALARM	SN	SOLID NEUTRAL
FAAP	FIRE ALARM ANNUNCIATOR PANEL	SP	SUMP PUMP
FACP	FIRE ALARM CONTROL PANEL	SPECS	SPECIFICATIONS
FBO	FURNISHED BY OTHERS	SPKR	SPEAKER
FL, FLU or FLUOR	FLUORESCENT	SPR	SPLIT WIRE RECEPTACLE
FLA	FULL LOAD AMPERES	SW	SWITCH
FVNR	FULL VOLTAGE, NON-REVERSING	SWBD	SWITCH BOARD
FVR	FULL VOLTAGE, REVERSING		
		TC	TEMPERATURE CONTROL
GC	GENERAL CONTRACTOR	TC	TELEPHONE CABINET
GD	GARBAGE DISPOSAL	TCC	TEMPERATURE CONTROL CONTRACTOR
GEN	GENERATOR	TEL	TELEPHONE
GFI or GFCI	GROUND FAULT CIRCUIT INTERRUPTER	TL	TWIST LOCK
GRC	GALVANIZED RIGID CONDUIT	TR, TRANS or TRFMR	TRANSFORMER
GND or GRND	GROUND	TTB	TELEPHONE TERMINATION BOARD
		TV	TELEVISION
H & AC	HEATING & AIR CONDITIONING	TVSS	TRANSIENT VOLTAGE SURGE SUPPRESSION
H & V	HEATING & VENTILATING	TYP	TYPICAL
HA	HANDICAP ACCESS DOOR		
HD	HAND DRYER	UG	UNDERGROUND
HID	HIGH INTENSITY DISCHARGE	UH	UNIT HEATER
HP	HORSE POWER	UV	UNIT VENTILATOR
HPS	HIGH PRESSURE SODIUM		
HTG	HEATING	V	VOLT
HTR	HEATER	VFD	VARIABLE FREQUENCY DRIVE
HVAC	HEATING, VENTILATION & AIR CONDITIONING		
HZ	HERTZ (CYCLES/SEC)	W	WATT
		W/	WITH
IC	INTERRUPTING CURRENT	W/O	WITHOUT
IGR	ISOLATED GROUND RECEPTACLE	WP	WEATHERPROOF
IMC	INTERMEDIATE METAL CONDUIT	WTR or H2O	WATER
INC	INCANDESCENT	WS	WINDOW SHADE
ISO	ISOLATED OR ISOLATION		
		XFMR	TRANSFORMER
J , JB or J-BOX	JUNCTION BOX		
		Y	WYE CONNECTION
KCMIL	THOUSAND CIRCULAR MILS		
KV	KILOVOLT	Φ	PHASE
KVA	KILOVOLT - AMPERE		
KVAR	KILOVOLT - AMPERE REACTIVE	Δ	DELTA
KW	KILOWATT		
KWH	KILOWATT - HOUR		

ELECTRICAL SYMBOLS

THESE SYMBOLS COMPRISE A STANDARD LIST; NOT ALL SYMBOLS MAY APPEAR ON THIS PROJECT.

ALL MOUNTING HEIGHTS ARE TO CENTER OF DEVICE ABOVE FINISHED FLOOR. MOUNTING HEIGHTS INDICATED ON ARCH. WALL ELEVATIONS ORAS NOTED SPECIFICALLY ON THE DRAWINGS OR IN THE SPECIFICATIONS SHALL TAKE PRECEDENCE OVER MOUNTING HEIGHTS LISTED BELOW.

LIGHTING

- A, a — CEILING SURFACE MOUNT FIXTURE. (Capital letter indicates fixture type. Small letter indicates switching. Typical for all fixture types).
- EMERGENCY CEILING SURFACE MOUNT FIXTURE
- WALL FIXTURE
- EMERGENCY WALL FIXTURE
- RECESSED FIXTURE
- EMERGENCY RECESSED FIXTURE
- EXTERIOR POLE LIGHT
- BOLLARD LIGHT
- SURFACE MOUNT FLUORESCENT FIXTURE
- EMERGENCY SURFACE MOUNT FLUORESCENT FIXTURE
- RECESSED FLUORESCENT FIXTURE
- EMERGENCY RECESSED FLUORESCENT FIXTURE
- FLOOD LIGHT
- TRACK LIGHT
- PC — PHOTO ELECTRIC CELL
- LC — LIGHTING CONTACTOR (54"M.H.)
- TC — TIME CLOCK (60" M.H.)
- EMERGENCY LIGHTING W/BATTERY PACK
- CEILING EXIT LIGHT (FACE(S) SHADED, ARROW INDICATES CHEVRON)
- WALL EXIT LIGHT (FACE(S) SHADED, ARROW INDICATES CHEVRON)
- OS — OCCUPANCY SENSOR
- $ — SINGLE POLE SWITCH (46" M.H.)
- $2 — DOUBLE POLE SWITCH (46" M.H.)
- $3 — THREE-WAY SWITCH (46" M.H.)
- $4 — FOUR-WAY SWITCH (46" M.H.)
- $P — SWITCH WITH PILOT (46" M.H.)
- $K — KEY OPERATED SWITCH (46" M.H.)
- $M — MOMENTARY CONTACT SWITCH (60" M.H.)
- $D — DIMMER SWITCH (46" M.H.)
- $T — TIMER SWITCH (60" M.H.)
- $S — VARIABLE SPEED SWITCH
- $F — FUSED SWITCH

POWER

- PUSH BUTTON STATION (62" M.H.)
- DOUBLE PUSH BUTTON STATION
- EMERGENCY SHUTDOWN PUSHBUTTON
- ISOLATED GROUND RECEPTACLE (18" M.H.)
- DUPLEX CONVENIENCE RECEPTACLE (18" M.H.)
- SINGLE RECEPTACLE (18" M.H.)
- DOUBLE DUPLEX CONVENIENCE RECEPTACLE (18" M.H.)
- SPLIT WIRED DUPLEX RECEPTACLE (18" M.H)
- SAFETY CONVENIENCE RECEPTACLE
- POWER RECEPTACLE
- EMERGENCY DUPLEX RECEPTACLE
- TWIST LOCK RECEPTACLE
- GFI DUPLEX CONVENIENCE RECEPTACLE
- GFI DOUBLE DUPLEX CONVENIENCE RECEPTACLE
- SPECIAL PURPOSE OUTLET OR CONNECTION
- CORD/PLUG
- CORD REEL
- CEILING DUPLEX RECEPTACLE
- FLUSH FLOOR DUPLEX RECEPTACLE
- FLUSH FLOOR DOUBLE DUPLEX RECEPTACLE
- FLUSH FLOOR MULTI-SERVICE OUTLET (WITH DEVICES INDICATED)
- MULTI-SERVICE POLE (WITH DEVICES INDICATED)
- B — BLANK OUTLET
- J — JUNCTION BOX
- P — PULL BOX
- MOTOR
- DISCONNECT SWITCH
- GAP — GENERATOR ANNUNCIATOR PANEL
- ATS — AUTOMATIC TRANSFER SWITCH
- VFD — VARIABLE FREQUENCY DRIVE
- VFD — COMBINATION VARIABLE FREQUENCY DRIVE DISCONNECT
- MAGNETIC STARTER
- COMBINATION STARTER/DISCONNECT
- MOTOR THERMAL SWITCH
- TR — TRANSFORMER
- ELECTRIC METER
- SWITCHBOARD/DISTRIBUTION PANEL SECTION
- PANELBOARD OR LOAD CENTER
- PANELBOARD OR LOAD CENTER (EXISTING TO REMAIN)
- TVSS — TRANSIENT VOLTAGE SURGE SUPPRESSER
- CIRCUIT BREAKER
- FUSE
- H — HUMIDISTAT
- T — THERMOSTAT
- R — REMOTE HVAC SENSOR
- RADIANT HEAT PANEL
- BASEBOARD OR COVE ELEC. HEAT
- ELECTRIC UNIT HEATER
- ELECTRIC CABINET UNIT HEATER
- M — MOTORIZED DAMPER
- BUS DUCT
- SURFACE MOUNT RACEWAY
- CEILING PADDLE FAN
- X — TYPE OF EQUIPMENT
- # — EQUIPMENT NUMBER
- SEE SCHEDULES
- ROOFTOP EQUIPMENT/CIRCUITING
- EXISTING EQUIPMENT/CIRCUITING
- GROUND
- CONDUIT IN FLOOR OR UNDERGROUND
- PNL-1 2 3 — CONDUIT IN WALL OR CEILING SPACE. CROSS MARKS INDICATE NUMBER OF WIRES. NO MARKS INDICATE TWO WIRES. ARROWS INDICATE HOME RUNS TO PANEL. NUMBERS INDICATE PANEL AND CIRCUIT IN PANEL.
- SWITCHLEG
- TRAVELER
- HOT
- NEUTRAL WIRE
- INDICATES SEPARATE GROUND WIRE TO BE INSTALLED IN RACEWAY

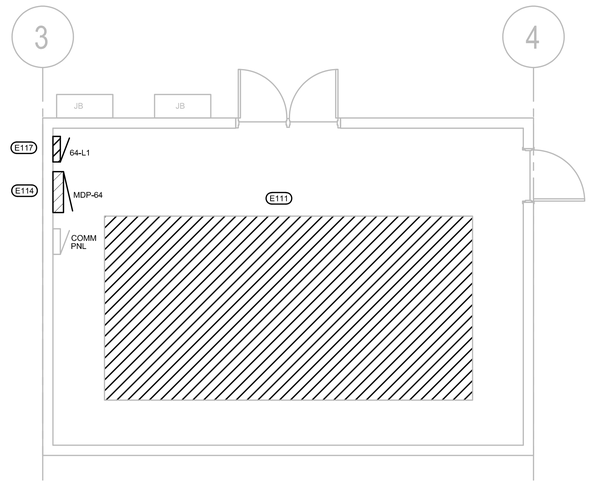

1 **BUILDING 64 MAIN SWITCHGEAR ELECTRICAL REMODEL PLAN**
1/4" = 1'-0"

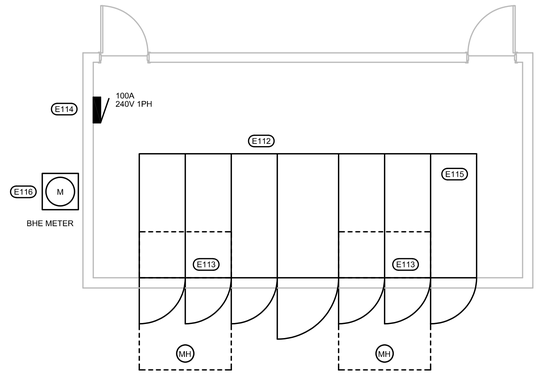

NOTE:
14' CEILING HEIGHT

2 **PRIMARY SWITCHGEAR BLDG ELECTRICAL REMODEL PLAN**
1/4" = 1'-0"

ELECTRICAL MISCELLANEOUS NOTES:

A. ALL INDICATED EQUIPMENT TO BE DEMOLISHED TO BE COMPLETELY DE-ENERGIZED PRIOR TO WORK STARTING.

B. UNLESS SPECIFICALLY NOTED, ALL EQUIPMENT SHOWN IS EXISTING TO REMAIN.

C. EXISTING EQUIPMENT IS SHOWN HALFTONE. EQUIPMENT BEING DEMOLISHED IS SHOWN HATCHED.

D. CONTRACTOR TO FIELD VERIFY THE EXACT SIZE OF EXISTING EQUIPMENT PRIOR TO DEMOLITION. EXISTING ELECTRICAL EQUIPMENT ARE SIZED BASED ON AVAILABE RECORD DRAWINGS.

E. OWNER RESERVES THE RIGHT TO REFUSE POSSESSION OF ANY AND/OR ALL EXISTING INDICATED EQUIPMENT TO BE DEMOLISHED. ANYTHING NOT REQUESTED TO BE SALVAGED BY THE OWNER SHALL BE REMOVED BY CONTRACTOR OFF SITE.

(X) ELECTRICAL SPECIFIC NOTES:

E111 EXISTING ELECTRICAL MAIN CAMPUS 15KV TO BE DISCONNECTED AND REMOVED.

E112 PROVIDE NEW 15KV MAIN CAMPUS SWITCHGEAR IN NEW BUILDING. SWITCHGEAR TO HAVE REAR ACCESS THROUGH EXTERIOR.

E113 PROVIDE MANHOLE UNDER SWITCHGEAR PULL SECTION FOR CABLING CONNECTIONS.

E114 REPLACE PANEL MDP-64 TO FEED NEW 100A PANEL IN SWITCHGEAR SUPPLIED ENCLOSURE.

E115 PROVIDE 50 KVAR 3 PHASE CAPACITOR MOUNTED ON TOP OF SWITCHGEAR TYPRE GE HVT 36F2963200 FUSED W/ENCLOSED TERMINAL BOX.

E116 PROVIDE 1" C TO METER FROM METERING SECTION OF MV SWITCHGEAR

E117 EXISTING PANEL 64-L1 TO BE REMOVED & CIRCUITS PLACED ON NEW PANEL MDP-64

REVISION #	DESCRIPTION	DATE
01	BID SET	05/09/2025

CONSULTANTS

CIVIL:
FMG ENGINEERING
3700 STURGIS RD
RAPID CITY, SD 57702-0317
Phone: 605-342-4105
ALEX FISHER

STRUCTURAL:
Albertson Engineering Inc.
ALBERTSON ENGINEERING INC.
3202 W MAIN ST SUITE C
RAPID CITY, SD 57702
Phone: 605-343-9606
STEPHEN KILBER

MEP: WPE # BU24018
WEST PLAINS ENGINEERING, INC.
1750 RAND RD
RAPID CITY, SD 57702
Phone: 605-348-7455
DAREN BECKLOFF

DESIGNER OF RECORD

A/E:
STONE GROUP ARCHITECTS
600 EAST 7TH STREET
SIOUX FALLS, SD 57103
605-271-1144
GARRY BLACK
STONE GROUP ARCHITECTS

STAMP

REGISTERED PROFESSIONAL ENGINEER
REG. NO. 9162
DAREN WAYNE BECKLOFF
SOUTH DAKOTA
5/9/25

Office of Construction and Facilities Management

VA U.S. Department of Veterans Affairs

Drawing Title: PRIMARY SWITCHGEAR BLDG ELECTRICAL PLANS	Phase: BID - PERMIT SET	Project Title: HOT SPRINGS ELECTRICAL UPGRADE	Project Number: VA #568A4-24-202 SGA #241938
			Building Number: 10, 12 & 64
Approved: DOUG SPRINKLE	FULLY SPRINKLERED	Location: HOT SPRINGS, SD 47747	Drawing Number: E101
FOR OFFICIAL USE ONLY	FOR OFFICIAL USE ONLY	Issue Date: 05-09-2025 / Checked: DWB / Drawn: DWB	

VA FORM 08 - 6231

P:\VA\2024\241938 VA Hot Springs Upgrade Electrical\E_Drawings-Revit\Exports\Revit Uploads\241938_VA Hot Springs_Elec Upgrade_21-10-2025.rvt

11/10/2025 12:00:05 PM

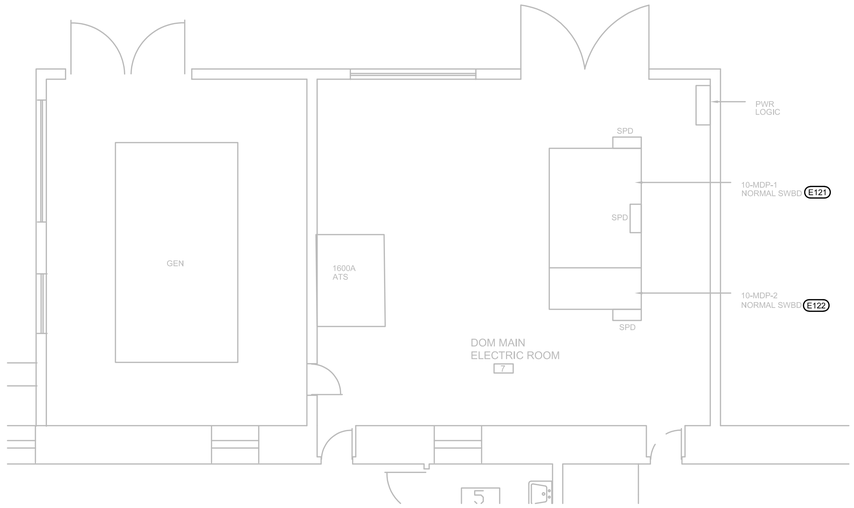

1 **BUILDING 10 ELECTRICAL DEMOLITION PLAN**
1/4" = 1'-0"

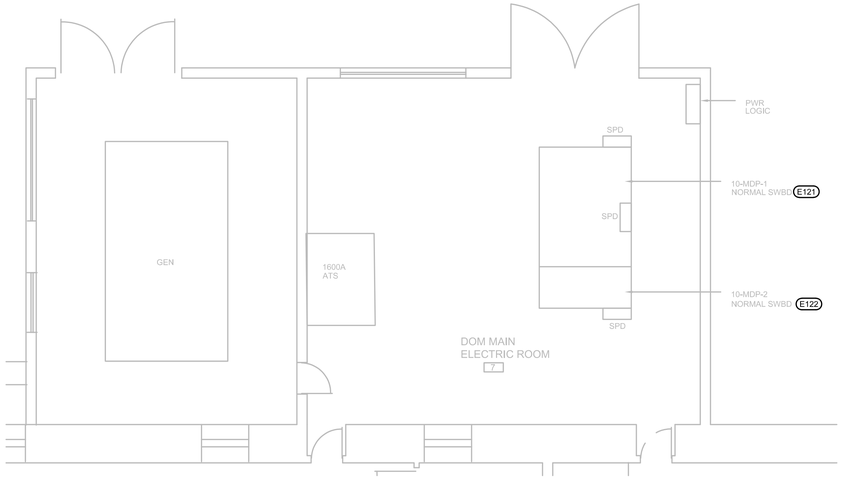

2 **BUILDING 10 ELECTRICAL REMODEL PLAN**
1/4" = 1'-0"

ELECTRICAL MISCELLANEOUS NOTES:

A. ALL INDICATED EQUIPMENT TO BE DEMOLISHED TO BE COMPLETELY DE-ENERGIZED PRIOR TO WORK STARTING.

B. UNLESS SPECIFICALLY NOTED, ALL EQUIPMENT SHOWN IS EXISTING TO REMAIN.

C. EXISTING EQUIPMENT IS SHOWN HALFTONE. EQUIPMENT BEING DEMOLISHED IS SHOWN HATCHED.

D. CONTRACTOR TO FIELD VERIFY THE EXACT SIZE OF EXISTING EQUIPMENT PRIOR TO DEMOLITION. EXISTING ELECTRICAL EQUIPMENT ARE SIZED BASED ON AVAILABE RECORD DRAWINGS.

E. OWNER RETAINS THE RIGHT TO REFUSE POSSESSION OF ANY AND/OR ALL EXISTING INDICATED EQUIPMENT TO BE DEMOLISHED. ANYTHING NOT REQUESTED TO BE SALVAGED BY THE OWNER SHALL BE REMOVED BY CONTRACTOR OFF SITE.

(X) **ELECTRICAL SPECIFIC NOTES:**

E121 REPLACE EXISTING DRAWOUT STYLE BREAKERS IN NORMAL POWER SWITCHBOARD 10-MDP-1. SEE E-501 FOR SWITCHBOARD SCHEDULES.

E122 REPLACE EXISTING DRAWOUT STYLE BREAKERS IN EMERGENCY POWER SWITCHBOARD 10-MDP-2. SEE E-501 FOR SWITCHBOARD SCHEDULES.

REVISION #	DESCRIPTION	DATE
01	BID SET	05/09/2025

P:\VA\02\04A4\168 VA Hot Springs Upgrade Electrical\E_Drawings-Revit\Exports\Revit Upload\241938_VA Hot Springs_Elec Upgrade_01-10-2025.rvt

10/10/2025 12:30:05 PM

CONSULTANTS

CIVIL:
FMG ENGINEERING
3700 STURGIS RD
RAPID CITY, SD 57702-0317
Phone: 605-342-4105
ALEX FISHER

STRUCTURAL:
Albertson Engineering Inc.
ALBERTSON ENGINEERING INC.
3202 W MAIN ST SUITE C
RAPID CITY, SD 57702
Phone: 605-343-9608
STEPHEN KILBER

MEP: WPE # BU24018
WEST PLAINS ENGINEERING, INC.
WEST PLAINS ENGINEERING, INC.
1750 RAND RD
RAPID CITY, SD 57702
Phone: 605-348-7455
DAREN BECKLOFF

DESIGNER OF RECORD

A/E:
STONE GROUP ARCHITECTS
600 EAST 7TH STREET
SIOUX FALLS, SD 57103
605-271-1144
GARRY BLACK
STONE GROUP ARCHITECTS

STAMP
REGISTERED PROFESSIONAL ENGINEER
REG. NO. 9162
DAREN WAYNE BECKLOFF
SOUTH DAKOTA, U.S.A.
5/9/25

Office of Construction and Facilities Management

VA U.S. Department of Veterans Affairs

Drawing Title: BUILDING 10 ELECTRICAL PLANS	Phase: BID - PERMIT SET	Project Title: HOT SPRINGS ELECTRICAL UPGRADE	Project Number: VA #568A4-24-202, SGA #241938
			Building Number: 10, 12 & 64
Approved: DOUG SPRINKLE	FULLY SPRINKLERED	Location: HOT SPRINGS, SD 47747	Drawing Number: E102
FOR OFFICIAL USE ONLY	FOR OFFICIAL USE ONLY	Issue Date: 05-09-2025 / Checked: DWB / Drawn: DWB	

VA FORM 08 - 6231

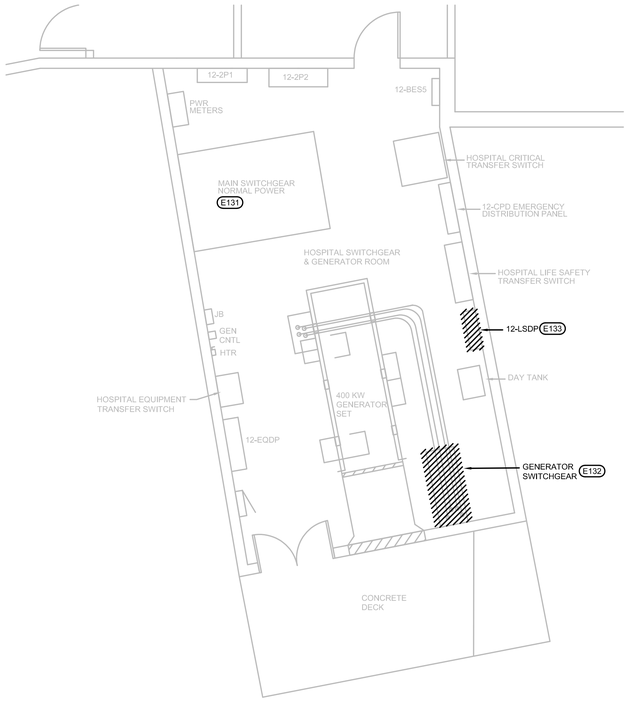

1 **BUILDING 12 ELECTRICAL DEMOLITION PLAN**
1/4" = 1'-0"

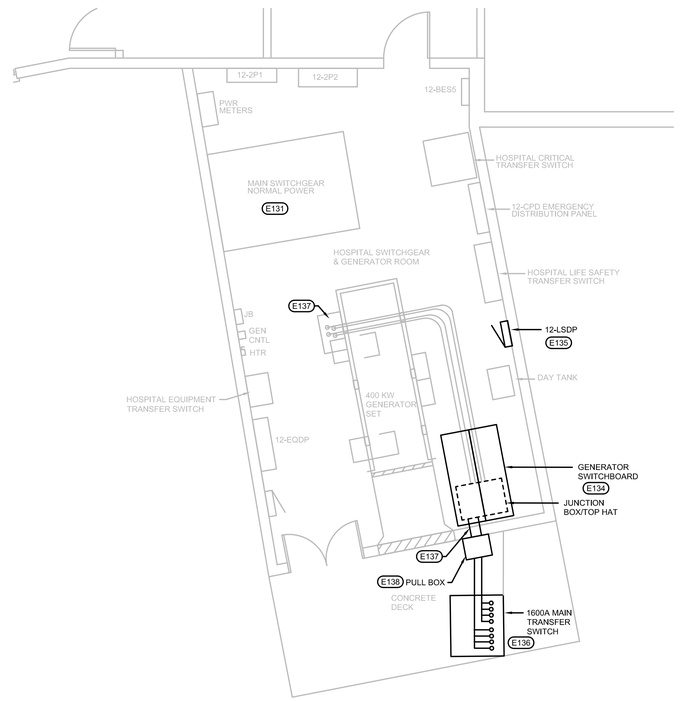

2 **BUILDING 12 ELECTRICAL REMODEL PLAN**
1/4" = 1'-0"

ELECTRICAL MISCELLANEOUS NOTES:

A. ALL INDICATED EQUIPMENT TO BE DEMOLISHED TO BE COMPLETELY DE-ENERGIZED PRIOR TO WORK STARTING.

B. UNLESS SPECIFICALLY NOTED, ALL EQUIPMENT SHOWN IS EXISTING TO REMAIN.

C. EXISTING EQUIPMENT IS SHOWN HALFTONE, EQUIPMENT BEING DEMOLISHED IS SHOWN HATCHED.

D. CONTRACTOR TO FIELD VERIFY THE EXACT SIZE OF EXISTING EQUIPMENT PRIOR TO DEMOLITION. EXISTING ELECTRICAL EQUIPMENT ARE SIZED BASED ON AVAILABE RECORD DRAWINGS.

E. OWNER RETAINS THE RIGHT TO REFUSE POSSESSION OF ANY AND/OR ALL EXISTING INDICATED EQUIPMENT TO BE DEMOLISHED. ANYTHING NOT REQUESTED TO BE SALVAGED BY THE OWNER SHALL BE REMOVED BY CONTRACTOR OFF SITE.

(X) ELECTRICAL SPECIFIC NOTES:

E131 REPLACE EXISTING DRAWOUT STYLE BREAKERS IN NORMAL POWER SWITCHBOARD 12-MDP-1. SEE E-501 FOR SWITCHBOARD SCHEDULES.

E132 EXISTING ELECTRICAL SWITCHBOARD "EMERGENCY GENERATOR" TO BE DISCONNECTED AND REMOVED.

E133 EXISTING ELECTRICAL DISTRIBUTION PANELBOARD "12-LSDP" TO BE DISCONNECTED AND REMOVED.

E134 PROVIDE NEW FLOOR MOUNTED SWITCHBOARD "EMERGENCY GENERATOR".

E135 PROVIDE NEW DISTRIBUTION PANELBOARD "12-LSDP" MOUNTED ON WALL.

E136 PROVIDE NEW 1600A MAINTENANCE TRANSFER SWITCH FOR PORTABLE GENERATOR CONNECTION AND LOAD BANK CONNECTION. ASCO SERIES 300 QUICK CONNECT PANEL DUAL PURPOSE WITH CAMLOCKS. ADD KIRK KEY INTERLOCK BETWEEN GEN BREAKER AND PORTABLE CAM LOCK.

E137 EXTEND CONDUITS AND 1600A FEEDER TO NEW MTS THROUGH JUNCTION BOXES.

E138 PROVIDE OUTDOOR PULL BOX WITH WIREWAY BETWEEN PULL BOX & TOP HAT FOR 2 SETS OF 1600 A CONDUCTORS. PROVIDE SUPPORTS AS NECESSARY FOR CONDUITS.

REVISION #	DESCRIPTION	DATE
01	BID SET	05/09/2025

CONSULTANTS

CIVIL:
FMG ENGINEERING
3700 STURGIS RD
RAPID CITY, SD 57702-0317
Phone: 605-342-4105
ALEX FISHER

STRUCTURAL:
Albertson Engineering Inc.
ALBERTSON ENGINEERING INC.
3202 W MAIN ST SUITE C
RAPID CITY, SD 57702
Phone: 605-343-9606
STEPHEN KILBER

MEP: WPE # BU24018
WEST PLAINS ENGINEERING, INC.
WEST PLAINS ENGINEERING, INC.
1750 RAND RD
RAPID CITY, SD 57702
Phone: 605-348-7455
DAREN BECKLOFF

DESIGNER OF RECORD

A/E:
STONE GROUP ARCHITECTS
600 EAST 7TH STREET
SIOUX FALLS, SD 57103
605-271-1144
GARRY BLACK
STONE GROUP ARCHITECTS

STAMP
REGISTERED PROFESSIONAL ENGINEER
REG. NO. 9162
DAREN WAYNE BECKLOFF
SOUTH DAKOTA
5/9/25

Office of Construction and Facilities Management
VA U.S. Department of Veterans Affairs

Drawing Title: BUILDING 12 ELECTRICAL PLANS	Phase: BID - PERMIT SET	Project Title: HOT SPRINGS ELECTRICAL UPGRADE	Project Number: VA #568A4-24-202, SGA #241938
			Building Number: 10, 12 & 64
Approved: DOUG SPRINKLE	FULLY SPRINKLERED	Location: HOT SPRINGS, SD 47747	Drawing Number: E103
FOR OFFICIAL USE ONLY	FOR OFFICIAL USE ONLY	Issue Date: 05-09-2025 / Checked: DWB / Drawn: DWB	

P:\VA\2024\241938 VA Hot Springs Upgrade Electrical\E_Drawings-Revit\Exports\Revit Upload\241938_VA Hot Springs_Elec Upgrade_01-10-2025.rvt
11/10/2025 12:00:05 PM

VA FORM 08 - 6231

LEGEND

50G OVERCURRENT GROUND RELAY

50/51 OVERCURRENT RELAY, WESTINGHOUSE CO-9, CAT. NO. CO-9H11N, OVERCURRENT 1-12 AMPS, INSTANTANEOUS 6-144 AMPS.

DRAWOUT AIR CIRCUIT BREAKER, WESTINGHOUSE 150DHP500, 1200 AMP

TRIP SETTINGS

FEEDER	CT RATIO	RELAY TAP	TIME DIAL	INST.
A (3 PHASE)	200: 5	4	1.5	20
A (GRD)	200: 5	1.5	7	
B (3 PHASE)	200: 5	4	1.5	20
B (GRD)	200: 5	1.5	7	
BHP PREFERRED SOURCE(3 PHASE)	200: 5	8	3	
BHP PREFERRED SOURCE(GRD)	200: 5	2.5	9	
BHP ALTERNATE SOURCE (3 PHASE)	200: 5	8	3	
BHP ALTERNATE SOURCE (GRD)	200: 5	2.5	9	

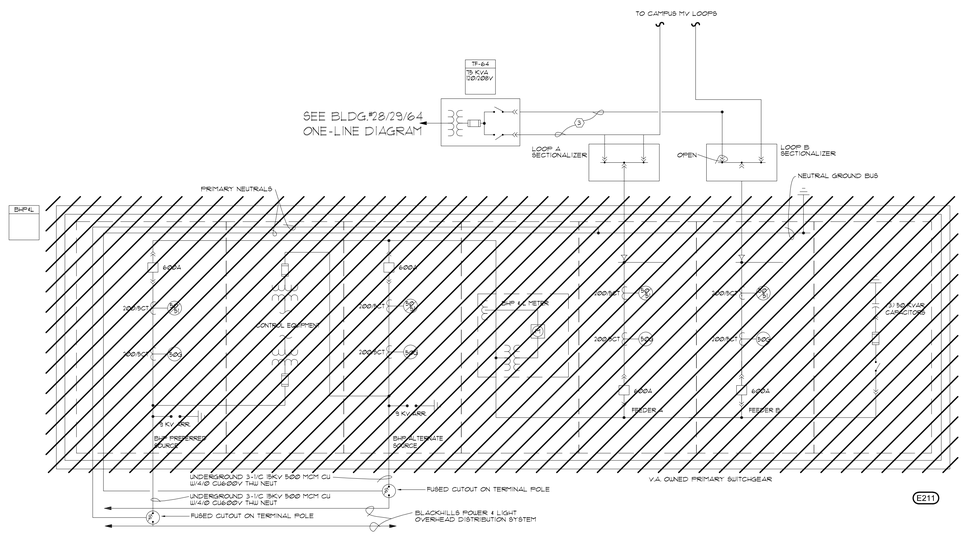

KEY NOTES:

1. ALL PRIMARY CABLE IS 3-1/C * 1/0 CU 15KV XLP WITH 1 * 2 CU 600V THU NEUTRAL UNLESS NOTED OTHERWISE.
2. 3-1/C * 2 CU 15KV XLP WITH 1 * 4 CU 600V THU NEUTRAL
3. 1-1/C * 2 CU 15KV XLP WITH 1 * 4 CU 600V THU NEUTRAL

1 **PRIMARY DISTRIBUTION SYSTEM ONE-LINE - ELECTRICAL DEMOLITION**
NO SCALE

ELECTRICAL MISCELLANEOUS NOTES:

A. ALL INDICATED EQUIPMENT TO BE DEMOLISHED TO BE COMPLETELY DE-ENERGIZED PRIOR TO WORK STARTING.

B. UNLESS SPECIFICALLY NOTED, ALL EQUIPMENT SHOWN IS EXISTING TO REMAIN.

C. EXISTING EQUIPMENT IS SHOWN HALFTONE. EQUIPMENT BEING DEMOLISHED IS SHOWN HATCHED.

D. CONTRACTOR TO FIELD VERIFY THE EXACT SIZE OF EXISTING EQUIPMENT PRIOR TO DEMOLITION. EXISTING ELECTRICAL EQUIPMENT ARE SIZED BASED ON AVAILABE RECORD DRAWINGS.

E. OWNER RETAINS THE RIGHT TO REFUSE POSSESSION OF ANY AND/OR ALL EXISTING INDICATED EQUIPMENT TO BE DEMOLISHED. ANYTHING NOT REQUESTED TO BE SALVAGED BY THE OWNER SHALL BE REMOVED BY CONTRACTOR OFF SITE.

X ELECTRICAL SPECIFIC NOTES:

E211 EXISTING ELECTRICAL MAIN CAMPUS 15KV TO BE DISCONNECTED AND REMOVED.

REVISION #	DESCRIPTION	DATE
01	BID SET	05/09/2025

CONSULTANTS

CIVIL:
FMG ENGINEERING
3700 STURGIS RD
RAPID CITY, SD 57702-0317
Phone: 605-342-4105
ALEX FISHER

STRUCTURAL:
Albertson Engineering Inc.
ALBERTSON ENGINEERING INC.
3202 W MAIN ST SUITE C
RAPID CITY, SD 57702
Phone: 605-343-9606
STEPHEN KILBER

MEP: WPE # BU24018
WEST PLAINS ENGINEERING, INC.
WEST PLAINS ENGINEERING, INC.
1750 RAND RD
RAPID CITY, SD 57702
Phone: 605-348-7455
DAREN BECKLOFF

DESIGNER OF RECORD

A/E:
STONE GROUP ARCHITECTS
600 EAST 7TH STREET
SIOUX FALLS, SD 57103
605-271-1144
GARRY BLACK

STONE GROUP ARCHITECTS

STAMP
REGISTERED PROFESSIONAL ENGINEER
REG. NO. 9162
DAREN WAYNE BECKLOFF
SOUTH DAKOTA
5-9-25

Office of Construction and Facilities Management

VA U.S. Department of Veterans Affairs

Drawing Title	PRIMARY DISTRIBUTION SYSTEM ONE-LINE - ELECTRICAL DEMOLITION
Phase	BID - PERMIT SET
Project Title	HOT SPRINGS ELECTRICAL UPGRADE
Project Number	VA #568A4-24-202 SGA #241938
Building Number	10, 12 & 64
Approved	DOUG SPRINKLE
	FULLY SPRINKLERED
	FOR OFFICIAL USE ONLY
Location	HOT SPRINGS, SD 47747
Issue Date	05-09-2025
Checked	DWB
Drawn	DWB
Drawing Number	E201

VA FORM 08 - 6231

P:\VA\224\241938 VA Hot Springs Upgrade Electrical\E_Drawings-Revit\Exports\Revit Upload\241938_VA Hot Springs_Elec Upgrade_01-10-2025.rvt

1/10/2025 12:00:05 PM

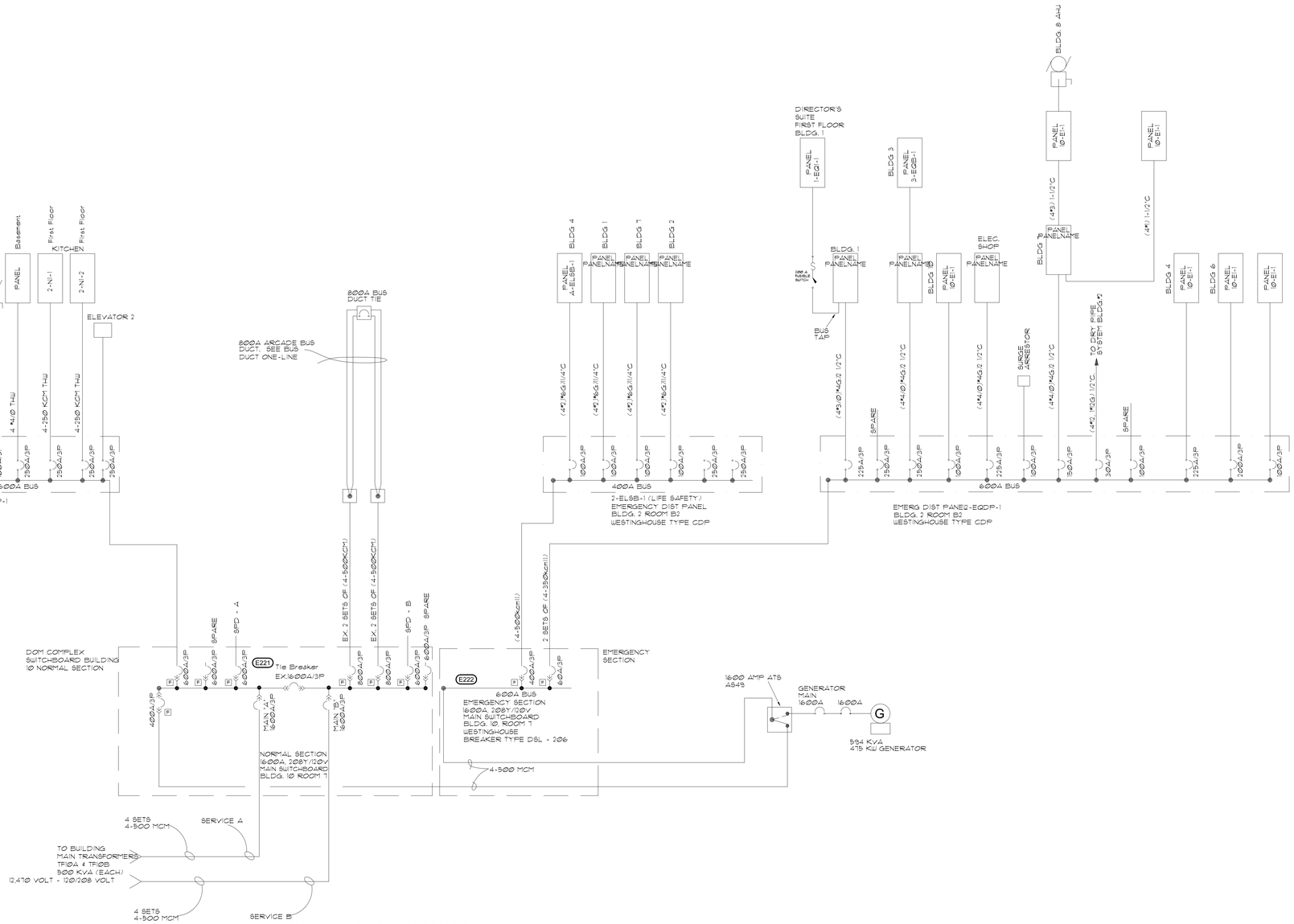

DOMICILIARY MAIN SERVICE.

ELECTRICAL MISCELLANEOUS NOTES:

A. ALL INDICATED EQUIPMENT TO BE DEMOLISHED TO BE COMPLETELY DE-ENERGIZED PRIOR TO WORK STARTING.

B. UNLESS SPECIFICALLY NOTED, ALL EQUIPMENT SHOWN IS EXISTING TO REMAIN.

C. EXISTING EQUIPMENT IS SHOWN HALFTONE. EQUIPMENT BEING DEMOLISHED IS SHOWN HATCHED.

D. CONTRACTOR TO FIELD VERIFY THE EXACT SIZE OF EXISTING EQUIPMENT PRIOR TO DEMOLITION. EXISTING ELECTRICAL EQUIPMENT ARE SIZED BASED ON AVAILABE RECORD DRAWINGS.

E. OWNER RETAINS THE RIGHT TO REFUSE POSSESSION OF ANY AND/OR ALL EXISTING INDICATED EQUIPMENT TO BE DEMOLISHED. ANYTHING NOT REQUESTED TO BE SALVAGED BY THE OWNER SHALL BE REMOVED BY CONTRACTOR OFF SITE.

(X) ELECTRICAL SPECIFIC NOTES:

E221 REPLACE EXISTING DRAWOUT STYLE BREAKERS IN NORMAL POWER SWITCHBOARD 10-MDP-1. SEE E-501 FOR SWITCHBOARD SCHEDULE.

E222 REPLACE EXISTING DRAWOUT STYLE BREAKERS IN EMERGENCY POWER SWITCHBOARD 10-MDP-2. SEE E-501 FOR SWITCHBOARD SCHEDULE.

(1) BUILDING 10 DOMICILIARY MAIN SERVICE - ELECTRICAL DEMOLITION

NO SCALE

REVISION #	DESCRIPTION	DATE
01	BID SET	05/09/2025

CONSULTANTS

CIVIL:
FMG ENGINEERING
3700 STURGIS RD
RAPID CITY, SD 57702-0317
Phone: 605-342-4105
ALEX FISHER

STRUCTURAL:
Albertson Engineering Inc.
ALBERTSON ENGINEERING INC.
3202 W MAIN ST SUITE C
RAPID CITY, SD 57702
Phone: 605-343-9606
STEPHEN KILBER

MEP: WPE # BU24018
WEST PLAINS ENGINEERING, INC.
1750 RAND RD
RAPID CITY, SD 57702
Phone: 605-348-7455
DAREN BECKLOFF

DESIGNER OF RECORD

A/E:
STONE GROUP ARCHITECTS
600 EAST 7TH STREET
SIOUX FALLS, SD 57103
605-271-1144
GARRY BLACK

STONE GROUP ARCHITECTS

STAMP

REGISTERED PROFESSIONAL ENGINEER
REG. NO. 9163
DAREW WAYNE BECKLOFF
SOUTH DAKOTA
5/9/25

Office of Construction and Facilities Management

VA U.S. Department of Veterans Affairs

Drawing Title	BUILDING 10 DOMICILIARY MAIN SERVICE - ELECTRICAL DEMOLITION
Phase	BID - PERMIT SET
Project Title	HOT SPRINGS ELECTRICAL UPGRADE
Project Number	VA #568A4-24-202 SGA #241938
Building Number	10, 12 & 64
Approved	DOUG SPRINKLE
	FOR OFFICIAL USE ONLY
	FULLY SPRINKLERED
	FOR OFFICIAL USE ONLY
Location	HOT SPRINGS, SD 47747
Issue Date	05-09-2025
Checked	DWB
Drawn	DWB
Drawing Number	E202

VA FORM 08 - 6231

P:\VA\2024\241938 VA Hot Springs Upgrade Electrical\E_Drawings-Revit\Exports\Revit Upload\241938_VA Hot Springs_Elec Upgrade_01-15-2025.rvt

1/15/2025 12:00:05 PM

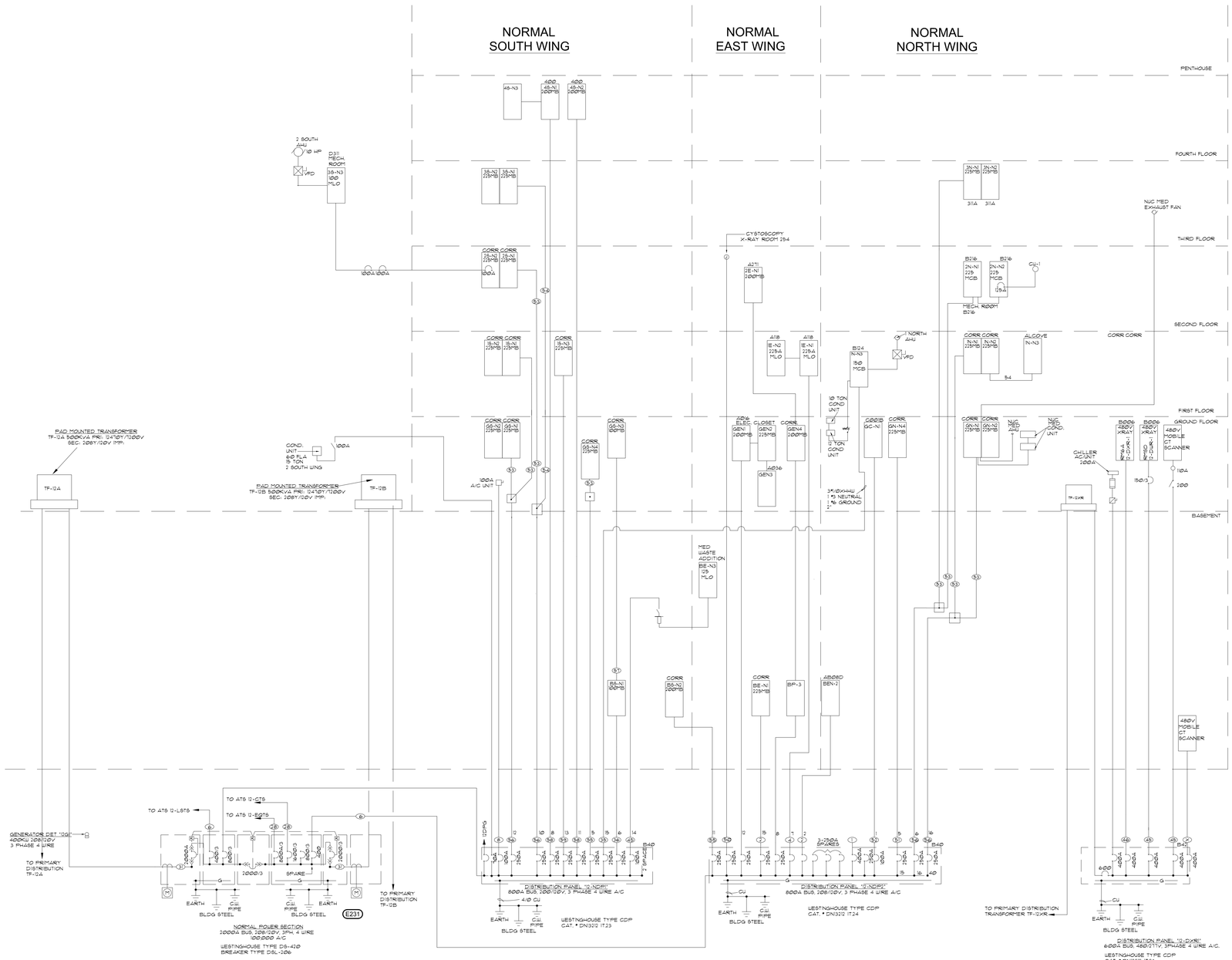

ELECTRICAL MISCELLANEOUS NOTES:

A. ALL INDICATED EQUIPMENT TO BE DEMOLISHED TO BE COMPLETELY DE-ENERGIZED PRIOR TO WORK STARTING.

B. UNLESS SPECIFICALLY NOTED, ALL EQUIPMENT SHOWN IS EXISTING TO REMAIN.

C. EXISTING EQUIPMENT IS SHOWN HALFTONE. EQUIPMENT BEING DEMOLISHED IS SHOWN HATCHED.

D. CONTRACTOR TO FIELD VERIFY THE EXACT SIZE OF EXISTING EQUIPMENT PRIOR TO DEMOLITION. EXISTING ELECTRICAL EQUIPMENT ARE SIZED BASED ON AVAILABE RECORD DRAWINGS.

E. OWNER RETAINS THE RIGHT TO REFUSE POSSESSION OF ANY AND/OR ALL EXISTING INDICATED EQUIPMENT TO BE DEMOLISHED. ANYTHING NOT REQUESTED TO BE SALVAGED BY THE OWNER SHALL BE REMOVED BY CONTRACTOR OFF SITE.

(X) ELECTRICAL SPECIFIC NOTES:

E231 REPLACE EXISTING DRAWOUT STYLE BREAKERS IN NORMAL POWER SWITCHBOARD 12-MDP-1. SEE E-501 FOR SWITCHBOARD SCHEDULE.

FEEDER SCHEDULE

KEY	SETS	CONDUCTORS NO	SIZE	NUETRAL	GND	TYPE	CONDUIT	NOTES
1	2	3	4/0	4/0	#2 AWG	THW	2-1/2"	
2	1	3	#14AWG	#14AWG	#8 AWG	THW	1-1/4"	
3	1	3	#1AWG	#1AWG	#6AWG	THW	2"	
4	1	3	3/0	3/0	#4	THW	2-1/2"	
5	2	3	500MCM	500MCM	2/0	THW	WIREWAY	
6	1	3	500MCM	500MCM		THW	3-1/2"	
7	2	3	500MCM	500MCM	2/0	THW	3-1/2"	
8	1	3	#2 AWG	#8 AWG		THW	2"	
9	1	3	2/0	2/0	#4 AWG		1 1/4"	
10	1	3	#2AWG	#2AWG		USE	2"	
11	1	3	#2AWG	#2AWG		USE	2-1/2"	
12	1	3	#2AWG	#2AWG		TW	2"	
13	1	3	#8AWG	#4AWG		THW	1-1/2"	
14	1	3	#4AWG	#4AWG		THW	2"	
15	1	3	#2AWG	#2AWG		TW	1-1/2"	
16	1	3	1/0		#4		1 1/2"	
17	1	3	#1AWG	#1AWG	#8AWG	THW	1-1/2"	
18	1	3	350MCM	350MCM		THW	3-1/2"	
19	2	3	500MCM	500MCM		XHHW	3"	
20	1	3	4/0			THW	2"	
21	1	3	4/0			RH	2-1/2"	
22	2	3	250MCM			RH	3"	
23	1	3	3/0			RH	2"	
24	1	3	4/0	4/0		XHHW		
25	1	3	1/0	1/0			2"	
26	1	3	#2 AWG	#2 AWG	#8 AWG	THW	2"	
27	1	3	500MCM	500MCM	#3 AWG	XHHW	3-1/2"	
28	2	3	500MCM	500MCM	1/0	XHHW	3-1/2"	
29	1	3	500MCM			RHW	3"	
30	2	3	350MCM	350MCM		THW	3"	
31	4	3	500MCM	500MCM		XHHW	3"	1-3" MT
32	4	3	500MCM	500MCM	4/0	XHHW	3-1/2"	
33	1	3	#2 AWG	#2 AWG		TW	1-1/4"	
34	1	3	4/0			THHN	2-1/2"	
35	1	3	4/0	4/0		THW	3"	
36	1	3	250MCM	250MCM		THW	2 1/2"	
37	1	3	1/0	1/0	#8 AWG	THW	2"	
38	1	3	500MCM	500MCM		XHHW	3"	
39	1	3	400MCM	400MCM		RH	3"	
40	1	3	#3 AWG		#8 AWG	THW	2"	
41	1	3	350MCM			THW	2-1/2"	
42	1	3	1/0			THW/TW	2"	
43	1	3	#3 AWG	#2 AWG	#6 AWG	TW		
44	1	3	#6 AWG			TW		
45	1	3	1/0	#8		THW/TW	2"	
46	1	3	3/0			THW	2"	
47	1	3	2/0	2/0		TW	2"	
48	1	3	4/0	4/0		TW	3"	
49	1	3	4/0	4/0		THW	3"	
50	1	2	350MCM	#6 AWG	#6 AWG	THW	2"	
51	1	3	4/0	4/0	#4	TW	2"	
52	1	3	#4 AWG			TW	2"	
53	1	3	4/0	4/0	#4	THW	2-1/2"	
54	1	3	4/0	4/0		TW	2-1/2"	
55	1	3	3/0	3/0	#6 AWG	XHHW/THW	2"	
56	1	3	250	250	#4 AWG		2 1/2"	
57	1	3	250	250			2"	
58	1	3	250	250			2"	
59	1	3	3/0	4/0		THW	3"	
60	1	3	4/0	4/0	#4	XHHW	2 1/2"	
61	1	3	1	1	#8	THHN	1 1/2"	
62	1	3	4		#8	THHN	1 1/2"	

1 BUILDING 12 NORMAL SYSTEM RISER DIAGRAM - ELECTRICAL DEMOLITION

NO SCALE

REVISION #	DESCRIPTION	DATE
01	BID SET	05/09/2025

P:\VA\20\24241938 VA Hot Springs Upgrade Electrical\E_Drawings-Revit\Exports\Revit Upload\241938_VA Hot Springs_Elec Upgrade_R-15-2025.rvt

1/15/2025 12:30:05 PM

CONSULTANTS

CIVIL:
FMG ENGINEERING
FMG ENGINEERING
3700 STURGIS RD
RAPID CITY, SD 57702-0317
Phone: 605-342-4105
ALEX FISHER

STRUCTURAL:
Albertson Engineering Inc.
ALBERTSON ENGINEERING INC.
3202 W MAIN ST SUITE C
RAPID CITY, SD 57702
Phone: 605-343-9606
STEPHEN KILBER

MEP: WPE # BU24018
WPE WEST PLAINS ENGINEERING, INC.
WEST PLAINS ENGINEERING, INC.
1750 RAND RD
RAPID CITY, SD 57702
Phone: 605-348-7455
DAREN BECKLOFF

DESIGNER OF RECORD

A/E:
STONE GROUP ARCHITECTS
600 EAST 7TH STREET
SIOUX FALLS, SD 57103
605-271-1144
GARRY BLACK

STONE GROUP ARCHITECTS

STAMP

REGISTERED PROFESSIONAL ENGINEER
REG. NO. 9163
DAREN WAYNE BECKLOFF
SOUTH DAKOTA
5/9/25

Office of Construction and Facilities Management

VA U.S. Department of Veterans Affairs

Drawing Title BUILDING 12 - NORMAL SYSTEM RISER DIAGRAM - ELECTRICAL DEMOLITION	**Phase** BID - PERMIT SET
Approved DOUG SPRINKLE	FULLY SPRINKLERED
FOR OFFICIAL USE ONLY	FOR OFFICIAL USE ONLY

Project Title HOT SPRINGS ELECTRICAL UPGRADE

Project Number VA #568A4-24-202 SGA #241938

Building Number 10, 12 & 64

Location HOT SPRINGS, SD 47747

Issue Date 05-09-2025 | **Checked** DWB | **Drawn** DWB

Drawing Number E203

VA FORM 08 - 6231

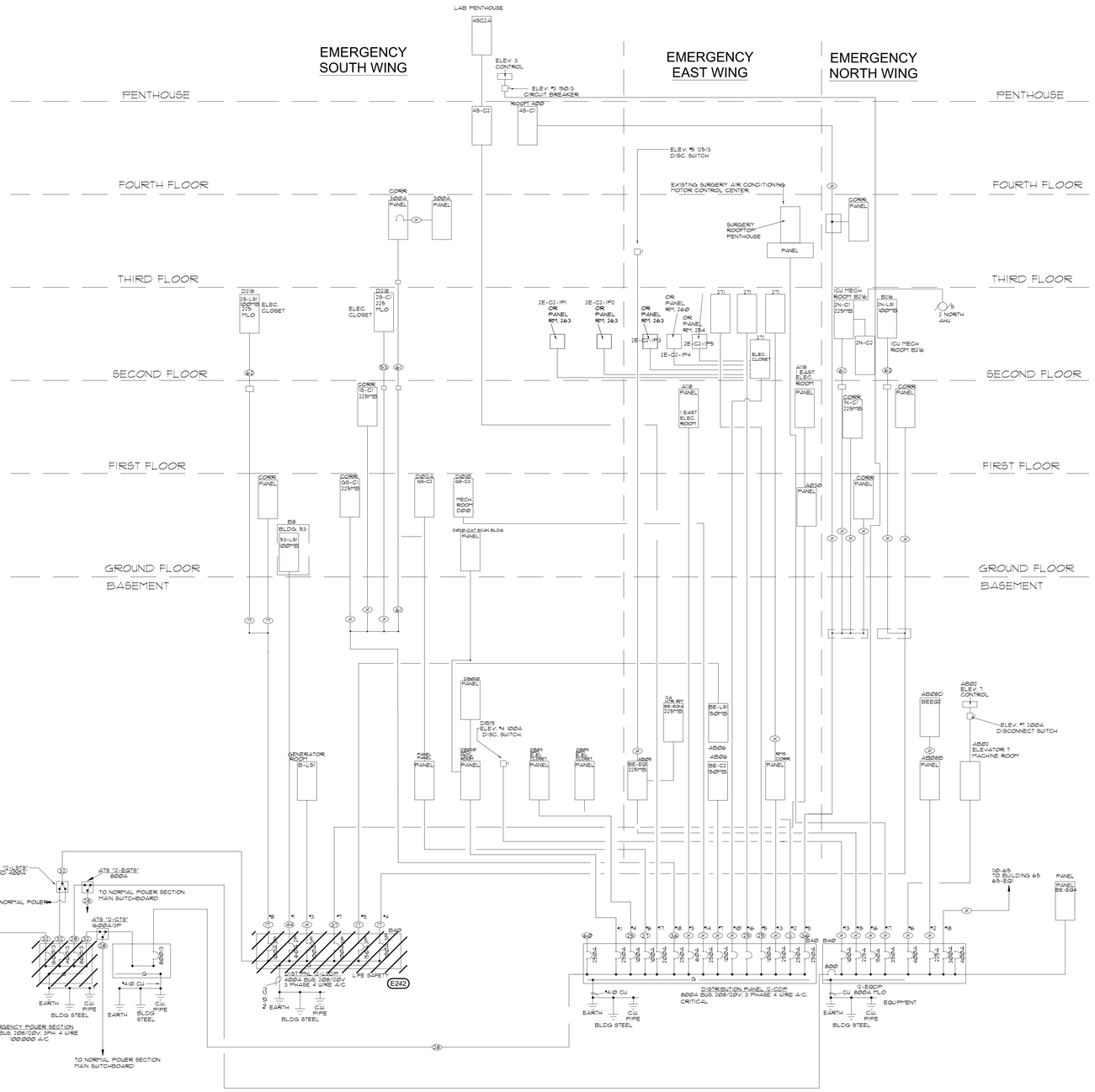

1 **BUILDING 12 EMERGENCY SYSTEM RISER DIAGRAM - ELECTRICAL DEMOLITION**
NO SCALE

ELECTRICAL MISCELLANEOUS NOTES:

A. ALL INDICATED EQUIPMENT TO BE DEMOLISHED TO BE COMPLETELY DE-ENERGIZED PRIOR TO WORK STARTING.

B. UNLESS SPECIFICALLY NOTED, ALL EQUIPMENT SHOWN IS EXISTING TO REMAIN.

C. EXISTING EQUIPMENT IS SHOWN HALFTONE. EQUIPMENT BEING DEMOLISHED IS SHOWN HATCHED.

D. CONTRACTOR TO FIELD VERIFY THE EXACT SIZE OF EXISTING EQUIPMENT PRIOR TO DEMOLITION. EXISTING ELECTRICAL EQUIPMENT ARE SIZED BASED ON AVAILABE RECORD DRAWINGS.

E. OWNER RETAINS THE RIGHT TO REFUSE POSSESSION OF ANY AND/OR ALL EXISTING INDICATED EQUIPMENT TO BE DEMOLISHED. ANYTHING NOT REQUESTED TO BE SALVAGED BY THE OWNER SHALL BE REMOVED BY CONTRACTOR OFF SITE.

X ELECTRICAL SPECIFIC NOTES:

E241 EXISTING ELECTRICAL SWITCHBOARD "EMERGENCY GENERATOR" TO BE DISCONNECTED AND REMOVED.

E242 EXISTING ELECTRICAL DISTRIBUTION PANELBOARD "12-LSDP" TO BE DISCONNECTED AND REMOVED.

FEEDER SCHEDULE

KEY	SETS	CONDUCTOR NO.	CONDUCTOR SIZE	NUETRAL	GND	TYPE	CONDUIT	NOTES
1	2	3	4/0	4/0	#2 AWG	THW	2-1/2"	
2	1	3	#4AWG	#4AWG	#8 AWG	THW	1-1/4"	
3	1	3	#1AWG	#1AWG	#6AWG	THW	2"	
4	1	3	3/0	3/0	#4	THW	2-1/2"	
5	2	3	500MCM	500MCM	2/0	THW	UNEQUAL	
6	1	3	500MCM	500MCM		THW	3-1/2"	
7	2	3	500MCM	500MCM	2/0	THW	3-1/2"	
8	1	3	#2 AWG	#8 AWG		THW	2"	
9	1	3	2/0	2/0	#4 AWG		1 1/4"	
10	1	3	#4AWG	#4AWG		USE	2"	
11	1	3	#1AWG	#1AWG		USE	2-1/2"	
12	1	3	#1AWG	#1AWG		TW	2"	
13	1	3	#8AWG		#4AWG	THW	1-1/2"	
14	1	3	#4AWG	#4AWG		THW	2"	
15	1	3	#1AWG	#1AWG		TW	1-1/2"	
16	1	3	1/0		#4		1 1/2"	
17	1	3	#1AWG	#1AWG	#8AWG	THW	1-1/2"	
18	1	3	350MCM	350MCM		THW	3-1/2"	
19	2	3	500MCM	500MCM		XHHW	3"	
20	1	3	4/0			THW	2"	
21	1	3	4/0			RH	2-1/2"	
22	2	3	250MCM			RH	3"	
23	1	3	3/0			RH	2"	
24	1	3	4/0	4/0		XHHW		
25	1	3	1/0	1/0			2"	
26	1	3	#2 AWG	#2 AWG	#8 AWG	THW	2"	
27	1	3	500MCM	500MCM	#2 AWG	XHHW	3-1/2"	
28	2	3	500MCM	500MCM	1/0	XHHW	3-1/2"	
29	1	3	500MCM			RHW	3"	
30	2	3	350MCM	350MCM		THW	3"	
31	4	3	500MCM	500MCM		XHHW	3"	1-3" MT
32	4	3	500MCM	500MCM	4/0	XHHW	3-1/2"	
33	1	3	#2 AWG	#2 AWG		TW	1-1/4"	
34	1	3	4/0			THHN	2-1/2"	
35	1	3	4/0	4/0		THW	3"	
36	1	3	250MCM	250MCM		THW	2 1/2"	
37	1	3	1/0	1/0	#8 AWG	THW	2"	
38	1	3	500MCM	500MCM		XHHW	3"	
39	1	3	400MCM	400MCM		RH	3"	
40	1	3	#2 AWG		#8 AWG	THW	2"	
41	1	3	350MCM			THW	2-1/2"	
42	1	3	1/0			THW/TW	2"	
43	1	3	#2 AWG	#2 AWG	#6 AWG	TW		
44	1	3	#6 AWG			TW		
45	1	3	1/0	#8		THW/TW	2"	
46	1	3	3/0			THW	2"	
47	1	3	2/0	2/0		TW	2"	
48	1	3	4/0	4/0		TW	3"	
49	1	3	4/0	4/0		THW	2"	
50	1	2	350MCM	#6 AWG	#6 AWG	THW	2"	
51	1	3	4/0	4/0	#4	TW	2"	
52	1	3	#4 AWG			TW	2"	
53	1	3	4/0	4/0	#4	THW	2-1/2"	
54	1	3	4/0	4/0		TW	2-1/2"	
55	1	3	3/0	3/0	#6 AWG	XHHW/THW	2"	
56	1	3	250	250	#4 AWG		2 1/2"	
57	1	3	250	250			2"	
58	1	3	250	250			2"	
59	1	3	3/0	4/0		THW	3"	
60	1	3	4/0			THW		
61	1	3	4/0	4/0	4	XHHW	2 1/2"	
62	1	3	1	1	8	THHN	1 1/2"	

REVISION #	DESCRIPTION	DATE
01	BID SET	05/09/2025

CONSULTANTS

CIVIL:
FMG ENGINEERING
3700 STURGIS RD
RAPID CITY, SD 57702-0317
Phone: 605-342-4105
ALEX FISHER

STRUCTURAL:
Albertson Engineering Inc.
ALBERTSON ENGINEERING INC.
3202 W MAIN ST SUITE C
RAPID CITY, SD 57702
Phone: 605-343-9606
STEPHEN KILBER

MEP: WPE # BU24018
WEST PLAINS ENGINEERING, INC.
WEST PLAINS ENGINEERING, INC.
1750 RAND RD
RAPID CITY, SD 57702
Phone: 605-348-7455
DAREN BECKLOFF

DESIGNER OF RECORD

A/E:
STONE GROUP ARCHITECTS
600 EAST 7TH STREET
SIOUX FALLS, SD 57103
605-271-1144
GARRY BLACK
STONE GROUP ARCHITECTS

STAMP
REGISTERED PROFESSIONAL ENGINEER
REG. NO. 9162
DAREN WAYNE BECKLOFF
SOUTH DAKOTA
5/9/25

Office of Construction and Facilities Management

VA U.S. Department of Veterans Affairs

Drawing Title BUILDING 12 EMERGENCY SYSTEM RISER DIAGRAM - ELECTRICAL DEMOLITION	**Phase** BID - PERMIT SET	**Project Title** HOT SPRINGS ELECTRICAL UPGRADE	**Project Number** VA #568A4-24-202 SGA #241938
			Building Number 10, 12 & 64
Approved DOUG SPRINKLE	FULLY SPRINKLERED	**Location** HOT SPRINGS, SD 47747	**Drawing Number** E204
FOR OFFICIAL USE ONLY	FOR OFFICIAL USE ONLY	**Issue Date** 05-09-2025 / **Checked** DWB / **Drawn** DWB	

VA FORM 08 - 6231

P:\VA\224241938 VA Hot Springs Upgrade Electrical\E_Drawings-Revit\Exports\Revit Upload\241938_VA Hot Springs_Elec Upgrade_01-15-2025.rvt

1/15/2025 12:00:05 PM

ELECTRICAL MISCELLANEOUS NOTES:

A. ALL INDICATED EQUIPMENT TO BE DEMOLISHED TO BE COMPLETELY DE-ENERGIZED PRIOR TO WORK STARTING.

B. UNLESS SPECIFICALLY NOTED, ALL EQUIPMENT SHOWN IS EXISTING TO REMAIN.

C. EXISTING EQUIPMENT IS SHOWN HALFTONE. EQUIPMENT BEING DEMOLISHED IS SHOWN HATCHED.

D. CONTRACTOR TO FIELD VERIFY THE EXACT SIZE OF EXISTING EQUIPMENT PRIOR TO DEMOLITION. EXISTING ELECTRICAL EQUIPMENT ARE SIZED BASED ON AVAILABE RECORD DRAWINGS.

E. OWNER RETAINS THE RIGHT TO REFUSE POSSESSION OF ANY AND/OR ALL EXISTING INDICATED EQUIPMENT TO BE DEMOLISHED. ANYTHING NOT REQUESTED TO BE SALVAGED BY THE OWNER SHALL BE REMOVED BY CONTRACTOR OFF SITE.

(X) ELECTRICAL SPECIFIC NOTES:

E311 PROVIDE NEW 15KV MAIN CAMPUS SWITCHGEAR IN NEW BUILDING.

E312 PROVIDE NEW MV CABLING SIZED AS SHOWN

E313 CAPACITORS TO BE MOUNTED ON TOP OF SWITCHGEAR. CONNECT WITH (3#4+G) 15KV CABLE TO TERMINATIONS ON CAPACITOR

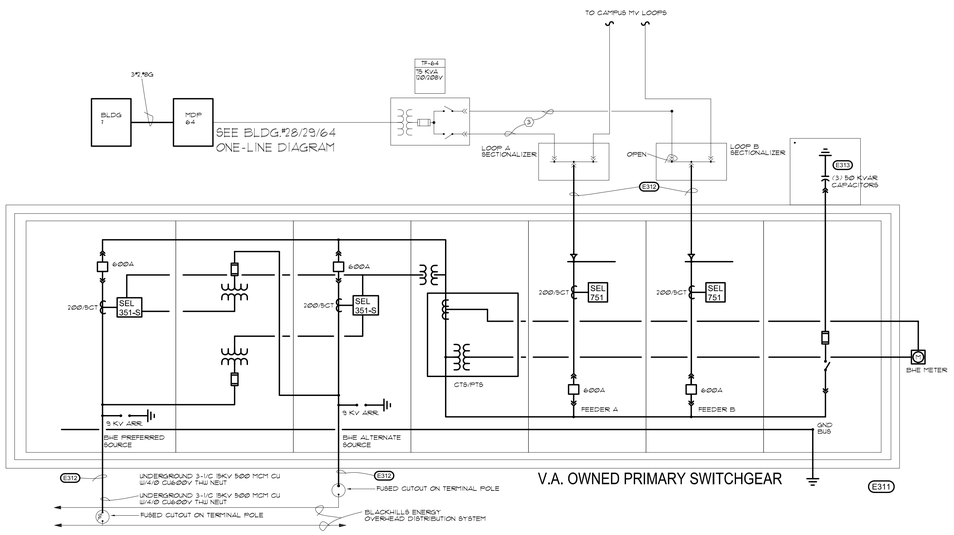

1 **PRIMARY DISTRIBUTION SYSTEM ONE-LINE - ELECTRICAL REMODEL**
NO SCALE

REVISION #	DESCRIPTION	DATE
01	BID SET	05/09/2025

CONSULTANTS

CIVIL:
FMG ENGINEERING
3700 STURGIS RD
RAPID CITY, SD 57702-0317
Phone: 605-342-4105
ALEX FISHER

STRUCTURAL:
Albertson Engineering Inc.
ALBERTSON ENGINEERING INC.
3202 W MAIN ST SUITE C
RAPID CITY, SD 57702
Phone: 605-343-9606
STEPHEN KILBER

MEP: WPE # BU24018
WEST PLAINS ENGINEERING, INC.
WEST PLAINS ENGINEERING, INC.
1750 RAND RD
RAPID CITY, SD 57702
Phone: 605-348-7455
DAREN BECKLOFF

DESIGNER OF RECORD

A/E:
STONE GROUP ARCHITECTS
600 EAST 7TH STREET
SIOUX FALLS, SD 57103
605-271-1144
GARRY BLACK

STONE GROUP ARCHITECTS

STAMP

REGISTERED PROFESSIONAL ENGINEER
9162
DAREN WAYNE BECKLOFF
SOUTH DAKOTA
5/9/25

Office of Construction and Facilities Management

VA U.S. Department of Veterans Affairs

Drawing Title: PRIMARY DISTRIBUTION SYSTEM ONE-LINE - ELECTRICAL REMODEL	Phase: BID - PERMIT SET	Project Title: HOT SPRINGS ELECTRICAL UPGRADE	Project Number: VA #568A4-24-202 SGA #241938
			Building Number: 10, 12 & 64
Approved: DOUG SPRINKLE	FULLY SPRINKLERED	Location: HOT SPRINGS, SD 47747	Drawing Number: E301
	FOR OFFICIAL USE ONLY	Issue Date: 05-09-2025 / Checked: DWB / Drawn: DWB	

FOR OFFICIAL USE ONLY

VA FORM 08 - 6231

P:\VA\2024\241938 VA Hot Springs Upgrade Electrical\E_Drawings-Revit\Exports\Revit Upload\241938_VA Hot Springs_Elec Upgrade_01-10-2025.rvt

11/10/2025 12:00:05 PM

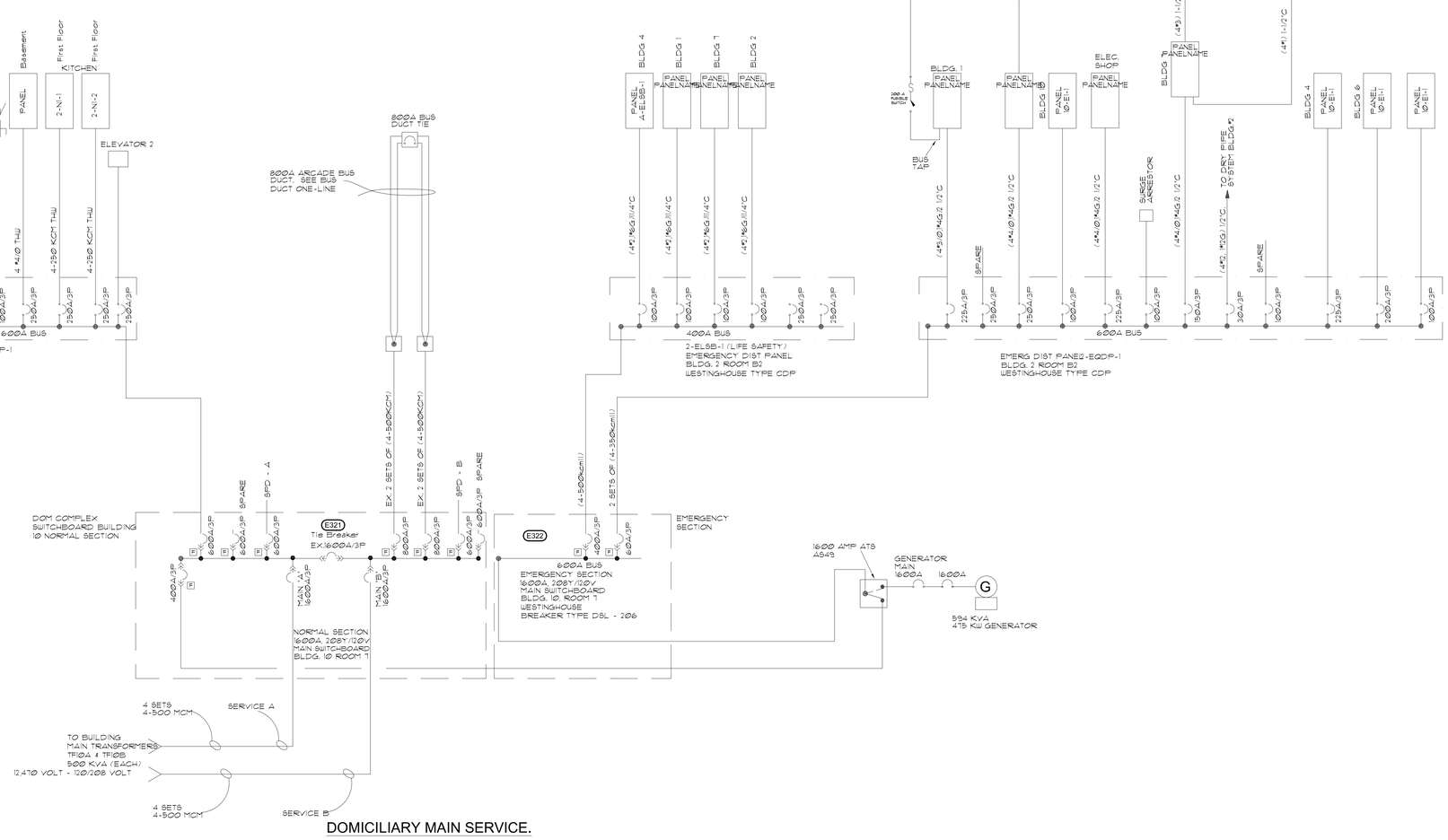

DOMICILIARY MAIN SERVICE.

1 BUILDING 10 DOMICILIARY MAIN SERVICE - ELECTRICAL REMODEL
NO SCALE

ELECTRICAL MISCELLANEOUS NOTES:

A. ALL INDICATED EQUIPMENT TO BE DEMOLISHED TO BE COMPLETELY DE-ENERGIZED PRIOR TO WORK STARTING.

B. UNLESS SPECIFICALLY NOTED, ALL EQUIPMENT SHOWN IS EXISTING TO REMAIN.

C. EXISTING EQUIPMENT IS SHOWN HALFTONE. EQUIPMENT BEING DEMOLISHED IS SHOWN HATCHED.

D. CONTRACTOR TO FIELD VERIFY THE EXACT SIZE OF EXISTING EQUIPMENT PRIOR TO DEMOLITION. EXISTING ELECTRICAL EQUIPMENT ARE SIZED BASED ON AVAILABLE RECORD DRAWINGS.

E. OWNER RETAINS THE RIGHT TO REFUSE POSSESSION OF ANY AND/OR ALL EXISTING INDICATED EQUIPMENT TO BE DEMOLISHED. ANYTHING NOT REQUESTED TO BE SALVAGED BY THE OWNER SHALL BE REMOVED BY CONTRACTOR OFF SITE.

X ELECTRICAL SPECIFIC NOTES:

E321 REPLACE EXISTING DRAWOUT STYLE BREAKERS IN NORMAL POWER SWITCHBOARD 10-MDP-1 WITH NEW STYLE EATON DS TYPE. NEW BREAKERS TO BE RATED AT 65KAIC MIN. SEE E-501 FOR SWITCHBOARD SCHEDULE AND NOTES ON REPLACEMENT.

E322 REPLACE EXISTING DRAWOUT STYLE BREAKERS IN EMERGENCY POWER SWITCHBOARD 10-MDP-2 WITH NEW STYLE EATON DS TYPE. NEW BREAKERS TO BE RATED AT 65KAIC MIN. SEE E-501 FOR SWITCHBOARD SCHEDULE AND NOTES ON REPLACEMENT.

REVISION #	DESCRIPTION	DATE
01	BID SET	05/09/2025

CONSULTANTS

CIVIL:
FMG ENGINEERING
3700 STURGIS RD
RAPID CITY, SD 57702-0317
Phone: 605-342-4105
ALEX FISHER

STRUCTURAL:
Albertson Engineering Inc.
ALBERTSON ENGINEERING INC.
3202 W MAIN ST SUITE C
RAPID CITY, SD 57702
Phone: 605-343-9606
STEPHEN KILBER

MEP: WPE # BU24018
WEST PLAINS ENGINEERING, INC.
WEST PLAINS ENGINEERING, INC.
1750 RAND RD
RAPID CITY, SD 57702
Phone: 605-348-7455
DAREN BECKLOFF

DESIGNER OF RECORD

A/E:
STONE GROUP ARCHITECTS
600 EAST 7TH STREET
SIOUX FALLS, SD 57103
605-271-1144
GARRY BLACK
STONE GROUP ARCHITECTS

STAMP

REGISTERED PROFESSIONAL ENGINEER
REG. NO. 9163
DAREN WAYNE BECKLOFF
SOUTH DAKOTA
5/9/25

Office of Construction and Facilities Management

VA U.S. Department of Veterans Affairs

Drawing Title: BUILDING 10 DOMICILIARY MAIN SERVICE - ELECTRICAL REMODEL	Phase: BID - PERMIT SET	Project Title: HOT SPRINGS ELECTRICAL UPGRADE	Project Number: VA #568A4-24-202 SGA #241938
			Building Number: 10, 12 & 64
Approved: DOUG SPRINKLE	FULLY SPRINKLERED	Location: HOT SPRINGS, SD 47747	Drawing Number: E302
FOR OFFICIAL USE ONLY	FOR OFFICIAL USE ONLY	Issue Date: 05-09-2025 / Checked: DWB / Drawn: DWB	

VA FORM 08 - 6231

P:\VA\2026\24\1938 VA Hot Springs Upgrade Electrical\E_Drawings-Revit\Exports\Revit Upload\241938_VA Hot Springs_Elec Upgrade_R-10-2025.rvt

1/10/2025 12:30:05 PM

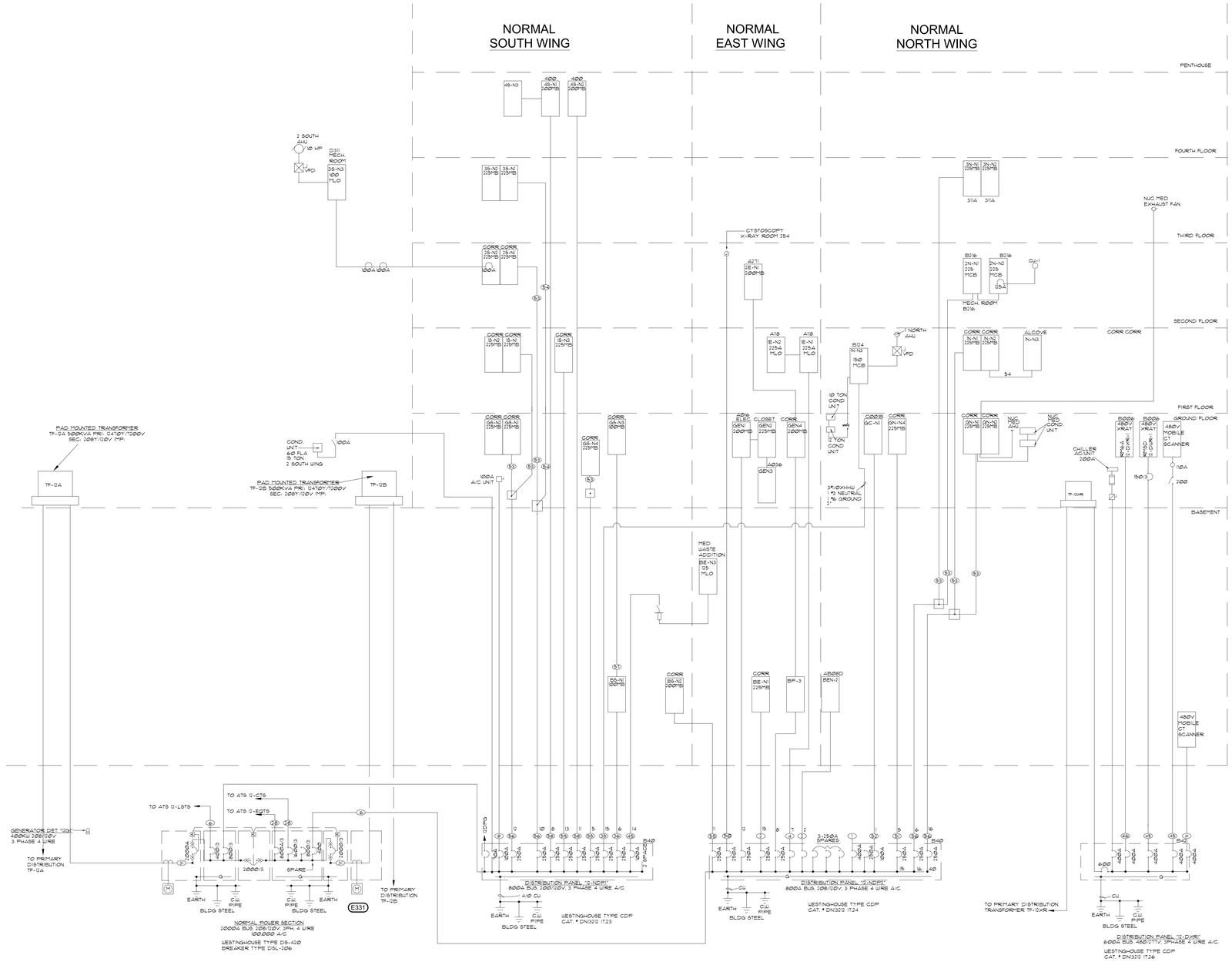

1 **BUILDING 12 NORMAL SYSTEM RISER DIAGRAM - ELECTRICAL REMODEL**
NO SCALE

ELECTRICAL MISCELLANEOUS NOTES:

A. ALL INDICATED EQUIPMENT TO BE DEMOLISHED TO BE COMPLETELY DE-ENERGIZED PRIOR TO WORK STARTING.

B. UNLESS SPECIFICALLY NOTED, ALL EQUIPMENT SHOWN IS EXISTING TO REMAIN.

C. EXISTING EQUIPMENT IS SHOWN HALFTONE. EQUIPMENT BEING DEMOLISHED IS SHOWN HATCHED.

D. CONTRACTOR TO FIELD VERIFY THE EXACT SIZE OF EXISTING EQUIPMENT PRIOR TO DEMOLITION. EXISTING ELECTRICAL EQUIPMENT ARE SIZED BASED ON AVAILABE RECORD DRAWINGS.

E. OWNER RETAINS THE RIGHT TO REFUSE POSSESSION OF ANY AND/OR ALL EXISTING INDICATED EQUIPMENT TO BE DEMOLISHED. ANYTHING NOT REQUESTED TO BE SALVAGED BY THE OWNER SHALL BE REMOVED BY CONTRACTOR OFF SITE.

(X) **ELECTRICAL SPECIFIC NOTES:**

E331 REPLACE EXISTING DRAWOUT STYLE BREAKERS IN NORMAL POWER SWITCHBOARD 12-MDP-1 WITH NEW STYLE EATON DS TYPE. NEW BREAKERS TO BE RATED AT 65KAIC MIN. SEE E-501 FOR SWITCHBOARD SCHEDULE AND NOTES ON REPLACEMENT.

FEEDER SCHEDULE

KEY	SETS	CONDUCTOR NO.	CONDUCTOR SIZE	NEUTRAL	GND	TYPE	CONDUIT	NOTES
1	2	3	4/0	4/0	#2 AWG	THW	2-1/2"	
2	1	3	#4AWG	#4AWG	#8 AWG	THW	1-1/4"	
3	1	3	#4AWG	#4AWG	#8 AWG	THW	2"	
4	1	3	3/0	3/0	#4	THW	2-1/2"	
5	2	3	500MCM	500MCM	2/0	THW	WIREWAY	
6	1	3	500MCM	500MCM		THW	3-1/2"	
7	2	3	500MCM	500MCM	2/0	THW	3-1/2"	
8	1	3	#2 AWG	#8 AWG		THW	2"	
9	1	3	2/0	2/0	#4 AWG		1 1/4"	
10	1	3	#2AWG	#2AWG		USE	2"	
11	1	3	#2AWG	#2AWG		USE	2-1/2"	
12	1	3	#2AWG	#2AWG		TW	2"	
13	1	3	#8AWG	#4AWG		THW	1-1/2"	
14	1	3	#4AWG	#4AWG		THW	2"	
15	1	3	#2AWG	#2AWG		TW	1-1/2"	
16	1	3	1/0		#4		1 1/2"	
17	1	3	#4AWG	#4AWG	#8AWG	THW	1-1/2"	
18	1	3	350MCM	350MCM		THW	3-1/2"	
19	2	3	500MCM	500MCM		XHHW	3"	
20	1	3	4/0			THW	2"	
21	1	3	4/0			RH	2-1/2"	
22	2	3	250MCM			RH	3"	
23	1	3	3/0			RH	2"	
24	1	3	4/0	4/0		XHHW		
25	1	3	1/0	1/0			2"	
26	1	3	#2 AWG	#2 AWG	#8 AWG	THW	2"	
27	1	3	500MCM	500MCM	#3 AWG	XHHW	3-1/2"	
28	2	3	500MCM	500MCM	1/0	XHHW	3-1/2"	
29	1	3	500MCM			RHW	3"	
30	2	3	350MCM	350MCM		THW	3"	
31	4	3	500MCM	500MCM		XHHW	3"	1-3" MT
32	4	3	500MCM	500MCM	4/0	XHHW	3-1/2"	
33	1	3	#2 AWG	#2 AWG		TW	1-1/4"	
34	1	3	4/0			THHN	2-1/2"	
35	1	3	4/0	4/0		THW	3"	
36	1	3	250MCM	250MCM		THW	2 1/2"	
37	1	3	1/0	1/0	#8 AWG	THW	2"	
38	1	3	500MCM	500MCM		XHHW	3"	
39	1	3	400MCM	400MCM		RH	3"	
40	1	3	#3 AWG		#8 AWG	THW	2"	
41	1	3	350MCM			THW	2-1/2"	
42	1	3	1/0			THW/TW	2"	
43	1	3	#3 AWG	#2 AWG	#6 AWG	TW		
44	1	3	#6 AWG			TW		
45	1	3	1/0	#8		THW/TW	2"	
46	1	3	3/0			THW	2"	
47	1	3	2/0	2/0		TW	2"	
48	1	3	4/0	4/0		TW	3"	
49	1	3	4/0	4/0		THW	2"	
50	1	2	350MCM	#6 AWG	#6 AWG	THW	2"	
51	1	3	4/0	4/0	#4	TW	2"	
52	1	3	#4 AWG			TW	2"	
53	1	3	4/0	4/0	#4	THW	2-1/2"	
54	1	3	4/0	4/0		TW	2-1/2"	
55	1	3	3/0	3/0	#6 AWG	XHHW/THW	2"	
56	1	3	250	250	#4 AWG		2 1/2"	
57	1	3	250	250			2"	
58	1	3	250	250			2"	
59	1	3	3/0	4/0		THW	3"	
60	1	3	4/0	4/0	#4	XHHW	2 1/2"	
61	1	3	1	1	#8	THHN	1 1/2"	
62	1	3	4		#8	THHN	1 1/2"	

REVISION #	DESCRIPTION	DATE
01	BID SET	05/09/2025

CONSULTANTS

CIVIL:
FMG ENGINEERING
3700 STURGIS RD
RAPID CITY, SD 57702-0317
Phone: 605-342-4105
ALEX FISHER

STRUCTURAL:
Albertson Engineering Inc.
ALBERTSON ENGINEERING INC.
3202 W MAIN ST SUITE C
RAPID CITY, SD 57702
Phone: 605-343-9606
STEPHEN KILBER

MEP: WPE # BU24018
WPE WEST PLAINS ENGINEERING, INC.
WEST PLAINS ENGINEERING, INC.
1750 RAND RD
RAPID CITY, SD 57702
Phone: 605-348-7455
DAREN BECKLOFF

DESIGNER OF RECORD

A/E:
STONE GROUP ARCHITECTS
600 EAST 7TH STREET
SIOUX FALLS, SD 57103
605-271-1144
GARRY BLACK
STONE GROUP ARCHITECTS

STAMP
REGISTERED PROFESSIONAL ENGINEER
REG. NO. 9162
DAREW WAYNE BECKLOFF
SOUTH DAKOTA
5/9/25

Office of Construction and Facilities Management
VA U.S. Department of Veterans Affairs

Drawing Title: BUILDING 12 - NORMAL SYSTEM RISER DIAGRAM - ELECTRICAL REMODEL	Phase: BID - PERMIT SET	Project Title: HOT SPRINGS ELECTRICAL UPGRADE	Project Number: VA #568A4-24-202 SGA #241938
			Building Number: 10, 12 & 64
Approved: DOUG SPRINKLE	FULLY SPRINKLERED	Location: HOT SPRINGS, SD 47747	Drawing Number: E303
FOR OFFICIAL USE ONLY	FOR OFFICIAL USE ONLY	Issue Date: 05-09-2025 / Checked: DWB / Drawn: DWB	

VA FORM 08 - 6231

P:\VA\2024\241938 VA Hot Springs Upgrade Electrical\E_Drawings-Revit\Exports\Revit Upload\241938_VA Hot Springs_Elec Upgrade_01-10-2025.rvt
1/10/2025 12:00:05 PM

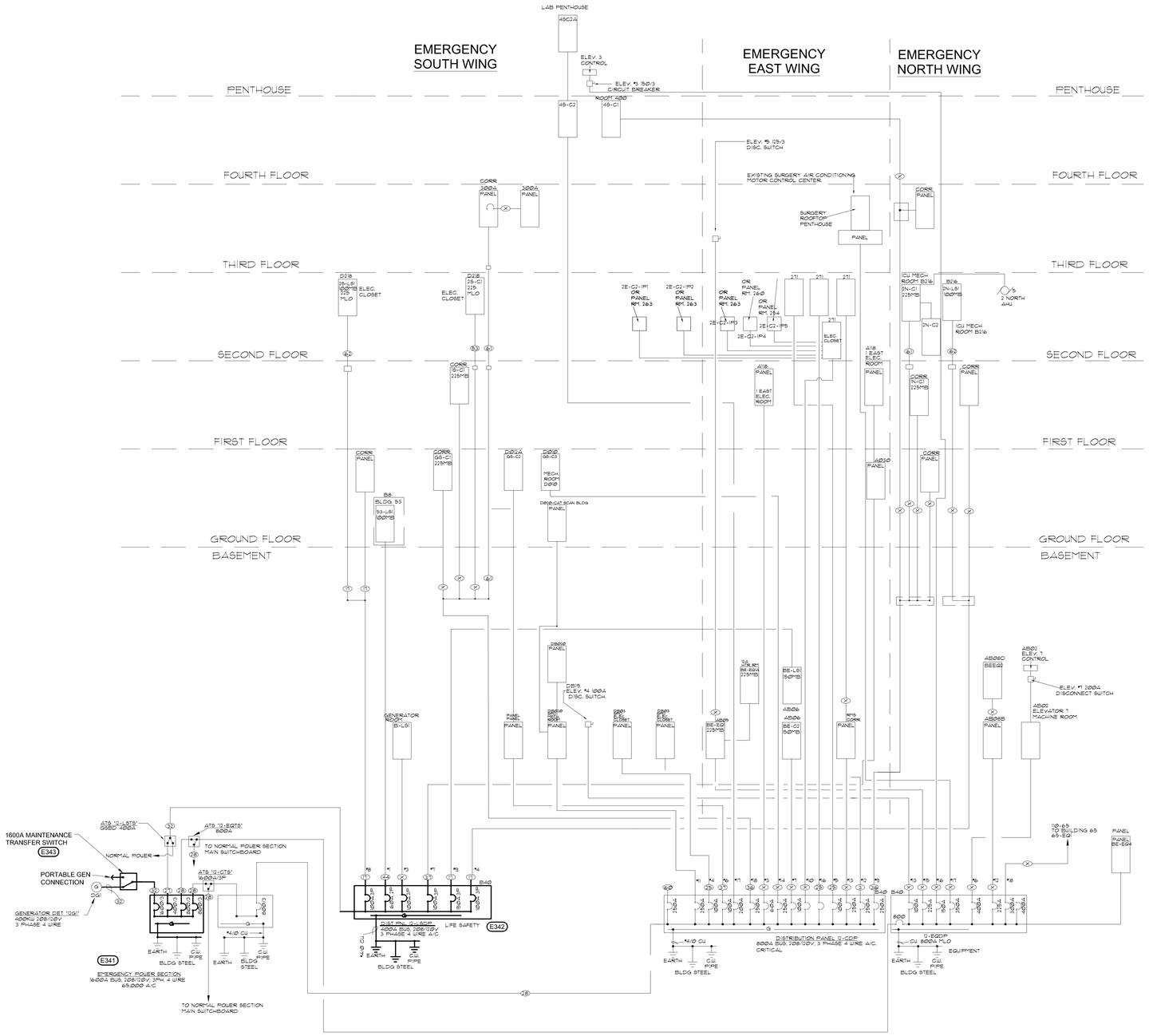

1 **BUILDING 12 EMERGENCY SYSTEM RISER DIAGRAM - ELECTRICAL REMODEL**
NO SCALE

ELECTRICAL MISCELLANEOUS NOTES:

A. ALL INDICATED EQUIPMENT TO BE DEMOLISHED TO BE COMPLETELY DE-ENERGIZED PRIOR TO WORK STARTING.

B. UNLESS SPECIFICALLY NOTED, ALL EQUIPMENT SHOWN IS EXISTING TO REMAIN.

C. EXISTING EQUIPMENT IS SHOWN HALFTONE. EQUIPMENT BEING DEMOLISHED IS SHOWN HATCHED.

D. CONTRACTOR TO FIELD VERIFY THE EXACT SIZE OF EXISTING EQUIPMENT PRIOR TO DEMOLITION. EXISTING ELECTRICAL EQUIPMENT ARE SIZED BASED ON AVAILABE RECORD DRAWINGS.

E. OWNER RETAINS THE RIGHT TO REFUSE POSSESSION OF ANY AND/OR ALL EXISTING INDICATED EQUIPMENT TO BE DEMOLISHED. ANYTHING NOT REQUESTED TO BE SALVAGED BY THE OWNER SHALL BE REMOVED BY CONTRACTOR OFF SITE.

(X) ELECTRICAL SPECIFIC NOTES:

E341 PROVIDE NEW FLOOR MOUNTED SWITCHBOARD "EMERGENCY GENERATOR".

E342 PROVIDE NEW DISTRIBUTION PANELBOARD "12-LSDP" MOUNTED ON WALL.

E343 PROVIDE NEW 1600A MAINTENANCE TRANSFER SWITCH FOR PORTABLE GENERATOR CONNECTION.

FEEDER SCHEDULE

KEY	SETS	CONDUCTOR NO.	CONDUCTOR SIZE	NUETRAL	GND	TYPE	CONDUIT	NOTES
1	2	3	4/0	4/0	#2 AWG	THW	2-1/2"	
2	1	3	#4AWG	#4AWG	#8 AWG	THW	1-1/4"	
3	1	3	#4AWG	#4AWG	#8AWG	THW	2"	
4	1	3	3/0	3/0	#4	THW	2-1/2"	
5	2	3	500MCM	500MCM	2/0	THW	WIREWAY	
6	1	3	500MCM	500MCM		THW	3-1/2"	
7	2	3	500MCM	500MCM	2/0	THW	3-1/2"	
8	1	3	#2 AWG	#8 AWG		THW	2"	
9	1	3	2/0	2/0	#4 AWG		1 1/4"	
10	1	3	#2AWG	#2AWG		USE	2"	
11	1	3	#2AWG	#2AWG		USE	2-1/2"	
12	1	3	#2AWG	#2AWG		TW	2"	
13	1	3	#8AWG		#4AWG	THW	1-1/2"	
14	1	3	#4AWG	#4AWG		THW	2"	
15	1	3	#2AWG	#2AWG		TW	1-1/2"	
16	1	3	1/0		#4		1 1/2"	
17	1	3	#4AWG	#4AWG	#8AWG	THW	1-1/2"	
18	1	3	350MCM	350MCM		THW	3-1/2"	
19	2	3	500MCM	500MCM		XHHW	3"	
20	1	3	4/0			THW	2"	
21	1	3	4/0			RH	2-1/2"	
22	2	3	250MCM			RH	3"	
23	1	3	3/0			RH	2"	
24	1	3	4/0	4/0		XHHW		
25	1	3	1/0	1/0			2"	
26	1	3	#2 AWG	#2 AWG	#8 AWG	THW	2"	
27	1	3	500MCM	500MCM	#3 AWG	XHHW	3-1/2"	
28	2	3	500MCM	500MCM	1/0	XHHW	3-1/2"	
29	1	3	500MCM			RHW	3"	
30	2	3	350MCM	350MCM		THW	3"	
31	4	3	500MCM	500MCM		XHHW	3"	1-3" MT
32	4	3	500MCM	500MCM	4/0	XHHW	3-1/2"	
33	1	3	#2 AWG	#2 AWG		TW	1-1/4"	
34	1	3	4/0			THHN	2-1/2"	
35	1	3	4/0	4/0		THW	3"	
36	1	3	250MCM	250MCM		THW	2 1/2"	
37	1	3	1/0	1/0	#8 AWG	THW	2"	
38	1	3	500MCM	500MCM		XHHW	3"	
39	1	3	400MCM	400MCM		RH	3"	
40	1	3	#3 AWG		#8 AWG	THW	2"	
41	1	3	350MCM			THW	2-1/2"	
42	1	3	1/0			THW/TW	2"	
43	1	3	#3 AWG	#2 AWG	#8 AWG	TW		
44	1	3	#8 AWG			TW		
45	1	3	1/0	#8		THW/TW	2"	
46	1	3	3/0			THW	2"	
47	1	3	2/0	2/0		TW	2"	
48	1	3	4/0	4/0		TW	3"	
49	1	3	4/0	4/0		THW	2"	
50	1	2	350MCM	#8 AWG	#8 AWG	THW	2"	
51	1	3	4/0	4/0	#4	TW	2"	
52	1	3	#4 AWG			TW	2"	
53	1	3	4/0	4/0	#4	THW	2-1/2"	
54	1	3	4/0	4/0		TW	2-1/2"	
55	1	3	3/0	3/0	#8 AWG	XHHW/THW	2"	
56	1	3	250	250	#4 AWG		2 1/2"	
57	1	3	250	250			2"	
58	1	3	250	250			2"	
59	1	3	3/0	4/0		THW	3"	
60	1	3	4/0			THW		
61	1	3	4/0	4/0	4	XHHW	2 1/2"	
62	1	3	1	1	8	THHN	1 1/2"	

REVISION #	DESCRIPTION	DATE
01	BID SET	05/09/2025

CONSULTANTS

CIVIL:
FMG ENGINEERING
3700 STURGIS RD
RAPID CITY, SD 57702-0317
Phone: 605-342-4105
ALEX FISHER

STRUCTURAL:
Albertson Engineering Inc.
ALBERTSON ENGINEERING INC.
3202 W MAIN ST SUITE C
RAPID CITY, SD 57702
Phone: 605-343-9606
STEPHEN KILBER

MEP: WPE # BU24018
WEST PLAINS ENGINEERING, INC.
WEST PLAINS ENGINEERING, INC.
1750 RAND RD
RAPID CITY, SD 57702
Phone: 605-348-7455
DAREN BECKLOFF

DESIGNER OF RECORD

A/E:
STONE GROUP ARCHITECTS
600 EAST 7TH STREET
SIOUX FALLS, SD 57103
605-271-1144
GARRY BLACK

STONE GROUP ARCHITECTS

STAMP

REGISTERED PROFESSIONAL ENGINEER
REG. NO. 9162
DAREN WAYNE BECKLOFF
SOUTH DAKOTA
5-19-25

Office of Construction and Facilities Management

VA U.S. Department of Veterans Affairs

Drawing Title	Phase	Project Title	Project Number
BUILDING 12 EMERGENCY SYSTEM RISER DIAGRAM - ELECTRICAL REMODEL	BID - PERMIT SET	HOT SPRINGS ELECTRICAL UPGRADE	VA #568A4-24-202 SGA #241938
			Building Number: 10, 12 & 64
Approved: DOUG SPRINKLE	FULLY SPRINKLERED	Location: HOT SPRINGS, SD 47747	Drawing Number: E304
	FOR OFFICIAL USE ONLY	Issue Date: 05-09-2025 · Checked: DWB · Drawn: DWB	

FOR OFFICIAL USE ONLY

VA FORM 08 - 6231

P:\WA2024\241938 VA Hot Springs Upgrade Electrical\E_Drawings-Revit\Exports\Revit Upload\241938_VA Hot Springs_Elec Upgrade_01-10-2025.rvt

1/10/2025 12:00:05 PM

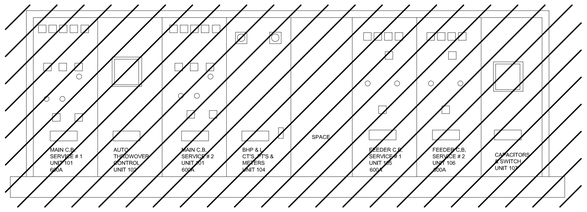

1 **BUILDING 64 MAIN PRIMARY SWITCHGEAR ELEVATION - DEMOLITION**
NO SCALE

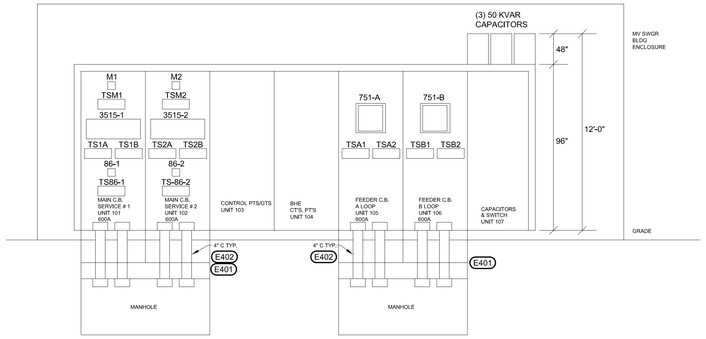

2 **BUILDING MAIN PRIMARY SWITCHGEAR ELEVATION - NEW**
NO SCALE

ELECTRICAL MISCELLANEOUS NOTES:

A. ALL INDICATED EQUIPMENT TO BE DEMOLISHED TO BE COMPLETELY DE-ENERGIZED PRIOR TO WORK STARTING.

B. UNLESS SPECIFICALLY NOTED, ALL EQUIPMENT SHOWN IS EXISTING TO REMAIN.

C. EXISTING EQUIPMENT IS SHOWN HALFTONE. EQUIPMENT BEING DEMOLISHED IS SHOWN HATCHED.

D. CONTRACTOR TO FIELD VERIFY THE EXACT SIZE OF EXISTING EQUIPMENT PRIOR TO DEMOLITION. EXISTING ELECTRICAL EQUIPMENT ARE SIZED BASED ON AVAILABE RECORD DRAWINGS.

E. OWNER RETAINS THE RIGHT TO REFUSE POSSESSION OF ANY AND/OR ALL EXISTING INDICATED EQUIPMENT TO BE DEMOLISHED. ANYTHING NOT REQUESTED TO BE SALVAGED BY THE OWNER SHALL BE REMOVED BY CONTRACTOR OFF SITE.

X ELECTRICAL SPECIFIC NOTES:

E401 COORDINATE HEIGHT OF MANHOLE WITH ELEVATION OF NEW BUILDING. SEE CIVIL PLAN FOR ELEVATIONS.

E402 PROVIDE 4"C FROM TOP OF MANHOLE INTO BOTTOM OF MV SWGR. PROVIDE SEALING AROUND CONDUITS TO PROVIDE WEATHERPROOF SEAL AT BASE OF ENCLOSURE.

MV SWGR EQUIPMENT LIST

ITEM	DESCRIPTION	MANUFACTURER	MODEL	LABEL
86-1	LOCK OUT RELAY, 4 DECKS, 125VDC	ELECTROSWITCH	7804E	BUS-1(CB-1) LOCKOUT RELAY
86-2	LOCK OUT RELAY, 4 DECKS, 125VDC	ELECTROSWITCH	7804E	BUS-2(CB-2) LOCKOUT RELAY
351S-1	MAIN CB-1 OVERCURRENT/TRANSFER RELAY WITH BREAKER TRIP/CLOSE PUSHBUTTONS	SCHWEITZER	0351S7XHD3E5400	MAIN CB-1 OVERCURRENT TRANSFER RELAY
351S-2	MAIN CB-2 OVERCURRENT/TRANSFER RELAY WITH BREAKER TRIP/CLOSE PUSHBUTTONS	SCHWEITZER	0351S7XHD3E5400	MAIN CB-2 OVERCURRENT TRANSFER RELAY
751-A	FEEDER CB-A OVERCURRENT RELAY WITH BREAKER TRIP/CLOSE BUTTONS	SCHWEITZER	751001AA00X0XA51D00	FEEDER CB-A RELAY
751-B	FEEDER CB-B OVERCURRENT RELAY WITH BREAKER TRIP/CLOSE BUTTONS	SCHWEITZER	751001AA00X0XA51D00	FEEDER CB-B RELAY
M-1	15KV MULTIFUNCTION VA,W,A,VAR,FREQ,THD POWER METER	ELECTROINDUSTRY	SHARK 200-60-10-V1-D2-INP100S	15KV BUS-1 METER
M-2	15KV MULTIFUNCTION VA,W,A,VAR,FREQ,THD POWER METER	ELECTROINDUSTRY	SHARK 200-60-10-V1-D2-INP100S	15KV BUS-2 METER
TS1A	TEST SWITCH, 10 POLE, CLEAR COVER, BK HANDLES	ABB-FT1	129A501G01	TEST SWITCH RELAY 1 CONTROLS
TS1B	TEST SWITCH, 10 POLE, CLEAR COVER, R,Y,BK HANDLES	ABB-FT1	774B430G16 (P2-P6-P1-P1-C2-C6-C1)	TEST SWITCH RELAY 1 CTS
TS2A	TEST SWITCH, 10 POLE, CLEAR COVER, BK HANDLES	ABB-FT1	129A501G01	TEST SWITCH RELAY 2 CONTROLS
TS2B	TEST SWITCH, 10 POLE, CLEAR COVER, R,Y,BK HANDLES	ABB-FT1	774B430G16 (P2-P6-P1-P1-C2-C6-C1)	TEST SWITCH RELAY 2 CTS
TSA1	TEST SWITCH, 10 POLE, CLEAR COVER, BK HANDLES	ABB-FT1	129A501G01	TEST SWITCH RELAY A CONTROLS
TSA2	TEST SWITCH, 10 POLE, CLEAR COVER, R,Y,BK HANDLES	ABB-FT1	774B430G16 (P2-P6-P1-P1-C2-C6-C1)	TEST SWITCH RELAY A CTS
TSB1	TEST SWITCH, 10 POLE, CLEAR COVER, BK HANDLES	ABB-FT1	129A501G01	TEST SWITCH RELAY B CONTROLS
TSB2	TEST SWITCH, 10 POLE, CLEAR COVER, R,Y,BK HANDLES	ABB-FT1	774B430G16 (P2-P6-P1-P1-C2-C6-C1)	TEST SWITCH RELAY B CTS
TS86-1	TEST SWITCH, 10 POLE, CLEAR COVER, BK HANDLES	ABB-FT1	129A501G01	TEST SWITCH LOCKOUT RELAY 1
TS86-2	TEST SWITCH, 10 POLE, CLEAR COVER, BK HANDLES	ABB-FT1	129A501G01	TEST SWITCH LOCKOUT RELAY 2
TSM1	TEST SWITCH, 10 POLE, CLEAR COVER, R,Y,BK HANDLES	ABB-FT1	774B430G16 (P2-P6-P1-S0-C2-C6-C1)	TEST SWITCH 69KV METER 1
TSM2	TEST SWITCH, 10 POLE, CLEAR COVER, R,Y,BK HANDLES	ABB-FT1	774B430G16 (P2-P6-P1-S0-C2-C6-C1)	TEST SWITCH 69KV METER 2

MEDIUM VOLTAGE SWITCHGEAR OPERATION SEQUENCE

Normal operation is with either primary Source 1 or Source 2 closed, whichever is closed is the Preferred source and the other is the Alternate source. If the Preferred source becomes deenergized then the Alternate source will be closed if voltage is present after the Alternate source breaker is opened. Source 2 will now be the Preferred source until this source becomes deenergized or manually transferred. Source 1 and Source 2 breakers will be electrically interlocked to prevent closing both breakers simultaneously.

If there is a fault on the Preferred source that trips the breaker, a lock out relay will be energized to lock out the breaker. If the Alternate source is energized and a fault trips the breaker then a lock out relay will be energized to lock out the breaker. The lock out relays will have to be manually reset in order to close in the breakers.

REVISION #	DESCRIPTION	DATE
01	BID SET	05/09/2025

CONSULTANTS

CIVIL:
FMG ENGINEERING
3700 STURGIS RD
RAPID CITY, SD 57702-0317
Phone: 605-342-4105
ALEX FISHER

STRUCTURAL:
Albertson Engineering Inc.
ALBERTSON ENGINEERING INC.
3202 W MAIN ST SUITE C
RAPID CITY, SD 57702
Phone: 605-343-9606
STEPHEN KILBER

MEP: WPE # BU24018
WEST PLAINS ENGINEERING, INC.
WEST PLAINS ENGINEERING, INC.
1750 RAND RD
RAPID CITY, SD 57702
Phone: 605-348-7455
DAREN BECKLOFF

DESIGNER OF RECORD

A/E:
STONE GROUP ARCHITECTS
600 EAST 7TH STREET
SIOUX FALLS, SD 57103
605-271-1144
GARRY BLACK
STONE GROUP ARCHITECTS

STAMP

REGISTERED PROFESSIONAL ENGINEER
REG. NO. 9162
DAREN WAYNE BECKLOFF
SOUTH DAKOTA
5-9-25

Office of Construction and Facilities Management

VA U.S. Department of Veterans Affairs

Drawing Title: ELECTRICAL PRIMARY SWITCHGEAR ELEVATIONS	Phase: BID - PERMIT SET	Project Title: HOT SPRINGS ELECTRICAL UPGRADE	Project Number: VA #568A4-24-202 SGA #241938
			Building Number: 10, 12 & 64
Approved: DOUG SPRINKLE	FULLY SPRINKLERED	Location: HOT SPRINGS, SD 47747	Drawing Number: E401
FOR OFFICIAL USE ONLY	FOR OFFICIAL USE ONLY	Issue Date: 05-09-2025 / Checked: DWB / Drawn: DWB	

VA FORM 08 - 6231

P:\VA\202\241938 VA Hot Springs Upgrade Electrical\E_Drawings-Revit\Exports\Revit Uploads\241938_VA Hot Springs_Elec Upgrade_21-10-2025.rvt

11/10/2025 12:00:05 PM

PNL-12-LSDP

VOLTS:	120/208	PHASES:	3	WIRE:	4
AIC RATING:	18,000	LOCATION:		MAIN CAPACITY:	400A
MOUNTING:	SURFACE	FEEDER		MAIN CONNECTION:	MLO
				MAIN TYPE:	

CKT	ITEM FED	WIRE SIZE	AMPS	POLES	A (WATTS)	B (WATTS)	C (WATTS)	POLES	AMPS	WIRE SIZE	ITEM FED	CKT
1	PANEL 53-LS1		60 A	2				3	100 A		PANEL GS-LS1 & 2S-LS1	2
3	-		-	-				-	-		-	4
5	SPACE							-	-		-	6
7	PANEL B-LS1		100 A	3				3	100 A		PANEL 1N-LS1 & 2N-LS1	8
9	-		-	-				-	-		-	10
11	-		-	-				-	-		-	12
13	PANEL GE-LS1 & 1E-LS1		100 A	3				3	100 A		SPARE	14
15	-		-	-				-	-		-	16
17	-		-	-				-	-		-	18
19	PANEL BE-LS1		150 A	3								20
21	-		-	-								22
23	-		-	-								24
25												26
27												28
29												30
31												32
33												34
35												36
	TOTAL CONNECTED LOAD:				0 W	0 W	0 W	AMPS:	0 A	LOAD:	0 W	

MAIN DISTRIBUTION PANEL: BLDG 10 EMERGENCY POWER EXISTING

MOUNTING:		VOLTAGE:	120/208	PHASES:	3	WIRE:	
FEEDER SIZE:						LOCATION:	
MAIN CAPACITY:	1600A						
MAIN CONNECTION:	MLO						

CKT	ITEM FED	AMPS	POLES	FRAME	WIRE SIZE	A (WATTS)	B (WATTS)	C (WATTS)	COMMENTS
1	PANEL 2-EQDP-2	400 A	3	800F/400S					LSI DIGITRIP NEW CB
2	PANEL 2-EQDP-1	800 A	3	800F/800S					NOTE 3
3	SPARE	400 A	3	800F/400S					NOTE 3
4	SPARE	200 A	3	800F/200S					LSI DIGITRIP NEW CB
5	PANEL 2-LSDP-1	400 A	3	800F/400S					NOTE 3
6	SPD-EM	100 A	3	800F/200S					NOTE 3
7	SPARE	800 A	3	800F/800S					NOTE 3
8									
9									
10									
11									
12									
13									
14									
15									
16									
17									
18									
	TOTAL LOAD:	0 W	AMPS:	0 A	TOTAL CONNECTED LOAD:	0 W	0 W	0 W	

NOTES:
1. DRAWOUT SWITCHBOARD
2. MAIN-TIE-MAIN CONFIGURATION
3. PROVIDE NEW DRAWOUT BREAKER WITH DIGITRIP LSI TRIP UNIT

MAIN DISTRIBUTION PANEL: BLDG 10 NORMAL POWER BUS B-EXISTING

MOUNTING:		VOLTAGE:	120/208	PHASES:	3	WIRE:	
FEEDER SIZE:						LOCATION:	
MAIN CAPACITY:	1600A						
MAIN CONNECTION:	NOTE 2						

CKT	ITEM FED	AMPS	POLES	FRAME	WIRE SIZE	A (WATTS)	B (WATTS)	C (WATTS)	COMMENTS
1	BUS DUCT 2 DOM ARCADE WEST	800 A	3	800F/800S					NOTE 3
2	BUS DUCT 1 DOM ARCADE EAST	800 A	3	800F/800S					NOTE 3
3	SPD-B	100 A	3	800F/200S					NOTE 3
4	SPARE	600 A	3	800F/600S					NOTE 3
5	PANEL 2-EQDP-2	200 A	3	800F/400S					NOTE 3
6	PANEL 2-EQDP-1	800 A	3	800F/800S					NOTE 3
7	SPARE	400 A	3	800F/400S					NOTE 3
8									
9									
10									
11									
12									
13									
14									
15									
16									
17									
18									
	TOTAL LOAD:	0 W	AMPS:	0 A	TOTAL CONNECTED LOAD:	0 W	0 W	0 W	

NOTES:
1. DRAWOUT SWITCHBOARD
2. MAIN-TIE-MAIN CONFIGURATION. REPLACE MAIN BREAKER WITH NEW DRAWOUT BREAKER WITH DIGITRIP LSI UNIT.
3. PROVIDE NEW DRAWOUT BREAKER WITH DIGITRIP LSI TRIP UNIT

MAIN DISTRIBUTION PANEL: BLDG 10 NORMAL POWER BUS A-EXISTING

MOUNTING:		VOLTAGE:	120/208	PHASES:	3	WIRE:	
FEEDER SIZE:						LOCATION:	
MAIN CAPACITY:	1600A						
MAIN CONNECTION:	NOTE 2						

CKT	ITEM FED	AMPS	POLES	FRAME	WIRE SIZE	A (WATTS)	B (WATTS)	C (WATTS)	COMMENTS
1	TIE BREAKER	1600 A	3	1600F/1600S					NOTE 3
2	PANEL-2-NDP-1	600 A	3	800F/600S					NOTE 3
3	DOM ATS	800 A	3	1600F/1600S					LSI DIGITRIP-NEW CB
4	SPD-A	100 A	3	800F/200S					NOTE 3
5	SPARE	400 A	3	800F/400S					NOTE 3
6									
7									
8									
9									
10									
11									
12									
13									
14									
15									
16									
17									
18									
	TOTAL LOAD:	0 W	AMPS:	0 A	TOTAL CONNECTED LOAD:	0 W	0 W	0 W	

NOTES:
1. DRAWOUT SWITCHBOARD
2. MAIN-TIE-MAIN CONFIGURATION. REPLACE MAIN BREAKER WITH NEW DRAWOUT BREAKER WITH DIGITRIP LSI UNIT.
3. PROVIDE NEW DRAWOUT BREAKER WITH DIGITRIP LSI TRIP UNIT

MAIN DISTRIBUTION PANEL: BLDG 12 EMERGENCY GENERATOR - NEW

MOUNTING:		VOLTAGE:	120/208	PHASES:	3	WIRE:	
FEEDER SIZE:						LOCATION:	
MAIN CAPACITY:	1600A						
MAIN CONNECTION:	MCB-LSI						

CKT	ITEM FED	AMPS	POLES	FRAME	WIRE SIZE	A (WATTS)	B (WATTS)	C (WATTS)	COMMENTS
1	ATS-12-EGTS	800 A	3	800					NOTE 2
2	ATS-12-LSTS	400 A	3	800					NOTE 2
3	ATS-12-CTS	800 A	3	800					NOTE 2
4									
5									
6									
7									
8									
9									
10									
11									
12									
13									
14									
15									
16									
17									
18									
	TOTAL LOAD:	0 W	AMPS:	0 A	TOTAL CONNECTED LOAD:	0 W	0 W	0 W	

NOTES:
1. DRAWOUT SWITCHBOARD
2. PROVIDE NEW DRAWOUT BREAKER WITH DIGITRIP LSI TRIP UNIT

MAIN DISTRIBUTION PANEL: BLDG 12 NORMAL POWER BUS A-EXISTING

MOUNTING:		VOLTAGE:	120/208	PHASES:	3	WIRE:	
FEEDER SIZE:						LOCATION:	
MAIN CAPACITY:	1600						
MAIN CONNECTION:	NOTE 2						

CKT	ITEM FED	AMPS	POLES	FRAME	WIRE SIZE	A (WATTS)	B (WATTS)	C (WATTS)	COMMENTS
1	TIE BREAKER	1600 A	3	1600A					NOTE 4
2	PANEL-12-NDP1	720 A	3	800F/800S					NOTE 3
3	ATS-12-LSTS	400 A	3	800F/400S					NOTE 3
4	SPD-A	100 A	3	800F/200S					NOTE 3
5	PANEL-12-NDP3	800 A	3	800F/800S					LSI DIGITRIP-NEW CB
6									
7									
8									
9									
10									
11									
12									
13									
14									
15									
16									
17									
18									
	TOTAL LOAD:	0 W	AMPS:	0 A	TOTAL CONNECTED LOAD:	0 W	0 W	0 W	

NOTES:
1. DRAWOUT SWITCHBOARD
2. MAIN-TIE-MAIN CONFIGURATION - REPLACE MAIN BREAKER WITH NEW DRAWOUT BREAKER WITH DIGITRIP LSI TRIP UNIT.
3. PROVIDE NEW DRAWOUT BREAKER WITH DIGITRIP LSI TRIP UNIT
4. PROVIDE NEW DRAWOUT BREAKER WITH NO OVERCURRENT TRIP

MAIN DISTRIBUTION PANEL: BLDG 12 NORMAL POWER BUS B-EXISTING

MOUNTING:		VOLTAGE:	120/208	PHASES:	3	WIRE:	
FEEDER SIZE:						LOCATION:	
MAIN CAPACITY:	1600						
MAIN CONNECTION:	NOTE 2						

CKT	ITEM FED	AMPS	POLES	FRAME	WIRE SIZE	A (WATTS)	B (WATTS)	C (WATTS)	COMMENTS
1	ATS-12-CTS	1600 A	3	1600F/1600S					NOTE 3
2	SPD-B	100 A	3	800F/200S					NOTE 3
3	PANEL-12-NDP2	800 A	3	800F/800S					NOTE 3
4	ATS-12-EGTS	600 A	3	800F/600S					NOTE 3
5	SPARE	1800 A	3	2000F/2000S					NOTE 3
6	PANEL -12-CDP	800 A	3	800F/800S					NOTE 3
7	SPARE	1600 A	3	1600F/1600S					NOTE 3
8	SPARE	800 A	3	800F/800S					NOTE 3
9									
10									
11									
12									
13									
14									
15									
16									
17									
18									
	TOTAL LOAD:	0 W	AMPS:	0 A	TOTAL CONNECTED LOAD:	0 W	0 W	0 W	

NOTES:
1. DRAWOUT SWITCHBOARD
2. MAIN-TIE-MAIN CONFIGURATION - REPLACE MAIN BREAKER WITH NEW DRAWOUT BREAKER WITH DIGITRIP LSI TRIP UNIT.
3. PROVIDE NEW DRAWOUT BREAKER WITH DIGITRIP LSI TRIP UNIT

MDP 64

VOLTS:	120/240	PHASES:	1	WIRE:	3	MAIN CAPACITY:	40A
AIC RATING:	22,000A	LOCATION:	BLDG 64			MAIN CONNECTION:	
MOUNTING:	SURFACE	FEEDER SIZE:				MAIN TYPE:	300A MCB

CKT	ITEM FED	WIRE SIZE	AMPS	POLES	A (WATTS)	B (WATTS)	POLES	AMPS	WIRE SIZE	ITEM FED	CKT
1	EXTERIOR LTS	12	20 A	1			2	100 A	2	BLDG 28	2
3	EMERGENCY LTS	12	20 A	1			-	-	2	-	4
5	BREAKER TEST CAB	12	20 A	1			2	100 A	2	BLDG 29	6
7	BREAKER TEST CAB	12	20 A	1			-	-	2	-	8
9	OUTLETS/METER	12	20 A	1			2	100 A	2	BLDG 67	10
11	OUTLETS	12	20 A	1			-	-	2	-	12
13	EXHAUST FAN	12	20 A	1			2	40 A	8	UNIT HEATER	14
15	SPARE		20 A	1			-	-	8	-	16
17	SPARE		20 A	1			2	20 A	10	STREET LIGHTS	18
19	SPARE		20 A	1			-	-	10		20
21											22
23											24
25											26
27											28
29											30
31											32
33											34
35											36
37											38
39											40
41											42
	TOTAL CONNECTED LOAD:		0 W		0 W		AMPS:	0 A	LOAD:	0 W	

REVISION #	DESCRIPTION	DATE
01	BID SET	05/09/2025

VA FORM 08 - 6231

CONSULTANTS

CIVIL:
FMG ENGINEERING
3700 STURGIS RD
RAPID CITY, SD 57702-0317
Phone: 605-342-4105
ALEX FISHER

STRUCTURAL:
Albertson Engineering Inc.
ALBERTSON ENGINEERING INC.
3202 W MAIN ST SUITE C
RAPID CITY, SD 57702
Phone: 605-343-9606
STEPHEN KILBER

MEP: WPE # BU24018
WEST PLAINS ENGINEERING, INC.
WEST PLAINS ENGINEERING, INC.
1750 RAND RD
RAPID CITY, SD 57702
Phone: 605-348-7455
DAREN BECKLOFF

DESIGNER OF RECORD
A/E:
STONE GROUP ARCHITECTS
600 EAST 7TH STREET
SIOUX FALLS, SD 57103
605-271-1144
GARRY BLACK

STAMP
REGISTERED PROFESSIONAL ENGINEER
REG. NO. 9152
DAREW WAYNE BECKLOFF
SOUTH DAKOTA, U.S.A.
5/9/25

Office of Construction and Facilities Management
VA U.S. Department of Veterans Affairs

Drawing Title: ELECTRICAL SCHEDULES	Phase: BID - PERMIT SET	Project Title: HOT SPRINGS ELECTRICAL UPGRADE	Project Number: VA #568A4-24-202, SGA #241938
			Building Number: 10, 12 & 64
Approved: DOUG SPRINKLE	FULLY SPRINKLERED	Location: HOT SPRINGS, SD 47747	Drawing Number: E501
	FOR OFFICIAL USE ONLY	Issue Date: 05-09-2025 / Checked: DWB / Drawn: DWB	

P:\VA\2024\241938 VA Hot Springs Upgrade Electrical\E_Drawings-Revit\Exports\Revit Upload\241938_VA Hot Springs_Elec Upgrade_01-10-2025.rvt

1/10/2025 12:00:05 PM