1. SCOPE 3
2. APPLICABLE STANDARDS AND DRAWINGS 3
3. SPECIFICATION SUMMARY 3
4. ENCLOSURE 3
5. SPACE HEATERS 4
6. CIRCUIT BREAKERS AND ATS 4
7. ACCESSORIES AND INSTRUMENTATION 6
8. BUSES 6
9. INTERLOCKS 7
10. TESTS 7
11. NAME PLATE 8
12. HANDLING PROVISIONS 8
13. SUBMITTALS 8
14. FACTORY VISITS 9
15. BID QUESTIONNAIRE 10
PROPOSED BREAKER AND METERING LAYOUT – DRAWING 1 11
PROPOSED SYSTEM SCHEMATIC – DRAWING 2 12

1. Scope

This specification describes a low voltage switchgear panel that will include one main breaker, one generator back feed breaker, four feeder breakers, one installed spare feeder breaker, automatic transfer switch and local metering for a mission critical application. The switchgear panel shall be suitable for pad mounted outdoor operation.

2. Applicable Standards and Drawings

2.1. The equipment under this specification shall conform to the latest applicable IEEE, ANSI, and NEMA standards.

2.2. The equipment under this specification shall carry a UL listing (or an equivalent NRTL certification)

2.3. See Drawing 1, located at the end of this specification, for a proposed breaker and metering layout

2.4. See Drawing 2, located at the end of this specification, for a proposed schematic

3. Specification Summary

3.1. The switchgear panel shall be rated:

Frequency	60 Hz
Bus	Tin-plated copper
Minimum Horizontal Bus Rating	2000 A
Minimum Vertical Bus Rating	2000 A
Minimum Neutral Bus Rating	2000 A
Nominal Voltage	480 Vac
System Wiring	3 phase/4 wire
Minimum Interrupting Rating at 480 V	65 kA
Minimum Short-time Rating at 480 V	65 kA
5 x Feeder Breaker Plug	1000 A
5 x Minimum Feeder Breaker Frame	1600 A
Main Breaker Plug	2000 A
Minimum Main Breaker Frame	2000 A
Generator Breaker Plug	2000 A
Generator Breaker Frame	2000 A
Minimum Mechanical Withstand Forces	65 kA
ATS Current Rating	2000 A
ATS Minimum Interrupt Rating at 480V	65 kA

3.2. Outdoor Ambient Conditions

Altitude:	Less than 1000 meters
Temperature range:	-40 °C to 40 °C
Maximum average temperature over 24 hours:	30 °C

4. Enclosure

4.1. The enclosure shall meet NEMA 3R outdoor standards

4.2. The enclosure shall be of the non walk-in variety

4.3. The enclosure shall have a welded structural steel base frame

4.4. The front breaker doors and covers must be free of any ventilation openings

4.5. The front external doors shall be padlockable with 3-point latches

4.6. The internal compartment doors shall have ¼ turn latches

4.7. The rear of the switchgear panel shall include 3-point latching doors with padlocking provisions

4.8. The enclosure color shall be ANSI 61 gray

4.9. Cable from the load side of this switchgear panel will be fed out of the bottom

4.9. Cable supports shall be supplied

4.10. Closed-door draw out mechanisms shall be used (i.e. through the door drawout)

4.11. Padlocking provisions shall allow locking the breaker in the test and disconnected positions

4.12. Breaker CG-1-1 and breaker CG-1-2 will have outgoing wiring of size 2 x 350 kcmil per phase and neutral. Breaker CG-1-3 and breaker CG-1-4 will have outgoing wiring of size 3 x 300 kcmil per phase and neutral (See drawing 1 for breaker location)

4.13. Incoming connections for the main breaker and generator backfeed will use 500 MCM XHHW-2 Wire (x5) that is bottom entry

4.14. Barriers shall be provided that isolate the rear cable area from the main bus area

4.15. An arc resistant enclosure shall be quoted as an exercisable option

5. Space Heaters

5.1. To avoid moisture condensation within the switchgear enclosure, electric strip heaters shall be installed

5.2. Each heater shall be rated 240 Vac, 100 W

5.3. The space heaters will be operated at 120 Vac (provided by an internal CPT)

5.4. A disconnecting means for all space heaters shall be included

6. Circuit Breakers and ATS

6.1. The breakers shall be Siemens WL breakers or FFDG approved equivalent

6.1.1. ETU 745 trip units shall be used

6.1.2. The trip units shall have LCD options installed

6.1.3. If an equivalent is used, FFDG shall provide updated settings

6.2. There will be 4 feeder breakers, 1 main breaker, 1 generator backfeed breaker, and 1 spare installed feeder breaker at a minimum

6.2.1. Any unused cubicles shall be fitted with a spare feeder breaker and all accompanying hardware, bus, etc.

6.3. The feeder breakers shall be rated as follows:

6.3.1. The frame shall be rated at a minimum of 1600 amps

6.3.2. The plug shall be rated at 1000 amps

6.3.3. Shall include LSIG protection

6.4. The 1000 amp feeder breakers shall have the following options:

6.4.1. Long-time delayed overcurrent protection (LT Pick up: 1 (1000 A), LT Band: 25)

6.4.2. Short-time delayed overcurrent protection (ST Pick up: 8 (8000 A), ST Band: 0.1)

6.4.3. Instantaneous overcurrent protection (Pick up: 12 (12000 A))

6.4.4. Ground fault protection (Pick up: B (300 A), Ground Band: 0.3)

The main breaker and generator backfeed breakers shall be rated as follows:

6.5.1. The frame shall be rated at a minimum of 2000 amps

6.5.2. The plug shall be rated at 2000 amps

6.5.3. Shall include LSIG Protection

6.5. The main and generator backfeed breakers shall have the following options

6.6.1. Long-time delayed overcurrent protection (LT Pick up: .9 (1800 A), LT Band: 14)

6.6.2. Short-time delayed overcurrent protection (ST Pick up: 8 (16000 A), ST Band: 0.2)

6.6.3. Instantaneous overcurrent protection (Pick up: 12 (24000 A)

6.6.4. Ground fault protection (Pick up: B (300 A), Ground Band: 0.3)

6.6.5. Neutral protection

6.6.6. Built in or external interlocks to prevent both the Main and generator backfeed breaker from being racked in at the same time

6.6. Each circuit breaker shall be of the 3 phase 4 wire variety

6.7. Each breaker shall have a minimum interrupting rating of 65 kA

6.8. Each breaker shall have a minimum short time rating of 65 kA

6.9. Each breaker must have lock out tag out provisions installed

6.10. Each breaker shall allow opening/closing (this shall be electric or manual via a panel lever) while V-rated gloves are worn

6.11. Shutters shall be provided on all draw out compartments

6.12. Circuit breakers shall have a minimum of three positions: connected, test, disconnected

6.13. All control wiring within the assembly shall be continuous and shall terminate on each end at a suitable terminal block. Control wiring shall be 14 gauge minimum, stranded type SIS and shall be labeled at both ends with sleeve-type wire markers.

6.14. The switchgear shall ship with a spare main breaker and a spare feeder breaker (If the generator breaker differs from the main breaker, a spare generator breaker shall be shipped as well)

6.15. Grace test points (R-3MT-1K-KIT) shall be provided on the Main and generator backfeed cubicles to allow for voltage testing during switching operations

6.16. ATS shall be rated for a minimum of 2000 Amps continuous and have an interrupt rating of at least 65 kA

6.17. The ATS shall include a bypass switch

6.18. Both the ATS and Bypass switch shall be draw out to allow for maintenance without interrupting power to the switchgear

6.19. The ATS shall be UL listed (UL 1008)

6.20. The ATS shall include a manual and automatic mode

7. Accessories and Instrumentation

7.1. The switchgear panel shall have local metering installed

7.2. Remote metering provisions shall be made

7.2.1. Ethernet communication option

7.3. Test switches shall be installed on the metering circuitry to facilitate testing

7.4. The meter shall be capable of monitoring the following:

7.4.1. All phase to neutral and phase to phase voltages

7.4.2. Current on all phases and neutral

7.5. A control power transformer shall be included that is sufficiently sized to power all instrumentation and heater loads

8. Buses

8.1. All electrical connections shall be rated to carry full load

8.2. All main bus shall be rated 2000 A

8.3. Bus bar shall be used

8.4. Bus shall not exceed 1000 Amps/in^2

8.5. There shall be isolation barriers installed on the main breaker that separate the line and load side of the breaker

8.6. There shall be a neutral bus rated at 100% of the phase rating

8.6.1. 200% neutral shall be quoted as an exercisable option

8.7. There shall be a continuous piece of ground bus that is rated at 50% of the phase rating

8.8. All bus shall be tin plated copper

8.9. All bus must have a minimum bus bracing value of 65 kA

9. Interlocks

9.1. Interlocks shall be provided that prevent a circuit breaker element of the incorrect frame size or interrupting rating from being inserted

9.2. The circuit breaker compartments shall be equipped with a door interlock that only allows the door to be opened if the circuit breaker is in the disconnected position

9.3. Positive mechanical interlocks shall prevent racking the circuit breaker in or out unless the circuit breaker is in the open position

9.4. Interlocks shall prevent the circuit breaker from being closed unless it is in the connected or test position

9.5. Built in or external interlocks that prevent both the Main and generator backfeed breaker from being racked in at the same time shall be included

10. Tests

10.1. Factory tests shall be performed that conform to ANSI C37.50, and ANSI C37.51

10.2. Certified test results shall be supplied to Fermilab

11. Name Plate

11.1. Material shall be stainless steel.

11.2. Information:

11.2.1. Manufacturer's name and address (point of assembly)

11.2.2. Manufacturer's identification reference

11.2.3. Rated frequency

11.2.4. Rated continuous current for buses

11.2.5. Rated short-time withstand current

11.2.6. Rated momentary withstand current

11.2.7. Date of manufacture

12. Handling Provisions

12.1. The switchgear panel shall be designed to withstand shock and vibration during handling and shipping.

12.2. Lift points shall be provided for lifting the switchgear panel. Lift points shall be located so as not to interfere with lifting, installation and maintenance procedures. The lift points shall support the total weight of the switchgear panel.

12.3. Rolling, jacking and skidding provisions shall be provided for adjusting and moving the switchgear panel.

12.4. A certified lifting means shall be provided with the switchgear for the removal of circuit breakers

13. Submittals

13.1. Drawings

13.1.1. All construction drawings shall be approved by Fermilab prior to construction.

13.1.2. Mechanical and electrical drawings shall be done in AUTOCAD™ or DXF formats

13.1.3. A complete as built set of all drawings shall be delivered to Fermilab with the completed Switchgear panel. Also included shall be instruction and data sheets for all accessories.

13.1.4. An e-mail address for the electronic submittals will be given to a successful vendor after the award of the subcontract.

13.2. The submittal schedule for the drawings and other related documents is as follows:

Document	Required Submittal Date
13.2.1. Bid Questionnaire	With Bid
13.2.2. High Level BOM w/ circuit breaker part numbers and section details	With Bid
13.2.3. Approximate dimensions and elevation view	With Bid
13.2.4. Dimensional, outline and arrangement drawings	30 Days ASA
13.2.5. Schematic diagrams	30 Days ASA
13.2.6. Wiring diagrams	30 Days ASA
13.2.7. Complete Bill of Materials	30 Days ASA
13.2.8. Spare parts including unit pricing	30 Days ASA
13.2.9. Installation, maintenance and operating manuals	With Shipment
13.2.10. Two sets of as built drawings	With Shipment
13.2.11. Test reports including certified test report	10 Days After Testing

ASA - After Subcontract Award

Items 13.2.4. through 13.2.7 shall be submitted to the Fermilab for review. Ten (10) working days shall be allowed for Fermilab review of the drawings.

14. Factory Visits

14.1. Fermilab reserves the right to (At least ten (10) working days advance notice is required for each visit):

14.1.1. Have a pre-award site visit at the location that will produce the switchgear

14.1.2. Witness any and/or all tests specified in section 10 of this specification.

15. Bid Questionnaire

This questionnaire is to be filled out by the bidder.

Date: _____

Offered By: _____

Question:	Answer:
a. Panel Meter	
1. Manufacturer	_____
2. Model Number	_____
b. CT	
1. Manufacturer	_____
2. Ratio	_____
3. High or Low Side Mounted	_____
c. Bus	
1. Material	_____
2. Plating	_____
3. Current Density	_____
d. Enclosure	
1. Material	_____
2. Category, type	_____

Proposed Breaker and Metering Layout – Drawing 1

Automatic Transfer Switch 2000A	Local Metering Service Light & Switch Duplex Receptacle Heater Switch	Feeder Breaker CG-1-2 DHP CG-1 1000 [AT] 1600 [AF]
	Main Breaker 2000 [AT] 2000 [AF]	Feeder Breaker CG-1-3 1000 [AT] 1600 [AF]
	Feeder Breaker CG-1-1 DHP CG-2 1000 [AT] 1600 [AF]	Feeder Breaker CG-1-4 1000 [AT] 1600 [AF]
	Spare Feeder Breaker 1000 [AT] 1600 [AF]	Generator Backfeed Breaker 2000 [AT] 2000 [AF]
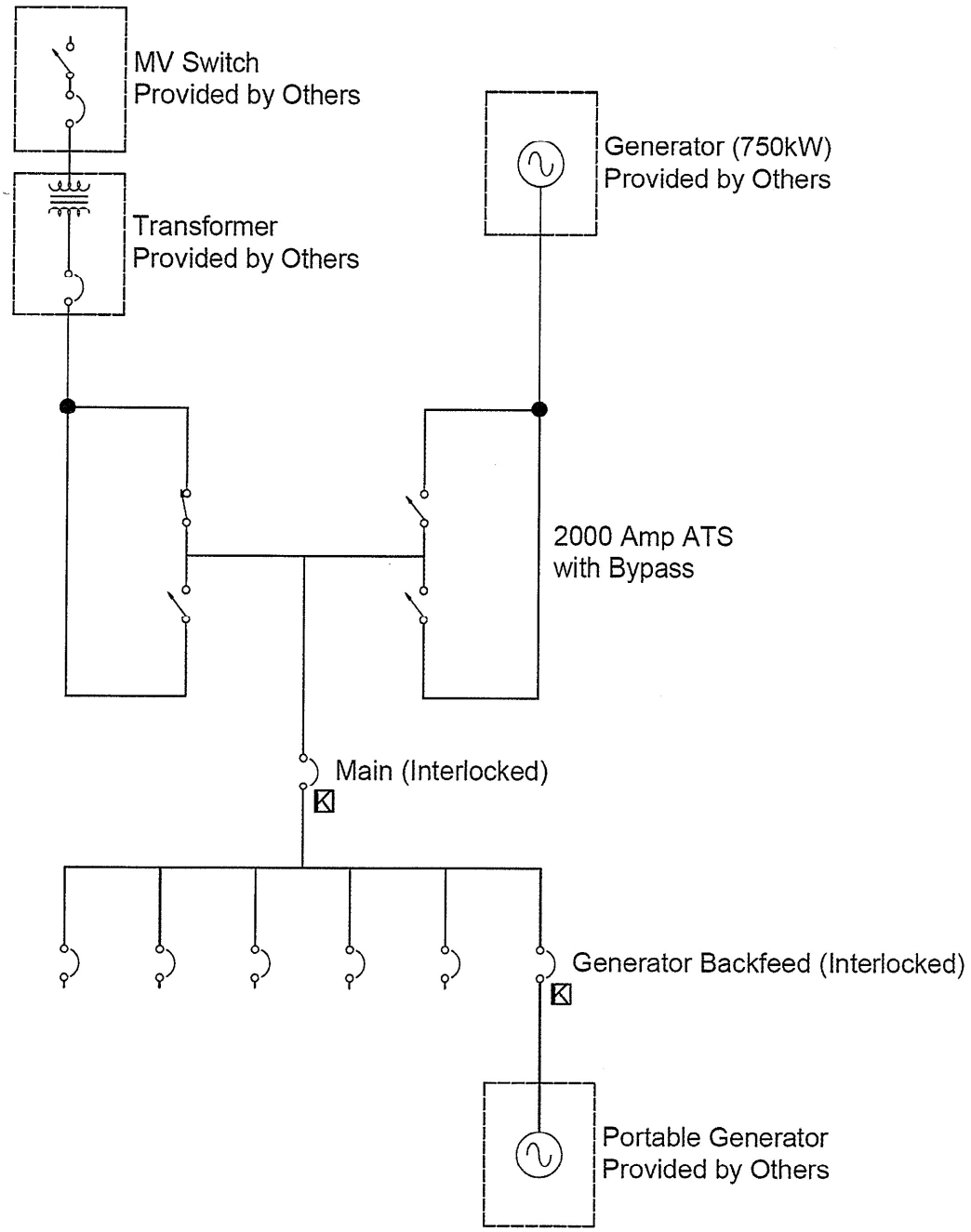
Proposed System Schematic – Drawing 2