REQUEST FOR QUOTATION
(THIS IS NOT AN ORDER)

THIS RFQ [X] IS [ ] IS NOT A SMALL BUSINESS SET-ASIDE

1. REQUEST NUMBER	2. DATE ISSUED	3. REQUISITION/PURCHASE REQUEST NUMBER	4. CERT. FOR NAT. DEF. UNDER BDSA REG. 2 AND/OR DMS REG. 1	RATING
140F1G26Q0073	08/03/2026	0044053504		

5a. ISSUED BY
FWS IT Goods
FWS, IT Goods
5275 Leesburg Pike
Falls Church VA 22041

6. DELIVER BY *(Date)*: Multiple

7. DELIVERY: [X] FOB DESTINATION [ ] OTHER *(See Schedule)*

5b. FOR INFORMATION CALL *(NO COLLECT CALLS)*

NAME	TELEPHONE NUMBER	
	AREA CODE	NUMBER
John Skogen	612	713-5210

8. TO:

a. NAME

b. COMPANY

c. STREET ADDRESS

d. CITY

e. STATE

f. ZIP CODE

9. DESTINATION

a. NAME OF CONSIGNEE: FWS LODI FISH AND WILDL OFC

b. STREET ADDRESS: 850 S. Guild Avenue, Suite 105

c. CITY: Lodi

d. STATE: CA

e. ZIP CODE: 95240-3171

10. PLEASE FURNISH QUOTATIONS TO THE ISSUING OFFICE IN BLOCK 5a ON OR BEFORE CLOSE OF BUSINESS *(Date)*: 08/12/2026 1700 ED

IMPORTANT: This is a request for information and quotations furnished are not offers. If you are unable to quote, please so indicate on this form and return it to the address in Block 5a. This request does not commit the Government to pay any costs incurred in the preparation of the submission of this quotation or to contract for supplies or service. Supplies are of domestic origin unless otherwise indicated by quoter. Any representations and/or certifications attached to this Request for Quotation must be completed by the quoter.

11. SCHEDULE *(Include applicable Federal, State and local taxes)*

ITEM NUMBER (a)	SUPPLIES/SERVICES (b)	QUANTITY (c)	UNIT (d)	UNIT PRICE (e)	AMOUNT (f)
00010	TANKS Please see attached specifications. Delivery: 10/01/2026	1	EA		
00020	TANKS Delivery: 08/30/2026	1	EA		
00030	TRAILER Delivery: 08/30/2026	2	EA		

12. DISCOUNT FOR PROMPT PAYMENT	a. 10 CALENDAR DAYS (%)	b. 20 CALENDAR DAYS (%)	c. 30 CALENDAR DAYS (%)	d. CALENDAR DAYS NUMBER	d. CALENDAR DAYS PERCENTAGE

NOTE: Additional provisions and representations [ ] are [ ] are not attached.

13. NAME AND ADDRESS OF QUOTER

a. NAME OF QUOTER

b. STREET ADDRESS

c. COUNTY

d. CITY

e. STATE

f. ZIP CODE

14. SIGNATURE OF PERSON AUTHORIZED TO SIGN QUOTATION

15. DATE OF QUOTATION

16. SIGNER

a. NAME *(Type or print)*

b. TELEPHONE AREA CODE NUMBER

c. TITLE *(Type or print)*

. The contractor shall designing and manufacturing a set of two fish hauling trailers as the deliverable.

Manufacture two fish hauling tanks with the following characteristics:

- Tanks to be mounted across semi trailer with 96 inch length perpendicular to trailer deck
- Approximately 1000-gallon single compartment tank with partial interior baffle(s) to limit water movement during transport.
- Driver's side discharge
- Inner tank wall material constructed from at least ¼" aluminum.
- Tank insulated with 2" foam insulation R-11.
- Tank covered in at least 1/8" aluminum external protective outer.
- Rear discharge is an 8" knife valve with 8" ring-lock to adapters of choice.
- Top door outfitted with 3-point bar lock door latch on insulated lid 44" x 40"
- Two 24" air stones included.
- Include air stone plumbing to outside of tank.
- Top doors have integrated handles and include safety cables.
- Tank includes cutouts and caps where aerators can be installed in the future.
- Tank has two screened air vents on top of tank.
- Tank interior has sloped sub-floor towards rear discharge.
- Exterior is painted with white epoxy.
- Tank has non-skid tape on top.
- Includes a clear site gauge kit.
- Outfitted with two 4" gate valves for drain and fill with 4" cam-lock fitting. Gate valves will be placed at one lower and one upper height to facilitate drainage.
- Fork lift skids built into bottom of tank.
- Picking eyes/tie down points on corners.

Mount the fish hauling tanks on separate trailers with the following characteristics:

- Approximately 20 ft aluminum deckover semi-trailer with fish hauling tank mounted across.
- Tank should sit on a 1/4" rubber mat cut to size when mounted on the trailer for additional shock absorption.
- Trailer will have front adjustable 2 5/16" coupler.
- Steps should be added to both sides of the trailer 4 feet back.
- Includes two mid-size oxygen bottle racks on the trailer deck and/or tank exterior.
- Oxygen system is wired with warning light to common 12 volt connection ready to hook up to pull vehicle.
- Trailer will include rear bumper with non slip surface.
- Complete trailer set up with mounted tank has a GVWR of ~10,000-14,000 lbs or closest configuration to comply with all California Department of Transportation regulations for operating with a Class C license.

Provide final delivery of both trailers to the Sacramento metro area and provide a final inspection and walk-through prior to acceptance.

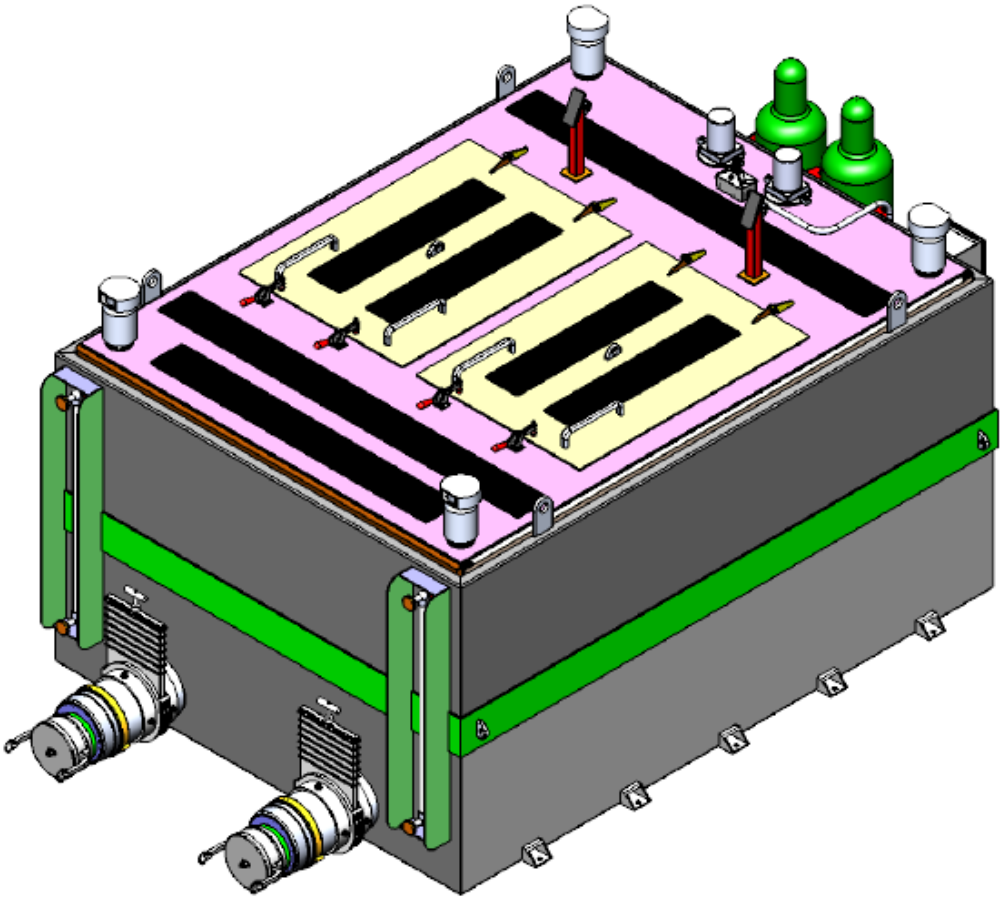

2 - Section 2 1
4 - Section 4 ..... **Error! Bookmark not defined.**

2 - Section 2

52.212-1 Instructions to Offerors - Commercial Products and Commercial Services. (SEP 2023)

52.212-2 Evaluation - Commercial Products and Commercial Services. (NOV 2021)

(a) The Government will award a contract resulting from this solicitation to the responsible offeror whose offer conforming to the solicitation will be most advantageous to the Government, price and other factors considered. The following factors shall be used to evaluate offers:

1) Price, best value
2) Acceptable Specification/Proposal (How well you meet the requirement).
3) Past performance from CPARS/FAPIIS
4) Past performance based on Contracting Officer's personal knowledge of contractor's history (Ref. Previous acquisitions).

(Contracting Officer shall insert the significant evaluation factors, such as (i) technical capability of the item offered to meet the Government requirement; (ii) price; (iii) past performance (see FAR 15.304); and include them in the relative order of importance of the evaluation factors, such as in descending order of importance.)

Technical and past performance, when combined, are [ ] (Contracting Officer state, in accordance with FAR 15.304, the relative importance of all other evaluation factors, when combined, when compared to price.)

(b) *Options*. The Government will evaluate offers for award purposes by adding the total price for all options to the total price for the basic requirement. The Government may determine that an offer is unacceptable if the option prices are significantly unbalanced. Evaluation of options shall not obligate the Government to exercise the option(s).

(c) A written notice of award or acceptance of an offer, mailed or otherwise furnished to the successful offeror within the time for acceptance specified in the offer, shall result in a binding contract without further action by either party. Before the offer's specified expiration time, the Government may accept an offer (or part of an offer), whether or not there are negotiations after its receipt, unless a written notice of withdrawal is received before award.

(End of provision)

52.212-4 Contract Terms and Conditions - Commercial Products and Commercial Services. (NOV 2023)

52.212-5 Contract Terms and Conditions Required To Implement Statutes or Executive Orders - Commercial Products and Commercial Services. (OCT 2025)

(a) The Contractor shall comply with the following Federal Acquisition Regulation (FAR) clauses, which are incorporated in this contract by reference, to implement provisions of law or Executive orders applicable to acquisitions of commercial products and commercial services:

(1) 52.203-19, Prohibition on Requiring Certain Internal Confidentiality Agreements or Statements (JAN 2017) (section 743 of Division E, Title VII, of the Consolidated and Further Continuing Appropriations Act, 2015 (Pub. L. 113-235) and its successor provisions in subsequent appropriations acts (and as extended in continuing resolutions)).

(2) 52.204-23, Prohibition on Contracting for Hardware, Software, and Services Developed or Provided by Kaspersky Lab Covered Entities (DEC 2023) (Section 1634 of Pub. L. 115-91).

(3) 52.204-25, Prohibition on Contracting for Certain Telecommunications and Video Surveillance Services or Equipment. (NOV 2021) (Section 889(a)(1)(A) of Pub. L. 115-232).

(4) 52.209-10, Prohibition on Contracting with Inverted Domestic Corporations (NOV 2015).

(5) 52.232-40, Providing Accelerated Payments to Small Business Subcontractors (MAR 2023) (31 U.S.C. 3903 and 10 U.S.C. 3801).

(6) 52.233-3, Protest After Award (AUG 1996) (31 U.S.C. 3553).

(7) 52.233-4, Applicable Law for Breach of Contract Claim (OCT 2004) (Public Laws 108-77 and 108-78 (19 U.S.C. 3805 note)).

(b) The Contractor shall comply with the FAR clauses in this paragraph (b) that the Contracting Officer has indicated as being incorporated in this contract by reference to implement provisions of law or Executive orders applicable to acquisitions of commercial products and commercial services: *[Contracting Officer check as appropriate.]*

[ ] (1) 52.203-6, Restrictions on Subcontractor Sales to the Government (JUN 2020), with Alternate I (NOV 2021) (41 U.S.C. 4704 and 10 U.S.C. 4655).

[X] (2) 52.203-13, Contractor Code of Business Ethics and Conduct (NOV 2021) (41 U.S.C. 3509).

[ ] (3) 52.203-15, Whistleblower Protections under the American Recovery and Reinvestment Act of 2009 (JUN 2010) (Section 1553 of Pub. L. 111-5). (Applies to contracts funded by the American Recovery and Reinvestment Act of 2009.)

[X] (4) 52.203-17, Contractor Employee Whistleblower Rights (NOV 2023) (41 U.S.C. 4712); this clause does not apply to contracts of DoD, NASA, the Coast Guard, or applicable elements of the intelligence community-see FAR 3.900(a).

[ ] (5) 52.204-10, Reporting Executive Compensation and First-Tier Subcontract Awards (JUN 2020) (Pub. L. 109-282) (31 U.S.C. 6101 note).

[ ] (6) [Reserved]

[ ] (7) 52.204-14, Service Contract Reporting Requirements (OCT 2016) (Pub. L. 111-117, section 743 of Div. C).

[ ] (8) 52.204-15, Service Contract Reporting Requirements for Indefinite-Delivery Contracts (OCT 2016) (Pub. L. 111-117, section 743 of Div. C).

[ ] (9) 52.204-27, Prohibition on a ByteDance Covered Application (JUN 2023) (Section 102 of Division R of Pub. L. 117-328).

[ ] (10) 52.204-28, Federal Acquisition Supply Chain Security Act Orders-Federal Supply Schedules, Governmentwide Acquisition Contracts, and Multi-Agency Contracts. (DEC 2023) (Pub. L. 115-390, title II).

[ ] (11)(i) 52.204-30, Federal Acquisition Supply Chain Security Act Orders- Prohibition. (DEC 2023) (Pub. L. 115-390, title II).

[ ] (ii) Alternate I (DEC 2023) of 52.204-30.

[X] (12) 52.209-6, Protecting the Government's Interest When Subcontracting With Contractors Debarred, Suspended, Proposed for Debarment, or Voluntarily Excluded. (JAN 2025) (31 U.S.C. 6101 note).

[ ] (13) 52.209-9, Updates of Publicly Available Information Regarding Responsibility Matters (OCT 2018) (41 U.S.C. 2313).

[ ] (14) [Reserved]

[ ] (15) 52.219-3, Notice of HUBZone Set-Aside or Sole-Source Award (OCT 2022) (15 U.S.C. 657a).

[ ] (16) 52.219-4, Notice of Price Evaluation Preference for HUBZone Small Business Concerns (OCT 2022) (if the offeror elects to waive the preference, it shall so indicate in its offer) (15 U.S.C. 657a).

[ ] (17) [Reserved]

[ ] (18)(i) 52.219-6, Notice of Total Small Business Set-Aside (NOV 2020) (15 U.S.C. 644).

[ ] (ii) Alternate I (MAR 2020) of 52.219-6.

[ ] (19)(i) 52.219-7, Notice of Partial Small Business Set-Aside (NOV 2020) (15 U.S.C. 644).

[ ] (ii) Alternate I (MAR 2020) of 52.219-7.

[ ] (20) 52.219-8, Utilization of Small Business Concerns (JAN 2025) (15 U.S.C. 637(d)(2) and (3)).

[ ] (21)(i) 52.219-9, Small Business Subcontracting Plan (JAN 2025) (15 U.S.C. 637(d)(4)).

[ ] (ii) Alternate I (NOV 2016) of 52.219-9.

[ ] (iii) Alternate II (NOV 2016) of 52.219-9.

[ ] (iv) Alternate III (JUN 2020) of 52.219-9.

[ ] (v) Alternate IV (JAN 2025) of 52.219-9.

[ ] (22)(i) 52.219-13, Notice of Set-Aside of Orders (MAR 2020) (15 U.S.C. 644(r)).

[ ] (ii) Alternate I (MAR 2020) of 52.219-13.

[ ] (23) 52.219-14, Limitations on Subcontracting (OCT 2022) (15 U.S.C. 657s).

[ ] (24) 52.219-16, Liquidated Damages- Subcontracting Plan (SEP 2021) (15 U.S.C. 637(d)(4)(F)(i)).

[ ] (25) 52.219-27, Notice of Set-Aside for, or Sole-Source Award to, Service-Disabled Veteran-Owned Small Business (SDVOSB) Concerns Eligible Under the SDVOSB Program (FEB 2024) (15 U.S.C. 657f).

[ ] (26)(i) 52.219-28, Postaward Small Business Program Rerepresentation (JAN 2025) (15 U.S.C. 632(a)(2)).

[ ] (ii) Alternate I (MAR 2020) of 52.219-28.

[ ] (27) 52.219-29, Notice of Set-Aside for, or Sole-Source Award to, Economically Disadvantaged Women-Owned Small Business Concerns (OCT 2022) (15 U.S.C. 637(m)).

[ ] (28) 52.219-30, Notice of Set-Aside for, or Sole-Source Award to, Women-Owned Small Business Concerns Eligible Under the Women-Owned Small Business Program (OCT 2022) (15 U.S.C. 637(m)).

[ ] (29) 52.219-32, Orders Issued Directly Under Small Business Reserves (MAR 2020) (15 U.S.C. 644(r)).

[ ] (30) 52.219-33, Nonmanufacturer Rule (SEP 2021) (15 U.S.C. 637(a)(17)).

[X] (31) 52.222-3, Convict Labor (JUN 2003) (E.O. 11755).

[X] (32) 52.222-19, Child Labor-Cooperation with Authorities and Remedies (JAN 2025) (E.O. 13126).

[X] (33) 52.222-21, Prohibition of Segregated Facilities (APR 2015).

[X] (34)(i) 52.222-26, Equal Opportunity (SEPT 2016) (E.O. 11246).

[ ] (ii) Alternate I (FEB 1999) of 52.222-26.

[ ] (35)(i) 52.222-35, Equal Opportunity for Veterans (JUN 2020) (38 U.S.C. 4212).

[ ] (ii) Alternate I (JULY 2014) of 52.222-35.

[X] (36)(i) 52.222-36, Equal Opportunity for Workers with Disabilities (JUN 2020) (29 U.S.C. 793).

[ ] (ii) Alternate I (JULY 2014) of 52.222-36.

[ ] (37) 52.222-37, Employment Reports on Veterans (JUN 2020) (38 U.S.C. 4212).

[ ] (38) 52.222-40, Notification of Employee Rights Under the National Labor Relations Act (DEC 2010) (E.O. 13496).

[X] (39)(i) 52.222-50, Combating Trafficking in Persons (OCT 2025) (22 U.S.C. chapter 78 and E.O. 13627).

[ ] (ii) Alternate I (MAR 2015) of 52.222-50 (22 U.S.C. chapter 78 and E.O. 13627).

[X] (40) 52.222-54, Employment Eligibility Verification (JAN 2025) (Executive Order 12989). (Not applicable to the acquisition of commercially available off-the-shelf items or certain other types of commercial products or commercial services as prescribed in FAR 22.1803.)

[ ] (41)(i) 52.223-9, Estimate of Percentage of Recovered Material Content for EPA-Designated Items (MAY 2008) (42 U.S.C. 6962(c)(3)(A)(ii)). (Not applicable to the acquisition of commercially available off-the-shelf items.)

[ ] (ii) Alternate I (MAY 2008) of 52.223-9 (42 U.S.C. 6962(i)(2)(C)). (Not applicable to the acquisition of commercially available off-the-shelf items.)

[ ] (42) 52.223-11, Ozone-Depleting Substances and High Global Warming Potential Hydrofluorocarbons (MAY 2024) (42 U.S.C. 7671, *et seq.*).

[ ] (43) 52.223-12, Maintenance, Service, Repair, or Disposal of Refrigeration Equipment and Air Conditioners (MAY 2024) (42 U.S.C. 7671, *et seq.*).

[ ] (44) 52.223-20, Aerosols (MAY 2024) (42 U.S.C. 7671, *et seq.*).

[ ] (45) 52.223-21, Foams (MAY 2024) (42 U.S.C. 7671, *et seq.*).

[X] (46) 52.223-23, Sustainable Products and Services (MAY 2024) (E.O. 14057, 7 U.S.C. 8102, 42 U.S.C. 6962, 42 U.S.C. 8259b, and 42 U.S.C. 7671l).

[ ] (47)(i) 52.224-3, Privacy Training (JAN 2017) (5 U.S.C. 552a).

[ ] (ii) Alternate I (JAN 2017) of 52.224-3.

[X] (48)(i) 52.225-1, Buy American- Supplies (OCT 2022)) (41 U.S.C. chapter 83).

[ ] (ii) Alternate I (OCT 2022) of 52.225-1.

[ ] (49)(i) 52.225-3, Buy American-Free Trade Agreements-Israeli Trade Act (NOV 2023) (19 U.S.C. 3301 note, 19 U.S.C. 2112 note, 19 U.S.C. 3805 note, 19 U.S.C. 4001 note, 19 U.S.C. chapter 29 (sections 4501-4732), Public Law 103-182, 108-77, 108-78, 108-286, 108-302, 109-53, 109-169, 109-283, 110-138, 112-41, 112-42, and 112-43.

[ ] (ii) Alternate I [Reserved].

[ ] (iii) Alternate II (JAN 2025) of 52.225-3.

[ ] (iv) Alternate III (FEB 2024) of 52.225-3.

[ ] (v) Alternate IV (OCT 2022) of 52.225-3.

[X] (50) 52.225-5, Trade Agreements (NOV 2023) (19 U.S.C. 2501, *et seq.*, 19 U.S.C. 3301 note).

[X] (51) 52.225-13, Restrictions on Certain Foreign Purchases (FEB 2021) (E.O.'s, proclamations, and statutes administered by the Office of Foreign Assets Control of the Department of the Treasury).

[ ] (52) 52.225-26, Contractors Performing Private Security Functions Outside the United States (OCT 2016) (Section 862, as amended, of the National Defense Authorization Act for Fiscal Year 2008; 10 U.S.C. Subtitle A, Part V, Subpart G Note).

[ ] (53) 52.226-4, Notice of Disaster or Emergency Area Set-Aside (NOV 2007) (42 U.S.C. 5150).

[ ] (54) 52.226-5, Restrictions on Subcontracting Outside Disaster or Emergency Area (NOV 2007) (42 U.S.C. 5150).

[X] (55) 52.226-8, Encouraging Contractor Policies to Ban Text Messaging While Driving (May 2024) (E.O. 13513).

[ ] (56) 52.229-12, Tax on Certain Foreign Procurements (FEB 2021).

[ ] (57) 52.232-29, Terms for Financing of Purchases of Commercial Products and Commercial Services (NOV 2021) (41 U.S.C.4505, 10 U.S.C. 3805).

[ ] (58) 52.232-30, Installment Payments for Commercial Products and Commercial Services (NOV 2021) (41 U.S.C. 4505, 10 U.S.C. 3805).

[X] (59) 52.232-33, Payment by Electronic Funds Transfer-System for Award Management (OCT 2018) (31 U.S.C. 3332).

[ ] (60) 52.232-34, Payment by Electronic Funds Transfer-Other than System for Award Management (JUL 2013) (31 U.S.C. 3332).

[ ] (61) 52.232-36, Payment by Third Party (MAY 2014) (31 U.S.C. 3332).

[ ] (62) 52.239-1, Privacy or Security Safeguards (AUG 1996) (5 U.S.C. 552a).

[ ] (63) 52.240-1, Prohibition on Unmanned Aircraft Systems Manufactured or Assembled by American Security Drone Act-Covered Foreign Entities (Nov 2024) (Sections 1821-1826, Pub. L. 118-31, 41 U.S.C. 3901 note prec.).

[ ] (64) 52.242-5, Payments to Small Business Subcontractors (JAN 2017)(15 U.S.C. 637(d)(13)).

[ ] (65)(i) 52.247-64, Preference for Privately Owned U.S.-Flag Commercial Vessels (NOV 2021) (46 U.S.C. 55305 and 10 U.S.C. 2631).

[ ] (ii) Alternate I (Apr 2003) of 52.247-64.

[ ] (iii) Alternate II (NOV 2021) of 52.247-64.

(c) The Contractor shall comply with the FAR clauses in this paragraph (c), applicable to commercial services, that the Contracting Officer has indicated as being incorporated in this contract by reference to implement provisions of law or Executive orders applicable to acquisitions of commercial products and commercial services: *[Contracting Officer check as appropriate.]*

[X] (1) 52.222-41, Service Contract Labor Standards (AUG 2018) (41 U.S.C. chapter 67).

[ ] (2) 52.222-42, Statement of Equivalent Rates for Federal Hires (MAY 2014) (29 U.S.C. 206 and 41 U.S.C. chapter 67).

[ ] (3) 52.222-43, Fair Labor Standards Act and Service Contract Labor Standards-Price Adjustment (Multiple Year and Option Contracts) (AUG 2018) (29 U.S.C. 206 and 41 U.S.C. chapter 67).

[ ] (4) 52.222-44, Fair Labor Standards Act and Service Contract Labor Standards-Price Adjustment (MAY 2014) (29 U.S.C 206 and 41 U.S.C. chapter 67).

[ ] (5) 52.222-51, Exemption from Application of the Service Contract Labor Standards to Contracts for Maintenance, Calibration, or Repair of Certain Equipment-Requirements (MAY 2014) (41 U.S.C. chapter 67).

[ ] (6) 52.222-53, Exemption from Application of the Service Contract Labor Standards to Contracts for Certain Services-Requirements (MAY 2014) (41 U.S.C. chapter 67).

[X] (7) 52.222-55, Minimum Wages for Contractor Workers Under Executive Order 14026 (JAN 2022).

[X] (8) 52.222-62, Paid Sick Leave Under Executive Order 13706 (JAN 2022) (E.O. 13706).

[ ] (9) 52.226-6, Promoting Excess Food Donation to Nonprofit Organizations (JUN 2020) (42 U.S.C. 1792).

[ ] (10) 52.247-69, Reporting Requirement for U.S.-Flag Air Carriers Regarding Training to Prevent Human Trafficking (JAN 2025) (49 U.S.C. 40118(g)).

(d) *Comptroller General Examination of Record*. The Contractor shall comply with the provisions of this paragraph (d) if this contract was awarded using other than sealed bid, is in excess of the simplified acquisition threshold, as defined in FAR 2.101, on the date of award of this contract, and does not contain the clause at 52.215-2, Audit and Records - Negotiation.

(1) The Comptroller General of the United States, or an authorized representative of the Comptroller General, shall have access to and right to examine any of the Contractor's directly pertinent records involving transactions related to this contract.

(2) The Contractor shall make available at its offices at all reasonable times the records, materials, and other evidence for examination, audit, or reproduction, until 3 years after final payment under this contract or for any shorter period specified in FAR Subpart 4.7, Contractor Records Retention, of the other clauses of this contract. If this contract is completely or partially terminated, the records relating to the work terminated shall be made available for 3 years after any resulting final termination settlement. Records relating to appeals under the disputes clause or to litigation or the settlement of claims arising under or relating to this contract shall be made available until such appeals, litigation, or claims are finally resolved.

(3) As used in this clause, records include books, documents, accounting procedures and practices, and other data, regardless of type and regardless of form. This does not require the Contractor to create or maintain any record that the Contractor does not maintain in the ordinary course of business or pursuant to a provision of law.

(e)(1) Notwithstanding the requirements of the clauses in paragraphs (a), (b), (c), and (d) of this clause, the Contractor is not required to flow down any FAR clause, other than those in this paragraph (e)(1), in a subcontract for commercial products or commercial services. Unless otherwise indicated below, the extent of the flow down shall be as required by the clause-

(i) 52.203-13, Contractor Code of Business Ethics and Conduct (NOV 2021) (41 U.S.C. 3509).

(ii) 52.203-17, Contractor Employee Whistleblower Rights (NOV 2023) (41 U.S.C. 4712).

(iii) 52.203-19, Prohibition on Requiring Certain Internal Confidentiality Agreements or Statements (JAN 2017) (section 743 of Division E, Title VII, of the Consolidated and Further Continuing Appropriations Act, 2015 (Pub. L. 113-235) and its successor provisions in subsequent appropriations acts (and as extended in continuing resolutions)).

(iv) 52.204-23, Prohibition on Contracting for Hardware, Software, and Services Developed or Provided by Kaspersky Lab Covered Entities (DEC 2023) (Section 1634 of Pub. L. 115-91).

(v) 52.204-25, Prohibition on Contracting for Certain Telecommunications and Video Surveillance Services or Equipment. (NOV 2021) (Section 889(a)(1)(A) of Pub. L. 115-232).

(vi) 52.204-27, Prohibition on a ByteDance Covered Application (JUN 2023) (Section 102 of Division R of Pub. L. 117-328).

(vii)(A) 52.204-30, Federal Acquisition Supply Chain Security Act Orders-Prohibition. (DEC 2023) (Pub. L. 115-390, title II).

(B) Alternate I (DEC 2023) of 52.204-30.

(viii) 52.219-8, Utilization of Small Business Concerns (JAN 2025) (15 U.S.C. 637(d)(2) and (3)), in all subcontracts that offer further subcontracting opportunities. If the subcontract (except subcontracts to small business concerns) exceeds the applicable threshold specified in FAR 19.702(a) on the date of subcontract award, the subcontractor must include 52.219-8 in lower tier subcontracts that offer subcontracting opportunities.

(ix) 52.222-21, Prohibition of Segregated Facilities (APR 2015).

(x) 52.222-26, Equal Opportunity (SEP 2016) (E.O. 11246).

(xi) 52.222-35, Equal Opportunity for Veterans (JUN 2020) (38 U.S.C. 4212).

(xii) 52.222-36, Equal Opportunity for Workers with Disabilities (JUN 2020) (29 U.S.C. 793).

(xiii) 52.222-37, Employment Reports on Veterans (JUN 2020) (38 U.S.C. 4212).

(xiv) 52.222-40, Notification of Employee Rights Under the National Labor Relations Act (DEC 2010) (E.O. 13496). Flow down required in accordance with paragraph (f) of FAR clause 52.222-40.

(xv) 52.222-41, Service Contract Labor Standards (AUG 2018) (41 U.S.C. chapter 67).

(xvi) [ ] (A) 52.222-50, Combating Trafficking in Persons (OCT 2025) (22 U.S.C. chapter 78 and E.O. 13627).

[ ] (B) Alternate I (MAR 2015) of 52.222-50 (22 U.S.C. chapter 78 and E.O. 13627).

(xvii) 52.222-51, Exemption from Application of the Service Contract Labor Standards to Contracts for Maintenance, Calibration, or Repair of Certain Equipment-Requirements (MAY 2014) (41 U.S.C. chapter 67).

(xviii) 52.222-53, Exemption from Application of the Service Contract Labor Standards to Contracts for Certain Services-Requirements (MAY 2014) (41 U.S.C. chapter 67).

(xix) 52.222-54, Employment Eligibility Verification (JAN 2025) (E.O. 12989).

(xx) 52.222-55, Minimum Wages for Contractor Workers Under Executive Order 14026 (JAN 2022).

(xxi) 52.222-62 Paid Sick Leave Under Executive Order 13706 (JAN 2022) (E.O. 13706).

(xxii)(A) 52.224-3, Privacy Training (JAN 2017) (5 U.S.C. 552a).

(B) Alternate I (JAN 2017) of 52.224-3.

(xxiii) 52.225-26, Contractors Performing Private Security Functions Outside the United States (OCT 2016) (Section 862, as amended, of the National Defense Authorization Act for Fiscal Year 2008; 10 U.S.C. Subtitle A, Part V, Subpart G Note).

(xxiv) 52.226-6, Promoting Excess Food Donation to Nonprofit Organizations (JUN 2020) (42 U.S.C. 1792). Flow down required in accordance with paragraph (e) of FAR clause 52.226-6.

(xxv) 52.232-40, Providing Accelerated Payments to Small Business Subcontractors (MAR 2023) (31 U.S.C. 3903 and 10 U.S.C. 3801). Flow down required in accordance with paragraph (c) of 52.232-40.

(xxvi) 52.240-1, Prohibition on Unmanned Aircraft Systems Manufactured or Assembled by American Security Drone Act-Covered Foreign Entities (Nov 2024) (Sections 1821-1826, Pub. L. 118-31, 41 U.S.C. 3901 note prec.).

(xxvii) 52.247-64, Preference for Privately Owned U.S.-Flag Commercial Vessels (NOV 2021) (46 U.S.C. 55305 and 10 U.S.C. 2631). Flow down required in accordance with paragraph (d) of FAR clause 52.247-64.

(2) While not required, the Contractor may include in its subcontracts for commercial products and commercial services a minimal number of additional clauses necessary to satisfy its contractual obligations.

(End of clause)

52.217-8 Option To Extend Services. (NOV 1999)

The Government may require continued performance of any services within the limits and at the rates specified in the contract. These rates may be adjusted only as a result of revisions to prevailing labor rates provided by the Secretary of Labor. The option provision may be exercised more than once, but the total extension of performance hereunder shall not exceed 6 months. The Contracting Officer may exercise the option by written notice to the Contractor within **15 calendar days**.

(End of clause)

52.217-9 Option To Extend the Term of the Contract. (MAR 2000)

(a) The Government may extend the term of this contract by written notice to the Contractor within **15 calendar days**.; provided that the Government gives the Contractor a preliminary written notice of its intent to extend at least [60 days unless a different number of days is inserted] days before the contract expires. The preliminary notice does not commit the Government to an extension.

(b) If the Government exercises this option, the extended contract shall be considered to include this option clause.

(c) The total duration of this contract, including the exercise of any options under this clause, shall not exceed [(months)(years)].

(End of clause)

52.222-90 - DEI Discrimination by Federal Contractors. (EO)
52.223-2 Reporting of Biobased Products Under Service and Construction Contracts

52.227-14 Rights in Data-General. (MAY 2014)

52.232-19 Availability of Funds for the Next Fiscal Year. (APR 1984)

Funds are not presently available for performance under this contract beyond [ ]. The Government's obligation for performance of this contract beyond that date is contingent upon the availability of appropriated funds from which payment for contract purposes can be made. No legal liability on the part of the Government for any payment may arise for performance under this contract beyond [ ], until funds are made available to the Contracting Officer for performance and until the Contractor receives notice of availability, to be confirmed in writing by the Contracting Officer.

(End of clause)

8.406-4 Termination for cause.

52.236-12 Cleaning Up. (APR 1984)

52.236-13 Accident Prevention. (NOV 1991)

52.237-1 Site Visit. (APR 1984)

52.242-15 Stop-Work Order. (AUG 1989)

52.249-2 Termination for Convenience of the Government (Fixed-Price). (APR 2012)

52.249-8 Default (Fixed-Price Supply and Service). (APR 1984)

52.252-2 Clauses Incorporated by Reference. (FEB 1998)

This contract incorporates one or more clauses by reference, with the same force and effect as if they were given in full text. Upon request, the Contracting Officer will make their full text available. Also, the full text of a clause may be accessed electronically at this/these address(es):

For FAR Clauses - http://arnet.gov/far/index.html
For DOI Clauses - www.doi.gov/pam/aindex.htm

(End of clause)

DOI ELECTRONIC INVOICING Electronic Invoicing and Payment Requirements - Invoice Processing Platform (IPP) (February 2021)

Payment requests must be submitted electronically through the U. S. Department of the Treasury's Invoice Processing Platform System (IPP).

"Payment request" means any request for contract financing payment or invoice payment by the Contractor. To constitute a proper invoice, the payment request must comply with the requirements identified in the applicable Prompt Payment clause included in the contract, or the clause 52.212-4 Contract Terms and Conditions - Commercial Items included in commercial item contracts. The IPP website address is: https://www.ipp.gov.

Under this contract, the following documents are required to be submitted as an attachment to the IPP invoice [**Copy of the original invoice send to the Contracting Officer**]: chantal_bashizi@ios.doi.gov

The Contractor must use the IPP website to register access and use IPP for submitting requests for payment. The Contractor Government Business Point of Contact (as listed in SAM) will receive enrollment instructions via email from the Federal Reserve Bank of St. Louis (FRBSTL) within 3 - 5 business days of the contract award date. Contractor assistance with enrollment can be obtained by contacting the IPP Production Helpdesk via email IPPCustomerSupport@fiscal.treasury.gov or phone (866) 973-3131.

If the Contractor is unable to comply with the requirement to use IPP for submitting invoices for payment, the Contractor must submit a waiver request in writing to the Contracting Officer with its proposal or quotation.

(End of Local Clause)

52.225-25 Prohibition on Contracting with Entities Engaging in Certain Activities or Transactions Relating to Iran-Representation and Certifications. (JUN 2020)

52.232-40 Providing Accelerated Payments to Small Business Subcontractors. (MAR 2023)