U.S. Department of Veterans Affairs

100% CONSTRUCTION + BID DRAWING
10/06/2023

PROJECT LOCATION:
G.V. (Sonny) Montgomery VAMC

1500 E Woodrow Wilson Ave, Jackson, MS 39216

PROJECT TITLE:
EHRM-TASS

BUILDING NUMBER:
5

ARCHITECTS + ENGINEERS:
BANCROFT ARCHITECTS + ENGINEERS

3300 Dundee Rd
Northbrook IL, 60062
T:847.952.9362
www.bancroft-ae.com

PROJECT NUMBERS:

CONTRACT NUMBER:	36C77623C0052
STATION PROJECT NUMBER:	586-22-703
BANCROFT-AE PROJECT NUMBER:	22-131

N

3 **CAMPUS MAP**
1/16" = 1'-0"

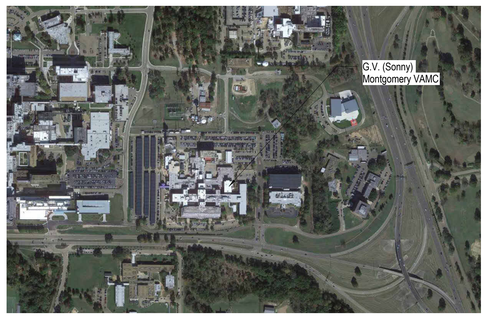

N

2 **VICINITY MAP**
1 1/2" = 1'-0"

DRAWING INDEX

SHEET NUMBER	SHEET TITLE	35%	65%	95%
00-GENERAL				
G-001	GENERAL - COVER SHEET	•	•	•
GI001	GENERAL - CONTRACTOR AND BASIS-OF-DESIGN PROTOCOL NOTES	•	•	•
GI002	GENERAL - PROTECTION PROTOCOL, SCOPE OF WORK AND MISC. NOTES	•	•	•
GI003	GENERAL - DEMOLITION NOTES	•	•	•
GI104	GENERAL - LIFE SAFETY PLAN - 4TH FLOOR	•	•	•
01-HAZARDOUS				
H-104	ASBESTOS FLOOR TILE AND MASTIC ABATEMENT			•
06-STRUCTURAL				
S-105	STRUCTURAL - FLOOR PLAN 5TH FLOOR			•
S-106	STRUCTURAL - FLOOR PLAN - ROOF			•
07-ARCHITECTURAL				
A-001	ARCHITECTURAL - SYMBOLS, ABBREVIATIONS AND LEGENDS	•	•	•
A-002	ARCHITECTURAL - TYPICAL SHEET NOTES AND LEGENDS	•	•	•
AD103	ARCHITECTURAL - DEMOLITION PLAN AND CEILING - 3RD FLOOR	•	•	•
AD104	ARCHITECTURAL - DEMOLITION PLAN AND CEILING - 4TH FLOOR	•	•	•
AD105	ARCHITECTURAL - DEMOLITION PLAN AND ROOF - 5TH FLOOR	•	•	•
AE103	ARCHITECTURAL - FLOOR PLAN AND CEILING - 3RD FLOOR	•	•	•
AE104	ARCHITECTURAL - FLOOR PLAN AND CEILING - 4TH FLOOR	•	•	•
AE105	ARCHITECTURAL - FLOOR PLAN AND ROOF - 5TH FLOOR	•	•	•
AE401	ARCHITECTURAL - ENLARGED ROOMS		•	•
AE501	ARCHITECTURAL - PARTITION TYPES		•	•
AE502	ARCHITECTURAL - DETAILS		•	•
AE503	ARCHITECTURAL - DETAILS		•	•
AE601	ARCHITECTURAL - DOOR SCHEDULE, DOOR DETAILS, EQUIPMENT PLAN AND SCHEDULE		•	•
AF601	ARCHITECTURAL - FINISH PLAN, SCHEDULES AND DETAILS		•	•
AW601	INTERIORS - SIGNAGE TYPES AND DETAILS			
AW602	INTERIORS - SIGNAGE SCHEDULE AND MOUNTING HEIGHTS			
10 - FIRE PROTECTION				
FX001	FIRE PROTECTION - GENERAL NOTES, SYMBOLS AND ABBREVIATIONS			•
FD100	FIRE PROTECTION - 4TH FLOOR DEMO PLAN			•
FX104	FIRE PROTECTION - 4TH FLOOR - NEW WORK			•
FX500	FIRE PROTECTION - DETAILS			•
11 - PLUMBING				
P-001	PLUMBING - GENERAL NOTES, SYMBOLS AND ABBREVIATIONS			•
PD103	PLUMBING DEMOLITION PLAN - LEVEL 3			•
PD104	PLUMBING DEMOLITION PLAN - LEVEL 4			•
P-103	PLUMBING PLAN - LEVEL 3			•
P-104	PLUMBING PLAN - LEVEL 4			•
P-105	PLUMBING PLAN - LEVEL 5			•
P-501	PLUMBING - DETAILS			•
P-502	PLUMBING - DETAILS			•
P-601	PLUMBING - DOMESTIC WATER RISER DIAGRAM			•
P-701	PLUMBING - SCHEDULES			•
13-MECHANICAL				
M-001	MECHANICAL - GENERAL NOTES, SYMBOLS AND ABBREVIATIONS			•
MD104	MECHANICAL - DEMOLITION PLAN - 4TH FLOOR			•
MD105	MECHANICAL - DEMOLITION PLAN - 5TH FLOOR			•
MD106	MECHANICAL - DEMOLITION PLAN - ROOF			•
MPD105	MECHANICAL - DEMOLITION PIPING PLAN - 5TH FLOOR			•
MV104	MECHANICAL - VENTILATION PLAN - 4TH FLOOR			•
MV105	MECHANICAL - VENTILATION PLAN - 5TH FLOOR			•
MV106	MECHANICAL - VENTILATION PLAN - ROOF			•
MP101	MECHANICAL - PIPING PLAN - 1ST FLOOR			•
MP104	MECHANICAL - PIPING PLAN - 4TH FLOOR			•
MP105	MECHANICAL - PIPING PLAN - 5TH FLOOR			•
MP106	MECHANICAL - PIPING PLAN - ROOF			•
MC500	MECHANICAL - AIRFLOW DIAGRAM - 4TH FLOOR			•
M-501	MECHANICAL DETAILS			•
M-502	MECHANICAL DETAILS			•
M-503	MECHANICAL DETAILS			•
M-504	MECHANICAL DETAILS			•
M-505	MECHANICAL DETAILS			•
M-506	MECHANICAL DETAILS			•

DRAWING INDEX

SHEET NUMBER	SHEET TITLE	35%	65%	95%
M-601	MECHANICAL SCHEDULES			•
M-602	MECHANICAL SCHEDULES			•
M-701	MECHANICAL CONTROLS			•
M-702	MECHANICAL CONTROLS			•
M-703	MECHANICAL CONTROLS			•
14-ELECTRICAL				
E-001	ELECTRICAL - GENERAL NOTES, SYMBOLS AND ABBREVIATIONS		•	•
E-002	ELECTRICAL - SYMBOLS AND ABBREVIATIONS		•	•
EPD104	ELECTRICAL - POWER & FIR ALARM DEMOLITION PLAN, FOURTH FLOOR		•	•
ELD104	ELECTRICAL - LIGHTING DEMOLITION PLAN, FOURTH FLOOR		•	•
EP101	ELECTRICAL - POWER PLAN, FIRST FLOOR			•
EP104	ELECTRICAL - POWER PLAN, FOURTH FLOOR		•	•
EP105	ELECTRICAL - POWER PLAN, FIFTH FLOOR		•	•
EP106	ELECTRICAL - POWER PLAN, ROOF		•	•
EL104	ELECTRICAL - LIGHITNG PLAN, FOURTH FLOOR		•	•
EF104	ELECTRICAL - FIRE ALARM AND DETECTION PLAN, FOURTH FLOOR		•	•
E-501	ELECTRIAL - DETAILS			•
E-502	ELECTRICA - DETAILS			•
E-503	ELECTRICAL - DETAILS			•
E-601	ELECTRICAL - SCHEDULES		•	•
E-701	ELECTRICAL - SINGLE LINE DIAGRAM		•	•
E-702	ELECTRICAL - SINGLE LINE DIAGRAM CALCULATIONS			•
E-801	ELECTRICAL - PANEL SCHEDULES		•	•
15-TELECOMMUNICATION				
T-000	GENERAL NOTES	•		•
T-104	ICT - 4TH FLOOR - TELECOMMUNICATION PLAN	•		•
T-104CBT	ICT- 4TH FLOOR - CABLE TRAY PLAN			•
TD-104	ICT- 4TH FLOOR - TELECOMMUNICATIONS DEMOLITION PLAN	•		•
T-501	ICT - DETAILS	•		•
T-502	ICT- DETAILS	•		•
T-503	ICT - DETAILS	•		•
T-504	ICT - DETAILS	•		•
T-505	ICT - DETAILS			•
T-601	ICT TYP RISERS			•

89

N

1 **REGIONAL MAP**
1/16" = 1'-0"

100% CONSTRUCTION + BID DRAWING	10/06/2023
100% CONSTRUCTION + BID DRAWING	09/28/2023
95% CONSTRUCTION DOCUMENTS	09/01/2023
65% DESIGN DEVELOPMENT	7/27/2023
35% SCHEMATIC DESIGN	6/26/2023
Revisions:	Date:

CONSULTANT

ARCHITECT/ENGINEER OF RECORD

BANCROFT ARCHITECTS + ENGINEERS
3300 Dundee Rd.
Northbrook, IL 60062
T: 847.952.9362
www.bancroft-ae.com

VA CONTRACT NO. 36C77623C0052
Bancroft Project No. 22-131

STAMP

LICENSED ARCHITECT
CROTAN D. ZAKARIJA
001-022363
STATE OF ILLINOIS
10/6/23

Office of Construction and Facilities Management

VA U.S. Department of Veterans Affairs

Drawing Title: GENERAL - COVER SHEET	Phase: 100% CONSTRUCTION + BID DRAWINGS	Project Title: EHRM-TASS	Project Number: 586-22-703
			Building Number: 5
Approved: Project Director	FULLY SPRINKLERED	Location: G.V. (Sonny) Montgomery VAMC	Drawing Number: G-001
		Issue Date: 10/06/2023 · Checked: MTB · Drawn: AM	

VA FORM 08-6231

GENERAL NOTES FOR CONTRACTORS

1. ALL WORK SHALL BE COMPLETED IN ACCORDANCE WITH ALL PUBLISHED APPLICABLE LOCAL / STATE / FEDERAL / NATIONAL CODES, ORDINANCES AND REGULATIONS ALONG WITH ALL RELATED VA DIRECTIVES, DESIGN GUIDES AND MANUALS, SPECIFICATIONS AND STANDARDS PLUS ALL VA REQUIREMENTS (FEDERAL AND LOCAL) THAT ARE PROJECT SPECIFIC TO THE DOCUMENTED SCOPE OF WORK ON THIS SITE.

2. EACH CONTRACTOR SHALL HAVE PUBLIC LIABILITY, PROPERTY DAMAGE AND WORKMAN'S COMPENSATION INSURANCE AS REQUIRED BY THE VA IN THE BIDDING DOCUMENTATION. CONTACT THE VA/CO DURING THE BIDDING PHASE WITH ANY QUESTIONS, VERIFICATIONS, AND DOCUMENTATION NECESSARY CONCERNING ALL REQUIREMENTS FOR PROJECT INSURANCE COVERAGE.

3. BEFORE SUBMITTING A BID, ALL CONTRACTORS WILL CAREFULLY EXAMINE THE DRAWINGS AND SPECIFICATIONS SO AS TO BE THOROUGHLY FAMILIAR WITH ALL THE CONTRACT REQUIREMENTS. EACH BIDDER SHOULD THEN VISIT THE SITE OF THE WORK TO BECOME ACQUAINTED WITH ALL VISIBLE FIELD CONDITIONS AFFECTING THE CONTRACT, SUCH AS OBSTACLES WHICH MAY BE ENCOUNTERED AND ALL OTHER CONDITIONS RELATIVE TO WHAT COULD AFFECT/IMPACT THE WORK OR BE AFFECTED BY THE PERFORMANCE OF THE WORK.

4. IF AWARDED THE CONTRACT, THE CONTRACTORS SHALL NOT BE ALLOWED ANY EXTRA COMPENSATION BY REASON OF ANY UNFORESEEN DIFFICULTIES OR OBSTACLES WHICH THE BIDDER COULD HAVE REASONABLY ANTICIPATED PRIOR TO BIDDING. SHOULD ANY DISCREPANCIES, ERRORS, CONFLICT OR ITEMS NEEDING CLARIFICATION BE DISCOVERED IN THE PLANS AND/OR SPECIFICATIONS, THE CONTRACTOR SHALL NOTIFY THE VA/COR PRIOR TO SUBMITTING A BID AND THE VA/COR BEFORE STARTING ANY OF THE WORK.

5. CONTRACTORS SHALL REFERENCE ALL DRAWINGS IN ALL SECTIONS OF WORK FOR FULLY DEFINING THEIR SCOPE OF WORK RESPONSIBILITIES AND COORDINATE SAME WITH THE GENERAL/PRIME CONTRACTOR. SUBCONTRACTORS AND SUPPLIERS FOR EACH TRADE ARE ADVISED THAT INFORMATION PERTINENT TO THEIR SCOPE OF WORK ALSO OCCURS IN OTHER SECTIONS OF THE DRAWINGS AND THE COMPLETE SET OF CONTRACT DOCUMENTS.

6. ALL ENGINEERING SYSTEMS WORK INCLUDED IN THE CONTRACT DRAWINGS SHALL BE TAKEN IN A SENSE AS A DIAGRAMMATIC REPRESENTATION OF ITS INTENDED PLACEMENT AND DISTRIBUTION WITHIN THE GENERAL PROXIMITY WHERE SHOWN. THE SIZE AND THE MEANS OF RUNNING DISTRIBUTION SYSTEMS ARE SHOWN BUT IT IS NOT INTENDED TO SHOW EVERY CONNECTION, FITTING, OFFSET, SUPPORT ELEMENT, OR EVERY STRUCTURAL DIFFICULTY THAT CAN BE ENCOUNTERED DURING THE INSTALLATION OF THE WORK.

7. PROJECT LIMIT LINES ARE SHOWN ON THE DRAWINGS FOR ORIENTATION PURPOSES ONLY AND SHOULD NOT BE CONSTRUED TO INDICATE THE FULL EXTENT OR LIMITS OF THE AREA(S) OF WORK.

8. EACH CONTRACTOR PRIOR TO THE COMMENCEMENT OF WORK SHALL FULLY COORDINATE AND VERIFY WITH ALL OTHER CONTRACTORS, OTHER TRADES AND THE VA/COR CONCERNING ALL SPACE REQUIREMENTS FOR THIS PROJECT. THE GENERAL/PRIME CONTRACTOR SHALL BE RESPONSIBLE FOR COMMUNICATING, DOCUMENTING AND COORDINATING ALL SPACE REQUIREMENTS WITH THE VA/COR TO AVOID CONFLICTS AND MISCOMMUNICATION.

9. ALL EXISTING BUILDING UTILITIES AND INFRASTRUCTURE SERVICES SYSTEMS THAT FEED OTHER SPACES OUTSIDE THE DEMISED PROJECT AREA AND THAT ARE LOCATED WITHIN THE AREA OF WORK, THEREBY INTERFERING WITH THE NEW CONSTRUCTION, SHALL BE REROUTED AND RELOCATED AS REQUIRED TO MAINTAIN FULL SERVICE TO THE AFFECTED AREAS.

10. ALL FINISHED AREAS ADJACENT TO OR INCLUDED WITHIN THE AREA(S) OF CONSTRUCTION ALONG WITH ALL PUBLIC PROJECT ACCESS ROUTES SHALL BE PROTECTED FROM DUST AND DIRT THROUGH THE USE OF VA/COR APPROVED DUSTPROOF PROTECTION. SEE THE OCCUPIED AREA PROTECTION PROTOCOLS PROVIDED IN THE "GENERAL" DRAWINGS SECTION AND COORDINATE ALL SITE SPECIFIC CONDITIONS IMPACTS ENCOUNTERED WITH THE VA/COR.

11. DO NOT SCALE THE DRAWINGS. USE THE GIVEN DIMENSIONS.

12. THE GENERAL/PRIME CONTRACTOR SHALL BE RESPONSIBLE FOR COORDINATING ALL SHOP DRAWING REQUIREMENTS WITH ALL OF THE AFFECTED TRADES, THE VA/COR AND WITH THE AE.

13. OBTAIN ALL REQUIRED VA/COR AUTHORIZATIONS BEFORE BEGINNING ANY DEMOLITION WORK OR NEW CONSTRUCTION, INCLUDING TEMPORARY BARRICADES AND PROTECTION WORK.

14. EACH CONTRACTOR SHALL MAINTAIN A COMPETENT OSHA-30 FOREMAN OR EQUALLY QUALIFIED DIRECT REPRESENTATIVE ON THE JOB SITE AT ALL TIMES.

15. EACH CONTRACTOR SHALL COOPERATE AND COORDINATE WITH THE GENERAL/PRIME CONTRACTOR'S SUPERINTENDENT AND WITH THE FOREMAN OF ALL OTHER TRADES IN ORDER THAT THERE BE NO DELAYS IN THE EXECUTION AND COMPLETION OF THE WORK.

16. DURING CONSTRUCTION EACH CONTRACTOR SHALL KEEP ON SITE ACCURATE FIELD RECORDS OF ALL CONCEALED AND VISUALLY ACCESSIBLE WORK THAT DIFFERS FROM THE CONTRACT DRAWINGS/DOCUMENTS. THESE AS-BUILT MARKED-UP RECORD DRAWINGS/DOCUMENTS WILL BE KEPT UP TO DATE BY THE GENERAL/PRIME CONTRACTOR AND PROVIDED TO THE VA/COR FOR DISTRIBUTION AT THE COMPLETION OF THE PROJECT.

17. IT SHALL BE THE RESPONSIBILITY OF EACH CONTRACTOR TO ADEQUATELY PROTECT EXISTING CONSTRUCTION AND FINISHES TO REMAIN IN PLACE DURING BOTH THE DEMOLITION AND CONSTRUCTION SEQUENCES OF WORK. ANY DAMAGE TO SUCH AREAS SHALL BE RESTORED AND REFINISHED TO A "LIKE-NEW" CONDITION PRIOR TO THE VA/COR'S ACCEPTANCE OF THAT WORK.

18. THE GENERAL/PRIME CONTRACTOR IS RESPONSIBLE FOR THE PATCH, REPAIR, REFINISHING AND/OR REPLACEMENT OF ALL CONSTRUCTION, MATERIALS, ASSEMBLIES, EQUIPMENT, SIGNAGE AND FINISHES DAMAGED BY THE PROJECT DEMOLITION, TEMPORARY CONSTRUCTION, NEW CONSTRUCTION OR THE MOVEMENT OF PERSONNEL, TOOLS, EQUIPMENT, MATERIALS, ETC. BOTH INSIDE AND OUTSIDE OF THE DESIGNATED AREAS OF WORK.

19. PROVIDE THE CUTTING AND PATCHING FOR ALL DEMOLITION WORK AND ALL NEW CONSTRUCTION WORK BEING PERFORMED OUTSIDE OF THE PROJECT LIMIT LINES AS REQUIRED TO PROPERLY COMPLETE THE PROJECT SCOPE OF WORK.

20. ALL CUTTING, CORING AND DRILLING OF EXISTING CONCRETE AND MASONRY CONSTRUCTION SHALL NOT DAMAGE EXISTING REINFORCING STEEL, PIPING, CONDUITS OR OTHER CONCEALED CONSTRUCTION WITHIN. PRIOR TO CORING, DRILLING, CUTTING OR PERFORMING ANY BREAKING EFFORTS, PROVIDE PENETRATING FIELD X-RAYING OF THE INTENDED AREAS AND DOCUMENT THE EXACT SIZE AND LOCATIONS OF ALL SUCH INTERFERENCES. COORDINATE WITH AND OBTAIN VA/COR APPROVAL BEFORE PROCEED WITH ANY SUCH REQUIRED PENETRATIONS WORK.

21. RELOCATIONS OF ANY INFRASTRUCTURE DISTRIBUTION SYSTEMS OR EQUIPMENT, WHICH MAY ALTER THE ARCHITECTURAL OR STRUCTURAL CONSTRUCTION, MUST BE APPROVED FIRST BY THE VA/COR PRIOR TO STARTING ITS RELOCATION.

22. THE GENERAL/PRIME CONTRACTOR IS RESPONSIBLE TO PROVIDE THE REMOVAL OF ALL CONSTRUCTION DEMOLITION DEBRIS, SPOIL AND MATERIALS FROM THE PROJECT SITE ON A DAILY BASIS UNLESS SPECIFICALLY REFERENCED OTHERWISE IN THE PROJECT SPECIFIC LOGISTICAL SEQUENCING REQUIREMENTS.

23. CONTRACTORS TO ENSURE ALL FIRE RESISTIVE RATINGS ARE MAINTAINED PER LOCATIONS SHOWN ON THE DRAWINGS AND AS DISCOVERED IN THE FIELD. ALL PENETRATIONS ARE TO BE SEALED BY AN APPROVED UL FIRESTOPPING SYSTEM. SEAL ALL EXISTING PENETRATIONS EXPOSED DURING CONSTRUCTION AS PER THE APPROVED UL FIRESTOPPING SYSTEM INSTALLATION REQUIREMENTS. FOLLOW THE MANUFACTURE'S DESIGN RECOMMENDATIONS FOR THE PROPER FIRE STOPPING MATERIAL TO BE USED IN EACH SPECIFIC APPLICATION.

24. ALL FIRESTOPS SHALL MATCH THE FIRE RATING OF THE CONSTRUCTION BEING PENETRATED, SUCH AS WALLS, FLOORS, CEILINGS, PARTITIONS ETC. AND SHALL COMPLY WITH ALL CODE REQUIREMENTS. USE ONLY A SINGLE (FMRC) APPROVED MANUFACTURERS LINE OF PRODUCTS FOR ALL PROJECT FIRESTOPPING.

25. THE BASIS OF DESIGN FOR ALL FIRE STOPPING WILL BE PRODUCTS AS MANUFACTURED BY THE 3M COMPANY.

26. PROVIDE AN HOURLY RATED FIRESTOP AT ALL PENETRATIONS OF RATED CONSTRUCTION AND/OR ASSEMBLIES, WHETHER NEW OR EXISTING, AND AS A DIRECT RESULT OF THE PROJECT DEMOLITION WORK OR NEW CONSTRUCTION. WHERE COMBUSTIBLE PENETRANTS OCCUR USE A FIRE RATED INTUMESCENT MATERIAL AND WHERE NONCOMBUSTIBLE PENETRANTS OCCUR USE A FIRE RATED ENDOTHERMIC MATERIAL. ALL FIRESTOPPING WORK MUST BE APPROVED BY THE VA/COR BEFORE CONCEALED BY CONSTRUCTION.

OCCUPIED AREA PROTECTION PROTOCOLS

VERIFY AND COORDINATE ALL PROTECTION REQUIREMENTS TO BE PROVIDED FOR EACH SPECIFIC AREA OR LOCATION OF SCHEDULED WORK WITH THE VA/COR, BEFORE BEGINNING ANY WORK. WHEN PERFORMING CONSTRUCTION WORK (DEMOLITION OR NEW) IN OCCUPIED SPACES, THE FOLLOWING PROTECTION PROTOCOLS WILL BE FOLLOWED ON A DAILY BASIS UNLESS MODIFIED IN WRITING BY THE VA/COR ON A CASE BY CASE BASIS:

1. CAREFULLY MOVE/RELOCATE ANY SIGNAGE, WALL HUNG ITEMS, BLINDS, CURTAINS, ETC. THAT ARE WITHIN THE AREA/ZONE WHERE THE WORK IS TO BE ACCOMPLISHED AND IN DANGER OF BEING DAMAGED BY THE PERFORMANCE OF THE WORK, INCLUDING DAMAGE THAT CAN BE CAUSED BY FALLING OBJECTS, DUST OR MOISTURE. NOTE: THIS ALSO APPLIES TO THE DIRECT ACCESS ROUTE(S) THRU THE OCCUPIED AREA(S) TO AND FROM THE ACTUAL WORK AREA/ZONE. NOTE: THE VA/COR WILL BE RESPONSIBLE TO MOVE/RELOCATE ANY FURNITURE, EQUIPMENT, BOXES, FILES, USER BELONGINGS, ETC. THAT WOULD BE IN THE AREA OF WORK AND OBSTRUCT/INTERFERE WITH THE PERFORMANCE OF THE CONTRACTOR'S WORK. COORDINATE ALL REQUIRED VA RELOCATIONS WITH VA/COR.

2. CAREFULLY PROVIDE FULL PROTECTIVE DUST, MOISTURE AND DAMAGE PREVENTION BARRIERS/COVERS FOR ALL SUCH ITEMS ADDRESSED ABOVE INCLUDING THE ADDITIONAL PROTECTION OF ALL WALL SURFACES/FINISHES, WINDOWS/GLAZING, DOORS, FRAMES, HARDWARE, CARPETING, FLOOR COVERINGS, WALL BASE, ELECTRICAL DEVICES, WALL/CEILING MOUNTED EQUIPMENT & CONTROLS, CEILING CONSTRUCTION, TILE, GRID, WALL ANGLES, LIGHT FIXTURES, DIFFUSERS, GRILLES, LIFE SAFETY DEVICES, FIRE SPRINKLER HEADS, ETC.

3. FLOOR FINISHES SHALL BE PROTECTED THROUGHOUT THE AREA WITH A 6 MIL HEAVY DUTY STRING REINFORCED FIRE RETARDANT POLYETHYLENE SHEETING (VISQUEEN) AND/OR TEMPORARY TARPAULIN(S)/DROP CLOTH(S) AS A MINIMUM FOR DUST, MOISTURE AND VERY LIGHT FOOT TRAFFIC PROTECTION.

4. ALL MAIN TRAFFIC AREAS TO AND INSIDE THE WORK ZONE/AREAS SHALL HAVE ADDITIONAL PROTECTION PROVIDED OVER THE 6 MIL HEAVY DUTY STRING REINFORCED FIRE RETARDANT POLYETHYLENE SHEETING (VISQUEEN), IN THE FORM OF FULL SHEETS OF 3/16 " TEMPERED HARDBOARD (MASONITE) 4'X8' PANELS. ALL MASONITE PANELS SHALL BE FIRMLY HELD TOGETHER AND SECURED IN PLACE VIA THE USE OF AN INDUSTRY APPROVED 2" HEAVY DUTY CONSTRUCTION ADHESIVE TAPE, INTENDED FOR THIS APPLICATION. NOTE: ALL BOARD TO BOARD JOINTS WILL BE FULLY TAPED THE LENGTH OF THE JOINT AND ALL BOARD TO VISQUEEN JOINTS WILL BE TAPED AT 4' ON CENTER WITH A MINIMUM 8 " LENGTH OF TAPE. PAINTERS TAPE AND/OR MASKING TAPE ARE NOT CONSIDERED EQUIVALENTS TO THE HEAVY DUTY CONSTRUCTION ADHESIVE TAPE BEING SPECIFIED.

5. CONSTRUCT A TEMPORARY FULL HEIGHT, FULLY SEALED, CONTAINMENT ENCLOSURE (1-HOUR RATED) AROUND ALL CONSTRUCTION AREAS/ZONES IN ORDER TO CONTAIN AS MUCH DUST AND DEBRIS AS POSSIBLE DURING THE PERFORMANCE OF ANY DEMOLITION, CONSTRUCTION AND CLEAN-UP WORK.

6. THE TEMPORARY FULL HEIGHT CONTAINMENT ENCLOSURES SHOULD BE CONSTRUCTED OF A MINIMUM 6 MIL HEAVY DUTY STRING REINFORCED FIRE RETARDANT POLYETHYLENE SHEETING (VISQUEEN) WITH THE USE OF THE APPROPRIATE TELESCOPICALLY ADJUSTABLE ALUMINUM OR METAL VERTICAL SPRING LOADED SUPPORT STUDS/POLES. FULL HEIGHT FOAM PADDED RAILS, PRESSURE FIT AT ALL PERIMETER WALL/PARTITION CONNECTION CONDITIONS ARE TO BE UTILIZED IN ORDER TO MINIMIZE THE USE OF TAPE SEALS ON ALL FINISHED WALL SURFACES. THESE CONTAINMENT ENCLOSURES ARE LIMITED IN USE - REFER TO INFECTION CONTROL PLANS AND DETAILS FOR LOCATIONS.

7. WHEN ALL WORK IS COMPLETED FOR THE PREARRANGED SPECIFIC LOCATION(S), SCHEDULED TASKING AND IDENTIFIED PERIOD OF TIME THE ENTIRE AREA IS TO BE FULLY CLEANED-UP, ALL TEMPORARY CONTAINMENT ENCLOSURES AND PROTECTION REMOVED WITH ALL ITEMS IDENTIFIED IN NOTE #1 RETURNED TO THEIR PRIOR FUNCTIONING POSITIONS. NOTE: FULLY CLEANED-UP MEANS COMMERCIALLY VACUUM CLEANED WITH ALL SURFACES BEING FULLY WIPED DOWN AND DUST FREE AS THE CONTRACTOR ACCEPTED THE AREA/SPACE PRIOR TO PERFORMING THE WORK.

8. ALL SPACES WILL BE RETURNED TO THE USER, BY THE CONTRACTOR, AS A COMMERCIALLY CLEAN ENVIRONMENT WITH ALL OPEN CONSTRUCTION SURFACES SEALED WITH TEMPORARY CONSTRUCTION MATERIALS INCLUDING THE USE OF 6 MIL HEAVY DUTY STRING REINFORCED FIRE RETARDANT POLYETHYLENE SHEETING (VISQUEEN), IN ORDER TO AVOID DUST PARTICLES FROM THE CONSTRUCTION AREA MIGRATING INTO THE OCCUPIED USER'S AREA/SPACE/ROOM(S).

9. UNLESS DIRECTLY SPECIFIED AND CONFIRMED BY THE VA/COR OTHERWISE, ALL TEMPORARY PROTECTION AND ENCLOSURES ARE TO BE SET-UP AND KNOCKED-DOWN ON A DAILY BASIS SUCH THAT THE USERS OF THE OCCUPIED AREAS ARE NOT TO BE INCONVENIENCED AND PREVENTED FROM FUNCTIONING WITHIN THEIR SPACE/AREA/ROOM(S) DURING THEIR NORMAL BUSINESS HOURS OF OPERATION.

10. THE BASIS OF DESIGN FOR ALL 6 MIL HEAVY DUTY STRING REINFORCED FIRE RETARDANT POLYETHYLENE SHEETING WILL BE IN FULL COMPLIANCE WITH NFPA 701-04, ASTM E84 AND CPAI 84 SECTION 6. IT SHALL BE MANUFACTURED WITH 3 PLY CONSTRUCTION CONSISTING OF FIRE RETARDANT VIRGIN POLYETHYLENE IN THE (2) OUTER LAYERS OF PLASTIC WITH A DIAMOND SCRIM REINFORCING MESH PLACED BETWEEN.

11. MOBILE CONTAINMENT SYSTEMS MAY BE UTILIZED WHERE APPLICABLE, IF APPROVED FOR USE BY THE VA/COR. MOBILE UNITS SHALL BE FULLY EQUIPPED WITH A NEGATIVE AIR HEPA FILTRATION SYSTEM THAT IS IN COMPLIANCE WITH THE INFECTION CONTROL REQUIREMENTS OF EACH SPECIFIC AREA OF WORK AND TASK BEING PERFORMED.

BASIS OF DESIGN (BOD) COMPLIANCE PROTOCOLS

INTENT:

1. TO ORGANIZE AND IDENTIFY THE "EQUIVALENCY SUBSTITUTION PROCESS " IN ORDER TO FORMALIZE THE PROCESS, CLARIFY RESPONSIBILITIES, PROACTIVELY MANAGE THE PROCESS AND MINIMIZE COSTLY DELAYS IN THE EXECUTION OF THE WORK.

2. THERE ARE NO INTENDED RESTRICTIONS LIMITING COMPETITION ON THE EQUIVALENT SUBSTITUTION OF MATERIALS, EQUIPMENT, HARDWARE, FINISHES, CONTROLS, SYSTEMS AND THEIR INCLUSIVE PARTS, DETAILED ASSEMBLIES, RELATED DESIGN ELEMENTS AND PERFORMANCE CHARACTERISTICS, UNLESS AS IDENTIFIED IN THE BID SOLICITATION.

SUMMARY DESCRIPTION:

1. THE BASIS OF DESIGN (BOD) INCORPORATES THE DESIGN INTENT AND PERFORMANCE BASED CHARACTERISTICS FOR ALL MATERIALS, SYSTEMS AND WORKMANSHIP THAT IS INCLUDED IN THE CONSTRUCTION DOCUMENTS AND REFERENCED BY SAME.

2. THE BOD COMPLIANCE PROTOCOLS ARE TO BE FOLLOWED FOR ALL PROPOSED EQUIVALENT SUBSTITUTIONS, DEPARTURES OR ADJUSTMENTS FROM THE CONSTRUCTION DOCUMENT DRAWINGS, DETAILING, AND SPECIFICATIONS PROVIDED THE SUBSTITUTIONS, DEPARTURES, OR ADJUSTMENTS MEET THE DESIGN INTENT, SCOPE OF WORK (SOW) CRITERIA REQUIREMENTS, AND PERFORMANCE BASED CHARACTERISTICS.

3. NO SUCH EQUIVALENT SUBSTITUTION, DEPARTURES OR ADJUSTMENTS WILL BE ALLOWED WITHOUT FIRST GOING THROUGH THE BOD COMPLIANCE PROTOCOLS PROCESS AND OBTAINING THE GOVERNMENT 'S APPROVAL FROM THE CONTRACTING OFFICER (CO).

BOD COMPLIANCE PROTOCOLS

1. THE BOD COMPLIANCE PROTOCOLS APPLY TO ALL MATERIALS, EQUIPMENT, HARDWARE, FINISHES, CONTROLS, ENGINEERING SYSTEMS AND THEIR INCLUSIVE PARTS, DETAILED ASSEMBLIES. IMPACTED ELEMENTS OF WORK PLUS ALL RELATED DESIGN CRITERIA ELEMENTS AND SPECIFIED PARAMETERS THAT ARE CONTAINED WITHIN THE BID/ISSUED FOR CONSTRUCTION DRAWINGS AND SPECIFICATIONS DOCUMENTATION, OR AS SPECIFICALLY REFERENCED BY SAME.

2. SPECIFIC DESIGN INTENT AND PERFORMANCE CHARACTERISTICS REQUIRING BOD COMPLIANCE ANALYSIS WILL VARY WITH EACH SPECIFIC ITEM BEING PROPOSED AS AN EQUIVALENT SUBSTITUTION AND WILL NEED TO BE FULLY COMPARED AND ANALYZED TO ESTABLISH BOD EQUIVALENCY COMPLIANCE.

3. CRITICAL DESIGN CHARACTERISTICS AND ELEMENTS ARE SPECIFIC TO EACH ITEM NEEDING CONSIDERATION AND COULD CONSIST OF, BUT NOT LIMITED TO, CRITERIA SUCH AS DIMENSIONAL LOGISTICS, PERFORMANCE CHARACTERISTICS, CAPACITY, DUTY REQUIREMENTS, OPERATIONAL EFFICIENCIES, ACOUSTICAL REQUIREMENTS, UTILITIES IMPACTS, CONNECTION ADJUSTMENTS, DETAILING DEPARTURES, FRAMING ALTERATIONS, ROUGH IN REQUIREMENTS, WEIGHT INCREASES AND/OR DISTRIBUTIONS, STRUCTURAL IMPACTS, ATTACHMENTS, SUPPORTS, FINISHES, AVAILABILITY, COMPATIBILITY, CONSTRUCTABILITY, WARRANTIES, SERVICE LIFE, MAINTENANCE REQUIREMENTS, ENVIRONMENTAL CONSIDERATIONS, LEED RELATED DESIGN CONSIDERATIONS, ETC.

4. A VERY CRITICALLY IMPORTANT DESIGN CHARACTERISTIC OF ALL BOD ITEMS NEEDING TO BE FULLY EVALUATED AND PROPERLY COORDINATED WOULD BE THE DESIGN AND LAYOUT OF DIMENSIONAL LOGISTICS REQUIREMENTS. THOSE CRITICAL PARAMETERS COULD CONSIST OF, BUT NOT LIMITED TO, ALL DIMENSIONAL ELEMENTS THAT AFFECT SIZE, HEIGHT, WIDTH, DEPTH, THICKNESS, PLACEMENT, SPACING, CLEARANCES, ACCESS, MOUNTING, CONNECTIONS AND LOCATION REQUIREMENTS, INSTALLATION TOLERANCES, OPERABLE ELEMENT CLEARANCES, ETC., ALL OF WHICH COULD IMPACT OTHER AREAS OF CONSTRUCTION OR COMPONENTS OF WORK REQUIRING ADJUSTMENTS IN ORDER TO COMPLY WITH THE DESIGN INTENT.

5. CONTRACTORS WILL BE RESPONSIBLE TO FULLY IDENTIFY ALL PROPOSED EQUIVALENT SUBSTITUTIONS, DEPARTURES, IMPACTS, ALTERATIONS AND ADJUSTMENTS FROM THE "BASIS OF DESIGN" INTENT TO THE GENERAL/PRIME CONTRACTOR DURING THE BIDDING PROCESS AND OBTAIN THEIR APPROVAL BEFORE COMPLETING THEIR PRICING AND SUBMITTING A BID TO SAME.

6. IF A PROPOSED EQUIVALENT SUBSTITUTION ITEM WILL REQUIRE THAT ALTERATIONS AND/OR ADJUSTMENTS NEED TO BE MADE, TO THE WORK OF THE PROVIDING CONTRACTOR, THE WORK OF OTHER CONTRACTORS OR THE WORK OF THE VA, THE SUBMITTING CONTRACTOR SHALL BE FULLY RESPONSIBLE TO INFORM AND ADVISE THE GENERAL/PRIME CONTRACTOR OF ANY AND ALL SUCH NECESSARY IMPACTS REQUIRED AS A PART OF THEIR BIDDING AND FUTURE CONTRACTUAL SCOPE OF WORK RESPONSIBILITIES.

7. THE CONTRACTOR PROPOSING THE EQUIVALENT SUBSTITUTION SHALL BE RESPONSIBLE FOR ALL RELATED WORK AND SHALL IDENTIFY, VERIFY, COORDINATE AND PROVIDE ENGINEERED SOLUTIONS FOR ALL IMPACT ISSUES AFFECTING INFRASTRUCTURE SYSTEMS, UTILITIES SERVICES, BUILDING STRUCTURE, SURROUNDING ELEMENTS, AND SYSTEMS AFFECTED FROM WEIGHT DIFFERENTIALS, REVISED LOADING CHARACTERISTICS, CONNECTION AND MOUNTING VARIANCES, INSTALLATION CONFLICTS AND DETAILING ALTERATIONS OR ADJUSTMENTS, ETC. CAUSED BY THE EQUIVALENT SUBSTITUTION REQUIREMENTS.

8. SPECIAL ATTENTION NEEDS TO BE PAID TO ANY SYSTEMS EQUIPMENT AND MATERIAL PERFORMANCE CHARACTERISTICS INCLUDING ALL ASPECTS OF THEIR DIMENSIONAL LOGISTICS FEATURES AND REQUIREMENTS ALONG WITH ANY STRUCTURAL AND UTILITIES IMPACTS.

9. EACH EQUIVALENT SUBSTITUTION REQUEST ALONG WITH ANY AND ALL IMPACTS, VARIANCES, ALTERATIONS OR ADJUSTMENTS REQUIRED TO OTHER ELEMENTS OF WORK WILL ALSO REQUIRE VA/CO APPROVAL(S) BEFORE ANY SUCH REQUEST IS DEEMED APPROPRIATE BY THE GOVERNMENT AND ALLOWED TO PROCEED INTO THE NORMAL SHOP DRAWING PREPARATION, SUBMITTAL AND REVIEW PROCESS.

10. NO REQUEST FOR AN EQUIVALENT SUBSTITUTION REVIEW IS ALLOWED TO BE MADE VIA A SHOP DRAWING SUBMISSION. ANY SUCH SUBMISSION WILL NOT BE REVIEWED AND WILL BE REJECTED AS NON-CONFORMING WITH THE DESIGN INTENT AND NOTED THAT THE CONTRACTOR IS TO FOLLOW THE STANDARD BOD COMPLIANCE PROTOCOLS.

11. ANY UNDOCUMENTED OR UNFORESEEN IMPACTS, VARIANCES, ALTERATIONS OR ADJUSTMENTS REQUIRED TO ELEMENTS OF WORK AS A RESULT OF AN EQUIVALENCY SUBSTITUTION THAT SURFACE DURING THE CONSTRUCTION PHASE SHALL IMMEDIATELY BE MADE KNOWN TO THE GENERAL/PRIME CONTRACTOR WHO WILL IN TURN NOTIFY THE VA/COR. ALL SUCH UNDOCUMENTED OR UNFORESEEN CONDITIONS WILL BE FULLY IDENTIFIED, DOCUMENTED AND SUBMITTED TO THE VA/COR FOR REVIEW, EVALUATION AND DIRECTION(S) ON HOW TO PROCEED.

12. ANY NON-COMPLIANT EQUIVALENT SUBSTITUTIONS WORK FOUND TO BE IN PLACE DURING THE CONSTRUCTION PHASE THAT HAD NOT GONE THROUGH THE BOD COMPLIANCE PROTOCOLS APPROVAL PROCESS AND THAT DOESN 'T HAVE THE VA/CO'S APPROVAL WILL BE SUBJECT TO POSSIBLE REJECTION AND REMOVAL AS DETERMINED BY THE GOVERNMENT.

13. THE FINAL INSTALLATION OF ANY EQUIVALENT SUBSTITUTION AND ITS IMPACTS SHALL NOT COMPROMISE ANY OF THE BOD PERFORMANCE CHARACTERISTICS NOR SHALL IT ENCUMBER ANY OF THE ASSOCIATED DESIGN INTENT LAYOUT AND DIMENSIONAL LOGISTICS REQUIREMENTS.

14. ALL EQUIVALENT SUBSTITUTION INSTALLATIONS AND THEIR IMPACTS TO OTHER SOW ELEMENTS SHALL COMPLY WITH ALL APPLICABLE BUILDING CODES, REGULATIONS AND VA REQUIREMENTS, PLUS ALLOW ANY SYSTEMS, EQUIPMENT AND/OR MATERIALS TO FUNCTION PROPERLY AND SAFELY.

BOD EQUIVALENT SUBSTITUTIONS PROCESS SEQUENCE

STEP 1: BIDDING PHASE

1. ALL BOD PROPOSED EQUIVALENT SUBSTITUTIONS AND THEIR ASSOCIATED IMPACTS ON OTHER SOW ELEMENTS SHALL BE FULLY IDENTIFIED AND COORDINATED WITH THE GENERAL/PRIME CONTRACTOR(S) SUCH THAT THE COST OF ALL ASSOCIATED SCOPE OF WORK IMPACTS DIRECTLY AFFECTING OTHER TRADES SHALL BE INCLUDED IN THE BASE BIDS OF ALL AFFECTED CONTRACTORS. .

STEP 2: CONTRACTORS IDENTIFY PROPOSED EQUIVALENT SUBSTITUTION(S)

1. ALL CONTRACTORS, BEFORE SUBMITTING THEIR REQUEST FOR EQUIVALENT SUBSTITUTION CONSIDERATION SHALL BE RESPONSIBLE TO HAVE FULLY VERIFIED AND CERTIFIED IN WRITING THAT THE DESIGN CHARACTERISTICS OF THE ITEMS THEY WILL BE SUBMITTING FOR BOD COMPLIANCE REVIEW MEETS OR EXCEEDS THE DESIGN INTENT AND PERFORMANCE REQUIREMENTS AS DESIGNED, DETAILED AND SPECIFIED.

STEP 3: CONTRACTORS PREPARE DETAILED COMPARISONS

1. THE REQUESTING CONTRACTOR SHALL PREPARE AND PROVIDE TO THE GENERAL/PRIME CONTRACTOR A FULL LINE ITEM, SIDE-BY-SIDE COMPARISON LISTING SPREAD SHEET OF ALL BOD DESIGN AND MANUFACTURED CHARACTERISTICS VERSUS THE SAME FOR THE EQUIVALENT SUBSTITUTION BEING PROPOSED.

2. ALL EQUIPMENT, MATERIALS OR ASSEMBLY EQUIVALENT SUBSTITUTIONS SHALL BE PROVIDED ON A CONTRACTOR PREPARED ITEMIZED LISTING PER EACH REQUESTED SUBSTITUTION WITH A FULL AND DETAILED COMPARATIVE DESCRIPTION OF ALL SPECIFICATIONS, PERFORMANCE CHARACTERISTICS, CAPACITIES, WEIGHT, DIMENSIONAL LOGISTICS AND KNOWN IMPACTS, DEPARTURES, ALTERATIONS OR ADJUSTMENTS FROM THE ORIGINAL BOD.

3. CONTRACTOR SHALL UTILIZE THE ORIGINAL MANUFACTURER 'S PUBLISHED SPECIFICATIONS AND PRODUCT DATA SHEETS ALONG WITH ANY ADDITIONAL CHARACTERISTICS AND PERFORMANCE CRITERIA REQUIRED AND SPECIFIED IN THE CONSTRUCTION DOCUMENTS AS THE BASIS FOR THE DEVELOPMENT OF THE LINE BY LINE COMPARISON CRITERIA SPREAD SHEET.

STEP 4: CONTRACTORS IDENTIFY RELATED IMPACTS

1. THE REQUESTING CONTRACTOR SHALL BE RESPONSIBLE TO FULLY IDENTIFY AND DOCUMENT ALL PROPOSED EQUIVALENT SUBSTITUTION CAUSED IMPACTS, DEPARTURES, ALTERATIONS OR ADJUSTMENTS REQUIRED FROM THE ORIGINAL BOD REQUIREMENTS WITH THE GENERAL/PRIME CONTRACTOR AS WELL AS ALL AFFECTED CONTRACTORS.

2. SEE THE DETAILED PROTOCOL REQUIREMENTS FOR THE EXTENT OF RESPONSIBILITIES AND DOCUMENTATION REQUIRED FOR THIS CRITICAL ITEM.

STEP 5: CONTRACTOR'S DOCUMENTATION TO GENERAL/PRIME CONTRACTOR

1. CONTRACTORS SHALL COORDINATE WITH THE GENERAL/PRIME CONTRACTOR AS TO THE SPECIFIC DATE THAT EACH IS REQUIRED FOR THE COMPLETION OF THEIR EQUIVALENT SUBSTITUTION SUBMISSION REQUEST DOCUMENTATION AND DELIVERY OF THE COMPLETED PACKAGE(S) TO THEM.

2. CONTRACTORS SHALL FULLY COORDINATE THEIR PREPARATION OF ALL REQUIRED DOCUMENTATION AND EQUIVALENCY SUBSTITUTION REQUIREMENTS WITH THE GENERAL/PRIME CONTRACTOR IN ORDER TO ADDRESS ANY AND ALL IMPACTS ON THE PROJECT SCHEDULE AS WELL AS PERFORMING THEIR REQUIRED FORMALIZED REQUEST FOR EQUIVALENCY SUBSTITUTION SUBMISSION.

3. ALL EQUIVALENT SUBSTITUTION REQUESTS ALONG WITH THEIR REQUIRED SUBMISSION REQUEST DOCUMENTATION SHALL BE DELIVERED TO THE GENERAL/PRIME CONTRACTOR AS REQUIRED BY SAME IN TIME FOR THE GC 'S FIRST SUBMISSION OF THE PROPOSED PROJECT CONSTRUCTION SCHEDULE BEING SUBMITTED TO THE GOVERNMENT FOR REVIEW.

STEP 6: GENERAL/PRIME CONTRACTOR RESPONSIBLE FOR COORDINATION

1. THE GENERAL/PRIME CONTRACTOR SHALL BE RESPONSIBLE TO FULLY IDENTIFY, DOCUMENT, MAKE SUBMISSIONS, TRACK, COORDINATE, OBTAIN CONTRACTING OFFICER (CO) APPROVALS AND INCLUDE THE COST OF ALL SUCH EQUIVALENT SUBSTITUTION, WORK IN THEIR COST OF CONSTRUCTION AS WELL AS ALLOWED FOR WITHIN THEIR PROJECT SCHEDULE.

2. THE GENERAL/PRIME CONTRACTOR HAVING BEEN MADE FULLY AWARE OF POTENTIAL EQUIVALENCY SUBSTITUTIONS AND IMPACTS DURING THE BIDD

GENERAL NOTES - WALL AND CEILING PAINTING

WHEREVER THE WORK BEING PERFORMED BY THIS PROJECT REQUIRES THE REMOVAL/DEMOLITION FROM, OR THE INSTALLATION OF NEW CONDUIT, JUNCTION BOXES, CABINETS, PANELS, DEVICES, EQUIPMENT, ETC., TO FINISH PAINTED SURFACES, THE CONTRACTOR SHALL PROVIDE ALL PAINTING TO THE EXISTING WALL/CEILING SURFACES AND NEW MATERIALS BEING INSTALLED TO MATCH ALL OF THE EXISTING FINISHED CONDITIONS SO THAT WHEN THE WORK PERFORMED IS COMPLETED IT BLENDS WITH THE EXISTING FINISHING DÉCOR AND DOESN'T STAND OUT AS BEING A REPAIR, UNFINISHED OR NEW WORK THAT DOESN'T BLEND WITH THE EXISTING CONDITIONS. PAINTING/REPAINTING SHALL OCCUR IN ALL INSTANCES FROM FLOOR TO CEILING AND FROM A WALL CORNER TO A WALL CORNER CHANGE IN PLANE WITH ALL EXISTING PAINTED SURFACES RECEIVING A NEW FINISH COAT AS A MINIMUM, SEE BELOW:

1. PROVIDE ALL PAINTING AND RELATED WORK AS SHOWN ON THE DRAWING AND/OR AS REASONABLY IMPLIED BY THE SPECIFICATIONS AND THE PROJECT REQUIREMENTS TO PROVIDE A COMPLETELY FINISHED PROJECT.
2. ALL SCRATCHES, DENTS, CRACKS AND/OR OPENINGS ON EXISTING AND NEW WALL SURFACES ARE TO BE FILLED WITH PLASTER PATCH, SPAKLING COMPOUND OR OTHER PRESCRIBED MATERIAL IN AN INDUSTRY APPROVED MANNER AND SANDED SMOOTH TO PROVIDE A "LIKE NEW" SURFACE CONDITION BEFORE PAINTING AND FINISHING.
3. ALL SURFACES ARE TO BE CLEANED FREE OF LOOSE DIRT, DUST, OIL, GREASE AND ALL FOREIGN MATTER JUST PRIOR TO FINISHING.
4. PROVIDE ALL LABOR, MATERIALS, BRUSHES, TOOLS, LADDERS AND ALL EQUIPMENT OF ANY KIND NECESSARY FOR PROPER EXECUTION OF THE WORK.
5. WORKMANSHIP SHALL BE FIRST CLASS IN EVERY RESPECT WITH ALL MATERIALS EVENLY SPREAD AND SMOOTH WITHOUT RUNS, SAGS, OR DEBRIS IN THE FINISHED SURFACE.

   FIRST CLASS WORKMANSHIP: AN INDUSTRY, DISCIPLINE AND SPECIFIC TRADE RECOGNIZED BEST PRACTICES FOR MATERIALS PROVIDED, INSTALLATION TECHNIQUES UTILIZED AND THE FINAL EXECUTION SUCH THAT ALL MATERIALS AND/OR EQUIPMENT IS PROPERLY INSTALLED, FUNCTIONING CORRECTLY, VISUALLY AS INTENDED AND CLEARLY REPRESENTATIVE OF THE HIGHEST QUALITY OF PROFESSIONAL INSTALLATION THAT IS WITHOUT DEFECT.
6. THE PRIME COAT SHALL BE TINTED TO APPROXIMATE SHADE OF FINAL COAT. ALL SECTIONS, SPOTS OR HOT SPOTS AFTER PRIMARY APPLICATION SHALL BE TOUCHED-UP BEFORE APPLYING THE SECOND COAT TO PRODUCE A SMOOTH AND LEVEL SURFACE. THE FINAL COAT SHALL NOT BE APPLIED UNTIL AFTER ALL OTHER TRADES, WHOSE OPERATIONS WOULD BE DETRIMENTAL TO FINISH PAINTING, HAVE FINISHED THEIR WORK IN THE AREAS TO BE PAINTED.
7. WORK NOT INCLUDED: UNLESS OTHERWISE INDICATED, SHOP PRIMING OF FERROUS METAL ITEMS AND FABRICATED COMPONENTS ARE INCLUDED UNDER THEIR RESPECTIVE TRADES. PRE-FINISHED ITEMS ARE NOT INCLUDED. FINISHED METALS SUCH AS ANODIZED ALUMINUM, STAINLESS STEEL, BRONZE, AND SIMILAR METALS WILL NOT BE PAINTED, UNLESS OTHERWISE SPECIFIED. DO NOT PAINT ANY MOVING PARTS OF OPERATING UNITS, OR OVER ANY EQUIPMENT IDENTIFICATION, PERFORMANCE RATINGS, NAMES OR NOMENCLATURE PLATES OR CODE-REQUIRED LABELS.
8. PROTECT WORK OF OTHER TRADES. CORRECT ANY PAINTING RELATED DAMAGES BY CLEANING, REPAIRING OR REPLACING, AND REFINISHING, AS DIRECTED BY THE COR.
9. PROPERLY PREPARE ALL SURFACES TO RECEIVE FINISHES AND APPLY PRIME COATS, PAINTING AND FINISHING MATERIALS IN ACCORDANCE WITH EACH MANUFACTURER'S DIRECTIONS FOR A QUALITY APPLICATION. USE APPLICATORS AND TECHNIQUES BEST SUITED FOR MATERIALS AND SURFACES TO WHICH APPLIED.
10. APPLY ADDITIONAL COATS WHEN UNDERCOATS, STAINS OR OTHER CONDITIONS SHOW THROUGH FINAL PAINT OR FINISHED COAT, UNTIL THE SURFACE FILM IS OF UNIFORM FINISH COLOR AND APPEARANCE.
11. APPLY EACH MATERIAL AT NOT LESS THAN THE MANUFACTURER'S RECOMMENDED SPREADING RATE, TO PROVIDE A TOTAL DRY FILM THICKNESS OF NOT LESS THAN 2.5 MILS FOR ENTIRE COATING SYSTEM OF (1) PRIME AND (2) FINISH COATS FOR 3 COAT WORK ON PAINTED SURFACES. COR SHALL INSPECT BETWEEN EACH PRECEDING COAT.
12. PAINTED SURFACE PREPARATION - COMPLY WITH PAINT MANUFACTURER'S RECOMMENDATIONS FOR EACH MATERIAL TYPE AND SURFACE FINISH AS PER THEIR REFERENCE GUIDE AND SPECIFICATIONS.
13. METAL SURFACE PREPARATION - ALL METAL SURFACES TO BE PAINTED MUST BE CLEAN AND FREE OF RUST, MILL SCALE, GREASE, OIL, DIRT AND OTHER FOREIGN MATTER. ALL ALUMINUM MUST BE CLEANED WELL IN ORDER TO REMOVE ALL SURFACE FILM AND OILS, AND SHALL BE PROPERLY PRIMED IN ACCORDANCE WITH THE PAINT MANUFACTURER'S RECOMMENDATIONS.

MISCELLANEOUS

1. CONTRACTOR SHALL VERIFY ALL DIMENSIONS AND ELEVATIONS IN THE FIELD PRIOR TO COMMENCING WORK.
2. CONTRACTOR IS RESPONSIBLE FOR COORDINATION OF DIMENSIONS SHOWN ON THE DRAWINGS. NOTIFY THE VA/COR OF ANY DISCREPANCY BEFORE STARTING WORK.
3. A SUCCESSFUL REVIEW OF SHOP DRAWINGS AND SUBMITTALS BY THE ARCHITECT/ENGINEER DOES NOT RELIEVE CONTRACTOR OF THE RESPONSIBILITY TO REVIEW AND CHECK SHOP DRAWINGS BEFORE SUBMITTAL TO VA/COR. THE CONTRACTOR REMAINS SOLELY RESPONSIBLE FOR ERRORS AND OMISSIONS ASSOCIATED WITH THE PREPARATION OF SHOP DRAWINGS AS THEY PERTAIN TO DETAILS AND GIVEN DIMENSIONS IN THE CONTRACT DOCUMENTS.
4. CONTRACTOR SHALL OBTAIN VA/COR WRITTEN APPROVAL PRIOR TO PROCEEDING WITH ANY CHANGES FROM THE INFORMATION PROVIDED HEREIN.

FIRE AND SAFETY NOTES

1. MAINTAINING INTEGRITY OF FIRE AND SAFETY SYSTEMS IN PLACE IN MEDICAL CENTER AND OF ITS OUT BUILDINGS DURING CONSTRUCTION SHALL BE RESPONSIBILITY OF GENERAL CONTRACTOR.
2. IN ADDITION TO VA MEDICAL CENTER POLICIES, NATIONAL, STATE, AND LOCAL CODES AND ORDINANCES SHALL APPLY TO THEIR CONTRACTORS AND SUB-CONTRACTORS.
3. THE CONTRACTOR SHALL BE RESPONSIBLE FOR MEETING PERTINENT OSHA SAFETY REQUIREMENTS.
4. PROVIDE LOCKOUT-TAGOUT AND CONFINED SPACE ENTRY POLICIES AS APPLICABLE AND AS REQUIRED BY OSHA. THESE POLICIES SHALL BE SUBMITTED FOR PRIOR APPROVAL BY VA SAFETY OFFICER/MANAGER.
5. EXISTING FIRE PROTECTION SYSTEMS, INCLUDING FIRE ALARM SYSTEMS, SMOKE DETECTION SYSTEMS, AND SPRINKLER SYSTEMS SHALL NOT BE IMPAIRED DURING CONSTRUCTION. WHEN A CEILING SYSTEM IS SCHEDULED TO BE REMOVED THE EXISTING SPRINKLER HEAD IN THIS AREA SHALL BE TURNED UPRIGHT UNTIL THE FINISH CEILING IS BACK IN PLACE AND THEN THE SPRINKLER CAN BE TURNED BACK DOWN. SMOKE DETECTOR DISABLE REQUESTS: OUTAGE REQUESTS TO BE SUBMITTED TO VA COR FOR APPROVAL FOR SPECIFIC DATE AND TIME. ALARMS WILL ONLY BE TURNED OFF FOR SPECIFIC SHIFTS REQUESTED AND WHEN CONTRACTORS ARE IN CONSTRUCTION AREA. ALARMS WILL BE RESTORED AT END OF WORK DAY BY CALLING SAME EXTENSION. AT NO TIME WILL ALARMS REMAIN OFF OVERNIGHT. SMOKE DETECTORS AND OR SPRINKLER HEADS: DO NOT COVER BY BAGS, TAPE, AND PLASTIC OR IN ANY OTHER MANNER THAT WILL DEFEAT THEIR ABILITY TO SENSE SMOKE OR HEAT AND OPERATE AS DESIGNED.
6. DAILY ACCUMULATIONS OF TRASH, COMBUSTIBLE MATERIALS, PACKAGING, AND DEBRIS SHALL BE REMOVED FROM CONSTRUCTION AREA ON A DAILY BASIS. FLAMMABLE MATERIALS MAY BE STORED ON SITE IN AN APPROVED AND APPROPRIATELY MARKED FLAMMABLE MATERIALS CABINET.
7. ENTIRE CAMPUS ON THIS MEDICAL CENTER IS A SMOKE FREE ZONE. USE OF SMOKING MATERIALS IS PROHIBITED.

GENERAL SCOPE OF WORK (SOW) DESCRIPTION

GENERAL

1. THE PURPOSE OF THIS PROJECT IS TO RENOVATE BUILDING #05 FLOOR #04 TO PROVIDE ELECTRONIC HEALTH RECORD MODERNIZATION (EHRM) TRAINING AND ADMINISTRATIVE SUPPORT SPACES
2. THE SCOPE OF THIS PROJECT WILL INCLUDE RENOVATING APPROXIMATELY 8,400 SQUARE FEET OF EXISTING FLOOR SPACE (4TH FLOOR).
3. THE SCOPE OF THE PROJECT WILL INCLUDE SELECT DEMOLITION, RENOVATION, AND UPGRADE OF UTILITIES, SUPPORTING SERVICES, INFRASTRUCTURE, AND SPACES IMPACTED BY RENOVATION.

DESIGN CONDITIONS

1. REMOVING ALL EXISTING LAB SERVICES INCLUDING SPECIAL EXHAUST SYSTEMS, ELECTRICAL DISTRIBUTION SYSTEMS, LABORATORY GAS SYSTEMS.
2. PROVIDE NEW WALLS, FINISH FLOORING, AND FINISH CEILINGS.
3. PROVIDE NEW LIGHTING, POWER AND FIRE ALARM SYSTEMS.
4. PROVIDE NEW PLUMBING FIXTURES.
5. PROVIDING NEW HVAC UNIT AND SYSTEMS SPECIFICALLY FOR 4TH FLOOR.

CONSTRUCTION PERIOD STAGING OF WORK - GENERAL NOTES

NORMAL WORK SHIFT HOURS FOR THE VA MEDICAL CENTER IS 8:00 AM UNTIL 5:00 PM DAILY, MONDAY THROUGH FRIDAY.

1. CERTAIN WORK ITEMS AND CONSTRUCTION ACTIVITIES THAT CREATE NOISE, DUST, VIBRATIONS AND THAT WOULD CREATE DISTURBANCES TO THE MEDICAL CENTER AND/OR ANY OF THE ADJACENT OCCUPIED AREAS WILL NEED TO BE PERFORMED DURING PERIODS OF AFTER-HOURS/OFF-HOURS WORK. ITEMS THAT WILL REQUIRE AFTER HOURS ACTIVITIES SHALL BE FULLY COORDINATED WITH VA COR PRIOR TO START OF CONSTRUCTION.
2. AFTER-HOURS/OFF-HOURS OF OPERATION SHALL BE SCHEDULED FOR THE FOLLOWING DAYS AND TIMES AS COORDINATED, SCHEDULED AND AUTHORIZED BY THE COR: MONDAY THROUGH FRIDAY - 5:30 PM UNTIL 6:00 AM WEEKENDS (AS ALLOWED) - TIMES TO BE DETERMINED WITH THE COR.
3. THE FOLLOWING CONSTRUCTION ACTIVITIES SHALL BE CONSIDERED AFTER-HOURS/OFF-HOURS OPERATIONS
   - a. THE MOVING OF CONSTRUCTION MATERIALS, EQUIPMENT, TOOLS AND/OR DEMOLITION MATERIALS TO/FROM THE EXTERIOR TO INTERNAL AREAS OF WORK.
   - b. ALL WORK IN THE ADJACENT OCCUPIED SPACES TO THE CURRENT STAGE/AREA OF WORK.
   - c. ALL WORK THAT WILL REQUIRE SYSTEM SHUTDOWNS.
   - d. ALL CONCRETE OR METAL DECKING CORING, CUTTING OR DRILLING.
   - e. THE APPROVED USE OF POWER ACTUATED FASTENERS.
   - f. ALL WORK (DEMOLITION OR NEW) THAT WILL CAUSE IMPACT NOISE AND VIBRATIONS THAT CAN BE HEARD OR FELT IN THE SURROUNDING ADJACENT OCCUPIED SPACES/AREAS.
   - g. CONTRACTOR MUST PARK WITHIN APPROVED CONSTRUCTION AREA OR AT DESIGNATED AREAS AT FAR PORTIONS OF EXISTING CAMPUS PARKING LOTS. CAMPUS PARKING IS LIMITED AND PRIORITY IS GIVEN TO PATIENTS AND STAFF.
4. WEEKEND AND HOLIDAY HOURS SHALL BE FROM 8:00 A.M. TO 5:00 P.M. COORDINATE WITH VA COR PRIOR TO START OF CONSTRUCTION.

SPECIAL SAFETY NOTES

1. ALL CONTRACTORS, SUBCONTRACTORS AND THEIR REPRESENTATIVES WORKING ON THIS PROJECT SHALL AT ALL TIMES PRIOR TO AND DURING THE COURSE OF THEIR ACTIVITY BE RESPONSIBLE FOR THE SAFETY OF THEIR EMPLOYEES, ALL OTHERS AND ARE TO BE IN CARE OF THE PROPERTY.
2. EACH CONTRACTOR OR SUBCONTRACTOR, AS REPRESENTATIVES OF THEIR EMPLOYEES, SHALL ASCERTAIN THAT THE CONDITIONS UNDER WHICH THEY WILL BE REQUIRED TO ACCOMPLISH THEIR WORK ARE SAFE AND MEET ALL APPLICABLE REQUIREMENTS OF THE OCCUPATIONAL SAFETY AND HAZARD ACT, ALONG WITH ALL OTHER APPLICABLE GOVERNING REGULATIONS AND VA REQUIREMENTS.
3. THE BEGINNING OF WORK ON SITE BY A CONTRACTOR OR SUBCONTRACTOR SHALL INDICATE HIS/HER SATISFACTION AND FULL ACCEPTANCE OF THE CURRENT SITE CONDITIONS REGARDING SAFETY AND THE NECESSARY COMPLIANCE WITH ALL CONTRACT REQUIREMENTS REGARDING SAME. THE CONTRACTOR ACCEPTS FULL RESPONSIBILITY FOR ANY ACCIDENTS, INJURIES, AND/OR DAMAGES INCURRED AS A RESULT OF ANY VISIBLE OR KNOWN UNSAFE CONDITIONS THAT EXIST.
4. IF UNSATISFIED WITH THE CURRENT SITE SAFETY CONDITIONS AND/OR THE NECESSARY COMPLIANCE, THE CONTRACTOR OR SUBCONTRACTOR SHALL INDICATE THE ACTIONS AND/OR DEVICES NECESSARY TO RENDER THE JOB-SITE SAFE. IF THE WORK OF OTHER PARTIES, UPON INSPECTION, IS FOUND AT ANY TIME TO BE UNSAFE THE CONTRACTOR OR SUBCONTRACTOR SHALL IMMEDIATELY STOP ALL WORK AND NOTIFY THE GENERAL/PRIME CONTRACTOR AND THE VA/COR. THE SUBMISSION OF A BID FOR ANY PORTION OF WORK INCLUDED IN THIS CONTRACT SHALL ALSO INDICATE ACKNOWLEDGMENT AND ACCEPTANCE OF THESE REQUIREMENTS.

GENERAL CONSTRUCTION NOTES

1. THE CONTRACTOR WILL COORDINATE WITH THE VA/COR TO DEVELOP A CRITICAL PATH METHOD (CPM) SCHEDULE, CONSTRUCTION ACTIVITY SEQUENCING AND ASSOCIATED COMPLETION DATES FOR THE COMPLETE PROJECT.
2. THE VA MEDICAL CENTER MUST REMAIN IN FULL OPERATION DURING CONSTRUCTION ACTIVITIES WITH MINIMAL INTERRUPTION DUE TO ALL RELATED CONSTRUCTION ACTIVITIES AND RELATED COMPONENTS OF THE PROJECT, INCLUDING MATERIAL DELIVERIES, NOISE, DUST, VIBRATION, ETC., BY CONSTRUCTION ACTIVITIES RELATED TO THIS PROJECT.
3. THE CONTRACTORS SCHEDULES SHOULD INCLUDE BUT ARE NOT LIMITED TO THE FOLLOWING:
   - A. CONSTRUCTION ACTIVITIES WHICH MAY AFFECT THE CONTINUAL OPERATIONS OF THE VA MEDICAL CENTER.
   - B. SCHEDULES FOR EXISTING SYSTEMS SHUT DOWN.
   - C. SCHEDULES FOR CONSTRUCTION ACTIVITIES OCCURRING AFTER NORMAL BUSINESS HOURS.
4. PROVIDE TEMPORARY CONSTRUCTION FENCING/BARRIERS WITH DOORS AND FRAMES AS REQUIRED TO SEPARATE CONSTRUCTION ACTIVITIES FROM PUBLIC AREAS AND AREAS REQUIRING ACCESS DURING CONSTRUCTION.
5. IF THE VAMC ACCESS/EGRESS ROUTES ARE REQUIRED TO BE BLOCKED TEMPORARILY TO ACCOMMODATE CONSTRUCTION, COORDINATE ALTERNATE ACCESS/EGRESS ROUTES WITH THE VA/COR AND PROVIDE TEMPORARY SIGNAGE AND TEMPORARY PROTECTIVE BARRIERS TO CREATE ALTERNATIVE ACCESS/EGRESS ROUTES AS REQUIRED. COORDINATE AND SCHEDULE ANY DOWNTIME FOR THESE ROUTES WITH THE VA/COR.
6. THE CONTRACTOR SHALL REVIEW LOCATIONS OF TEMPORARY CONSTRUCTION BARRIERS AND INFECTION CONTROL BARRIERS, CONTRACTOR SITE ACCESS AND DEBRIS AND MATERIAL DELIVERY AND DELIVERY ROUTES WITH THE VA/COR.
7. MAINTAIN ACCESS TO EXISTING BUILDINGS WITHIN THE LIMITS OF CONSTRUCTION.
8. COORDINATE SHUT DOWNS OF UTILITIES OR ANY CONSTRUCTION ACTIVITIES WHICH MAY POTENTIALLY AFFECT THE EXISTING OPERATIONS OF THE VAMC WITH THE VA/COR. MAINTAIN UNINTERRUPTED OPERATION OF THE EXISTING FACILITIES FOR ALL EXISTING UTILITIES TIE-INS. SCHEDULE THESE EVENTS AFTER-NORMAL BUSINESS HOURS OR AS REVIEWED AND APPROVED BY THE VA/COR.
9. THE CONTRACTOR WILL REVIEW WITH THE VA/COR FOR THE LOCATION OF THE SAFETY SIGN AND CONSTRUCTION SIGN.
10. ALL PERSONNEL ENTERING RENOVATION AREAS WITHIN OCCUPIED FLOORS OF THE VA MEDICAL CENTER SHALL WEAR SHOE COVERS, AND THESE MUST BE CHANGED EACH TIME THE WORKER EXITS THE RESPECTIVE WORK AREA. PROVIDE ADHESIVE WALK-OFF MATS AT ENTRY POINTS AT ALL WORK AREAS. REPLACE WALK-OFF MATS DAILY OR WHEN THEY NO LONGER ARE ABLE TO CONTAIN DUST AND DIRT. WET MOP AND/OR VACUUM WORK AREA WITH HEPA FILTERED VACUUM BEFORE LEAVING WORK AREAS. CONTAIN CONSTRUCTION WASTE IN TIGHTLY COVERED CONTAINERS PRIOR TO TRANSPORTING. REMOVE BARRIER MATERIALS CAREFULLY TO MINIMIZE THE SPREADING OF DIRT AND DEBRIS ASSOCIATED WITH CONSTRUCTION. DO NOT REMOVE BARRIERS FROM WORK AREA UNTIL COMPLETED PROJECT IS THOROUGHLY CLEANED AND INSPECTED BY VA/COR.

100% CONSTRUCTION + BID DRAWING	10/06/2023
100% CONSTRUCTION + BID DRAWING	09/28/2023
95% CONSTRUCTION DOCUMENTS	09/01/2023
65% DESIGN DEVELOPMENT	7/27/2023
35% SCHEMATIC DESIGN	6/26/2023
Revisions:	Date:

CONSULTANT

ARCHITECT/ENGINEER OF RECORD

BANCROFT ARCHITECTS + ENGINEERS
3300 Dundee Rd.
Northbrook, IL 60062
T: 847.952.9362
www.bancroft-ae.com
VA CONTRACT NO. 36C77623C0052
Bancroft Project No. 22-131

STAMP

LICENSED ARCHITECT CROTAN D. ZAKARIJA 001.022.335 STATE OF ILLINOIS 10/06/23

Office of Construction and Facilities Management

VA U.S. Department of Veterans Affairs

Drawing Title: GENERAL - PROTECTION PROTOCOL, SCOPE OF WORK AND MISC. NOTES

Approved: Project Director

Phase: 100% CONSTRUCTION + BID DRAWINGS

Project Title: EHRM-TASS

Location: G.V. (Sonny) Montgomery VAMC

Issue Date: 10/06/2023 | Checked: MTB | Drawn: AM

Project Number: 586-22-703

Building Number: 5

Drawing Number: GI002

VA FORM 08-6231

GENERAL DEMOLITION NOTES FOR CONTRACTORS

GENERAL NOTES FOR CONTRACTORS: SEE ALL PROJECT GENERAL NOTES AND OTHER REQUIREMENTS INCLUDING THE LIFE SAFETY AND INFECTION CONTROL WORK LOCATED WITHIN THE GENERAL DRAWINGS SECTION. COMPLY WITH ALL REQUIREMENTS AS THEY ARE A DIRECT PART OF THIS SECTION AS IF THEY WERE DIRECTLY INCLUDED AND PROVIDED HEREIN.

PROTECTION PROTOCOLS: VERIFY AND COORDINATE ALL PROTECTION REQUIREMENTS TO BE PROVIDED FOR EACH SPECIFIC AREA OR LOCATION OF SCHEDULED WORK WITH THE VA/COR, BEFORE BEGINNING ANY WORK. WHEN PERFORMING DEMOLITION WORK IN ANY OCCUPIED SPACES FOLLOW THE "OCCUPIED AREAS PROTECTION PROTOCOLS " UNLESS MODIFIED IN WRITING BY THE VA/COR ON A CASE BY CASE BASIS.

1. BEFORE BEGINNING ANY DEMOLITION WORK EACH CONTRACTOR AND DISCIPLINE SHALL PERFORM A FULL EXAMINATION OF ALL AREAS OF WORK AND FULLY VERIFY ALL EXISTING CONDITIONS ALONG WITH ALL OF THE AREAS OF WORK FOR ANY UNFORESEEN CONDITIONS OR DISCREPANCIES FROM THE DOCUMENTATION THAT WOULD AFFECT THEIR WORK AND/OR THE WORK OF OTHERS. ANY UNFORESEEN CONDITIONS OR DISCREPANCIES DISCOVERED ARE TO BE IMMEDIATELY IDENTIFIED AND COORDINATED WITH THE GENERAL/PRIME CONTRACTOR WHO SHALL IN TURN DOCUMENT AND PROMPTLY REPORT ANY SUCH CONDITIONS DIRECTLY TO THE VA/COR FOR DIRECTION ON HOW TO PROCEED BEFORE ALLOWING ANY WORK TO BEGIN.

2. ALL REQUIRED DEMOLITION WORK IS NOT NECESSARY LIMITED TO WHAT IS ONLY SPECIFICALLY SHOWN OR DIRECTLY CALLED OUT ON THE DEMOLITION PLANS OR THAT IS ONLY SPECIFICALLY IDENTIFIED WITHIN THE DEMOLITION NOTES DESCRIPTIONS. THE INTENT OF THE DOCUMENTATION IS TO GENERALLY IDENTIFY THE MORE SPECIFIC MAJOR ELEMENTS OF WORK IN PLACE THAT SHALL REQUIRE REMOVAL AND/OR REWORK IN ORDER TO ACCOMPLISH THE DESIGN INTENT OF THE DOCUMENTS. THE FULL EXTENT OF DEMOLITION WORK COULD INCLUDE BUT NOT NECESSARILY BE LIMITED TO ALL AFFECTED LESSER ELEMENTS OF ARCHITECTURAL, STRUCTURAL, MECHANICAL, PLUMBING, MEDICAL GASES, FIRE PROTECTION SPRINKLER SYSTEMS AND ALL ELECTRICAL SYSTEMS WORK INCLUDING HIGH AND LOW VOLTAGE POWER, COMMUNICATION SYSTEMS SUCH AS CCTV, SECURITY, IT DATA, LIFE SAFETY, FIRE PROTECTION, NURSE CALL, PA, BAS CONTROLS SYSTEMS, TEMPERATURE AND OTHERWISE, ETC.

3. ALL REQUIRED DEMOLITION WORK IS NECESSARY TO FACILITATE THE EXTENT OF BOTH THE NEW CONSTRUCTION WORK AS WELL AS TO FACILITATE THE REPLACEMENT, RELOCATION AND/OR THE REWORKING OF THE EXISTING SYSTEMS. ANY REWORKING OF THE CURRENT ELEMENTS AND COMPONENTS CURRENTLY NEEDING TO BE MODIFIED IN ORDER TO PROPERLY SUPPORT THE COMPLETED PROJECT SHALL BE PROVIDED AS INTENDED TO CONFORM WITH THE ORIGINAL DESIGN INTENT WHETHER SPECIFICALLY CALLED FOR IN GREAT DETAIL WITH EVERY ANCILLARY ELEMENT FULLY NAMED AND IDENTIFIED OR AS CALLED OUT AS A GENERAL COMPONENT PORTION OF WORK THAT NEEDS TO BE PROPERLY REMOVED IN ORDER TO COMPLETE THE SCOPE OF WORK AS INTENDED TO COMPLY WITH ALL BASES OF DESIGN REQUIREMENTS.

4. THE CONTRACTOR SHALL BE RESPONSIBLE FOR THE COMPLETE DEMOLITION AND REMOVAL OF ALL EXISTING WALLS, CEILINGS, SUSPENSION SYSTEMS, FLOORING, ELECTRICAL, TELEPHONE AND PLUMBING CONSTRUCTION AS WELL AS ALL MATERIALS, FINISHES AND EQUIPMENT THAT IS NOT SPECIFICALLY SHOWN OR CALLED FOR AS REQUIRED TO FACILITATE THE NEW CONSTRUCTION WORK INSIDE THE CONTRACT AREA, THE ADJACENT SPACES AND THE SPACES ABOVE AND BELOW. SOME ADDITIONAL ITEMS THAT MAY NOT BE SPECIFICALLY SHOWN IN GREAT DETAIL ON THE DEMOLITION PLAN THAT ARE A PART OF THE DEMOLITION WORK, BUT NOT LIMITED TO, ARE CASEWORK, SHELVING, BRACKETS, STANDARDS, DOOR HARDWARE, MISCELLANEOUS OTHER HARDWARE, SIGNAGE, FLOORING MATERIALS, WALL BASE, WOOD GROUNDS, WALL COVERING MATERIALS, BACKING LINERS OR BOARDS, ANY REMAINING MASTIC, GROUT, CAULKING AND SEALANTS, EXPOSED ANCHORS AND FASTENERS, FRAMING MATERIALS, BACKER BOARDS OR METAL PLATES, CHAIR RAILS, BRACKETS, HOOKS, SURFACE MOUNTED OR RECESSED ACCESSORIES, PRIVACY CURTAINS AND TRACKS, ETC.

5. ALL DEMOLITION WORK SHALL BE PERFORMED IN A SYSTEMATICALLY SAFE FULLY SUPERVISED COORDINATED AND PROPERLY MANAGED SEQUENCE OF WORK UNDER THE DIRECT SUPERVISION OF THE GENERAL/PRIME CONTRACTOR'S SUPERINTENDENT AND/OR THEIR MANAGEMENT PERSONNEL INCLUDING THE PERFORMANCE OF ANY ANCILLARY ELEMENTS OF SELECTIVE DEMOLITION.

6. ALL DEMOLITION, THE HANDLING OF MATERIALS AND EQUIPMENT ALONG WITH THE MOVEMENT OF THESE ELEMENTS THROUGHOUT THE FACILITY SHALL BE PERFORMED SO AS TO PREVENT DAMAGE TO ADJACENT IMPROVEMENTS AND FACILITIES TO REMAIN AS WELL AS TO PROVIDE SAFETY FOR ALL TRADESPEOPLE, STAFF, RESIDENTS/PATIENTS, VISITORS AND SERVICE PROVIDERS.

7. PROVIDE ALL PHYSICAL AND ENVIRONMENTAL PROTECTIVE MEASURES AS REQUIRED BY THE PROJECT DOCUMENTS, VA FEDERAL AND LOCAL REQUIREMENTS, APPLICABLE OSHA REGULATIONS, THE STATION AND ALL LOCAL INFECTION CONTROL AUTHORITIES, NFPA REQUIREMENTS, THE VA/COR AND ALL OTHER REGULATORY AGENCIES AND VA AUTHORITIES HAVING JURISDICTION OVER THIS PROJECT.

8. PROVIDE ALL TEMPORARY PARTITIONS, PROTECTION, DOOR ACCESS UNITS, ENCLOSURES, WALKWAYS, FENCING, RAILINGS, CANOPIES, AIR FILTRATION DEVICES, VESTIBULES, AIRLOCKS, ETC., WHERE REQUIRED BY THE CONTRACT DOCUMENTS, THE VA/COR AND ALL AUTHORITIES HAVING JURISDICTION OVER THE PROJECT AND SHALL BE SURE TO MAINTAIN ADEQUATE AND SAFE EMERGENCY MEANS OF EGRESS FROM ALL AREAS. ALL SUCH WORK NEEDING TO BE PROVIDED WILL REQUIRE VA/COR REVIEW AND APPROVAL BEFORE BEGINNING ANY OF SUCH WORK.

9. GREAT CARE SHALL BE TAKEN WHEN PERFORMING SELECTIVE DEMOLITION IN THE UTILIZATION OF MORE SENSITIVE AND LESS EVASIVE METHODS OF DEMOLITION/REMOVAL, AS WELL AS PROVIDING THE APPROPRIATE ENHANCED PROTECTIVE BARRIERS IN ORDER TO PROVIDE FOR THE LEAST AMOUNT OF DAMAGE TO THE WORK THAT IS TO REMAIN IN PLACE. EXISTING FINISHED SURFACES, MATERIALS AND EXPOSED EQUIPMENT THAT WOULD RECEIVE SIGNIFICANT AMOUNTS OF SURFACE DAMAGE AND WOULD REQUIRE SIGNIFICANT AMOUNTS OF PATCHING, REPAIRS AND REFINISHING WORK SHALL BE DEEMED AS DAMAGED AND UNUSABLE AND WILL NEED TO BE REPLACED IN WHOLE BY THE RESPONSIBLE CONTRACTOR AND ITS REPLACEMENT ONCE COMPLETED WILL NEED TO RECEIVE VA/COR APPROVAL.

10. WHERE EXISTING FLOOR FINISHES ARE TO BE FULLY REMOVED TO ALLOW FOR THE INSTALLATION OF NEW, PROVIDE FOR THE COMPLETE REMOVAL OF THE EXISTING FLOOR FINISHES ALONG WITH ALL ASSOCIATED ATTACHMENT SYSTEMS SUCH AS MASTICS, ADHESIVES, TACKLES STRIPS, STAPLES, SETTING BEDS OF GROUT, MORTAR OR CONCRETE, CARPET PADDING, ATTACHED SUBFLOORING MATERIALS, ETC. AS REQUIRED TO GET DOWN TO THE EXISTING STRUCTURAL FLOOR SUBSTRATE THAT CAN BE PROPERLY PATCHED, REPAIRED, LEVELED AND MADE READY TO RECEIVE THE NEW FLOOR FINISHES.

11. ITEMS INDICATED TO BE REMOVED AND SALVAGED FOR THE VA SHALL REMAIN THE VA'S PROPERTY AND SHALL BE CAREFULLY REMOVED, CLEANED AND PROTECTED FROM DAMAGE BY THE CONTRACTOR RESPONSIBLE AT ALL TIMES. ALL SUCH ITEMS INDICATED TO BE SALVAGED WILL BE PACKAGED AND/OR CRATED AS REQUIRED BY THE VA/COR TO PROPERLY PROTECT THEM FROM DAMAGE CAUSED BY THE HANDLING, MOVING AND/OR THE STORAGE OF THESE ITEMS. ALL PACKAGES AND/OR CRATES OF ITEMS SHALL HAVE THEIR CONTENTS CLEARLY MARKED AND FULLY IDENTIFIED ON BOTH THE TOP AND ONE SIDE OF EACH CONTAINER TO BE COORDINATED WITH AND APPROVED BY THE VA/COR. DELIVER ALL SALVAGED MATERIALS TO THE LOCATIONS INDICATED IN THE PROJECT DOCUMENTATION OR TO THE GOVERNMENTS DESIGNATED STORAGE FACILITY ON THE STATIONS CAMPUS AS DIRECTED BY THE VA/COR.

12. UNLESS OTHERWISE INDICATED OR STATED TO BE SAVED, SALVAGED OR IDENTIFIED AS NEEDING TO REMAIN OR BE RELOCATED AND/OR REUSED, ALL ITEMS IDENTIFIED TO BE REMOVED, DEMOLISHED, SCRAPED, ETC. BECOMES THE PROPERTY AND RESPONSIBILITY OF THE CONTRACTOR AND AS SUCH IT IS THEIR RESPONSIBILITY TO REMOVE ALL SUCH ITEMS FROM THE SIT ON A DAILY BASIS UNLESS OTHERWISE APPROVED BY THE VA/COR.

13. DEMOLITION ITEMS OF VALUE TO THE CONTRACTOR(S) ARE NOT TO BE STORED ON SITE AND NEED TO BE REMOVED ON A DAILY BASIS UNLESS OTHERWISE APPROVED BY THE VA/COR.

14. ALL ITEMS OF WORK THAT ARE IDENTIFIED AS EXISTING TO BE REMOVED AND REUSED/REINSTALLED SHALL BE CAREFULLY DISCONNECTED, DETACHED, REMOVED AND DISASSEMBLED AS REQUIRED FOR CONVENIENCE AND EASE OF HANDLING, MOVING, STORAGE AND FOR THEIR PROTECTION FROM DAMAGE. ALL SUCH ITEMS ARE TO BE INDIVIDUALLY WRAPPED, BOXED OR PLACED IN CARTONS FOR THE EASE OF HANDLING THE MATERIALS AND THEIR PLACEMENT IN A VA/COR IDENTIFIED PROTECTED STORAGE AREA (TBD) LOCATED ON THE STATION BUT NOT NECESSARILY CONVENIENT TO THE SITE OF THE WORK. EACH ITEM SHALL BE FULLY CLEANED, FREE FROM DAMAGE, PREPARED FOR SERVICE AND FULLY TESTED TO VERIFY ITS ABILITY FOR PROPER FUNCTIONAL REUSE PRIOR TO BEING PLACED IN STORAGE. THE CONTRACTOR TAKES RESPONSIBILITY FOR AND CERTIFIES ITS PERFORMANCE CAPABILITIES AND THE FACT THAT IT IS NOT DAMAGED AND FULLY CAPABLE FOR REUSE WHEN READY FOR ITS REINSTALLATION. IN THE EVENTUALITY THAT AN ITEM IS ULTIMATELY FOUND TO BE DAMAGED OR INOPERABLE AT THE POINT OF REINSTALLATION THE CONTRACTOR SHALL BE RESPONSIBLE FOR PROVIDING A NEW ITEM/DEVICE ALONG WITH ALL ANCILLARY SUPPORT WORK AND EQUIPMENT NECESSARY TO FULLY REPLACE THE EXISTING.

15. WHERE EXISTING MATERIALS, ITEMS OR EQUIPMENT ARE TO BE REMOVED FOR THEIR REPLACEMENT IN THE SAME LOCATION BY THE SAME OR SIMILAR NEW MATERIALS, ITEMS OR EQUIPMENT, CAREFULLY DISCONNECT, DETACH, DISASSEMBLE IF REQUIRED, REMOVE AND DISPOSE OF THE ITEMS INDICATED ALONG WITH ANY AND ALL ANCILLARY SYSTEM COMPONENTRY OR SUPPORT ITEMS ADDITIONALLY IDENTIFIED OR REQUIRED TO BE REPLACED.

16. WHERE STRUCTURAL SUPPORT OF EXISTING CONSTRUCTION ELEMENTS OR PORTIONS OF STRUCTURAL ELEMENTS TO REMAIN IS REQUIRED THE RESPONSIBLE CONTRACTOR PERFORMING THE WORK SHALL PROVIDE AND MAINTAINING ALL NECESSARY STRUCTURAL SUPPORTS, SHORING, STIFFENERS, BRACING, BEAMS, COLUMNS, FOOTINGS AND SUPPORTS AS NECESSARY TO ENSURE THE STABILITY OF THE ELEMENTS BEING SUPPORTED AND TO ADEQUATELY DISTRIBUTE ANY TEMPORARY LOADING SO AS NOT TO OVER LOAD ANY OF THE EXISTING STRUCTURE AND THE CONSTRUCTION BELOW. THIS CONTRACTOR SHALL BE RESPONSIBLE FOR PROVIDING ALL STRUCTURAL ENGINEERING ANALYSIS, CALCULATIONS AND SOLUTIONS FOR PROVIDING ANY SUCH WORK AND WILL NEED TO PROVIDE ALL SUCH PROPER DOCUMENTATION PREPARED BY A LICENSED STRUCTURAL ENGINEER TO THE VA/COR AS A SHOP DRAWING SUBMITTAL FOR PROPER REVIEW AND APPROVAL BEFORE BEING ALLOWED TO BEGIN ANY SUCH WORK.

17. ALL EXISTING CONSTRUCTION OR ITEMS INDICATED TO REMAIN IN PLACE AND OPERATION SHALL BE PROTECTED FROM DAMAGE BOTH DURING THE DEMOLITION OPERATIONS AS WELL AS THE NEW CONSTRUCTION EFFORTS. WHERE PRACTICABLE, AND WITH THE VA/COR'S APPROVAL, THE CONTRACTOR MAY ELECT TO REMOVE SUCH ITEMS TO A SUITABLE STORAGE LOCATION DURING THE DEMOLITION PHASE AND THEN PROPERLY CLEAN AND REINSTALL THE ITEMS WHEN APPLICABLE. IN NO CASE SHALL ANY LIFE SAFETY DEVICES, SYSTEMS OR MEASURES BE COMPROMISED BY THE TEMPORARY REMOVAL OF ANY NECESSARY ELEMENTS OF WORK, FOR THE CONVENIENCE OF THE CONTRACTOR, THAT WERE NOT PROPERLY REPLACED IN KIND WITH A SIMILAR PROPERLY OPERATING TEMPORARY DEVICE.

18. DURING THE COURSE OF SELECTIVE DEMOLITION OR REMOVAL OPERATIONS AND THE EXISTING SUBSTRATE MATERIALS/CONSTRUCTION IS DAMAGED BEYOND REASONABLE REPAIR, THE CONTRACTOR SHALL BE RESPONSIBLE TO FULLY REPLACE THE ENTIRE DAMAGED SECTION AND/OR SECTIONS. THIS DAMAGED AREA SHALL BE REMOVED AND REPLACED AS REQUIRED TO REPAIR THE SUBSTRATE TO A LIKE NEW CONDITION THAT CONTAINS NO IRREGULAR JOINT CONNECTIONS, CONDITIONS, DEFECTS, WEAKNESS OR WILL CAUSE ADVERSE EFFECTS THAT WILL RESULT IN ANY DIFFERENTIAL FINISHED SURFACE CONDITIONS OR AREAS OF JOINT WEAKNESS THAT WILL RESULT IN SURFACE CRACKING AND BE APPARENT THAT THE CONDITION IS IN FACT A PATCH/REPAIR.

19. REFER TO ALL ENGINEERING DISCIPLINE DRAWINGS AND DOCUMENTATION FOR THE BASIC EXTENT BEING REQUIRED FOR ALL INFRASTRUCTURE AND SYSTEMS DEMOLITION AS WELL AS FOR IDENTIFYING ALL EXISTING EQUIPMENT, PIPING, CONDUITS, DUCTWORK, WIRING, CONTROLS, ETC. THAT ARE INTENDED TO REMAIN WITHIN ANY OF THE AREAS OF DEMOLITION, THE AREAS OF REWORKING OF EXISTING SYSTEMS AND THE AREAS OF NEW WORK.

20. UNLESS OTHERWISE NOTED ALL EXISTING PARTITION CONSTRUCTION WITHIN THE PROJECT AREA OF WORK SCHEDULED TO RECEIVE NEW FINISHES SHALL HAVE ALL EXISTING FINISHES REMOVED INCLUDING BUT NOT LIMITED TO ALL CERAMIC TILE, VINYL WALL COVERING, WOOD PANELING, WAINSCOT MATERIALS, GROUT, MASTIC, WALL COVERING BACKING, WALL BASE, ADHESIVE, STAPLES, EXPOSED FASTENERS, ETC. SUCH THAT THE SUB-STRAIGHT WALL/PARTITION SURFACES REQUIRE NO FURTHER DEMOLITION AND ARE PREPARED TO RECEIVE ALL REQUIRED PATCHING, REPAIRS, RESURFACING AND REFINISHING AS REQUIRED TO RECEIVE THE NEW FINISHES.

21. ALL FINISHED AREAS ADJACENT TO OR INCLUDED WITHIN THE AREA(S) OF CONSTRUCTION ALONG WITH ALL PUBLIC PROJECT ACCESS ROUTES SHALL BE PROTECTED FROM DUST AND DIRT THROUGH THE USE OF VA/COR APPROVED DUSTPROOF PROTECTION. SEE THE OCCUPIED AREA PROTECTION PROTOCOLS PROVIDED IN THE "GENERAL" DRAWINGS SECTION AND COORDINATE ALL SITE SPECIFIC CONDITIONS IMPACTS ENCOUNTERED WITH THE VA/COR.

22. ALL NEW WORK ALONG WITH ANY PORTIONS OF EXISTING EQUIPMENT, MATERIALS OR REWORKED ELEMENTS WHEN COMPLETED SHALL FULLY COMPLY WITH ALL BASES OF DESIGN REQUIREMENTS.

23. IT SHALL BE THE RESPONSIBILITY OF EACH CONTRACTOR TO ADEQUATELY PROTECT EXISTING CONSTRUCTION AND FINISHES TO REMAIN IN PLACE DURING BOTH THE DEMOLITION AND CONSTRUCTION SEQUENCES OF WORK. ANY DAMAGE TO SUCH AREAS SHALL BE RESTORED AND REFINISHED TO A "LIKE-NEW" CONDITION PRIOR TO THE VA/COR'S ACCEPTANCE OF THAT WORK.

24. THE GENERAL/PRIME CONTRACTOR IS RESPONSIBLE FOR THE PATCH, REPAIR, REFINISHING AND/OR REPLACEMENT OF ALL CONSTRUCTION, MATERIALS, ASSEMBLIES, EQUIPMENT, SIGNAGE AND FINISHES DAMAGED BY THE PROJECT DEMOLITION, TEMPORARY CONSTRUCTION, NEW CONSTRUCTION OR THE MOVEMENT OF PERSONNEL, TOOLS, EQUIPMENT, MATERIALS, ETC. BOTH INSIDE AND OUTSIDE OF THE DESIGNATED AREAS OF WORK.

25. PROVIDE THE CUTTING AND PATCHING FOR ALL DEMOLITION WORK AND ALL NEW CONSTRUCTION WORK BEING PERFORMED OUTSIDE OF THE PROJECT LIMIT LINES AS REQUIRED TO PROPERLY COMPLETE THE PROJECT SCOPE OF WORK.

26. ALL CUTTING, CORING AND DRILLING OF EXISTING CONCRETE AND MASONRY CONSTRUCTION SHALL NOT DAMAGE EXISTING REINFORCING STEEL, PIPING, CONDUITS OR OTHER CONCEALED CONSTRUCTION WITHIN. PRIOR TO CORING, DRILLING, CUTTING OR PERFORMING ANY BREAKING EFFORTS, PROVIDE PENETRATING FIELD X-RAYING OF THE INTENDED AREAS AND DOCUMENT THE EXACT SIZE AND LOCATIONS OF ALL SUCH INTERFERENCES. COORDINATE WITH AND OBTAIN VA/COR APPROVAL BEFORE PROCEEDING WITH ANY SUCH REQUIRED PENETRATIONS WORK.

27. THE GENERAL/PRIME CONTRACTOR IS RESPONSIBLE TO PROVIDE THE REMOVAL OF ALL CONSTRUCTION DEMOLITION DEBRIS, SPOIL AND MATERIALS FROM THE PROJECT SITE ON A DAILY BASIS UNLESS SPECIFICALLY REFERENCED OTHERWISE IN THE PROJECT SPECIFIC LOGISTICAL SEQUENCING REQUIREMENTS OR AS APPROVED BY THE VA/COR.

100% CONSTRUCTION + BID DRAWING	**10/06/2023**
100% CONSTRUCTION + BID DRAWING	**09/28/2023**
95% CONSTRUCTION DOCUMENTS	**09/01/2023**
65% DESIGN DEVELOPMENT	**7/27/2023**
35% SCHEMATIC DESIGN	**6/26/2023**
Revisions:	**Date:**

CONSULTANT

ARCHITECT/ENGINEER OF RECORD

BANCROFT ARCHITECTS + ENGINEERS
3300 Dundee Rd.
Northbrook, IL 60062
T: 847.952.9362
www.bancroft-ae.com
VA CONTRACT NO. 36C77623C0052
Bancroft Project No. 22-131

STAMP

LICENSED ARCHITECT
CROTAN D. ZAKARIJA
001.022.335
STATE OF ILLINOIS
10/10/23

Office of Construction and Facilities Management

VA U.S. Department of Veterans Affairs

Drawing Title: GENERAL - DEMOLITION NOTES	Phase: 100% CONSTRUCTION + BID DRAWINGS	Project Title: EHRM-TASS	Project Number: 586-22-703
			Building Number: 5
Approved: Project Director		Location: G.V. (Sonny) Montgomery VAMC	Drawing Number: GI003
		Issue Date: 10/06/2023 · Checked: MTB · Drawn: AM	

VA FORM 08-6231

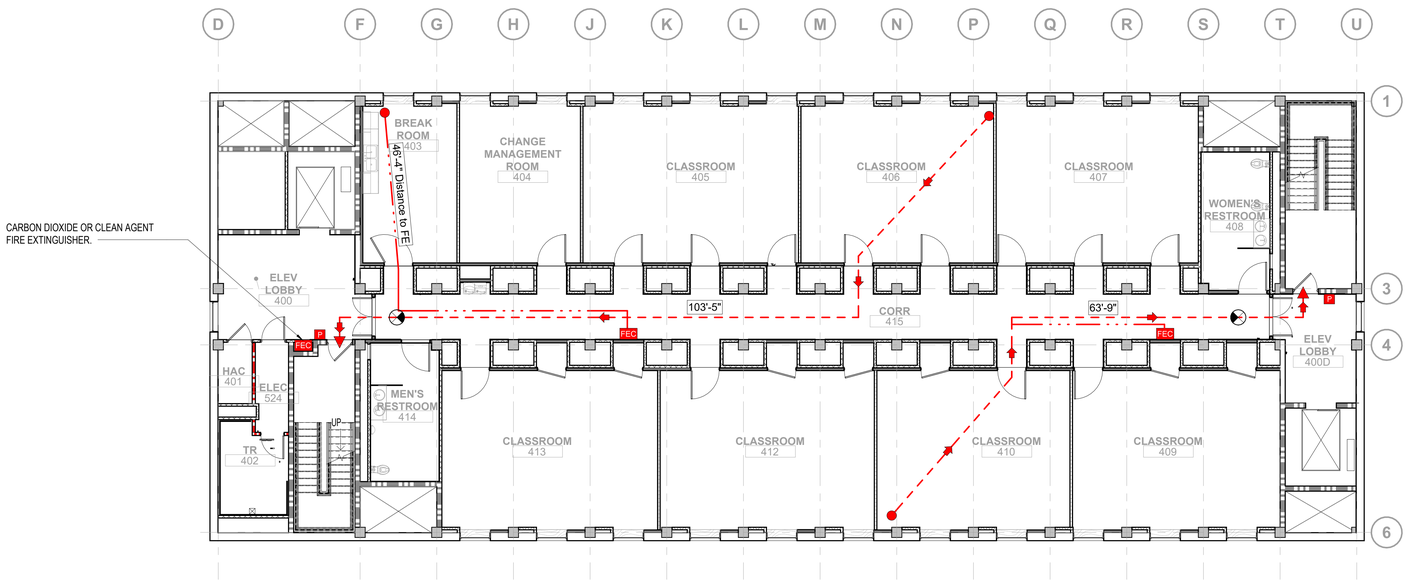

N

1 **LIFE SAFETY PLAN - 4TH FLOOR**

1/8" = 1'-0"

0 4' 8' 16'

SHEET NOTES

A. FOR BUILDING AND CODE INFORMATION SEE SHEET G0002.
B. FOR GENERAL PROJECT NOTES SEE SHEET GI002.

LIFE SAFETY PLAN LEGEND

- 2 HOUR FIRE -RATED BARRIER EXISTING TO REMAIN
- SMOKE RESISTANT PARTITION EXISTING TO REMAIN
- STARTING POINT
- MAXIMUM EGRESS TRAVEL DISTANCE
- DISTANCE — MAXIMUM COMMON PATH OF EGRESS TRAVEL
- FEC — FIRE EXTINGUISHER CABINET
- P — FIRE ALARM PULL STATION (SEE MEP & FP DWG'S FOR LOCATIONS)
- EXIT SIGN (SEE MEP & FP DWG'S FOR EXIT LOCATIONS)
- ROOM AREA / USE GROUP / LOAD FACTOR/ OCCUPANT LOAD — XXX SF / X / XXX | XX — OCCUPANCY LOAD TAG
- HAZARDOUS

100% CONSTRUCTION + BID DRAWING	10/06/2023
100% CONSTRUCTION + BID DRAWING	09/28/2023
95% CONSTRUCTION DOCUMENTS	09/01/2023
65% DESIGN DEVELOPMENT	7/27/2023
35% SCHEMATIC DESIGN	6/26/2023
Revisions:	Date:

CONSULTANT

ARCHITECT/ENGINEER OF RECORD

BANCROFT ARCHITECTS + ENGINEERS
3300 Dundee Rd.
Northbrook, IL 60062
T: 847.932.9362
www. bancroft-ae.com
VA CONTRACT NO. 36C77623C0052
Bancroft Project No. 22-131

STAMP

LICENSED ARCHITECT CROTAN D. ZAKARIJA 001.022.2367 STATE OF ILLINOIS
10/6/23

Office of Construction and Facilities Management

VA U.S. Department of Veterans Affairs

Drawing Title: GENERAL - LIFE SAFETY PLAN - 4TH FLOOR

Phase: 100% CONSTRUCTION + BID DRAWINGS

Project Title: EHRM-TASS

Project Number: 586-22-703

Building Number: 5

Approved: Project Director

Location: G.V. (Sonny) Montgomery VAMC

Issue Date: 10/06/2023

Checked: MTB

Drawn: AM

Drawing Number: GI104

VA FORM 08-6231

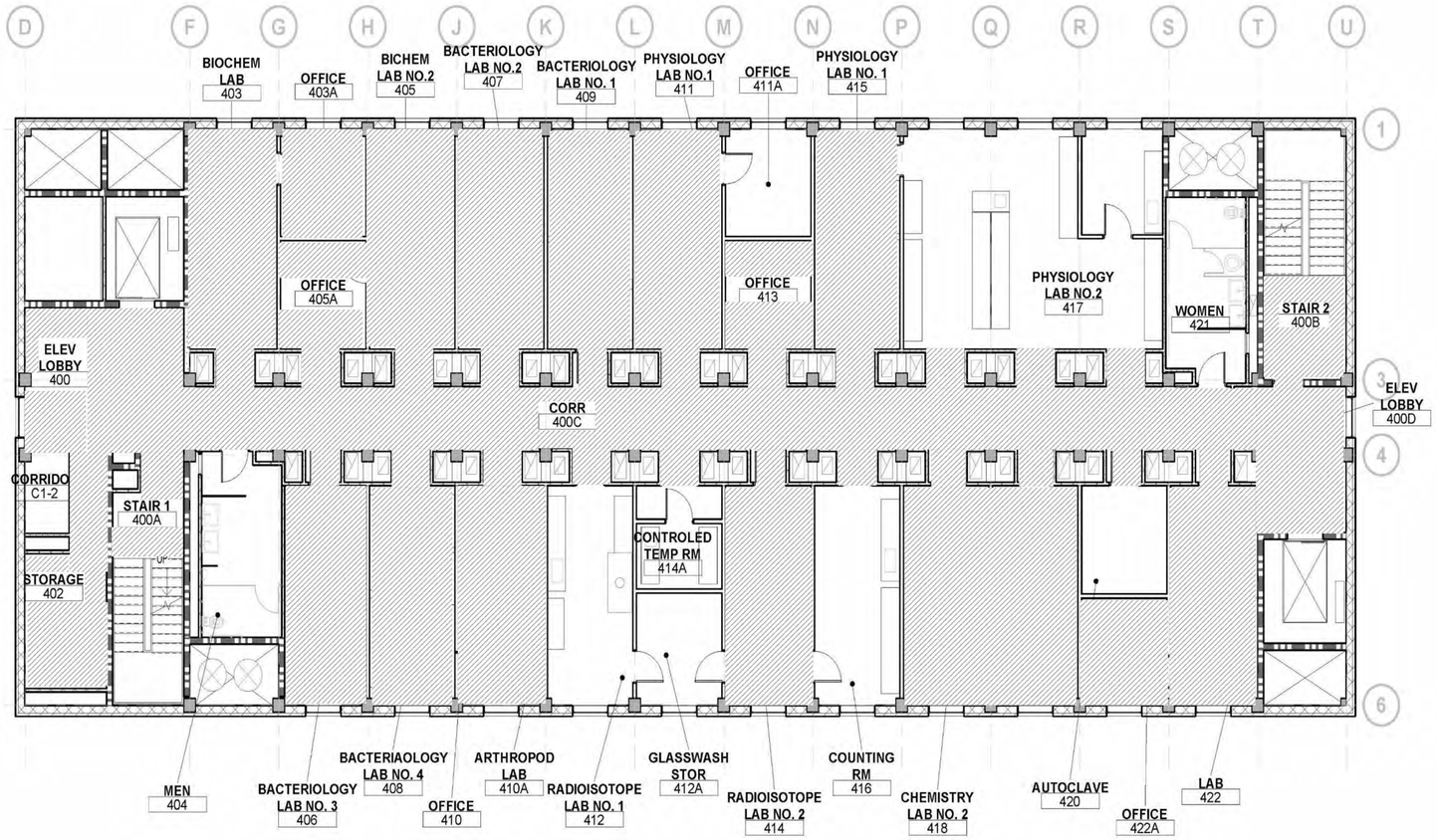

N

ASBESTOS FLOOR TILE AND MASTIC ABATEMENT – FLOOR #04 – BUILDING #05 RESEARCH AND EDUCATION BUILDING

ACM MATERIAL	QUANTITY	LOCATION
BLACK MASTIC UNDERNEATH WHITE FLOOR TILE	192 SQ. FT.	FOYER 1
	315 SQ. FT.	FOYER 2
	210 SQ. FT.	R-422
	100 SQ. FT.	422A
	1,268 SQ. FT.	HALLWAY
	440 SQ. FT.	R-418A/ 418B
	210 SQ. FT.	R-415
	110 SQ. FT.	R-413
	80 SQ. FT.	R-414
	210 SQ. FT.	R-411
	210 SQ. FT	R-409
	210 SQ. FT.	R-410/ 410A
	210 SQ. FT.	R-407
	210 SQ. FT.	R-408
	200 SQ. FT.	R-405/ 405A
	210 SQ. FT.	R-406
	310 SQ. FT.	R-403/ 403A
	210 SQ. FT.	STORAGE
	108 SQ. FT.	FOYER 1 STAIRWELL
	108 SQ. FT.	FOYER 2 STAIRWELL
WHITE FLOOR TILE	8 SQ. FT.	HALLWAY

LEGEND:

WHITE FLOOR TILE
BLACK MASTIC AND ASSOCIATED WHITE FLOOR TILE

DRAWING TITLE:
ASBESTOS FLOOR TILE AND MASTIC ABATEMENT

LOCATION:
BUILDING #05 – FLOOR #04
RESEARCH AND EDUCATION BUILDING
G.V. (Sonny) Montgomery VA Medical Center
1500 E. Woodrow Wilson Avenue
Jackson, MS 39216

DESIGNED:	BUILDING NUMBER:	FLOOR NUMBER:	BANCROFT-AE PROJECT NUMBER:
KK	5	4	22-131
CHECKED BY: DGK	NOT TO SCALE	**DATE:** 08/09/2023	**DRAWING NUMBER:** ASB01

ACM NOTES

1. ASBESTOS-CONTAINING BLACK MASTIC UNDERNEATH NON-ASBESTOS CONTAINING WHITE FLOOR TILE AND ASBESTOS-CONTAINING WHITE FLOOR TILE. THE CONTRACTOR SHALL REMOVE AND DISPOSE OF ASBESTOS-CONTAINING BLACK MASTIC AND ASSOCIATED WHITE FLOOR TILE AND ASBESTOS-CONTAINING WHITE FLOOR TILE FROM WORK AREAS THAT WILL BE IMPACTED BY THE RENOVATIONS WHERE INDICATED ON THE DRAWINGS.

THE CONTRACTOR SHALL REMOVE AND DISPOSE OF ALL NON-ASBESTOS CONTAINING MATERIALS, CREATED FROM WITHIN THE DESIGNATED ASBESTOS WORK AREAS TO ACCESS THE ASBESTOS-CONTAINING BLACK MASTIC, ASSOCIATED WHITE FLOOR TILE AND ASBESTOS CONTAINING WHITE FLOOR TILE . THE CONTRACTOR SHALL USE WET METHODS AND HEPA FILTERED VACCUM CLEANERS TO CONTROL THE RELEASE OF DUST WHEN PERFORMING THE REMOVAL OF ALL ASBESTOS AND ALL NON-ASBESTOS MATERIALS FROM THE WORK AREA.

ALL ASBESTOS REMOVAL WORK SHALL BE CONDUCTED WITHIN NEGATIVE PRESSURE CONTAINMENTS. A NEGATIVE AIR PRESSURE OF AT LEAST -0.02 INCHES OF WATER COLUMN, AS MEASURED AT ANY WORK AREA PERIMETER LOCATION, SHALL BE PROVIDED AT ALL TIMES DURING ASBESTOS REMOVAL. NEGATIVE AIR PRESSURE SHALL BE CREATED IN THE WORK AREA USING HEPA FILTERED AIR HANDLERS EXHAUSTED TO THE EXTERIOR OF THE BUILDING. THESE HEPA FILTERED EXHAUST UNITS WILL BE USED TO GENERATE AT LEAST FOUR (4) AIR CHANGES PER HOUR INSIDE THE WORK AREA. NEGATIVE AIR PRESSURE IN THE WORK ARA SHALL BE CONTINUOUSLY MONITORED BY THE CONTRACTOR THROUGH THE USE OD DIGITAL MANOMETERS POSTED OUTSIDE THE WORK AREA. AT A MINIMUM, A DIGITAL MANOMETER SHALL BE USED CONTINUALLY TO MONITOR THE WORK AREA'S NEGATIVE AIR PRESSURE.

THE CONTRACTOR SHALL SEAL AND PROTECT ALL WORK SURFACES WITH 2 LAYERS OF POLYETHYLENE SHEETING AS REQUIRED BY SECTION 3.1 AND 3.2 OF THE SPECIFICATIONS.

2. BLACK MASTIC AND WHITE FLOOR TILE REMOVAL METHOD – THE CONTRACTOR SHALL REMOVE THE ASBESTOS-CONTAINING MATERIALS PRESENT IN THE WORK AREA USING MANUAL WET METHODS.

A. ADEQUATE NEGATIVE AIR PRESSURE IN THE WORK AREA SHALL BE MAINTAINED AT ALL TIMES DURING REMOVAL. IF AT ANY TIME THE NEGATIVE AIR PRESSURE WITHIN THE WORK AREA FALLS BELOW -0.02 INCHES OF WATER COLUMN, THE CONTRACTOR SHALL STOP WORK AND MAKE THE NECESSARY REPAIRS TO RE-ESTABLISH THE APPROPRIATE NEGATIVE AIR PRESSURE IN THE WORK AREA.

B. THE ACCUMULATED ASBESTOS CONTAINING WHITE FLOOR TILE, AND BLACK MASTIC WITH ASSOCIATED WHITE FLOOR TILE SHALL BE DISPOSED OF AS NON-FRIABLE ASBESTOS WASTE.

3. PERSONAL/WASTE DECONTAMINATION ENCLOSURE LOCATION – THE CONTRACTOR SHALL CONSTRUCT AND DESIGN SEPARATE PERSONNEL AND WASTE DECONTAMINATION CHAMBERS IN ACCORDANCE WITH SECTION 1.9. PLACEMENT OF THE DECONTAMINATION CHAMBERS WITHIN THE WORK AREA IS REQUIRED.

4. SPRINKLER HEADS AND SMOKE DETECTORS – THE CONTRACTOR SHALL ARRANGE TO HAVE ANY SMOKE DETECOTORS IN THE WORK AREA ISOLATED FROM THE MAIN FIRE SYSTEM AND SHALL COVER THE SMOKE DETECTORS WITH PLASTIC SHEETING TO PROTECT THEM FROM DUST AND WATER CONTAMINATION.

5. TEMPORARY GFCI POWER – ALL POWER USED TO OPERATE CONTRACTOR EQUIPMENT AND LIGHTS WITHIN THE REGULATED WORK AREAS HSALL BE CONNECTED TO A GFCI POWER PANEL. THE CONTRACTOR SHALL PROVIDE AND INSTALL THE GFCI PANEL. GFCI PANELS SHALL BE INSTALLED AND CONNECTED TO A POWER DISTRIBUTION PANELS LOCATED ON THE FLOOR WHERE WORK IS TO BE CONDUCTED. THE CONTRACTOR SHALL RETAIN A LICENSED ELECTRICIAN TO CONNECT THE TEMPORARY GFCI POWER PANEL. THE CONNECTION OF THE TEMPORARY PANEL SHALL BE COORDINATED WITH THE DESIGNATED VA REPRESENTATIVE.

6. IN CONTAINMENT WORK AREAS, THE CONTRACTOR SHALL MAINTAIN NEGATIVE PRESSURE AND RECORD THE PRESSURE, USING A RECORDABLE MANOMETER, 24 HOURS PER DAY, 7 DAYS PER WEEK, UNTIL FINAL CLEARANCE OF EACH WORK AREA IS ACHIEVED, AND THE FINAL INSPECTION BY THE HINDS COUNTY HEALTH DEPARTMENT HAS BEEN COMPLETED AND RE-OCCUPANCY HAS BEEN APPROVED.

7. THE WORK COVERED INCLUDES THE HANDLING AND CONTROL OF ASBESTOS CONTAINING MATERIALS TO PROTECT WORKERS, THE ENVIRONMENT AND AREA, OR BOTH, FROM CONTACT WITH AIRBORNE ASBESTOS FIBERS. THE WORK ALSO INCLUDES THE DISPOSAL OF ANY ASBESTOS CONTAINING OR CONTAMINATED MATERIALS GENERATED BY THE WORK. THE INTENT OF THE ABATEMENT WORK IS TO REMOVE SPECIFIED ACM AND MAKE THE WORK AREA ENVIRONMENTALLY SAFE FOR THE RENOVATION PROJECT TO PROCEED IN THE WORK AREA.

8. THE CONTRACTOR SHALL REFERENCE APPLICABLE DUST CONTROL DRAWINGS AND PLANS AND THE ICRA PLAN FOR WORK AREA SETUP AND PROJECT PHASING.

9. ALL ASBESTOS ABATEMENT WORK TO BE IN COMPLIANCE WITH OSHA, EPA, PADEP, AND HINDS COUNTY HEALTH DEPARTMENT ARTICLE XXI REGULATIONS.

Advanced Environmental CONSULTANTS

100% CONSTRUCTION + BID DRAWING	10/06/2023
100% CONSTRUCTION + BID DRAWING	09/28/2023
95% CONSTRUCTION DOCUMENTS	09/01/2023
Revisions:	Date:

CONSULTANT

Advanced Environmental CONSULTANTS

ARCHITECT/ENGINEER OF RECORD

BANCROFT ARCHITECTS + ENGINEERS
3300 Dundee Rd.
Northbrook, IL 60062
T: 847.952.9362
www. bancroft-ae.com
VA CONTRACT NO. 36C77623C0052
Bancroft Project No. 22-131

STAMP

LICENSED ARCHITECT CROTAN D. ZAKARIJA 001-022-335 STATE OF ILLINOIS

Office of Construction and Facilities Management

VA U.S. Department of Veterans Affairs

Drawing Title: ASBESTOS FLOOR TILE AND MASTIC ABATEMENT	Phase: 100% CONSTRUCTION + BID DRAWINGS	Project Title: EHRM-TASS	Project Number: 586-22-703
Approved: Project Director			Building Number: 5
		Location: G.V. (Sonny) Montgomery VAMC	Drawing Number: H-104
		Issue Date: 10/06/2023 · Checked: DGK · Drawn: KK	

VA FORM 08-6231

GRAPHIC SYMBOLS

- KEYNOTE TAG DEMOLITION
- XX — KEYNOTE TAG
- XX — PARTITION TYPE
- XXX — DOOR NUMBER
- XX — WINDOW NUMBER
- XXX — EQUIPMENT NUMBER
- N — NORTH ARROW
- 1 **View Name** — 1/8" = 1'-0" DRAWING TITLE AND SCALE
- REVISION NUMBER — REVISION NUMBER
- X / XXXX — INTERIOR ELEVATION (SINGLE) — ELEVATION NUMBER AND SHEET WHERE DRAWN
- X / XXXX / X — INTERIOR ELEVATION (MULTIPLE) — SHEET WHERE DRAWN; ELEVATION NUMBER AND DIRECTION OF VIEW
- X / XXXX — BUILDING & WALL SECTION — SECTION NUMBER; SHEET WHERE DRAWN
- X / XXXX — EXTERIOR ELEVATION — ELEVATION NUMBER; SHEET WHERE DRAWN
- X / XXXX — SECTION DETAIL — DETAIL NUMBER; SHEET WHERE DRAWN
- X / XXXX — DETAIL BUBBLE — DETAIL NUMBER; SHEET WHERE DRAWN
- Room name / XXX — ROOM TAG — ROOM NAME; ROOM NUMBER
- ELEVATION 0'-0" — ELEVATION TAG — HEIGHT ABOVE PROJECT DATUM; NAME OF LEVEL

NOTE:
SEE CORRESPONDING NUMBERED LIST ON
SHEET WHERE TAG OCCURS U.N.O.

MATERIAL INDICATIONS

- EARTH
- GRAVEL
- CONCRETE
- CONCRETE MASONRY UNIT
- BRICK MASONRY
- STEEL/STAINLESS STEEL
- ALUMINUM
- WOOD BLOCKING / FRAMING
- PLYWOOD
- HARDWOOD
- RIGID INSULATION
- BATT INSULATION
- MORTAR/SAND/STUCCO/GYPSUM BOARD SURFACE
- ACOUSTIC CEILING
- CERAMIC TILE
- SHIM OR NAILER

TYPICAL MOUNTING HEIGHTS

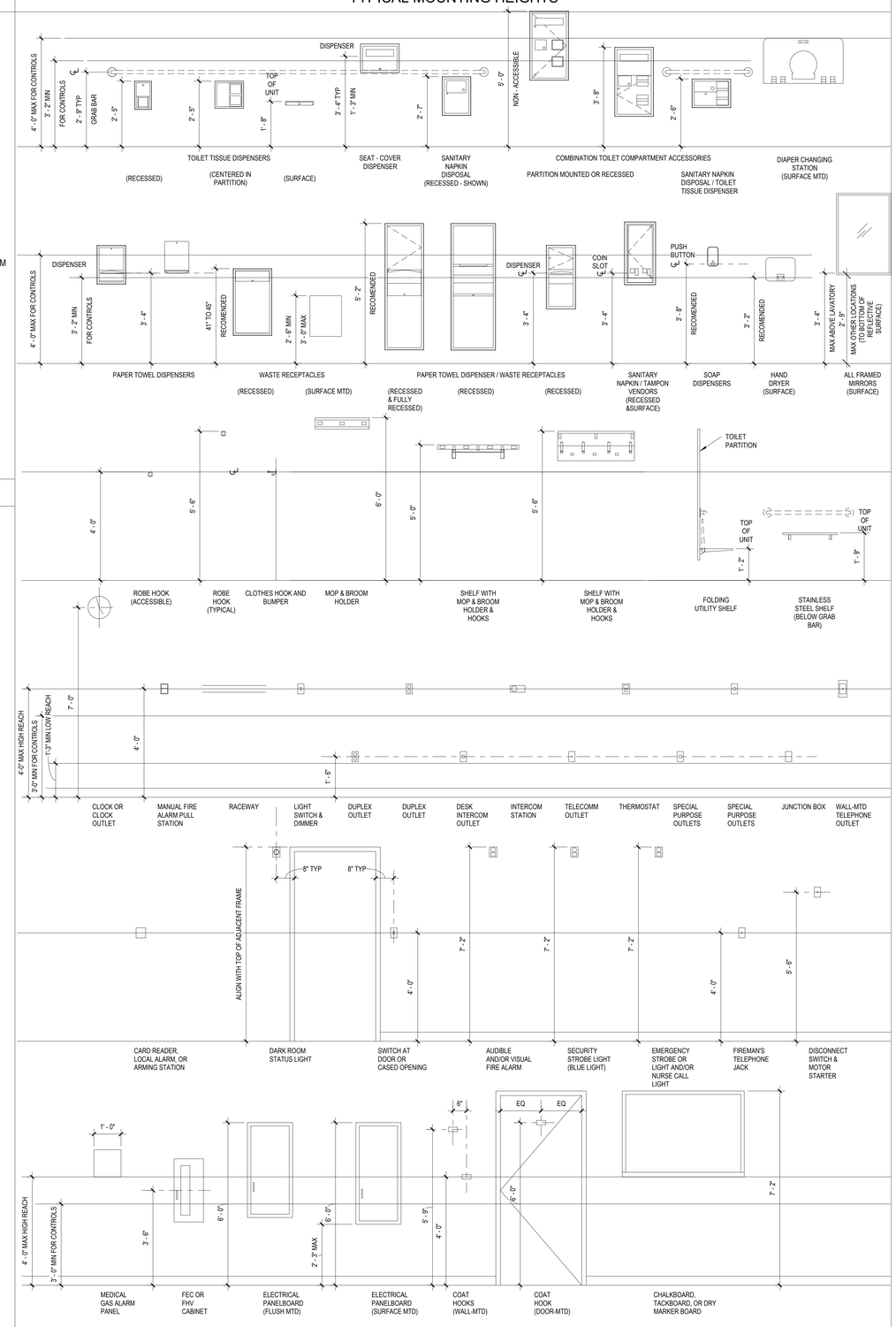

ARCHITECTURAL ABBREVIATIONS

A	
ACT	ACOUSTICAL CEILING TILE
ADJ	ADJACENT
AFF	ABOVE FINISH FLOOR
AHU	AIR HANDLING UNIT
ALT	ALTERNATE
ALUM	ALUMINUM
APPROX	APPROXIMATE
AR	AS REQUIRED
AUTO	AUTOMATIC
AUX	AUXILIARY
AV	AUDIO VISUAL
AVG	AVERAGE
B	
BAT	BATTEN
BD	BOARD
BLDG	BUILDING
BLK	BLOCKING
BM	BEAM
BO	BY OWNER
CORR	CORRIDOR
C	
CC	CONTRACTOR SUPPLIED & INSTALLED
CEM	CEMENT
CJ	CONTROL JOINT
CL	CENTER LINE
CLG	CEILING
CLR	CLEAR
CMU	CONCRETE MASONRY UNIT
COL	COLUMN
CONC	CONCRETE
CONT	CONTINUOUS
COORD	COORDINATE
CPT	CARPET
CT	CERAMIC TILE
CTR	CENTER
CTRL	CONTROL
D	
DAT	DATUM
DBL	DOUBLE
DEG	DEGREE
DEMO	DEMOLITION
DEPT	DEPARTMENT
DF	DRINKING FOUNTAIN
DIA	DIAMETER
DIFF	DIFFUSER
DIM	DIMENSION
DN	DOWN
DR	DOOR
DTL	DETAIL
DWG	DRAWING
E	
E	EAST
EA	EACH
EJ	EXPANSION JOINT
EL	ELEVATION
ELEC	ELECTRICAL
ELEV	ELEVATOR
ENCL	ENCLOSURE
EQ	EQUAL
EQUIP	EQUIPMENT
EWC	ELECTRIC WATER COOLER
EXH	EXHAUST
EXIST	EXISTING
EXP	EXPOSED
EXT	EXTERIOR
F	
FA	FIRE ALARM
FD	FLOOR DRAIN
FDN	FOUNDATION
FE	FIRE EXTINGUISHER
FEC	FIRE EXTINGUISHER CABINET
FF&E	FURNITURE, FIXTURE AND EQUIPMENT
FHC	FIRE HOSE CABINET
FIG	FIGURE
FIN	FINISH
FIXT	FIXTURE
FL	FLOOR
FO	FACE OF
FP	FIRE PROTECTION OR FIREPROOF
FT	FOOT
FTG	FOOTING
G	
GC	GENERAL CONTRACTOR
GL	GLASS
GYP BD	GYPSUM BOARD
H	
HAZ MAT	HAZARDOUS MATERIALS
HDW	HARWARE
HM	HOLLOW METAL
HT	HEIGHT
I	
INCL	INCLUDED
INSUL	INSULATION
INT	INTERIOR
J	
J-BOX	JUNCTION BOX
JAN	JANITOR
JC	JANITOR'S CLOSET
JST	JOIST
JT	JOINT
L	
LAM	LAMINATE
LAV	LAVATORY
LED	LIGHT EMITTING DIODE
LF	LINEAR FEET (FOOT)
LL	LEAD LINED
LT	LT
M	
MATL	MATERIAL
MAX	MAXIMUM
MECH	MECHANICAL
MFR	MANUFACTURER
MIN	MINIMUM
MISC	MISCELLANEOUS
MLWK	MILLWORK
MO	MASONRY OPENING
MR	MOISTURE RESISTANT
MTD	MOUNTED
MTG	MOUNTING
MTL	METAL
N	
N	NORTH
N/A	NOT APPLICABLE
NAT	NATURAL
NIC	NOT IN CONTRACT
NO	NUMBER
NTS	NOT TO SCALE
O	
OA	OVERALL
OC	ON CENTER
OFIC	OWNER FURNISHED INSTALLED BY CONTRACTOR
OH	OPPOSITE HAND
OPNG	OPENING
OPT	OPTIONAL
P	
PAT	PATTERN
PL	PLATE
PLAM	PLASTIC LAMINATE
PLAS	PLASTER OR PLASTIC
PR	PAIR
PRE	PREFINISHED
PREP	PREPARATION
PROVIDE	FURNISHE AND INSTALL
PT	PAINT
PTME	PAINT TO MATCH EXISTING
PTN	PARTITION
PWR	POWER
Q	
QT	QUARRY TILE
QTR	QUARTER
QTY	QUANTITY
R	
R	RADIUS
RB	RESILIENT BASE
RCP	REFLECTED CEILING PLAN
REC	RECESSED
RECPT	RECEPTACLE
REINF	REINFORCED
REQD	REQUIRED
RM	ROOM
RO	ROUGH OPENING
S	
S	SOUTH
SAN	SANITARY
SCHED	SCHEDULE
SF	SQUARE FOOT (FEET)
SHT	SHEET
SIM	SIMILAR
SPEC	SPECIFICATION
SPKLR	SPRINKLER
SPKR	SPEAKER
SQ	SQUARE
SS	STAINLESS STEEL
STD	STANDARD
STL	STEEL
STOR	STORAGE
SUSP	SUSPEND
SV	SHEET VINYL
T	
T&G	TOUNGE AND GROOVE
TEMP	TEMPERED
TERR	TERRAZZO
THK	THICK
TO	TOP OF
TSTAT	THERMOSTAT
TYP	TYPICAL
U	
UNO	UNLESS NOTED OTHERWISE
V	
VAR	VARIES
VC	VA SUPPLIED, CONTRACTOR INSTALLED
VCT	VINYL COMPOSITION TILE
VENT	VENTILATION
VIF	VERIFY IN FIELD
VOL	VOLUME
VV	VA SUPPLIED & INSTALLED
VWC	VINYL WALL COVERING
W	
W	WEST
W/	WITH
W/O	WITHOUT
WC	WALL COVERING
WD	WOOD
WDW	WINDOW
WWM	WELDED WIRE FABRIC

Revisions:	Date:
100% CONSTRUCTION + BID DRAWING	10/06/2023
100% CONSTRUCTION + BID DRAWING	09/28/2023
95% CONSTRUCTION DOCUMENTS	09/01/2023
65% DESIGN DEVELOPMENT	7/27/2023
35% SCHEMATIC DESIGN	6/26/2023

CONSULTANT

ARCHITECT/ENGINEER OF RECORD

BANCROFT ARCHITECTS + ENGINEERS
3300 Dundee Rd.
Northbrook, IL 60062
T: 847.952.9362
www. bancroft-ae.com
VA CONTRACT NO. 36C77623C0052
Bancroft Project No. 22-131

STAMP

LICENSED ARCHITECT
CROTAN D. ZAKARIJA
001.022.335
STATE OF ILLINOIS

Office of Construction and Facilities Management

VA U.S. Department of Veterans Affairs

Drawing Title: ARCHITECTURAL - SYMBOLS, ABBREVIATIONS AND LEGENDS	Phase: 100% CONSTRUCTION + BID DRAWINGS	Project Title: EHRM-TASS	Project Number: 586-22-703
			Building Number: 5
Approved: Project Director		Location: G.V. (Sonny) Montgomery VAMC	Drawing Number: A-001
		Issue Date: 10/06/2023 · Checked: MTB · Drawn: AM	

VA FORM 08-6231

DEMOLITION PLAN NOTES

A. REVIEW THIS DRAWING IN CONJUNCTION WITH CORRESPONDING CIVIL, STRUCTURAL, FIRE PROTECTION, MEDICAL GAS, LOW VOLTAGE SYSTEMS, PLUMBING, MECHANICAL AND ELECTRICAL DRAWINGS FOR FULL SCOPE OF DEMOLITION WORK.

B. REFER TO GENERAL SECTION DRAWINGS FOR GENERAL DEMOLITION NOTES.

C. REFER TO REFLECTED CEILING DEMOLITION PLAN(S) FOR DEMOLITION WORK AT CEILINGS.

D. VERIFY EXISTING CONDITIONS AND PROMPTLY REPORT ANY DRAWING DISCREPANCIES TO THE CONTRACTING OFFICER (CO) DURING BIDDING AND THE CONTRACTING OFFICERS REPRESENTATIVE (COR) DURING CONSTRUCTION.

E. ALL EXISTING CONSTRUCTION TO REMAIN, THAT IS AFFECTED BY DEMOLITION, SHALL BE PATCHED, PLASTERED, BE PROPERLY MEMBERED, WITH SURFACES ALIGNED SO AS TO LEAVE NO EVIDENCE OF PATCHING OR REPAIRS WHEN RECEIVING FINISHES.

F. DURING THE COURSE OF THE REMOVAL OF EXISTING FINISHES FROM ALL SURFACES INDICATED TO REMAIN (FLOORS, WALLS, PARTITIONS, CEILINGS, ETC.), AND THE SUBSTRATE BECOMES DAMAGED BEYOND REPAIR, REPLACE DAMAGED SECTION(S) TO THE POINT WHERE NEW FINISHES CAN BE APPLIED AND VIEWED TO BE WITHOUT DETECTION OF DAMAGED AREAS.

G. WHERE WALLS HAVE BEEN REMOVED, FILL ALL VOIDS IN THE FLOOR WITH CONCRETE AS REQUIRED TO MATCH THE EXISTING CONSTRUCTION AND MAINTAIN ALL FIRE RATINGS, PRIOR TO THE PATCHING AND LEVELING REQUIRED FOR RECEIVING NEW FLOOR FINISHES.

H. ALL DIMENSIONS INDICATED FOR LENGTHS OF WALLS/PARTITIONS, TO BE REMOVED, ARE APPROXIMATE AND SUBJECT TO ANY ADDITIONAL DEMOLITION NECESSARY TO PROPERLY SPLICE IN THE NEW WORK ASSEMBLY AND PROVIDE FOR DOOR UNIT INSTALLATIONS AS PER THE DETAILS.

I. SEAL/FIRESTOP ALL OPENINGS IN EXISTING SMOKE AND FIRE RATED WALLS/PARTITIONS AND/OR FIRE RATED FLOORS AND CEILINGS THAT ARE ENCOUNTERED DURING DEMOLITION. INCLUDES ALL EXPOSED CONDUIT AND PIPING.

J. REPLACE/RESPRAY FIREPROOFING THAT IS MISSING, DAMAGED, HAS BEEN KNOCKED OFF, OR HAS BEEN REMOVED FROM FLOORS, BEAMS, COLUMNS, METAL DECKING, ETC. DURING THE DEMOLITION.

DEMOLITION PLAN LEGEND

EXISTING PARTITION WALL TO REMAIN.
ALL EXISTING WALLS TO REMAIN WITHIN PROJECT SCOPE ARE TO BE INSULATED. REMOVE AND REINSTALL GYPSUM BOARD ON ONE SIDE OF WALL AS NECESSARY TO INSTALL NEW INSTALLATION.

REMOVE PARTITION WALLS INDICATED BY DASHED LINES. REMOVE ELECTRICAL, SWITCHES, PHONE AND DATA OUTLETS AND COVER PLATES AS REQUIRED TO FACILITATE WALL REMOVAL.

REMOVE DOOR AND FRAME INDICATED BY DASHED LINES. SALVAGE DOOR HARDWARE (LEVER LOCK SETS ONLY) FOR POSSIBLE REUSE. STORE AS INDICATED BY OWNER.

DEMOLITION CEILING NOTES

A. REFER TO LIFE SAFETY DRAWINGS FOR LOCATION OF TEMPORARY CONSTRUCTION BARRIERS, ACCESS, AND EXITING REQUIREMENTS.

B. IN AREAS OF NEW WORK, REMOVE COMPLETELY ALL EXISTING CEILING AND SOFFIT CONSTRUCTION, UNLESS OTHERWISE INDICATED. NEW CEILINGS SHALL NOT BE ATTACHED TO EXISTING CEILING SYSTEMS. REMOVE EXISTING SUSPENSION SYSTEMS ENTIRELY, INCLUDING HANGERS AND THEIR ANCHORS BEFORE INSTALLING NEW.

C. REMOVE ALL ELECTRICAL POWER AND CONTROLS WIRING, CONDUITS, JUNCTION BOXES AND SUPPORT SYSTEMS ASSOCIATED WITH REMOVED CEILING FIXTURES, DEVICES AND EQUIPMENT. REMOVE WIRING BACK TO RESPECTIVE POWER PANELS.

D. REVIEW AND COORDINATE THIS DRAWING IN CONJUNCTION WITH CORRESPONDING FIRE PROTECTION, LOW VOLTAGE SYSTEMS, MEDICAL GAS, PLUMBING, MECHANICAL AND ELECTRICAL DRAWINGS FOR FULL SCOPE OF DEMOLITION WORK, AS WELL AS, FOR IDENTIFYING EXISTING PIPING, CONDUITS, DUCTWORK, EQUIPMENT, SYSTEMS COMPONENTS, ETC. TO REMAIN WITHIN AREAS OF DEMOLITION.

E. REFER TO GENERAL SECTION DRAWINGS FOR GENERAL DEMOLITION NOTES.

F. EXISTING FIRE PROTECTION SPRINKLER SYSTEM TO REMAIN OPERATIONAL DURING CONSTRUCTION. WHEN EXISTING CEILING IS DEMOLISHED SPRINKLER HEADS NEED TO BE ROTATED 90 DEGREES TO FACE FLOOR OR ROOF CONSTRUCTION ABOVE. HEADS TO BE ROTATED DOWN AFTER INSTALLATION OF NEW CEILING INTO EXISTING AND NEW LOCATIONS AS REQUIRED BY LAYOUT MODIFICATIONS AND THE SPECIFICATIONS.

G. ANY ELECTRICAL FIXTURES, DEVICES AND EQUIPMENT THAT ARE NOT IDENTIFIED ON THESE DRAWINGS, IN THE AREAS OF CEILING DEMOLITION, ARE TO BE CAREFULLY REMOVED FROM THE CEILING, PROTECTED, TEMPORARILY HUNG, AND THEN REATTACHED IN THE SAME LOCATIONS AS WHICH THEY WERE FOUND, PRIOR TO DEMOLITION.

H. SEAL/FIRESTOP ALL OPENINGS IN EXISTING SMOKE AND FIRE RATED WALLS/PARTITIONS AND/OR FIRE RATED FLOORS AND CEILINGS THAT ARE ENCOUNTERED DURING DEMOLITION. INCLUDES ALL EXPOSED CONDUIT AND PIPING.

I. ALL EXISTING LIGHTING, DEVICES, CONDUIT, JUNCTION BOXES AND EQUIPMENT; LOW VOLTAGE DEVICES, EQUIPMENT AND SYSTEMS SUPPORT WORK; LIFE SAFETY SPEAKERS, EXIT SIGNS, DEVICES AND EQUIPMENT; MECHANICAL GRILLS, DIFFUSERS, DUCTWORK, AND EQUIPMENT; ALONG WITH THE FIRE PROTECTION SPRINKLER HEADS AND SUPPORT SYSTEM ARE TO REMAIN IN EXISTING LOCATIONS AND PROTECTED, UNLESS OTHERWISE NOTED.

J. CONTRACTOR TO CAREFULLY REMOVE SECTIONS OF EXISTING CEILING TILE AND SUPPORTING GRID WORK TO ALLOW FOR THE INSTALLATION OF ALL REQUIRED CONDUIT AND ELECTRICAL EQUIPMENT PER ELECTRICAL DRAWINGS (E, EP, ELD AND EL). CONTRACTOR SHALL REINSTALL CEILING IN EXACT LOCATION. CONTRACTOR TO REPLACE ANY CEILING TILES, GRID AND SYSTEM SUPPORT WORK DAMAGED DURING CONSTRUCTION TO MATCH EXISTING. REFER TO ELECTRICAL SHEETS FOR ADDITIONAL INFORMATION.

DEMOLITION CEILING LEGEND

NOTE: SYMBOLS FOR REFERENCE ONLY, ACTUAL SYMBOL SCALE AT DRAWINGS MIGHT VARY

- EXISTING SUSPENDED ACOUSTICAL CEILING TILE TO BE REMOVED
- EXISTING GYPSUM BOARD CEILING TO BE REMOVED
- WAP — EXISTING WIRELESS ACCESS POINT TO BE REMOVED
- EXISTING 2'X4' LIGHT FIXTURE TO BE REMOVED
- EXISTING 2'X2' LIGHT FIXTURE TO BE REMOVED
- EXISTING PENDANT LIGHT FIXTURE TO BE REMOVED
- EXISTING SPRINKLER HEAD TO BE REMOVED
- EXISTING SUPPLY DIFFUSER TO BE REMOVED
- EXISTING RETURN DIFFUSER TO BE REMOVED
- EXISTING EXHAUST VENT TO BE REMOVED
- SD — EXISTING SMOKE DETECTOR TO BE REMOVED
- EXISTING CEILING MOUNTED LIGHT FIXTURE TO BE REMOVED

CONSTRUCTION PLAN NOTES

A. REVIEW THIS DRAWING IN CONJUNCTION WITH CORRESPONDING FIRE PROTECTION, PLUMBING, MECHANICAL AND ELECTRICAL DRAWINGS FOR FULL SCOPE OF WORK.

B. ALL DIMENSIONS ARE TO THE FINISH FACE OF PARTITIONS UNLESS OTHERWISE NOTED.

C. ALL NEW CONSTRUCTION WHICH ENGAGES EXISTING SHALL BE JOINED IN A CAREFUL MANNER BEING PROPERLY ALIGNED AND MEMBERED SO AS TO LEAVE NO EVIDENCE OF PATCHING OR REPAIR. PATCH TO MATCH ALL EXISTING WALLS, FLOORS, AND CEILINGS AFFECTED BY NEW CONSTRUCTION.

D. CONTRACTOR SHALL REPAIR AND PATCH ALL EXISTING WALL CONSTRUCTION WHERE CRACKS, DENTS, HOLES OR OTHER IMPERFECTIONS HAVE OCCURRED AND PREPARE SMOOTH SURFACE FOR NEW FINISH. ANY DAMAGE TO SUCH AREAS SHALL BE RESTORED TO A "LIKE-NEW" CONDITION AS NOTED PRIOR TO THE OWNER'S ACCEPTANCE OF THE WORK.

E. PROVIDE SILICONE SEALANT JOINTS AT JUNCTION OF ALL PLUMBING FIXTURES & COUNTERTOPS TO A WALL SURFACE.

F. DO NOT SCALE DRAWINGS. USE THE GIVEN DIMENSIONS. COORDINATE ALL SHOP DRAWING REQUIREMENTS.

G. LEVEL ENTIRE FLOOR WITH CEMENT UNDERLAYMENT IN AREAS TO RECEIVE FLOORING.

H. ALL CUTTING, CORING AND DRILLING OF EXISTING CONCRETE MEMBERS SHALL NOT DAMAGE EXIST. REINFORCING STEEL. PRIOR TO CORING VERIFY SIZE AND LOCATION WITH THE COR AND OBTAIN A SUCCESSFUL REVIEW FROM THE STRUCTURAL ENGINEER.

I. PROJECT LIMIT LINES ARE SHOWN FOR ORIENTATION ONLY AND SHOULD NOT BE CONSTRUED TO BE COMPLETE. REFER TO OTHER DRAWINGS FOR UTILITY DEMOLITION AND NEW CONNECTIONS, ETC.

J. INSTALL ALL DOORS WITH MINIMUM 18 INCHES CLEAR FROM INSIDE FACE OF LATCH SIDE OF JAMB TO FINISH FACE OF WALL ON PULL SIDE OF DOOR.

K. IT SHALL BE THE RESPONSIBILITY OF EACH CONTRACTOR TO ADEQUATELY PROTECT EXISTING CONSTRUCTION AND FINISHES TO REMAIN IN PLACE DURING DEMOLITION AND CONSTRUCTION PHASES OF THE WORK. ALL FINISHED AREAS ADJACENT TO AND INCLUDED IN THE AREAS OF CONSTRUCTION SHALL BE PROTECTED FROM DUST AND DIRT THROUGH THE USE OF COR APPROVED DUSTPROOF PROTECTION.

L. EACH CONTRACTOR SHALL KEEP ACCURATE RECORDS OF ALL CONCEALED WORK THAT DIFFERS FROM THE CONTRACT DRAWINGS SO THAT ACCURATE RECORD DRAWINGS/ AS BUILTS CAN BE KEPT BY THE GENERAL CONTRACTOR AND PROVIDED TO THE COR FOR DISTRIBUTION TO THE VA AND THE ARCHITECT AT THE COMPLETION OF THE PROJECT.

M. ALL PARTITION FACES THAT FACE THE CORRIDOR ARE TO HAVE "MOLD TOUGH GYP" OR EQUAL TO 4' A.F.F.

N. ALL NEW CONSTRUCTION WHICH ENGAGES EXISTING SHALL BE JOINED IN A CAREFUL MANNER BEING PROPERLY ALIGNED AND MEMBERED SO AS TO LEAVE NO EVIDENCE OF PATCHING OR REPAIR. PATCH TO MATCH ALL EXISTING WALLS, FLOORS, AND CEILINGS AFFECTED BY NEW CONSTRUCTION.

O. CONTRACTOR SHALL REPAIR AND PATCH ALL EXISTING WALL CONSTRUCTION WHERE CRACKS, DENTS, HOLES OR OTHER IMPERFECTIONS HAVE OCCURRED AND PREPARE SMOOTH SURFACE FOR NEW FINISH. ANY DAMAGE TO SUCH AREAS SHALL BE RESTORED TO A "LIKE-NEW" CONDITION AS NOTED PRIOR TO THE OWNER'S ACCEPTANCE OF THE WORK.

P. DO NOT SCALE DRAWINGS. USE THE GIVEN DIMENSIONS. COORDINATE ALL SHOP DRAWING REQUIREMENTS.

Q. REFERENCE ELECTRICAL & PLUMBING DRAWINGS IN ADDITION TO THE ARCHITECTURAL DRAWINGS IN DEFINING THE SCOPE OF WORK. SUBCONTRACTORS FOR EACH TRADE ARE ADVISED THAT INFORMATION PERTINENT TO THEIR WORK MAY OCCUR IN OTHER PORTIONS OF THE CONTRACT DOCUMENTS.

R. PROJECT LIMIT LINES ARE SHOWN FOR ORIENTATION ONLY AND SHOULD NOT BE CONSTRUED TO BE COMPLETE. REFER TO OTHER DRAWINGS FOR UTILITY DEMOLITION AND NEW CONNECTIONS, ETC.

S. IT SHALL BE THE RESPONSIBILITY OF EACH CONTRACTOR TO ADEQUATELY PROTECT EXISTING CONSTRUCTION AND FINISHES TO REMAIN IN PLACE DURING DEMOLITION AND CONSTRUCTION PHASES OF THE WORK. ALL FINISHED AREAS ADJACENT TO AND INCLUDED IN THE AREAS OF CONSTRUCTION SHALL BE PROTECTED FROM DUST AND DIRT THROUGH THE USE OF COR APPROVED DUSTPROOF PROTECTION.

T. EACH CONTRACTOR SHALL KEEP ACCURATE RECORDS OF ALL CONCEALED WORK THAT DIFFERS FROM THE CONTRACT DRAWINGS SO THAT ACCURATE RECORD DRAWINGS/ AS-BUILTS CAN BE KEPT BY THE GENERAL CONTRACTOR AND PROVIDED TO THE COR FOR DISTRIBUTION TO THE VA AND THE ARCHITECT AT THE COMPLETION OF THE PROJECT.

CONSTRUCTION CEILING NOTES

A. REVIEW THIS DRAWING IN CONJUNCTION WITH CORRESPONDING FIRE PROTECTION, PLUMBING, MECHANICAL AND ELECTRICAL DRAWINGS FOR FULL SCOPE OF WORK. COORDINATE INSTALLATION OF DISCIPLINES SO THERE IS NO INTERFERENCE.

B. CEILING HEIGHT IS 8'-0" U.N.O.

C. CENTER ALL CEILING GRIDS IN EACH ROOM U.N.O.

D. CENTER ALL FIXTURES WITHIN CEILING TILE U.N.O.

E. COORDINATE WITH MECHANICAL AND ELECTRICAL DRAWINGS FOR ADDITIONAL CEILING ACCESS POINTS WHICH MAY BE REQUIRED AT AREAS FOR MECHANICAL AND ELECTRICAL SERVICE WORK.

F. ALL PATIENT LIFT SYSTEM TRACKS, BRIDGING AND STRUCTURAL BRACING TO BE FURNISHED AND INSTALLED BY GC. GENERAL CONTRACTOR TO COORDINATE INSTALLATION.

G. GENERAL CONTRACTOR SHALL COORDINATE INSTALLATION OF ALL CEILING MOUNTED UTILITIES AS NOT TO INTERFERE WITH THE INSTALLATION OF THE PATIENT LIFTS AND ALL OTHER CEILING MOUNTED UTILITIES.

GENERAL CEILING LEGEND

NOTE: SYMBOLS FOR REFERENCE ONLY, ACTUAL SYMBOL SCALE AT DRAWINGS MIGHT VARY

- NEW SUSPENDED ACOUSTICAL CEILING TILE
- NEW GYPSUM BOARD CEILING
- WAP — NEW WIRELESS ACCESS POINT
- NEW 2'X4' LIGHT FIXTURE
- NEW 2'X2' LIGHT FIXTURE
- NEW PENDANT LIGHT FIXTURE
- NEW CEILING MOUNTED LIGHT FIXTURE
- NEW SPRINKLER HEAD
- NEW SUPPLY DIFFUSER
- NEW RETURN DIFFUSER
- NEW EXHAUST VENT
- F — NEW FIRE ALARM DEVICES REFER TO ELECTRICAL DRAWINGS
- S P — NEW SPEAKER
- NEW SECURITY CAMERA

FINISH PLAN NOTES

A. FOLLOW MANUFACTURER'S REQUIREMENTS FOR SUB-FLOOR PREPARATION.

B. FLOOR LEVELING AS NECESSARY BASED ON SUB-FLOOR CONDITION.

C. REFER TO **SHEET SERIES "AF"** FOR ROOM FINISH SCHEDULE AND LEGEND.

D. "CG" DENOTES CORNER GUARD LOCATION. "EG" DENOTES END GUARD LOCATION. REFER TO DETAILS AT **SHEET SERIES "AF".**

E. REFER TO INTERIOR ELEVATIONS FOR HEIGHT AND LOCATION OF CORNER GUARD UNDER MEMORY BOX. TYPICAL CONDITION AT ALL CORNER MEMORY BOX ALL LOCATIONS.

F. ALL FINISHES TO BE CONFIRMED BY THE VA INTERIOR DESIGNER.

G. CONTRACTOR SHALL REPAIR AND PATCH ALL EXISTING WALL CONSTRUCTION WHERE CRACKS, DENTS, HOLES OR OTHER IMPERFECTIONS HAVE OCCURRED. PREPARE SMOOTH SURFACE FOR NEW FINISH.

FINISHES ABBREVIATIONS

NOTE: ABBREVIATIONS BELOW ARE PER VA FINISH STANDARDS AND MAY DIFFER FROM THE ARCHITECTURAL ABBREVIATIONS SHOWN ON A001.

AT	ACOUSTICAL CEILING TILE	RES	RESINOUS FLOORING
CP	CARPET	RES-W	RESINOUS/EPOXY WALL/CEILING
CPT	CARPET TILE	RF	RUBBER FLOORING
CT	CERAMIC TILE	RRF	RAISED RUBBER FLOORING
EFTR	EXISTING FINISH TO REMAIN	RSF	RESILIENT SHEET FLOORING (CHEMICALLY WELDED SEAMS)
EPY	EPOXY FLOORING	S	SOLID SURFACE
EXP	EXPOSED	SC	HIGH BUILD GLAZED COATING (SPECIAL COATING)
GWB	GYPSUM WALLBOARD SYSTEMS	SD	STATIC DISSIPATIVE
LN	LINOLEUM	SP	SPECIAL FACED
LVT	LUXURY VINYL TILE	SS	STAINLESS STEEL
MAT	CARPET MAT(WALK-OFF MAT)	ST	STONE(CAST)
P	PAINT	SVT	SOLID VINYL FLOOR TILE
PRB	PROFILE BASE	TER	TERRAZZO, POURED
PT	PORCELAIN TILE	TT	TERRAZZO TILE(PLASTIC MATRIX)
QT	QUARRY TILE	WC	WALL COVERING
RAF	RESILIENT ATHLETIC FLOORING	VCT	VINYL COMPOSITE TILE
RB	RESILIENT BASE (RUBBER OR VINYL WITH FACTORY FORMED INSIDE AND OUTSIDE CORNERS)	WD	WOOD
		WSF	WELDED SEAM SHEET FLOORING (HEAT WELDED WITH ROD)

FINISH PLAN LEGEND

NOTE: SEE FINISH LEGEND AT CORRESPONDING FINISH PLAN SHEETS AND INTERIOR ELEVATION SHEETS.

WAYFINDING PLAN NOTES

A. ALL SIGNAGE TO COMPLY WITH VA SIGNAGE DESIGN MANUAL.

B. FINAL SIGNAGE TYPE, DESIGN, CONTENT AND LOCATION TO BE APPROVED BY THE VA INTERIOR DESIGNER.

C. CONTRACTOR TO REPLACE EXISTING DOOR SIGNAGE WITH NEW TO COMPLY WITH LATEST VA DESIGN STANDARDS.

D. VA TO PROVIDE STATION COLORS TO CONTRACTOR AND REVIEW ALL SIGNAGE PRIOR TO FABRICATION.

E. FOR SIGNAGE TYPES, DETAILS AND SCHEDULES, REFER TO **SHEET SERIES "AW".**

F. SEE A001 FOR SIGNAGE TAG SYMBOL LEGEND.

G. ROOM NUMBERS SHOWN ON PLAN ARE FOR REFERENCE ONLY. FINAL NUMBERS WILL BE PROVIDED DURING SUBMITTAL PROCESS.

H. HEIGHT AND SIZE OF DIMENSIONAL LETTERS TO MATCH BUILDING STANDARD AND TO BE CONFIRMED DURING SUBMITTAL PROCESS.

EQUIPMENT AND FFE PLAN NOTES

A. ABBREVIATIONS FOR THE EQUIPMENT LEGEND ARE AS FOLLOWS:

- AI — ACQUISITION / INSTALLATION
- CC — CONTRACTOR FURNISHED CONTRACTOR INSTALLED
- VV — GOVERNMENT FURNISHED GOVERNMENT INSTALLED
- VC — GOVERNMENT FURNISHED CONTRACTOR INSTALLED
- JSN — JOINT SCHEDULE NUMBER

A. JSN'S CORRESPOND TO THE VA EQUIPMENT GUIDE LIST. JSN'S STARTING WITH 'U' DENOTES EQUIPMENT WHERE A JSN WAS NOT FOUND IN THE EQUIPMENT GUIDE LIST.

B. FINAL QUANTITIES ARE TO BE APPROVED BY THE VA.

C. PROVIDE SHEET METAL PLATE BLOCKING, 8" HIGH X 16GA FOR ALL WALL HUNG EQUIPMENT AND MILLWORK.

D. REFER TO **"Q" SHEET SERIES** FOR EQUIPMENT SCHEDULES.

E. SEE **A001** FOR SYMBOLS AND ABBREVIATIONS.

INTERIOR ELEVATIONS PLAN NOTES

A. REFER TO **"Q" SHEET SERIES** FOR FULL EQUIPMENT SCHEDULE.

B. REFER TO **"AW" SHEET SERIES** FOR FULL SIGNAGE SCHEDULE.

C. COORDINATE WALL BLOCKING LOCATIONS WITH VA/COR.

D. REFER TO **A001** FOR TYPICAL MOUNTING HEIGHTS.

E. WHERE APPLICABLE, STRUCTURAL ELEMENTS ARE SHOWN FOR REFERENCE ONLY. REFER TO STRUCTURAL DRAWINGS FOR SCOPE OF WORK.

Revisions:	Date:
100% CONSTRUCTION + BID DRAWING	10/06/2023
100% CONSTRUCTION + BID DRAWING	09/28/2023
95% CONSTRUCTION DOCUMENTS	09/01/2023
65% DESIGN DEVELOPMENT	7/27/2023
35% SCHEMATIC DESIGN	6/26/2023

CONSULTANT

ARCHITECT/ENGINEER OF RECORD

BANCROFT ARCHITECTS + ENGINEERS
3300 Dundee Rd.
Northbrook, IL 60062
T: 847.952.9362
www.bancroft-ae.com
VA CONTRACT NO. 36C77623C0052
Bancroft Project No. 22-131

STAMP

LICENSED ARCHITECT CROTAN D. ZAKARIJA 001.022335 STATE OF ILLINOIS
8/1/23

Office of Construction and Facilities Management

VA U.S. Department of Veterans Affairs

Drawing Title: ARCHITECTURAL - TYPICAL SHEET NOTES AND LEGENDS

Phase: 100% CONSTRUCTION + BID DRAWINGS

Project Title: EHRM-TASS

Project Number: 586-22-703

Building Number: 5

Approved: Project Director

Location: G.V. (Sonny) Montgomery VAMC

Issue Date: 10/06/2023 | Checked: MTB | Drawn: AM

Drawing Number: A-002

VA FORM 08-6231

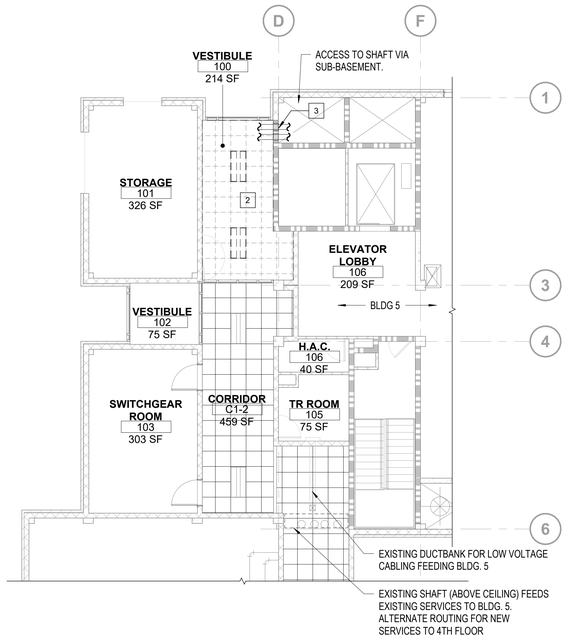

N

1 **ARCHITECTURAL CEILING PLAN - 1ST FLOOR DEMOLITION**

1/8" = 1'-0"

0 4' 8' 16'

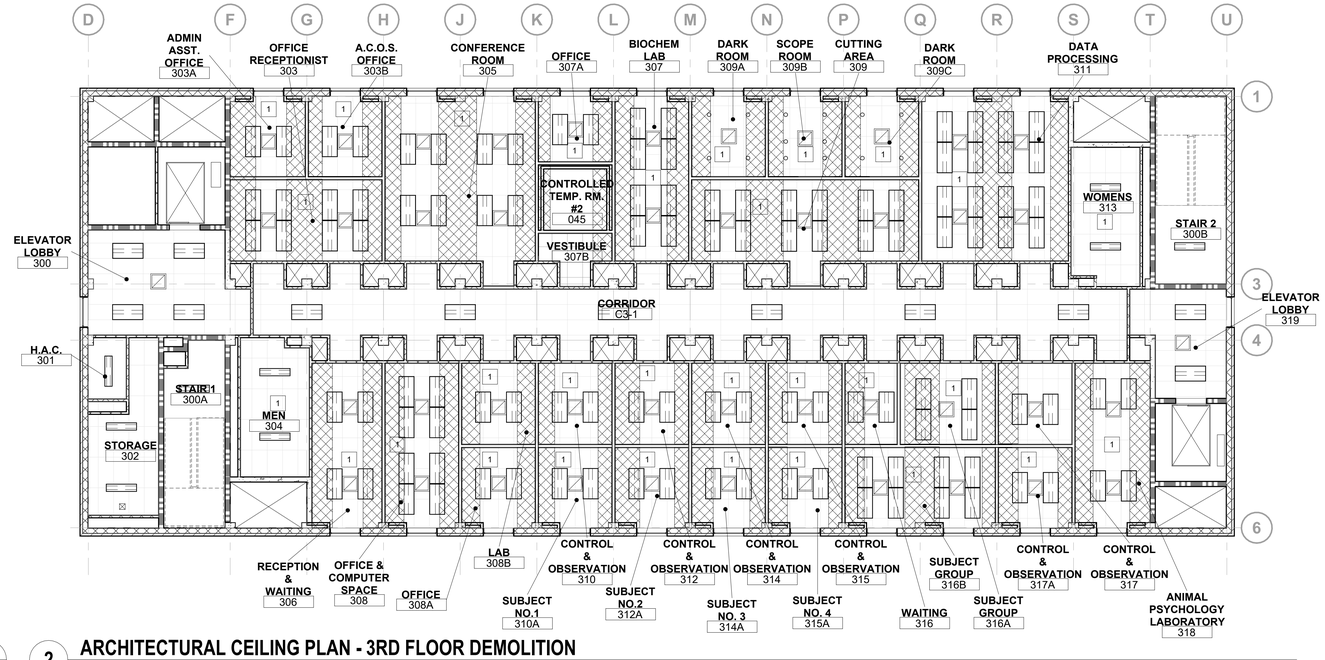

N

2 **ARCHITECTURAL CEILING PLAN - 3RD FLOOR DEMOLITION**

1/8" = 1'-0"

0 4' 8' 16'

GENERAL NOTES

1. REVIEW THIS DRAWING IN CONJUNCTION WITH CORRESPONDING FIRE PROTECTION, PLUMBING, MEDICAL GAS, MECHANICAL, ELECTRICAL AND TECHNOLOGY DRAWINGS FOR FULL SCOPE OF DEMOLITION WORK. COORDINATE EXTENTS OF DEMOLITION WITH NEW PLAN
2. FIRESTOP WALLS AS REQUIRED UPON COMPLETION OF PIPING WORK.
3. ADD / ALTERNATE #1:
   REMOVE ALL EXISTING WALL TILE (4"x4" 48" AFF) FROM CMU WALL IN ROOMS: LOBBY-400 | CORRIDOR 400C | LOBBY 400D. CURRENT SCOPE ONLY REMOVES TILE FROM COLUMN LOCATIONS IN CORRIDOR 400C.

DEMOLITION KEY NOTES

1 REMOVE EXISTING CEILING, GRID, AND ACOUSTICAL TILE AS NEEDED TO PERFORM PLUMBING (SANITARY) WORK AS NEEDED. A/E TO PROVIDE ALL NEEDED DETAILS FOR THE REMOVAL OF ABANDONED PLUMBING FIXTURES. REPLACE ALL COMPONENTS WHEN WORK IS COMPLETED.

2 REMOVE EXISTING CEILING, GRID, AND ACOUSTICAL TILE, INCLUDING ALL RELATED MOLDINGS, TRIM, WIRE SUPPORTS, AND/OR BRACING THROUGHOUT THE AREA.

3 LOCATION FOR NEW MECHANICAL PIPE ROUTING. CREATE NEW OPENINGS THRU CMU WALL.

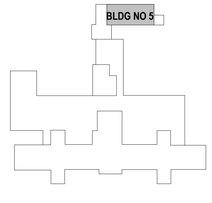

KEYPLAN

100% CONSTRUCTION + BID DRAWING	10/06/2023
100% CONSTRUCTION + BID DRAWING	09/28/2023
95% CONSTRUCTION DOCUMENTS	09/01/2023
65% DESIGN DEVELOPMENT	7/27/2023
35% SCHEMATIC DESIGN	6/26/2023
Revisions:	Date:

CONSULTANT

ARCHITECT/ENGINEER OF RECORD

BANCROFT ARCHITECTS + ENGINEERS
3300 Dundee Rd.
Northbrook, IL 60062
T: 847.922.9362
www.bancroft-ae.com
VA CONTRACT NO. 36C77623C0052
Bancroft Project No. 22-131

STAMP

LICENSED ARCHITECT CROTAN D. ZAKARIJA 001.022.2021 STATE OF ILLINOIS 10/6/23

Office of Construction and Facilities Management

VA U.S. Department of Veterans Affairs

Drawing Title: ARCHITECTURAL - DEMOLITION PLAN AND CEILING - 3RD FLOOR

Phase: 100% CONSTRUCTION + BID DRAWINGS

Project Title: EHRM-TASS

Project Number: 586-22-703

Building Number: 5

Approved: Project Director

Location: G.V. (Sonny) Montgomery VAMC

Issue Date: 10/06/2023 | Checked: MTB | Drawn: AM

Drawing Number: AD103

VA FORM 08-6231

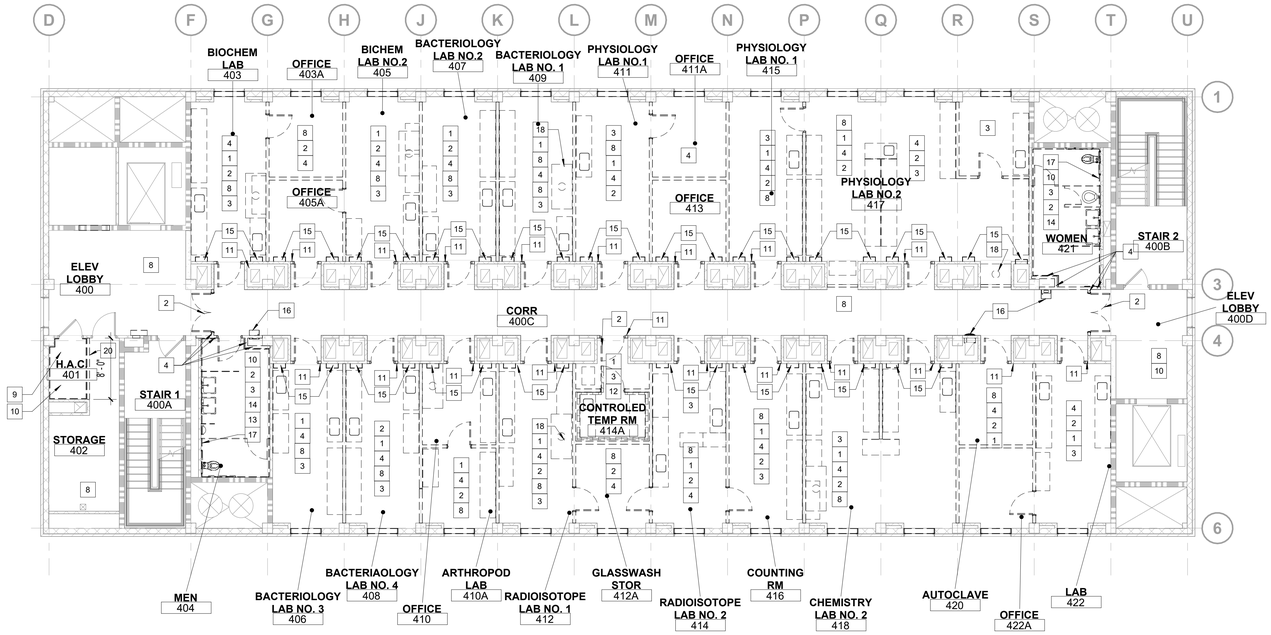

N

1 **DEMOLITION PLAN - 4TH FLOOR**

1/8" = 1'-0"

0 4' 8' 16'

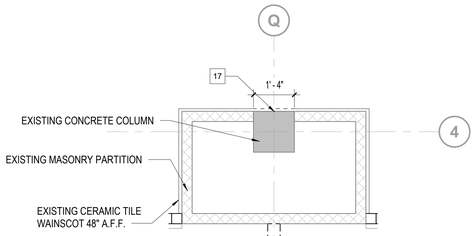

5 **DETAIL @ CORRIDOR COLUMN TYP.**

1/2" = 1'-0"

0 1' 2' 4'

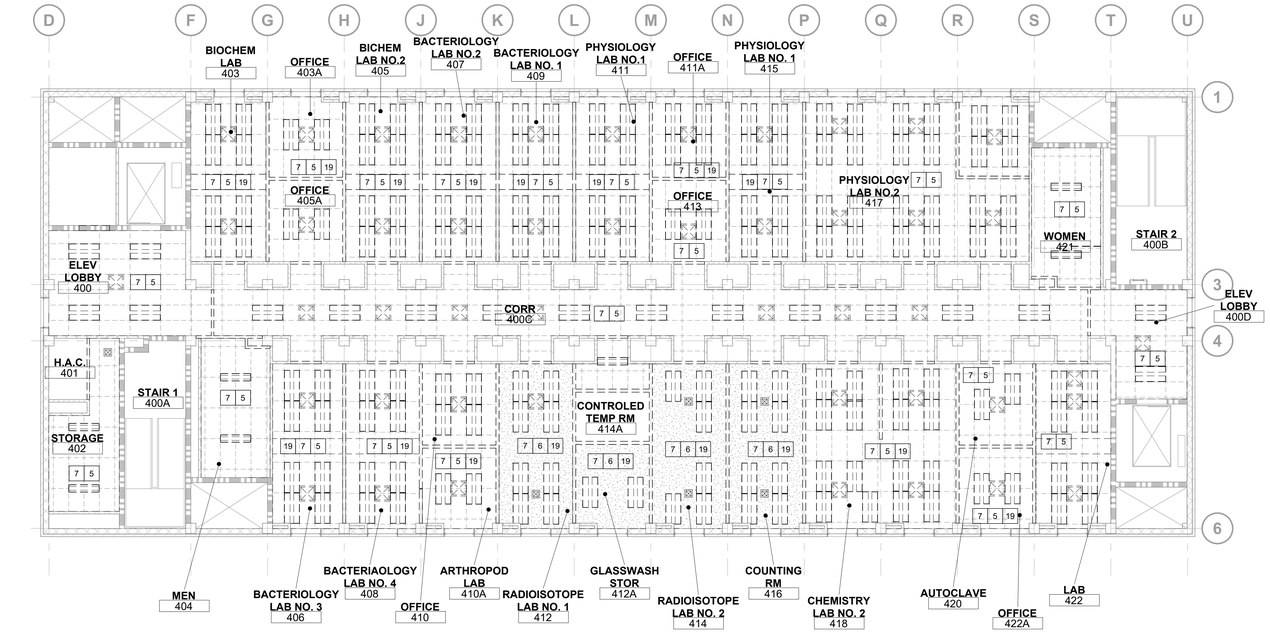

N

2 **DEMOLITION CEILING PLAN - 4TH FLOOR**

1/8" = 1'-0"

0 4' 8' 16'

GENERAL NOTES

1. REVIEW THIS DRAWING IN CONJUNCTION WITH CORRESPONDING FIRE PROTECTION, PLUMBING, MEDICAL GAS, MECHANICAL, ELECTRICAL AND TECHNOLOGY DRAWINGS FOR FULL SCOPE OF DEMOLITION WORK. COORDINATE EXTENTS OF DEMOLITION WITH NEW PLAN
2. FIRESTOP WALLS AS REQUIRED UPON COMPLETION OF PIPING WORK.
3. ADD / ALTERNATE #1:
   REMOVE ALL EXISTING WALL TILE (4"x4" 48" AFF) FROM CMU WALL IN ROOMS: LOBBY-400 | CORRIDOR 400C | LOBBY 400D. CURRENT SCOPE ONLY REMOVES TILE FROM COLUMN LOCATIONS IN CORRIDOR 400C.

DEMOLITION KEY NOTES

1 REMOVE EXISTING COUNTER AND ALL RELATED CASEWORK AND SUPPORTS AS WELL AS CABINETRY AND DRAWERS.

2 REMOVE EXISTING DOOR, FRAME AND ALL ASSOCIATED HARDWARE.

3 REMOVE EXISTING PLUMBING FIXTURE AND ASSOCIATED COMPONENTS. REFER TO PLUMBING DRAWINGS FOR ADDITIONAL INFORMATION.

4 REMOVE EXISTING PARTITION AND ALL ASSOCIATED COMPONENTS.

5 REMOVE EXISTING CEILING, GRID, AND ACOUSTICAL TILE, INCLUDING ALL RELATED MOLDINGS, TRIM, WIRE SUPPORTS, AND/OR BRACING THROUGHOUT THE AREA.

6 REMOVE EXISTING GYPSUM BOARD CEILING AND ASSOCIATED STRUCTURE/COMPONENTS.

7 REMOVE EXISTING LIGHT FIXTURES. REFER TO ELECTRICAL DRAWINGS FOR ADDITIONAL INFORMATION.

8 REMOVE ALL FLOORING AND ADHESIVE. REMOVE ALL WALL BASE AND GLUE.

9 REMOVE ALL WALL FINISHES. PREP SURFACES FOR NEW WALL PROTECTION.

10 REMOVE ALL FLOORING TILE AND MORTAR. PREP FOR NEW FINISHES.

11 REMOVE PORTION OF CMU WALL BETWEEN SHAFTS. CLEAN AND PREP ENDS OF BLOCK WHEN COMPLETE.

12 REMOVE ALL WALK-IN COOLER PANELS, DOORS, FLOORS, CEILINGS, AND ALL ASSOCIATED COMPONENTS AND HARDWARE.

13 REMOVE ALL WALL AND FLOOR TILE. CLEAN AND PREP WALL FOR NEW FINISHES.

14 REMOVE ALL TOILET PARTITIONS, PRIVACY PANELS, AND ALL ASSOCIATED HARDWARE.

15 EXISTING ELECTRICAL PANEL TO BE REMOVED. REFER TO ELECTRICAL DRAWINGS FOR ADDITIONAL INFORMATION.

16 REMOVE DRINKING FOUNTAINS AND ALL ASSOCIATED PLUMBING COMPONENTS - REFER TO PLUMBING DRAWINGS FOR ADDITIONAL INFORMATION.

17 REMOVE 4" X 4" WALL TILE (48" A.F.F.) WALL TILE AND MORTAR. PREP SURFACES FOR NEW WALL TILE.

18 REMOVE LAB HOOD EQUIPMENT.

19 EXISTING PARTITIONS ARE OF A MODULAR TYPE PANEL. REMOVE ALL MOUNTING HARDWARE INCLUDING TRACKS AND SUPPORT SYSTEMS ABOVE CEILING.

20 REMOVE PORTION OF CMU WALL.

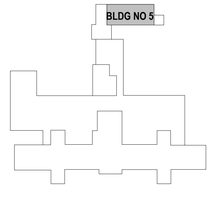

KEYPLAN

100% CONSTRUCTION + BID DRAWING	10/06/2023
100% CONSTRUCTION + BID DRAWING	09/28/2023
95% CONSTRUCTION DOCUMENTS	09/01/2023
65% DESIGN DEVELOPMENT	7/27/2023
35% SCHEMATIC DESIGN	6/26/2023
Revisions:	Date:

CONSULTANT

ARCHITECT/ENGINEER OF RECORD

BANCROFT ARCHITECTS + ENGINEERS
3300 Dundee Rd.
Northbrook, IL 60062
T: 847.952.9362
www.bancroft-ae.com

VA CONTRACT NO. 36C77623C0052 Bancroft Project No. 22-131

STAMP

LICENSED ARCHITECT CROTAN D. ZAKARIJA 001-022357 STATE OF ILLINOIS 10/6/23

Office of Construction and Facilities Management

VA U.S. Department of Veterans Affairs

Drawing Title: ARCHITECTURAL - DEMOLITION PLAN AND CEILING - 4TH FLOOR

Approved: Project Director

Phase: 100% CONSTRUCTION + BID DRAWINGS

Project Title: EHRM-TASS

Location: G.V. (Sonny) Montgomery VAMC

Issue Date: 10/06/2023 | Checked: MTB | Drawn: AM

Project Number: 586-22-703

Building Number: 5

Drawing Number: AD104

VA FORM 08-6231

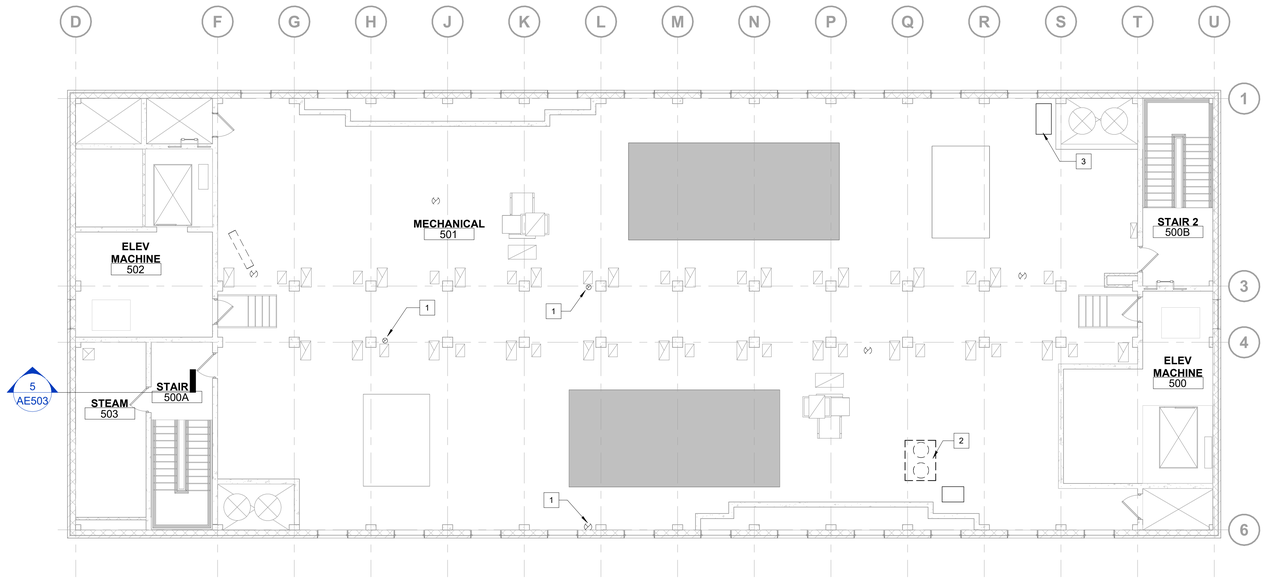

N

1 ARCHITECTURAL FLOOR PLAN - 5TH FLOOR DEMOLITION

1/8" = 1'-0"

0 4' 8' 16'

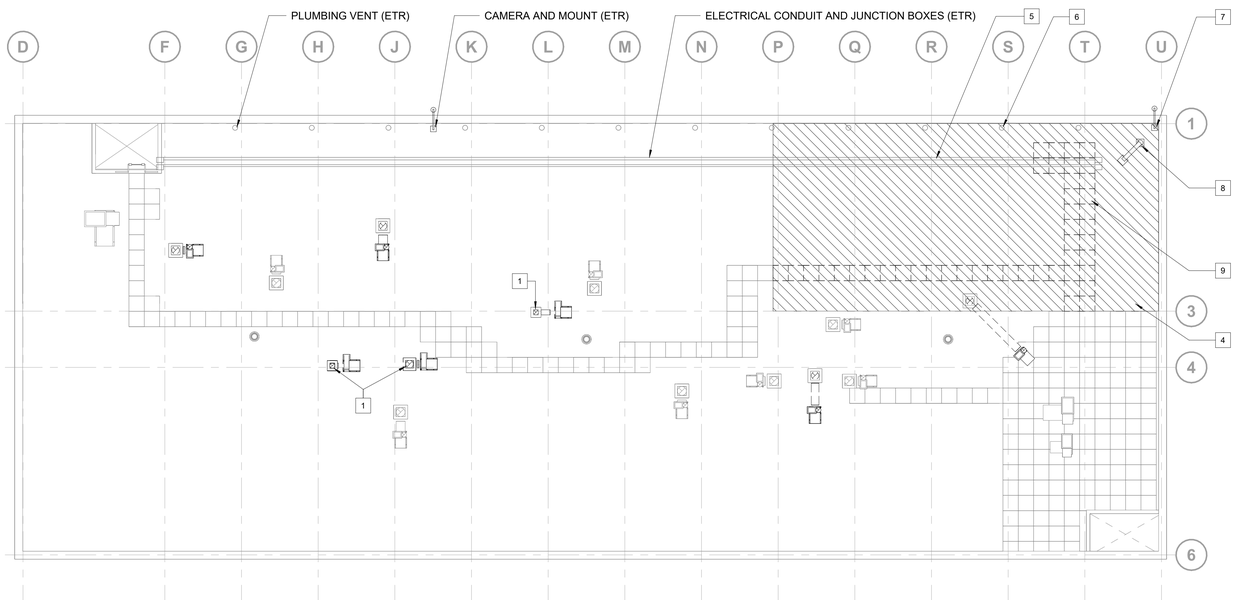

N

2 ARCHITECTURAL FLOOR PLAN - ROOF DEMOLITION

1/8" = 1'-0"

0 4' 8' 16'

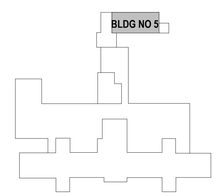

KEYPLAN

GENERAL NOTES

1. REVIEW THIS DRAWING IN CONJUNCTION WITH CORRESPONDING FIRE PROTECTION, PLUMBING, MEDICAL GAS, MECHANICAL, ELECTRICAL AND TECHNOLOGY DRAWINGS FOR FULL SCOPE OF DEMOLITION WORK. COORDINATE EXTENTS OF DEMOLITION WITH NEW PLAN
2. FIRESTOP WALLS AS REQUIRED UPON COMPLETION OF PIPING WORK.
3. ADD / ALTERNATE #1:
   REMOVE ALL EXISTING WALL TILE (4"x4" 48" AFF) FROM CMU WALL IN ROOMS: LOBBY-400 | CORRIDOR 400C | LOBBY 400D. CURRENT SCOPE ONLY REMOVES TILE FROM COLUMN LOCATIONS IN CORRIDOR 400C.

DEMOLITION KEY NOTES

1 EXISTING DUCTWORK AND FLASHING CAP TO BE REMOVED - NEW FLASHING CAP TO BE INSTALLED. REFER TO NEW WORK PLAN FOR DETAILS.

2 MECHANICAL EQUIPMENT TO BE REMOVED - REFER TO MECHANICAL DRAWINGS FOR ADDITIONAL DETAILS.

3 NEW OPENING IN CONCRETE FLOOR.

4 REMOVE EXISTING TPO ROOFING AND COVER BOARD IN OUTLINED AREA - REPLACE ANY INSULATION IF FOUND IN DISREPAIR.

5 IN AREA WHERE ROOFING IS BEING REPLACED TEMPORARILY REMOVE CONDUIT SUPPORT BLOCKS - REPLACE WITH NEW SUPPORTS WHEN ROOFING IS COMPLETE.

6 EXISTING PLUMBING VENT(S) - REMOVE AND REPLACE FLASHING PIPE BOOTS.

7 EXISTING CAMERA AND MOUNT. TEMPORARILY REMOVE CAMERA AND MOUNT WHEN REPLACING THE ROOFING SYSTEM.

8 EXISTING CRANE TO BE REMOVED (SUPPORT POST TO REMAIN) REMOVE FLASHING AND ROOFING AT CRANE BASE.

9 REMOVE EXISTING PAVER STONES. SALVAGE 2X2 PAVERS FOR REUSE. REFER TO THE NEW ROOF PLAN FOR LOCATIONS.

100% CONSTRUCTION + BID DRAWING	10/06/2023
100% CONSTRUCTION + BID DRAWING	09/28/2023
95% CONSTRUCTION DOCUMENTS	09/01/2023
65% DESIGN DEVELOPMENT	7/27/2023
35% SCHEMATIC DESIGN	6/26/2023
Revisions:	Date:

CONSULTANT

ARCHITECT/ENGINEER OF RECORD

BANCROFT ARCHITECTS + ENGINEERS
3300 Dundee Rd.
Northbrook, IL 60062
T: 847.932.9362
www. bancroft-ae.com

VA CONTRACT NO. 36C77623C0052

Bancroft Project No. 22-131

STAMP

LICENSED ARCHITECT
CROTAN D. ZAKARIJA
001.022.337
STATE OF ILLINOIS
10/6/23

Office of Construction and Facilities Management

VA U.S. Department of Veterans Affairs

Drawing Title: ARCHITECTURAL - DEMOLITION PLAN AND ROOF - 5TH FLOOR

Approved: Project Director

Phase: 100% CONSTRUCTION + BID DRAWINGS

Project Title: EHRM-TASS

Location: G.V. (Sonny) Montgomery VAMC

Issue Date: 10/06/2023

Checked: MTB

Drawn: AM

Project Number: 586-22-703

Building Number: 5

Drawing Number: AD105

VA FORM 08-6231

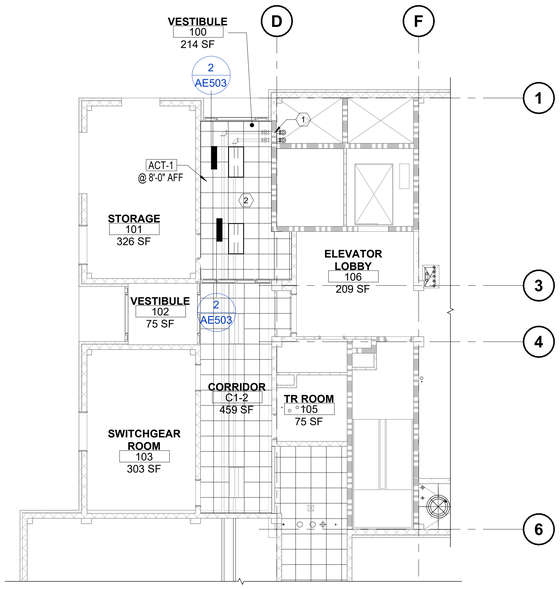

N

1 ARCHITECTURAL CEILING PLAN - 1ST FLOOR

1/8" = 1'-0"

0 4' 8' 16'

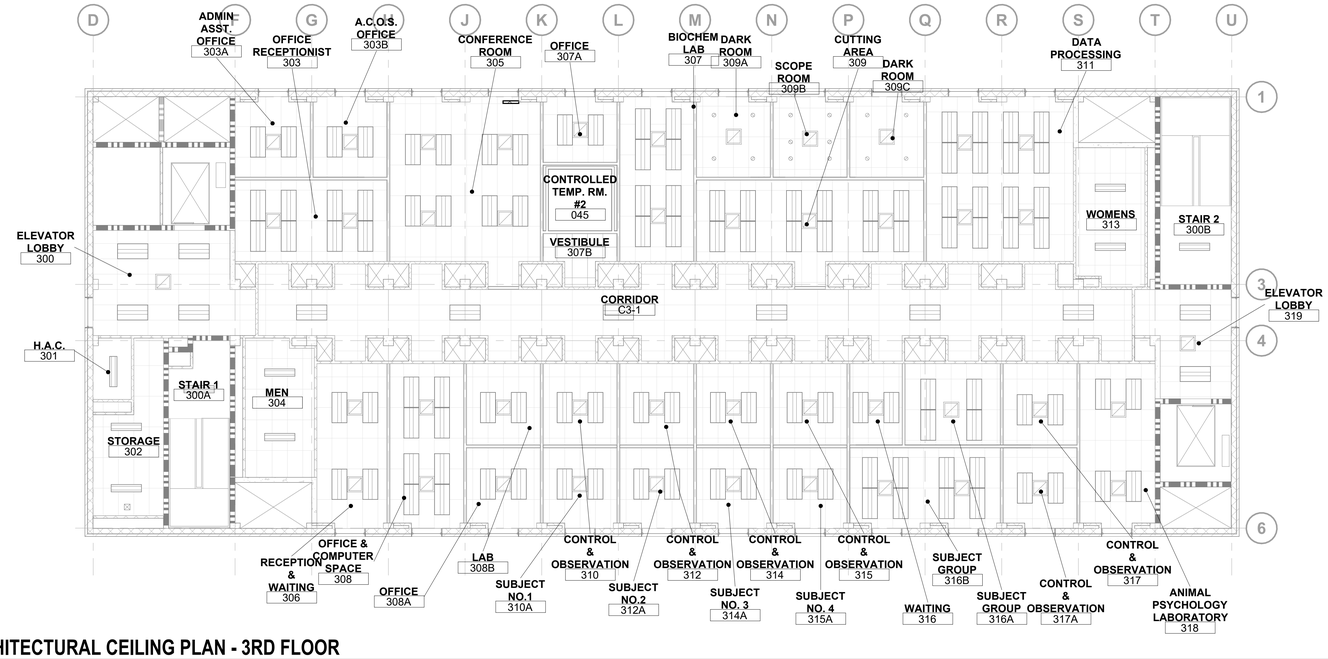

N

2 ARCHITECTURAL CEILING PLAN - 3RD FLOOR

1/8" = 1'-0"

0 4' 8' 16'

GENERAL NOTES

A. REVIEW THIS DRAWING IN CONJUNCTION WITH CORRESPONDING FIRE PROTECTION, PLUMBING, MECHANICAL AND ELECTRICAL DRAWINGS FOR FULL SCOPE OF CONSTRUCTION WORK.

B. ALL DIMENSIONS ARE TO THE FINISHED FACE.

C. ALL CEILINGS ARE 8'-0" ABOVE FINISHED FLOOR UNLESS OTHERWISE NOTED.

D. REFER TO AE501 FOR ALL WALL TYPES AND CONFIGURATIONS.

PLAN AND CEILING KEYNOTES

1 FIRESTOP NEW PIPE PENETRATIONS WITH 2HR UL LISTED WALL PENETRATION SYSTEM

2 NEW ACT CEILING WITH BULKHEADS - REFER TO DETAIL 2/AE503

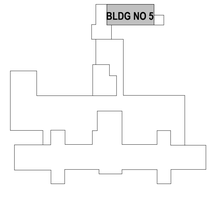

KEYPLAN

100% CONSTRUCTION + BID DRAWING	10/06/2023
100% CONSTRUCTION + BID DRAWING	09/28/2023
95% CONSTRUCTION DOCUMENTS	09/01/2023
35% SCHEMATIC DESIGN	6/26/2023
Revisions:	Date:

CONSULTANT

ARCHITECT/ENGINEER OF RECORD

BANCROFT ARCHITECTS + ENGINEERS
3300 Dundee Rd.
Northbrook, IL 60062
T: 847.932.9362
www.bancroft-ae.com

VA CONTRACT NO. 36C77623C0052

Bancroft Project No. 22-131

STAMP

LICENSED ARCHITECT
CROTAN D. ZAKARIJA
001.022.2287
STATE OF ILLINOIS
10/6/23

Office of Construction and Facilities Management

VA U.S. Department of Veterans Affairs

Drawing Title	Phase	Project Title	Project Number
ARCHITECTURAL - FLOOR PLAN AND CEILING - 3RD FLOOR	100% CONSTRUCTION + BID DRAWINGS	EHRM-TASS	586-22-703
			Building Number: 5
Approved: Project Director		Location: G.V. (Sonny) Montgomery VAMC	Drawing Number
		Issue Date: 10/06/2023 · Checked: MTB · Drawn: AM	AE103

VA FORM 08-6231

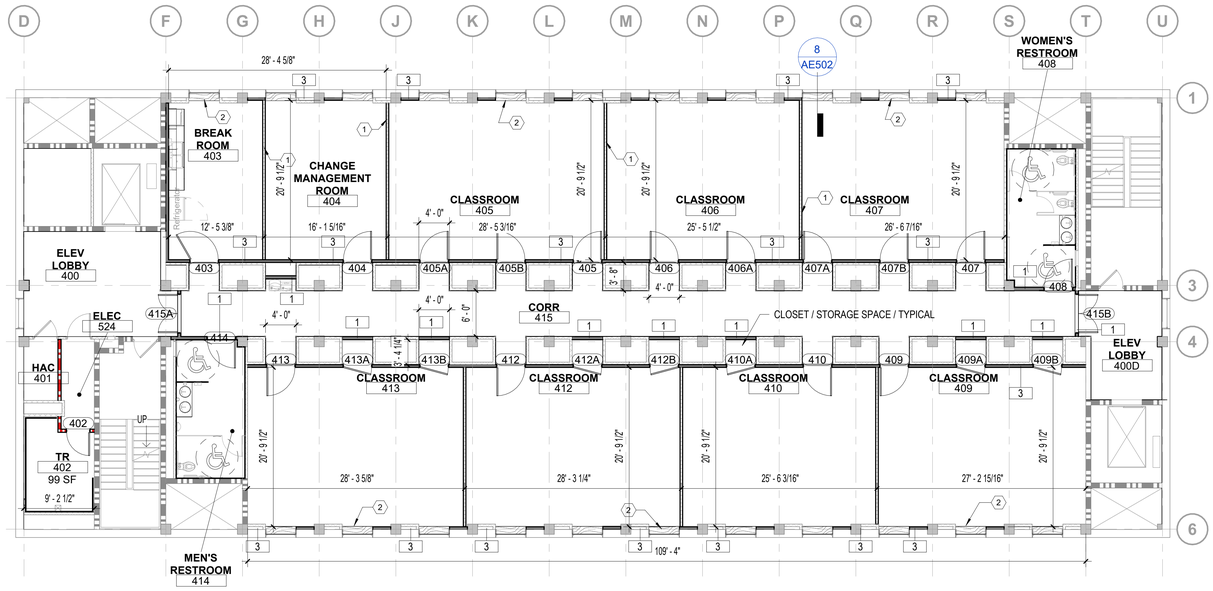

N

1 ARCHITECTURAL FLOOR PLAN - 4TH FLOOR

1/8" = 1'-0"

0 4' 8' 16'

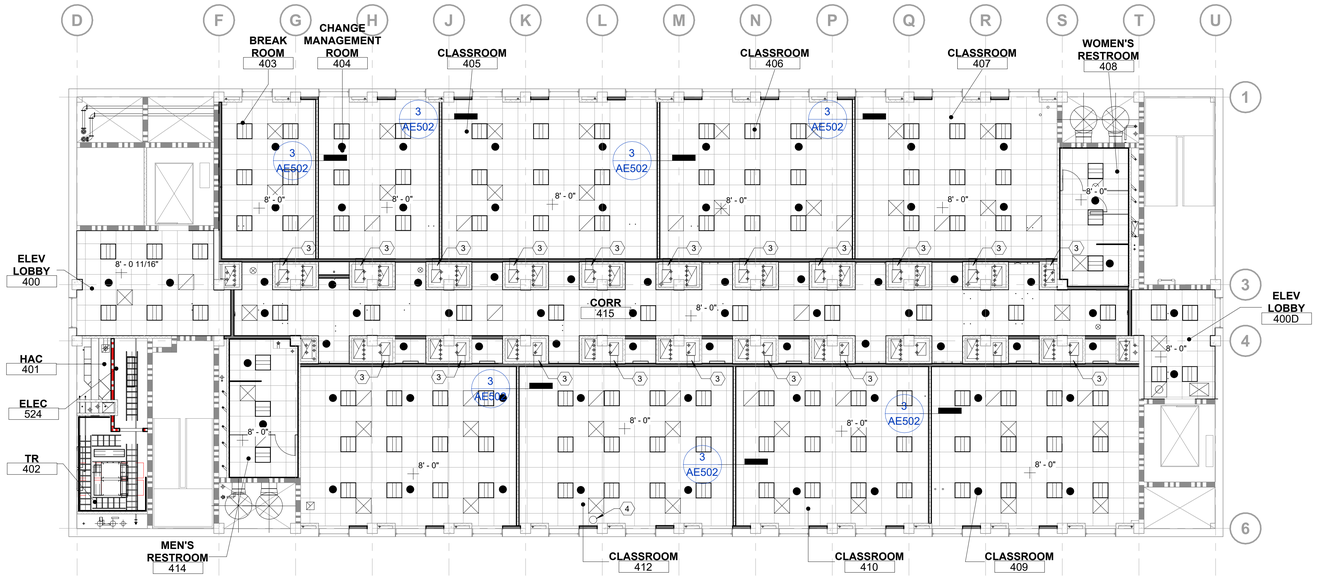

N

2 ARCHITECTURAL CEILING PLAN - 4TH FLOOR

1/8" = 1'-0"

0 4' 8' 16'

GENERAL NOTES

A. REVIEW THIS DRAWING IN CONJUNCTION WITH CORRESPONDING FIRE PROTECTION, PLUMBING, MECHANICAL AND ELECTRICAL DRAWINGS FOR FULL SCOPE OF CONSTRUCTION WORK.

B. ALL DIMENSIONS ARE TO THE FINISHED FACE.

C. ALL CEILINGS ARE 8'-0" ABOVE FINISHED FLOOR UNLESS OTHERWISE NOTED.

D. REFER TO AE501 FOR ALL WALL TYPES AND CONFIGURATIONS.

PLAN AND CEILING KEYNOTES

1 MOVABLE / REMOVABLE PARTITION SYSTEM (SPECIFIC DESIGN AND PRODUCTS TBD)

2 SOLID SURFACE SILL. TYPICAL AT ALL WINDOWS WITHIN PROJECT AREA.

3 PATCH IN 4" MASONRY.

4 PATCH IN HOLES.

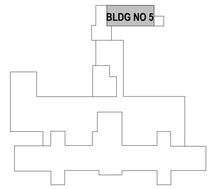

KEYPLAN

100% CONSTRUCTION + BID DRAWING	10/06/2023
100% CONSTRUCTION + BID DRAWING	09/28/2023
95% CONSTRUCTION DOCUMENTS	09/01/2023
65% DESIGN DEVELOPMENT	7/27/2023
35% SCHEMATIC DESIGN	6/26/2023
Revisions:	Date:

CONSULTANT

ARCHITECT/ENGINEER OF RECORD

BANCROFT ARCHITECTS + ENGINEERS
3300 Dundee Rd.
Northbrook, IL 60062
T: 847.952.9362
www.bancroft-ae.com

VA CONTRACT NO. 36C77623C0052 Bancroft Project No. 22-131

STAMP

LICENSED ARCHITECT CROTAN D. ZAKARIJA 001.022.0001 STATE OF ILLINOIS 10/6/23

Office of Construction and Facilities Management

VA U.S. Department of Veterans Affairs

Drawing Title: ARCHITECTURAL - FLOOR PLAN AND CEILING - 4TH FLOOR

Approved: Project Director

Phase: 100% CONSTRUCTION + BID DRAWINGS

Project Title: EHRM-TASS

Location: G.V. (Sonny) Montgomery VAMC

Issue Date: 10/06/2023 | Checked: MTB | Drawn: AM

Project Number: 586-22-703

Building Number: 5

Drawing Number: AE104

VA FORM 08-6231

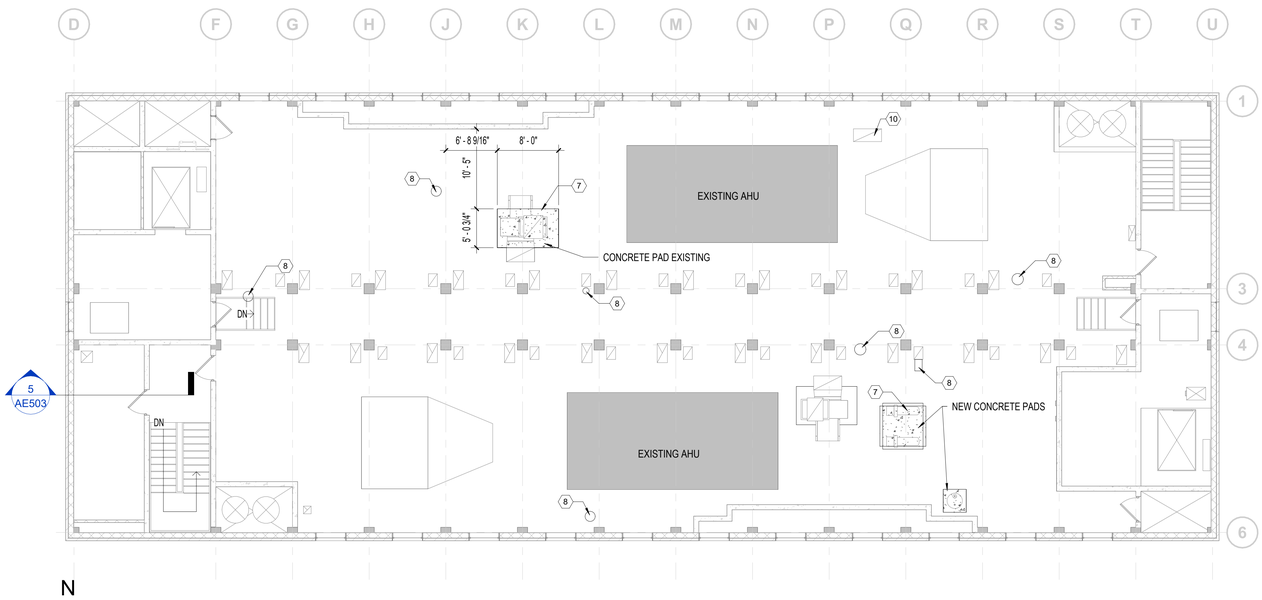

N

1 ARCHITECTURAL FLOOR PLAN - 5TH FLOOR

1/8" = 1'-0"

0 4' 8' 16'

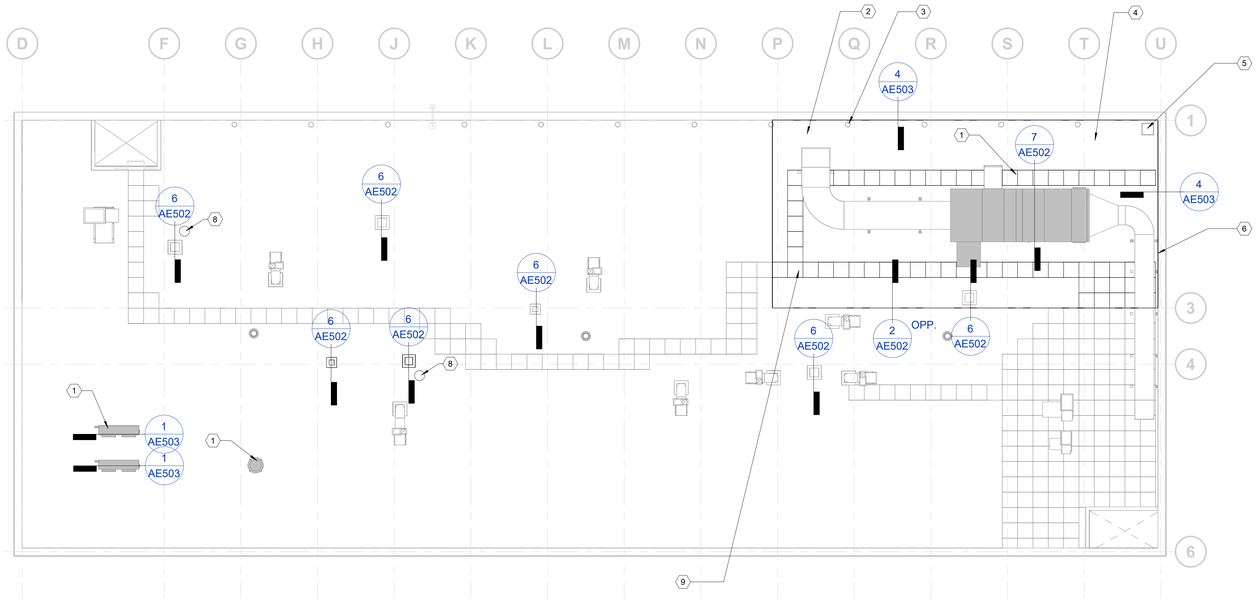

N

2 ARCHITECTURAL FLOOR PLAN - ROOF

1/8" = 1'-0"

0 4' 8' 16'

GENERAL NOTES

A. REVIEW THIS DRAWING IN CONJUNCTION WITH CORRESPONDING FIRE PROTECTION, PLUMBING, MECHANICAL AND ELECTRICAL DRAWINGS FOR FULL SCOPE OF CONSTRUCTION WORK.

B. ALL DIMENSIONS ARE TO THE FINISHED FACE.

C. ALL CEILINGS ARE 8'-0" ABOVE FINISHED FLOOR UNLESS OTHERWISE NOTED.

D. REFER TO AE501 FOR ALL WALL TYPES AND CONFIGURATIONS.

PLAN AND ROOF KEYNOTES

1 NEW AHU AND EQUIPMENT (REFER TO MECHANICAL) INSTALL NEW SUPPORT RAILS FOR EQUIPMENT. FLASH CONNECTIONS INTO EXISTING ROOF MEMBRANE.

2 IN AREA WHERE ROOFING IS BEING REPLACED TEMPORARILY REMOVE CONDUIT SUPPORT BLOCKS - REPLACE WITH NEW SUPPORTS WHEN ROOFING IS COMPLETE.

3 INSTALL NEW PIPING BOOTS AT ALL PIPE PENETRATIONS (EXISTING AND NEW).

4 IN AREA WHERE ROOFING IS BEING REPLACED TEMPORARILY REMOVE LIGHTING PROTECTION SUPPORT BLOCKS AND COMPONENTS - RE-INSTALL WHEN ROOFING IS COMPLETE.

5 INSTALL NEW MOUNTING BLOCK (18" X 18" PRESSURE TREATED LUMBER) MECHANICALLY FASTENED TO CONCRETE ROOF DECK. INSTALL NEW ROOFING OVER BLOCKING AND PROVIDE ALUMINUM SHEET METAL CAP. RE-INSTALL CAMERA AND MOUNT.

6 NEW TPO ROOFING SYSTEM INCLUDING 1/4" COVERBOARD - REPLACE 2" INSULATION IF REQUIRED BASED ON CONDITION UPON INSPECTION.

7 NEW 4" CONCRETE MAINTENANCE PAD.

8 PATCH IN HOLES @ CONCRETE FLOOR.

9 REUSE SALVAGED PAVERS IN CONFIGURATION SHOWN: REPLACE AND INSTALL NEW PAVERS TO COMPLETE INSTALL.

10 SAWCUT EXISTING SLAB TO ACCOMODATE INSTALLATION OF NEW SUPPLY AND RETURN DUCTS. FIRESTOP AS REQUIRED. PATCH AND REPAIR SLAB AS REQUIRED UPON COMPLETION. REFER TO MECHANICAL DRAWINGS FOR MORE INFORMATION.

100% CONSTRUCTION + BID DRAWING	10/06/2023
100% CONSTRUCTION + BID DRAWING	09/28/2023
95% CONSTRUCTION DOCUMENTS	09/01/2023
65% DESIGN DEVELOPMENT	7/27/2023
35% SCHEMATIC DESIGN	6/26/2023
Revisions:	Date:

CONSULTANT

ARCHITECT/ENGINEER OF RECORD

BANCROFT ARCHITECTS + ENGINEERS
3300 Dundee Rd.
Northbrook, IL 60062
T: 847.952.9362
www.bancroft-ae.com

VA CONTRACT NO. 36C77623C0052 Bancroft Project No. 22-131

STAMP

LICENSED ARCHITECT CROTAN D. ZAKARIJA 001.022.0001 STATE OF ILLINOIS 10/6/23

Office of Construction and Facilities Management

VA U.S. Department of Veterans Affairs

Drawing Title: ARCHITECTURAL - FLOOR PLAN AND ROOF - 5TH FLOOR

Phase: 100% CONSTRUCTION + BID DRAWINGS

Project Title: EHRM-TASS

Project Number: 586-22-703

Building Number: 5

Approved: Project Director

Location: G.V. (Sonny) Montgomery VAMC

Issue Date: 10/06/2023 Checked: MTB Drawn: AM

Drawing Number: AE105

VA FORM 08-6231

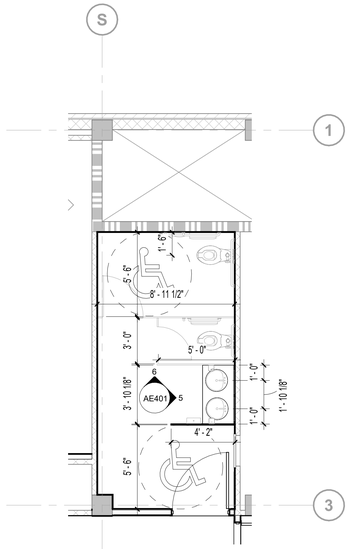

1 ARCHITECTURAL - ENLARGED WOMENS RESTROOM

1/4" = 1'-0"

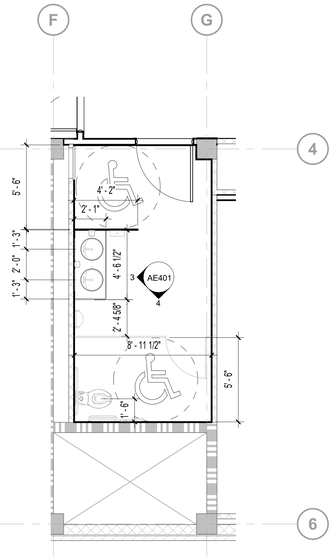

2 ARCHITECTURAL - ENLARGED MENS RESTROOM

1/4" = 1'-0"

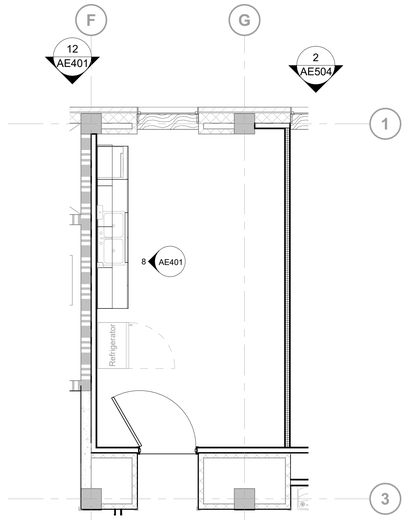

7 ARCHITECTURAL - ENLARGED BREAK ROOM

1/4" = 1'-0"

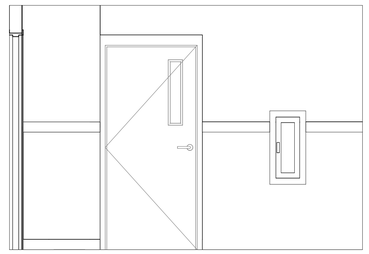

12 FIRE CABINET

1/2" = 1'-0"

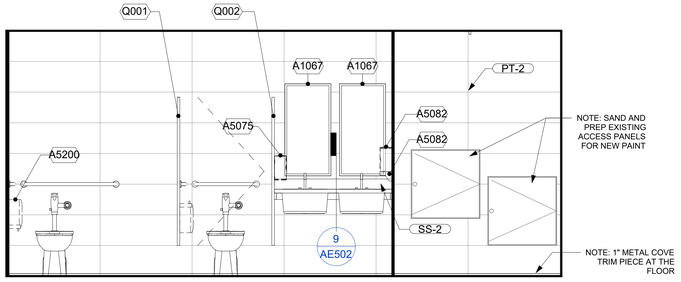

5 WOMENS RESTROOM ELEVATION

1/2" = 1'-0"

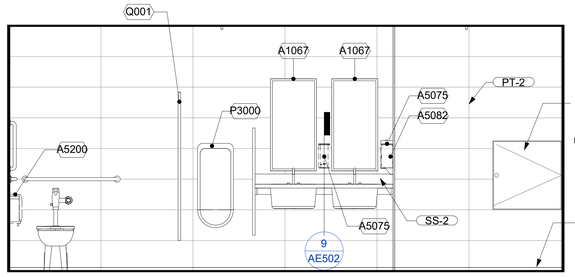

3 MENS RESTROOM ELEVATION

1/2" = 1'-0"

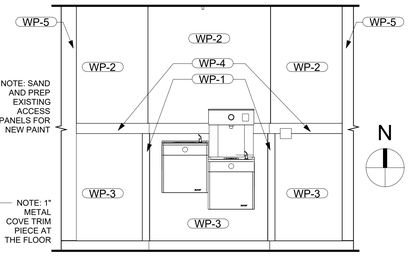

9 DRINKING FOUNTAIN ELEVATION

1/2" = 1'-0"

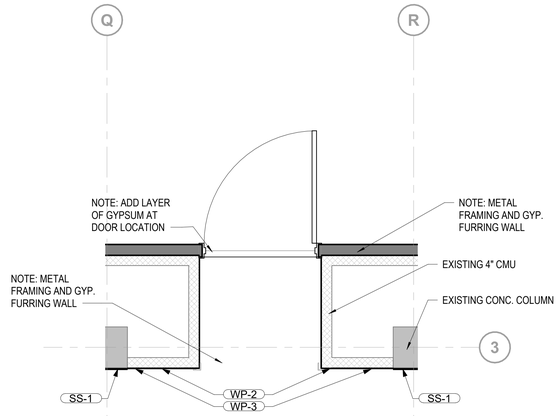

11 ARCHITECTURAL - ENLARGED CLOSET

1/2" = 1'-0"

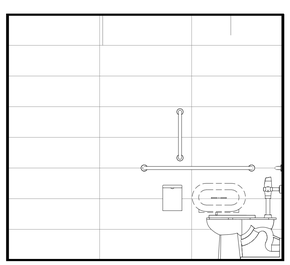

6 WOMENS RESTROOM

1/2" = 1'-0"

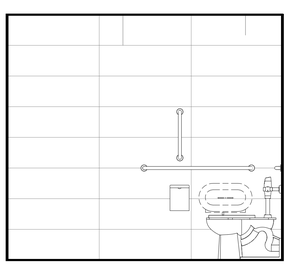

4 MENS RESTROOM

1/2" = 1'-0"

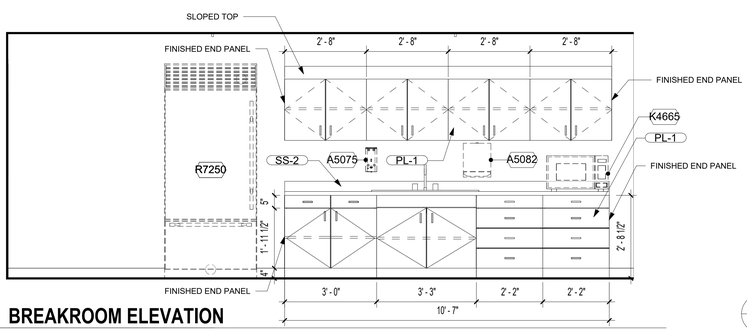

8 BREAKROOM ELEVATION

1/2" = 1'-0"

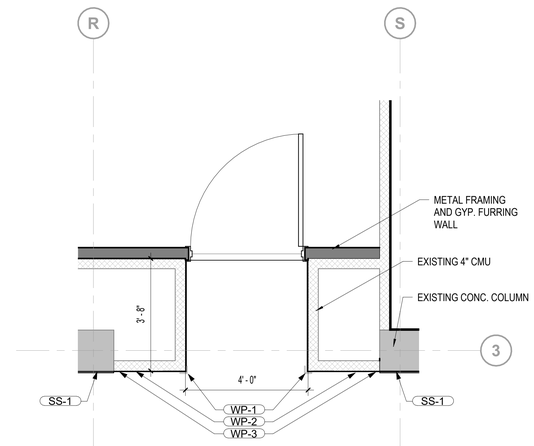

10 ARCHITECTURAL - ENLARGED DOOR

1/2" = 1'-0"

100% CONSTRUCTION + BID DRAWING	10/06/2023
100% CONSTRUCTION + BID DRAWING	09/28/2023
95% CONSTRUCTION DOCUMENTS	09/01/2023
65% DESIGN DEVELOPMENT	7/27/2023
Revisions:	Date:

CONSULTANT

ARCHITECT/ENGINEER OF RECORD

BANCROFT ARCHITECTS + ENGINEERS
3300 Dundee Rd.
Northbrook, IL 60062
T: 847.952.9362
www.bancroft-ae.com
VA CONTRACT NO. 36C77623C0052
Bancroft Project No. 22-131

STAMP

LICENSED ARCHITECT CROTAN D. ZAKARIJA 001-022357 STATE OF ILLINOIS 10/6/23

Office of Construction and Facilities Management

VA U.S. Department of Veterans Affairs

Drawing Title: ARCHITECTURAL - ENLARGED ROOMS

Approved: Project Director

Phase: 100% CONSTRUCTION + BID DRAWINGS

Project Title: EHRM-TASS

Location: G.V. (Sonny) Montgomery VAMC

Issue Date: 10/06/2023 | Checked: MTB | Drawn: AM

Project Number: 586-22-703

Building Number: 5

Drawing Number: AE401

VA FORM 08-6231

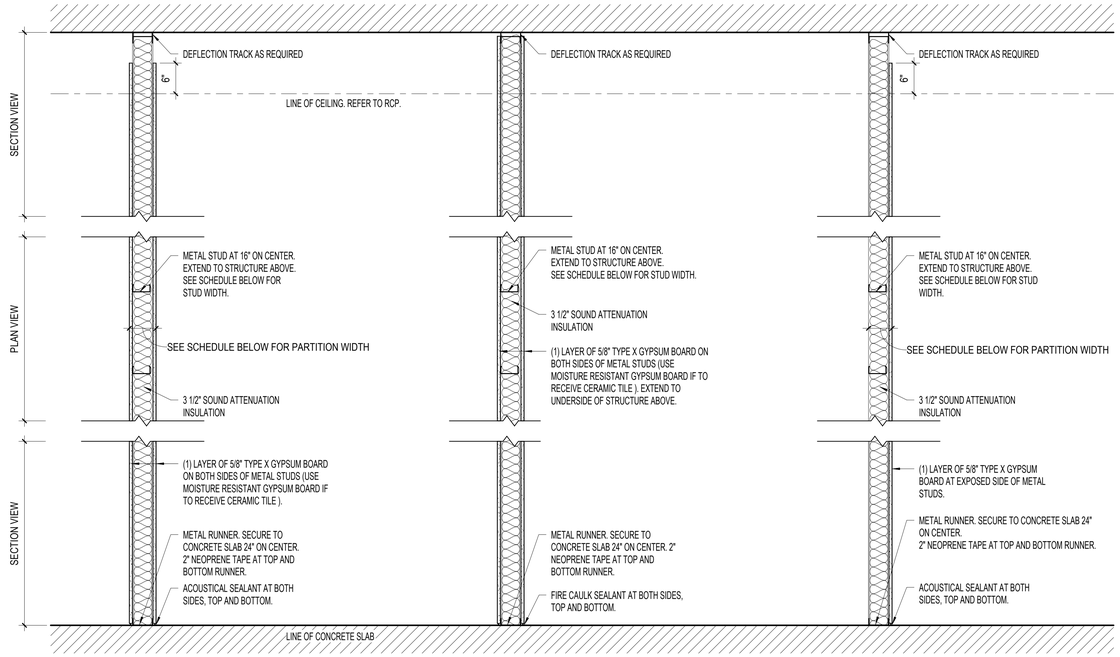

NON-RATED PARTITION

TAG	STUD WIDTH	PARTITION WIDTH	STC RATING	
1	3 5/8"	4 7/8"	--	
1A	6"	7 1/4"	--	

RATED PARTITION

TAG	STUD WIDTH	PARTITION WIDTH	RATING	UL DESIGN NUMBER	STC RATING
2	3 5/8"	4 7/8"	1 HR FIRE	U423	--

FURRING PARTITION

TAG	STUD WIDTH	PARTITION WIDTH		
3	3 5/8"	4 5/8"		
3A	2 1/2"	3 1/8"		

1 PARTITION TYPES

1" = 1'-0"

Revisions:	Date:
100% CONSTRUCTION + BID DRAWING	10/06/2023
100% CONSTRUCTION + BID DRAWING	09/28/2023
95% CONSTRUCTION DOCUMENTS	09/01/2023
65% DESIGN DEVELOPMENT	7/27/2023
SCHEMATIC PLAN - V1	6/13/2023

CONSULTANT

ARCHITECT/ENGINEER OF RECORD

BANCROFT ARCHITECTS + ENGINEERS
3300 Dundee Rd.
Northbrook, IL 60062
T: 847.952.9362
www. bancroft-ae.com
VA CONTRACT NO. 36C77623C0052
Bancroft Project No. 22-131

STAMP

LICENSED ARCHITECT CROTAN D. ZAKARIJA 001.022.3357 STATE OF ILLINOIS 10/6/23

Office of Construction and Facilities Management

VA U.S. Department of Veterans Affairs

Drawing Title: ARCHITECTURAL - PARTITION TYPES

Approved: Project Director

Phase: 100% CONSTRUCTION + BID DRAWINGS

Project Title: EHRM-TASS

Location: G.V. (Sonny) Montgomery VAMC

Issue Date: 10/06/2023 | Checked: MTB | Drawn: AM

Project Number: 586-22-703

Building Number: 5

Drawing Number: AE501

VA FORM 08-6231

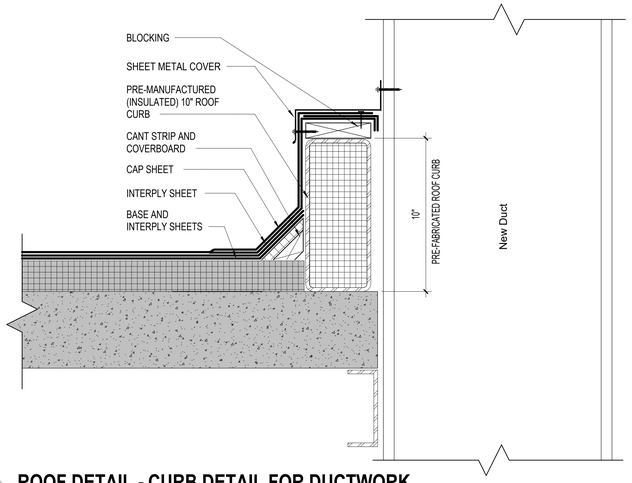

1 ROOF DETAIL - CURB DETAIL FOR DUCTWORK

3" = 1'-0"

0 3" 6" 9"

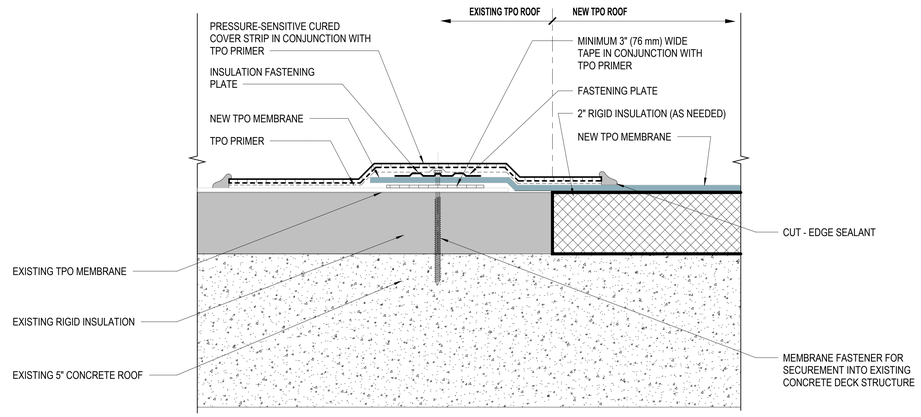

2 ROOF MEMBRANE DETAIL (TYPICAL SEAM)

6" = 1'-0"

0 1" 2" 3" 4"

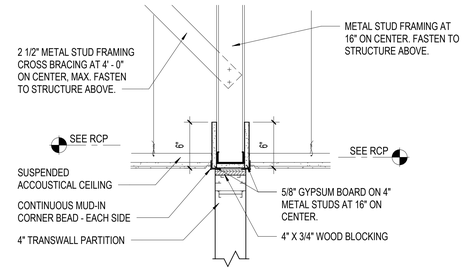

3 CEILING DETAIL - MOVABLE PARTITION CEILING CONNECTION

1 1/2" = 1'-0"

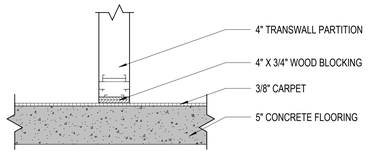

4 FLOOR DETAIL: MOVABLE PARTITION FLOOR CONNECTION

1 1/2" = 1'-0"

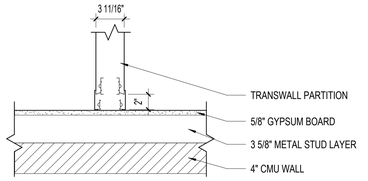

5 WALL DETAIL: MOVABLE PARTITION JAMB CONNECTION

1 1/2" = 1'-0"

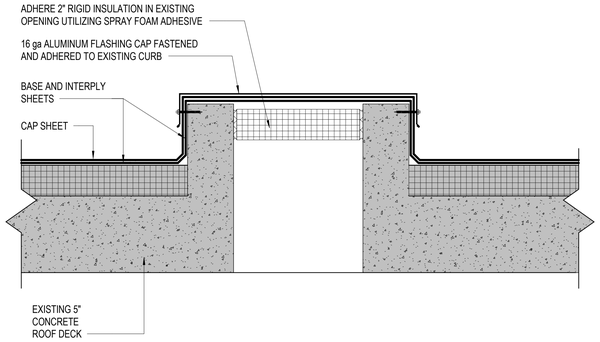

6 ROOF DETAIL - CAP AT EXISTING DUCT

3" = 1'-0"

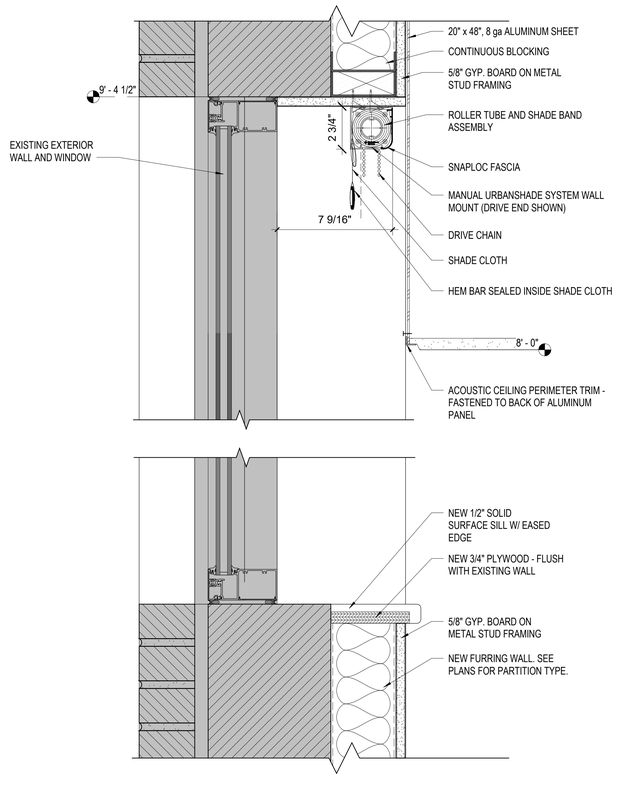

8 CEILING DETAIL - SHADES

3" = 1'-0"

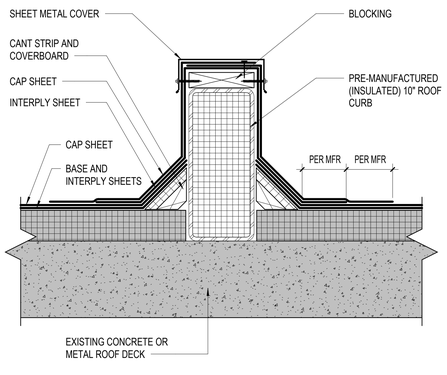

7 ROOF DETAIL - ROOF RAILS SUPPORTING AHU UNIT

3" = 1'-0"

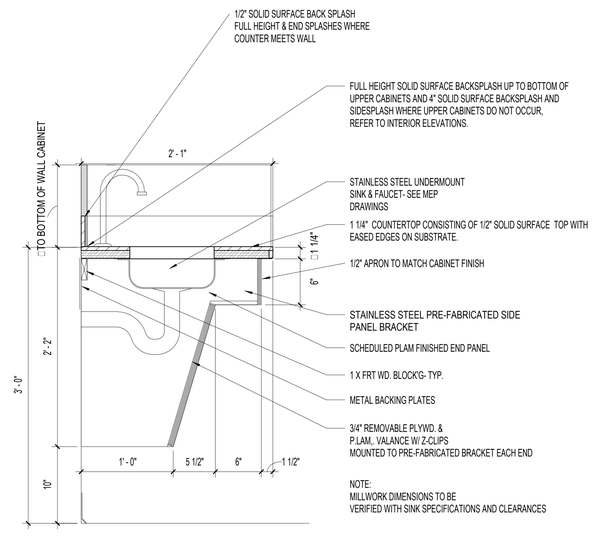

9 SINK CABINET - TYPICAL

1 1/2" = 1'-0"

100% CONSTRUCTION + BID DRAWING	10/06/2023
100% CONSTRUCTION + BID DRAWING	09/28/2023
95% CONSTRUCTION DOCUMENTS	09/01/2023
Revisions:	Date:

CONSULTANT

ARCHITECT/ENGINEER OF RECORD

BANCROFT ARCHITECTS + ENGINEERS
3300 Dundee Rd.
Northbrook, IL 60062
T: 847.932.9362
www. bancroft-ae.com
VA CONTRACT NO. 36C77623C0052
Bancroft Project No. 22-131

STAMP

LICENSED ARCHITECT CROTAN D. ZAKARIA 001102338 STATE OF ILLINOIS 10/6/23

Office of Construction and Facilities Management

VA U.S. Department of Veterans Affairs

Drawing Title: ARCHITECTURAL - DETAILS

Phase: 100% CONSTRUCTION + BID DRAWINGS

Project Title: EHRM-TASS

Project Number: 586-22-703

Building Number: 5

Approved: Project Director

Location: G.V. (Sonny) Montgomery VAMC

Issue Date: 10/06/2023

Checked: Checker

Drawn: AM

Drawing Number: AE502

VA FORM 08-6231

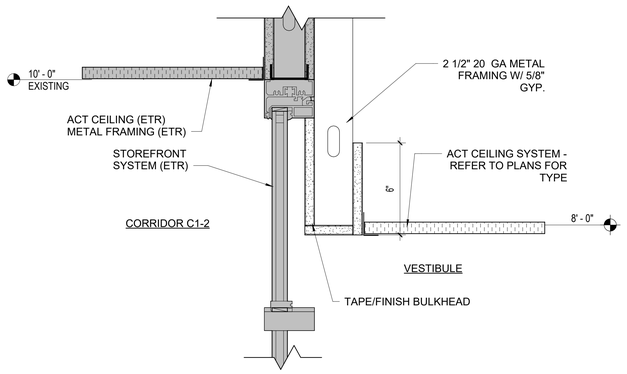

2 1ST FLOOR CEILING DETAIL

3" = 1'-0"

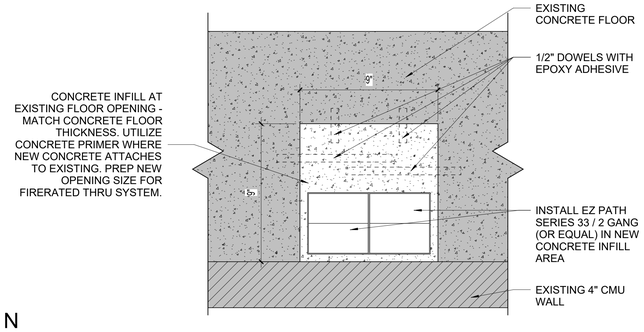

N

3 WALL DETAIL - EZ PATH 4" x 4"

3" = 1'-0"

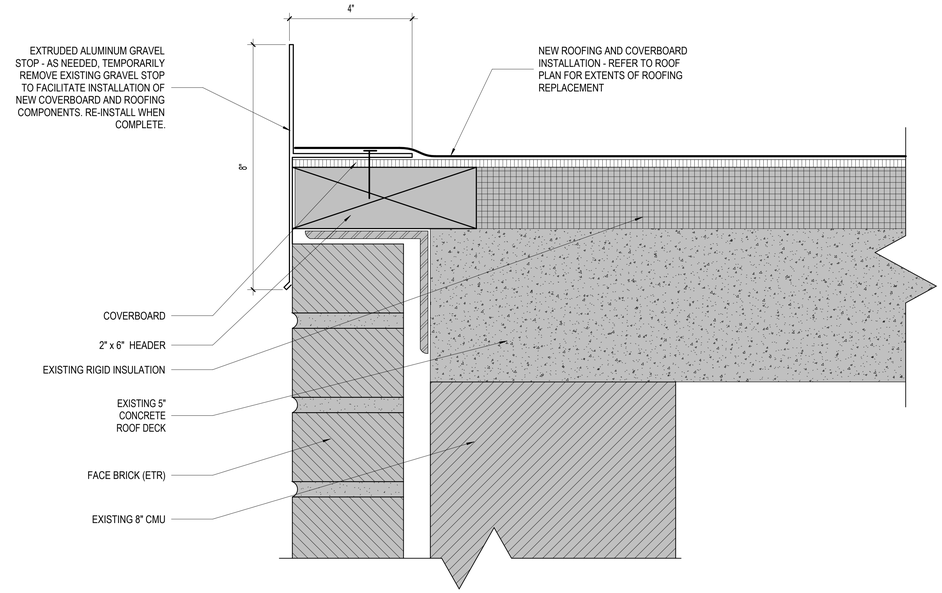

4 ROOF DETAIL - GRAVEL STOP

6" = 1'-0"

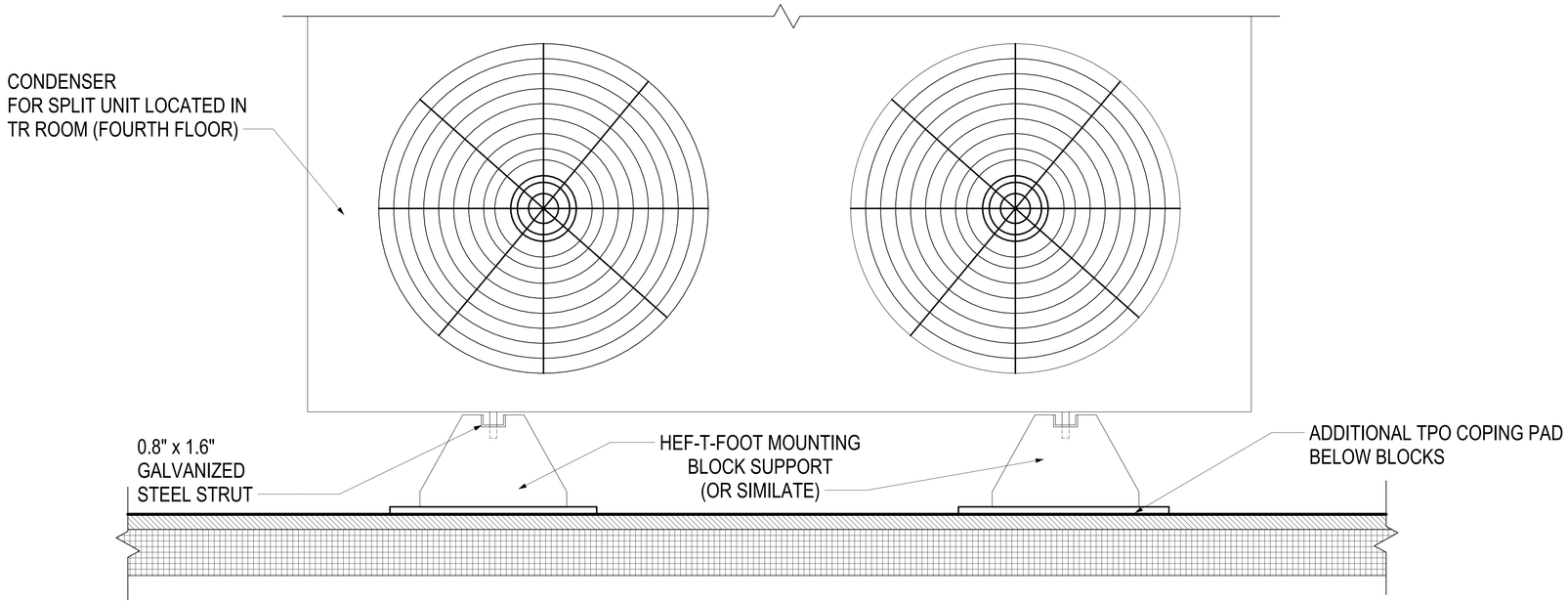

1 ROOF DETAIL - EQUIPMENT SUPPORT

3" = 1'-0"

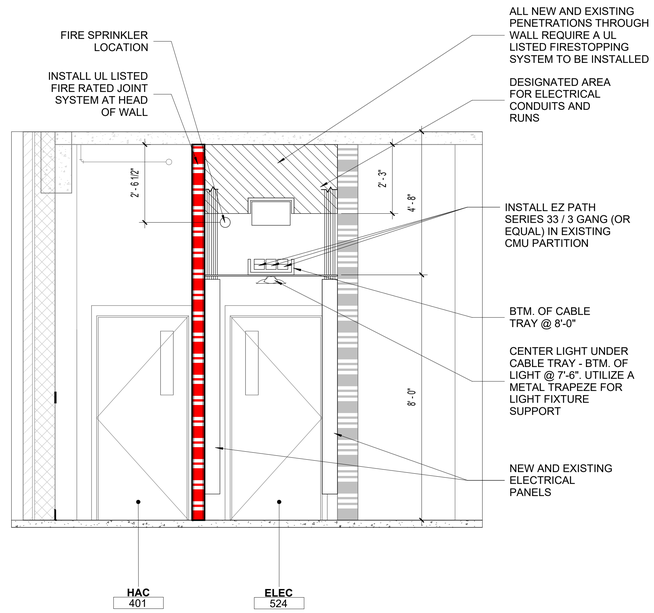

5 ELECTRICAL ROOM SECTION

1/2" = 1'-0"

100% CONSTRUCTION + BID DRAWING	10/06/2023
100% CONSTRUCTION + BID DRAWING	09/28/2023
95% CONSTRUCTION DOCUMENTS	09/01/2023
Revisions:	Date:

CONSULTANT

ARCHITECT/ENGINEER OF RECORD

BANCROFT ARCHITECTS + ENGINEERS
3300 Dundee Rd.
Northbrook, IL 60062
T: 847.952.9362
www.bancroft-ae.com
VA CONTRACT NO. 36C77623C0052
Bancroft Project No. 22-131

STAMP

LICENSED ARCHITECT
CROTAN D. ZAKARIA
001.022.335
STATE OF ILLINOIS
10/6/23

Office of Construction and Facilities Management

VA U.S. Department of Veterans Affairs

Drawing Title: ARCHITECTURAL - DETAILS

Approved: Project Director

Phase: 100% CONSTRUCTION + BID DRAWINGS

Project Title: EHRM-TASS

Location: G.V. (Sonny) Montgomery VAMC

Issue Date: 10/06/2023

Checked: MTB

Drawn: CB

Project Number: 586-22-703

Building Number: 5

Drawing Number: AE503

VA FORM 08-6231

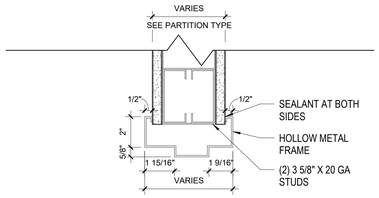

1 TYPICAL HEADER AT STUD WALL

3" = 1'-0"

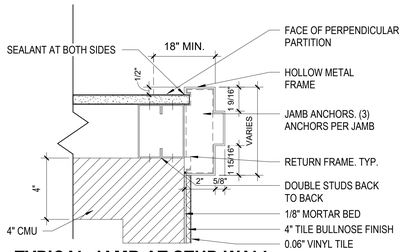

2 TYPICAL JAMB AT STUD WALL

3" = 1'-0"

DOOR AND FRAME TYPE ELEVATIONS

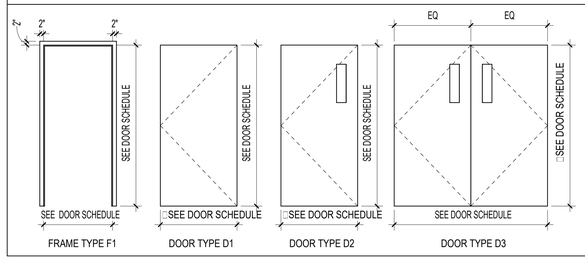

EQUIPMENT SCHEDULE

EQ.NUMBER	DESCRIPTION	QTY	PROVIDED BY	COMMENTS
403				
BREAK ROOM				
A5075	SOAP DISPENSER	1	VV	
A5082	PAPER TOWEL DISPENSER	1	VV	
K4665	MICROWAVE	1	VV	
R7250	REFRIGERATOR	1	VV	
408				
WOMEN'S RESTROOM				
A1067	RESTROOM MIRROR	2	CC	
A5075	SOAP DISPENSER	2	VV	
A5082	PAPER TOWEL DISPENSER	1	VV	
A5109	GRAB BAR HORIZONTAL 36"	1	CC	
A5109.A	GRAB BAR VERTICAL 18"	2	CC	
A5109.B	GRAB BAR HORIZONTAL 42"	1	CC	
A5109.C	GRAB BAR HORIZONTAL 24"	2	CC	
A5200	TOILET PAPER DISPENSER	2	VV	
Q001	CEILING MOUNTED TOILET PARTITION	1	CC	
Q002	CEILING MOUNTED TOILET PARTITION	1	CC	
414				
MEN'S RESTROOM				
A1067	RESTROOM MIRROR	2	CC	
A5075	SOAP DISPENSER	2	VV	
A5082	PAPER TOWEL DISPENSER	1	VV	
A5109	GRAB BAR HORIZONTAL 36"	1	CC	
A5109.A	GRAB BAR VERTICAL 18"	1	CC	
A5109.B	GRAB BAR HORIZONTAL 42"	1	CC	
A5200	TOILET PAPER DISPENSER	1	VV	
P3000	URINAL	1	CC	
Q001	CEILING MOUNTED TOILET PARTITION	1	CC	

EQUIPMENT LABELED WITH 'Q' DO NOT HAVE A JSN NUMBER.

DOOR SCHEDULE

MARK	DOOR SIZE WIDTH	DOOR SIZE HEIGHT	DOOR SIZE THICKNESS	DOOR MATERIAL	DOOR FINISH	DOOR ELEVATION	DOOR GLAZING	FRAME MATERIAL	FRAME ELEVATION	FRAME DETAILS HEAD	FRAME DETAILS JAMB	FRAME DETAILS SILL	FIRE RATING LABEL	HARDWARE SET	NOTES
402	3' - 0"	8' - 0"	1 3/4"	WOOD	ST	D1		HM	F1	1/AE601	2/AE601				
403	3' - 8"	7' - 0"	1 3/4"	WOOD	ST	D2	TEMP.	HM	F1	1/AE601	2/AE601			HW1	
404	3' - 8"	7' - 0"	1 3/4"	WOOD	ST	D2	TEMP.	HM	F1	1/AE601	2/AE601			HW4	
405	3' - 8"	7' - 0"	1 3/4"	WOOD	ST	D2	TEMP.	HM	F1	1/AE601	2/AE601			HW4	
405A	3' - 8"	7' - 0"	1 3/4"	WOOD	ST	D2	TEMP.	HM	F1	1/AE601	2/AE601			HW5	
405B	3' - 8"	7' - 0"	1 3/4"	WOOD	ST	D2	TEMP.	HM	F1	1/AE601	2/AE601			HW5	
406	3' - 8"	7' - 0"	1 3/4"	WOOD	ST	D2	TEMP.	HM	F1	1/AE601	2/AE601			HW4	
406A	3' - 8"	7' - 0"	1 3/4"	WOOD	ST	D2	TEMP.	HM	F1	1/AE601	2/AE601			HW5	
407	3' - 8"	7' - 0"	1 3/4"	WOOD	ST	D2	TEMP.	HM	F1	1/AE601	2/AE601			HW4	
407A	3' - 8"	7' - 0"	1 3/4"	WOOD	ST	D2	TEMP.	HM	F1	1/AE601	2/AE601			HW5	
407B	3' - 8"	7' - 0"	1 3/4"	WOOD	ST	D2	TEMP.	HM	F1	1/AE601	2/AE601			HW5	
408	3' - 8"	7' - 0"	1 3/4"	WOOD	ST	D1		HM	F1	1/AE601	2/AE601			HW1	
409	3' - 8"	7' - 0"	1 3/4"	WOOD	ST	D2	TEMP.	HM	F1	1/AE601	2/AE601			HW4	
409A	3' - 8"	7' - 0"	1 3/4"	WOOD	ST	D1		HM	F1	1/AE601	2/AE601			HW5	
409B	3' - 8"	7' - 0"	1 3/4"	WOOD	ST	D1		HM	F1	1/AE601	2/AE601			HW5	
410	3' - 8"	7' - 0"	1 3/4"	WOOD	ST	D2	TEMP.	HM	F1	1/AE601	2/AE601			HW4	
410A	3' - 8"	7' - 0"	1 3/4"	WOOD	ST	D1		HM	F1	1/AE601	2/AE601			HW5	
412	3' - 8"	7' - 0"	1 3/4"	WOOD	ST	D2	TEMP.	HM	F1	1/AE601	2/AE601			HW4	
412A	3' - 8"	7' - 0"	1 3/4"	WOOD	ST	D1		HM	F1	1/AE601	2/AE601			HW5	
412B	3' - 8"	7' - 0"	1 3/4"	WOOD	ST	D1		HM	F1	1/AE601	2/AE601			HW5	
413	3' - 8"	7' - 0"	1 3/4"	WOOD	ST	D2	TEMP.	HM	F1	1/AE601	2/AE601			HW4	
413A	3' - 8"	7' - 0"	1 3/4"	WOOD	ST	D1		HM	F1	1/AE601	2/AE601			HW5	
413B	3' - 8"	7' - 0"	1 3/4"	WOOD	ST	D1		HM	F1	1/AE601	2/AE601			HW5	
414	3' - 8"	7' - 0"	1 3/4"	WOOD	ST	D1		HM	F1	1/AE601	2/AE601			HW1	
415A	5' - 0"	7' - 0"	1 3/4"	WOOD	ST	D3	TEMP.	HM	F1	1/AE601	2/AE601			SH9	SMOKE RESISTANT DOOR
415B	5' - 0"	7' - 0"	1 3/4"	WOOD	ST	D3	TEMP.	HM	F1	1/AE601	2/AE601			SH9	SMOKE RESISTANT DOOR

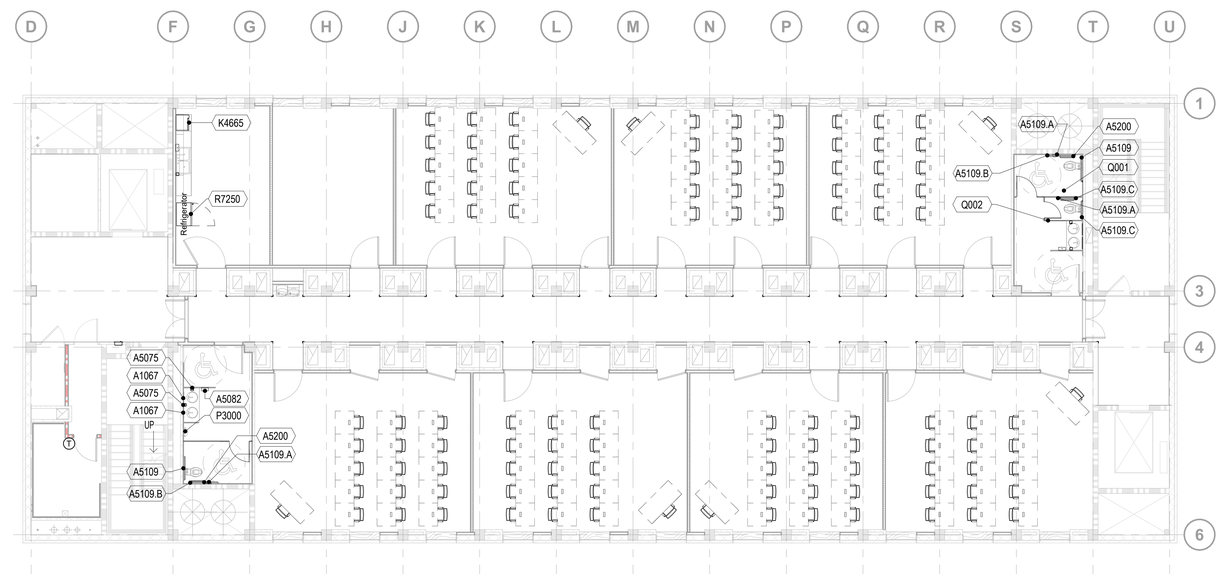

N

3 EQUIPMENT PLAN - 4TH FLOOR

1/8" = 1'-0"

100% CONSTRUCTION + BID DRAWING	10/06/2023
100% CONSTRUCTION + BID DRAWING	09/28/2023
95% CONSTRUCTION DOCUMENTS	09/01/2023
65% DESIGN DEVELOPMENT	7/27/2023
Revisions:	Date:

CONSULTANT

ARCHITECT/ENGINEER OF RECORD

BANCROFT ARCHITECTS + ENGINEERS
3300 Dundee Rd.
Northbrook, IL 60062
T: 847.952.9362
www.bancroft-ae.com
VA CONTRACT NO. 36C77623C0052
Bancroft Project No. 22-131

STAMP

LICENSED ARCHITECT CROTAN D. ZAKARIJA 001-022357 STATE OF ILLINOIS
10/6/23

Office of Construction and Facilities Management

VA U.S. Department of Veterans Affairs

Drawing Title: ARCHITECTURAL - DOOR SCHEDULE, DOOR DETAILS, EQUIPMENT PLAN AND SCHEDULE

Approved: Project Director

Phase: 100% CONSTRUCTION + BID DRAWINGS

Project Title: EHRM-TASS

Location: G.V. (Sonny) Montgomery VAMC

Issue Date: 10/06/2023 | Checked: MTB | Drawn: AM

Project Number: 586-22-703

Building Number: 5

Drawing Number: AE601

VA FORM 08-6231

GENERAL NOTES: REVIEW ELEVATIONS FOR LOCATIONS OF FINISH MATERIALS. SKIM COAT ALL WALLS TO REMAIN WHERE EXISTING FINISHES ARE REMOVED. LEAVE WALLS SMOOTH FOR INSTALLATION OF NEW FINISHES.

ROOM FINISH LEGEND

Key	Material	Manufacturer/Design Basis	Product Properties	Style/Color (Or Approved Equal)	Contact
CEILING					
ACT-1	ACOUTICAL CEILING TILE	ARMSTRONG CEILING TILE	ARMSTRONG ULTIMA BEVELED TUGULAR 24"X24"X3/4" 15/16" PRELUDE SUSPENSION SYSTEM	#1911 WHITE	
P-5	PAINT	XXX or VA Approved Equal	XXX	XXX	
FLOORING					
LVT-1	VINYL FLOOR TILE	ARMSTRONG FLOORING	LVT	BIOME, ST252 MONTANE KILIMANJARO	
LVT-2	VINYL FLOOR TILE	XXX or VA Approved Equal	XXX	XXX	
PT-1	PORCEALAIN TILE	TERRAZZCO	RESIN BASED TERRAZZO TILE	CLASSIC WHITE SERIES 36, CW36	
PTB-1	PORCEALAIN TILE	XXX or VA Approved Equal	XXX	XXX	
VB-1	VINYL BASE	ROPPE	VINYL WALL BASE	PINNACLE - 131 BISQUE	
MILLWORK					
PL-1	PLASTIC LAMINATE	XXX or VA Approved Equal	XXX	XXX	
SS-1	SOLID SURFACE	XXX or VA Approved Equal	XXX	XXX	
WALLS					
P-1	PAINT	SHERWIN WILLIAMS	XXX	SW 7003 TOQUE WHITE	
PT-2	PORCEALAIN TILE	CROSSVILLE	PORCELAIN TILE	AV361 LEVITY OLIVE, 8" X 36" TILES	
SS-2	SOLID SURFACE	XXX or VA Approved Equal	XXX	XXX	
WP-1	CORNER GUARD	XXX or VA Approved Equal	XXX	XXX	
WP-2	WALL PROTECTION	INPRO	PALLADIUM RIGID SHEET WALL PROTECTION	WOVEN HAZE, WVN-04	
WP-3	WALL PROTECTION	INPRO	PALLADIUM RIGID SHEET WALL PROTECTION	STERLING, 0283	
WP-4	WALL PROTECTION	INPRO	PALLADIUM 3D TRIM	BRUSHED SILVER, 5E025	
WP-5	WALL PROTECTION	ARISTECH	ACRYLIC SOLID SURFACE	COZUMEL, 8575, SATIN	

GENERAL NOTES: SEE SHEET A002 FOR SYMBOLS AND ABBREVIATIONS. "N/A" ABBREVIATION BELOW DENOTES EXISTING OR NEW CONCRETE FLOOR TO BE SEALED.

ROOM FINISH SCHEDULE

ROOM NO.	ROOM NAME	FLOOR MATERIAL	BASE MATERIAL	WALLS NORTH SUBSTRATE	WALLS NORTH FINISH	WALLS WEST SUBSTRATE	WALLS WEST FINISH	WALLS SOUTH SUBSTRATE	WALLS SOUTH FINISH	WALLS EAST SUBSTRATE	WALLS EAST FINISH	CEILING TYPE	REMARKS
400	ELEV LOBBY	LVT-1	VB-1	CMU/TILE	P-1	CMU/TILE	P-1	CMU/TILE	P-1	CMU/GYP	P-1	ACT-1	
402	TR	CONC.	VB-1	GYP	P-1	CMU/TILE	P-1	CMU/TILE	P-1	CMU/TILE	P-1	N/A	
401	HAC	CONC.	VB-1	CMU/TILE		CMU/TILE		CMU/TILE		CMU/TILE		ACT-1	
400D	ELEV LOBBY	LVT-1	VB-1	CMU/TILE	P-1	CMU/GYP	P-1	CMU/TILE	P-1	CMU/TILE	P-1	ACT-1	GYP WALLS BY THE DOUBLE DOOR
524	ELEC	CONC.	VB-1	CMU/TILE	P-1	CMU/TILE	P-1	GYP	P-1	CMU/TILE	P-1	ACT-1	
403	BREAK ROOM	LVT-1 / LVT-2	VB-1	GYP	P-1	GYP	P-1	GYP	P-1	N/A	N/A	ACT-1	E WALL IS MADE OF PRE-FABRICATED WALL PANELS
405	CLASSROOM	LVT-2	VB-1	GYP	P-1	N/A	N/A	GYP	P-1	N/A	N/A	ACT-1	E / W WALLS ARE PRE-FABRICATED WALL PANELS
406	CLASSROOM	LVT-2	VB-1	GYP	P-1	N/A	N/A	GYP	P-1	N/A	N/A	ACT-1	E / W WALLS ARE PRE-FABRICATED WALL PANELS
407	CLASSROOM	LVT-2	VB-1	GYP	P-1	N/A	N/A	GYP	P-1	CMU/TILE	P-1	ACT-1	W WALL IS MADE OF PRE-FABRICATED WALL PANELS
408	WOMEN'S RESTROOM	PT-1	PTB-1	CMU/TILE	PT-2	CMU/TILE	PT-2	CMU/TILE	PT-2	CMU/TILE	PT-2	ACT-1	
414	MEN'S RESTROOM	PT-1	PTB-1	CMU/TILE	PT-2	CMU/TILE	PT-2	CMU/TILE	PT-2	CMU/TILE	PT-2	ACT-1	
412	CLASSROOM	LVT-2	VB-1	GYP	P-1	N/A	N/A	GYP	P-1	N/A	N/A	ACT-1	E / W WALLS ARE PRE-FABRICATED WALL PANELS
410	CLASSROOM	LVT-2	VB-1	GYP	P-1	N/A	N/A	GYP	P-1	N/A	N/A	ACT-1	E / W WALLS ARE PRE-FABRICATED WALL PANELS
409	CLASSROOM	LVT-2	VB-1	GYP	P-1	N/A	N/A	GYP	P-1	CMU/TILE	P-1	ACT-1	W WALL IS MADE OF PRE-FABRICATED WALL PANELS
415	CORR	LVT-1	VB-1	CMU/GYP	WP-2 / WP-3	CMU/GYP	WP-1	CMU/GYP	WP-2 / WP-3	CMU/GYP	WP-1	ACT-1	
413	CLASSROOM	LVT-2	VB-1	GYP	P-1	CMU/TILE	P-1	GYP	P-1	N/A	N/A	ACT-1	E WALL IS MADE OF PRE-FABRICATED WALL PANELS
404	CHANGE MANAGEMENT ROOM	LVT-2	VB-1	GYP	P-1	N/A	N/A	GYP	P-1	N/A	N/A	ACT-1	E WALL IS MADE OF PRE-FABRICATED WALL PANELS
409B	CLOSET	LVT-2	VB-1	GYP	P-1	CMU/TILE	P-1	GYP	P-1	CMU/TILE	P-1	ACT-1	
409A	CLOSET	LVT-2	VB-1	GYP	P-1	CMU/TILE	P-1	GYP	P-1	CMU/TILE	P-1	ACT-1	
410A	CLOSET	LVT-2	VB-1	GYP	P-1	CMU/TILE	P-1	GYP	P-1	CMU/TILE	P-1	ACT-1	
412B	CLOSET	LVT-2	VB-1	GYP	P-1	CMU/TILE	P-1	GYP	P-1	CMU/TILE	P-1	ACT-1	
412A	CLOSET	LVT-2	VB-1	GYP	P-1	CMU/TILE	P-1	GYP	P-1	CMU/TILE	P-1	ACT-1	
413A	CLOSET	LVT-2	VB-1	GYP	P-1	CMU/TILE	P-1	GYP	P-1	CMU/TILE	P-1	ACT-1	
413B	CLOSET	LVT-2	VB-1	GYP	P-1	CMU/TILE	P-1	GYP	P-1	CMU/TILE	P-1	ACT-1	

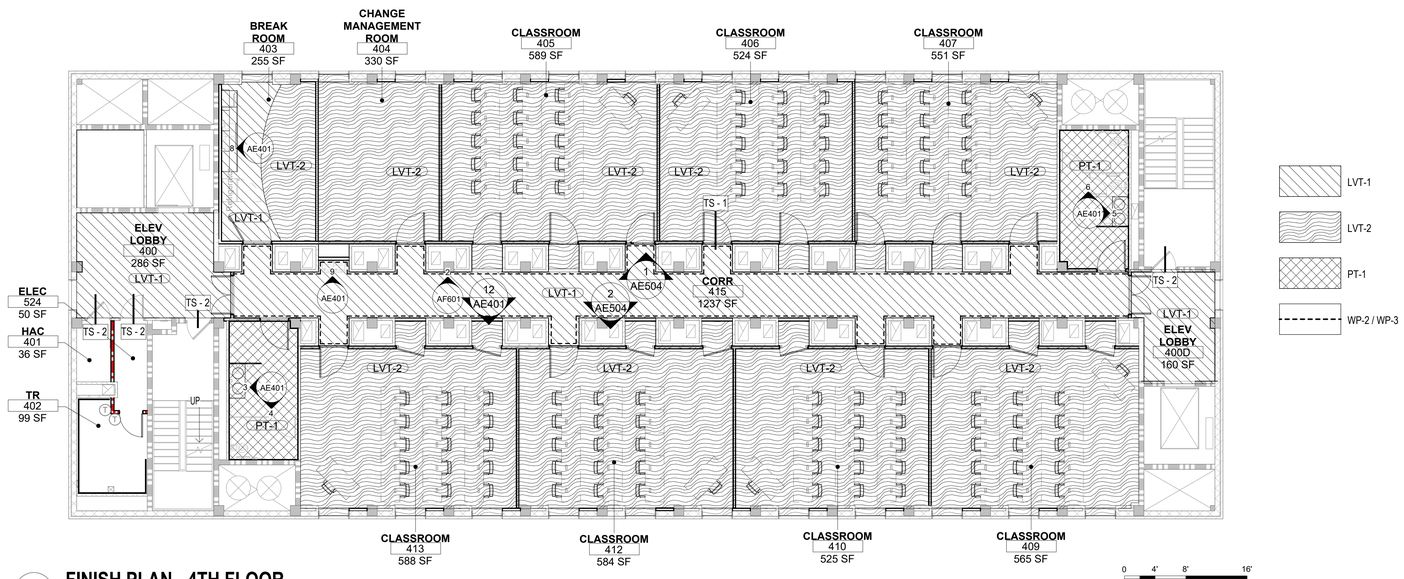

7 FINISH PLAN - 4TH FLOOR

1/8" = 1'-0"

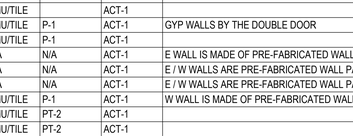

TS-2

5 FLOOR TRANSITIONS

12" = 1'-0"

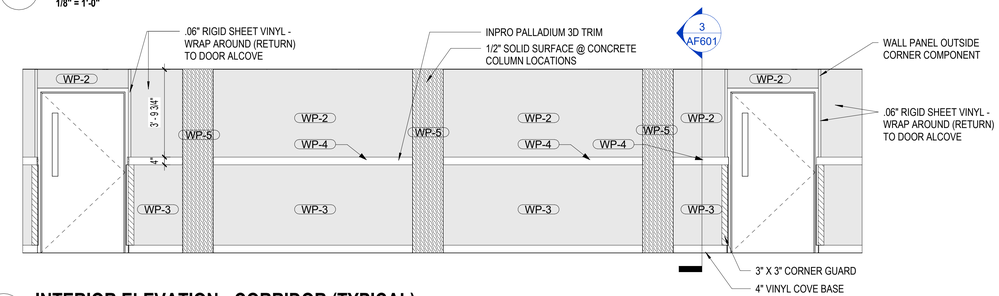

2 INTERIOR ELEVATION - CORRIDOR (TYPICAL)

3/8" = 1'-0"

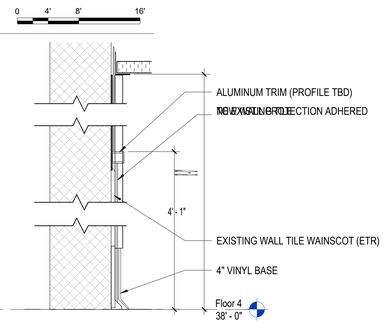

3 SECTION THRU CORRIDOR WALLS

3" = 1'-0"

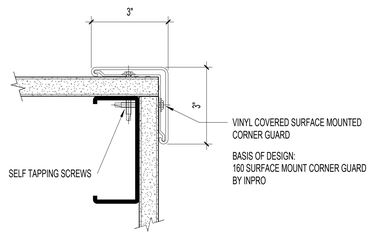

1 DETAIL - CORNER GUARD

6" = 1'-0"

100% CONSTRUCTION + BID DRAWING	10/06/2023
100% CONSTRUCTION + BID DRAWING	09/28/2023
95% CONSTRUCTION DOCUMENTS	09/01/2023
65% DESIGN DEVELOPMENT	7/27/2023
Revisions:	Date:

CONSULTANT

ARCHITECT/ENGINEER OF RECORD

BANCROFT ARCHITECTS + ENGINEERS
3300 Dundee Rd.
Northbrook, IL 60062
T: 847.952.9362
www.bancroft-ae.com
VA CONTRACT NO. 36C77623C0052
Bancroft Project No. 22-131

STAMP

LICENSED ARCHITECT CROTAN D. ZAKARIA 001-022357 STATE OF ILLINOIS

Office of Construction and Facilities Management

VA U.S. Department of Veterans Affairs

Drawing Title: ARCHITECTURAL - FINISH PLAN, SCHEDULES AND DETAILS

Approved: Project Director

Phase: 100% CONSTRUCTION + BID DRAWINGS

Project Title: EHRM-TASS

Project Number: 586-22-703

Building Number: 5

Location: G.V. (Sonny) Montgomery VAMC

Issue Date: 10/06/2023

Checked: MTB

Drawn: AM

Drawing Number: AF601

VA FORM 08-6231

SIZE
3"H X 9"W

SIGN COMPONENTS
REFER TO SPECIFICATIONS

GRAPHIC PROCESS
TACTILE RAISED TEXT AND BRAILLE ON TOP SECTION. SURFACE APPLIED VINYL OR INSERT IN LOWER SIGN SECTION

COLORS
TEXT: REFER TO FINISH PLANS
BACKGROUND: REFER TO FINISH PLANS

TYPOGRAPHY
HELVETICA BOLD
RAISED TACTILE GRADE 2 BRAILLE DOMED

MOUNTING
DOUBLE SIDED FOAM TAPE OR SILASTIC ADHESIVE

INSTALLATION
KNOB SIDE OF DOOR, 60" TO TOP OF SIGN AND 2" OVER FROM DOOR FRAME.

TYPE A - ROOM NUMBER IDENTIFICATION SIGN **IN-03.01**
6" = 1'-0"

SIZE
3"H X 9"W

SIGN COMPONENTS
REFER TO SPECIFICATIONS

GRAPHIC PROCESS
TACTILE RAISED TEXT AND BRAILLE ON TOP SECTION. SURFACE APPLIED VINYL OR INSERT IN LOWER SIGN SECTION

COLORS
TEXT: REFER TO FINISH PLANS
BACKGROUND: REFER TO FINISH PLANS

TYPOGRAPHY
HELVETICA BOLD
RAISED TACTILE GRADE 2 BRAILLE DOMED

MOUNTING
DOUBLE SIDED FOAM TAPE OR SILASTIC ADHESIVE

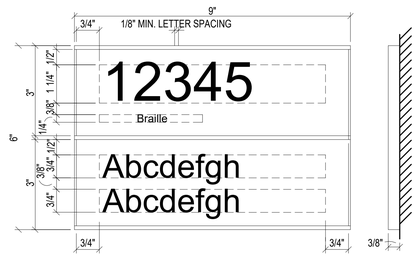

INSTALLATION
KNOB SIDE OF DOOR, 60" TO TOP OF SIGN AND 2" OVER FROM DOOR FRAME.

TYPE B - PRIMARY ROOM IDENTIFICATION SIGN **IN-04.02**
6" = 1'-0"

SIZE
3"H X 9"W

SIGN COMPONENTS
ACRYLIC PLAQUE

GRAPHIC PROCESS
SILK-SCREENED

COLORS
TEXT: WHITE
BACKGROUND: RED

TYPOGRAPHY
HELVETICA BOLD

MOUNTING
DOUBLE SIDED FOAM TAPE OR SILASTIC ADHESIVE

INSTALLATION
CENTERED ON DOOR, 63" TO TOP OF SIGN

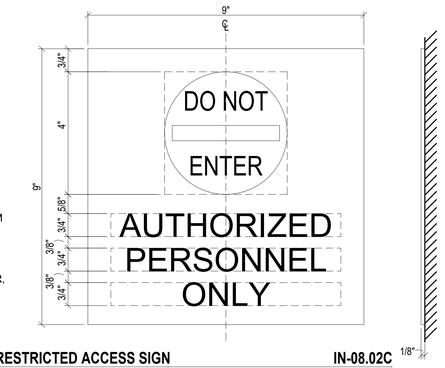

TYPE C - RESTRICTED ACCESS SIGN **IN-08.02C**
6" = 1'-0"

SIZE
9"H X 9"W

SIGN COMPONENTS
ACRYLIC PLAQUE WITH ALUMINUM BRACKET FOR FLAG MOUNTING

GRAPHIC PROCESS
SILK-SCREENED

COLORS
TEXT AND SYMBOL: WHITE
BACKGROUND: RED
BRACKET: ALUMINUM

TYPOGRAPHY
HELVETICA BOLD

MOUNTING
MECHANICAL FASTENERS WITH ANCHORS

INSTALLATION
CENTERED ABOVE FIRE EQUIPMENT CABINET 7'-0" TO BOTTOM OF SIGN; MECHANICALLY FASTENED TO WALL WITH EXPANDABLE ANCHORS AS NEEDED FOR WALL TYPE.

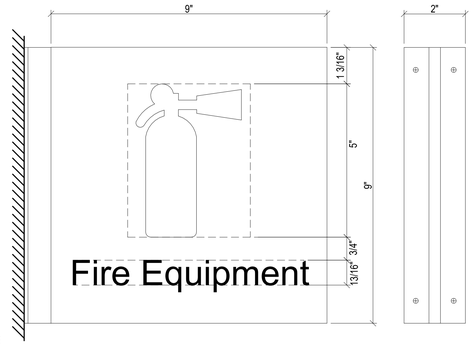

TYPE D - FIRE EQUIPMENT IDENTIFICATION SIGN **IN-01.31**
6" = 1'-0"

SIZE
12.25"H X 9"W

SIGN COMPONENTS
REFER TO SPECIFICATIONS

GRAPHIC PROCESS
TACTILE RAISED TEXT AND BRAILLE ON TOP SECTION. LOWER SECTION TO BE RAISED GRAPHIC TACTILE SYMBOL

COLORS
TEXT: REFER TO FINISH PLANS
BACKGROUND: REFER TO FINISH PLANS

TYPOGRAPHY
HELVETICA BOLD
RAISED TACTILE GRADE 2 BRAILLE DOMED

MOUNTING
DOUBLE SIDED FOAM TAPE OR SILASTIC ADHESIVE

INSTALLATION
ON WALL OR DOOR, 60" TO TOP OF SIGN AND ON DOOR, CENTER

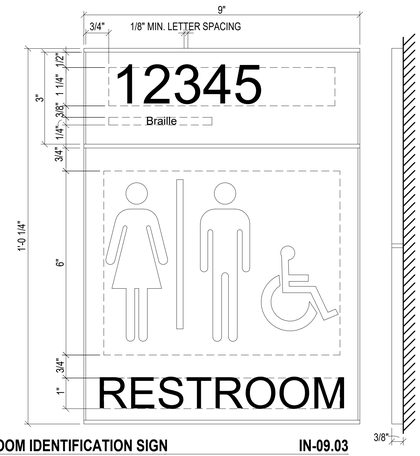

TYPE E - RESTROOM IDENTIFICATION SIGN **IN-09.03**
6" = 1'-0"

SIZE
9"H X 9"W

SIGN COMPONENTS
SIGN IS DIGITAL PRINT, SILKSCREEN OR VINYL APPLIED GRAPHICS

GRAPHIC PROCESS
SILK-SCREENED OR SURFACE APPLIED VINYL

COLORS
TEXT AND SYMBOL:
BACKGROUND:

TYPOGRAPHY
HELVETICA BOLD

MOUNTING
DOUBLE SIDED FOAM TAPE OR SILASTIC ADHESIVE

INSTALLATION
ON WALL OR DOOR, 60" TO TOP OF SIGN AND ON DOOR, CENTER

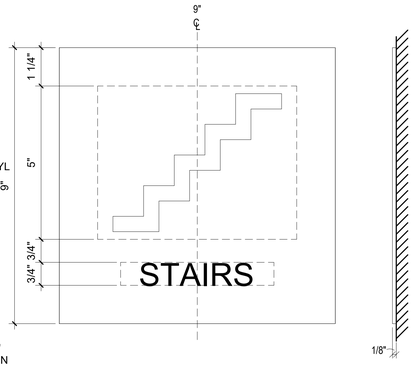

TYPE F - PICTOGRAM AND SYMBOL **IN-09.08D**
6" = 1'-0"

SIZE
9"H X 9"W

SIGN COMPONENTS
TOP SECTION RAISED TEXT AND BRAILLE. MID SECTION CAN BE DIGITAL PRINT OR VINYL APPLIED GRAPHICS. LOWER SECTION MOVING SLIDER WITH GRAPHIC REVEAL

GRAPHIC PROCESS
SLIDER SECTION SURFACE APPLIED VINYL. TEXT BEHIND SLIDER IS SECOND SURFACE

COLORS
TEXT AND SYMBOL:
BACKGROUND:

TYPOGRAPHY
HELVETICA BOLD
GRADE 2 BRAILLE

MOUNTING
DOUBLE SIDED FOAM TAPE, SILASTIC ADHESIVE OR SCREW

INSTALLATION
KNOB SIDE OF DOOR, 60" TO TOP OF SIGN AND 2" OVER FROM DOOR FRAME

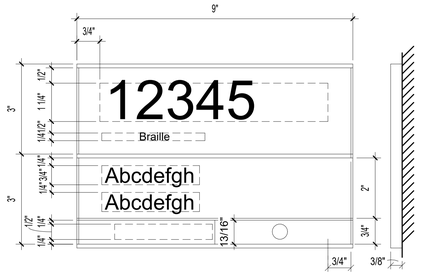

TYPE G - ROOM SIGN WITH INDICATOR **IN-07.02**
6" = 1'-0"

SIZE
9"H X 9"W

SIGN COMPONENTS
SIGN IS DIGITAL PRINT, SILKSCREEN OR VINYL APPLIED GRAPHICS

GRAPHIC PROCESS
SILK-SCREENED OR SURFACE APPLIED VINYL

COLORS
TEXT AND SYMBOL:
BACKGROUND:

TYPOGRAPHY
HELVETICA BOLD

MOUNTING
DOUBLE SIDED FOAM TAPE OR SILASTIC ADHESIVE

INSTALLATION
ON WALL OR DOOR , 60" TO TOP OF SIGN AND ON DOOR, CENTER

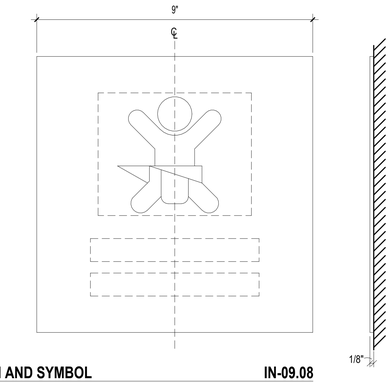

TYPE H - PICTOGRAM AND SYMBOL **IN-09.08**
6" = 1'-0"

SIZE
18"H X 20"W

SIGN COMPONENTS
REFER TO SPECIFICATIONS

GRAPHIC PROCESS
SURFACE APPLIED VINYL

COLORS
TEXT: REFER TO FINISH PLANS
BACKGROUND: REFER TO FINISH PLANS

TYPOGRAPHY
HELVETICA BOLD

MOUNTING
SECURE TO WALL WITH PHYSICAL FASTENERS

INSTALLATION
ON WALL

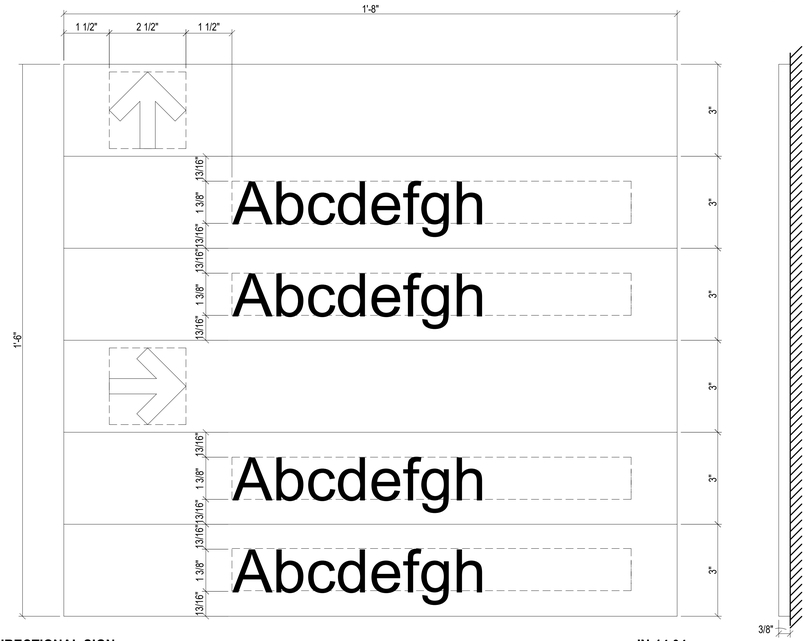

TYPE J - WALL DIRECTIONAL SIGN **IN-14.04**
6" = 1'-0"

SIZE
12"H X 20"W

SIGN COMPONENTS
REFER TO SPECIFICATIONS

GRAPHIC PROCESS
SURFACE APPLIED VINYL

COLORS
TEXT: REFER TO FINISH PLANS
BACKGROUND: REFER TO FINISH PLANS

TYPOGRAPHY
HELVETICA BOLD

MOUNTING
SECURE TO WALL WITH PHYSICAL FASTENERS

INSTALLATION
ON WALL

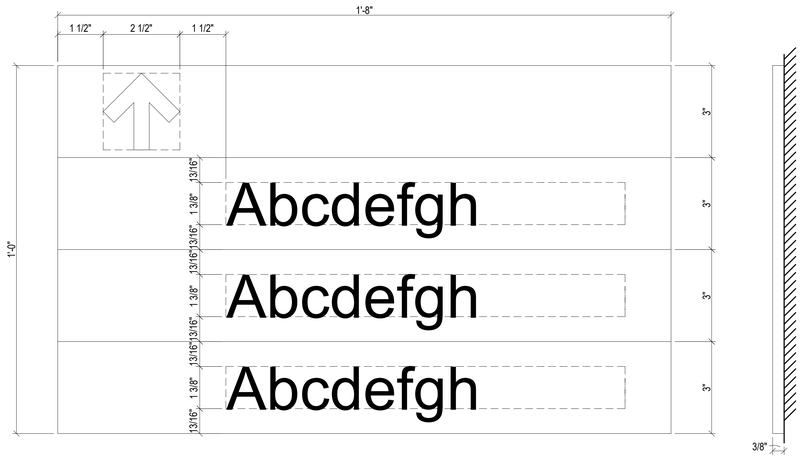

TYPE K - WALL DIRECTIONAL SIGN **IN-14.05**
6" = 1'-0"

Revisions:	Date:
100% CONSTRUCTION + BID DRAWING	10/06/2023
100% CONSTRUCTION + BID DRAWING	09/28/2023

CONSULTANT

ARCHITECT/ENGINEER OF RECORD
BANCROFT ARCHITECTS + ENGINEERS
VA CONTRACT NO. 36C77623C0052
700 Nicholas Blvd, Suite 300
Elk Grove Village, IL 60007
T: 847.952.9362 F: 847.952.9403
www.bancroft-ae.com
Bancroft Project No. 22-131

STAMP

Office of Construction and Facilities Management
U.S. Department of Veterans Affairs

Drawing Title: INTERIORS - SIGNAGE TYPES AND DETAILS
Approved: Project Director
Phase: 100% CONSTRUCTION + BID DRAWINGS
Project Title: EHRM-TASS
Location: G.V. (Sonny) Montgomery VAMC
Issue Date: 10/06/2023
Checked: Checker
Drawn: AM
Project Number: 586-22-703
Building Number: 5
Drawing Number: AW601

VA FORM 08-6231

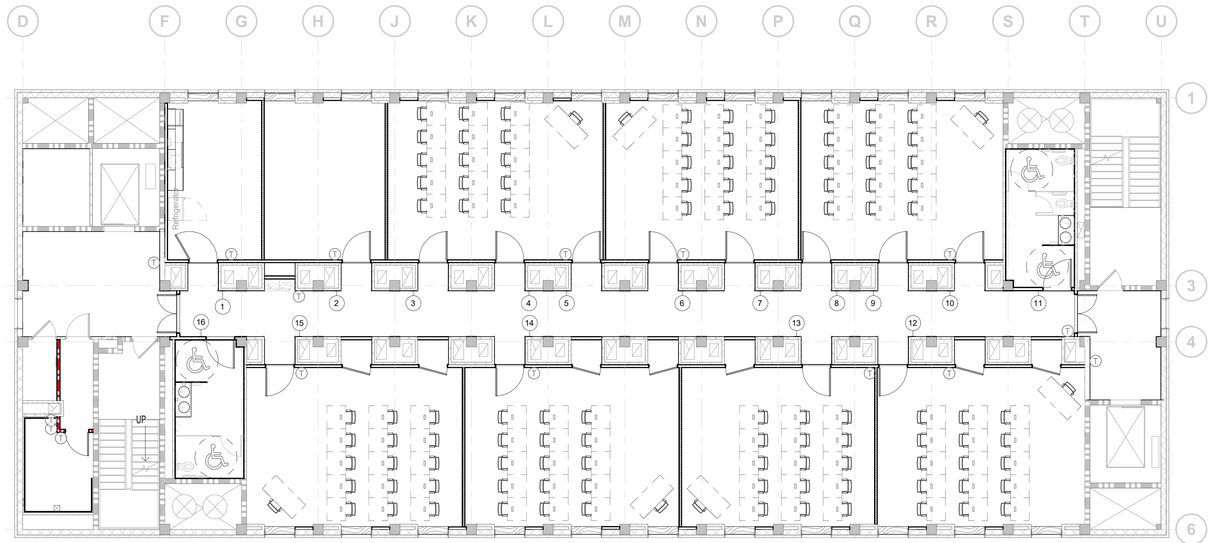

1 SIGNAGE PLAN - 4TH FLOOR

1/8" = 1'-0"

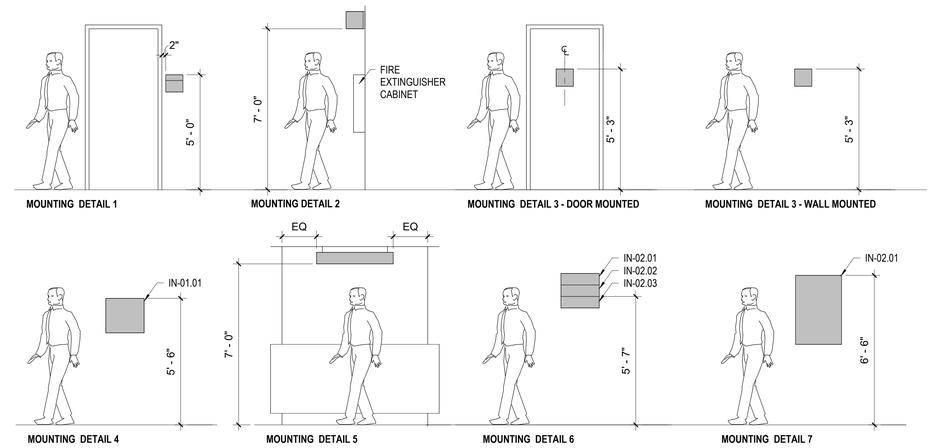

2 TYPICAL MOUNTING HEIGHTS - SIGNAGE

3/8" = 1'-0"

WAYFINDING SCHEDULE

TAG	DESIGNATION	ROOM NUMBER	TEXT	QTY	DETAIL	REMARKS
1	IN-04.02	403	Break Room	1	A	
2	IN-04.02	404	Room	1	A	
3	IN-04.02	405A	Room	1	A	
4	IN-04.02	405B	Room	1	A	
5	IN-04.02	405	Room	1	A	
6	IN-04.02	406	Room	1	A	
7	IN-04.02	406A	Room	1	A	
8	IN-04.02	407A	Room	1	A	
9	IN-04.02	407B	Room	1	A	
10	IN-04.02	407	Room	1	A	
11	IN-09.03	114	Patient Room	1	E	
12	IN-04.02	409	Room	1	A	
13	IN-04.02	410	Room	1	A	
14	IN-04.02	412	Room	1	A	
15	IN-04.02	413	Room	1	A	
16	IN-09.03	413	Room	1	E	

Revisions:	Date:
100% CONSTRUCTION + BID DRAWING	10/06/2023
100% CONSTRUCTION + BID DRAWING	09/28/2023

CONSULTANT

ARCHITECT/ENGINEER OF RECORD

BANCROFT ARCHITECTS + ENGINEERS
VA CONTRACT NO. 36C77623C0052
700 Nicholas Blvd. Suite 300
Elk Grove Village, IL 60007
T:847.952.9362 F:847.952.9403
www. bancroft-ae.com
Bancroft Project No. 22-131

STAMP

Office of Construction and Facilities Management

VA U.S. Department of Veterans Affairs

Drawing Title: INTERIORS - SIGNAGE SCHEDULE AND MOUNTING HEIGHTS

Approved: Project Director

Phase: 100% CONSTRUCTION + BID DRAWINGS

Project Title: EHRM-TASS

Location: G.V. (Sonny) Montgomery VAMC

Issue Date: 10/06/2023

Checked: Checker

Drawn: CB

Project Number: 586-22-703

Building Number: 5

Drawing Number: AW602

VA FORM 08-6231

GENERAL NOTES

A. GENERAL

1. BEFORE EXECUTING ANYTHING HEREIN SHOWN, EXAMINE ACTUAL JOB CONDITIONS. REPORT ANY DISCREPANCY, DIMENSIONAL OR OTHERWISE, BETWEEN MECHANICAL AND STRUCTURAL DRAWINGS AND ANY OTHER ERROR, OMISSION, OR DIFFICULTY AFFECTING THE WORK TO THE ARCHITECT AND TO THE STRUCTURAL ENGINEER FOR REVIEW.
2. THE OWNER OR HIS REPRESENTATIVE RESERVES THE RIGHT TO INSPECT ANY MATERIAL, FABRICATION, OR WORKMANSHIP AT ANY TIME IN FIELD OR SHOP FOR CONFORMANCE TO THE SPECIFICATIONS AND DRAWINGS.
3. ALL DETAILS AND SECTIONS ARE INTENDED TO BE TYPICAL AND SHALL BE CONSTRUED TO APPLY TO ANY SIMILAR SITUATION ELSEWHERE, EXCEPT WHERE A DIFFERENT DETAIL IS SHOWN.

B. DESIGN

1. CODES, SPECIFICATIONS AND STANDARDS (LATEST EDITIONS)
   A. ALL DESIGN AND CONSTRUCTION SHALL CONFORM TO THE INTERNATIONAL BUILDING CODE (2021)
   B. ALL CONSTRUCTION SHALL COMPLY WITH THE PROVISIONS OF THE FOLLOWING CODES, SPECIFICATIONS AND STANDARDS, EXCEPT WHERE NOTED TO THE CONTRARY ON DRAWINGS AND SPECIFICATIONS OR WHERE MORE STRINGENT REQUIREMENTS ARE SPECIFIED OR SHOWN:

MCIB	"SPECIFICATIONS FOR CONCRETE WORK"
ACI 117	"STANDARD SPECIFICATIONS FOR TOLERANCE FOR CONCRETE CONSTRUCTION AND MATERIALS"
ACI 301	"SPECIFICATIONS FOR STRUCTURAL CONCRETE FOR BUILDINGS"
ACI 318	"BUILDING CODE REQUIREMENTS FOR REINFORCED CONCRETE"
ASCE 7-16	"MINIMUM DESIGN LOADS FOR BUILDINGS AND OTHER STRUCTURES"
AISC	"LOAD AND RESISTANCE FACTOR DESIGN (LRFD) SPECIFICATION FOR STRUCTURAL STEEL BUILDINGS"

C. CONSTRUCTION

1. PROTECT EXISTING BUILDING AS REQUIRED UNTIL ALL NEW CONSTRUCTION IS COMPLETE.
2. VERIFY ALL DIMENSIONS OF OR TO EXISTING CONSTRUCTION. ANY VARIATION FROM THAT SHOWN ON PLANS SHALL BE BROUGHT TO THE ATTENTION OF THE ARCHITECT/ENGINEER BEFORE PROCEEDING.
3. HAUL OFF AND PROPERLY DISPOSE OF ALL MATERIAL DEMOLISHED FROM THE SITE UNLESS SPECIFICALLY DIRECTED OTHERWISE BY THE OWNER.
4. CUT OPENINGS IN EXISTING CONCRETE SLABS AND WALLS WITH A POWER SAW TO PREVENT VIBRATION AND DAMAGE OF SURROUNDING STRUCTURE.
5. CORE DRILL CORNERS OR OPENINGS IN EXISTING CONCRETE SLABS AND WALLS PRIOR TO SAW CUTTING. SIZE OF CORE SHALL BE SUFFICIENT TO PREVENT SAW OVERRUN.

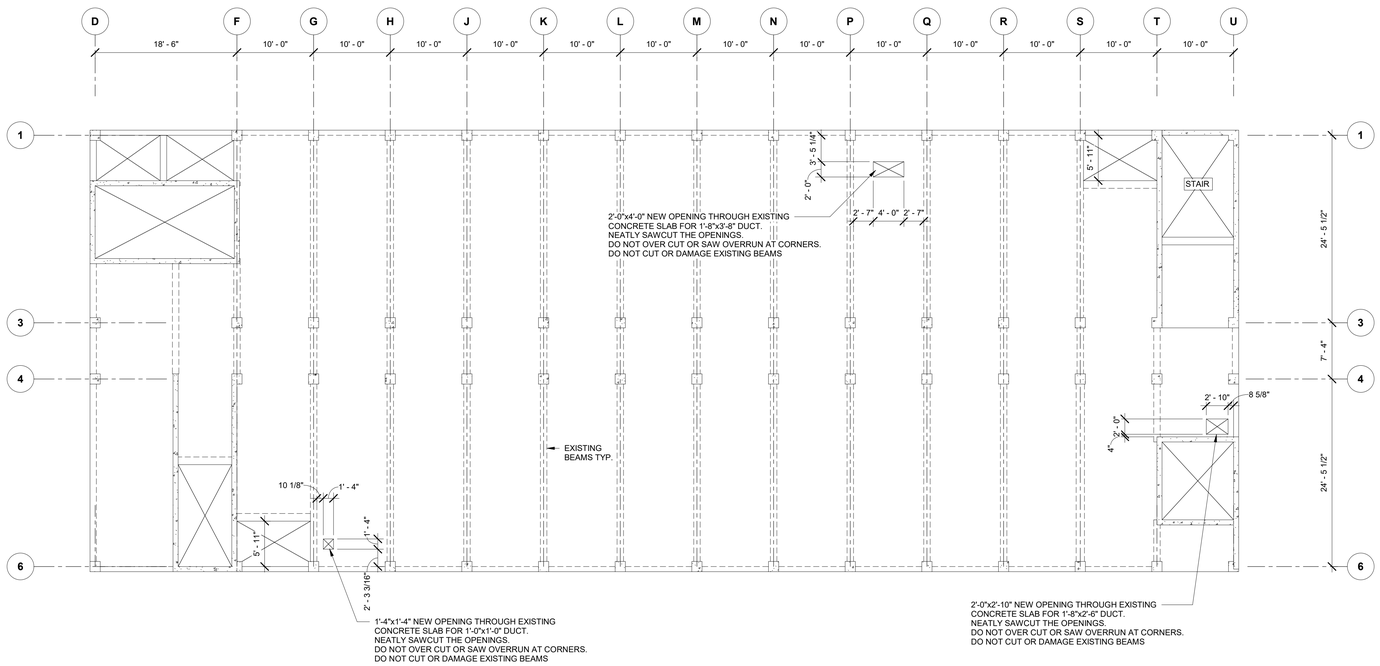

N

1 STRUCTURAL - FLOOR PLAN 5TH FLOOR
1/8" = 1'-0"

REVIEW ONLY - NOT FOR CONSTRUCTION

100% CONSTRUCTION + BID DRAWINGS	10/06/2023
100% CONSTRUCTION + BID DRAWINGS	09/28/2023
95% CONSTRUCTION DOCUMENTS	09/01/2023
Revisions:	Date:

CONSULTANT

ARCHITECT/ENGINEER OF RECORD

BANCROFT ARCHITECTS + ENGINEERS
3300 Dundee Rd.
Northbrook, IL 60062
T: 847.952.9362
www.bancroft-ae.com
VA CONTRACT NO.36C77623C0052
Bancroft Project No. 22-131

STAMP

STATE OF MISSOURI
KRISHNA G. SAHA
NUMBER PE-23092
PROFESSIONAL ENGINEER
10/26/2023

Office of Construction and Facilities Management

VA U.S. Department of Veterans Affairs

Drawing Title: STRUCTURAL - FLOOR PLAN 5TH FLOOR	Phase: 100% CONSTRUCTION + BID DRAWING	Project Title: EHRM-TASS	Project Number: 586-22-703
Approved: Project Director			Building Number: 5
		Location: G.V. (Sonny) Montgomery VAMC	Drawing Number: S105
		Issue Date: 10/06/2023 · Checked: KGS · Drawn: GEB	

VA FORM 08-6231

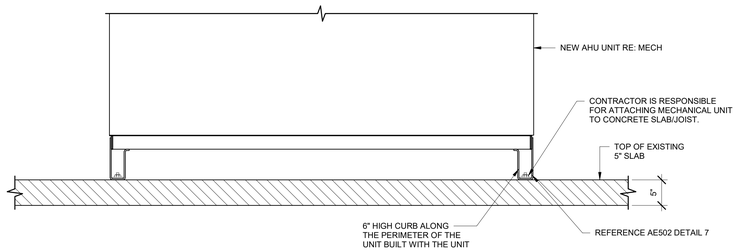

2 AHU UNIT SUPPORT
1" = 1'-0"

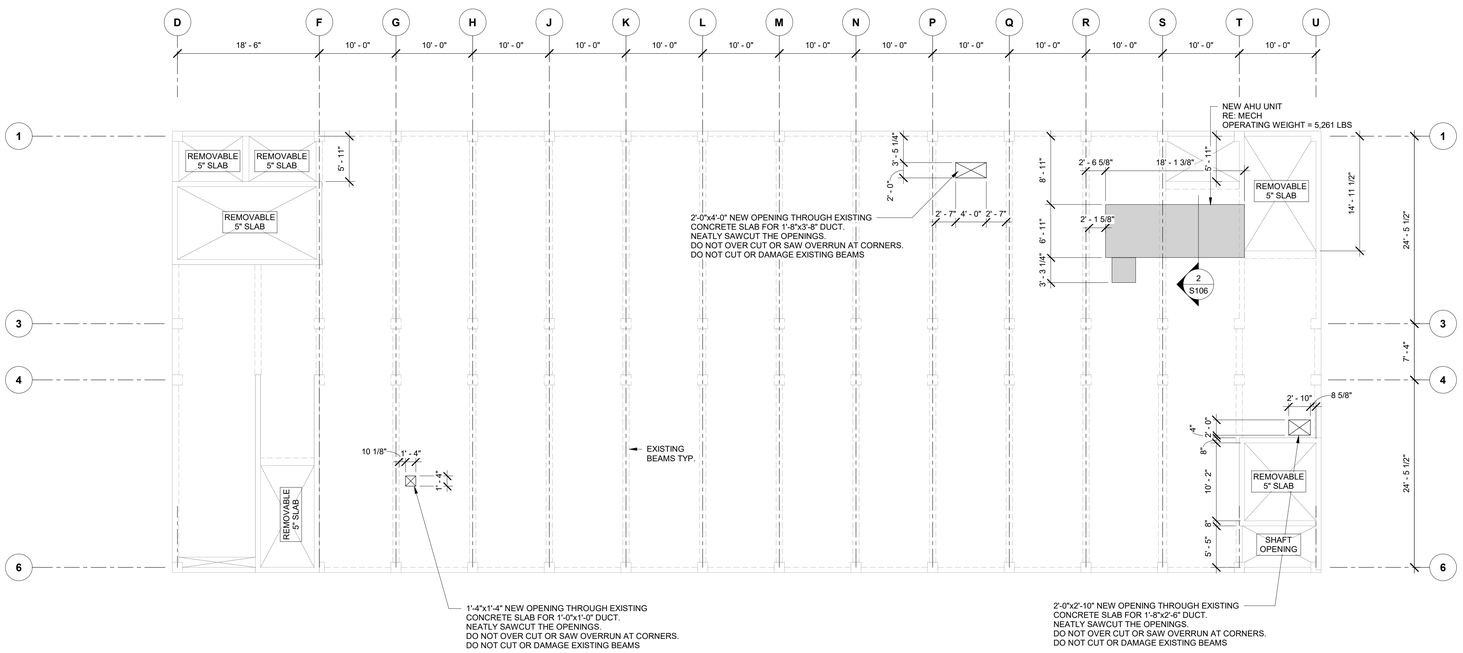

N

1 STRUCTURAL - FLOOR PLAN ROOF FLOOR
1/8" = 1'-0"

REVIEW ONLY - NOT FOR CONSTRUCTION

100% CONSTRUCTION + BID DRAWINGS	10/06/2023
100% CONSTRUCTION + BID DRAWINGS	09/28/2023
95% CONSTRUCTION DOCUMENTS	09/01/2023
Revisions:	Date:

CONSULTANT

ARCHITECT/ENGINEER OF RECORD

BANCROFT ARCHITECTS + ENGINEERS
3300 Dundee Rd.
Northbrook, IL 60062
T: 847.952.9362
www. bancroft-ae.com
VA CONTRACT NO.36C77623C0052
Bancroft Project No. 22-131

STAMP

STATE OF MISSOURI
KRISHNA G. SAHA
NUMBER PE-23092
PROFESSIONAL ENGINEER
10/06/2023

Office of Construction and Facilities Management

VA U.S. Department of Veterans Affairs

Drawing Title: STRUCTURAL - FLOOR PLAN ROOF FLOOR	Phase: 100% CONSTRUCTION + BID DRAWING	Project Title: EHRM-TASS	Project Number: 586-22-703
Approved: Project Director		Location: G.V. (Sonny) Montgomery VAMC	Building Number: 5
		Issue Date: 10/06/2023 / Checked: KGS / Drawn: GEB	Drawing Number: S106

VA FORM 08-6231

FIRE PROTECTION GENERAL NOTES

GENERAL NOTES FOR CONTRACTORS: SEE ALL PROJECT GENERAL NOTES AND OTHER REQUIREMENTS INCLUDING THE LIFE SAFETY AND INFECTION CONTROL WORK LOCATED WITHIN THE GENERAL DRAWINGS SECTION. COMPLY WITH ALL REQUIREMENTS AS THEY ARE A DIRECT PART OF THIS SECTION AS IF THEY WERE DIRECTLY INCLUDED AND PROVIDED HEREIN.

EQUIVALENCY SUBSTITUTIONS: THE "BASIS OF DESIGN (BOD) COMPLIANCE PROTOCOLS" ARE TO BE FOLLOWED FOR ALL MATERIALS, EQUIPMENT, ASSEMBLIES AND SYSTEMS SPECIFIED AND DETAILED THROUGHOUT ALL DRAWINGS AND SPECIFICATION SECTIONS, WHETHER THE BOD DESIGNATE IS SPECIFICALLY REFERENCED THEREIN OR NOT. SEE THE GENERAL DRAWINGS SECTION FOR THE SPECIFIC BOD COMPLIANCE REQUIREMENTS AND PROTOCOLS TO BE FOLLOWED.

1. THIS CONTRACTOR SHALL REVIEW ENTIRE SET OF CONTRACT DOCUMENTS: INCLUDING BUT NOT NECESSARILY LIMITED TO ARCHITECTURAL, STRUCTURAL, MECHANICAL, PLUMBING, FIRE PROTECTION, ELECTRICAL DRAWINGS AND ENTIRE PROJECT MANUAL. THIS CONTRACTOR SHALL ACKNOWLEDGE AND INCLUDE IN THE SCOPE OF WORK (CONTRACT) ALL CONDITIONS PERTINENT TO THE COMPLETION OF THEIR WORK. THE CONTRACTOR SHALL FULLY COORDINATE THEIR WORK WITH THE INSTALLATION OF THEIR WORK WITH THE INSTALLATION OF WORK BY OTHER TRADES AND MAKE NECESSARY FIELD ADJUSTMENTS AS REQUIRED TO ACCOMMODATE THE INSTALLATION. ALL OF THE ABOVE SHALL BE INCLUDED IN THE SCOPE OF WORK AT NO ADDITIONAL CHARGE TO THE VA/GOVERNMENT.

2. THIS CONTRACTOR SHALL CAREFULLY EXAMINE THE DRAWINGS AND SPECIFICATIONS, VISIT THE SITE OF THE WORK AND FULLY INFORM THEMSELVES AS TO ALL CONDITIONS AND MATTERS THAT CAN, IN ANY WAY, AFFECT THE WORK OR THE COST THEREOF. SHOULD THIS CONTRACTOR FIND DISCREPANCIES IN, OR OMISSIONS FROM THE DRAWINGS, SPECIFICATIONS OR OTHER DOCUMENTS, OR BE IN DOUBT AS TO THEIR MEANING, NOTIFY THE VA/CO AT ONCE, IN WRITING, OF ANY DISCREPANCIES BETWEEN EXISTING CONDITIONS AND NEW WORK, OR BETWEEN THEIR WORK AND THE WORK OF OTHER TRADES AND OBTAIN CLARIFICATION PRIOR TO SUBMITTING ANY BID. LACK OF SUCH NOTIFICATION SHALL BE CONSTRUED AS TO INDICATE NO DISCREPANCIES OR CONFLICTING CONDITIONS EXIST.

3. THE DRAWINGS INDICATE DIAGRAMMATICALLY THE INTENT, GENERAL CHARACTER, REQUIREMENTS AND LOCATION OF THE WORK SHOWN AND INCLUDED. THE WORK INDICATED BUT HAVING MINOR DETAILS OBVIOUSLY OMITTED SHALL BE PROVIDED AT NO ADDITIONAL COST TO THE VA/GOVERNMENT.

4. THIS CONTRACTOR IS REQUIRED TO BID, AS SPECIFIED, ON THE DRAWINGS WITHOUT DEVIATION FROM THE BOD.

5. IT IS THE INTENT OF THESE DOCUMENTS THAT THE FIRE PROTECTION CONTRACTOR PROVIDE ALL LABOR, MATERIAL, EQUIPMENT AND TOOLS FOR THE COMPLETE INSTALLATION OF ALL WORK SHOWN ON THE PLANS AND/OR DESCRIBED HEREIN, INCLUDING ALL DEVICES, CONTROLS AND APPURTENANCES REQUIRED TO SET NEW SYSTEMS INTO OPERATION.

6. SHOULD CONDITIONS NECESSITATE ANY REARRANGEMENTS, OR IF PIPING CAN BE RUN TO BETTER ADVANTAGE, PREPARE AND SUBMIT SHOP DRAWINGS SHOWING THE CHANGES BEFORE PROCEEDING WITH THE WORK. IF SUCH CHANGES ARE APPROVED BY THE VA/COR AND SUCCESSFULLY REVIEWED BY THE ARCHITECT, THEY SHALL BECOME A PART OF THE CONTRACT.

7. THIS CONTRACTOR SHALL VERIFY ALL MOUNTING, ALL ARRANGEMENTS, HEIGHTS AND LOCATIONS PRIOR TO ROUGH-IN. ANY MENTION OF A SPECIFIC MOUNTING ARRANGEMENT, WEIGHT OR LOCATION SHALL NOT RELIEVE THE CONTRACTOR OF THE RESPONSIBILITY TO VERIFY THE SPECIFIC REQUIREMENT FURNISHED OR THE OTHER TRADES WORKING IN THE SAME AREA. NO ADDITIONS TO THE CONTRACT SUM WILL BE PERMITTED FOR ITEMS INSTALLED IN WRONG LOCATIONS, IN CONFLICT WITH OTHER WORK, ETC.

8. ALL WORK SHALL BE DONE IN ACCORDANCE WITH ALL CURRENT FEDERAL BUILDING CODES, REGULATIONS, AND REQUIREMENTS, LOCAL UTILITY COMPANY REQUIREMENTS, NFPA, IPC, AND ASHRAE STANDARDS. ALL COMPONENTS SHALL BE UL LISTED AND FM APPROVED.

9. THIS CONTRACTOR SHALL PAY ALL PERMIT FEES, PLAN REVIEW FEES, LICENSE FEES, INSPECTIONS, AND TAXES APPLICABLE TO THEIR DIVISION AND SHALL BE INCLUDED IN THE BASE BID AS PART OF THEIR CONTRACT.

10. THIS CONTRACTOR SHALL BE LICENSED, BONDED, INSURED AND CAPABLE OF PERFORMING QUALITY WORKMANSHIP. THIS CONTRACTOR GUARANTEES ALL OF HIS WORK AND MATERIALS FOR THE PERIOD OF ONE YEAR. FROM FINAL ACCEPTANCE BY THE VA/GOVERNMENT.

11. THIS CONTRACTOR SHALL ESTABLISH SAFE WORKING PROCEDURES FOR THE PROTECTION OF THE WORKMEN IN ALL PHASES OF WORK, COMPLYING WITH ALL APPLICABLE PROVISIONS OF CITY, STATE, AND FEDERAL SAFETY LAWS (OSHA) AND AS RECOMMENDED IN THE "MANUAL OF ACCIDENT PREVENTION IN CONSTRUCTION" AS ISSUED BY THE ASSOCIATION OF GENERAL CONTRACTORS OF AMERICA, IN., 20TH AND E. STREETS, N.W. WASHINGTON, D.C.

12. THIS CONTRACTOR IS RESPONSIBLE FOR SCHEDULING THE PURCHASE, DELIVERY, RECEIVING, UNLOADING, UNCRATING, STORING, SETTING IN PLACE, AND PROTECTING ALL NEW EQUIPMENT FURNISHED BY THIS CONTRACTOR AND EQUIPMENT FURNISHED BY VA/GOVERNMENT FROM DAMAGE BY VANDALISM AND WEATHER DURING CONSTRUCTION.

13. THIS CONTRACTOR SHALL PROVIDE A COMPETENT OPERATING TECHNICIAN TO INSTRUCT THE VA/GOVERNMENT IN THE OPERATION AND MAINTENANCE OF THE NEW EQUIPMENT.

14. UPON COMPLETION OF THE WORK, THIS CONTRACTOR SHALL REVIEW AND CHECK THE ENTIRE PORTION OF WORK, CLEAN EQUIPMENT AND DEVICES. REMOVE SURPLUS MATERIALS AND RUBBISH FROM THE PROPERTY AND LEAVE THE WORK IN NEAT AND CLEAN ORDER AND IN COMPLETE WORKING CONDITION. EACH RESPECTIVE CONTRACTOR SHALL BE RESPONSIBLE FOR THE REMOVAL OF ANY CARTONS, DEBRIS, EQUIPMENT, ETC., INSTALLED BY THIS CONTRACTOR INCLUDING EQUIPMENT FURNISHED BY OTHERS AND UNPACKED OR REMOVED FROM CARTONS BY THIS CONTRACTOR.

15. THIS CONTRACTOR SHALL FURNISH AND INSTALL ALL STRUCTURAL STEEL MEMBERS, SLEEVES, AND SHIMS REQUIRED TO LEVEL AND SUPPORT EQUIPMENT AND PIPES.

16. BEFORE PLACING WATER SYSTEM IN OPERATION, CHLORINATE ENTIRE SYSTEM IN ACCORDANCE WITH THE REQUIREMENTS OF THE SPECIFICATIONS AND IN CONJUNCTION WITH ALL LOCAL, STATE AND FEDERAL PLUMBING CODES, SUPPLY CERTIFICATE.

17. EXISTING SERVICE VALVES AT ALL BRANCH SUPPLY PIPING SHALL REMAIN AS IS. SUCH SERVICE VALVES SHALL BE AS PER THE SPECIFICATIONS AND/OR IN KEEPING WITH THE FACILITY STANDARDS.

18. SPRINKLER HEADS SHALL BE LOCATED IN CEILING GRID IN A SYMMETRICAL PATTERN, COORDINATED WITH OTHER DEVICES MOUNTED IN OR ON THE CEILING. PROVIDE ADDITIONAL SPRINKLER HEADS REQUIRED TO ACHIEVE SYMMETRY. LOCATE SPRINKLER HEADS IN THE CENTER OF CEILING TILES.

19. SPRINKLER CONTRACTOR SHALL PROVIDE A COORDINATED REFLECTED CEILING PLAN AS PART OF THE SUBMITTAL TO THE VA/COR SHOWING SPRINKLER HEAD LOCATIONS COORDINATED WITH CEILING AND ALL OBJECTS MOUNTED IN OR ON THE CEILING.

20. THE SPRINKLER CONTRACTOR SHALL BE A LICENSED, AUTHORIZED INSTALLER OF COMMERCIAL SPRINKLER SYSTEM AND SHALL HAVE HAD A MINIMUM OF THREE (3) YEARS OF EXPERIENCE IN THE INSTALLATION OF SPRINKLER SYSTEMS.

FIRE PROTECTION GENERAL NOTES

21. THE CONTRACTOR IS RESPONSIBLE FOR THE COMPLETE DESIGN OF THE SPRINKLER SYSTEM AND TO SUBMIT HYDRAULIC CALCULATIONS PER NFPA 13 IN SUBMITTAL OF SHOP DRAWINGS AND FOR THE COMPLETE DESIGN OF THE SPRINKLER SYSTEM. THE SPRINKLER SYSTEM SHALL BE:
    - A. A DESIGNED SYSTEM IN ACCORDANCE WITH NFPA 13, 2022 AND SPECIFICATION.
    - B. DESIGNED TO CONFORM WITH BUILDING STRUCTURAL, MECHANICAL, AND ELECTRICAL SYSTEM, AS INDICATED AND DESCRIBED ON THE CONTRACT DOCUMENTS.
    - C. ACCEPTABLE TO THE FIRE MARSHAL AND OR ALL LOCAL AUTHORITIES HAVING JURISDICTION.
22. THE SPECIFICATIONS, THE CONTRACTOR SHALL SUBMIT FOR APPROVAL TO THE AUTHORITIES HAVING JURISDICTION, FULLY COORDINATED SHOP DRAWINGS OF SPRINKLER HEADS, HANGERS AND SUPPORTS. DESIGN PLAN SHALL BE PREPARED AND SIGNED/SEALED BY A REGISTERED FIRE PROTECTION ENGINEER IN ACCORDANCE WITH UCF REQUIREMENT OR BY A NICET LEVEL III/IV TECHNICIAN.
23. THE SPRINKLER SYSTEM SHALL BE INSPECTED AND TESTED IN ACCORDANCE WITH THE REQUIREMENTS OF THE INTERNATIONAL FIRE PROTECTION CODE:2021, INTERNATIONAL BUILDING CODES; 2021 AND ALL LOCAL AUTHORITIES HAVING JURISDICTION.
24. THE CONTRACTOR SHALL ARRANGE FOR INSPECTION AND TEST OF ANY OR ALL PARTS OF THE WORK AS REQUIRED BY AUTHORITIES HAVING JURISDICTION AND PAY ALL CHARGES FOR SAME.
25. ARCHITECT/ENGINEER SHALL BE RESPONSIBLE FOR OBTAINING ACCURATE FLOW TEST DATA OR PERFORMING AN UPDATED FLOW TEST AS PER NFPA 13 AND NFPA 25.
26. AREA SHALL BE DESIGNED IN ACCORDANCE WITH THE REQUIREMENT FOR OCCUPANCY PER NFPA 13.
27. THE AUTOMATIC WET FIRE SPRINKLER SYSTEM SHALL BE INSTALLED IN SUCH A MANNER TO PREVENT THE SYSTEM PIPING OR SPRINKLER HEAD EXPOSURE TO TEMPERATURES LESS THAN 40 DEGREES F.
28. PAINT NEW SPRINKLER PIPING RED AND LABEL PER NFPA 13.
29. CONTRACTOR SHALL PROVIDE COORDINATED PIPE SLEEVE DRAWINGS SHOWING ALL PENETRATIONS THROUGH FLOORS.
30. PROVIDE OR EXTEND STANDPIPE SYSTEM IN ACCORDANCE WITH NFPA 14.
31. ALL FIRE PROTECTION VALVES SHALL BE SUPERVISED.
32. CONTRACTOR SHALL PROVIDED COORDINATED PIPE SLEEVE DRAWINGS SHOWING ALL PENETRATIONS THROUGH FLOORS.
33. INSTALLER QUALIFICATIONS: CONTRACTOR'S RESPONSIBILITY SHALL INCLUDE DESIGNING, FABRICATING AND INSTALLING FIRE-SUPPRESSION SYSTEMS AND PROVIDING PROFESSIONAL ENGINEERING SERVICES OR THE SERVICES OF A NICET LEVEL III/IV TECHNICIAN AS NEEDED TO ASSUME ENGINEERING RESPONSIBILITY. CALCULATIONS BASED ON RESULTS OF THE FIRE-HYDRANT FLOW TEST(S) THEY PERFORM.
    - A. ENGINEERING RESPONSIBILITY: PREPARATION OF WORKING PLANS, CALCULATIONS, AND FIELD TEST REPORTS BY A QUALIFIED PROFESSIONAL FIRE PROTECTION ENGINEER.
34. WELDING: QUALIFY PROCESSES AND OPERATORS ACCORDING TO ASME BOILER AND PRESSURE VESSEL CODE, SECTION IX.
35. NFPA STANDARDS: FIRE SUPPRESSION SYSTEM EQUIPMENT, SPECIALTIES, ACCESSORIES, INSTALLATION AND TESTING SHALL COMPLY WITH THE FOLLOWING:
    - NFPA 13, 2022 INSTALLATION OF SPRINKLER SYSTEMS.
    - NFPA 20, 2022 STANDARD FOR ELECTRIC CENTRIFUGAL PUMPS
    - NFPA 101, 2021 LIFE SAFETY CODE.
    - NFPA 72 , 2022 FIRE ALARM CODE.
    - NFPA 75, 2020 STANDARD FOR THE FIRE PROTECTION OF INFORMATION TECHNOLOGY EQUIPMENT.
    - NFPA 99, 2021 HEALTH CARE FACILITIES CODE.
36. FIRE-SUPPRESSION SPRINKLER SYSTEM DESIGN SHALL BE APPROVED BY AUTHORITIES HAVING JURISDICTION.
    - A. MARGIN OF SAFETY FOR AVAILABLE WATER FLOW AND PRESSURE: 10 PERCENT, INCLUDING LOSSES THROUGH WATER-SERVICE PIPING, VALVES, AND BACKFLOW PREVENTERS.
37. CONTRACTOR SHALL SUBMIT FOR REVIEW TO THE VA/COR A COMPLETE LIST OF ITEMS TO BE FURNISHED AND INSTALLED UNDER THIS CONTRACT. INCLUDING, BUT NOT BE LIMITED TO THE FOLLOWING:
    - A. DIMENSIONED SHOP DRAWINGS OF MATERIALS AND FIXTURES. DIMENSIONED SHOP DRAWINGS OF EQUIPMENT AND PIPING PLAN LAYOUT(S).
38. REQUIRED ITEMS TO BE SUBMITTED SHALL INCLUDE, BUT NOT BE LIMITED TO THE FOLLOWING:
    - A. PRODUCT DATA.
    - B. APPROVED SPRINKLER PIPING DRAWINGS: WORKING PLANS, PREPARED ACCORDING TO NFPA, AND HAVE BEEN APPROVED BY AUTHORITIES HAVING JURISDICTION, INCLUDING HYDRAULIC CALCULATIONS.
    - C. FIELD QUALITY-CONTROL TEST REPORTS.
    - D. FIELD TEST CERTIFICATES.
    - E. OPERATION AND MAINTENANCE DATA.
39. CONTRACTOR SHALL SUBMIT FOR REVIEW TO THE VA/COR A COMPLETE LIST OF ITEMS TO BE FURNISHED AND INSTALLED UNDER THIS CONTRACT. INCLUDING, BUT NOT BE LIMITED TO THE FOLLOWING:
    - A. DIMENSIONED SHOP DRAWINGS OF MATERIALS, FIXTURES AND EQUIPMENT.
    - B. DIMENSIONED SHOP DRAWINGS OF EQUIPMENT AND PIPING PLAN LAYOUT(S).
40. FLEXIBLE CONNECTORS:
    - A. FLEXIBLE CONNECTORS SHALL HAVE MATERIALS SUITABLE FOR SYSTEM FLUID. INCLUDE 175 PSIG MINIMUM WORKING-PRESSURE RATING AND ENDS ACCORDING TO THE FOLLOWING:
        - a. NPS 2 AND SMALLER: THREADED.
        - b. NPS 2-1/2 AND LARGER: GROOVED FOR USE WITH GROOVED-END PIPE COUPLINGS.
    - B. STAINLESS-STEEL-HOSE/STEEL PIPE, FLEXIBLE CONNECTORS: CORRUGATED, STAINLESS-STEEL, INNER TUBING COVERED WITH STAINLESS-STEEL WIRE BRAID. INCLUDE STEEL NIPPLES OR FLANGES, WELDED TO HOSE.
    - C. STAINLESS-STEEL-HOSE/STAINLESS-STEEL PIPE, FLEXIBLE CONNECTORS: CORRUGATED STAINLESS-STEEL, INNER TUBING COVERED WITH STAINLESS-STEEL WIRE BRAID. INCLUDE STAINLESS-STEEL NIPPLES OR FLANGES, WELDED TO HOSE.
    - D. ALL CONNECTIONS AND FLEXIBLE HOSES SHALL BE FM APPROVED.

FIRE PROTECTION GENERAL NOTES

42. EXISTING FIRE SPRINKLER PROTECTION SYSTEM:
    - A. THE EXISTING FIRE SPRINKLER SYSTEMS SHALL BE OPERATIONAL THROUGHOUT THE PROJECT.
    - B. THE SYSTEM MAY ONLY BE NON-OPERATIONAL FOR SCHEDULED SHUTDOWNS. THIS SHALL NOT EXCEED 16 HOURS WITHIN A 24 HOUR PERIOD.
    - C. THE CONTRACTOR SHALL BE RESPONSIBLE FOR PROVIDING A FIRE WATCH IF THE SYSTEM IS OUT OF SERVICE FOR MORE THAN 4 HOURS IN AN OCCUPIED BUILDING. THIS WILL REQUIRE DEDICATED PERSONNEL TO PERFORM THE FIRE WATCH WITH NO OTHER TASK PERFORMED.
    - D. VA/COR TO COORDINATE CONTRACTOR REQUESTED SHUTDOWN WITH APPROPRIATE VA SHOP PERSONNEL WITH 8/72 HOUR PRIOR NOTIFICATION BY THE CONTRACTOR AND APPROVAL BY THE VA SAFETY.

FIRE PROTECTION DELEGATED - DESIGN NOTE

THE FIRE PROTECTION CONTRACTOR SHALL BE RESPONSIBLE FOR DESIGNING AND PROVIDING A COMPLETE, FUNCTIONAL, AND CODE COMPLIANT AUTOMATIC SPRINKLER SYSTEM. REFER TO GENERAL NOTES FOR ADDITIONAL DETAIL CONCERNING DESIGN, FLOW TEST, HYDRAULIC CALCULATIONS PER NFPA 13, 14, TO BE SUBMITTED, COORDINATION, AND SHOP DRAWINGS REQUIREMENTS.

FIRE PROTECTION SYMBOL LIST

SYMBOL	DESCRIPTION
	SCOPE OF WORK BOUNDARY
SP	FIRE SPRINKLER PIPING
D	DRAIN PIPING
SS	STANDPIPE SYSTEM PIPING
	CHECK VALVE
	CONTROL PANEL
	OS&Y ZONE CONTROL VALVE W/ TAMPER SWITCH
FS	FLOW SWITCH
PS	PRESSURE SWITCH
TS	TAMPER SWITCH
P	PRESSURE GAUGE
	INSPECTOR TEST
	SIGHT GLASS
	UNION
F HS	HORN/STROBE ALARM
	WALL MOUNTED FIRE DEPARTMENT CONNECTION
	FREE STANDING FIRE DEPARTMENT CONNECTION
	DOUBLE CHECK BACKFLOW PREVENTER
	CONTINUATION
(D)	SPRINKLER HEADS TO BE DEMO
	SPRINKLER HEADS TO REMAIN
	FIRE EXTINGUISHER CABINET
	RISER
F H	FIRE ALARMS-HORN
F	SMOKE DETECTORS
F HS	STROBE LIGHT
	SHUT-OFF VALVE
	NEW CONNECTION
	DEMO AND CAP EXISTING
	A/S HEAD IN CAGE

FIRE PROTECTION SPRINKLER SYSTEM DESIGN CRITERIA

HAZARD SYMBOL	HAZARD CLASSIFICATION	SPACE TYPE	DISCHARGE DENSITY	REMOTE AREA	MAXIMUM COVERAGE AREA PER SPRINKLER	MAXIMUM SPACING	WATER SUPPLY DURATION	OUTSIDE HOSE ALLOWANCE	TEMPERATURE CLASSIFICATION	REMARKS	NOTES
			GPM/FT²	FT²	FT²	FT.	MINUTES	GPM			
	LIGHT HAZARD	PUBLIC AREAS OFFICE AREAS PATIENT CARE PATIENT TREATMENT TOILET ROOMS PROCEDURE ROOMS	0.10	1,500	225	15	30	100	ORDINARY		1
	ORDINARY HAZARD GROUP 1	MECH. & ELEC EQUIPMENT RM.	0.15	1,500	130	15	60-90	250	INTERMEDIATE		1
		HOUSEKEEPING CLOSET	0.15	1,500	130	15	60-90	250	ORDINARY		
	ORDINARY HAZARD GROUP 2	STORAGE TRASH ROOMS CLEAN/SOILED UTILITY ROOMS	0.20	1,500	130	15	60-90	250	ORDINARY		1
	EXTRA HAZARD GROUP 1	N/A	0.30	2,500	130	15	90-120	1,900	ORDINARY		1
	EXTRA HAZARD GROUP 2	N/A	0.40	2,500	130	15	90-120	1,900	ORDINARY		1
	N/A	EXISTING SPRINKLERS TO BE DEMOLISHED	N/A	N/A	N/A	N/A	N/A	N/A	N/A		N/A
	N/A	NOT IN SCOPE	N/A	N/A	N/A	N/A	N/A	N/A	N/A		N/A

NOTES:
1. WATER DEMAND REQUIREMENTS ARE FOR HYDRAULIC CALCULATION METHOD. IF OTHER METHOD IS USED ADJUST VALUES ACCORDING TO NFPA 13 REQUIREMENTS.

FIRE PROTECTION ABBREVIATION LIST

SYMBOL	DESCRIPTION
AFF	ABOVE FINISH FLOOR
AHJ	AUTHORITY HAVING JURISDICTION
DP	DRY PENDENT
DN	DOWN
EC	EXTENDED COVERAGE
EX	EXISTING
FDC	FIRE DEPARTMENT CONNECTION
FHC	FIRE HOSE CABINET
FHV	FIRE HOSE VALVE
FM	FACTORY MUTUAL
FP	FIRE PROTECTION
FPC	FIRE PROTECTION CONTRACTOR
FT	FEET
GC	GENERAL CONTRACTOR
HT	HIGH TEMPERATURE
IN	INCH
K-F	SPRINKLER K-FACTOR
NIC	NOT IN CONTRACT
PC	PLUMBING CONTRACTOR
QR/QRS	QUICK RESPONSE
SPR	SPRINKLER
SR	STANDARD RESPONSE
SS	STANDPIPE SYSTEM
SSP	STANDARD PENDENT SPRINKLER
SSU	STANDARD UPRIGHT SPRINKLER
STND	STANDARD
THR	THREADED
UL	UNDERWRITER'S LABORATORIES

THESE LISTS OF SYMBOLS AND ABBREVIATIONS ARE GENERAL. NOT ALL SYMBOLS AND ABBREVIATIONS MY BE APPLICABLE TO THIS PROJECT.

FIRE PROTECTION SPRINKLER SCHEDULE

SYMBOL	TYPE	RE.	K-F	FINISH	REMARKS
●	SEMI-RECESSED PENDENT	QR	5.6	WHITE	NOTE 1
○	UPRIGHT	QR	5.6	BRASS	NOTE 2
○ SSP	PENDANT	QR	5.6	BRASS	NOTE 2
▼	SIDEWALL	QR	5.6	WHITE	NOTE 2
▽	DRY SIDEWALL	QR	5.6	WHITE	NOTE 2

GENERAL NOTES:
1. SPRINKLER SHALL BE THE APPROPRIATE TEMPERATURE RATING FOR LOCATION AND OCCUPANCY IN ACCORDANCE WITH NFPA 13.
2. SPRINKLER SHALL ALIGN WITH LIGHT FIXTURES AND OTHER CEILING MOUNTED DEVICES. COORDINATE SPRINKLER LOCATIONS WITH ARCHITECT'S REFLECTED CEILING PLAN, AND PROVIDE ADDITIONAL SPRINKLERS WHERE REQUIRED TO MAINTAIN THE CEILING LAYOUT OF ALL DISCIPLINES, FIXTURES, EQUIPMENT AND WORK.

NOTES:
1. PROVIDE HIGH TEMPERATURE RATED SPRINKLERS IN VESTIBULES.
2. PROVIDED WITH LISTED SPRINKLER GUARD FOR INSTALLATION BELOW 7-FT AFF.

REVIEW ONLY - NOT FOR CONSTRUCTION

Revisions:	Date:
100% CONSTRUCTION + BID DRAWINGS	09/28/2023
95% CONSTRUCTION DOCUMENTS	09/01/2023
65% DESIGN DEVELOPMENT	07/27/2023

CONSULTANT

ARCHITECT/ENGINEER OF RECORD
BANCROFT ARCHITECTS + ENGINEERS
3300 Dundee Rd.
Northbrook, IL 60062
T: 847.952.9362
www.bancroft-ae.com
VA CONTRACT NO.36C77623C0052
Bancroft Project No. 22-131

STAMP
LICENSED PROFESSIONAL ENGINEER RAED HAMID 062.065546 OF ILLINOIS
10-06-2023

Office of Construction and Facilities Management
U.S. Department of Veterans Affairs

Drawing Title: FIRE PROTECTION - GENERAL NOTES, SYMBOLS AND ABBREVIATIONS
Approved: Project Director
Phase: 100% CONSTRUCTION DOCUMENTS - FOR BID
Project Title: EHRM-TASS
Project Number: 586-22-703
Building Number: 5
Location: G.V. (Sonny) Montgomery VAMC
Issue Date: 09/28/2023
Checked: RH
Drawn: HS
Drawing Number: FX001

VA FORM 08-6231

FIRE PROTECTION DEMO KEYNOTES

1. DISCONNECT AND REMOVE EXISTING HOSE VALVE CABINET. PATCH WALLS TO MATCH EXISTING.
2. CUT AND CAP EXISTING 2"FP PIPING SERVIING EXISTING HOSE VALVE BACK TO MAIN. REFER TO SHEET 5/FX500 FOR DETAIL.

GENERAL FIRE PROTECTION DEMOLITION NOTES

A. FIRE PROTECTION CONTRACTOR TO COORDINATE WITH VA COR (OWNER'S REPRESENTATIVE) FOR ALL FIRE PROTECTION SERVICE OUTAGES.

B. THE FIRE PROTECTION DRAWINGS ARE CONCEPTUAL. FOR GENERAL INFORMATION ONLY AND NOT AN EXACT INDICATOR OF PIPE OR SPRINKLER HEAD LOCATIONS.

C. FIRE PROTECTION CONTRACTOR SHALL BE RESPONSIBLE FOR ANY DAMAGE TO FINISHES OR COMPONENTS NOT SCHEDULED FOR DEMOLITION. DAMAGED ITEMS SHALL BE REPLACED OR REPAIRED TO MEET OR EXCEED FORMER CONDITIONS.

D. GENERAL CONTRACTOR IS RESPONSIBLE FOR REMOVAL AND REPLACEMENT OF CEILING, CEILING TILES, AND CEILING GRIDS ASSOCIATED WITH AREAS OF WORK BY ALL CONTRACTORS.

E. AREA OF WORK WHERE EXISTING CEILINGS ARE TO BE REMOVED AND NEW FINISHED CEILING TO BE INSTALLED; ALL EXISTING MOUNTED ITEMS SHALL BE REMOVED, STORED AND REINSTALLED IN SAME LOCATION.

F. FIRE PROTECTION CONTRACTOR IS RESPONSIBLE FOR ALL COST ASSOCIATED WITH CEILING DISASSEMBLY AND REASSEMBLY TO ACCOMMODATE THIS WORK. CONTRACTOR TO SALVAGE, STORE, AND REINSTALL ALL CEILING MOUNTED DEVICES.

G. REMOVE ALL ASSOCIATED CLAMPS, HANGERS, SUPPORTS, ETC., ASSOCIATED WITH PIPING REMOVAL.

H. FIRE PROTECTION CONTRACTOR IS RESPONSIBLE FOR ALL MODIFICATIONS TO THE EXISTING PIPING NECESSARY TO PERMIT THE INSTALLATION OF NEW WORK.

I. DURING DEMOLITION, WHERE COMPLETION OF A/S HEAD CHANGEOUT CANNNOT BE COMPLETED IN A SINGLE WORK PERIOD, FIRE PROTECTION CONTRACTOR SHALL REVERSE A/S HEAD CONNECTION TO UPRIGHT POSITION, PROVIDE A NEW UPRIGHT SPRINKLER AND SPRING IF NECESSARY, TO KEEP SYSTEM ACTIVE DURING CONSTRUCTION. ON COMPLETION OF THE CEILING WORK, REPLACE UPRIGHT A/S HEAD (AND DISPOSE OF) WITH THE DESIGNATED NEW FINAL TYPE TO COMPLETE CONSTRUCTION WORK.

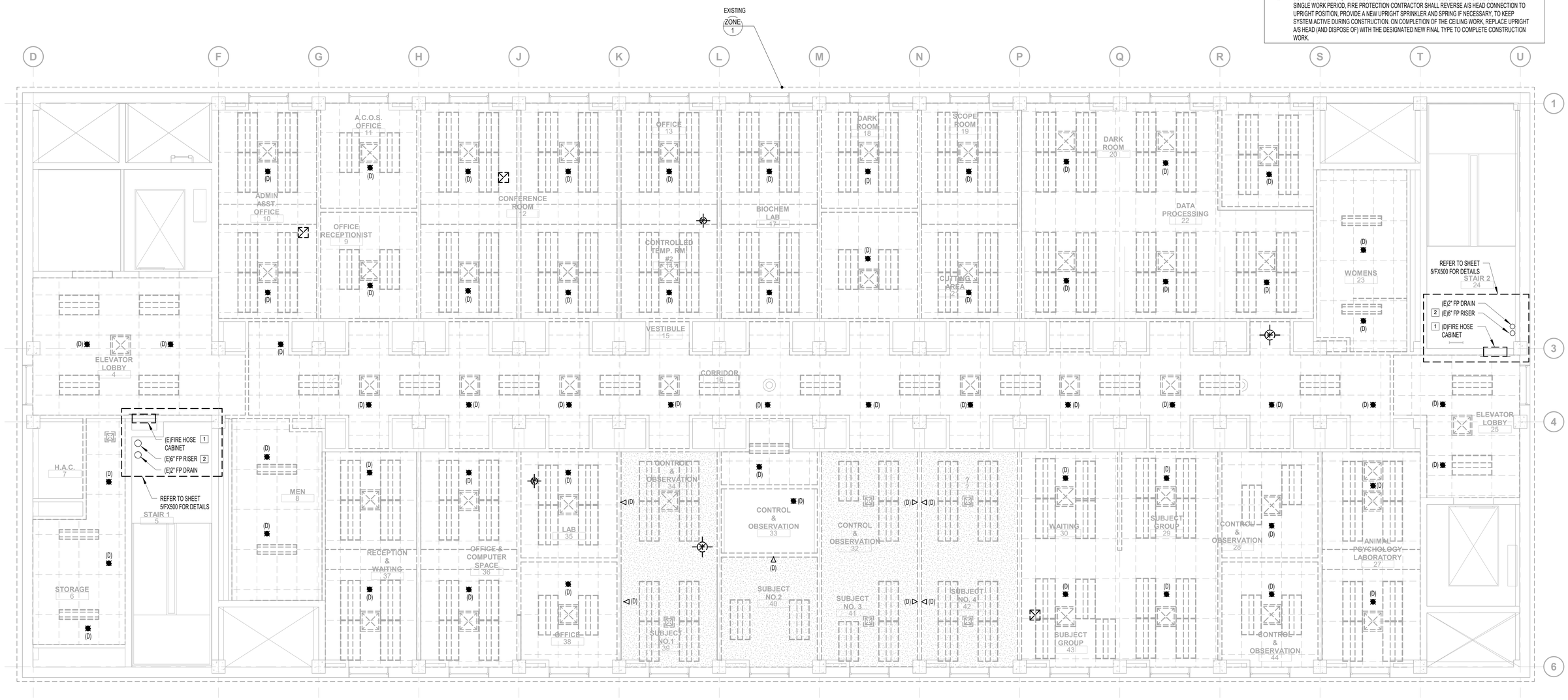

N

1 **FIRE PROTECTION - 4TH FLOOR DEMO PLAN**

1/4" = 1'-0"

REVIEW ONLY - NOT FOR CONSTRUCTION

100% CONSTRUCTION + BID DRAWINGS	10/06/2023
100% CONSTRUCTION + BID DRAWINGS	09/28/2023
95% CONSTRUCTION DOCUMENTS	09/01/2023
65% DESIGN DEVELOPMENT	07/27/2023
Revisions:	Date:

CONSULTANT

ARCHITECT/ENGINEER OF RECORD

BANCROFT ARCHITECTS + ENGINEERS
3300 Dundee Rd.
Northbrook, IL 60062
T: 847.932.9362
www.bancroft-ae.com
VA CONTRACT NO.36C77623C0052
Bancroft Project No. 22-131

STAMP

LICENSED PROFESSIONAL ENGINEER RAED HAMID 062.065548 OF ILLINOIS
10-06-2023

Office of Construction and Facilities Management

VA U.S. Department of Veterans Affairs

Drawing Title: FIRE PROTECTION - 4TH FLOOR DEMO PLAN

Approved: Project Director

Phase: 100% CONSTRUCTION DOCUMENTS - FOR BID

Project Title: EHRM-TASS

Project Number: 586-22-703

Building Number: 5

Location: G.V. (Sonny) Montgomery VAMC

Issue Date: 10/06/2023 | Checked: RH | Drawn: HS

Drawing Number: FD100

VA FORM 08-6231

GENERAL FIRE PROTECTION NOTES

A. THE FIRE PROTECTION DRAWINGS ARE CONCEPTUAL, FOR GENERAL INFORMATION ONLY AND SHALL NOT BE CONSTRUDED AS FINAL DESIGN OR INSTALLATION DOCUMENTS. THE SPRINKLER DESIGN AND INSTALLATION SHALL BE THE RESPONSIBILITY OF THE DESIGN BUILD FIRE PROTECTION CONTRACTOR, THIS INCLUDE THE RELOCATION OF SPRINKLER MAINS, BRANCH PIPING AND HEADS AS NECESSARY FOR THE NEW DESIGN. REFER TO SPECIFICATION FOR DESIGN CRITERIA.

B. DESIGN TO BE IN ACCORDANCE WITH THE VA FIRE PROTECTION DESIGN MANUAL, DATED DECEMBER 2015.

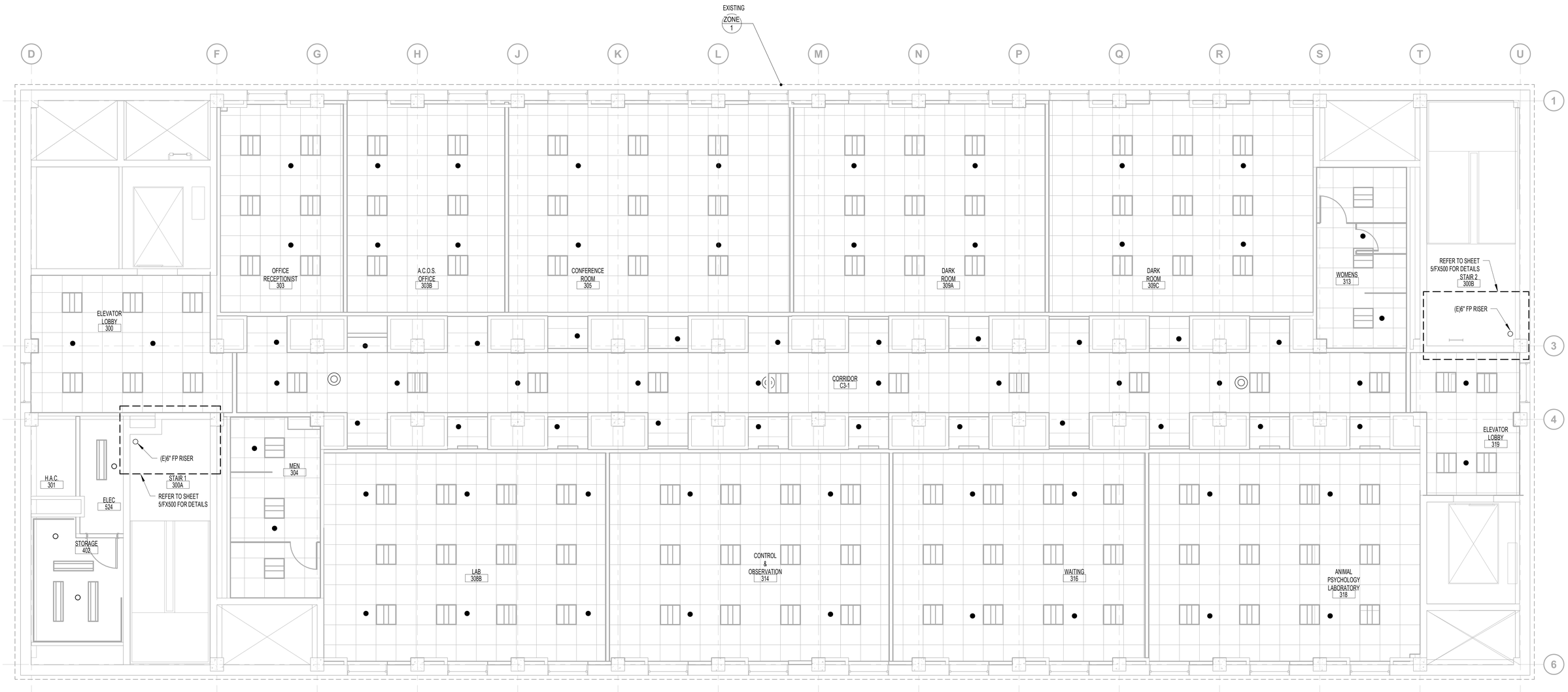

N

1 **FIRE PROTECTION - 4TH FLOOR PLAN - NEW WORK**

1/4" = 1'-0"

REVIEW ONLY - NOT FOR CONSTRUCTION

Revisions:	Date:
100% CONSTRUCTION + BID DRAWINGS	10/06/2023
100% CONSTRUCTION + BID DRAWINGS	09/28/2023
95% CONSTRUCTION DOCUMENTS	09/01/2023
65% DESIGN DEVELOPMENT	07/27/2023

CONSULTANT

ARCHITECT/ENGINEER OF RECORD

BANCROFT ARCHITECTS + ENGINEERS
3300 Dundee Rd.
Northbrook, IL 60062
T: 847.952.9362
www.bancroft-ae.com
VA CONTRACT NO.36C77623C0052
Bancroft Project No. 22-131

STAMP

LICENSED PROFESSIONAL ENGINEER
RAED HAMID
062.065548
OF ILLINOIS
10-06-2023

Office of Construction and Facilities Management

VA U.S. Department of Veterans Affairs

Drawing Title: FIRE PROTECTION - 4TH FLOOR - NEW WORK

Approved: Project Director

Phase: 100% CONSTRUCTION DOCUMENTS - FOR BID

Project Title: EHRM-TASS

Project Number: 586-22-703

Building Number: 5

Location: G.V. (Sonny) Montgomery VAMC

Issue Date: 10/06/2023

Checked: RH

Drawn: HS

Drawing Number: FX104

VA FORM 08-6231

4 TYPICAL SPRINKLER WITH WIRE GUARD DETAIL

NOT TO SCALE

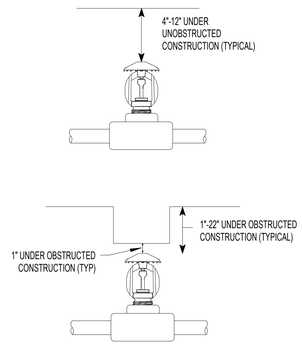

3 TYPICAL SPRINKLER FROM DECK OR OBSTRUCTION DETAIL

NOT TO SCALE

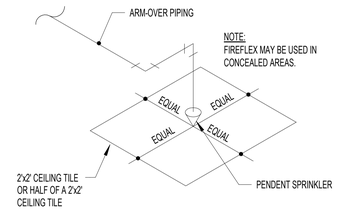

2 TYPICAL CEILING SPRINKLER ARM-OVER DETAIL

NOT TO SCALE

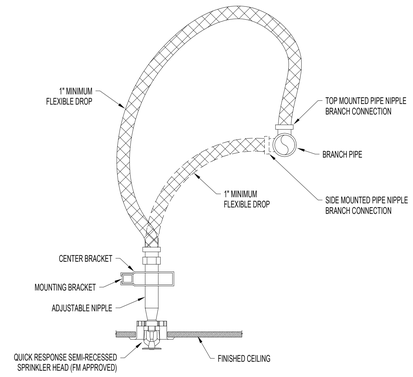

1 SPRINKLER RETURN BEND DETAIL

NOT TO SCALE

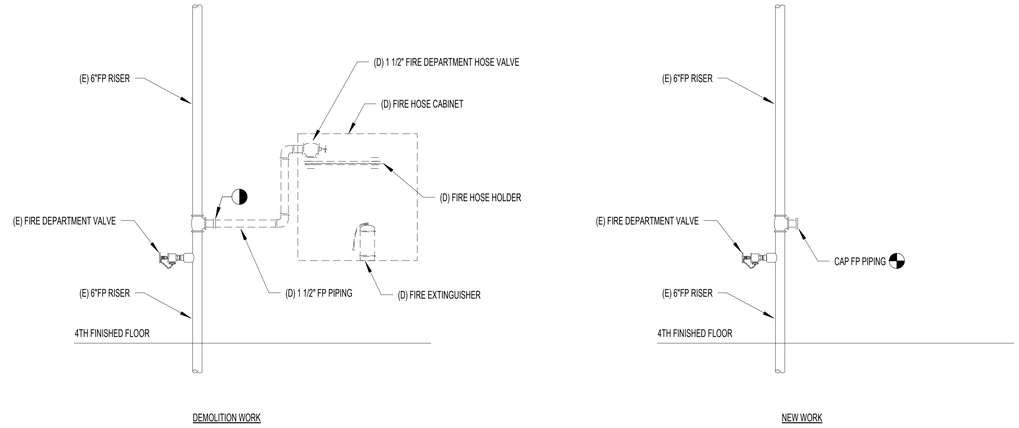

5 HOSE VALVE DETAILS

NOT TO SCALE

REVIEW ONLY - NOT FOR CONSTRUCTION

100% CONSTRUCTION + BID DRAWINGS	10/06/2023
100% CONSTRUCTION + BID DRAWINGS	09/28/2023
95% CONSTRUCTION DOCUMENTS	09/01/2023
Revisions:	Date:

CONSULTANT

ARCHITECT/ENGINEER OF RECORD

BANCROFT ARCHITECTS + ENGINEERS
3300 Dundee Rd.
Northbrook, IL 60062
T: 847.952.9362
www.bancroft-ae.com
VA CONTRACT NO.36C77623C0052
Bancroft Project No. 22-131

STAMP

LICENSED PROFESSIONAL ENGINEER RAED HAMID 062.065548 OF ILLINOIS
10-06-2023

Office of Construction and Facilities Management

VA U.S. Department of Veterans Affairs

Drawing Title: FIRE PROTECTION - DETAILS

Approved: Project Director

Phase: 100% CONSTRUCTION DOCUMENTS - FOR BID

Project Title: EHRM-TASS

Project Number: 586-22-703

Building Number: 5

Location: G.V. (Sonny) Montgomery VAMC

Issue Date: 10/06/2023

Checked: RH

Drawn: HS

Drawing Number: FX500

VA FORM 08-6231

PLUMBING GENERAL NOTES

SEE ALL PROJECT GENERAL NOTES AND OTHER REQUIREMENTS INCLUDING THE LIFE SAFETY AND INFECTION CONTROL REQUIREMENTS LOCATED WITHIN THE GENERAL DRAWINGS SECTION. COMPLY WITH ALL REQUIREMENTS AS THEY ARE A DIRECT PART OF THIS SECTION AND AS IF THEY WERE DIRECTLY INCLUDED AND PROVIDED BELOW.

EQUIVALENCY SUBSTITUTIONS: THE "BASIS OF DESIGN (BOD) PROTOCOLS" ARE TO BE FOLLOWED FOR ALL EQUIPMENT, MATERIALS AND ASSEMBLIES SPECIFIED AND DETAILED THROUGHOUT ALL DRAWINGS AND SPECIFICATION SECTIONS, WHETHER THE BOD DESIGNATE IS SPECIFICALLY REFERENCED THEREIN OR NOT. SEE THE GENERAL DRAWINGS SECTION FOR THE FULL BOD EQUIVALENCY SUBSTITUTION REQUIREMENTS AND PROTOCOLS TO BE FOLLOWED.

1. THIS CONTRACTOR SHALL REVIEW ENTIRE SET OF CONTRACT DOCUMENTS: INCLUDING BUT NOT NECESSARILY LIMITED TO ALL ARCHITECTURAL, STRUCTURAL, MECHANICAL, PLUMBING, FIRE PROTECTION, AND ELECTRICAL DRAWINGS AND ENTIRE PROJECT SPECIFICATIONS. THIS CONTRACTOR SHALL ACKNOWLEDGE AND INCLUDE IN THE SCOPE OF WORK (CONTRACT) ALL CONDITIONS PERTINENT TO THE COMPLETION OF HIS WORK. THIS CONTRACTOR SHALL FULLY COORDINATE HISHER WORK WITH THE INSTALLATION OF WORK BY OTHER TRADES AND MAKE NECESSARY FIELD ADJUSTMENTS AS REQUIRED TO ACCOMMODATE THE INSTALLATION. ALL OF THE ABOVE SHALL BE INCLUDED IN THE SCOPE OF WORK.

2. THIS CONTRACTOR SHALL CAREFULLY EXAMINE THE DRAWINGS AND SPECIFICATIONS, VISIT THE SITE OF THE WORK AND FULLY INFORM THEMSELVES AS TO ALL CONDITIONS AND MATTERS THAT CAN, IN ANY WAY, AFFECT THE WORK OR THE COST THEREOF. SHOULD THIS CONTRACTOR FIND DISCREPANCIES IN, OR OMISSIONS FROM THE DRAWINGS, SPECIFICATIONS OR OTHER DOCUMENTS, OR BE IN DOUBT AS TO THEIR MEANING, NOTIFY THE VA/COR AT ONCE, IN WRITING, OF ANY DISCREPANCIES BETWEEN EXISTING CONDITIONS AND NEW WORK, OR BETWEEN THEIR WORK AND THE WORK OF OTHER TRADES AND OBTAIN CLARIFICATION PRIOR TO SUBMITTING ANY BID. LACK OF SUCH NOTIFICATION SHALL BE CONSTRUED AS TO INDICATE NO DISCREPANCIES OR CONFLICTS EXIST.

3. THE DRAWINGS INDICATE DIAGRAMMATICALLY THE INTENT, GENERAL CHARACTER, REQUIREMENTS AND LOCATION OF THE WORK SHOWN AND INCLUDED. THE WORK INDICATED, BUT HAVING MINOR DETAILS OBVIOUSLY OMITTED, SHALL BE PROVIDED AT NO ADDITIONAL COST TO THE VA.

4. THE CONTRACTOR IS REQUIRED TO BID, AS SPECIFIED, THE WORK SHOWN ON THE DRAWINGS AND PROVIDED IN THE SPECIFICATIONS WITHOUT DEVIATION, WITH THE EXCEPTION OF ANY BASIS OF DESIGN (BOD) EQUIVALENCY SUBSTITUTIONS. THESE REQUESTED SUBSTITUTIONS WILL NEED TO BE IDENTIFIED, SUBMITTED AND APPROVED BY THE VA/CO DURING THE BIDDING PHASE AND IF DURING CONSTRUCTION BY THE VA/COR AND THE VA/CO RESPECTIVELY. CONTRACTOR IS REQUIRED TO PREPARE A DETAILED LIST OF THE PROPOSED EQUIVALENCY SUBSTITUTION ITEMS ALONG WITH THE DOCUMENTED COMPARATIVE ANALYSIS AND THE LISTING OF ALL VARIANCE IMPACTS TO THE PROJECT FOR EACH REQUESTED ITEM OF WORK. EQUIVALENCY SUBSTITUTIONS REQUESTS FOR VA CONSIDERATION WILL FIRST NEED TO BE APPROVED BY THE VA BEFORE PROCEEDING WITH ANY BIDDING AND ANY OF THE WORK. ALL REQUESTED BOD EQUIVALENCY SUBSTITUTIONS WILL FIRST NEED TO BE FULLY REVIEWED, EVALUATED AND APPROVED BY THE VA/CO PRIOR TO BID SUBMISSION AND IF OCCURRING DURING CONSTRUCTION BY THE VA/COR AND IN TURN THE VA/CO BEFORE ANY WORK CAN BE PERFORMED.

5. THIS CONTRACTOR IS RESPONSIBLE TO FURNISH AND INSTALL ALL LABOR AND MATERIALS NECESSARY FOR A COMPLETE SYSTEM. WHERE THERE IS NO MENTION OF THE RESPONSIBLE PARTY FOR A SPECIFIC ITEM TO BE FURNISHED OR INSTALLED ON THE DRAWINGS, THE DRAWING'S TRADE CONTRACTOR SHALL BE COMPLETELY RESPONSIBLE FOR ALL RELATED PURCHASES AND LABOR FOR PROVIDING A COMPLETE OPERATING SYSTEM FOR THIS ITEM.

6. WHEN PERFORMING ANY CUTTING OR PATCHING (RESTORE TO ORIGINAL STATE) ALL BUILDING MATERIALS AND FINISHES AS REQUIRED TO PROVIDE A FINISHED PRODUCT THAT IS LIKE NEW AND DOESN'T STAND OUT AS BEING DIFFERENT OR DISTINGUISHABLE AS A PATCH OR REPAIR.

7. THIS CONTRACTOR SHALL VERIFY AND COORDINATE ALL MOUNTING, ARRANGEMENTS, HEIGHTS AND LOCATIONS PRIOR TO ROUGH-IN AS REQUIRED BY THE VA DESIGN GUIDES/MANUALS ALONG WITH THE EXPRESSED DESIGN INTENT PRESENTED WITHIN THESE DOCUMENTS.

8. THIS CONTRACTOR SHALL FURNISH AND INSTALL ALL SLEEVES THRU WALLS AND THROUGH FLOORS, INCLUDING CORING IF REQUIRED.

9. PLUMBING CONTRACTOR SHALL VERIFY EXACT LOCATION OF ALL EXISTING SANITARY, STORM AND WATER SUPPLY ON THE SITE PRIOR TO THE PERFORMANCE OF ANY WORK

10. PROVIDE SERVICE VALVES AT ALL BRANCH SUPPLY PIPING. SUCH SERVICE VALVES SHALL BE AS PER THE SPECIFICATIONS AND IN KEEPING WITH THE VA STANDARDS AND REQUIREMENTS.

11. ALL WORK SHALL BE DONE IN ACCORDANCE WITH ALL CURRENT GOVERNING LOCAL, COUNTY, STATE, AND FEDERAL BUILDING CODE REQUIREMENTS AND REGULATIONS PLUS COMPLIANCE WITH LOCAL UTILITY COMPANY REQUIREMENTS.

12. THIS CONTRACTOR SHALL BE LICENSED, BONDED, INSURED AND CAPABLE OF PERFORMING QUALITY WORKMANSHIP.

13. THIS CONTRACTOR SHALL ESTABLISH SAFE WORKING PROCEDURES FOR THE PROTECTION OF ALL PERSONNEL THRU ALL PHASES OF WORK, COMPLYING WITH ALL APPLICABLE PROVISIONS OF CITY, STATE, AND FEDERAL SAFETY LAWS (OSHA) AND AS RECOMMENDED IN THE "MANUAL OF ACCIDENT PREVENTION IN CONSTRUCTION" AS ISSUED BY THE ASSOCIATION OF GENERAL CONTRACTORS OF AMERICA, INC., 20TH AND E. STREETS, N.W. WASHINGTON, D.C.

14. THIS CONTRACTOR IS RESPONSIBLE FOR SCHEDULING THE PURCHASE, DELIVERY, RECEIVING, UNLOADING, UNCRATING, STORING, SETTING IN PLACE, AND PROTECTING OF ALL NEW EQUIPMENT AND MATERIALS FURNISHED BY THIS CONTRACTOR ALONG WITH EQUIPMENT FURNISHED BY THE VA AND INSTALLED BY THIS CONTRACTOR. PROVIDE PROTECTION FROM DAMAGE BY THE CONSTRUCTION, HANDLING, VANDALISM AND WEATHER DURING ALL PHASES OF CONSTRUCTION UNTIL COMPLETION OF THE WORK.

15. THIS CONTRACTOR SHALL SUBMIT SHOP DRAWINGS IN THE NUMBERS REQUIRED BY THE SPECIFICATIONS PRIOR TO THE START OF INSTALLATION FOR VA/COR APPROVAL AND A SUCCESSFUL REVIEW BY THE ARCHITECT/ENGINEER.

16. THIS CONTRACTOR SHALL FURNISH AS-BUILT CONTRACT DOCUMENTS TO THE VA/COR BEFORE FINAL PROJECT CLOSE-OUT CAN OCCUR. THE CONTRACT RECORD AS-BUILT DOCUMENTS SHALL BE PROVIDED IN ELECTRONIC REPRODUCIBLE FORM.

17. BEFORE PLACING WATER SYSTEM IN OPERATION, CHLORINATE ENTIRE SYSTEM IN ACCORDANCE WITH THE REQUIREMENTS OF THE SPECIFICATIONS AND IN CONJUNCTION WITH ALL LOCAL, STATE AND FEDERAL PLUMBING CODES ALONG WITH ALL REQUIREMENTS OF THE VA, BOTH FEDERAL AND LOCAL. WHEN PROPERLY COMPLETED AND APPROVED BY THE VA/COR PROVIDE THE SPECIFIED CERTIFICATION(S).

18. ALL NEW SANITARY PIPING SHALL BE GIVEN A FULL STATIC PRESSURE TEST. METHOD OF TEST AND REQUIREMENTS TO BE MET SHALL BE AS PER THE SPECIFICATIONS AND IN CONJUNCTION WITH ALL LOCAL, STATE AND FEDERAL CODE REQUIREMENTS ALONG WITH ALL REQUIREMENTS OF THE VA, BOTH FEDERAL AND LOCAL.

19. PLUMBING CONTRACTOR SHALL BE RESPONSIBLE FOR THE PUMPING AND DRAINING OF TRENCHES OR PITS NECESSARY FOR THE INSTALLATION OF THEIR WORK.

20. UPON COMPLETION OF THE WORK, THIS CONTRACTOR SHALL REVIEW AND CHECK THE ENTIRE PORTION OF THEIR WORK, CLEAN EQUIPMENT AND DEVICES, REMOVE SURPLUS MATERIALS AND RUBBISH FROM THE PROPERTY, LEAVE THE WORK IN NEAT AND CLEAN ORDER, AND PROVIDE A COMPLETED SYSTEM(S) THAT HAS BEEN FULLY TESTED AND IS IN GOOD WORKING CONDITION. EACH RESPECTIVE CONTRACTOR SHALL BE RESPONSIBLE FOR THE REMOVAL OF ANY CARTONS, DEBRIS, EQUIPMENT, ETC., INSTALLED BY THIS CONTRACTOR INCLUDING EQUIPMENT FURNISHED BY OTHERS.

21. THROUGH PENETRATIONS SHALL BE PROTECTED BY AN APPROVED PENETRATION FIRESTOP SYSTEM PER VA SPECIFICATION PLUMBING INSULATION 22 07 11 AND FIRE STOPPING SPECIFICATION 07 84 00.

22. ALL EQUIPMENT/DEVICES SHALL BE AND OF FIRST RATE QUALITY (UNLESS OTHERWISE SPECIFIED) AND IS TO BEAR THE APPROPRIATE AGA, CSA OR UL APPROVED LABELS, LISTINGS, AND CERTIFICATIONS FOR THE SPECIFIC DESIGN PURPOSE.

23. THE DRAWINGS, SCHEDULES AND SPECIFICATIONS HAVE BEEN PREPARED USING ONE MANUFACTURER FOR EACH PIECE OF EQUIPMENT AS THE BASIS FOR DIMENSIONAL DESIGN. IF THE CONTRACTOR PURCHASES EQUIPMENT FROM A SPECIFIED ACCEPTABLE MANUFACTURER, BUT NOT THE SCHEDULED MANUFACTURER USED FOR THE BASE DESIGN, THE CONTRACTOR SHALL BE RESPONSIBLE FOR CHECKING ALL THE DIMENSIONS OF THE EQUIPMENT TO VERIFY THAT IT WILL FIT IN THE SPACE SHOWN ON THE DRAWINGS. MINOR DEVIATIONS IN DIMENSIONS WILL BE PERMITTED, PROVIDED THE RATINGS MEET THOSE SHOWN ON THE DRAWINGS AND EQUIPMENT WILL PHYSICALLY FIT INTO THE SPACE ALLOCATED WITH SUITABLE ACCESS AROUND EQUIPMENT FOR OPERATION AND MAINTENANCE OF THE EQUIPMENT. WHEN EQUIPMENT SUBMITTED FOR REVIEW DOES NOT MEET THE PHYSICAL SIZE OR ARRANGEMENT OF THAT SCHEDULED AND SPECIFIED, CONTRACTOR SHALL PAY FOR ANY AND ALL ALTERATIONS REQUIRED TO ACCOMMODATE SUCH EQUIPMENT AT NO ADDITIONAL COST TO THE VA. CONTRACTOR WILL ALSO PAY ALL COSTS FOR ADDITIONAL WORK REQUIRED BY OTHER CONTRACTORS, THE VA, ARCHITECT OR ENGINEER OF RECORD TO MAKE CHANGES WHICH WOULD ALLOW THE EQUIPMENT TO FIT IN THE SPACE AND FUNCTION AS INTENDED.

24. GENERAL CONTRACTOR MUST FIELD VERIFY SIZES, CAPACITIES, WEIGHTS, ETC. ON ALL EQUIPMENT. DISCREPANCIES ON DRAWINGS WILL NOT CONSTITUTE A BASIS FOR CHANGE ORDERS. VERIFY WITH ARCHITECT/ENGINEER AND COR IF ANY DISCREPANCIES EXIST.

25. IN THE CASE OF CONFLICTS OR DISCREPANCIES WITHIN OR AMONG THE CONTRACT DRAWINGS, THE BETTER QUALITY, MORE STRINGENT REQUIREMENTS OR GREATER QUANTITY OF WORK, AS DETERMINED BY THE GOVERNMENT, SHALL BE PROVIDED.

26. UNLESS INDICATED OTHERWISE, THE ARCHITECT/ENGINEER MAKES NO REPRESENTATION AS TO WHETHER OR NOT ANY HAZARDOUS OR CONTAMINATED MATERIALS (INCLUDING BUT NOT LIMITED TO ASBESTOS, PCB'S, LEAD, CONTAMINATED SOILS, ETC.) ARE PRESENT WITHIN THE EXISTING BUILDING OR ON THE SITE. WORK SHOWN ON THE DRAWINGS AND/OR INDICATED IN THE SPECIFICATIONS SHALL NOT BE CONSTRUED TO CALL FOR CONTACT WITH ANY OF THESE MATERIALS. IF THESE MATERIALS ARE ENCOUNTERED OR SUSPECTED, THE CONTRACTOR SHALL NOT DISTURB THEM AND SHALL CONTACT THE VA/COR IMMEDIATELY.

27. ALL OVERHEAD PLUMBING AND STORM DRAIN PIPING SHOULD BE ROUTED AROUND ALL MCR'S, TR'S, TE'S AND ANY ASSOCIATED COMMUNICATION SYSTEMS EQUIPMENT.

28. THE DESIGN OF THE PLUMBING SYSTEM WILL BE IN ACCORDANCE WITH THE LATEST EDITIONS OF THE FOLLOWING.
    - INTERNATIONAL PLUMBING CODE
    - AMERICAN WATER WORKS ASSOCIATION (AWWA)
    - VA PLUMBING DESIGN MANUAL DATED MAY 2018.

PLUMBING MATERIALS AND PROCEDURES NOTES

PLUMBING FIXTURE SCHEDULE

1. THE PLUMBING FIXTURE AND EQUIPMENT SCHEDULE, IN GENERAL, SPECIFIES THE PLUMBING FIXTURES, EQUIPMENT AND DEVICES: HOWEVER, UNLESS NOTED OTHERWISE, ALL FIXTURES SHALL BE PROVIDED WITH APPLICABLE ACCESSORIES (SUCH AS SUPPLY STOPS, WASTE TRAPS, FIXTURE MOUNTING SUPPORTS, BOLT CAPS, WATER CLOSET SEATS, ETC., AS REQ'D TO COMPLETE THE INSTALLATION.)
2. ALL ITEMS SPECIFIED HEREAFTER SHALL BE NEW, CLEANED AND ADJUSTED FOR THE SPECIFIED DESIGN PURPOSE (UNLESS OTHERWISE SPECIFIED).
3. ALL EQUIPMENT AND DEVICES SHALL BEAR AGA, NSF, ASME, ANSI, CSA OR UL APPROVED LABELS AND CERTIFICATIONS FOR THE SPECIFIED DESIGN PURPOSE.
4. PLUMBING CONTRACTOR SHALL VERIFY IN FIELD AND ARCHITECT ALL FINAL FIXTURE AND EQUIPMENT LOCATIONS AND MOUNTING HEIGHTS REQUIRED FOR THE DESIGN PURPOSE.
5. SUBMIT, AS PER THE SPECIFICATIONS, THE NUMBER OF COPIES OF EACH CATALOG CUT, FOR EACH ITEM, TO BE APPROVED BY THE OWNER AND SUCCESSFULLY REVIEWED BY THE ARCHITECT/ENGINEER (PRIOR TO THE BEGINNING OF CONSTRUCTION) FOR ALL NEW ITEMS SPECIFIED HEREAFTER.
6. THE CONTRACTOR SHALL SUBMIT EQUIPMENT CUTS FOR EACH PIECE OF EQUIPMENT PRIOR TO ORDERING. SUBMIT, AS PER THE SPECIFICATIONS, THE NUMBER OF COPIES FOR APPROVAL BY THE OWNER AND SUCCESSFUL REVIEW BY THE ARCHITECT/ENGINEER. THIS CONTRACTOR SHALL ALSO ASSEMBLE PRINTED INSTRUCTIONS FOR THE OPERATION AND MAINTENANCE OF EACH ITEM INSTALLED AND BIND TOGETHER WITH EQUIPMENT CUTS AND CONTROL WIRING DIAGRAMS.
7. FIXTURES NOTED TO BE FURNISHED BY VA SHALL BE INSTALLED BY PLUMBING CONTRACTOR, ALL OTHER FIXTURES SHALL BE PROVIDED BY PLUMBING CONTRACTOR.

PROCEDURES

1. ALL SUSPENDED HORIZONTAL PIPING SHALL BE SUPPORTED BY HANGERS SPACED NO FURTHER THAN 8' - 0" APART. NO PIPING SHALL BE SELF-SUPPORTING NOR BE SUPPORTED FROM EQUIPMENT CONNECTIONS.
2. ALL PARALLEL PIPES (TWO(2) OR MORE) SHALL BE SUPPORTED ON A CHANNEL TYPE TRAPEZE HANGER.
3. SUPPORTS AND HANGERS SHALL BE INSTALLED TO PERMIT FREE EXPANSION AND CONTRACTION IN PIPING SYSTEMS UNLESS PIPE REQUIRES FIRM ANCHOR CONTROL.
4. HORIZONTAL SOIL OR WASTE LINES SHALL BE AT A SLOPE OF NOT LESS THAN 1/8" PER FOOT AND SHALL BE HELD CLOSE TO THE CONSTRUCTION TO MAINTAIN A MAXIMUM OF HEAD ROOM. ALL CHANGES OF DIRECTION AND JUNCTIONS SHALL BE MADE WITH "Y" FITTINGS AND 1/8" BENDS. NO LINES OF ANY KIND SHALL BE LOCATED BELOW FREEZERS. ALL DRAIN LINES SHALL BE PROTECTED FROM FREEZING.
5. HOT AND COLD WATER PIPING SHALL BE PROPERLY PITCHED TO LOW POINTS IN THE SYSTEM WHERE DRAINS SHALL BE INSTALLED.
6. CLEANOUTS SHALL BE PLACED AT ALL DEAD ENDS, AT 90° CHANGES OF DIRECTION, AT 50'-0" INTERVALS ON HORIZONTAL RUNS, OUT OF HIGH TRAFFIC AREAS, (NOT UNDER CASES) ETC. WHERE CLEANOUTS OCCUR IN CONCEALED SPACES, THEY SHALL BE PROVIDED WITH EXTENSIONS TO FLOOR ABOVE OR TO WALLS. A HAND-HOLE TEST TEE SHALL BE PLACED AT THE BASE OF EACH STACK.
7. VENT STACKS EXTENDING UP THROUGH THE ROOF SHALL BE FLASHED WITH SIX POUND SHEET LEAD. FLASHING SHALL EXTEND 12" IN ALL DIRECTIONS FROM THE VENT, CARRIED OVER AND TURNED DOWN THE INSIDE OF THE VENT. ALL SEAMS AND JOINTS OF FLASHING SHALL BE SOLDERED AND PROVEN WEATHERTIGHT. EXTEND VENTS A MIN. OF 12" ABOVE ROOF, AND 30" AWAY FROM PARAPET.
8. ALL SUPPLY PIPING TO BE RUN OVERHEAD, UNLESS NOTED OTHERWISE.
9. ALL SUPPLY PIPING TO BE A MINIMUM OF 3/4" DIA.
10. EACH FIXTURE WILL HAVE A 1/2" X 12" AIR CHAMBER.
11. PROVIDE SERVICE VALVE AT BRANCHES AND AT ALL APPLIANCES.
12. ALL FIXTURES WILL BE FURNISHED WITH INTEGRAL STOPS.
13. ALL FLOOR DRAINS AND FIXTURES TO BE VENTED IN ACCORDANCE WITH ALL LOCAL, STATE AND FEDERAL CODES AND REGULATIONS.
14. ALL HORIZONTAL VENT PIPING SHALL BE RUN ABOVE FINISHED CEILINGS AND SLOPED UP TOWARD MAIN STACK.
15. THE PLUMBING CONTRACTOR WILL NOT INSTALL COMBUSTIBLE PIPING MATERIAL IN OR THROUGH FIRE RATED ASSEMBLIES.
16. ALL EQUIPMENT DEVICES SHALL BE INSTALLED WITH UNIONS IN SUCH A MANNER TO FACILITATE EASY REMOVAL AND MAINTENANCE OF EQUIPMENT WITHOUT DISRUPTING SERVICE AND CAUSING MAJOR PIPING REVISIONS.
17. ALL CONNECTIONS BETWEEN DISSIMILAR METALS SHALL BE MADE WITH DIELECTRIC UNIONS OR COUPLINGS.

PLUMBING SYMBOL LIST

SYMBOL	DESCRIPTION
(A)	ABANDON IN PLACE
A/E	ARCHITECT / ENGINEER
AFF	ABOVE FINISH FLOOR
AS	AIR SEPARATOR
BFP	BACKFLOW PREVENTER
BOD	BASIS OF DESIGN
CD	CONDENSATE DRAIN
CI	CAST IRON
CO	CLEANOUT
CW	DOMESTIC COLD WATER
(D)	DEMOLISH
DN	DOWN
(E)	EXISTING TO REMAIN
EL	ELEVATION
EWC	ELECTRIC WATER COOLER
FBO	FURNISHED BY OTHERS, INSTALLED BY PLUMBING CONTRACTOR
FCO	FLOOR CLEANOUT
FD	FLOOR DRAIN
FT	FLOOR TROUGH
G	GAS
HW	DOMESTIC HOT WATER
HWC	HOT WATER CIRCULATION
LAV	LAVATORY
MB	MOP BASIN
SAN	SANITARY
SK	SINK
ST	STORM
TYP	TYPICAL
UR	URINAL
VAC	VACUUM
VB	VACUUM BREAKER (ATMOSPHERIC)
V	VENT
VTR	VENT THRU ROOF
WC	WATER CLOSET
WCO	WALL CLEANOUT
	CAP
	DIRECTION OF FLOW
	CLEANOUT
	CONTINUATION
	RISER DOWN
	RISER UP
	BACK FLOW PREVENT (BFP)
	CONNECT TO EXISTING (NEW CONNECTION)
	POINT OF DEMOLITION
	UNION
	VALVE
	BALL VALVE
	BALANCING VALVE
	CHECK VALVE (DIRECTION OF FLOW)
	VACUUM BREAKER
	HOSE BIBB
	EQUIPMENT TAG
	EQUIPMENT (PROVIDED BY OTHERS)
X / X	EXISTING RISER TAG

THESE LISTS OF SYMBOLS AND ABBREVIATIONS ARE GENERAL. NOT ALL SYMBOLS AND ABBREVIATIONS MY BE APPLICABLE TO THIS PROJECT.

Revisions:	Date:
100% CONSTRUCTION + BID DRAWINGS	10/06/2023
100% CONSTRUCTION + BID DRAWINGS	09/28/2023
95% CONSTRUCTION DOCUMENTS	09/01/2023
65% DESIGN DEVELOPMENT	07/27/2023

CONSULTANT

ARCHITECT/ENGINEER OF RECORD

BANCROFT ARCHITECTS + ENGINEERS
3300 Dundee Rd.
Northbrook, IL 60062
T: 847.952.9362
www.bancroft-ae.com
VA CONTRACT NO.36C77623C0052
Bancroft Project No. 22-131

STAMP

LICENSED PROFESSIONAL ENGINEER
RAED HAMID
062.065548
OF ILLINOIS
10-06-2023

Office of Construction and Facilities Management

VA U.S. Department of Veterans Affairs

REVIEW ONLY - NOT FOR CONSTRUCTION

Drawing Title	PLUMBING - GENERAL NOTES, SYMBOLS AND ABBREVIATIONS
Phase	100% CONSTRUCTION DOCUMENTS - FOR BID
Project Title	EHRM-TASS
Project Number	586-22-703
Building Number	5
Approved: Project Director	
Location	G.V. (Sonny) Montgomery VAMC
Issue Date	10/06/2023
Checked	RH
Drawn	HS
Drawing Number	P-001

VA FORM 08-6231

PLUMBING DEMOLITION KEYNOTES

1. EXISTING SAN/CRP PIPING RISER SERVING 4TH FLOOR TO REMAIN IN PLACE.
2. EXISTING VENT PIPING RISERS TO REMAIN IN PLACE.
3. CUT AND CAP EXISTING CRP PIPING SHOWN DASHED BACK TO RISER LEAVING NO DEAD LEGS.
4. EXISTING 3/4"CW, 1 1/4"HW, 3/4"G, 3/4"VAC AND 3/4"AIR RISERS IN CHASE TO REMAIN IN PLACE.
5. CUT BACK AND REMOVE EXISTING SAN PIPING AT THIS POINT AND READY PIPING TO BE CONNECTED TO NEW.
6. EXISTING CW, HW/HWR, SAN AND VENT RISERS IN CHASE SERVING MOP BASIN TO REMAIN IN PLACE.
7. DISCONNECT AND REMOVE ALL EXISTING PIPING SHOWN DASHED AND ALL ASSOCIATED HANGERS, SUPPORTS AND INSULATION
8. DISCONNECT EXISTING PIPING FROM FIXTURE ABOVE. REMOVE ALL EXISTING PIPING AS SHOWN DASHED AND ALL ASSOCIATED HANGERS, SUPPORTS AND INSULATION.
9. EXISTING 4"CW, 1 1/4"HW DN AND 1 1/2"HW UP PIPING RISER TO REMAIN IN PLACE.
10. EXISTING 2"CW AND 1 1/4"HW PIPING RISER TO REMAIN IN PLACE.
11. CUT SAN PIPING AT CELING. READY PIPING TO BE OFFSET AT NEW LOCATION TO BE ROUTED TO FLOOR ABOVE.

PLUMBING DEMOLITION GENERAL NOTES

A. CONTRACTOR TO COORDINATE WITH VA COR FOR ALL PLUMBING SERVICE OUTAGES.

B. EXISTING PIPING SHOWN ON THIS DRAWING WAS BASED ON AS-BUILT DOCUMENTATION PROVIDED BY THE VA AND A CURSORY ON SITE REVIEW OF EXISTING CONDITIONS. IF IT IS DISCOVERED THAT ANY PIPING INDICATED TO BE DEMOLISHED, SERVES OTHER AREAS BEYOND THIS PROJECT SCOPE, THE CONTRACTOR MUST BE IMMEDIATELY STOP DEMOLITION OF SAID PIPING, NOTIFY TGHE COR AND ENGINEER AND WAIT FOR FURTHER INSTRUCTION.

C. CONTRACTOR SHALL BE RESPONSIBLE FOR ANY DAMAGE TO FINISHES OR COMPONENTS NOT SCHEDULED FOR DEMOLITION. DAMAGED ITEMS SHALL BE REPLACED OR REPAIRED TO MEET OR EXCEED FORMER CONDITIONS.

D. GENERAL CONTRACTOR IS RESPONSIBLE FOR REMOVAL AND REPLACEMENT OF CEILING, CEILING TILES, AND CEILING GRIDS ASSOCIATED WITH AREAS OF WORK BY ALL CONTRACTORS. ALL EXISTING MOUNTED ITEMS SHALL BE REMOVED, STORED, AND REINSTALLED IN SAME LOCATION. COORDINATE WITH OTHER TRADES.

E. PATCH AND FILL CONCRETE SLAB WHERE DOMESTIC WATER, SANITARY AND VENT PIPING HAVE BEEN REMOVED OR PLUGGED.

F. ABANDONED AND/OR DEAD LEG DOMESTIC WATER PIPING WILL NOT BE ALLOWED AND SHALL BE REMOVED EVEN IF NOT SHOWN ON DRAWINGS.

G. ALL PENETRATIONS SHALL BE SEALED WITH FIRE PROOFING.

PLUMBING DEMOLITION GENERAL NOTES

H. ALL PENETRATIONS SHALL BE SEALED WITH FIRE PROOFING.

I. ALL DOMESTIC PIPING BEING DEMOLISHED TO MAIN SHALL BE CAPPED AT 1.5X THE DIAMETER OF BRANCH PIPING. NO DEAD END OR STUBS ARE ALLOWED IN DOMESTIC WATER PIPING. ALL DEAD END PIPING MUST BE CAPPED.

J. REMOVE ALL ASSOCIATED VALVING, CLAMPS, HANGERS, SUPPORTS, ETC., ASSOCIATED WITH PIPING REMOVAL.

K. CONTRACTOR IS RESPONSIBLE FOR ALL MODIFICATIONS TO THE EXISTING PIPING NECESSARY TO PERMIT THE INSTALLATION OF NEW WORK.

L. ALL ASSOCIATED PIPING SHALL INCLUDE BUT NOT BE LIMITED TO CW, HW, HWC, SANITARY, AND VENT PIPING.

M. REMOVE EXISTING CONCRETE FLOOR SLAB TO ACCOMMODATE UNDERGROUND PLUMBING WORK. ASSUME 12 INCH SLAB THROUGH OUT THE KITCHEN, VERIFY ACTUAL THICKNESS.

O. COORDINATE CONCRETE FLOOR SLAB REMOVAL AND REPLACEMENT WORK WITH ARCHITECTURAL AND STRUCTURAL REQUIREMENTS. NEW CONCRETE FLOOR SLAB WORK SHALL BE PERFORMED AS EARLY AS POSSIBLE IN THE PROJECT SCHEDULE TO ALLOW FOR THE PROPER CURING TIME REQUIRED TO RECEIVE THE NEW FLOOR FINISHES.

P. EXISTING SANITARY AND VENT SHOWN ON THIS SHEET SERVES FIXTURES ON 4TH FLOOR.

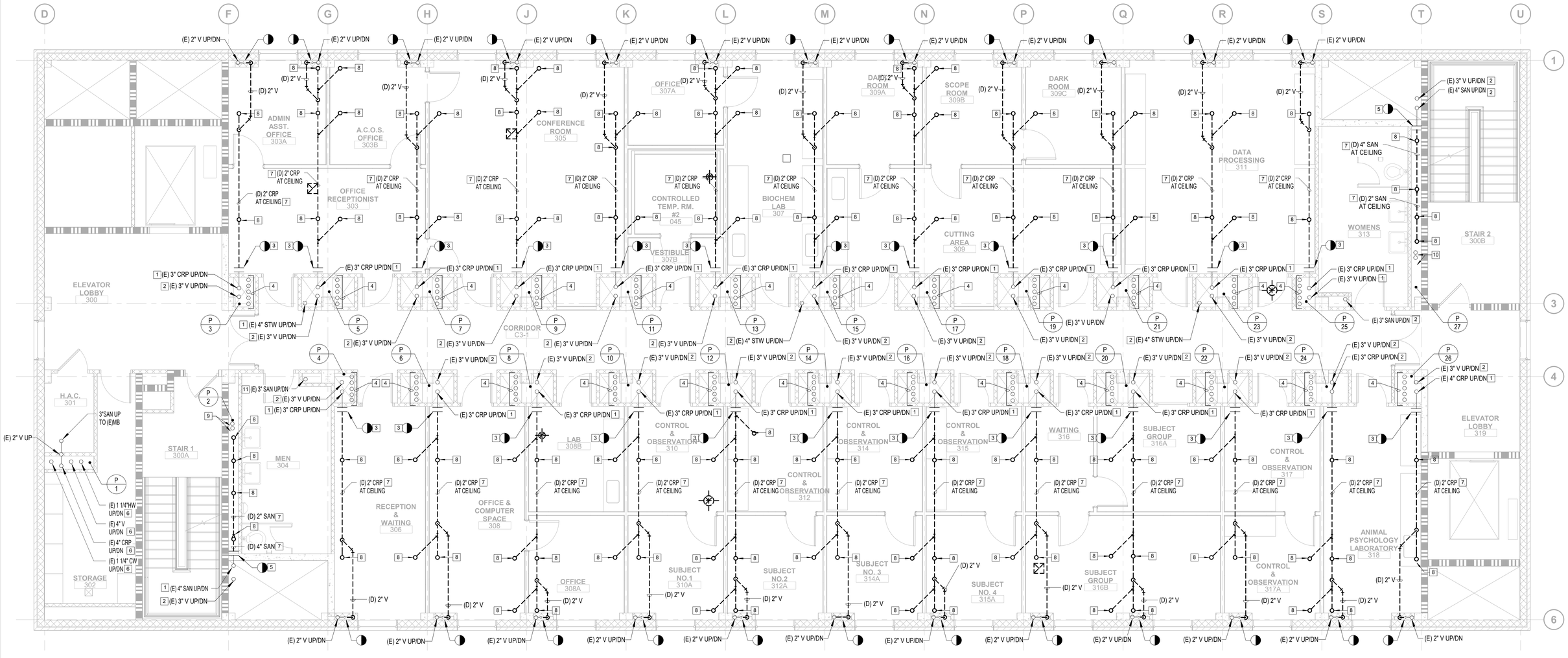

N

1 **PLUMBING - 3RD FLOOR DEMO PLAN**

1/4" = 1'-0"

REVIEW ONLY - NOT FOR CONSTRUCTION

100% CONSTRUCTION + BID DRAWINGS	10/06/2023
100% CONSTRUCTION + BID DRAWINGS	09/28/2023
95% CONSTRUCTION DOCUMENTS	09/01/2023
65% DESIGN DEVELOPMENT	07/27/2023
Revisions:	Date:

CONSULTANT

ARCHITECT/ENGINEER OF RECORD

BANCROFT ARCHITECTS + ENGINEERS
3300 Dundee Rd.
Northbrook, IL 60062
T: 847.952.9362
www.bancroft-ae.com
VA CONTRACT NO.36C77623C0052
Bancroft Project No. 22-131

STAMP

LICENSED PROFESSIONAL ENGINEER RAED HAMID 062.065548 OF ILLINOIS
10-06-2023

Office of Construction and Facilities Management

VA U.S. Department of Veterans Affairs

Drawing Title: PLUMBING DEMOLITION PLAN - LEVEL 3

Approved: Project Director

Phase: 100% CONSTRUCTION DOCUMENTS - FOR BID

Project Title: EHRM-TASS

Project Number: 586-22-703

Building Number: 5

Location: G.V. (Sonny) Montgomery VAMC

Issue Date: 10/06/2023

Checked: RH

Drawn: HS

Drawing Number: PD103

VA FORM 08-6231

PLUMBING DEMOLITION KEYNOTES

1. EXISTING SAN/CRP PIPING RISER SERVING 4TH FLOOR TO BE REMAIN IN PLACE.
2. EXISTING VENT PIPING AND RISERS TO REMAIN AS IS UNLESS NOTED OTHERWISE.
3. EXISTING 3/4"CW, 1 1/4"HW, 3/4"G, 3/4"VAC AND 3/4"AIR RISER IN CHASE TO REMAIN IN PLACE.
4. DISCONNECT AND REMOVE EXISTING GAS NOZZLES AND ALL ASSOCIATED LAB GAS PIPING. CUT PIPING BACK TO QUICK DISCONNECT.
5. DISCONNECT AND REMOVE EXISTING LAB SINK/SINK AND ASSOCIATED CW AND HW PIPING AND FAUCET. CUT PIPING BACK TO QUICK DISCONNECT. REFER TO DETAILS FOR MORE INFORMATION.
6. DISCONNECT AND REMOVE EXISTING 2"CRP PIPING SERVING FUME HOOD AND CUT BACK TO CRP MAIN.
7. DISCONNECT AND REMOVE AND REMOVE EXISTING 2"CRP PIPING SERVING LAB SINK/SINK AND CUT BACK TO MAIN.
8. DISCONNECT AND REMOVE EXISTING EMERGENCY EYE WASH AND ALL ASSOCIATED PIPING AND CUT BACK TO QUICK DISCONNECT.
9. DISCONNECT AND REMOVE EXISTING 2"CRP PIPING SERVING EMERGENCY EYE WASH SINK AND CUT PIPING BACK TO CRP MAIN.
10. DISCONNECT AND REMOVE EXISTING CAP AND ASSOCIATED 2"CRP PIPING STUB AND CUT BACK TO CRP MAIN.
11. DISCONNECT AND REMOVE EXISTING FLOOR DRAIN AND CUT BACK 2"CRP PIPING BACK TO MAIN.

PLUMBING DEMOLITION KEYNOTES

12. DISCONNECT AND REMOVE EXISTING VENT PIPING SERVING EXISTING FIXTURES AND REMOVE ALL EXISTING VENT PIPING AS SHOWN DASHED.
13. DISCONNECT AND REMOVE EXISTING WATER CLOSET AND ALL ASSOCIATED PIPING AND HANGERS.
14. DISCONNECT AND REMOVE EXISTING LAVATORY AND ALL ASSOCIATED PIPING AND HANGERS. CUT BACK AND CAP ALL EXISTING PIPING SERVING WATER COOLER BACK TO RISERS LEAVING NO DEAD LEGS.
15. DISCONNECT AND REMOVE EXISTING URINAL AND ALL ASSOCIATED PIPING AND HANGERS.
16. EXISTING EXPOSED STUB PIPING TO REMAIN IN PLACE.
17. DISCONNECT AND REMOVE EXISTING WATER COOLER/BOTTLE FILLER AND ASSOCIATED HANGERS. CUT BACK PIPING TO MAIN AND READY PIPING TO BE RECONNECTED TO NEW.
18. CUT BACK AND REMOVE EXISTING DOMESTIC WATER PIPING SERVING LAVATORY, URINAL AND WATER CLOSET AND READY PIPING TO BE RECONNECTED TO NEW.
19. EXISTING RISERS SERVING MOP BASIN IN CHASE TO REMAIN IN PLACE.
20. DISCONNECT AND REMOVE 3"SAN PIPING RISER SERVING THIS FLOOR. READY PIPING TO BE OFFSET TO NEW LOCATON AND CONNECT BACK TO 3"SAN ON CEILING.

PLUMBING DEMOLITION GENERAL NOTES

A. CONTRACTOR TO COORDINATE WITH VA COR FOR ALL PLUMBING SERVICE OUTAGES.

B. EXISTING PIPING SHOWN ON THIS DRAWING WAS BASED ON AS-BUILT DOCUMENTATION PROVIDED BY THE VA AND A CURSORY ON SITE REVIEW OF EXISTING CONDITIONS. IF IT IS DISCOVERED THAT ANY PIPING INDICATED TO BE DEMOLISHED, SERVES OTHER AREAS BEYOND THIS PROJECT SCOPE, THE CONTRACTOR MUST BE IMMEDIATELY STOP DEMOLITION OF SAID PIPING, NOTIFY TGHE COR AND ENGINEER AND WAIT FOR FURTHER INSTRUCTION.

C. CONTRACTOR SHALL BE RESPONSIBLE FOR ANY DAMAGE TO FINISHES OR COMPONENTS NOT SCHEDULED FOR DEMOLITION. DAMAGED ITEMS SHALL BE REPLACED OR REPAIRED TO MEET OR EXCEED FORMER CONDITIONS.

D. GENERAL CONTRACTOR IS RESPONSIBLE FOR REMOVAL AND REPLACEMENT OF CEILING, CEILING TILES, AND CEILING GRIDS ASSOCIATED WITH AREAS OF WORK BY ALL CONTRACTORS. ALL EXISTING MOUNTED ITEMS SHALL BE REMOVED, STORED, AND REINSTALLED IN SAME LOCATION. COORDINATE WITH OTHER TRADES.

E. PATCH AND FILL CONCRETE SLAB WHERE DOMESTIC WATER, SANITARY AND VENT PIPING HAVE BEEN REMOVED OR PLUGGED.

F. ABANDONED AND/OR DEAD LEG DOMESTIC WATER PIPING WILL NOT BE ALLOWED AND SHALL BE REMOVED EVEN IF NOT SHOWN ON DRAWINGS.

G. ALL PENETRATIONS SHALL BE SEALED WITH FIRE PROOFING.

PLUMBING DEMOLITION GENERAL NOTES

H. ALL PENETRATIONS SHALL BE SEALED WITH FIRE PROOFING.

I. ALL DOMESTIC PIPING BEING DEMOLISHED TO MAIN SHALL BE CAPPED AT 1.5X THE DIAMETER OF BRANCH PIPING. NO DEAD END OR STUBS ARE ALLOWED IN DOMESTIC WATER PIPING. ALL DEAD END PIPING MUST BE CAPPED.

J. REMOVE ALL ASSOCIATED VALVING, CLAMPS, HANGERS, SUPPORTS, ETC., ASSOCIATED WITH PIPING REMOVAL.

K. CONTRACTOR IS RESPONSIBLE FOR ALL MODIFICATIONS TO THE EXISTING PIPING NECESSARY TO PERMIT THE INSTALLATION OF NEW WORK.

L. ALL ASSOCIATED PIPING SHALL INCLUDE BUT NOT BE LIMITED TO CW, HW, HWC, SANITARY, AND VENT PIPING.

M. REMOVE EXISTING CONCRETE FLOOR SLAB TO ACCOMMODATE UNDERGROUND PLUMBING WORK. ASSUME 12 INCH SLAB THROUGH OUT THE KITCHEN, VERIFY ACTUAL THICKNESS.

O. COORDINATE CONCRETE FLOOR SLAB REMOVAL AND REPLACEMENT WORK WITH ARCHITECTURAL AND STRUCTURAL REQUIREMENTS. NEW CONCRETE FLOOR SLAB WORK SHALL BE PERFORMED AS EARLY AS POSSIBLE IN THE PROJECT SCHEDULE TO ALLOW FOR THE PROPER CURING TIME REQUIRED TO RECEIVE THE NEW FLOOR FINISHES.

P. EXISTING SANITARY AND VENT SHOWN ON THIS SHEET SERVES FIXTURES ON 4TH FLOOR.

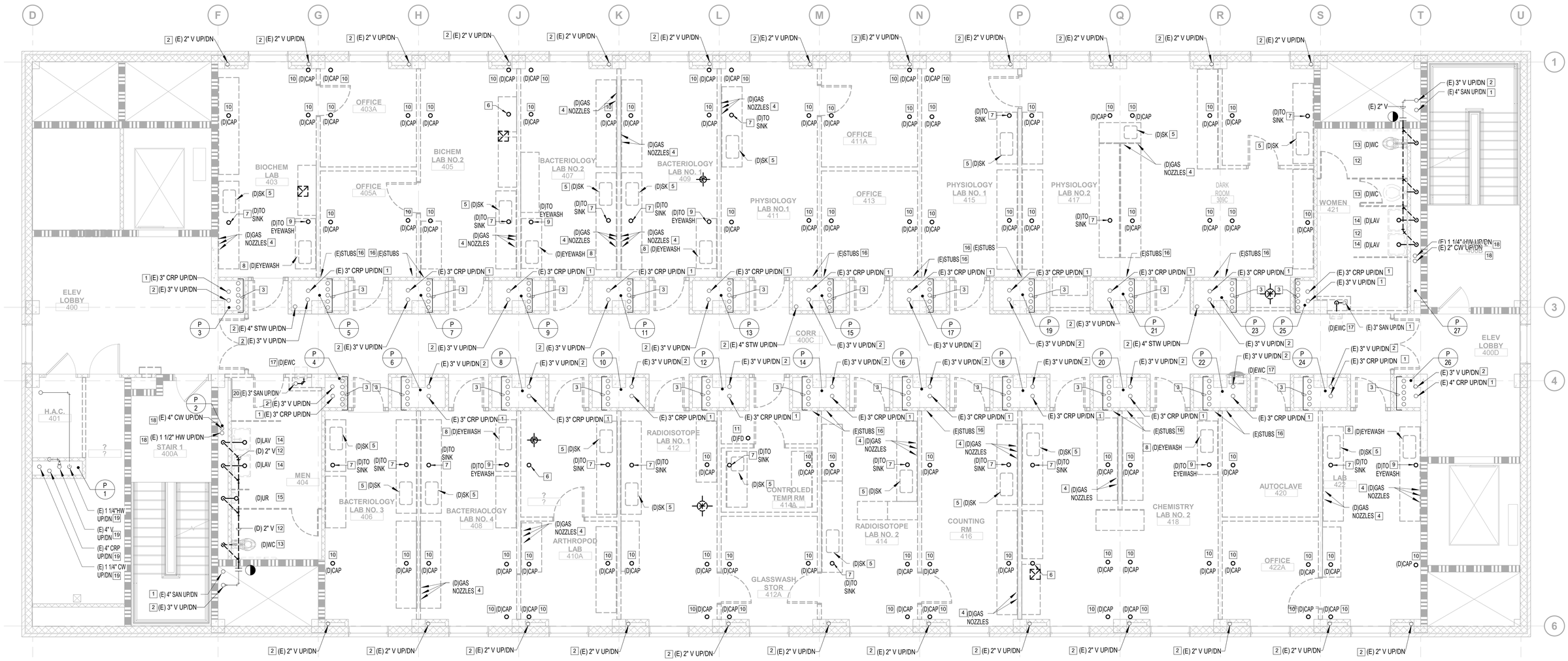

N

18 PLUMBING - 4TH FLOOR DEMO PLAN

1/4" = 1'-0"

REVIEW ONLY - NOT FOR CONSTRUCTION

100% CONSTRUCTION + BID DRAWINGS	10/06/2023
100% CONSTRUCTION + BID DRAWINGS	09/28/2023
95% CONSTRUCTION DOCUMENTS	09/01/2023
65% DESIGN DEVELOPMENT	07/27/2023
Revisions:	Date:

CONSULTANT

ARCHITECT/ENGINEER OF RECORD

BANCROFT ARCHITECTS + ENGINEERS
3300 Dundee Rd.
Northbrook, IL 60062
T: 847.932.9362
www.bancroft-ae.com
VA CONTRACT NO.36C77623C0052
Bancroft Project No. 22-131

STAMP

LICENSED PROFESSIONAL ENGINEER RAED HAMID 062.005548 OF ILLINOIS
10-06-2023

Office of Construction and Facilities Management

VA U.S. Department of Veterans Affairs

Drawing Title: PLUMBING DEMOLITION PLAN - LEVEL 4

Phase: 100% CONSTRUCTION DOCUMENTS - FOR BID

Project Title: EHRM-TASS

Project Number: 586-22-703

Building Number: 5

Approved: Project Director

Location: G.V. (Sonny) Montgomery VAMC

Issue Date: 10/06/2023 | Checked: RH | Drawn: HS

Drawing Number: PD104

VA FORM 08-6231

PLUMBING KEYNOTES

1. EXISTING SAN/CRP PIPING RISER SERVING 4TH FLOOR TO REMAIN IN PLACE.
2. EXISTING VENT PIPING RISER TO REMAIN IN PLACE.
3. EXISTING 3/4"CW, 1 1/4"HW, 3/4"G, 3/4"VAC AND 3/4"AIR RISERS IN UTILITY CHASE TO REMAIN IN PLACE.
4. EXISTING PIPING RISERS SERVING MOP BASIN IN CHASE TO REMAIN IN PLACE.
5. EXISTING 4"CW AND 1 1/4"HW PIPING RISER TO REMAIN IN PLACE.
6. EXISTING 2"CW AND 1 1/4"HW PIPING RISER TO REMAIN IN PLACE.
7. CONNECT AND EXTEND 4"SAN PIPING AND CONNECT TO FIXTURES AS SHOWN.
8. EXISTING STORM RISER IN UTILITY CHASE TO REMAIN IN PLACE.
9. CONNECT AND EXTEND 2"SAN PIPING AND CONNECT TO SINK ABOVE.

PLUMBING GENERAL NOTES

A. CONTRACTOR TO COORDINATE WITH VA COR FOR ALL PLUMBING SERVICE OUTAGES.

B. EXISTING CONDITIONS ARE SHOWN BASED ON INFORMATION OBTAINED FROM FIELD SURVEYS, EXISTING BUILDING DOCUMENTS, AND STAFF. VERIFY EXISTING CONDITIONS AND REPORT ANY CONFLICTS BEFORE PROCEEDING.

C. CONTRACTOR IS RESPONSIBLE FOR ALL MODIFICATIONS TO THE EXISTING PIPING NECESSARY TO PERMIT THE INSTALLATION OF NEW WORK.

D. REFER TO PLUMBING FIXTURE ROUGH-IN SCHEDULE FOR BRANCH CONNECTION TO FIXTURE.

E. ALL ASSOCIATED PIPING SHALL INCLUDE BUT NOT BE LIMITED TO CW, HW,, SANITARY, CRS AND VENT PIPING.

F. ALL EXISTING FIXTURES SHOWN ON THE 3RD FLOOR ARE TO REMAIN AS IS.

G. ACCESS SHALL BE PROVIDED SUCH THAT PLUMBING COMPONENTS SHALL BE READILY SERVICEABLE, FOR ALL COMPONENTS THAT REQUIRE OPERATING, CLEANING, SERVICING, MAINTENANCE, AND CALIBRATION. SUCH COMPONENTS INCLUDES, BUT IS NOT LIMITED TO MANUAL VALVES, CHECK VALVES, BALANCING VALVES, ETC.

PLUMBING GENERAL NOTES

H. ALL DOMESTIC WATER PIPING SHALL BE 3/4"∅ MINIMUM AND ALL VENT PIPING SHALL BE 2"∅ MINIMUM UNLESS OTHERWISE NOTED.

I. ALL MEDICAL GAS PIPING TO BE 3/4" MINIMUM UNLESS OTHERWISE NOTED.

J. ALL PENETRATIONS SHALL BE SEALED WITH FIRE PROOFING.

K. ROUTE HOT WATER CIRCULATION PIPING DOWN WALL AND CONNECT 24" FROM PLUMBING FIXTURE OR AS CLOSE AS POSSIBLE.

L. COORDINATE CONCRETE FLOOR SLAB AND REPLACEMENT WORK WITH ARCHITECTURAL AND STRUCTURAL REQUIREMENTS. NEW CONCRETE FLOOR SLAB WORK SHALL BE PERFORMED AS EARLY AS POSSIBLE IN THE PROJECT SCHEDULE TO ALLOW FOR THE PROPER CURING TIME REQUIRED THE NEW FLOOR FINISHES.

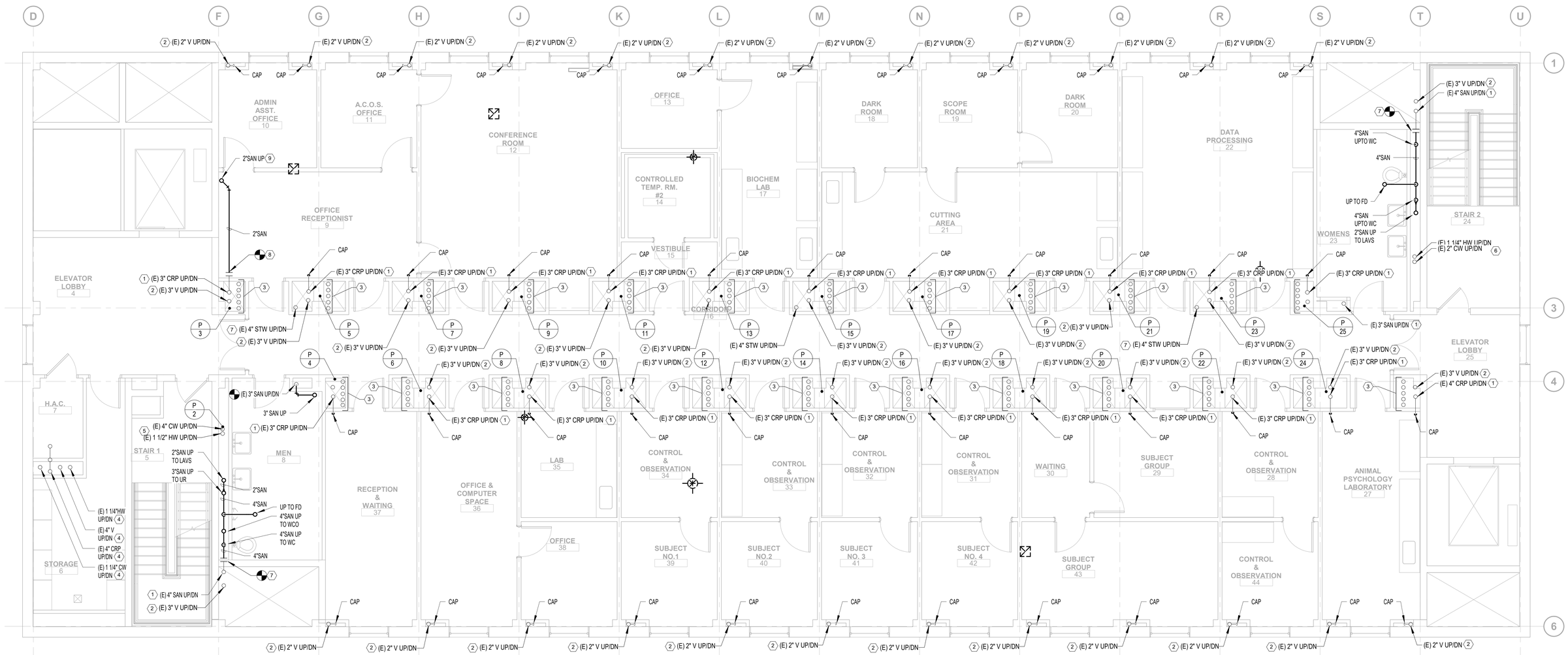

N

1 **PLUMBING - 3RD FLOOR PLAN**

1/4" = 1'-0"

REVIEW ONLY - NOT FOR CONSTRUCTION

100% CONSTRUCTION + BID DRAWINGS	09/28/2023
95% CONSTRUCTION DOCUMENTS	09/01/2023
65% DESIGN DEVELOPMENT	07/27/2023
Revisions:	Date:

CONSULTANT

ARCHITECT/ENGINEER OF RECORD

BANCROFT ARCHITECTS + ENGINEERS
3300 Dundee Rd.
Northbrook, IL 60062
T: 847.952.9362
www.bancroft-ae.com
VA CONTRACT NO.36C77623C0052
Bancroft Project No. 22-131

STAMP

LICENSED PROFESSIONAL ENGINEER RAED HAMID 062.065548 OF ILLINOIS
10-06-2023

Office of Construction and Facilities Management

VA U.S. Department of Veterans Affairs

Drawing Title: PLUMBING PLAN - LEVEL 3	Phase: 100% CONSTRUCTION DOCUMENTS - FOR BID	Project Title: EHRM-TASS	Project Number: 586-22-703
Approved: Project Director		Location: G.V. (Sonny) Montgomery VAMC	Building Number: 5
		Issue Date: 09/28/2023 · Checked: RH · Drawn: HS	Drawing Number: P-103

VA FORM 08-6231

PLUMBING KEYNOTES

1. EXISTING SAN/CRP PIPING RISER SERVING 4TH FLOOR TO REMAIN IN PLACE.
2. EXISTING VENT PIPING RISER TO REMAIN IN PLACE.
3. EXISTING 3/4"CW, 1 1/4"HW, 3/4"G, 3/4"VAC AND 3/4"AIR RISERS IN UTILITY CHASE TO REMAIN IN PLACE.
4. EXISTING PIPING STUBS TO REMAIN IN PLACE.
5. EXISTING PIPING RISERS SERVING MOP BASIN IN CHASE TO REMAIN IN PLACE.
6. EXTEND AND CONNECT 2"SAN FROM FLOOR BELOW AND CONNECT TO SINK.
7. EXTEND AND CONNECT 1/2"CW AND 1/2"HW FROM UTILITY CHASE WALL STUBS. PROVIDE TMV BEFORE CONNECTION TO FIXTURE. REFER TO HOSE CONNECTION AT DISCONNECT COUPLING FOR FIXTURES DETAIL FOR MORE INFORMATION.
8. EXTEND 2"V FROM SINK AND CONNECT TO EXISTING VENT PIPING IN UTILITY CHASE.
9. EXTEND 2"SAN FROM UTILITY CHASE AND CONNECT TO ELECTRIC WATER COOLER. EXTEND AND CONNECT 2"V PIPING CONNECT TO EXISTING VENT PIPING RISER.
10. EXTEND 4"SAN AND 1 1/4"CW PIPING AND CONNECT TO WATER CLOSET.
11. EXTEND 4"SAN AND 3/4"CW PIPING AND CONNECT TO URINAL.
12. EXTEND 2"SAN, 1/2"CW AND 1/2"HW AND CONNECT TO LAVATORIES.
13. EXTEND 3"SAN AND CONNECT TO FLOOR DRAIN. PROVIDE TRAP PRIMER.

PLUMBING GENERAL NOTES

A. CONTRACTOR TO COORDINATE WITH VA COR FOR ALL PLUMBING SERVICE OUTAGES.

B. EXISTING CONDITIONS ARE SHOWN BASED ON INFORMATION OBTAINED FROM FIELD SURVEYS, EXISTING BUILDING DOCUMENTS, AND STAFF. VERIFY EXISTING CONDITIONS AND REPORT ANY CONFLICTS BEFORE PROCEEDING.

C. CONTRACTOR IS RESPONSIBLE FOR ALL MODIFICATIONS TO THE EXISTING PIPING NECESSARY TO PERMIT THE INSTALLATION OF NEW WORK.

D. REFER TO PLUMBING FIXTURE ROUGH-IN SCHEDULE FOR BRANCH CONNECTION TO FIXTURE.

E. ALL ASSOCIATED PIPING SHALL INCLUDE BUT NOT BE LIMITED TO CW, HW,, SANITARY, CRS AND VENT PIPING.

F. ALL EXISTING FIXTURES SHOWN ON THE 3RD FLOOR ARE TO REMAIN AS IS.

G. ACCESS SHALL BE PROVIDED SUCH THAT PLUMBING COMPONENTS SHALL BE READILY SERVICEABLE, FOR ALL COMPONENTS THAT REQUIRE OPERATING, CLEANING, SERVICING, MAINTENANCE, AND CALIBRATION. SUCH COMPONENTS INCLUDES, BUT IS NOT LIMITED TO MANUAL VALVES, CHECK VALVES, BALANCING VALVES, ETC.

PLUMBING GENERAL NOTES

H. ALL DOMESTIC WATER PIPING SHALL BE 3/4"∅ MINIMUM AND ALL VENT PIPING SHALL BE 2"∅ MINIMUM UNLESS OTHERWISE NOTED.

I. ALL MEDICAL GAS PIPING TO BE 3/4" MINIMUM UNLESS OTHERWISE NOTED.

J. ALL PENETRATIONS SHALL BE SEALED WITH FIRE PROOFING.

K. ROUTE HOT WATER CIRCULATION PIPING DOWN WALL AND CONNECT 24" FROM PLUMBING FIXTURE OR AS CLOSE AS POSSIBLE.

L. COORDINATE CONCRETE FLOOR SLAB AND REPLACEMENT WORK WITH ARCHITECTURAL AND STRUCTURAL REQUIREMENTS. NEW CONCRETE FLOOR SLAB WORK SHALL BE PERFORMED AS EARLY AS POSSIBLE IN THE PROJECT SCHEDULE TO ALLOW FOR THE PROPER CURING TIME REQUIRED THE NEW FLOOR FINISHES.

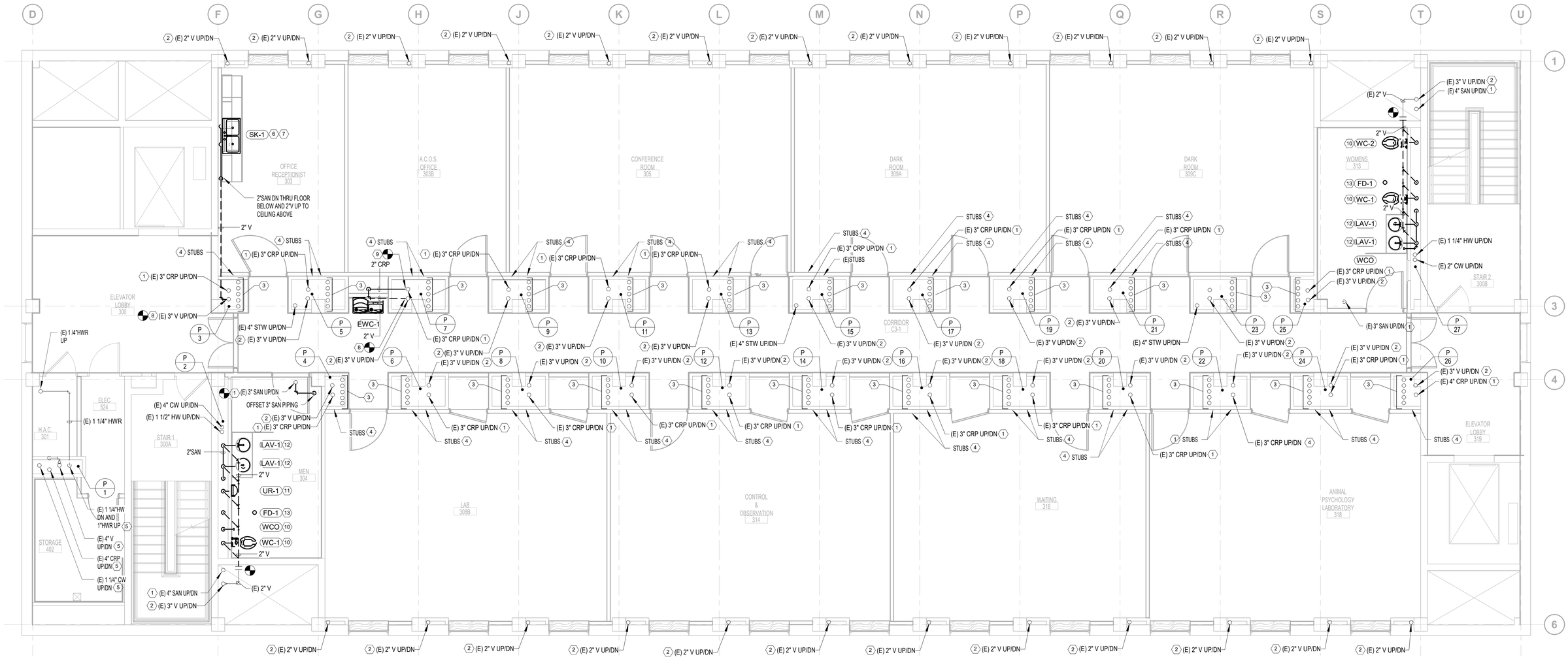

N

1 **PLUMBING - 4TH FLOOR PLAN**

1/4" = 1'-0"

REVIEW ONLY - NOT FOR CONSTRUCTION

100% CONSTRUCTION + BID DRAWINGS	09/28/2023
95% CONSTRUCTION DOCUMENTS	09/01/2023
65% DESIGN DEVELOPMENT	07/27/2023
Revisions:	Date:

CONSULTANT

ARCHITECT/ENGINEER OF RECORD

BANCROFT ARCHITECTS + ENGINEERS
3300 Dundee Rd.
Northbrook, IL 60062
T: 847.952.9362
www.bancroft-ae.com
VA CONTRACT NO.36C77623C0052
Bancroft Project No. 22-131

STAMP

LICENSED PROFESSIONAL ENGINEER RAED HAMID 062.065548 OF ILLINOIS
10-06-2023

Office of Construction and Facilities Management

VA U.S. Department of Veterans Affairs

Drawing Title: PLUMBING PLAN - LEVEL 4	Phase: 100% CONSTRUCTION DOCUMENTS - FOR BID	Project Title: EHRM-TASS	Project Number: 586-22-703
			Building Number: 5
Approved: Project Director		Location: G.V. (Sonny) Montgomery VAMC	Drawing Number: P-104
		Issue Date: 09/28/2023 · Checked: RH · Drawn: HS	

VA FORM 08-6231

PLUMBING KEYNOTES

1. EXISTING PIPING TO REMAIN AS IS.
2. CONNECT AND EXTEND 1"CW PIPING AND ROUTE TO COLUMN. INSTALL BFP-1 IN-LINE AND ACCESIBLE ON COLUMN.

PLUMBING GENERAL NOTES

A. CONTRACTOR TO COORDINATE WITH VA COR FOR ALL PLUMBING SERVICE OUTAGES.

B. EXISTING CONDITIONS ARE SHOWN BASED ON INFORMATION OBTAINED FROM FIELD SURVEYS, EXISTING BUILDING DOCUMENTS, AND STAFF. VERIFY EXISTING CONDITIONS AND REPORT ANY CONFLICTS BEFORE PROCEEDING.

C. CONTRACTOR IS RESPONSIBLE FOR ALL MODIFICATIONS TO THE EXISTING PIPING NECESSARY TO PERMIT THE INSTALLATION OF NEW WORK.

D. REFER TO PLUMBING FIXTURE ROUGH-IN SCHEDULE FOR BRANCH CONNECTION TO FIXTURE.

E. ALL ASSOCIATED PIPING SHALL INCLUDE BUT NOT BE LIMITED TO CW, HW,, SANITARY, CRS AND VENT PIPING.

F. ALL EXISTING FIXTURES SHOWN ON THE 3RD FLOOR ARE TO REMAIN AS IS.

G. ACCESS SHALL BE PROVIDED SUCH THAT PLUMBING COMPONENTS SHALL BE READILY SERVICEABLE, FOR ALL COMPONENTS THAT REQUIRE OPERATING, CLEANING, SERVICING, MAINTENANCE, AND CALIBRATION. SUCH COMPONENTS INCLUDES, BUT IS NOT LIMITED TO MANUAL VALVES, CHECK VALVES, BALANCING VALVES, ETC.

PLUMBING GENERAL NOTES

H. ALL DOMESTIC WATER PIPING SHALL BE 3/4"Ø MINIMUM AND ALL VENT PIPING SHALL BE 2"Ø MINIMUM UNLESS OTHERWISE NOTED.

I. ALL MEDICAL GAS PIPING TO BE 3/4" MINIMUM UNLESS OTHERWISE NOTED.

J. ALL PENETRATIONS SHALL BE SEALED WITH FIRE PROOFING.

K. ROUTE HOT WATER CIRCULATION PIPING DOWN WALL AND CONNECT 24" FROM PLUMBING FIXTURE OR AS CLOSE AS POSSIBLE.

L. COORDINATE CONCRETE FLOOR SLAB AND REPLACEMENT WORK WITH ARCHITECTURAL AND STRUCTURAL REQUIREMENTS. NEW CONCRETE FLOOR SLAB WORK SHALL BE PERFORMED AS EARLY AS POSSIBLE IN THE PROJECT SCHEDULE TO ALLOW FOR THE PROPER CURING TIME REQUIRED THE NEW FLOOR FINISHES.

M. HOT WATER PIPING ROUTING WAS INTENTIONALLY LEFT OFF. THERE IS ONLY COLD WATER PLUMBING WORK SHOWN ON THIS SHEET.

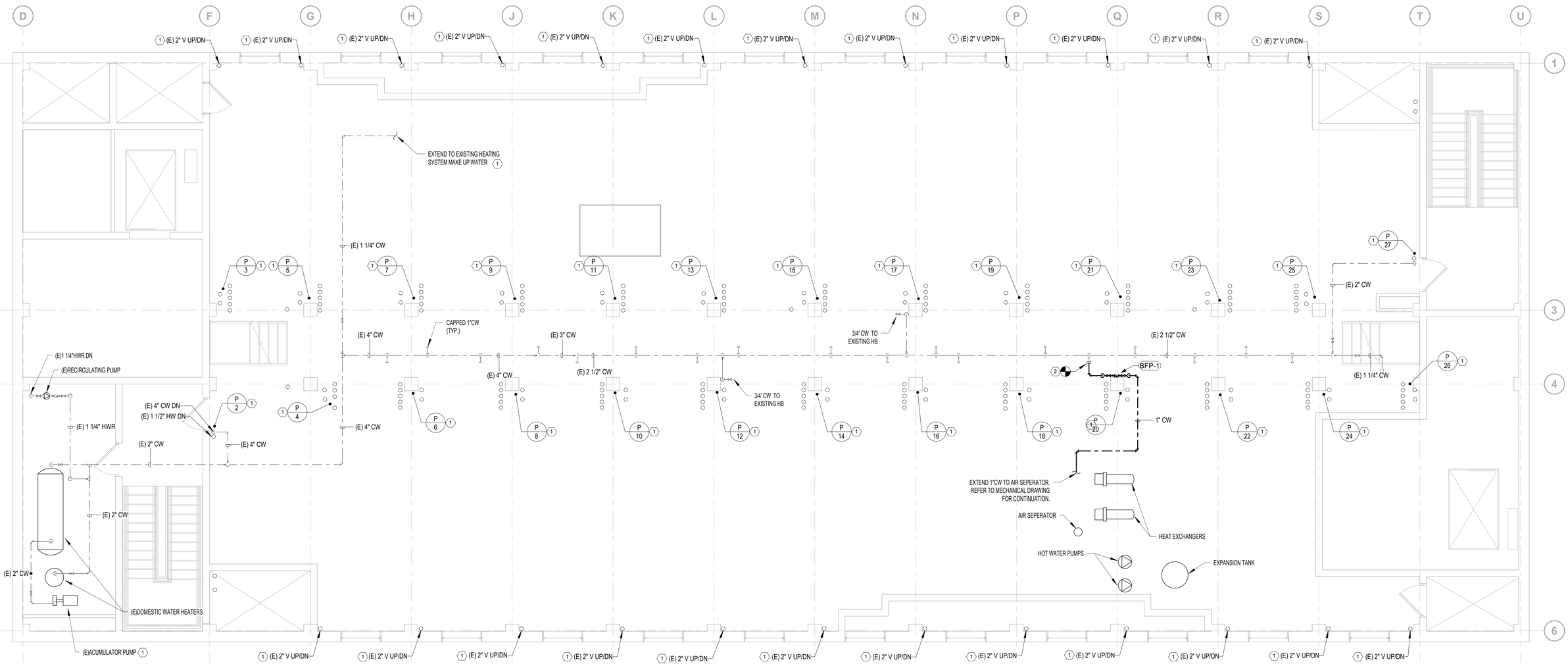

N

1 **PLUMBING - 5TH FLOOR PLAN**

1/4" = 1'-0"

REVIEW ONLY - NOT FOR CONSTRUCTION

100% CONSTRUCTION + BID DRAWINGS	09/28/2023
95% CONSTRUCTION DOCUMENTS	09/01/2023
65% DESIGN DEVELOPMENT	07/27/2023
Revisions:	Date:

CONSULTANT

ARCHITECT/ENGINEER OF RECORD

BANCROFT ARCHITECTS + ENGINEERS
3300 Dundee Rd.
Northbrook, IL 60062
T: 847.952.9362
www.bancroft-ae.com
VA CONTRACT NO.36C77623C0052
Bancroft Project No. 22-131

STAMP

LICENSED PROFESSIONAL ENGINEER RAED HAMID 062.065548 OF ILLINOIS
10-06-2023

Office of Construction and Facilities Management

VA U.S. Department of Veterans Affairs

Drawing Title: PLUMBING PLAN - LEVEL 5

Approved: Project Director

Phase: 100% CONSTRUCTION DOCUMENTS - FOR BID

Project Title: EHRM-TASS

Project Number: 586-22-703

Building Number: 5

Location: G.V. (Sonny) Montgomery VAMC

Issue Date: 09/28/2023

Checked: RH

Drawn: HS

Drawing Number: P-105

VA FORM 08-6231

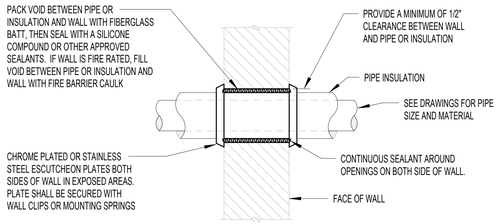

NOTES:
1. I.D. OF WALL OPENING TO BE A MIN. OF 1/2" LARGER THAN O.D. OF PIPE OR INSULATION PASSING THROUGH WALL.
2. CONTRACTOR SHALL BE RESPONSIBLE FOR THE COORDINATION OF THEIR WALL OPENINGS WITH OTHER TRADES AND / OR CONTRACTORS.
3. PIPE PENETRATIONS OF SMOKE OR FIRE WALLS SHALL BE IN COMPLIANCE WITH NFPA-90A.

3 PIPE PENETRATION OF INTERIOR WALL

NOT TO SCALE

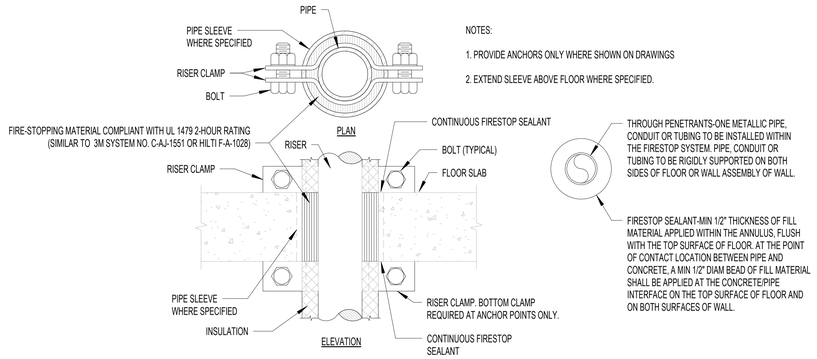

NOTES:

1. PROVIDE ANCHORS ONLY WHERE SHOWN ON DRAWINGS

2. EXTEND SLEEVE ABOVE FLOOR WHERE SPECIFIED.

2 SUPPORT / ANCHOR FOR PIPE RISERS

NOT TO SCALE

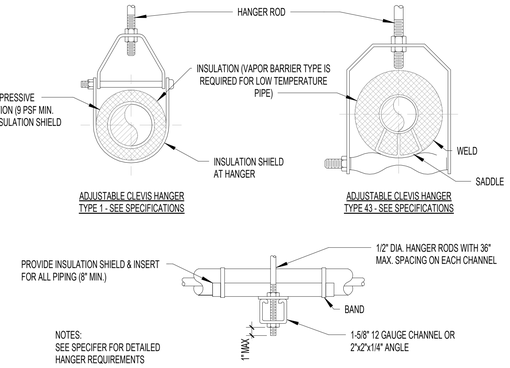

SIDE VIEW TRAPEZE HANGER FOR UP TO 1000 LB. UNIFORM LOAD

MAXIMUM PIPE/TUBING SUPPORT SPACING									
NOM. SIZE	IN.	THRU 3/4	1	1 1/4	1 1/2	2	2 1/2	3	4
PIPE	FT.	7	7	7	9	10	11	12	14
TUBING	FT.	5 FT	6	7	8	8	9	10	12
NOTE: FOR TRAPEZE HANGER TAKE SPACING OF SMALLEST SIZE ON TRAPEZE.									

1 PIPE HANGER

NOT TO SCALE

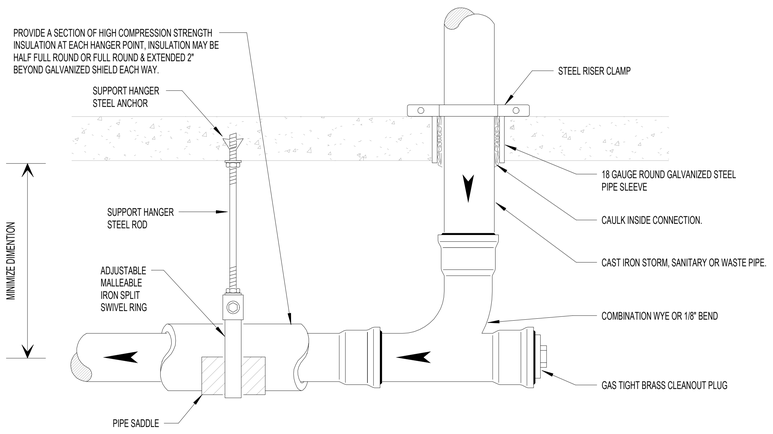

6 SUSPEND DRAINAGE CLEANOUT

NOT TO SCALE

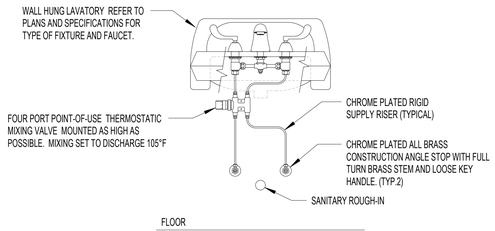

NOTE:

1. SEE ARCHITECTURAL DRAWINGS FOR LAVATORY MOUNTING HEIGHTS.

2. P-TRAP, TAIL PIECE, AND WASTE ARM NOT SHOWN FOR CLARITY.

3. FOR HANDICAP LAVATORY INSTALLATION ALL WASTE PIPING UNDER SINK SHALL BE WRAPPED WITH PROTECTIVE PIPE COVERS.

4. FOR HANDICAP LAVATORY INSTALLATION ANGLE STOP VALVES AND SUPPLY RISERS SHALL BE WRAPPED WITH PROTECTIVE PIPE COVERS. SUPPLY RISERS SHALL BE WRAPPED FROM STOP VALVES TO MIXING VALVE. ENDS OF PROTECTIVE WRAP SHALL BE CUT SQUARE AND TIE WRAPPED CLOSED.

5 LAVATORY MIXING VALVE

NOT TO SCALE

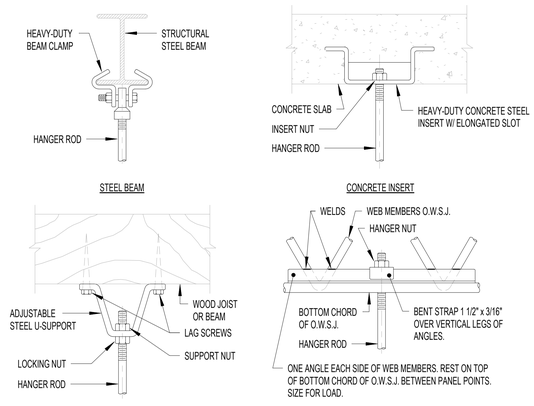

PIPE HANGERS AND SUPPORTS
SUPPORT HORIZONTAL STEEL AND COPPER PIPING AS FOLLOWS:

NOMINAL PIPE SIZE	DISTANCE BETWEEN SUPPORTS	HANGER ROD DIAMETERS
1/2"	6'	3/8"
3/4" TO 1-1/2"	6'	1/2"
2" TO 2-1/2"	10'	1/2"
3" TO 4"	12'	5/8"
6" TO 12"	14'	7/8"
14" TO 18"	20'	1"

PLACE HANGER WITHIN 1 FOOT OF EACH HORIZ. ELBOW. SUPPORT HORIZ. SOIL WASTE AND STORM PIPE NEAR EACH HUB, WITH 5 FEET MAXIMUM SPACING BETWEEN HANGERS.

VERTICAL PIPING:
1. SUPPORT VERTICAL WATER PIPING AT EVERY FLOOR.
2. SUPPORT VERTICAL SOIL PIPE AT EACH FLOOR AT HUB.

WHERE SEVERAL PIPES CAN BE INSTALLED IN PARALLEL AND AT SAME ELEVATION PROVIDE MULTIPLE OR TRAPEZE HANGERS. WHERE PRACTICAL, SUPPORT RISER PIPING INDEPENDENTLY OF CONNECTED HORIZ. PIPING.

4 PIPE HANGER

NOT TO SCALE

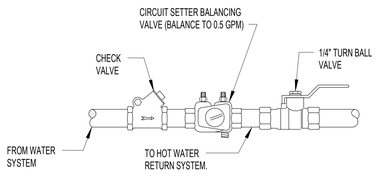

8 HOT WATER CIRCULATION (HWC) VALVE ASSEMBLY

NOT TO SCALE

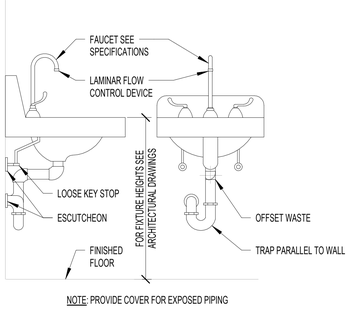

NOTE: PROVIDE COVER FOR EXPOSED PIPING

7 TYPICAL WHEELCHAIR LAVATORY

NOT TO SCALE

REVIEW ONLY - NOT FOR CONSTRUCTION

100% CONSTRUCTION + BID DRAWINGS	09/28/2023
95% CONSTRUCTION DOCUMENTS	09/01/2023
65% DESIGN DEVELOPMENT	07/27/2023
Revisions:	Date:

CONSULTANT

ARCHITECT/ENGINEER OF RECORD
BANCROFT ARCHITECTS + ENGINEERS
3300 Dundee Rd.
Northbrook, IL 60062
T: 847.952.9362
www.bancroft-ae.com
VA CONTRACT NO.36C77623C0052
Bancroft Project No. 22-131

STAMP
LICENSED PROFESSIONAL ENGINEER OF ILLINOIS
RAED HAMID
062.065548
10-06-2023

Office of Construction and Facilities Management
U.S. Department of Veterans Affairs

Drawing Title: PLUMBING - DETAILS
Approved: Project Director
Phase: 100% CONSTRUCTION DOCUMENTS - FOR BID
Project Title: EHRM-TASS
Project Number: 586-22-703
Building Number: 5
Location: G.V. (Sonny) Montgomery VAMC
Drawing Number: P-501
Issue Date: 09/28/2023
Checked: RH
Drawn: HS

VA FORM 08-6231

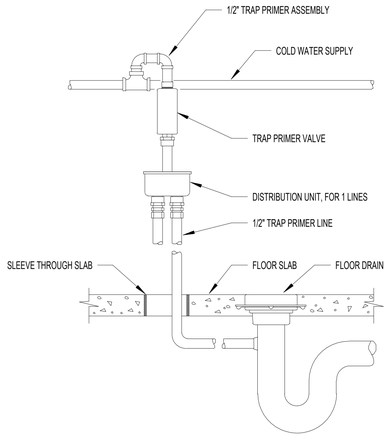

3 TRAP PRIMER DETAIL

NOT TO SCALE

WATER HAMMER ARRESTOR SIZE		
MODEL	CONNECTION DIAMETER (IN.)	FIXTURE UNITS
Z1700-100	3/4	1-11
Z1700-200	3/4	12-32
Z1700-300	1	33-60
Z1700-400	1	61-113
Z1700-500	1	114-154
Z1700-600	1	155-330

SIZING BASED ON ZURN SERIES Z1700

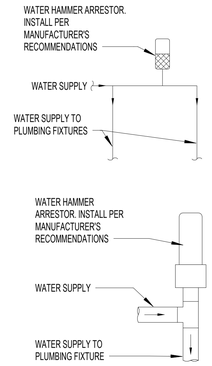

2 WATER HAMMER ARRESTOR DETAIL

NOT TO SCALE

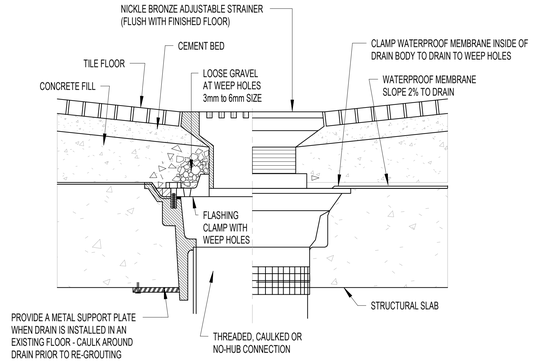

1 TYPE "C" FLOOR DRAIN

NOT TO SCALE

NOTE:
REFE R TO DETAIL 4/P-502 FOR TRAP PRIMER DETAIL.

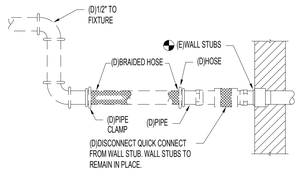

TYPICAL HOSE CONNECTION AT QUICK DISCONNECT
COUPLING DEMOLITION FOR EQUIPMENT & FIXTURE OUTLETS

NTS

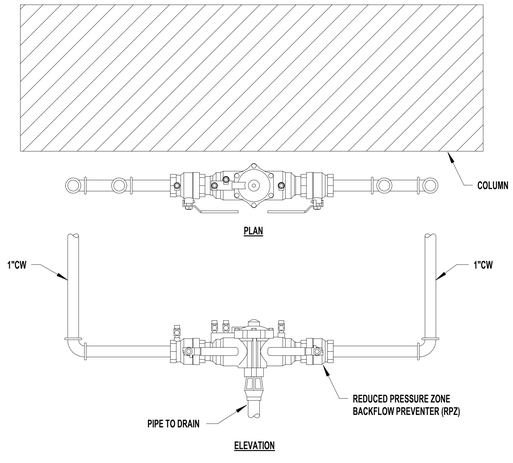

NOTE:
1. CONTRACTOR TO PROVIDE VA WITH BACKFLOW TEST REPORT.
2. INSTALL RPZ 12" TO 60" ABOVE FINISHED FLOOR.

5 MAKE-UP WATER BACKFLOW PREVENTER DETAIL

NOT TO SCALE

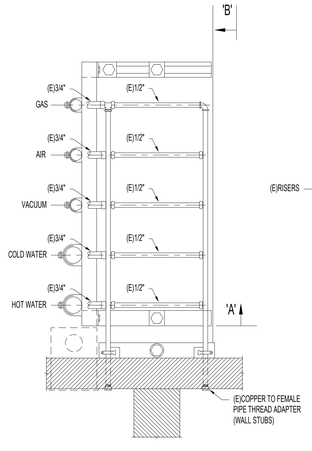

PART PLAN OF UTILITY CHASE

NTS

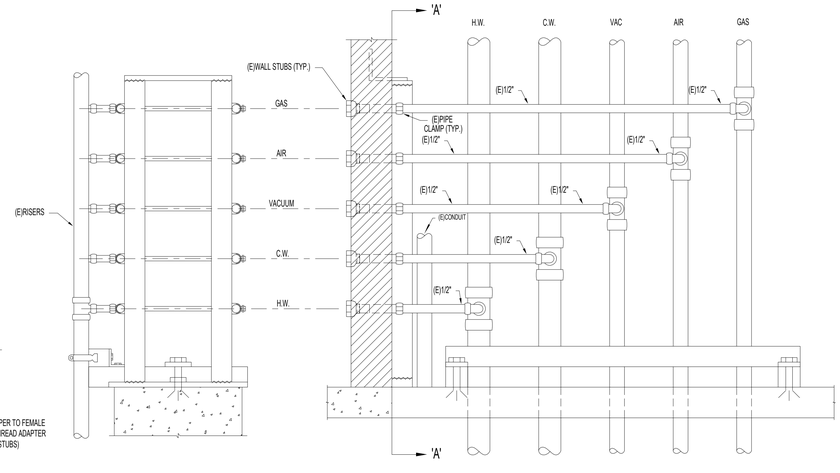

SECTION "B-B"

NTS

4 TYPICAL PIPE RISER IN UTILITY CHASE DETAIL

NOT TO SCALE

REVIEW ONLY - NOT FOR CONSTRUCTION

100% CONSTRUCTION + BID DRAWINGS	09/28/2023
95% CONSTRUCTION DOCUMENTS	09/01/2023
65% DESIGN DEVELOPMENT	07/27/2023
Revisions:	Date:

CONSULTANT

ARCHITECT/ENGINEER OF RECORD

BANCROFT ARCHITECTS + ENGINEERS
3300 Dundee Rd.
Northbrook, IL 60062
T: 847.952.9362
www.bancroft-ae.com
VA CONTRACT NO.36C77623C0052
Bancroft Project No. 22-131

STAMP

LICENSED PROFESSIONAL ENGINEER RAED HAMID 062.065548 OF ILLINOIS
10-06-2023

Office of Construction and Facilities Management

VA U.S. Department of Veterans Affairs

Drawing Title: PLUMBING - DETAILS

Approved: Project Director

Phase: 100% CONSTRUCTION DOCUMENTS - FOR BID

Project Title: EHRM-TASS

Project Number: 586-22-703

Building Number: 5

Location: G.V. (Sonny) Montgomery VAMC

Issue Date: 09/28/2023

Checked: RH

Drawn: HS

Drawing Number: P-502

VA FORM 08-6231

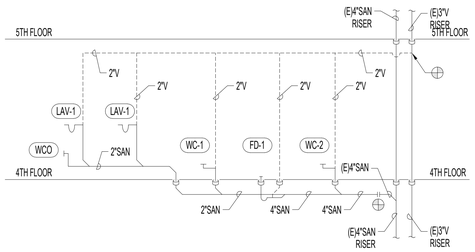

3 PLUMBING RISER - SAN AND VENT - WOMEN'S TOILET

NOT TO SCALE

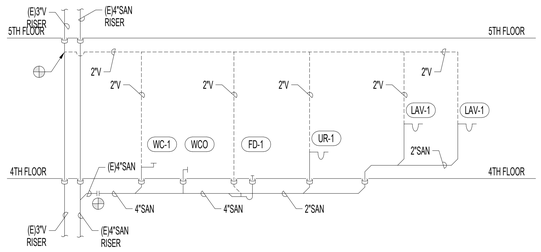

2 PLUMBING RISER - SAN AND VENT - MEN'S TOILET

NOT TO SCALE

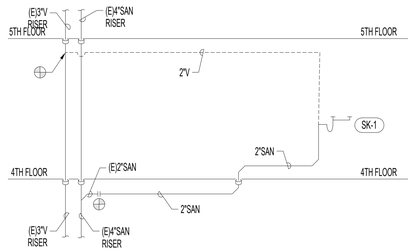

1 PLUMBING RISER - SAN AND VENT - BREAK ROOM

NOT TO SCALE

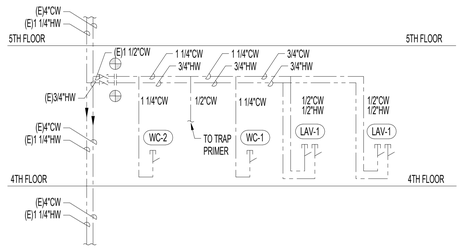

6 PLUMBING RISER - DOMESTIC WATER - WOMEN'S TOILET

NOT TO SCALE

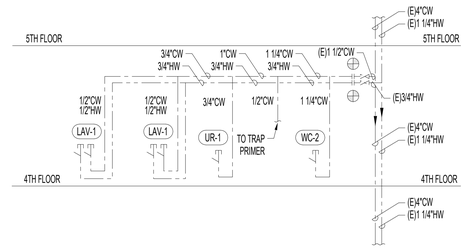

5 PLUMBING RISER - DOMESTIC WATER - MEN'S TOILET

NOT TO SCALE

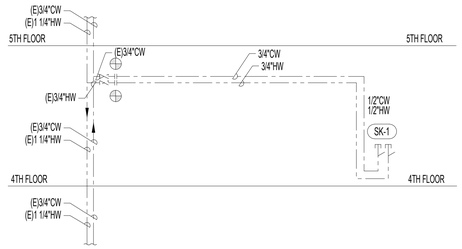

4 PLUMBING RISER - DOMESTIC WATER - BREAK ROOM

NOT TO SCALE

REVIEW ONLY - NOT FOR CONSTRUCTION

100% CONSTRUCTION + BID DRAWINGS	09/28/2023
95% CONSTRUCTION DOCUMENTS	09/01/2023
65% DESIGN DEVELOPMENT	07/27/2023
Revisions:	Date:

CONSULTANT

ARCHITECT/ENGINEER OF RECORD

BANCROFT ARCHITECTS + ENGINEERS
3300 Dundee Rd.
Northbrook, IL 60062
T: 847.952.9362
www.bancroft-ae.com
VA CONTRACT NO.36C77623C0052
Bancroft Project No. 22-131

STAMP

LICENSED PROFESSIONAL ENGINEER
RAED HAMID
062.065548
OF ILLINOIS
10-06-2023

Office of Construction and Facilities Management

VA U.S. Department of Veterans Affairs

Drawing Title: PLUMBING - DOMESTIC WATER RISER DIAGRAM

Approved: Project Director

Phase: 100% CONSTRUCTION DOCUMENTS - FOR BID

Project Title: EHRM-TASS

Project Number: 586-22-703

Building Number: 5

Location: G.V. (Sonny) Montgomery VAMC

Issue Date: 09/28/2023

Checked: RH

Drawn: HS

Drawing Number: P-601

VA FORM 08-6231

PLUMBING PIPING MATERIALS

SYSTEM	MATERIAL	JOINING METHOD	FITTINGS	INSULATION
DOMESTIC COLD WATER	TYPE L COPPER; ASTM B88	SOLDERED	WROUGHT COPPER; ASME B16.22	1/2" PREFORMED MINERAL FIBER w/ R-VALUE = 1.85
DOMESTIC HOT WATER	TYPE L COPPER; ASTM B88	SOLDERED	WROUGHT COPPER; ASME B16.22	PREFORMED MINERAL FIBER; 1/2" TO 1-1/2" PIPE = 1" THICK w/ R-VALUE = 3.7 2" AND LARGER PIPE = 1 1/2" THICK w/ R-VALUE = 5.55
DOMESTIC HOT WATER RETURN	TYPE L COPPER; ASTM B88	SOLDERED	WROUGHT COPPER; ASME B16.22	1 1/2" PREFORMED MINERAL FIBER w/ R-VALUE = 1.85
SANITARY WASTE (BELOW GRADE,ABOVE GRADE AND 5'-0 OUTSIDE OUR BLDG.)	EPOXY COATED HUBLESS CAST IRON; ASTM A-888, CISPI 301	4 BAND HEAVY DUTY COUPLINGS WITH EPDM SLEEVE; ASTM C1540	EPOXY COATED HUBLESS CAST IRON; ASTM A-888 AND CISPI 301	NONE
SANITARY VENT (BELOW OR ABOVE GRADE	DWV COPPER; ASTM B306	SOLDERED	CAST COPPER; WROUGHT COPPER; ASME B16.23 OR ASME B16.29	NOT USED FOR URINAL DRAINS
SANITARY VENT (EXPOSED PIPING)	CHROME PLATED BRASS	SOLDERED	CHROME PLATED BRASS	NONE
EXPOSED DRAINS, DOMESTIC WATER SUPPLIES, AND STOPS ON ACCESSIBLE FIXTURES	VARIES (BRASS AND COPPER)	VARIES	VARIES (BRASS AND COPPER)	1/2" MINERAL FIBER OR ELASTOMERIX WITH JACKET

PLUMBING FIXTURE SCHEDULE

MARK	DESCRIPTION	MANUFACTURER	MODEL	DOMESTIC COLD WATER	DOMESTIC HOT WATER	SANITARY	VENT	REMARKS
WC-1 (P-113)	WATER CLOSET FLUSH VALVE	AMERICAN STANDARD ZURN	2257.103 ZEMS6000AV-2	1 1/4"	-	4"	2"	WALL MOUNTED ELONGATED REAR OUTLET, WHITE VITREOUS CHINA, DIRECT-FED SIPHON JET ACTION, 1 1/2" TOP SPUD, 2 BOLTS CAPS, 15" RIM HEIGHT. EXPOSED, QUIET DIAPHRAGM, CHROME PLATED FLUSHOMETER VALVE WITH A POLISHED EXTERIOR. PROVIDE ZURN'S AQUAVANTAGE TPE, CHLORAMINE RESISTANT, DUAL SEAL DIAPHRAM WITH A CLOG RESISTANT, TRIPLE FILTERED BYPASS WITH 6 VDC MOTOR ACTUATOR, AN INTEGRAL INFRARED CONVERGENCE-TYPE PROXIMITY SENSOR AND A MANUAL PUSH BUTTON OVERRIDE, HIGH IMPACT RESISTANT POLYCARBONATE HOUSING AND CHROME PLATED PLASTIC COVER WITH MANUAL OVERRIDE PUSH BUTTON AND 10 DEGREE ANGLED SENSOR. PROVIDE P6000-HW6 ACESSORY AND 24" VALVE HEIGHT. ENLONGATED EXTRA HEAVY DUTY COMMERICAL TOILET SEAT WHITE IN COLOR, OPEN FRONT TOILET SEAT LESS COVER, INJECTION MOLDED SOLID POLYPROPYLENE, ANTI-MICROBIAL, 304 STAINLESS STEEL CHECK HINGE.
WC-2 (P-113)	WATER CLOSET FLUSH VALVE	AMERICAN STANDARD ZURN	2257.103 ZEMS6000AV-2	1 1/4"	-	4"	2"	ACCESSIBLE WALL MOUNTED ELONGATED REAR OUTLET, WHITE VITREOUS CHINA, DIRECT-FED SIPHON JET ACTION, 1 1/2" TOP SPUD, 2 BOLTS CAPS, 16 1/2" RIM HEIGHT ACCESSIBLE. PROVIDE ZURN'S AQUAVANTAGE TPE, CHLORAMINE RESISTANT, DUAL SEAL DIAPHRAM WITH A CLOG RESISTANT, TRIPLE FILTERED BYPASS WITH 6 VDC MOTOR ACTUATOR, AN INTEGRAL INFRARED CONVERGENCE-TYPE PROXIMITY SENSOR AND A MANUAL PUSH BUTTON OVERRIDE, HIGH IMPACT RESISTANT POLYCARBONATE HOUSING AND CHROME PLATED PLASTIC COVER WITH MANUAL OVERRIDE PUSH BUTTON AND 10 DEGREE ANGLED SENSOR. PROVIDE P6000-HW6 ACESSORY AND 24" VALVE HEIGHT. ENLONGATED EXTRA HEAVY DUTY COMMERICAL TOILET SEAT WHITE IN COLOR, OPEN FRONT TOILET SEAT LESS COVER, INJECTION MOLDED SOLID POLYPROPYLENE, ANTI-MICROBIAL, 304 STAINLESS STEEL CHECK HINGE.
UR-1 (P-203)	URINAL FLUSH VALVE	AMERICAN STANDARD ZURN	6501.61 ZEM6000AV-IS	3/4"	-	2"	1 1/2"	ACCESSIBLE WALL MOUNTED, WHITE VITREOUS CHINA, WASHOUT FLUSH ACTION, , ENLONGATED RIM, 3/4" TOP SPUD, 2" OUTLET. EXPOSED FLUSH VALVE POLISHED CHROME, SENSOR OPERATED, 1.0 GALLONS PER FLUSH, HARDWIRED AC POWER WITH TRANSFORMER, 11 1/2" ROUGH-IN, 3/4" TOP SPUD, 3/4" I.P.S ANGLE STOP WITH BACK-FLOW PROTECTION, VANDAL-RESISTANT CAP, 3/4" VACUUM BREAKER, SPUD COUPLING AND FLANGE, CHEMICAL RESISTANT EPDM SEALS.
LAV-1 (P-418)	LAVATORY	AMERICAN STANDARD T & S BRASS	0356.421 EC-3107-LF22	1/2"	1/2"	1 1/2"	1 1/2"	ACCESSIBLE WALL MOUNTED, WHITE VITREOUS CHINA, FRONT OVERFLOW, SINGLE CENTER FAUCET HOLE. OVERALL DIMENSIONS 20 1/2" x 18 1/4" x 6 1/2". FAUCET SHALL BE 4" CENTER TO CENTER DECK MOUNTED, SENSOR FAUCET WITH POSHED CHROME PLATEED BRASS BODY, 4 1/8" RIGID GOOSENECK, 2.2 GPM VANDAL RESISTANT LAMINAR FLOW, AC/DC CONTROL MODULE WITH INTERNAL FLOW, CONTROL SETTING SWITCHES. TEMPERATURE CONTROL MIXING VALVE WITH 18" FLEXIBLE STAINLESS STEEL SUPPLY HOSES WITH 3/8" COMPRESSION CONNECTIONS. PROVIDE INSULATION PREMANUFACTURED FOR P-TRAP, STOP VALVE, ANS SUPPLY LINES. MOUNT CONTROL BOX IN ACCESSIBLE LOCATION. APPROVED ASME AND ANSI. ADA COMPLAINT.
SK-1 (P-524)	SINK	ELKAY CHICAGO FAUCETS	ELUHAD4218 201-G8AE3-317AB	1/2"	1/2"	1 1/2"	1 1/2"	UNDERMOUNT DOUBLE BOWL SINK, #18 GAUGE, TYPE 304 NICKEL EARING STAINLESS STEEL, OVERALL DIMENSIONS 42" x 18", INSIDE EACH BOWL 19" x 16" x 5 1/2" DRAIN OPENING 3 1/2" CENTER REAR LOCATION. 1 1/2" 17 GAUGE CHROME-PLATED BRASS TAILPIECE AND P-TRAP, QUARTER-TURN 3/8" CHROME-PLATED HEAVY BRASS ANGLE SUPPLIES WITH STOPS, CHROME PLATED SOFT COPPER SUPPLY LIES. MANUAL DECK MOUNTED FAUCET, 8" FIXED CENTERS, 8" SWING GOOSENECK SPOUT, 2.2 GPM AERATOR, 4" VANDAL PROOF WRISTBLADE HANDLE. APPROVED ASME AND NSF/ANSI. ADA COMPLAINT.
EWC-1 (P-608)	ELECTRIC WATER COOLER	ELKAY	EZSTL8	1/2"	-	1 1/2"	1 1/2"	TWO STATION WALL MOUNTED WATER COOLERS BOTTLE FILLING STATION BARRIER-FREE ACCESS, CONSTRUCTION GALVANIZED STEEL CHASIS SUPPORT WITH A STAINLESS STEEL BASIN. EASY TOUCH CONTROL ON FRONT, BUILT-IN REGULATOR AND DRAIN AND ENCLOSED ADJUSTABLE THERMOSTAT, BOTTLE FILLER SHALL PROVIDE 1.1 GPM FLOW RATE WITH LAMINAR FLOW, COMPRESSOR HERMETICALLY-SEALED, RECIPROCATING TYPE, REFRIGERANT HFC-134a, SINGLE PHASE 115V, 370 WATTS. APPROVED ANSI AND UL. ADA COMPLIANT.
FD-1 (TYPE-C)	FLOOR DRAIN	ZURN	Z541	-	-	4"	2"	ROUND TOP DRAIN, DURA-COATED CAST IRON BODY WITH BOTTOM OUTLET, SEEPAGE PAN AND COMBINATION MEMBRANE FLASHING CLAMP AND FRAME FOR HEAVY-DUTY, DURESIST GRATE, TRAP PRIMER CONNECTION, CAST IRON SEDIMENT BUCKET, LOOSE SLOTTED GRATE. 12 1/4" DIAMETER TOP DRAIN.
TP-1	TRAP PRIMER	MIFAB	M1-500-NPB	1/2"	-	-	-	PRESSURE DROP ACTIVATED BRASS TRAP SEAL PRIMER, WITH INLET OPENING OF 1/2" MALE N.P.T. AND OUTLET OPENING OF FEMALE 1/2" N.P.T. COMPLETE WITH 4 HOLES AND REMOVABLE FILTER SCREEN, SERVES UP TO 6 TRAPS AND REQUIRES NO ADJUSTMENTS AND NO AIR PRE-CHARGE, CONFORMING TO STANDARD ASSE 1018.
WHA-1	WATER HAMMER ASSESTER	ZURN	Z1700	-	-	-	-	WATER HAMMER ARRESTORS ALL STAINLESS STEEL CONTRUCTION. PRE-CHARGED, HERMETICALY SEALED BELLOWS TYPE. APPROVED PDI, ANSI, AND ASSE.
BFP-1	BACKFLOW PREVENTER	WATTS	009M2QT	1"	-	-	-	REDUCE PRESSURE ZONE ASSEMBLY FOR NON-POTABLE SERVICE. IN-LINE CHECKVALVES, SPRINGS AND REPLACEABLE CHECK SEATS AND RELIEF VALVE WITH SHUT OFFS.

NOTES:
1. SIZES LISTED ARE MINIMUM CONNECTIONS REQUIRED TO FIXTURES.

REVIEW ONLY - NOT FOR CONSTRUCTION

100% CONSTRUCTION + BID DRAWINGS	09/28/2023
95% CONSTRUCTION DOCUMENTS	09/01/2023
65% DESIGN DEVELOPMENT	07/27/2023
Revisions:	Date:

CONSULTANT

ARCHITECT/ENGINEER OF RECORD

BANCROFT ARCHITECTS + ENGINEERS
3300 Dundee Rd.
Northbrook, IL 60062
T: 847.952.9362
www.bancroft-ae.com
VA CONTRACT NO.36C77623C0052
Bancroft Project No. 22-131

STAMP

LICENSED PROFESSIONAL ENGINEER
RAED HAMID
062.065548
OF ILLINOIS
10-06-2023

Office of Construction and Facilities Management

VA U.S. Department of Veterans Affairs

Drawing Title: PLUMBING - SCHEDULES

Approved: Project Director

Phase: 100% CONSTRUCTION DOCUMENTS - FOR BID

Project Title: EHRM-TASS

Project Number: 586-22-703

Building Number: 5

Location: G.V. (Sonny) Montgomery VAMC

Drawing Number: P-701

Issue Date: 09/28/2023 | Checked: RH | Drawn: HS

VA FORM 08-6231

MECHANICAL GENERAL NOTES:

1. SEE ALL PROJECT GENERAL NOTES AND OTHER REQUIREMENTS INCLUDING THE LIFE SAFETY AND INFECTION CONTROL REQUIREMENTS LOCATED WITHIN THE GENERAL DRAWINGS SECTION. COMPLY WITH ALL REQUIREMENTS AS THEY ARE A DIRECT PART OF THIS SECTION AND AS IF THEY WERE DIRECTLY INCLUDED AND PROVIDED BELOW.

2. EQUIVALENCY SUBSTITUTIONS: THE "BASIS OF DESIGN (BOD) PROTOCOLS" IS TO BE FOLLOWED FOR ALL EQUIPMENT, MATERIALS AND ASSEMBLIES SPECIFIED AND DETAILED THROUGHOUT ALL DRAWINGS AND SPECIFICATION SECTIONS, WHETHER THE BOD DESIGNATE IS SPECIFICALLY REFERENCED THEREIN OR NOT. SEE THE GENERAL DRAWINGS SECTION FOR THE FULL BOD EQUIVALENCY SUBSTITUTION REQUIREMENTS AND PROTOCOLS TO BE FOLLOWED.

3. CONTRACTOR SHALL FULLY REVIEW ENTIRE SET OF CONTRACT DOCUMENTS, THE DRAWINGS AND SPECIFICATIONS, INCLUDING BUT NOT NECESSARILY LIMITED TO ARCHITECTURAL, STRUCTURAL, MECHANICAL, ELECTRICAL, FIRE PROTECTION, LIFE SAFETY, MEDICAL GAS, ETC. AND SHALL ACKNOWLEDGE AND INCLUDE IN THEIR SCOPE OF WORK ALL CONDITIONS PERTINENT TO THE COMPLETION OF THE WORK.

4. CONTRACTOR SHALL FULLY COORDINATE THEIR WORK WITH THE GENERAL/PRIME CONTRACTOR AND THE INSTALLATION WORK OF OTHER TRADES, AND FULLY PROVIDE ALL NECESSARY FIELD ADJUSTMENTS AS REQUIRED TO ACCOMMODATE THE FINAL FULLY COORDINATED SOW INSTALLATION(S).

5. THIS CONTRACTOR SHALL CAREFULLY EXAMINE THE DRAWINGS AND SPECIFICATIONS, VISIT THE SITE OF THE WORK AND FULLY INFORM THEMSELVES AS TO ALL CONDITIONS AND MATTERS THAT CAN, IN ANY WAY, AFFECT THE WORK OR THE COST THEREOF.

6. SHOULD THE CONTRACTOR FIND DISCREPANCIES IN, OR OMISSIONS FROM THE DRAWINGS, SPECIFICATIONS OR OTHER DOCUMENTS, OR BE IN DOUBT AS TO THEIR MEANING, NOTIFY THE VA/CO AT ONCE IN WRITING OF ANY DISCREPANCIES BETWEEN EXISTING CONDITIONS AND WORK, OR BETWEEN THEIR WORK AND THE WORK OF OTHER TRADES AND OBTAIN CLARIFICATION FROM THE VA/CO PRIOR TO SUBMITTING ANY BID. LACK OF SUCH NOTIFICATION DURING THE BIDDING PHASE SHALL BE CONSTRUED AS TO INDICATE NO DISCREPANCIES OR CONFLICTING CONDITIONS EXIST.

7. DRAWINGS ARE INTENDED TO BE GENERALLY DIAGRAMMATIC AND ARE NOT TO BE SCALED FOR LOCATING THE WORK. USE THE GIVEN DIMENSIONS AND SIZES AS INDICATED AND COORDINATE ALL LOCATION, HEIGHT, ELEVATION AND CLEARANCE REQUIREMENTS WITH ALL CONTRACTORS, THE EXISTING CONDITIONS AND ALL ELEMENTS OF WORK YET TO BE INSTALLED.

8. ROUTING OF PIPING, DUCTWORK, CONDUITS, RACEWAYS, ETC., AS SHOWN ON DRAWINGS, IS NOT INTEND TO SHOW EVERY RISE, DROP, OFFSET, FITTING OR EVERY STRUCTURAL ELEMENT THAT MAY BE ENCOUNTERED DURING THE INSTALLATION OF THE WORK. EACH CONTRACTOR SHALL MAKE THE REQUIRED MODIFICATIONS FROM THE GENERAL ROUTING SHOWN ON THESE DRAWINGS, SUCH AS OFFSETS, BENDS OR CHANGES IN ELEVATION DUE TO COORDINATION WITH THE WORK OF OTHER TRADES AND THE REMAINING EXISTING CONSTRUCTION.

9. IT IS THE INTENT OF THESE DOCUMENTS THAT THE MECHANICAL CONTRACTOR PROVIDE ALL LABOR, MATERIAL, EQUIPMENT AND TOOLS FOR THE COMPLETE INSTALLATION OF ALL WORK SHOWN ON THE PLANS, INCLUDED IN THE SPECIFICATIONS, AND/OR DESCRIBED HEREIN, INCLUDING ALL DEVICES, CONTROLS, AND APPURTENANCES REQUIRED TO TEST AND PROVIDE COMPLETED SYSTEMS IN FULL FUNCTIONAL OPERATION.

10. SHOULD CONDITIONS NECESSITATE ANY REARRANGEMENTS OR IF ANY SYSTEMS LAYOUT CAN BE RUN TO BETTER ADVANTAGE, PREPARE AND SUBMIT SHOP DRAWINGS SHOWING THE REQUESTED CHANGES BEFORE PROCEEDING WITH THE WORK. IF SUCH CHANGES ARE APPROVED BY THE VA/COR AND SUCCESSFULLY REVIEWED BY THE A/E, THEY WILL BECOME A PART OF THE CONTRACT SOW.

11. CONTRACTOR SHALL FIELD VERIFY ALL MOUNTING REQUIREMENTS, ARRANGEMENTS, HEIGHTS, LOCATIONS, AND SUPPORTS PRIOR TO PERFORMING ANY ROUGH-IN WORK. NO ROUGH-IN WORK WILL BE ALLOWED TO BEGIN UNTIL THE CONTRACTOR OBTAINS BOTH GENERAL/PRIME CONTRACTOR AND VA/COR APPROVAL. ANY MENTION OF SPECIFIC MOUNTING ARRANGEMENT(S), WEIGHT OR LOCATION(S) IN THE CONSTRUCTION DOCUMENTS SHALL NOT RELIEVE THE CONTRACTOR OF THE RESPONSIBILITY TO VERIFY AND COORDINATE THE SPECIFIC REQUIREMENTS FURNISHED OR THE REQUIREMENTS OF OTHER TRADES WORKING IN THE SAME AREA. NO ADDITIONS TO THE CONTRACT SUM WILL BE CONSIDERED FOR THE CORRECTION OF ITEMS INSTALLED IMPROPERLY, IN WRONG LOCATIONS, IN CONFLICT WITH OTHER WORK, ETC.

12. CONTRACTOR SHALL FURNISH AND INSTALL A COMPLETE TEMPERATURE CONTROL SYSTEM AS SPECIFIED AND AS REQUIRED TO FULLY INTEGRATE WITH ALL EXISTING AND NEW EQUIPMENT AND SYSTEMS AS WELL AS WITH THE EXISTING BAS.

13. ALL WORK SHALL BE DONE IN ACCORDANCE WITH ALL APPROPRIATE VA DESIGN GUIDES/MANUALS, CURRENT FEDERAL BUILDING CODES, REGULATIONS, AND REQUIREMENTS, LOCAL UTILITY COMPANY REQUIREMENTS, AND ASHRAE STANDARDS.

14. CONTRACTOR SHALL PAY ALL PERMIT FEES, PLAN REVIEW FEES, LICENSE FEES, INSPECTIONS, AND ALL RELATED EXPENSES APPLICABLE TO THEIR DIVISION/WORK IF REQUIRED ON THIS PROJECT. ALL SUCH COSTS/EXPENSES SHALL BE INCLUDED IN THEIR BASE BID CONTRACT AMOUNT AS IDENTIFIED AND COORDINATED WITH THE GENERAL/PRIME CONTRACTOR.

15. CONTRACTOR SHALL BE LICENSED, BONDED, INSURED AND CAPABLE OF PERFORMING QUALITY WORKMANSHIP AND GUARANTEES HIS WORK AND MATERIALS FOR THE PERIOD(S) AS REQUIRED IN THE SPECIFICATIONS IN ORDER TO RECEIVE FINAL ACCEPTANCE BY THE VA/COR.

16. CONTRACTOR SHALL ESTABLISH SAFE WORKING PROCEDURES FOR THE PROTECTION OF THEIR PERSONNEL AND ALL OTHERS THROUGHOUT ALL PHASES OF THEIR WORK. THEY SHALL COMPLY WITH ALL VA REQUIREMENTS AND THE APPLICABLE PROVISIONS OF ALL LOCAL, STATE, FEDERAL SAFETY LAWS (OSHA) AND AS RECOMMENDED IN THE "MANUAL OF ACCIDENT PREVENTION IN CONSTRUCTION" AS ISSUED BY THE ASSOCIATION OF GENERAL CONTRACTORS OF AMERICA, 20TH AND E. STREETS, N.W. WASHINGTON, D.C., LATEST EDITION.

17. CONTRACTOR SHALL CHECK DRAWINGS OF OTHER TRADES TO VERIFY THAT SPACES IN WHICH THEIR WORK WILL BE INSTALLED ARE CLEAR OF ANY OBSTRUCTIONS. WORK SHALL BE INSTALLED TO MAINTAIN MAXIMUM HEADROOM AND SPACE CONDITIONS AT ALL POINTS IN THE BUILDING. WHERE HEADROOM OR SPACE CONDITIONS APPEAR INADEQUATE, CONTRACTOR SHALL NOTIFY THE GENERAL/PRIME CONTRACTOR AND THE VA/COR TO OBTAIN DIRECTION AND APPROVALS BEFORE PROCEEDING WITH THE PREPARATION AND INSTALLATION OF THEIR WORK.

18. THE SEQUENCE FOR THE INSTALLATION OF ALL WORK SHALL BE FULLY COORDINATED WITH THE GENERAL/PRIME CONTRACTOR FIRST AND IN TURN WITH ALL CONTRACTORS AND THE VA/COR. THE SCHEDULING, SEQUENCING AND PERFORMANCE OF ALL WORK SHALL BE IN STRICT ACCORDANCE WITH SCHEDULE AS APPROVED, STIPULATED AND MODIFIED BY THE VA/COR.

19. CONTRACTOR SHALL BE RESPONSIBLE FOR ALL CORING, CUTTING, PATCHING, REPAIRING, REFINISHING, REMOVAL, REWORK AND REPLACEMENT OF ALL NEW OR EXISTING BUILDING CONSTRUCTION REQUIRED FOR THE INSTALLATION AND/OR REMOVAL OF THEIR WORK.

20. CONTRACTOR SHALL BE RESPONSIBLE TO X-RAY ALL CONCRETE SLABS AND MASONRY CONSTRUCTION IN PLACE PRIOR TO ANY CORING IF REQUIRED.

21. ALL PATCHING, REPAIRING AND REFINISHING WORK SHALL BE PERFORMED BY THOSE REGULARLY INVOLVED IN THAT TRADE AND SHALL MATCH THE ADJACENT CONSTRUCTION AS CLOSELY AS POSSIBLE TO PROVIDE A LIKE NEW CONDITION THAT IS NOT DISTINGUISHABLE AS A PATCH/REPAIR. CARE SHALL BE TAKEN SO AS NOT TO DAMAGE ANY EXISTING BUILDING CONSTRUCTION OR ITEMS THAT ARE TO REMAIN. ANY EXISTING FINISHES THAT ARE DAMAGED DURING THE INSTALLATION OF NEW WORK OR REMOVAL OF EXISTING WORK, IF REQUIRED, SHALL BE REPAIRED AND REPLACED TO THE SATISFACTION OF THE VA/COR. REFER TO ARCHITECTURAL DRAWINGS AND SEQUENCE OF CONSTRUCTION FOR BUILDING CONSTRUCTION THAT IS SUBJECT TO PATCHING, REPAIRING, REFINISHING, AND REMOVAL/REPLACEMENT AT THE TIME THAT WORK IS TO BE PREFORMED.

22. WHERE THERE IS EVIDENCE THAT WORK OF ONE TRADE WILL INTERFERE WITH WORK OF OTHER TRADES, ALL TRADES SHALL COORDINATE WITH THE GENERAL/PRIME CONTRACTOR AND MEET ON THE JOB SITE TO WORK OUT SPACE CONDITIONS AND MAKE SATISFACTORY ADJUSTMENTS TO INSTALLATION OF THE NEW WORK. CONTRACTORS SHALL VERIFY EXACT LOCATIONS OF ALL DEVICES AND EQUIPMENT WITH FIELD CONDITIONS, SHOP DRAWINGS, AND WORK OF OTHER TRADES PRIOR TO PERFORMING ANY ROUGH-IN WORK. EACH CONTRACTOR SHALL BE RESPONSIBLE, AT THEIR OWN EXPENSE, FOR THE REMOVAL AND REINSTALLATION OF ANY PART OF THEIR WORK THAT WAS INSTALLED WITHOUT CONSULTING AND COORDINATING WITH OTHER TRADES AS WELL AS OBTAINING THE GENERAL/PRIME CONTRACTORS APPROVAL BEFORE INSTALLING THEIR WORK.

23. CONTRACTOR SHALL STORE ALL MATERIALS AND EQUIPMENT SHIPPED TO THE SITE IN A PROTECTED AREA APPROVED BY THE VA/COR. IF MATERIAL IS ALLOWED TO BE STORED OUTSIDE OF THE BUILDING, IT MUST BE STORED OFF THE GROUND A MINIMUM OF SIX INCHES (6"), SET ON 6 X 6 PLANKS OR WOOD PALLETS, AND BE COMPLETELY COVERED WITH WATERPROOF TARPS OR HEAVY DUTY VISQUEEN THAT IS PROPERLY TIED DOWN AND SECURED. ALL PIPING AND DUCTWORK WILL HAVE THE ENDS CLOSED/SEALED TO KEEP OUT DIRT AND OTHER DEBRIS.

24. CONTRACTOR SHALL SUBMIT SHOP DRAWINGS TO THE VA/COR FOR APPROVAL, AS REQUIRED IN THE PROJECT SPECIFICATIONS, PRIOR TO THE START OF INSTALLATION OF ANY WORK REQUIRING AN APPROVED SUBMITTAL. AN APPROVED SUBMITTAL REQUIRES THE VA/COR APPROVAL AND THE SUCCESSFUL REVIEW OF THE A/E, BOTH PROPERLY DOCUMENTED ON THE FINAL SHOP DRAWING TO BE ISSUED FOR ASSEMBLY AND/OR CONSTRUCTION.

25. CONTRACTOR SHALL FURNISH AS-BUILT DRAWINGS TO THE VA/COR BEFORE THE CLOSE-OUT OF THE PROJECT AS PER THE CONTRACT REQUIREMENTS. THE AS-BUILT DRAWINGS SHALL BE SUBMITTED IN THE VA APPROVED ELECTRONIC REPRODUCIBLE FORMAT.

26. THIS CONTRACTOR SHALL BE RESPONSIBLE FOR THE STARTUP, TESTING, ADJUSTMENTS AND MODIFICATIONS REQUIRED OF ALL EQUIPMENT AND SYSTEMS THAT ARE A PART OF THEIR WORK.

27. THIS CONTRACTOR SHALL PROVIDE A COMPETENT OPERATING TECHNICIAN TO INSTRUCT THE VA PERSONNEL IN THE OPERATION AND MAINTENANCE OF THE EQUIPMENT ALONG WITH THE OPERATION OF THE EQUIPMENT CONTROLS.

28. UPON COMPLETION OF THE WORK, THIS CONTRACTOR SHALL REVIEW AND CHECK THEIR ENTIRE PORTION OF WORK, CLEAN EQUIPMENT AND DEVICES. REMOVE SURPLUS MATERIALS AND RUBBISH FROM THE PROPERTY AND LEAVE THE WORK IN NEAT AND CLEAN ORDER AND IN COMPLETE WORKING CONDITION. EACH RESPECTIVE CONTRACTOR SHALL BE RESPONSIBLE FOR THE REMOVAL OF ANY CARTONS, DEBRIS, EQUIPMENT, ETC., INSTALLED BY THEM INCLUDING EQUIPMENT FURNISHED BY OTHERS AND UNPACKED OR REMOVED FROM CARTONS BY THEM.

29. ALL ITEMS THAT REQUIRE ACCESS, SUCH AS FOR OPERATING, CLEANING, SERVICING, MAINTENANCE, AND CALIBRATION, SHALL BE EASILY AND SAFELY ACCESSIBLE BY PERSONS STANDING AT FLOOR LEVEL OR BY STANDING ON PERMANENT PLATFORMS WITHOUT THE USE OF PORTABLE LADDERS. EXAMPLES OF THESE ITEMS INCLUDE, BUT ARE NOT LIMITED TO ALL TYPES OF VALVES, FILTERS AND STRAINERS, TRANSMITTERS AND CONTROL DEVICES. PRIOR TO COMMENCING INSTALLATION WORK, REFER CONFLICTS BETWEEN THIS REQUIREMENT AND CONTRACT DRAWINGS TO THE VA/COR FOR RESOLUTION. FAILURE OF THE CONTRACTOR TO NOTIFY THE VA/COR AND RESOLVE ANY SUCH ISSUES WILL NOT RELIEVE THE CONTRACTOR OF THE RESPONSIBILITY FOR CORRECTING ANY SUCH CONDITIONS AT NO ADDITIONAL COST TO THE VA.

30. UNLESS INDICATED OTHERWISE, THE ARCHITECT/ENGINEER MAKES NO REPRESENTATION AS TO WHETHER OR NOT ANY HAZARDOUS OR CONTAMINATED MATERIALS (INCLUDING BUT NOT LIMITED TO ASBESTOS, PCB'S, LEAD, CONTAMINATED SOILS, ETC.) ARE PRESENT WITHIN THE BUILDING OR ON THE SITE. WORK SHOWN ON THE DRAWINGS AND/OR INDICATED IN THE SPECIFICATIONS SHALL NOT BE CONSTRUED TO CALL FOR CONTACT WITH ANY OF THESE MATERIALS. IF THESE MATERIALS ARE ENCOUNTERED OR SUSPECTED, THE CONTRACTOR SHALL NOT DISTURB THEM AND SHALL CONTACT THE GENERAL/PRIME CONTRACTOR AND THE VA/COR IMMEDIATELY.

29. ALL EQUIPMENT DEVICES REQUIRING PIPING CONNECTIONS SHALL BE INSTALLED WITH UNIONS IN SUCH A MANNER TO FACILITATE EASY REMOVAL AND MAINTENANCE OF EQUIPMENT WITHOUT DISRUPTING SERVICE AND CAUSING MAJOR PIPING REVISIONS.

32. ALL PIPING CONNECTIONS BETWEEN DISSIMILAR METALS SHALL BE MADE WITH THE APPROPRIATE DIELECTRIC UNIONS, COUPLINGS OF FITTINGS.

33. IN CASE OF CONFLICTS OR DISCREPANCIES WITHIN OR AMONG THE CONTRACT DRAWINGS, THE BETTER QUALITY, MORE STRINGENT REQUIREMENTS, OR GREATER QUANTITY OF WORK, AS DETERMINED BY THE VA/CO DURING BIDDING AND/OR DURING THE CONSTRUCTION PHASES, SHALL BE PROVIDED.

34. MEP CONTRACTOR SHALL BE RESPONSIBLE TO VERIFY THE PRESENCE OF EXISTING REINFORCING BARS AND CONDUIT AS WELL AS DETERMINE ITS EXACT LOCATION IN THE EXISTING FLOOR SLAB PRIOR TO ANY CORING AND/OR DRILLING WORK TAKING PLACE.

35. THE DRAWINGS, SCHEDULES AND SPECIFICATIONS HAVE BEEN PREPARED USING ONE MANUFACTURER FOR EACH PIECE OF EQUIPMENT AS THE BASIS OF DESIGN FOR PERFORMANCE AS WELL AS THE BASIS FOR DIMENSIONAL DESIGN. SEE THE "BASIS OF DESIGN (BOD)- PROTOCOLS" ESTABLISHED IN THE GENERAL DRAWINGS THAT ARE TO BE ADHERED TO FOR ALL EQUIPMENT, MATERIAL OR ASSEMBLY EQUIVALENT SUBSTITUTIONS BEING REQUESTED FOR CONSIDERATION. IF THE CONTRACTOR PURCHASES EQUIPMENT OR MATERIAL FROM A SPECIFIED ACCEPTABLE MANUFACTURER, BUT NOT THE SCHEDULED MANUFACTURER USED FOR THE BASIS OF DESIGN, THE CONTRACTOR SHALL BE RESPONSIBLE FOR CHECKING ALL DIMENSIONS OF THE EQUIPMENT TO VERIFY THAT IT WILL FIT IN THE SPACE SHOWN ON THE DRAWINGS. MINOR DEVIATIONS IN DIMENSIONS WILL BE PERMITTED PROVIDED THE RATINGS MEET THOSE SHOWN ON THE DRAWINGS AND THE EQUIPMENT WILL PHYSICALLY FIT INTO THE SPACE ALLOCATED WITH SUITABLE ACCESS AROUND EQUIPMENT FOR OPERATION AND MAINTENANCE OF THE EQUIPMENT. WHEN EQUIPMENT SUBMITTED FOR REVIEW DOES NOT MEET THE PHYSICAL SIZE OR ARRANGEMENT OF THAT SCHEDULED AND SPECIFIED, CONTRACTOR SHALL BE FULLY RESPONSIBLE FOR ALL ALTERATIONS REQUIRED TO ACCOMMODATE SUCH EQUIPMENT AT NO ADDITIONAL COST TO THE VA. CONTRACTOR WILL ALSO BE FULLY RESPONSIBLE FOR ALL COSTS OF ANY ADDITIONAL WORK REQUIRED BY OTHER CONTRACTORS, AND THE VA IN ORDER TO MAKE CHANGES WHICH WOULD ALLOW THE EQUIPMENT TO FIT IN THE SPACE AND FUNCTION AS INTENDED.

MECHANICAL EQUIPMENT NOTES:

1. ALL EQUIPMENT/DEVICES SHALL BE AND OF FIRST RATE QUALITY AND IS TO BEAR THE APPROPRIATE AGA, CSA OR UL APPROVED LABELS, LISTINGS, AND CERTIFICATIONS FOR THE SPECIFIC DESIGN PURPOSE.

2. ALL EQUIPMENT SOUND LEVELS SHALL NOT EXCEED 50 DB AT PROPERTY LINE.

3. ALL INTERCONNECTING WIRING AT UNIT SHALL BE FACTORY PRE-WIRED AND REQUIRE ONLY ONE (1) POWER CONNECTION TO THE UNIT BY THE ELECTRICAL CONTRACTOR.

4. SUBMIT THE REQUIRED NUMBER OF COPIES OF EACH CATALOG CUT, FOR THE EQUIPMENT SPECIFIED, TO THE VA/COR FOR APPROVAL AND TO THE A/E FOR HIS/HER SUCCESSFUL REVIEW PRIOR TO THE BEGINNING OF CONSTRUCTION. THIS CONTRACTOR SHALL ALSO ASSEMBLE PRINTED INSTRUCTIONS FOR THE OPERATION AND MAINTENANCE OF EACH ITEM INSTALLED AND BIND TOGETHER WITH EQUIPMENT CUTS AND CONTROL WIRING DIAGRAMS. SUBMIT THE REQUIRED NUMBER OF COPIES TO THE VA/COR AND TO THE A/E FOR HIS/HER SUCCESSFUL REVIEW.

5. THIS CONTRACTOR SHALL FURNISH AND INSTALL ALL STRUCTURAL STEEL MEMBERS, SLEEVES, AND SHIMS REQUIRED TO LEVEL AND SUPPORT EQUIPMENT.

6. CONTRACTOR AND/OR MANUFACTURER SHALL VERIFY AND CERTIFY THAT THE CHARACTERISTICS OF THE EQUIPMENT BEING SUBMITTED FOR REVIEW MEETS THE CAPACITY AND DUTY SPECIFIED. WHEN EQUIPMENT SUBMITTED FOR REVIEW REQUIRES MODIFICATIONS TO THE WORK OF OTHER CONTRACTORS, SUBMITTING CONTRACTOR SHALL BE FULLY RESPONSIBLE FOR ALL COSTS FOR ADDITIONAL WORK REQUIRED BY OTHER CONTRACTORS, THE VA OR THE A/E TO MAKE CHANGES WHICH WOULD ALLOW THE EQUIPMENT TO FUNCTION SAFELY AND PROPERLY.

MECHANICAL SYMBOLS AND ABBREVIATIONS

AD	ACCESS DOOR
ACH	AIR CHANGES PER HOUR
BAS	BUILDING AUTOMATION SYSTEM
bhp	BRAKE HORSEPOWER
BOD	BASIS OF DESIGN
BOP	BOTTOM OF PIPE
Btu	BRITISH THERMAL UNIT
Btuh	BRITISH THERMAL UNIT PER HOUR
CC	COOLING COIL
cfm	CUBIC FEET PER MINUTE
CO	CONTRACTING OFFICER
COR	CONTRACTING OFFICER'S REPRESENTATIVE
CUH	CABINET UNIT HEATER
D	DAMPER
(D)	DEMOLISH AND REMOVE
DB	DRY BULB
DH	DOOR HEATER
DN.	DOWN
DR	DRAIN LINE
(E)	EXISTING TO REMAIN
EAT	ENTERING AIR TEMPERATURE
EF	EXHAUST FAN
ESP	EXTERNAL STATIC PRESSURE
EWT	ENTERING WATER TEMPERATURE
F	FAHRENHEIT
FPF	FINS PER FOOT
fpm	FEET PER MINUTE
FT	FLASH TANK
G	NATURAL GAS
GC	GENERAL CONTRACTOR
GLY	GLYCOL
GPM	GALLONS PER MINUTE
Hp	HORSEPOWER
HWC	HOT WATER COIL
HWR	HOT WATER RETURN
HWS	HOT WATER SUPPLY
HX	HEAT EXCHANGER
LAT	LEAVING AIR TEMPERATURE
LPCS	LOW PRESSURE CLEAN STEAM
LWT	LEAVING WATER TEMPERATURE
MCA	MINIMUM CIRCUIT AMPS
MOCP	MAXIMUM OVERCURRENT PROTECTION
MU	MAKE-UP WATER
OA	OUTSIDE AIR
ODP	OZONE DEPLETION POTENTIAL
NK	NECK
PCR	PUMPED CONDENSATE RETURN
PD	PRESSURE DROP
PHC	PREHEAT COIL
PP	PRESSURE PUMP
PSI	POUNDS PER SQUARE INCH
PRV	PRESSURE REDUCING VALVE
RPM	REVOLUTIONS PER MINUTE
RO	REVERSE OSMOSIS
SF	SUPPLY FAN
SOW	SCOPE OF WORK
SP	STATIC PRESSURE
TC	TEMPERATURE CONTROL
TSP	TOTAL STATIC PRESSURE
TYP.	TYPICAL
VD	VOLUME DAMPER
VFD	VARIABLE FREQUENCY DRIVE
WB	WET BULB
W.C.	WATER COLUMN
WG	WATER GAUGE
EAH	HOOD EXHAUST
EA	EXHAUST AIR
SAH	SUPPLY AIR HOT
SAC	SUPPLY AIR COLD
SA	SUPPLY AIR
RA	RETURN AIR

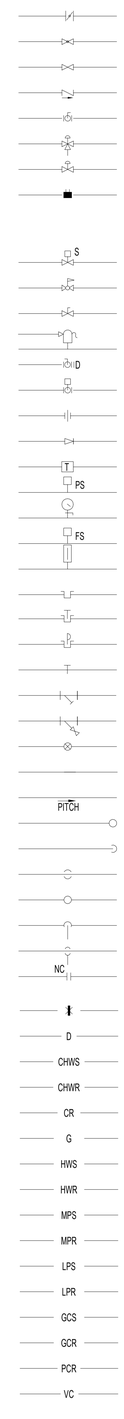

BUTTERFLY VALVE
GLOBE VALVE
GATE VALVE
CHECK VALVE
BALL VALVE (2" & SMALLER)
BUTTERFLY VALVE (2 1/2" & LARGER)
3 WAY CONTROL VALVE
2 WAY CONTROL VALVE
CIRCUIT BALANCING VALVE W/BALANCING PORTS (8" AND UNDER) CIRCUIT FLOW INDICATOR W/BALANCING PORTS AND MEMORY STOP BUTTERFLY VALVE FOR BALANCING (10" AND ABOVE)
SOLENOID VALVE
PRESSURE REDUCING VALVE
PLUG VALVE (GAS COCK)
PRESSURE RELIEF VALVE (PIPE TO FLOOR DRAIN)
DRAIN VALVE WITH HOSE THREADED OUTLET
AUTOMATIC BALL OR BUTTERFLY VALVE
PIPE UNION (OR FLANGES IF 2 1/2" OR LARGER PIPE)
CONCENTRIC PIPE REDUCER OR INCREASER
STEAM TRAP ASSEMBLY
PRESSURE SWITCH (WITH THREAD OR WELD-O-LET)
PRESSURE GAUGE AND NEEDLE VALVE
FLOW SWITCH (WITH THREAD OR WELD-O-LET)
THERMOMETER (WITH PIPE WELL)
THERMOMETER WELL
TEMPERATURE WELL WITH DDC SENSOR
PRESSURE WELL WITH DDC SENSOR
PRESSURE/TEMPERATURE PLUG WITH CAP
STRAINER
STRAINER WITH BLOWDOWN VALVE
REFRIGERANT EXPANSION VALVE
DIRECTION OF FLOW
PITCH OF PIPE (DOWN)
PIPE ELBOW (TURNED UP)
PIPE ELBOW (TURNED DOWN)
PIPE TEE DOWN (DROP)
PIPE TEE UP
PIPE TEE UP OR ANGLE
PIPE TEE DOWN OR ANGLE
NEW CONNECTION
ANCHOR
DRAIN LINE
CHILLED WATER SUPPLY
CHILLED WATER RETURN
CONDENSATE RETURN
NATURAL GAS
HOT WATER SUPPLY
HOT WATER RETURN
MEDIUM PRESSURE STEAM SUPPLY
MEDIUM PRESSURE CONDENSATE RETURN
LOW PRESSURE STEAM (UP TO 15 PSIG)
LOW PRESSURE CONDENSATE (UP TO 15 PSIG)
CHILLED GLYCOL WATER SUPPLY
CHILLED GLYCOL WATER RETURN
PUMPED CONDENSATE RETURN
VACUUM CONDENSATE

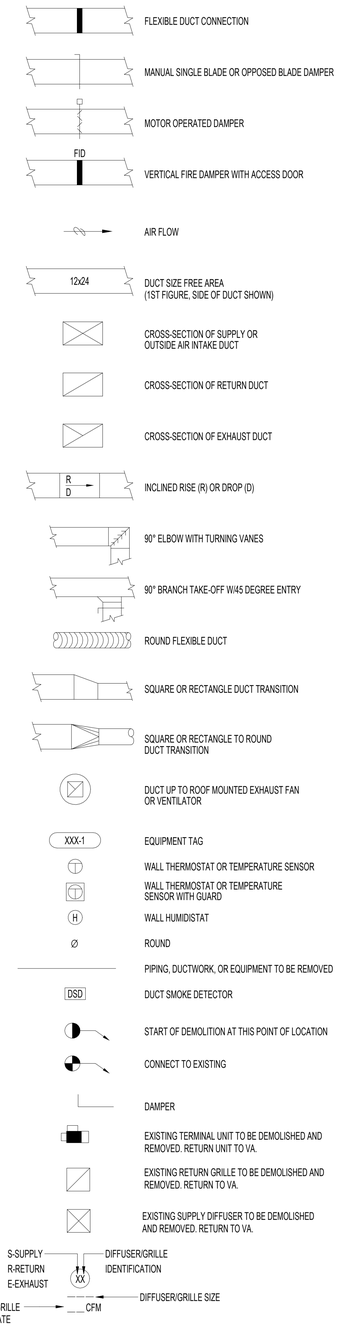

FLEXIBLE DUCT CONNECTION
MANUAL SINGLE BLADE OR OPPOSED BLADE DAMPER
MOTOR OPERATED DAMPER
VERTICAL FIRE DAMPER WITH ACCESS DOOR
AIR FLOW
DUCT SIZE FREE AREA (1ST FIGURE, SIDE OF DUCT SHOWN)
CROSS-SECTION OF SUPPLY OR OUTSIDE AIR INTAKE DUCT
CROSS-SECTION OF RETURN DUCT
CROSS-SECTION OF EXHAUST DUCT
INCLINED RISE (R) OR DROP (D)
90° ELBOW WITH TURNING VANES
90° BRANCH TAKE-OFF W/45 DEGREE ENTRY
ROUND FLEXIBLE DUCT
SQUARE OR RECTANGLE DUCT TRANSITION
SQUARE OR RECTANGLE TO ROUND DUCT TRANSITION
DUCT UP TO ROOF MOUNTED EXHAUST FAN OR VENTILATOR
EQUIPMENT TAG
WALL THERMOSTAT OR TEMPERATURE SENSOR
WALL THERMOSTAT OR TEMPERATURE SENSOR WITH GUARD
WALL HUMIDISTAT
ROUND
PIPING, DUCTWORK, OR EQUIPMENT TO BE REMOVED
DUCT SMOKE DETECTOR
START OF DEMOLITION AT THIS POINT OF LOCATION
CONNECT TO EXISTING
DAMPER
EXISTING TERMINAL UNIT TO BE DEMOLISHED AND REMOVED. RETURN UNIT TO VA.
EXISTING RETURN GRILLE TO BE DEMOLISHED AND REMOVED. RETURN TO VA.
EXISTING SUPPLY DIFFUSER TO BE DEMOLISHED AND REMOVED. RETURN TO VA.

VA CONTRACT NO:36C77623C0052

Revisions:	Date:
100% CONSTRUCTION + BID DRAWING	10/06/2023
100% CONSTRUCTION + BID DRAWING	09/28/2023
95% CONSTRUCTION DOCUMENTS	09/01/2023
65% CONSTRUCTION DOCUMENTS	07/27/2023
35% CONSTRUCTION DOCUMENTS	06/26/2023

CONSULTANT

ARCHITECT/ENGINEER OF RECORD

BANCROFT ARCHITECTS + ENGINEERS
3300 Dundee Rd.
Northbrook, IL 60062
T: 847.952.9362
www.bancroft-ae.com

STAMP

LICENSED PROFESSIONAL ENGINEER RAED HAMID 062.065548 OF ILLINOIS
10-06-2023

Office of Construction and Facilities Management

VA U.S. Department of Veterans Affairs

Drawing Title: MECHANICAL - GENERAL NOTES, SYMBOLS AND ABBREVIATIONS

Approved: Project Director

Phase: 100% CONSTRUCTION + BID DRAWINGS

FULLY SPRINKLERED

Project Title: G.V. (Sonny) Montgomery VAMC EHRM-TASS

Project Number: 586-22-703

Building Number: R+E

Location: 1500 E Woodrow Wilson Ave, Jackson, MS 39216

Drawing Number: M-001

Issue Date: 10/06/23 | Checked: DGG | Drawn: MB

VA FORM 08-6231

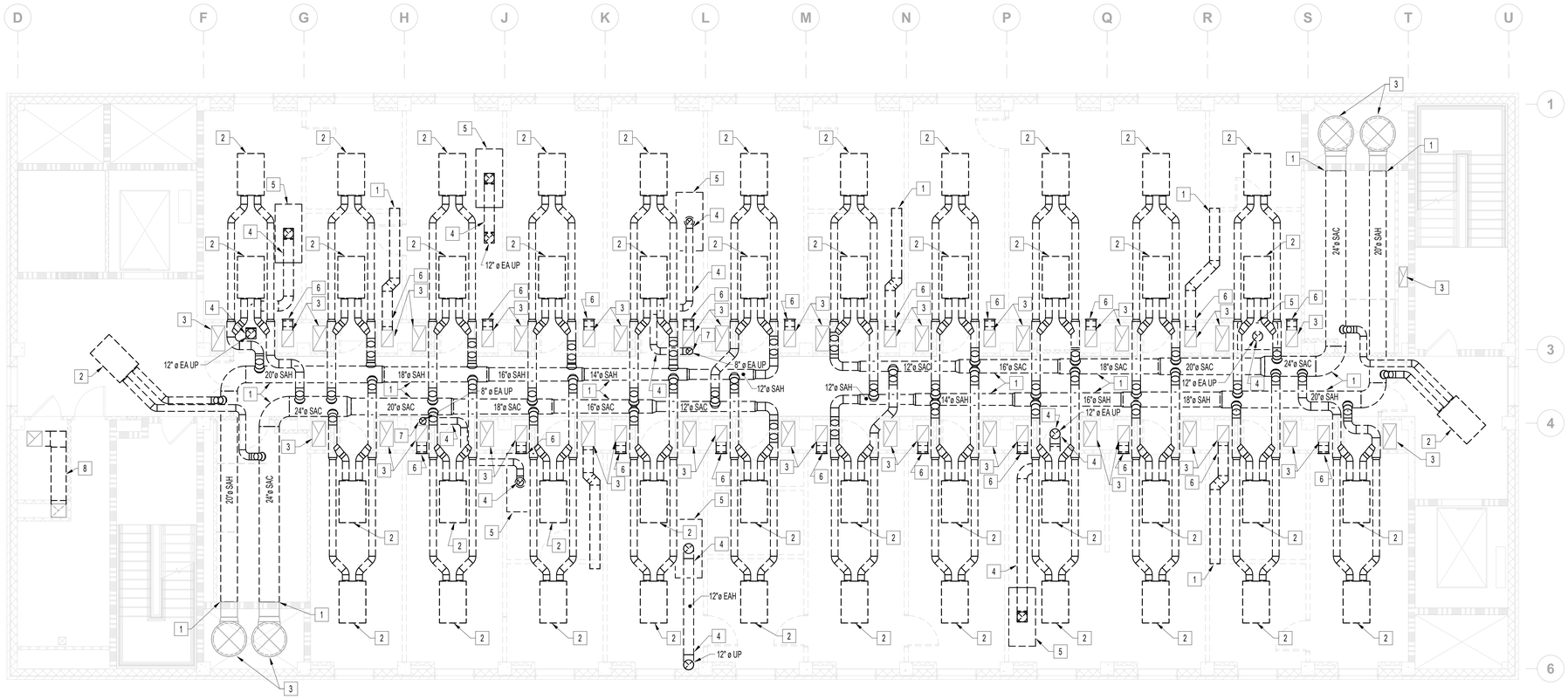

N

1 MECHANICAL - DEMOLITION PLAN - 4TH FLOOR

3/16" = 1'-0"

GENERAL DEMOLITION NOTES

A. REMOVE ALL DUCTWORK DIFFUSERS, GRILLES, INCLUDING ASSOCIATED INSULATION, HANGERS, SUPPORTS, ETC. SHOWN IN DASHED UNLESS NOTED OTHERWISE.

B. ALL ABANDONED OPENINGS TO BE CLOSED, REFER TO ARCHITECTURAL AND STRUCTURAL DRAWINGS.

C. COORDINATE ALL MECHANICAL SERVICE OUTAGES WITH COR.

D. DUCTWORK AND PIPING MAY BE SHOWN OFFSET FROM IT'S ACTUAL LOCATION FOR CLARITY. FIELD VERIFY EXACT LOCATIONS.

E. PRIOR TO BEGINNING WORK, RECORD THE EQUIPMENT DATA ON AHU 1&2 (MANUFACTURER, MODEL, SIZE, TYPE, COIL(S) SIZE, COIL(S) CAPACITY, AND FLOW RATES.) PHYSICALLY TRACE THE EXISTING SUPPLY/RETURN AIR DISTRIBUTION SYSTEM. CONFIRM ALL ZONES. MEASURE AND RECORD THE CFM AND STATIC PRESSURE IN EACH SUPPLY AND RETURN DUCT MAIN PRIOR TO BRANCH TAKEOFFS AT EACH FLOOR SERVED BY THIS AHU. MEASURE AND RECORD THE WATER AND STEAM FLOW RATES IN EACH PIPING MAIN PRIOR TO BRANCH TAKEOFFS AT EACH FLOOR. ALL TESTING SHALL FOLLOW THE PROCEDURES OUTLINED IN THE SPECIFICATIONS AND SHALL BE SUBMITTED FOR RECORD.

X MECHANICAL DEMOLITION KEY NOTES

1. REMOVE ALL DUCTWORK BACK TO MAIN, HANGERS, INSULATION, ETC. SHOWN DASHED AND CAP DUCT AT CHASE. CONTRACTOR TO NOT OPEN CHASE.
2. REMOVE DUAL DECK TERMINAL BOXES, THERMOSTATS, AND ALL ASSOCIATED CONTROLS, HANGERS, SUPPORTS AND INSULATION.
3. EXISTING DUCTWORK TO REMAIN, PROTECT DURING CONSTRUCTION.
4. REMOVE ALL ISOLATION DUCTWORK BACK TO EXHAUST FAN ON ROOF. HANGERS, INSULATION, ETC. SHOWN DASHED. CONTRACTOR TO PATCH FLOOR. REFER TO ARCHITECTURE PLANS.
5. REMOVE EXISTING EXHAUST HOOD AND ALL ASSOCIATED CONTROLS.
6. REMOVE RETURN GRILLE ON CHASE. CAP AND SEAL CHASE. PATCH CHASE REFER TO ARCHITECTURAL PLANS.
7. REMOVE EXHAUST DUCT UP TO CHASE. CONTRACTOR TO NOT OPEN UP CHASE. CONTINUE REMOVAL IN 5TH FLOOR MECHANICAL ROOM.
8. REMOVE EXHAUST OFFSET DUCTWORK. PREPARE DUCT CONNECTIONS FOR NEW OFFSET ROUTE.

VA CONTRACT NO:36C77623C0052

100% CONSTRUCTION + BID DRAWING	10/06/2023
100% CONSTRUCTION + BID DRAWING	09/28/2023
95% CONSTRUCTION DOCUMENTS	09/01/2023
65% CONSTRUCTION DOCUMENTS	07/27/2023
35% CONSTRUCTION DOCUMENTS	06/26/2023
Revisions:	Date:

CONSULTANT

ARCHITECT/ENGINEER OF RECORD

BANCROFT ARCHITECTS + ENGINEERS
3300 Dundee Rd.
Northbrook, IL 60062
T: 847.952.9362
www.bancroft-ae.com

STAMP

LICENSED PROFESSIONAL ENGINEER RAED HAMID 062.065548 OF ILLINOIS
10-06-2023

Office of Construction and Facilities Management

VA U.S. Department of Veterans Affairs

Drawing Title: MECHANICAL - DEMOLITION PLAN - 4TH FLOOR

Approved: Project Director

Phase: 100% CONSTRUCTION + BID DRAWINGS

FULLY SPRINKLERED

Project Title: G.V. (Sonny) Montgomery VAMC EHRM-TASS

Location: 1500 E Woodrow Wilson Ave, Jackson, MS 39216

Issue Date: 10/06/23 | Checked: DGG | Drawn: MB

Project Number: 586-22-703

Building Number: R+E

Drawing Number: MD104

VA FORM 08-6231

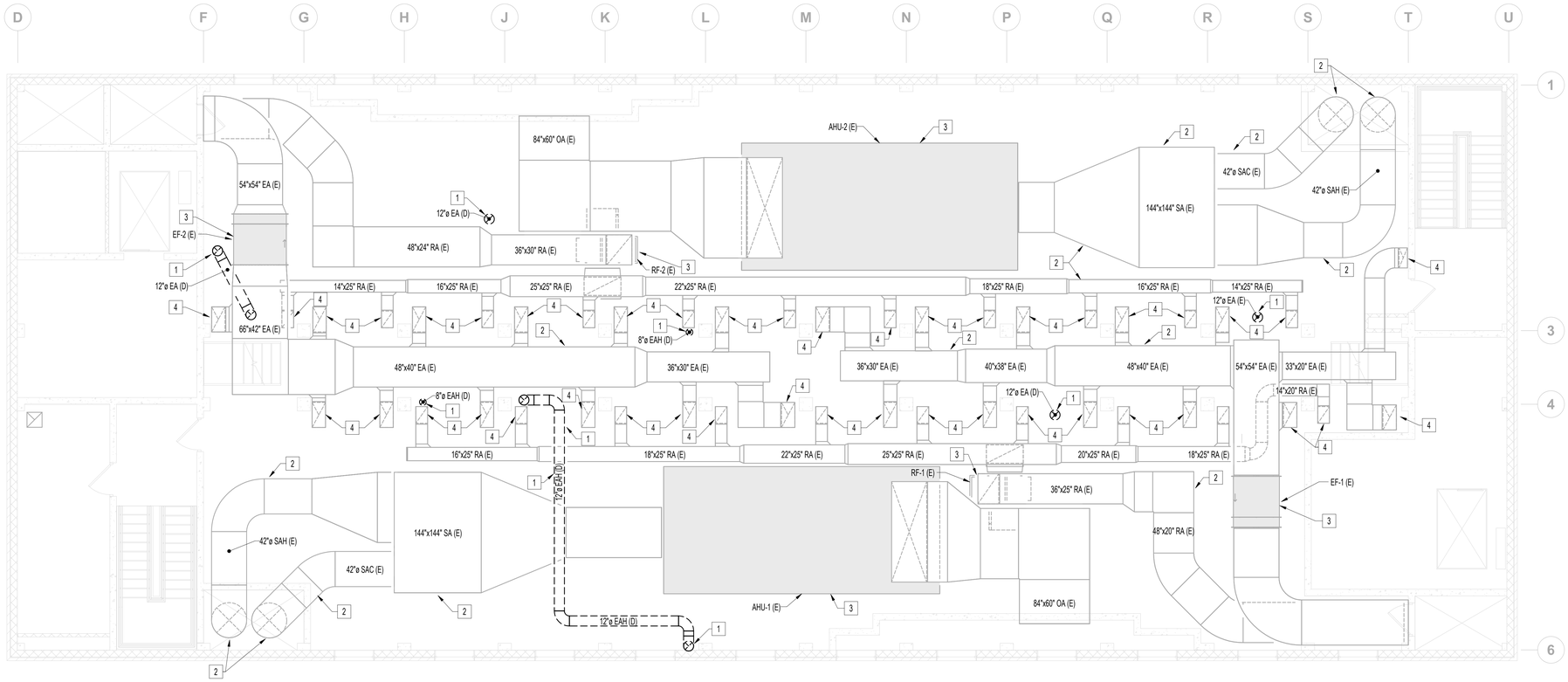

N

1 **MECHANICAL - DEMOLITION PLAN - 5TH FLOOR**

3/16" = 1'-0"

GENERAL DEMOLITION NOTES

A. ANY DUCTWORK AND PIPING THAT IS EXISTING TO REMAIN, THAT IS CRUSHED OR DAMAGED IN ITS CURRENT CONDUITION OR AS A RESULT OF CONSTRUCTION, SHALL BE REPLACED WITH NEW.

B. REMOVE ALL DUCTWORK DIFFUSERS, GRILLES, INCLUDING ASSOCIATED INSULATION, HANGERS, SUPPORTS, ETC. SHOWN IN DASHED UNLESS NOTED OTHERWISE.

C. ALL ABANDONED OPENINGS TO BE CLOSED, REFER TO ARCHITECTURAL AND STRUCTURAL DRAWINGS.

D. COORDINATE ALL MECHANICAL SERVICE OUTAGES WITH COR.

E. DUCTWORK AND PIPING MAY BE SHOWN OFFSET FROM IT'S ACTUAL LOCATION FOR CLARITY. FIELD VERIFY EXACT LOCATIONS.

F. PRIOR TO BEGINNING WORK, RECORD THE EQUIPMENT DATA ON AHU 1&2 (MANUFACTURER, MODEL, SIZE, TYPE, COIL(S) SIZE, COIL(S) CAPACITY, AND FLOW RATES.) PHYSICALLY TRACE THE EXISTING SUPPLY/RETURN AIR DISTRIBUTION SYSTEM. CONFIRM ALL ZONES. MEASURE AND RECORD THE CFM AND STATIC PRESSURE IN EACH SUPPLY AND RETURN DUCT MAIN PRIOR TO BRANCH TAKEOFFS AT EACH FLOOR SERVED BY THIS AHU. MEASURE AND RECORD THE WATER AND STEAM FLOW RATES IN EACH PIPING MAIN PRIOR TO BRANCH TAKEOFFS AT EACH FLOOR. ALL TESTING SHALL FOLLOW THE PROCEDURES OUTLINED IN THE SPECIFICATIONS AND SHALL BE SUBMITTED FOR RECORD.

X MECHANICAL DEMOLITION KEY NOTES

1. REMOVE ALL DUCTWORK, HANGERS, INSULATION, ETC. SHOWN DASHED. PATCH FLOOR, REFER TO ARCHITECTURE PLANS.
2. EXISTING DUCTWORK TO REMAIN, PROTECT DURING CONSTRUCTION.
3. EXISTING MECHANICAL EQUIPMENT TO REMAIN, PROTECT DURING CONSTRUCTION.
4. EXISTING DUCTWORK RISER TO REMAIN, PROTECT DURING CONSTRUCTION.

VA CONTRACT NO:36C77623C0052

100% CONSTRUCTION + BID DRAWING	10/06/2023
100% CONSTRUCTION + BID DRAWING	09/28/2023
95% CONSTRUCTION DOCUMENTS	09/01/2023
65% CONSTRUCTION DOCUMENTS	07/27/2023
35% CONSTRUCTION DOCUMENTS	06/26/2023
Revisions:	Date:

CONSULTANT

ARCHITECT/ENGINEER OF RECORD

BANCROFT ARCHITECTS + ENGINEERS
3300 Dundee Rd.
Northbrook, IL 60062
T: 847.952.9362
www. bancroft-ae.com

STAMP

LICENSED PROFESSIONAL ENGINEER
RAED HAMID
062.065548
OF ILLINOIS
10-06-2023

Office of Construction and Facilities Management

VA U.S. Department of Veterans Affairs

Drawing Title: MECHANICAL - DEMOLITION PLAN - 5TH FLOOR

Approved: Project Director

Phase: 100% CONSTRUCTION + BID DRAWINGS

FULLY SPRINKLERED

Project Title: G.V. (Sonny) Montgomery VAMC EHRM-TASS

Location: 1500 E Woodrow Wilson Ave, Jackson, MS 39216

Issue Date: 10/06/23 | Checked: DGG | Drawn: MB

Project Number: 586-22-703

Building Number: R+E

Drawing Number: MD105

VA FORM 08-6231

GENERAL DEMOLITION NOTES

A. ALL ABANDONED OPENINGS TO BE CLOSED, REFER TO ARCHITECTURAL AND STRUCTURAL DRAWINGS.

B. COORDINATE ALL MECHANICAL SERVICE OUTAGES WITH COR.

X MECHANICAL DEMOLITION KEY NOTES

1. REMOVE EXHAUST FAN AND ALL ASSOCIATED CONTROLS, DUCTWORK, HANGERS, SUPPORTS AND INSULATION. CONTRACTOR TO PATCH ROOF. REFER TO ARCHITECTUR PLANS.
2. EXISTING EXHAUST FAN TO REMAIN. PROTECT DURING CONSTRUCTION.

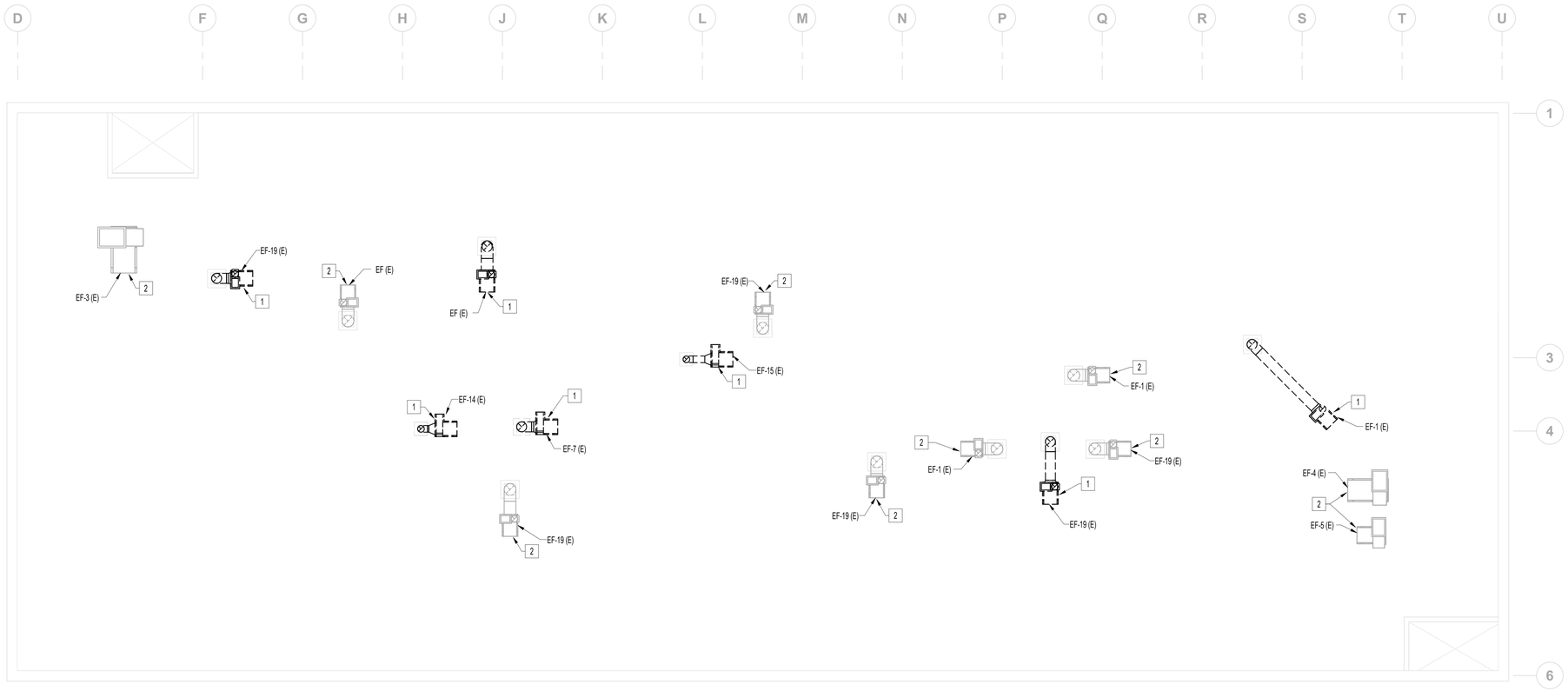

N

1 **MECHANICAL - DEMOLITION PLAN - ROOF**

3/16" = 1'-0"

VA CONTRACT NO:36C77623C0052

Revisions:	Date:
100% CONSTRUCTION + BID DRAWING	10/06/2023
100% CONSTRUCTION + BID DRAWING	09/28/2023
95% CONSTRUCTION DOCUMENTS	09/01/2023
65% CONSTRUCTION DOCUMENTS	07/27/2023
35% CONSTRUCTION DOCUMENTS	06/26/2023

CONSULTANT

ARCHITECT/ENGINEER OF RECORD

BANCROFT ARCHITECTS + ENGINEERS
3300 Dundee Rd.
Northbrook, IL 60062
T: 847.952.9362
www. bancroft-ae.com

STAMP

LICENSED PROFESSIONAL ENGINEER RAED HAMID 062.065548 OF ILLINOIS
10-06-2023

Office of Construction and Facilities Management

VA U.S. Department of Veterans Affairs

Drawing Title: MECHANICAL - DEMOLITION PLAN - ROOF

Approved: Project Director

Phase: 100% CONSTRUCTION + BID DRAWINGS

FULLY SPRINKLERED

Project Title: G.V. (Sonny) Montgomery VAMC EHRM-TASS

Location: 1500 E Woodrow Wilson Ave, Jackson, MS 39216

Issue Date: 10/06/23 | Checked: DGG | Drawn: MB

Project Number: 586-22-703

Building Number: R+E

Drawing Number: MD106

VA FORM 08-6231

GENERAL DEMOLITION NOTES

A. COORDINATE ALL MECHANICAL SERVICE OUTAGES WITH COR.

B. PIPING MAY BE SHOWN OFFSET FROM IT'S ACTUAL LOCATION FOR CLARITY. FIELD VERIFY EXACT LOCATIONS.

C. PRIOR TO BEGINNING WORK, RECORD THE EQUIPMENT DATA ON AHU 1&2 (MANUFACTURER, MODEL, SIZE, TYPE, COIL(S) SIZE, COIL(S) CAPACITY, AND FLOW RATES.) PHYSICALLY TRACE THE EXISTING SUPPLY/RETURN AIR DISTRIBUTION SYSTEM. CONFIRM ALL ZONES. MEASURE AND RECORD THE CFM AND STATIC PRESSURE IN EACH SUPPLY AND RETURN DUCT MAIN PRIOR TO BRANCH TAKEOFFS AT EACH FLOOR SERVED BY THIS AHU. MEASURE AND RECORD THE WATER AND STEAM FLOW RATES IN EACH PIPING MAIN PRIOR TO BRANCH TAKEOFFS AT EACH FLOOR. ALL TESTING SHALL FOLLOW THE PROCEDURES OUTLINED IN THE SPECIFICATIONS AND SHALL BE SUBMITTED FOR RECORD.

X MECHANICAL DEMOLITION KEY NOTES

1. REMOVE EXISTING PIPING, INSULATION, HANGERS, VALVING, ETC. CAP AT MAIN.
2. EXISTING PIPING TO REMAIN, PROTECT DURING CONSTRUCTION.
3. EXISTING MECHANICAL EQUIPMENT TO REMAIN, PROTECT DURING CONSTRUCTION.
4. REMOVE EXISTING ABANDONED WATER TREATMENT EQUIPMENT. DEMOLISH PIPING BACK TO MAIN.

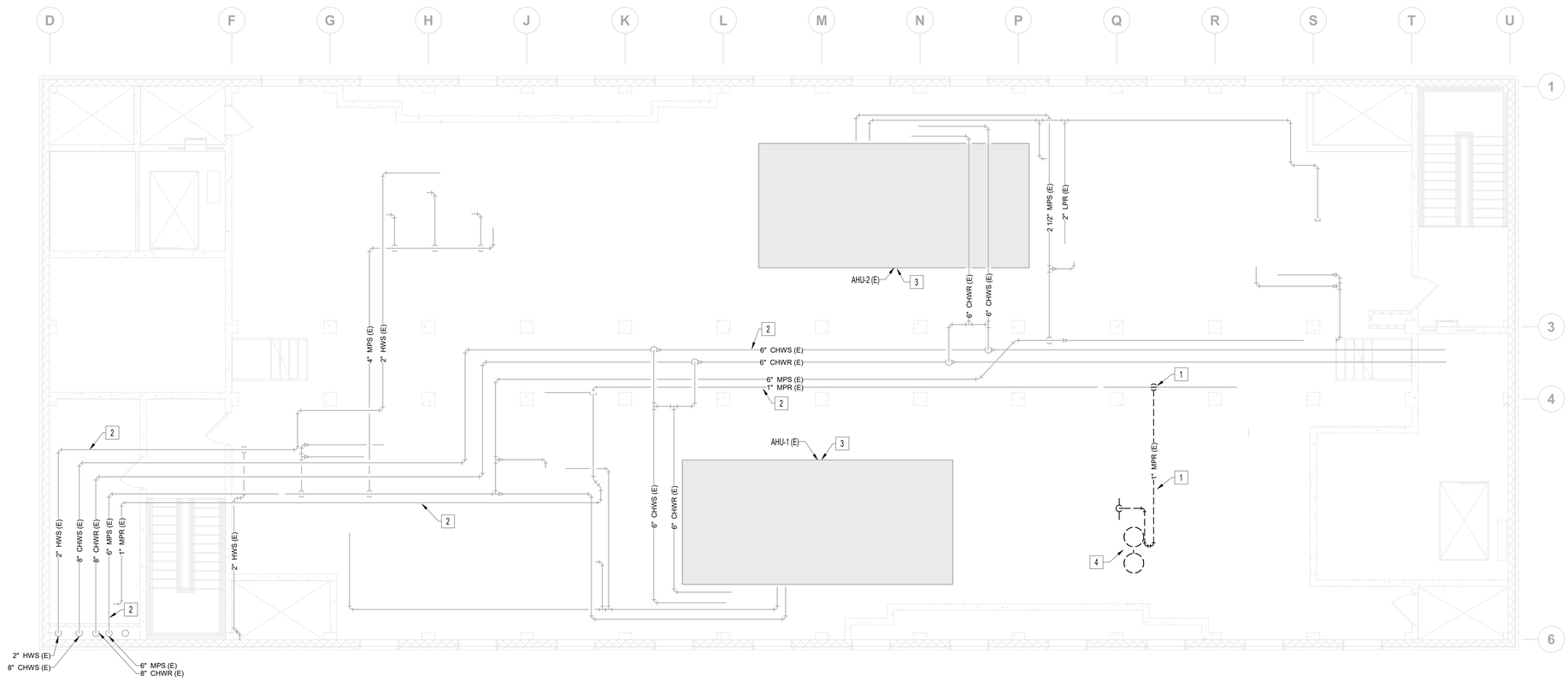

N

1 **MECHANICAL - DEMOLITION PIPING PLAN - 5TH FLOOR**

3/16" = 1'-0"

VA CONTRACT NO:36C77623C0052

100% CONSTRUCTION + BID DRAWING	10/06/2023
100% CONSTRUCTION + BID DRAWING	09/28/2023
95% CONSTRUCTION DOCUMENTS	09/01/2023
65% CONSTRUCTION DOCUMENTS	07/27/2023
35% CONSTRUCTION DOCUMENTS	06/26/2023
Revisions:	Date:

CONSULTANT

ARCHITECT/ENGINEER OF RECORD

BANCROFT ARCHITECTS + ENGINEERS
3300 Dundee Rd.
Northbrook, IL 60062
T: 847.952.9362
www. bancroft-ae.com

STAMP

LICENSED PROFESSIONAL ENGINEER
RAED HAMID
062.065548
OF ILLINOIS
10-06-2023

Office of Construction and Facilities Management

VA U.S. Department of Veterans Affairs

Drawing Title: MECHANICAL - DEMOLITION PIPING PLAN - 5TH FLOOR

Approved: Project Director

Phase: 100% CONSTRUCTION + BID DRAWINGS

FULLY SPRINKLERED

Project Title: G.V. (Sonny) Montgomery VAMC EHRM-TASS

Location: 1500 E Woodrow Wilson Ave, Jackson, MS 39216

Issue Date: 10/06/23 | Checked: DGG | Drawn: MB

Project Number: 586-22-703

Building Number: R+E

Drawing Number: MPD105

VA FORM 08-6231

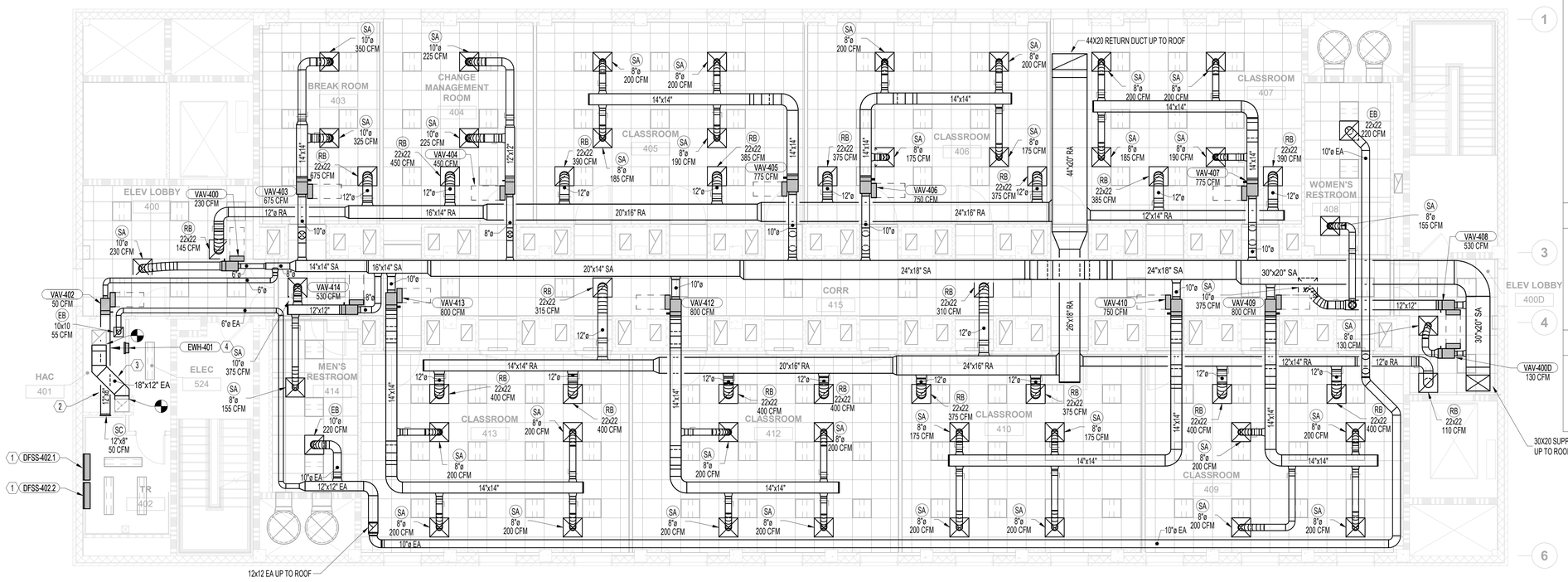

N

1 **MECHANICAL - VENTILATION PLAN - 4TH FLOOR**

3/16" = 1'-0"

GENERAL NOTES

A. CONTRACTOR SHALL REPAIR AND/OR REPLACE ALL INSULATION AT EXISTING SHEET METAL DUCTWORK WHICH BECOMES DAMAGED DURING CONSTRUCTION ACTIVITIES AND SHALL REPAIR OR REPLACE ANY INSULATION AT NEW AND OLD DUCT CONNECTIONS AND ANY MISSING OR DAMAGED INSULATION ON REUSED OR EXISTING DUCTWORK.

B. PROVIDE BALANCING DAMPER AT ALL SUPPLY DIFFUSERS, RETURN AND EXHAUST GRILLES, WHETHER OR NOT SHOWN ON DRAWINGS.

C. COORDINATE CEILING MOUNTED GRILLES AND DIFFUSERS WITH SPRINKLER HEADS, LIGHTING FIXTURES AND ALL CEILING MOUNTED DEVICES. REFER TO ARCHITECTURAL CEILING GRID DRAWINGS FOR LOCATIONS.

D. CEILING ACCESS SHALL BE PROVIDED FOR ALL HVAC EQUIPMENT AND COMPONENTS LOCATED ABOVE THE CEILING THAT REQUIRE OPERATING, CLEANING, SERVICING, MAINTENANCE, AND CALIBRATION.

E. DURING CONSTRUCTION, PROVIDE TEMPORARY CLOSURES ON ALL SUPPLY AND RETURN AIR DUCT OPENINGS BY SEALING WITH A DISPOSABLE POLYETHYLENE SHEET TO PREVENT CONSTRUCTION DUCT FROM ENTERING DUCTWORK SYSTEM OR AIR TERMINAL UNITS.

F. ALL VAV TERMINAL UNITS SHALL BE TAGGED USING A PERMANENT MARKING SYSTEM SUCH AS STENCIL OR ENGRAVED RIGID BLACK PLASTIC NAMEPLATES WITH WHITE LETTERS NOT LESS THAN 3/16" INCH HIGH. THE LABELS SHALL BE PERMANENTLY AFFIXED TO THE UNITS AND SHALL BE VISIBLE FROM MULTI DIRECTIONS ON BOTH SIDES OF THE TERMINAL UNIT. PEEL AND STICK DEVICES SHALL NOT BE PERMITTED.

G. INSTALL DUCTWORK AT ELEVATION SO AS NOT TO IMPEDE ON VAV BOX SERVICE CLEARANCE REQUIREMENTS.

H. ONCE 4TH FLOOR HAS BEEN REMOVED FROM AHU 1&2, BALANCE ALL ZONES TO PRECONSTRUCTION CFM AND STATIC PRESSURE IN EACH SUPPLY AND RETURN DUCT MAIN PRIOR TO BRANCH TAKEOFFS AT EACH FLOOR. ADJUST THE WATER AND STEAM FLOW RATES IN EACH PIPING TO AHU 1&2.

I. WHEN VA REMOVES PARTITIAN WALLS, VA MUST CONTACT MANUFACTOR OF BAS SYSTEM TO HAVE VAV BOXES CONNECTED TO 1 SINGULAR THERMOSTAT TO AVERAGE THE TERMPERATURE OF THE INCREASED AREA TO ENSURE ALL VAV BOXES TO BE WORKING TOGETRHER.

(X) MECHANICAL KEYNOTES

1. MOUNT UNIT 10'-0" A.F.F.
2. ROUTE 12x8 DUCT UNDER THE NEW OFFSET EXHAUST DUCT. AVOID ALL EXISTING PLUMBING AND DUCTWORK IN CHASE FOR NEW DUCT PENETRATION.
3. NEW EXHAUST DUCTWORK OFFSET, MATCH EXISTING DUCT SIZE.
4. SURFACE MOUNT THE ELECTRIC WALL HEATER.

FIRE BARRIER LENGEND

2 HOUR FIRE -RATED BARRIER

1 HOUR FIRE -RATED BARRIER

COMBINED 1 HR FIRE-RATED SMOKE BARRIER PARTITION

VA CONTRACT NO:36C77623C0052

100% CONSTRUCTION + BID DRAWING	10/06/2023
100% CONSTRUCTION + BID DRAWING	09/28/2023
95% CONSTRUCTION DOCUMENTS	09/01/2023
65% CONSTRUCTION DOCUMENTS	07/27/2023
Revisions:	Date:

CONSULTANT

ARCHITECT/ENGINEER OF RECORD

BANCROFT ARCHITECTS + ENGINEERS
3300 Dundee Rd.
Northbrook, IL 60062
T: 847.952.9362
www.bancroft-ae.com

STAMP

LICENSED PROFESSIONAL ENGINEER RAED HAMID 062.065548 OF ILLINOIS
10-06-2023

Office of Construction and Facilities Management

VA U.S. Department of Veterans Affairs

Drawing Title: MECHANICAL - VENTILATION PLAN - 4TH FLOOR

Approved: Project Director

Phase: 100% CONSTRUCTION + BID DRAWINGS

FULLY SPRINKLERED

Project Title: G.V. (Sonny) Montgomery VAMC EHRM-TASS

Location: 1500 E Woodrow Wilson Ave, Jackson, MS 39216

Issue Date: 10/06/23 | Checked: DGG | Drawn: MB

Project Number: 586-22-703

Building Number: R+E

Drawing Number: MV104

VA FORM 08-6231

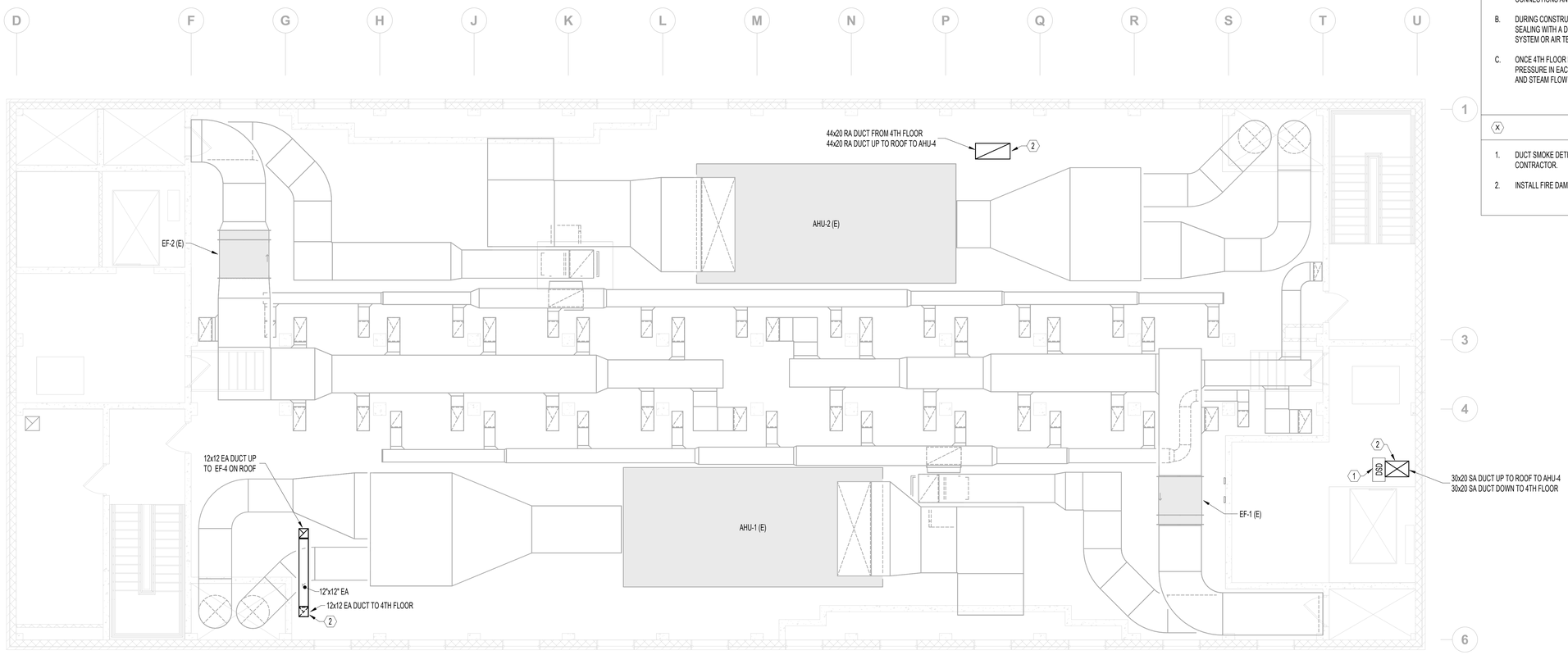

N

1 **MECHANICAL - VENTILATION PLAN - 5TH FLOOR**

3/16" = 1'-0"

GENERAL NOTES

A. CONTRACTOR SHALL REPAIR AND/OR REPLACE ALL INSULATION AT EXISTING SHEET METAL DUCTWORK WHICH BECOMES DAMAGED DURING CONSTRUCTION ACTIVITIES AND SHALL REPAIR OR REPLACE ANY INSULATION AT NEW AND OLD DUCT CONNECTIONS AND ANY MISSING OR DAMAGED INSULATION ON REUSED OR EXISTING DUCTWORK.

B. DURING CONSTRUCTION, PROVIDE TEMPORARY CLOSURES ON ALL SUPPLY AND RETURN AIR DUCT OPENINGS BY SEALING WITH A DISPOSABLE POLYETHYLENE SHEET TO PREVENT CONSTRUCTION DUCT FROM ENTERING DUCTWORK SYSTEM OR AIR TERMINAL UNITS.

C. ONCE 4TH FLOOR HAS BEEN REMOVED FROM AHU 1&2, BALANCE ALL ZONES TO PRECONSTRUCTION CFM AND STATIC PRESSURE IN EACH SUPPLY AND RETURN DUCT MAIN PRIOR TO BRANCH TAKEOFFS AT EACH FLOOR. ADJUST THE WATER AND STEAM FLOW RATES IN EACH PIPING TO AHU 1&2.

MECHANICAL KEYNOTES

1. DUCT SMOKE DETECTOR, SHOWN FOR REFERENCE ONLY, TO BE PROVIDED AND INSTALLED BY ELECTRICAL CONTRACTOR.
2. INSTALL FIRE DAMPER AT FLOOR LEVEL.

VA CONTRACT NO:36C77623C0052

100% CONSTRUCTION + BID DRAWING	10/06/2023
100% CONSTRUCTION + BID DRAWING	09/28/2023
95% CONSTRUCTION DOCUMENTS	09/01/2023
65% CONSTRUCTION DOCUMENTS	07/27/2023
Revisions:	Date:

CONSULTANT

ARCHITECT/ENGINEER OF RECORD

BANCROFT ARCHITECTS + ENGINEERS
3300 Dundee Rd.
Northbrook, IL 60062
T: 847.952.9362
www.bancroft-ae.com

STAMP

LICENSED PROFESSIONAL ENGINEER
RAED HAMID
062.065548
OF ILLINOIS
10-06-2023

Office of Construction and Facilities Management

VA U.S. Department of Veterans Affairs

Drawing Title: MECHANICAL - VENTILATION PLAN - 5TH FLOOR

Approved: Project Director

Phase: 100% CONSTRUCTION + BID DRAWINGS

FULLY SPRINKLERED

Project Title: G.V. (Sonny) Montgomery VAMC EHRM-TASS

Location: 1500 E Woodrow Wilson Ave, Jackson, MS 39216

Issue Date: 10/06/23 | Checked: DGG | Drawn: MB

Project Number: 586-22-703

Building Number: R+E

Drawing Number: MV105

VA FORM 08-6231

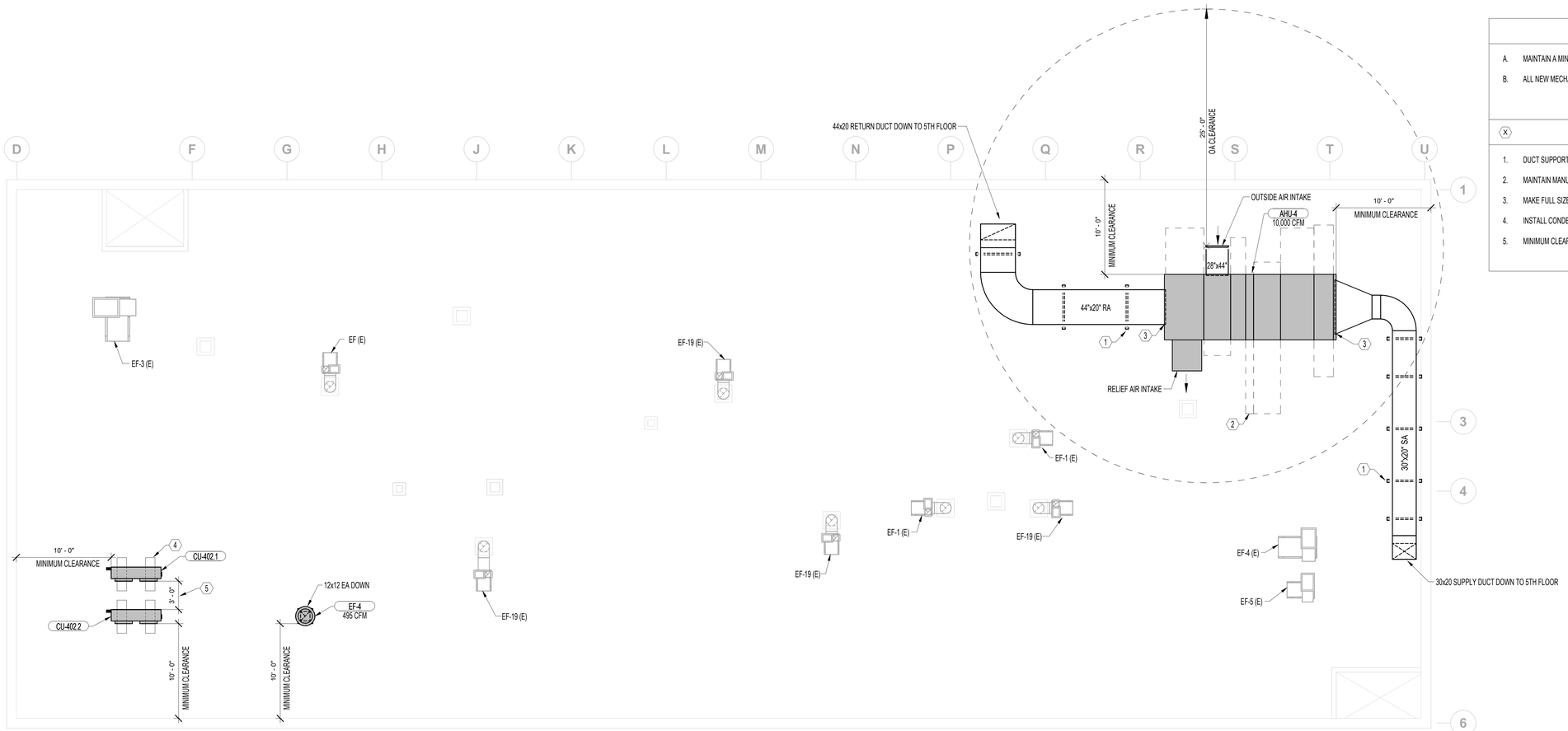

N

1 MECHANICAL - VENTILATION PLAN - ROOF

3/16" = 1'-0"

GENERAL NOTES

A. MAINTAIN A MINIMUM 25'-0" SEPARATION FROM EXHAUST OUTLETS AND ROOF VENTS TO AHU AIR INTAKES.

B. ALL NEW MECHANICAL EQUIPMENT MAINTAIN A MINIMUM 10'-0" SEPERATION FROM EDGE OF ROOF.

(X) MECHANICAL KEYNOTES

1. DUCT SUPPORTS (TYPICAL). REFER TO MECHANICAL DETAILS SHEETS FOR MORE INFORMATION.
2. MAINTAIN MANUFACTURER'S RECOMMENDED CLEARANCE REQUIREMENTS.
3. MAKE FULL SIZE DUCT CONNECTION TO AHU.
4. INSTALL CONDENSATE UNIT ON RAILS.
5. MINIMUM CLEARANCE BETWEEN UNITS, OR MANUFACTUERS RECOMMENDATION.

VA CONTRACT NO:36C77623C0052

100% CONSTRUCTION + BID DRAWING	10/06/2023
100% CONSTRUCTION + BID DRAWING	09/28/2023
95% CONSTRUCTION DOCUMENTS	09/01/2023
65% CONSTRUCTION DOCUMENTS	07/27/2023
35% CONSTRUCTION DOCUMENTS	06/26/2023
Revisions:	Date:

CONSULTANT

ARCHITECT/ENGINEER OF RECORD

BANCROFT ARCHITECTS + ENGINEERS
3300 Dundee Rd.
Northbrook, IL 60062
T: 847.952.9362
www. bancroft-ae.com

STAMP

LICENSED PROFESSIONAL ENGINEER
RAED HAMID
062.065548
OF ILLINOIS
10-06-2023

Office of Construction and Facilities Management

VA U.S. Department of Veterans Affairs

Drawing Title: MECHANICAL - VENTILATION PLAN - ROOF

Approved: Project Director

Phase: 100% CONSTRUCTION + BID DRAWINGS

FULLY SPRINKLERED

Project Title: G.V. (Sonny) Montgomery VAMC EHRM-TASS

Location: 1500 E Woodrow Wilson Ave, Jackson, MS 39216

Issue Date: 10/06/23 | Checked: DGG | Drawn: MB

Project Number: 586-22-703

Building Number: R+E

Drawing Number: MV106

VA FORM 08-6231

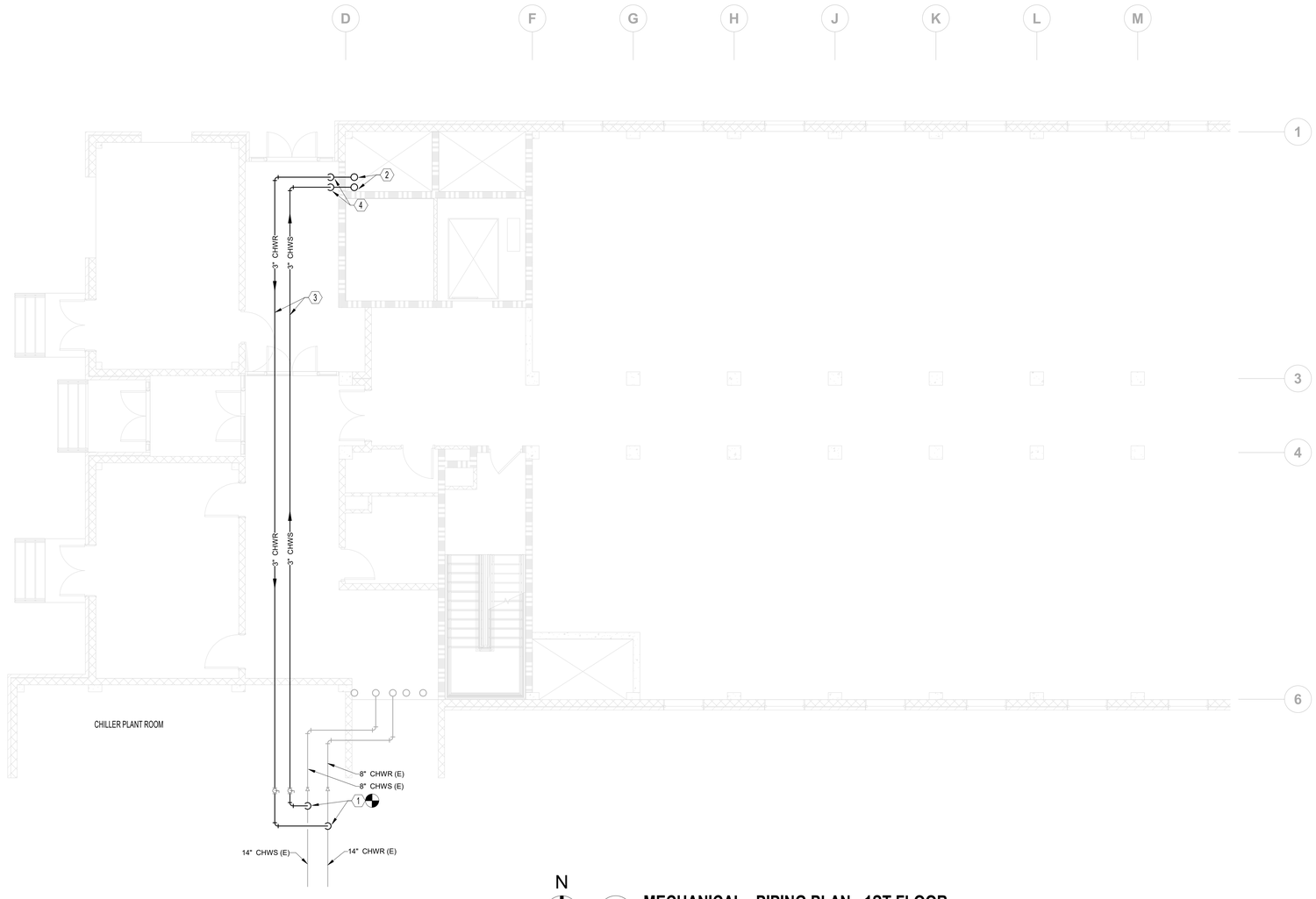

N

1 **MECHANICAL - PIPING PLAN - 1ST FLOOR**

3/16" = 1'-0"

GENERAL NOTES

A. FIRESTOP ALL PIPE PENETRATIONS OF FIRE RATED WALLS. REFER TO ARCHITECTURAL DRAWINGS FOR LOCATIONS.

(X) MECHANICAL KEYNOTES

1. CONNECT NEW 3" CHILLED WATER SUPPLY AND RETURN PIPES TO EXISTING 14" CHILLED WATER SUPPLY AND RETURN PIPES IN CHILLER PLANT ROOM.
2. 3" CHILLED WATER SUPPLY AND RETURN UP TO 4TH FLOOR.
3. ROUTE 3" CHILLED WATER SUPPLY AND RETURN AS HIGH AS POSSIBLE IN CORRIDOR.
4. DROP 3" CHILLED WATER SUPPLY AND RETURN TO ROUTE BELOW STRUCTURAL BEAM.

VA CONTRACT NO:36C77623C0052

Revisions:	Date:
100% CONSTRUCTION + BID DRAWING	10/06/2023
100% CONSTRUCTION + BID DRAWING	09/28/2023
95% CONSTRUCTION DOCUMENTS	09/01/2023

CONSULTANT

ARCHITECT/ENGINEER OF RECORD

BANCROFT ARCHITECTS + ENGINEERS
3300 Dundee Rd.
Northbrook, IL 60062
T: 847.952.9362
www.bancroft-ae.com

STAMP

LICENSED PROFESSIONAL ENGINEER
RAED HAMID
062.065548
OF ILLINOIS
10-06-2023

Office of Construction and Facilities Management

VA U.S. Department of Veterans Affairs

Drawing Title: MECHANICAL - PIPING PLAN - 1ST FLOOR

Approved: Project Director

Phase: 100% CONSTRUCTION + BID DRAWINGS

FULLY SPRINKLERED

Project Title: G.V. (Sonny) Montgomery VAMC EHRM-TASS

Location: 1500 E Woodrow Wilson Ave, Jackson, MS 39216

Issue Date: 10/06/23 | Checked: DGG | Drawn: MB

Project Number: 586-22-703

Building Number: R+E

Drawing Number: MP101

VA FORM 08-6231

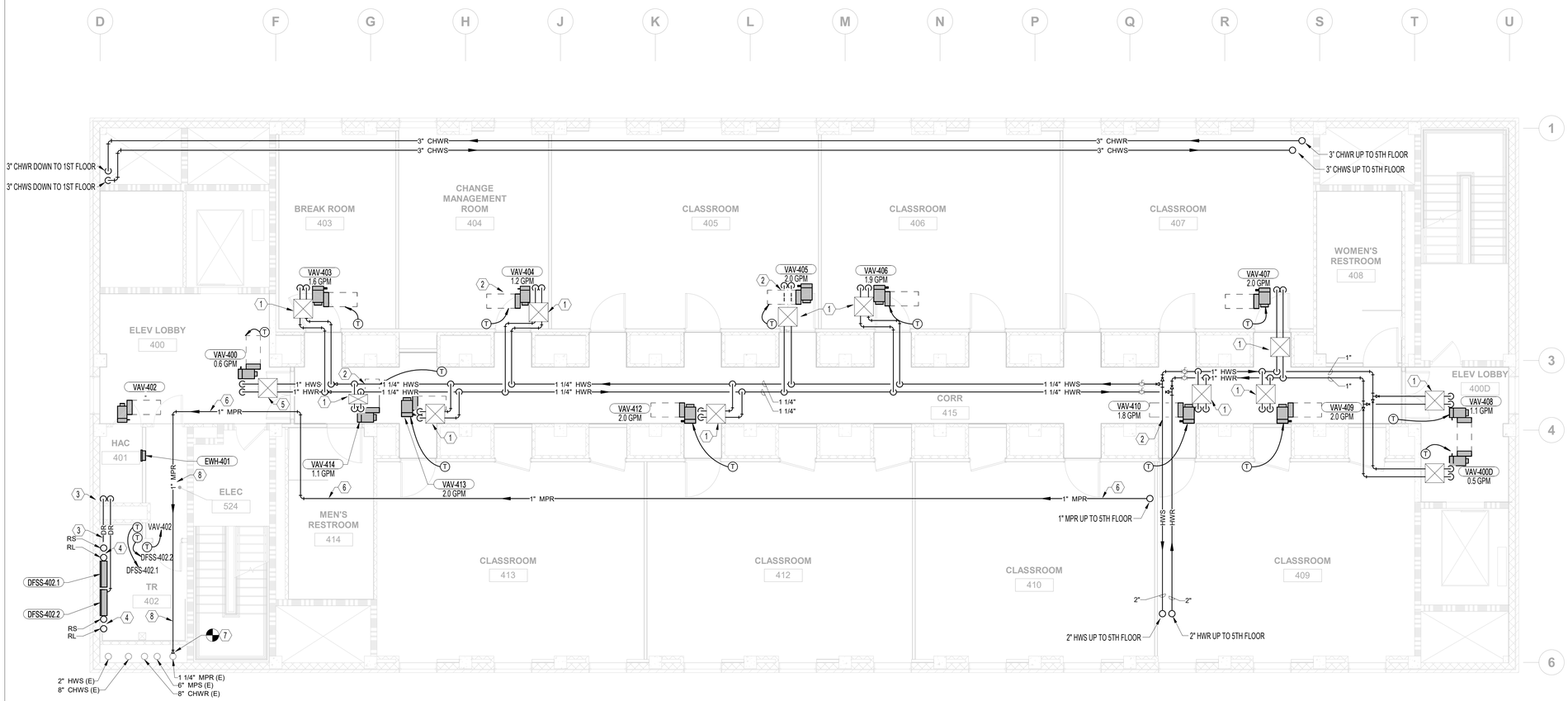

N

1 **MECHANICAL - PIPING PLAN - 4TH FLOOR**

3/16" = 1'-0"

GENERAL NOTES

A. FIRESTOP ALL PIPE PENETRATIONS OF FIRE RATED WALLS. REFER TO ARCHITECTURAL DRAWINGS FOR LOCATIONS.

B. ROUTE HYDRONIC PIPING AS HIGH AS POSSIBLE ABOVE DUCTWORK.

C. CEILING ACCESS SHALL BE PROVIDED SUCH THAT EQUIPMENT SHALL BE READILY SERVICEABLE, FOR ALL HVAC EQUIPMENT AND COMPONENTS LOCATED ABOVE THE CEILING THAT REQUIRE OPERATING, CLEANING, SERVICING, MAINTENANCE, AND CALIBRATION. SUCH EQUIPMENT INCLUDES, BUT IS NOT LIMITED TO, VAV BOXES, AIR VALVES, CONTROL VALVES, STRAINERS, BALANCING DAMPERS, ETC.

D. ALL BRANCH PIPING CONNECTING TO VAV BOXES AND RADIANT PANELS SHALL BE 3/4" UNLESS NOTED OTHERWISE.

E. ALL STRAINERS SHALL BE PROVIDED WITH HOSE-BIB CONNECTION.

F. ALL VAV TERMINAL UNITS SHALL BE TAGGED USING PERMANENT MARKING SYSTEM SUCH AS STENCIL OR ENGRAVED RIGID BLACK PLASTIC NAMEPLATES WITH WHITE LETTERS NOT LESS THAN 3/16" HIGH. THE LABELS SHALL BE PERMANENTLY AFFIXED TO THE UNITS AND SHALL BE VISIBLE FROM MULTI DIRECTIONS ON BOTH SIDES OF THE TERMINAL UNIT. PEEL AND STICK DEVICES SHALL BE PERMITTED.

(X) MECHANICAL KEYNOTES

1. VAV REHEAT COIL VALVE ASSEMBLY. INSTALL IN AN ACCESSIBLE LOCATION ABOVE CEILING. REFER TO VAV 2-WAY VALVE PIPING DETAIL FOR MORE INFORMATION.
2. INSTALL PIPING AT ELEVATION SO AS NOT TO CONFLICT WITH VAV BOX ACCESS REQUIREMENTS.
3. 3/4" CONDENSATE DRAIN PIPING TO BE ROUTED TIGHT TO EXTERIOR WALL TO MOP BASIN IN HAC-401. ROUTE PIPING AT 1/8" PITCH.
4. REFRIGERANT LIQUID/SUCTION PIPING UP SIZED PER MANUFACTURER'S RECOMMENDATIONS.
5. VAV REHEAT COIL VALVE ASSEMBLY. INSTALL IN AN ACCESSIBLE LOCATION ABOVE CEILING. REFER TO VAV 3-WAY VALVE PIPING DETAIL FOR MORE INFORMATION.
6. ROUTE 1" MEDIUM PRESSURE RETURN BACK TO MAIN RISER. PITCH PIPING IN DIRECTION OF FLOW.
7. CONNECT NEW 1" MEDIUM PRESSURE RETURN TO EXISTING 1-1/4" MEDIUM PRESSURE RETURN RISER.
8. INSTALL DRIP PAN BELOW MEDIUM PRESSURE RETURN PIPING IN ROOMS ELEC 524 AND TR 402.

VA CONTRACT NO:36C77623C0052

100% CONSTRUCTION + BID DRAWING	10/06/2023
100% CONSTRUCTION + BID DRAWING	09/28/2023
95% CONSTRUCTION DOCUMENTS	09/01/2023
65% CONSTRUCTION DOCUMENTS	07/27/2023
Revisions:	Date:

CONSULTANT

ARCHITECT/ENGINEER OF RECORD

BANCROFT ARCHITECTS + ENGINEERS
3300 Dundee Rd.
Northbrook, IL 60062
T: 847.952.9362
www.bancroft-ae.com

STAMP

LICENSED PROFESSIONAL ENGINEER RAED HAMID 062.065548 OF ILLINOIS
10-06-2023

Office of Construction and Facilities Management

VA U.S. Department of Veterans Affairs

Drawing Title: MECHANICAL - PIPING PLAN - 4TH FLOOR

Approved: Project Director

Phase: 100% CONSTRUCTION + BID DRAWINGS

FULLY SPRINKLERED

Project Title: G.V. (Sonny) Montgomery VAMC EHRM-TASS

Location: 1500 E Woodrow Wilson Ave, Jackson, MS 39216

Issue Date: 10/06/23 | Checked: DGG | Drawn: MB

Project Number: 586-22-703

Building Number: R+E

Drawing Number: MP104

VA FORM 08-6231

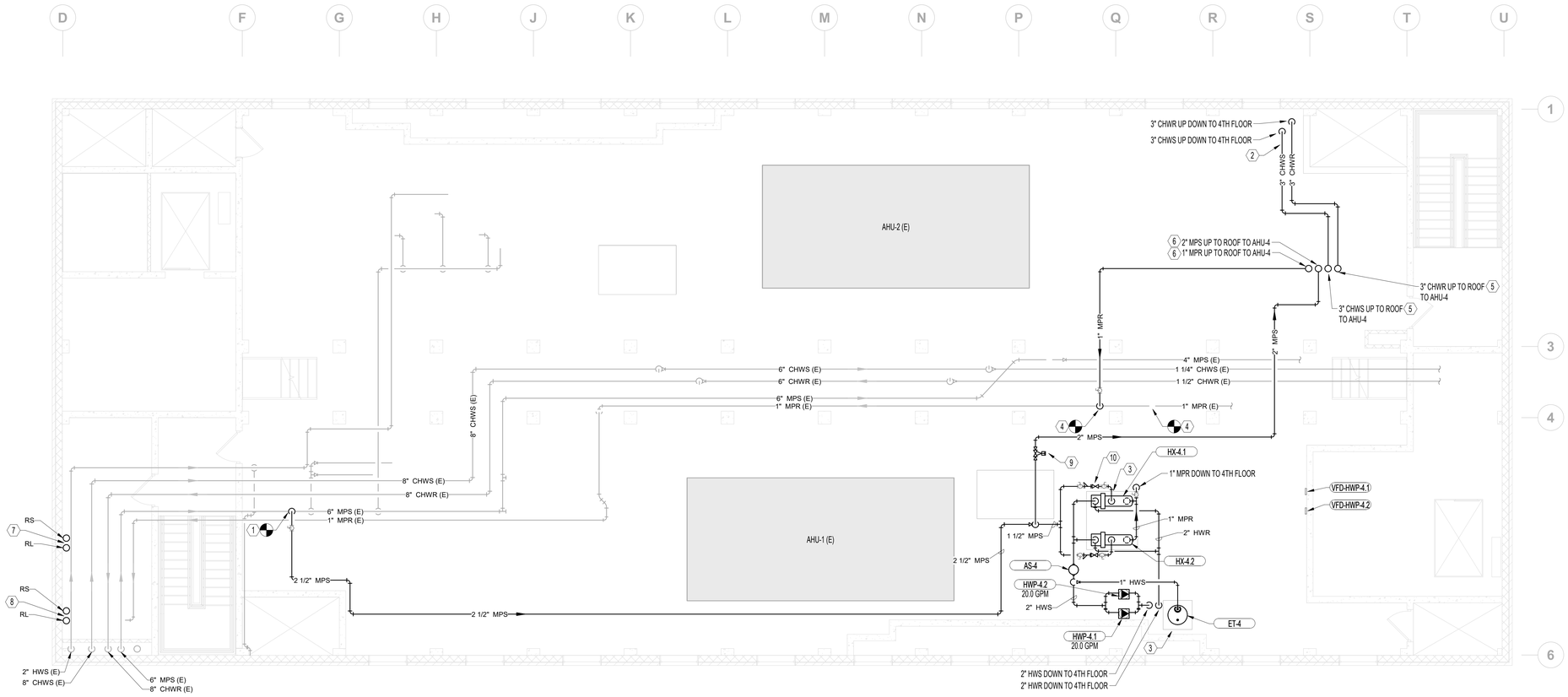

1 MECHANICAL - PIPING PLAN - 5TH FLOOR

3/16" = 1'-0"

GENERAL NOTES

A. FIRESTOP ALL PIPE PENETRATIONS OF FIRE RATED WALLS. REFER TO ARCHITECTURAL DRAWINGS FOR LOCATIONS.

B. ROUTE HYDRONIC PIPING AS HIGH AS POSSIBLE ABOVE DUCTWORK.

C. EQUIPMENT SHALL BE READILY SERVICEABLE, FOR ALL HVAC EQUIPMENT AND COMPONENTS THAT REQUIRE OPERATING LOCATED IN ACCECSSIBLE LOCATION, CLEANING, SERVICING, MAINTENANCE, AND CALIBRATION. SUCH EQUIPMENT INCLUDES, BUT IS NOT LIMITED TO, AIR VALVES, CONTROL VALVES, STRAINERS, BALANCING DAMPERS, ETC.

D. ALL STRAINERS SHALL BE PROVIDED WITH HOSE-BIB CONNECTION.

E. ONCE 4TH FLOOR HAS BEEN REMOVED FROM AHU 1&2, BALANCE ALL ZONES TO PRECONSTRUCTION CFM AND STATIC PRESSURE IN EACH SUPPLY AND RETURN DUCT MAIN PRIOR TO BRANCH TAKEOFFS AT EACH FLOOR. ADJUST THE WATER AND STEAM FLOW RATES IN EACH PIPING TO AHU 1&2.

F. INSTALL DRIP LEGS AND TRAPS. REFER TO DETAILS FOR MORE INFORMATION.

G. ROUTE TO THE NEW WASTE LINES TO NEAR BY EXISTING FLOOR DRAIN.

H. CONTRACTOR TO PROVIDE ALL STEEL VALVES TO SERVE THE MEDIUM PRESSURE SYSTEM. THIS SHALL INCLUDE BUT IS NOT LIMITED TO CONTROL VALVES, STEAM TRAPS, CHECK VALVES, AND ETC. REFER TO VA SPECIFICATION FOR MORE INFORMATION.

I. CONTRACTOR TO SIZE ALL STEAM TRAPS TO MEET CONSTRUCTION DRAWINGS. SUBMIT THE STEAM TRAP FOR ENGINEER REVIEW. REFER TO VA SPECIFICATION FOR MORE INFORMATION.

(X) MECHANICAL KEYNOTES

1. CONNECT NEW 2-1/2" MEDIUM PRESSURE STEAM SUPPLY PIPING TO EXISTING 6" MEDIUM PRESSURE STEAM MAIN PIPING. PROVIDE SHUT-OFF VALVE FOR NEW BRANCH PIPING NEAR MAIN. PITCH PIPING IN DIRECTION OF FLOW.
2. PROVIDE VALVE INSIDE MECHANICAL ROOM FOR BOTH CHILLED WATER SUPPLY AND RETURN. REFER TO DETAILS FOR MORE INFORMATION.
3. 4" THICK CONCRETE PAD.
4. CONNECT NEW 1" MEDIUM PRESSURE STEAM RETURN PIPING TO EXISTING 1" MEDIUM PRESSURE STEAM RETURN PIPING. PROVIDE SHUT-OFF VALVE FOR NEW BRANCH PIPING NEAR MAIN. PITCH PIPING IN DIRECTION OF FLOW.
5. 3" CHWS&R CONTINUED ON SHEET 'MP106'.
6. 1" MPS&R CONTINUED ON SHEET 'MP106'. PITCH PIPING IN DIRECTION OF FLOW.
7. REFRIGERANT LIQUID/SUCTION PIPING DOWN TO 'DFSS-402.1' ON 4TH FLOOR AND UP TO 'CU-402.1' ON ROOF.
8. REFRIGERANT LIQUID/SUCTION PIPING DOWN TO 'DFSS-402.2' ON 4TH FLOOR AND UP TO 'CU-402.2' ON ROOF.
9. PROVIDE VALVE INSIDE MECHANICAL ROOM FOR BOTH MEDIUM PRESSURE SUPPLY AND RETURN. REFER TO DETAILS FOR MORE INFORMATION.
10. COLD WATER SUPPLY CONNECTION. REFER TO PLUMBING PLANS FOR MORE INFORMATION.

VA CONTRACT NO:36C77623C0052

100% CONSTRUCTION + BID DRAWING	10/06/2023
100% CONSTRUCTION + BID DRAWING	09/28/2023
95% CONSTRUCTION DOCUMENTS	09/01/2023
65% CONSTRUCTION DOCUMENTS	07/27/2023
Revisions:	Date:

CONSULTANT

ARCHITECT/ENGINEER OF RECORD

BANCROFT ARCHITECTS + ENGINEERS
3300 Dundee Rd.
Northbrook, IL 60062
T: 847.952.9362
www. bancroft-ae.com

STAMP

LICENSED PROFESSIONAL ENGINEER RAED HAMID 062.065548 OF ILLINOIS
10-06-2023

Office of Construction and Facilities Management

VA U.S. Department of Veterans Affairs

Drawing Title: MECHANICAL - PIPING PLAN - 5TH FLOOR

Approved: Project Director

Phase: 100% CONSTRUCTION + BID DRAWINGS

FULLY SPRINKLERED

Project Title: G.V. (Sonny) Montgomery VAMC EHRM-TASS

Location: 1500 E Woodrow Wilson Ave, Jackson, MS 39216

Issue Date: 10/06/23 | Checked: DGG | Drawn: MB

Project Number: 586-22-703

Building Number: R+E

Drawing Number: MP105

VA FORM 08-6231

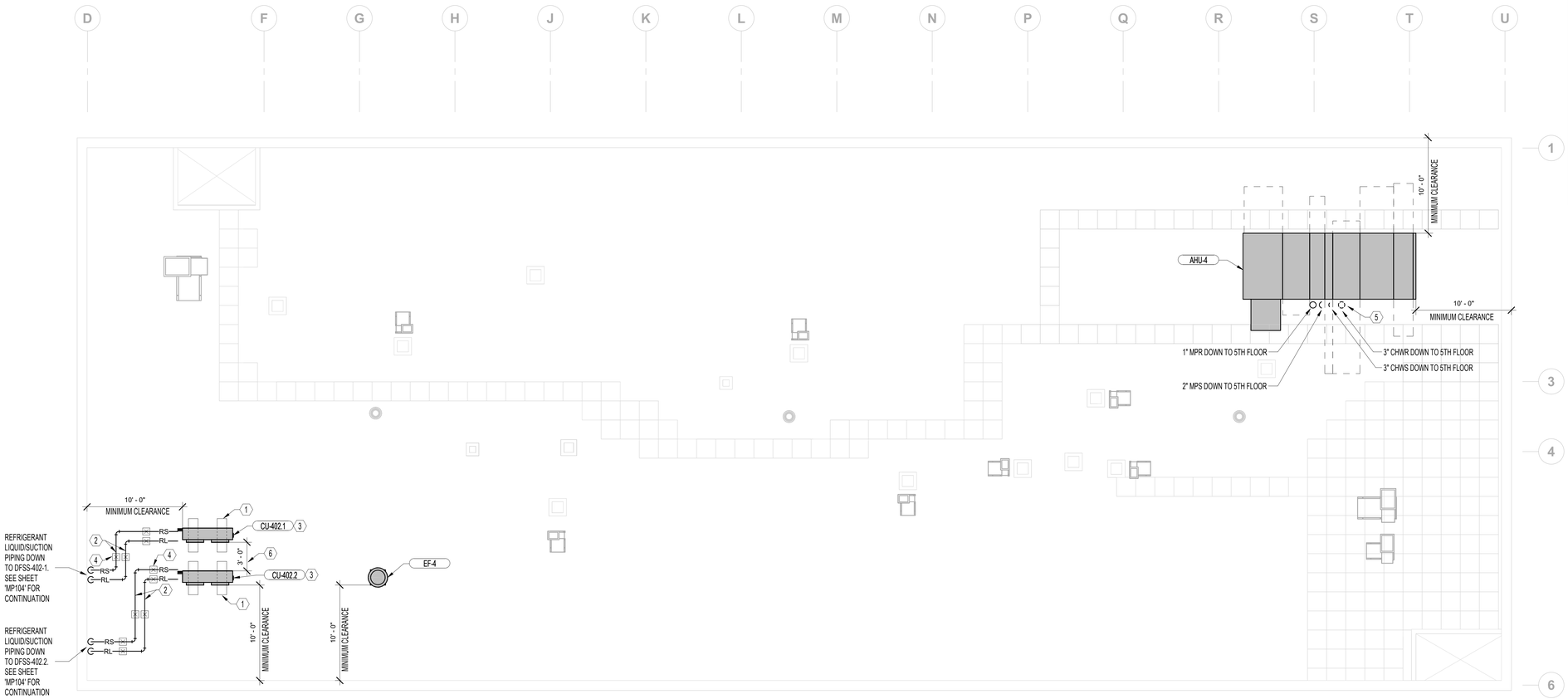

N

1 **MECHANICAL - PIPING PLAN - ROOF**

3/16" = 1'-0"

GENERAL NOTES

A. ALL NEW MECHANICAL EQUIPMENT MAINTAIN A MINIMUM 10'-0" SEPERATION FROM EDGE OF ROOF.

(X) MECHANICAL KEYNOTES

1. INSTALL CONDENSATE UNIT ON RAILS.
2. REFRIGERANT LIQUID/SUCTION PIPING SIZED ACCORDING TO MANUFACTURER'S INSTRUCTIONS.
3. COORDINATE LOCATION OF CONDENSING UNIT WITH EXISTING ROOF EQUIPMENT.
4. PILLOW BLOCKS PIPE SUPPORTS. SEE DETAILS SHEETS FOR MORE INFORMATION.
5. COIL VALVE ASSEMBLY. LOCATE ALL COIL VALVING AND CONDENSATE TRAPS WITHIN THE INSULATED PIPE PORTAL.
6. MINIMUM CLEARANCE BETWEEN UNITS, OR MANUFACTUERS RECOMMENDATION.

VA CONTRACT NO:36C77623C0052

100% CONSTRUCTION + BID DRAWING	10/06/2023
100% CONSTRUCTION + BID DRAWING	09/28/2023
95% CONSTRUCTION DOCUMENTS	09/01/2023
65% CONSTRUCTION DOCUMENTS	07/27/2023
Revisions:	Date:

CONSULTANT

ARCHITECT/ENGINEER OF RECORD

BANCROFT ARCHITECTS + ENGINEERS
3300 Dundee Rd.
Northbrook, IL 60062
T: 847.952.9362
www. bancroft-ae.com

STAMP

LICENSED PROFESSIONAL ENGINEER
RAED HAMID
062.065548
OF ILLINOIS
10-06-2023

Office of Construction and Facilities Management

VA U.S. Department of Veterans Affairs

Drawing Title: MECHANICAL - PIPING PLAN - ROOF

Approved: Project Director

Phase: 100% CONSTRUCTION + BID DRAWINGS

FULLY SPRINKLERED

Project Title: G.V. (Sonny) Montgomery VAMC EHRM-TASS

Location: 1500 E Woodrow Wilson Ave, Jackson, MS 39216

Issue Date: 10/06/23 | Checked: DGG | Drawn: MB

Project Number: 586-22-703

Building Number: R+E

Drawing Number: MP106

VA FORM 08-6231

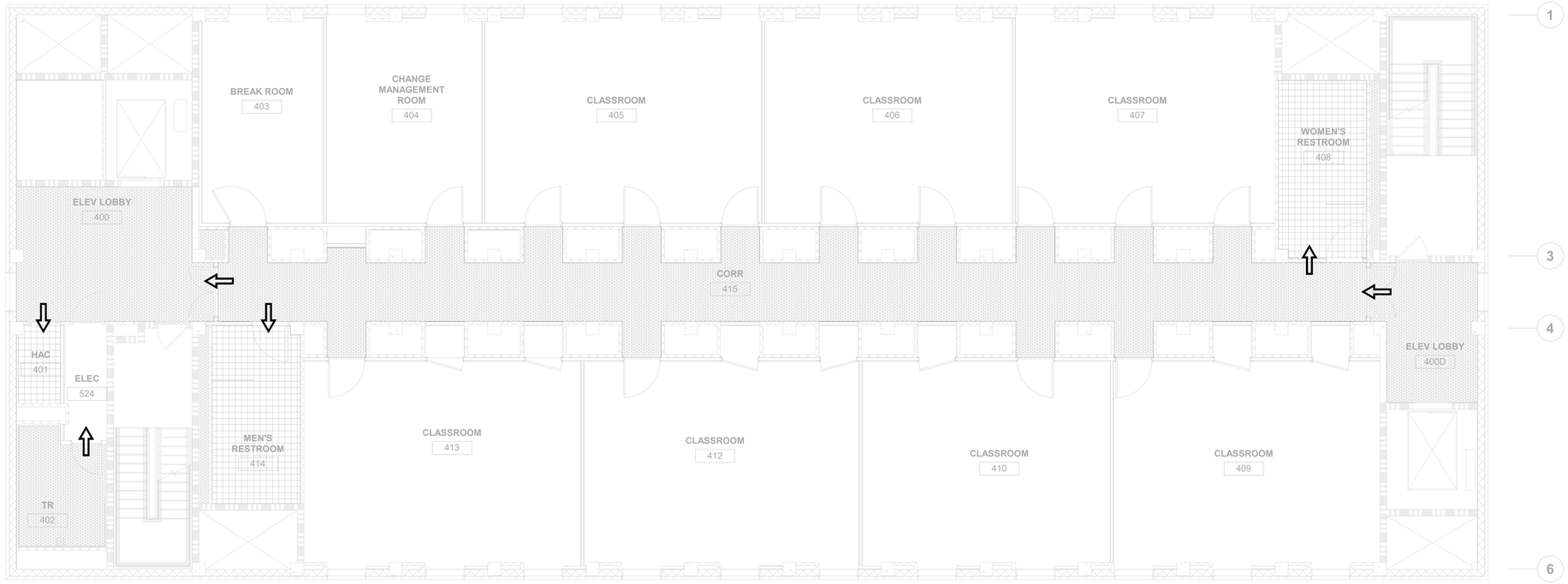

DOUBLE NEGATIVE

NEUTRAL

POSITIVE

ARROW POINTS IN THE DIRECTION OF AIRFLOW

NORTH
WEST EAST
SOUTH

N

1 **MECHANICAL - AIRFLOW DIAGRAM - 4TH FLOOR**

3/16" = 1'-0"

VA CONTRACT NO:36C77623C0052

100% CONSTRUCTION + BID DRAWING	10/06/2023
100% CONSTRUCTION + BID DRAWING	09/28/2023
95% CONSTRUCTION DOCUMENTS	09/01/2023
65% CONSTRUCTION DOCUMENTS	07/27/2023
Revisions:	Date:

CONSULTANT

ARCHITECT/ENGINEER OF RECORD

BANCROFT ARCHITECTS + ENGINEERS
3300 Dundee Rd.
Northbrook, IL 60062
T: 847.952.9362
www.bancroft-ae.com

STAMP

LICENSED PROFESSIONAL ENGINEER
RAED HAMID
062.065548
OF ILLINOIS
Raed Hamid
10-06-2023

Office of Construction and Facilities Management

VA U.S. Department of Veterans Affairs

Drawing Title: MECHANICAL - AIRFLOW DIAGRAM - 4TH FLOOR

Approved: Project Director

Phase: 100% CONSTRUCTION + BID DRAWINGS

FULLY SPRINKLERED

Project Title: G.V. (Sonny) Montgomery VAMC EHRM-TASS

Location: 1500 E Woodrow Wilson Ave, Jackson, MS 39216

Issue Date: 10/06/23

Checked: DGG

Drawn: MB

Project Number: 586-22-703

Building Number: R+E

Drawing Number: MC500

VA FORM 08-6231

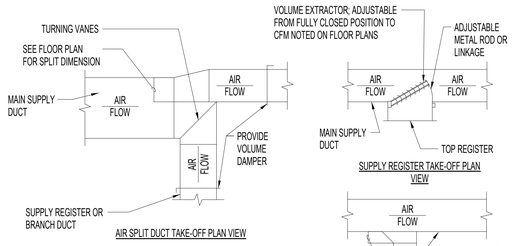

DESIGNER'S NOTES:
1. THE SUPPLY REGISTER TAKE-OFF MAY BE USED FOR UP UP TO 25% OF THE MAIN DUCT CFM. THE BRANCH DUCT TAKE-OFF MAY BE USED FOR UP TO 15% OF THE MAIN DUCT CFM ANYTIME AND UP TO 40% WHEN THE MAIN DUCT VELOCITY IS 1000 FPM [5.1 M/S] OR LESS. THE AIR SPLIT DUCT TAKE-OFF SHALL BE USED IN ALL OTHER CASES AND MAY BE USED AT ANYTIME.
2. SHOW ALL VOLUME DAMPERS ON FLOOR PLANS.

4 SUPPLY DUCTWORK TAKE-OFFS
NTS

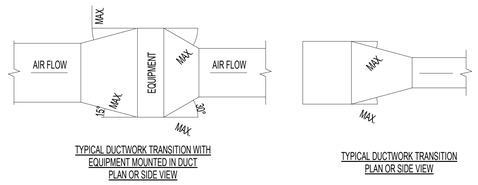

NOTES:
1. UNLESS OTHERWISE INDICATED ON PLANS, MAXIMUM ANGLES SHOWN SHALL APPLY.

3 DUCTWORK TRANSITIONS (WITH EQUIPMENT MOUNTED IN DUCT)
NTS

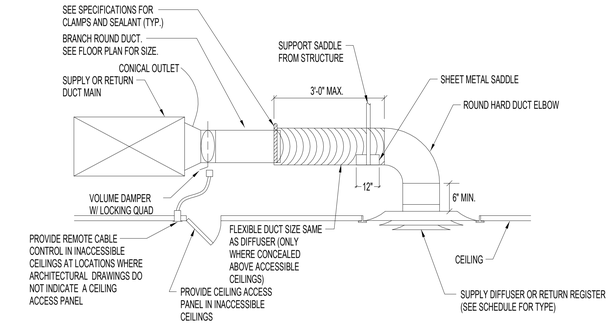

2 DIFFUSER INSTALLATION
NTS

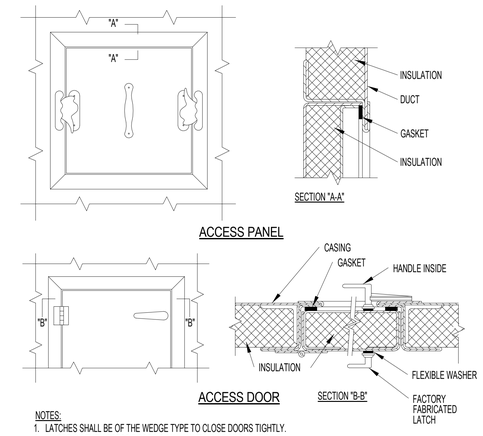

NOTES:
1. LATCHES SHALL BE OF THE WEDGE TYPE TO CLOSE DOORS TIGHTLY.
2. HINGES ON THE ACCESS DOORS SHALL HAVE NON-CORROSIVE PINS.
3. SEE SMACNA 2009, FIGURE 9-15

1 ACCESS PANEL AND DOOR DETAIL
NTS

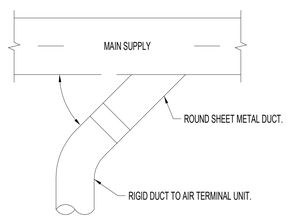

8 SUPPLY DUCT TAKEOFF - AIR TERMINAL UNIT
NTS

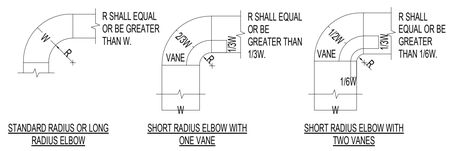

NOTES:
1. THE INTERIOR SURFACE OF ALL RADIUS ELBOWS SHALL BE MADE ROUND.
2. ALL STANDARD RADIUS ELBOWS CAN BE SUBSTITUTED WITH SHORT RADIUS ELBOWS. ALL SHORT RADIUS ELBOWS SHALL HAVE VANES. VANES SHALL BE CONSTRUCTED, SUPPORTED AND FASTENED AS RECOMMENDED BY SMACNA.

7 DUCTWORK RADIUS ELBOWS
NTS

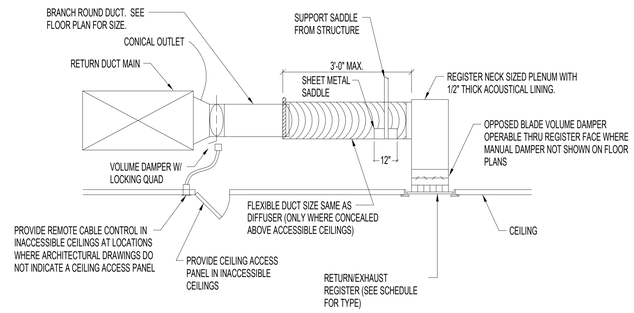

6 GRILLE INSTALLATION
NTS

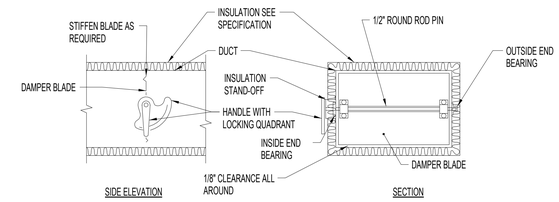

NOTES:
1. DELETE INSULATION STAND-OFF ON DUCTWORK WITHOUT EXTERIOR INSULATION.
2. DETAIL SHOWS SINGLE BLADE DAMPER. DAMPER INSTALLATION SHALL BE SIMILAR FOR MULTI-BLADE DAMPERS & ROUND DAMPERS.

5 VOLUME DAMPER
NTS

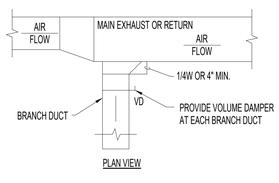

11 EXHAUST OR RETURN BRANCH DUCTWORK
NTS

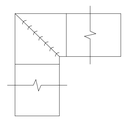

NOTES:
1. ALL VANE ELBOWS SHALL BE CONSTRUCTED AND INSTALLED AS DETAILED BY SMACNA.
2. WHEN W1 DOES NOT EQUAL W2, VANE SHALL BE SINGLE THICKNESS VANE TYPE REGARDLESS OF W DIMENSION.
3. ALL SINGLE THICKNESS VANES SHALL HAVE A 2" RADIUS, 1 1/2" MAXIMUM SPACE BETWEEN VANES AND A 3/4" TRAILING EDGE.
4. WHEN W EQUALS W2 AND W1 IS GREATER THAN 20" VANES SHALL BE DOUBLE VANE TYPE.

10 DUCTWORK SQUARE VANE ELBOWS
NTS

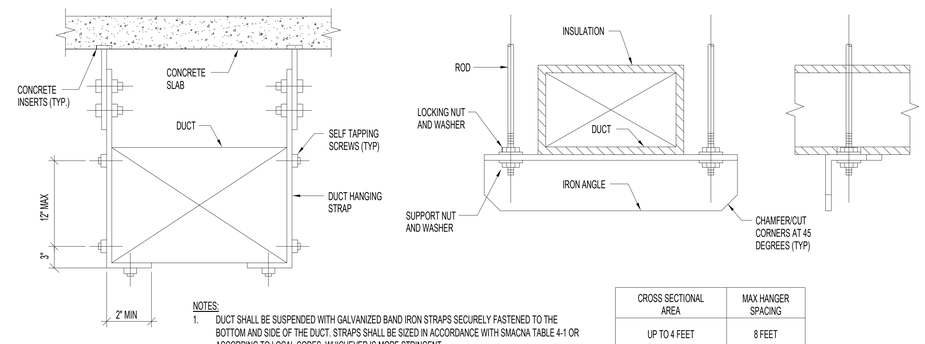

NOTES:
1. DUCT SHALL BE SUSPENDED WITH GALVANIZED BAND IRON STRAPS SECURELY FASTENED TO THE BOTTOM AND SIDE OF THE DUCT. STRAPS SHALL BE SIZED IN ACCORDANCE WITH SMACNA TABLE 4-1 OR ACCORDING TO LOCAL CODES, WHICHEVER IS MORE STRINGENT.
2. DUCTS WIDER THAN 60 INCHES SHALL BE SUPPORTED BY TRAPEZE ANGLES IN ACCORDANCE WITH SMACNA TABLE 4-1.

CROSS SECTIONAL AREA	MAX HANGER SPACING
UP TO 4 FEET	8 FEET
OVER 4 FEET NOT TO EXCEED 10 FEET	6 FEET
OVER 10 FEET	4 FEET

9 RECTANGULAR DUCT INSTALLATION
NTS

VA CONTRACT NO:36C77623C0052

100% CONSTRUCTION + BID DRAWING	10/06/2023
100% CONSTRUCTION + BID DRAWING	09/28/2023
95% CONSTRUCTION DOCUMENTS	09/01/2023
65% CONSTRUCTION DOCUMENTS	07/27/2023
Revisions:	Date:

CONSULTANT

ARCHITECT/ENGINEER OF RECORD

BANCROFT ARCHITECTS + ENGINEERS
3300 Dundee Rd.
Northbrook, IL 60062
T: 847.952.9362
www.bancroft-ae.com

STAMP
LICENSED PROFESSIONAL ENGINEER RAED HAMID 062.065548 OF ILLINOIS
10-06-2023

Office of Construction and Facilities Management

VA U.S. Department of Veterans Affairs

Drawing Title: MECHANICAL DETAILS

Approved: Project Director

Phase: 100% CONSTRUCTION + BID DRAWINGS

FULLY SPRINKLERED

Project Title: G.V. (Sonny) Montgomery VAMC EHRM-TASS

Location: 1500 E Woodrow Wilson Ave, Jackson, MS 39216

Issue Date: 10/06/23 | Checked: DGG | Drawn: MB

Project Number: 586-22-703

Building Number: R+E

Drawing Number: M-501

VA FORM 08-6231

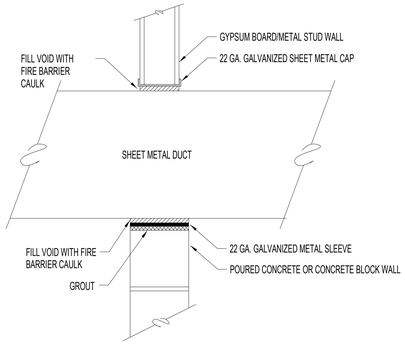

4 DUCT SLEEVE THRU INTERIOR WALL
NTS

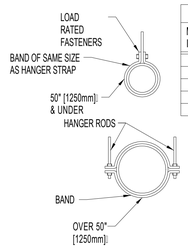

HANGER STRAPS OR RODS			
MAX. DUCT ▯ IN. [mm]	QUANTITY/SIZE IN. [mm]	MAX. LOAD LBS. [kg]	MAX. SPACING IN. [mm]
26 [650]	ONE 1 [25] x 22 GA STRAP	260 [119]	144 [3600]
36 [900]	ONE 1 [25] x 18 GA STRAP	420 [190]	144 [3600]
50 [1250]	ONE 1 [25] x 16 GA STRAP	700 [317]	144 [3600]
60 [1500]	TWO 3/8 [10]: RODS	1320 [598]	144 [3600]
84 [2100]	TWO 1/2 [13]: RODS	2500 [1133]	144 [3600]

NOTES:
1. TABULATED DATA FROM SMACNA ALLOWS FOR DUCT REINFORCING AND INSULATION, BUT NO EXTERNAL LOAD.

3 ROUND DUCT HANGERS
NTS

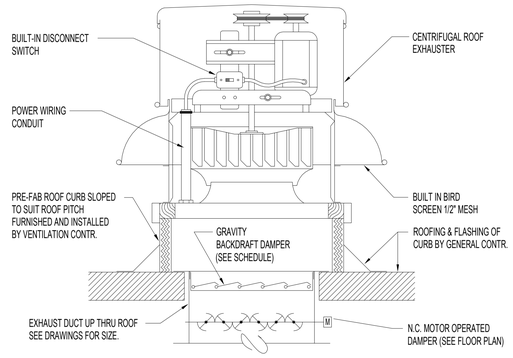

2 CENTRIFUGAL ROOF EXHAUSTER
NTS

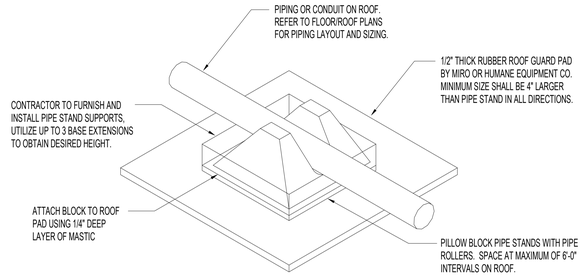

1 PIPING-CONDUIT (UP TO 3" DIA.) ROOF SUPPORT
NTS

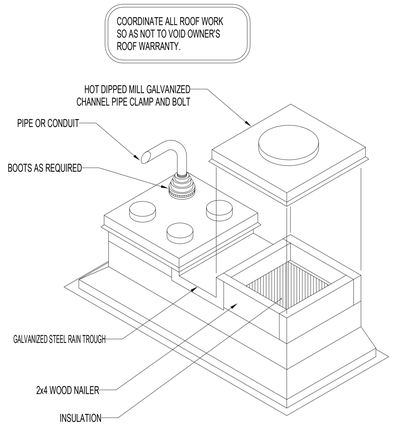

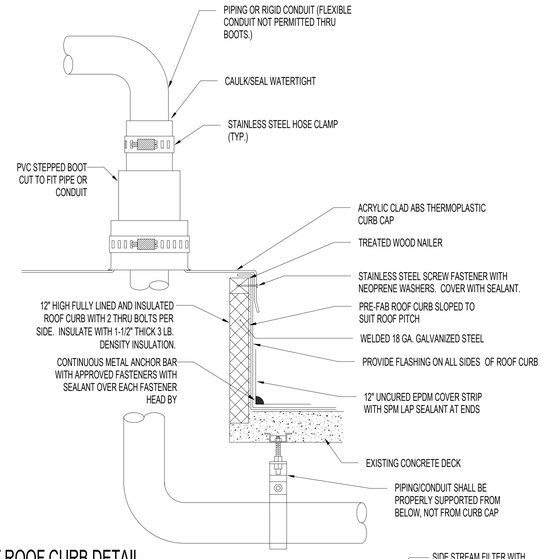

7 PIPING OR CONDUIT ROOF CURB DETAIL
NTS

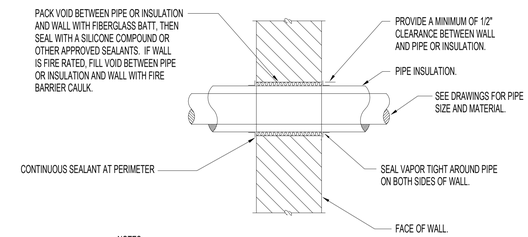

NOTES:
1. I.D. OF WALL OPENING TO BE A MIN. OF 1/2" LARGER THAN O.D. OF PIPE OR INSULATION PASSING THROUGH WALL.
2. CONTRACTOR SHALL BE RESPONSIBLE FOR THE COORDINATION OF THEIR WALL OPENINGS WITH OTHER TRADES AND/OR CONTRACTORS.
3. PIPE PENETRATIONS OF SMOKE OR FIRE WALLS SHALL BE IN COMPLIANCE WITH NFPA-90A.

6 PIPE PENETRATION OF INTERIOR WALL DETAIL
NTS

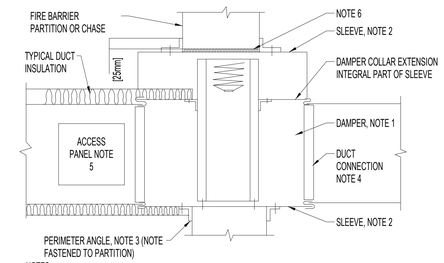

NOTES:
1. A VERTICAL DAMPER IS SHOWN. HORIZONTAL DAMPER INSTALLATION, IS SIMILAR. FOLLOW DAMPER MANUFACTURER'S INSTRUCTIONS, INCLUDING FASTENER OPTIONS AND GAGES FOR SLEEVE AND PERIMETER ANGLES. FIRE DAMPERS MUST BE INSTALLED IN THE PARTITION OR FLOOR AND NOT OUTSIDE THE PENETRATION.
2. GALVANIZED SLEEVE: GAGE NOT LESS THAN CONNECTING DUCT. FASTEN SLEEVE TO DAMPER FRAME AND TO PERIMETER ANGLES.
3. PERIMETER ANGELS: GALVANIZED STEEL, NOT LESS THAN 1 1/2"x1 1/2" [40x40mm], 14 GAGE, TO PROVIDE 1" MINIMUM OVERLAP OF OPENING ON ALL 4 SIDES.
4. BREAKAWAY DUCT CONNECTION: CONTRACTOR'S OPTION OF TYPES SHOWN IN SMACNA.
5. ACCESS PANELS: SIZE AND LOCATION TO PERMIT SERVICING THE FUSIBLE LINK OR LINKS.
6. PROVIDE 1/4" TO 1/2" CLEARANCE ON HEIGHT AND WIDTH. ALL DUCT WORK RISERS WHICH ARE RUN EXPOSED, SUCH AS THRU ATTIC FLOORS AND MECHANICAL ROOM FLOORS, SHALL BE PROVIDED WITH 3" HIGH CONCRETE CURB AROUND OPENING FOR DUCT.

5 SECTION THRU FIRE DAMPER INSTALLATION
NTS

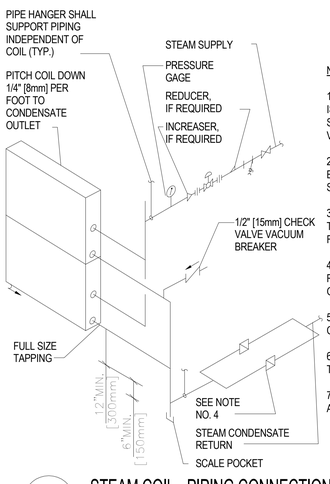

NOTE:

1. WHEN COIL IS INCLUDED IN CASING MOUNTED ON VIBRATION ISOLATOR UNITS, THE RUNOUT PIPING FOR CONNECTIONS TO COIL SHALL BE INSTALLED WITH SWING JOINTS TO ALLOW FOR THE VIBRATION.
2. PIPING SHALL BE INSTALLED IN SUCH MANNER THAT IT WILL NOT BLOCK THE SWING OR USE OF ACCESS DOORS OR PANELS; NEITHER SHALL IT BLOCK THE SERVICING OF FILTERS, VALVES, OR EQUIPMENT.
3. TRAP EACH COIL SEPARATELY WHEN INSTALLED IN A BANK OF TWO OR MORE HIGH. ALSO PROVIDE SEPARATE VACUUM BREAKER FOR EACH COIL.
4. TWO TRAP ASSEMBLIES IN PARALLEL ARE SHOWN. TWO TRAPS REQUIRED WHEN CONDENSATE LOAD IS 5,000 LBS/HR [2400 KG/HR] OR GREATER.
5. SUPPLY & RETURN PIPES ARE SHOWN FROM SAME END. REHEAT COIL MAY HAVE SUPPLY & RETURN PIPES FROM OPPOSITE ENDS.
6. ALL VALVES TO BE INSIDE MECHANICAL AND NOT EXPOSED TO THE OUTSIDE
7. ALL VALVES TO BE INSTALLED IN MECHANICAL ROOM IN AN ACCESSIBLE LOCATION FOR MAINTANCE.

11 STEAM COIL - PIPING CONNECTIONS
NTS

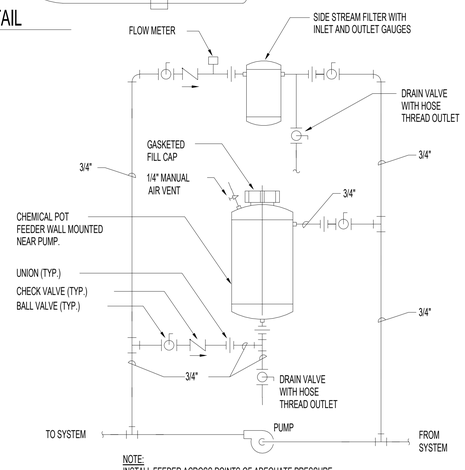

NOTE:
INSTALL FEEDER ACROSS POINTS OF ADEQUATE PRESSURE DIFFERENTIAL TO OBTAIN FLOW THRU FEEDER.

10 SIDE STREAM FILTER AND BY-PASS CHEMICAL FEEDER DETAIL
NTS

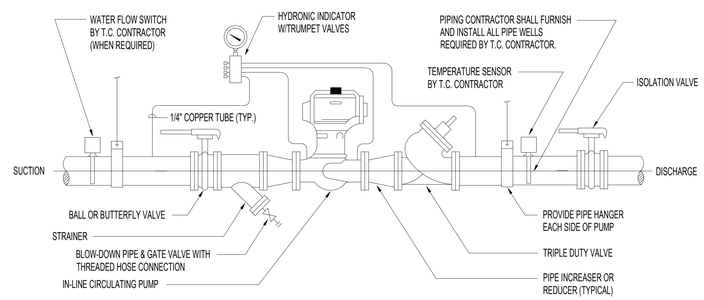

NOTES:
1. PIPING CONTRACTOR SHALL FURNISH/INSTALL WELL FOR TEMPERATURE SENSOR AND TAP FOR SWITCH AS SHOWN FOR FUTURE USE EVEN IF SENSOR OR FLOW SWITCH ARE NOT PROVIDED UNDER THIS PROJECT.
2. FOR PUMPS 1/2 HP OR SMALLER, CONTRACTOR MAY PROVIDE INDIVIDUAL PRESSURE/TEMPERATURE PLUGS IN LIEU OF HYDRONIC INDICATOR AND TUBING SHOWN.

9 IN-LINE PUMP DETAIL
NTS

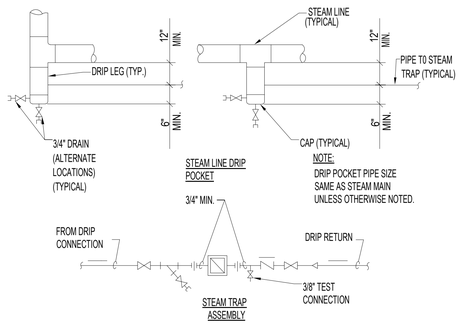

8 STEAM LINE DRIP POCKET STEAM TRAP ASSEMBLY
NTS

VA CONTRACT NO:36C77623C0052

100% CONSTRUCTION + BID DRAWING	10/06/2023
100% CONSTRUCTION + BID DRAWING	09/28/2023
95% CONSTRUCTION DOCUMENTS	09/01/2023
65% CONSTRUCTION DOCUMENTS	07/27/2023
Revisions:	Date:

CONSULTANT

ARCHITECT/ENGINEER OF RECORD
BANCROFT ARCHITECTS + ENGINEERS
3300 Dundee Rd.
Northbrook, IL 60062
T: 847.952.9362
www.bancroft-ae.com

STAMP
LICENSED PROFESSIONAL ENGINEER RAED HAMID 062.065548 OF ILLINOIS
10-06-2023

Office of Construction and Facilities Management
VA U.S. Department of Veterans Affairs

Drawing Title: MECHANICAL DETAILS
Approved: Project Director

Phase: 100% CONSTRUCTION + BID DRAWINGS
FULLY SPRINKLERED

Project Title: G.V. (Sonny) Montgomery VAMC EHRM-TASS
Location: 1500 E Woodrow Wilson Ave, Jackson, MS 39216
Issue Date: 10/06/23 | Checked: DGG | Drawn: MB

Project Number: 586-22-703
Building Number: R+E
Drawing Number: M-502

VA FORM 08-6231

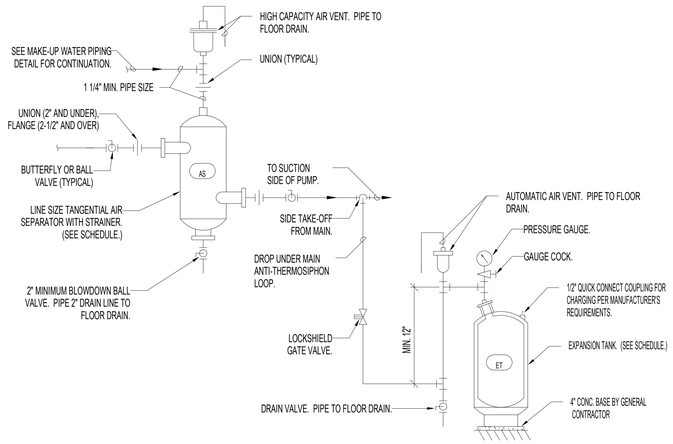

4 PRESSURIZED HYDRONIC AIR CONTROL
NTS

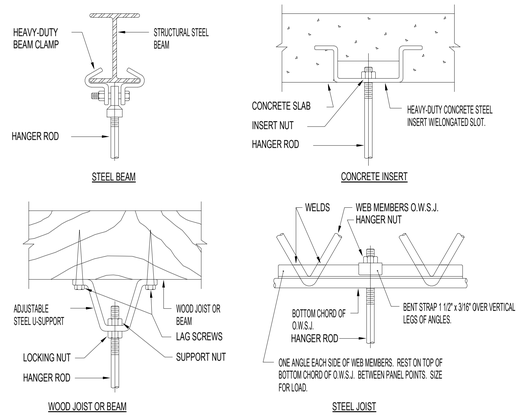

PIPE HANGERS AND SUPPORTS

SUPPORT HORIZONTAL STEEL AND COPPER PIPING AS FOLLOWS:

NOMINAL PIPE SIZE	DISTANCE BETWEEN SUPPORTS	HANGER ROD DIAMETERS
1/2"	6'	3/8"
3/4 TO 1-1/2"	6'	1/2"
2" TO 2-1/2"	10'	1/2"
3" AND 4"	12'	5/8"
6" TO 12"	14'	7/8"
14" TO 18"	20'	1"

PLACE HANGER WITHIN 1 FOOT OF EACH HORIZ. ELBOW. SUPPORT HORIZ. SOIL WASTE AND STORM PIPE NEAR EACH HUB, WITH 5 FEET MAXIMUM SPACING BETWEEN HANGERS. VERTICAL PIPING:

1. SUPPORT VERTICAL WATER PIPING AT EVERY FLOOR.
2. SUPPORT VERTICAL SOIL PIPE AT EACH FLOOR AT HUB.

WHERE SEVERAL PIPES CAN BE INSTALLED IN PARALLEL AND AT SAME ELEVATION PROVIDE MULTIPLE OR TRAPEZE HANGERS. WHERE PRACTICAL, SUPPORT RISER PIPING INDEPENDENTLY OF CONNECTED HORIZ. PIPING.

3 PIPE HANGER
NTS

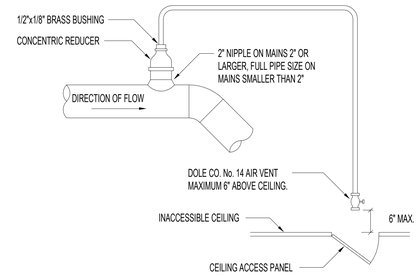

AIR VENT AT HIGH POINTS OF MAINS
NO SCALE

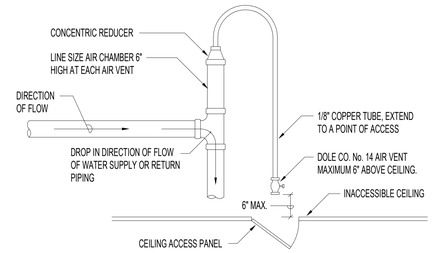

2 MANUAL AIR VENT-AT HIGH POINTS OF MAIN
NTS

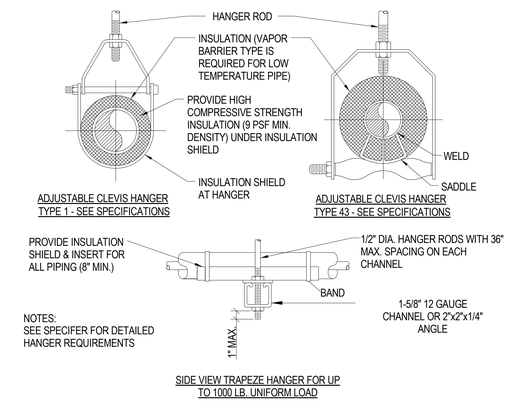

MAXIMUM PIPE/TUBING SUPPORT SPACING																	
NOM. SIZE	IN.	THRU 3/4	1	1 1/4	1 1/2	2	2 1/2	3	4	5	6	8	10	12	14	16	18	20	24
PIPE	FT.	7	7	7	9	10	11	12	14	16	17	19	22	23	25	27	28	30	32
TUBING	FT.	5 FT	6	7	8	8	9	10	12	13	14	16	-	-	-	-	-	-	-
NOTE: FOR TRAPEZE HANGER TAKE SPACING OF SMALLEST SIZE ON TRAPEZE.																			

1 PIPE HANGER DETAIL
NTS

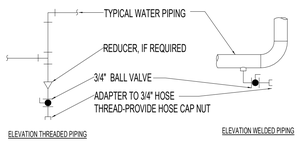

TYPICAL CHILLED AND HOT WATER PIPING DRAIN VALVE CONNECTIONS

NOTES:
1. DRAIN ALL LOW POINTS AS INDICATED ABOVE.
2. WHERE SCALE POCKETS ARE SHOWN ON PIPE RISER DIAGRAMS AND/OR PLANS LOCATE DRAIN AT BOTTOM OF SCALE POCKET.

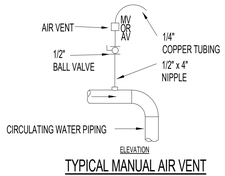

TYPICAL MANUAL AIR VENT

NOTES:
1. VENT ALL HIGH POINTS INDICATED ABOVE.
2. IF AUTOMATIC AIR VENTS ARE USED, PIPE DISCHARGE TO DRAIN.

DRAIN VALVE AND AIR VENT CONNECTIONS (HYDRONIC SYSTEMS)

8 NTS

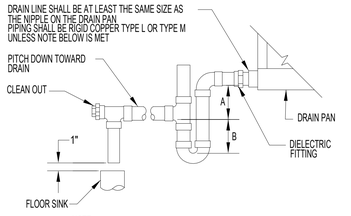

NOTE:
2. DIELECTRIC FITTING TO BE USED WHEN TWO DISSIMILAR METALS ARE TO BE CONNECTED.

UNIT TYPE	A	B
DRAW THRU	2" PLUS X	X
BLOW THRU	1" MINIMUM	2X

WHERE X = STATIC PRESSURE IN PAN

7 AIR HANDLING UNIT DRAIN TRAP DETAIL
NTS

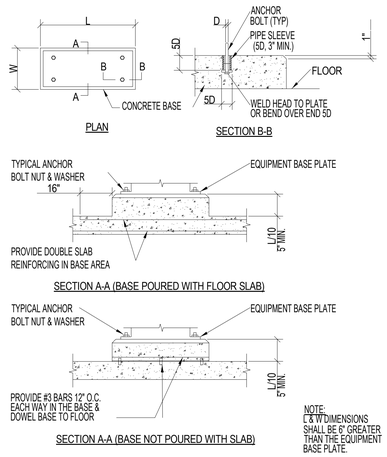

6 CONCRETE EQUIPMENT BASES
NTS

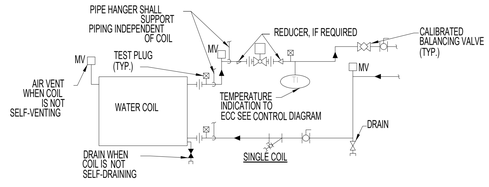

NOTES:
1. WHEN COIL IS INCLUDED IN CASING MOUNTED ON VIBRATION ISOLATORS THE FIRST 2 HANGERS FOR EACH PIPE SHALL BE SPRING & NEOPRENE TYPE. TYPE "H" FOR 4"; PIPE & SMALLER. TYPE "H-P" FOR 5" PIPE & LARGER.
2. PIPING SHALL BE INSTALLED IN SUCH MANNER THAT IT WILL NOT BLOCK THE SWING OR USE OF ACCESS DOORS OR PANELS; NEITHER SHALL IT BLOCK THE SERVICING OF FILTERS, VALES, OR EQUIPMENT.
3. ALL VALVES TO BE INSTALLED IN MECHANICAL ROOM IN AN ACCESSIBLE LOCATION FOR MAINTANCE.

5 CHILLED WATER COILS - PIPING CONNECTIONS
NTS

VA CONTRACT NO:36C77623C0052

Revisions:	Date:
100% CONSTRUCTION + BID DRAWING	10/06/2023
100% CONSTRUCTION + BID DRAWING	09/28/2023
95% CONSTRUCTION DOCUMENTS	09/01/2023
65% CONSTRUCTION DOCUMENTS	07/27/2023

CONSULTANT

ARCHITECT/ENGINEER OF RECORD
BANCROFT ARCHITECTS + ENGINEERS
3300 Dundee Rd.
Northbrook, IL 60062
T: 847.952.9362
www.bancroft-ae.com

STAMP
LICENSED PROFESSIONAL ENGINEER RAED HAMID 062.065548 OF ILLINOIS
10-06-2023

Office of Construction and Facilities Management
VA U.S. Department of Veterans Affairs

Drawing Title: MECHANICAL DETAILS
Approved: Project Director
Phase: 100% CONSTRUCTION + BID DRAWINGS
FULLY SPRINKLERED
Project Title: G.V. (Sonny) Montgomery VAMC EHRM-TASS
Location: 1500 E Woodrow Wilson Ave, Jackson, MS 39216
Issue Date: 10/06/23
Checked: DGG
Drawn: MB
Project Number: 586-22-703
Building Number: R+E
Drawing Number: M-503

VA FORM 08-6231

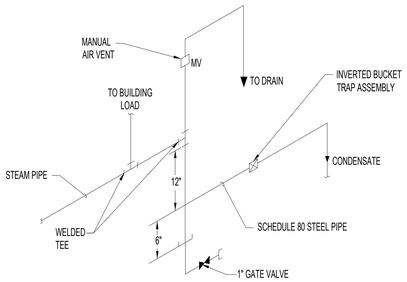

4 END OF STEAM LINE DRIP TRAP
NTS

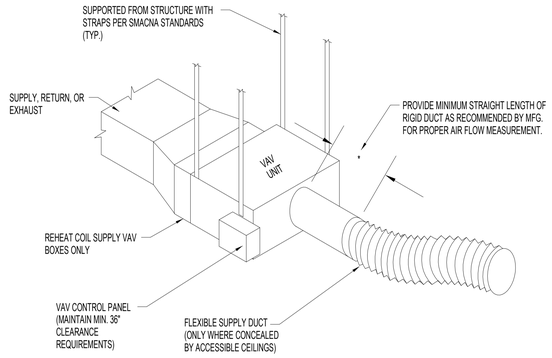

NOTES:
1. VERIFY RIGHT OR LEFT HAND CLEARANCE REQUIREMENTS WITH PLANS.

3 VAV BOX INSTALLATION
NTS

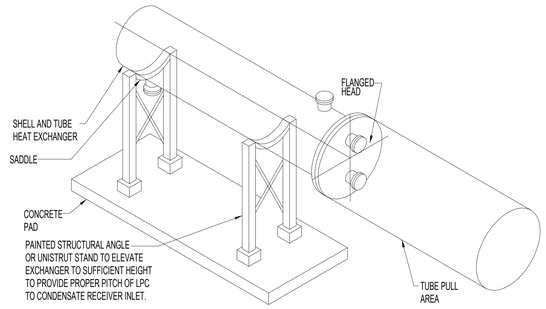

2 STEAM-TO-WATER HEAT EXCHANGER SUPPORT DETAIL
NTS

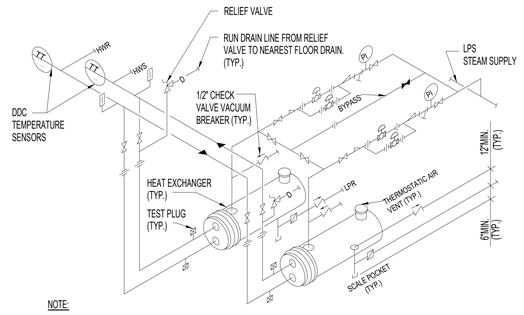

NOTE:
1. THE ABOVE DETAIL SHOWS REQUIRED PIPING FOR TWO HEAT EXCHANGERS IN PARALLEL.
2. PROVIDE SADDLE SUPPORTS AND LEGS OR HANGERS FOR HEAT EXCHANGER. MOUNTING HEIGHT SHALL BE ADJUSTED TO FACILITATE GRAVITY RETURN OF STEAM CONDENSATE.
3. MAKE THE BYPASS THE SAME SIZE AS THE CONNECTIONS TO THE CONTROL VALVES.

1 STEAM-TO-WATER HEAT EXCHANGER PIPING DETAIL
NTS

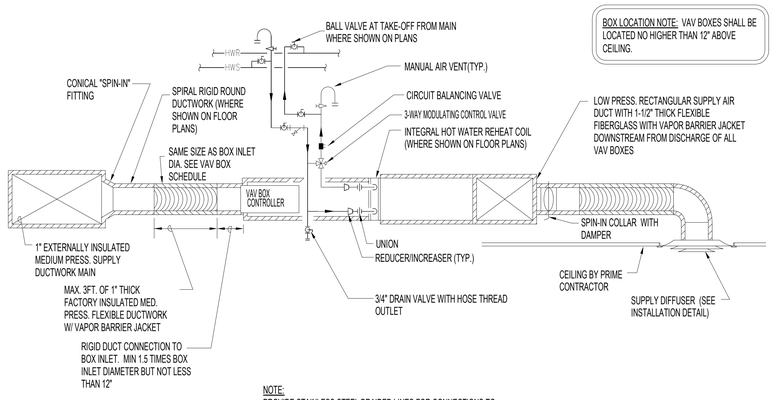

NOTE:
PROVIDE STAINLESS STEEL BRAIDED LINES FOR CONNECTIONS TO TERMINAL UNIT REHEAT COILS.

7 TERMINAL UNIT PIPING DETAIL (3-WAY VALVE) (VAV-400)
NTS

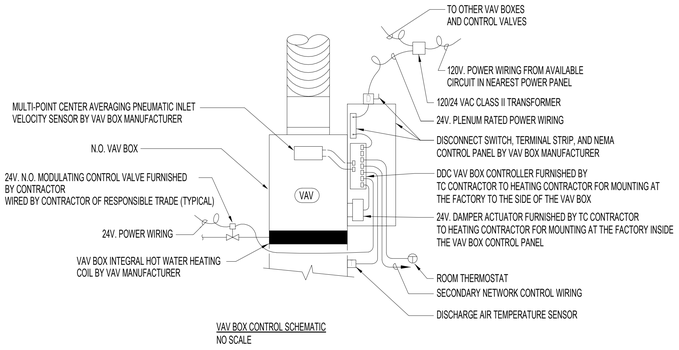

VAV BOX CONTROL SCHEMATIC
NO SCALE

NOTES:
1. ALL WORK SHOWN ABOVE SHALL BE BY THE TC CONTRACTOR UNLESS SPECIFICALLY NOTED OTHERWISE.
2. VAV BOX SHALL BE COMPLETE WITH BOX MANUFACTURER'S STANDARD AIRFLOW VELOCITY PRESSURE SENSOR.

6 VAV BOX CONTROL SCHEMATIC DIAGRAM
NTS

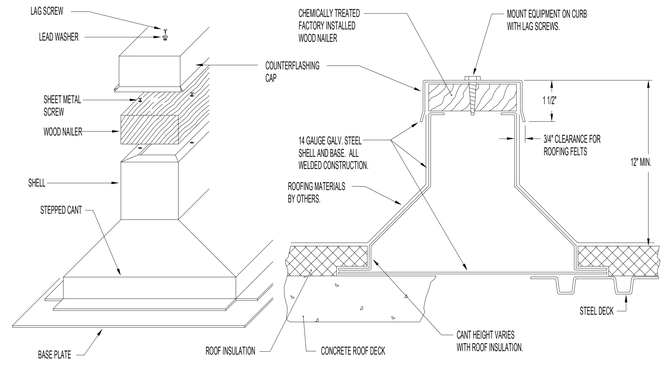

5 ROOF MOUNTED EQUIPMENT RAIL DETAIL
NTS

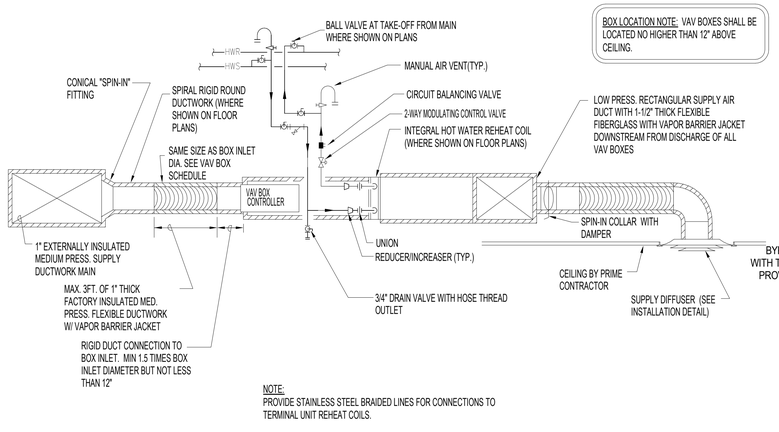

NOTE:
PROVIDE STAINLESS STEEL BRAIDED LINES FOR CONNECTIONS TO TERMINAL UNIT REHEAT COILS.

11 TERMINAL UNIT PIPING DETAIL (2-WAY VALVE)
NTS

NOTE:
1. ALL DRIP POINTS ON STEAM MAINS SHALL BE PROVIDED WITH A 12" MINIMUM HIGH DRIP LEG FROM BOTTOM OF STEAM MAIN TO TRAP INLET. DRIP LEG SHALL HAVE 6" SCALE POCKET BELOW TRAP INLET.

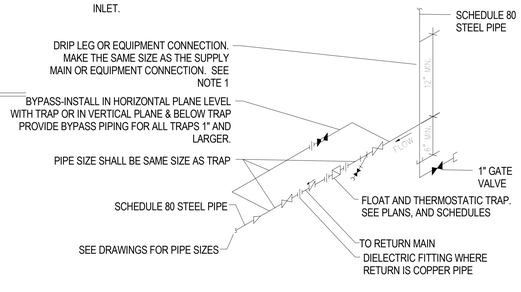

10 FLOAT AND THERMOSTATIC STEAM TRAP ASSEMBLY
NTS

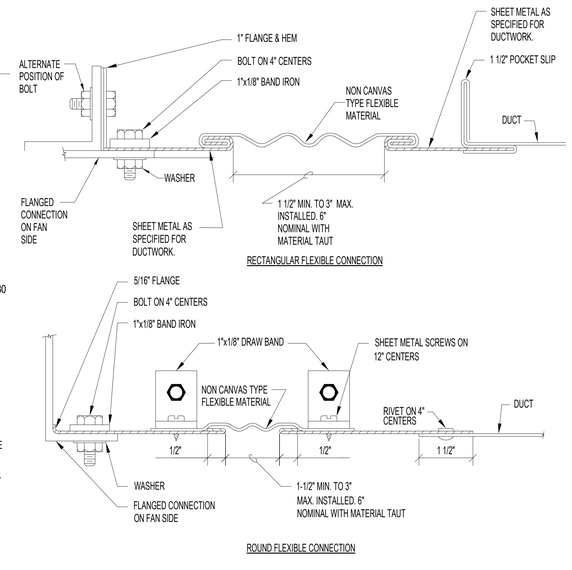

9 DUCTWORK FLEXIBLE CONNECTION DETAIL
NTS

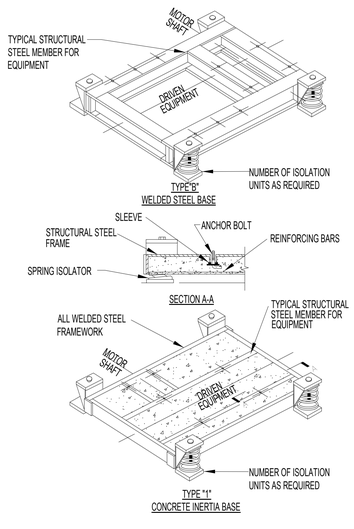

8 VIBRATION ISOLATION BASES
NTS

VA CONTRACT NO:36C77623C0052

100% CONSTRUCTION + BID DRAWING	10/06/2023
100% CONSTRUCTION + BID DRAWING	09/28/2023
95% CONSTRUCTION DOCUMENTS	09/01/2023
65% CONSTRUCTION DOCUMENTS	07/27/2023
Revisions:	Date:

CONSULTANT

ARCHITECT/ENGINEER OF RECORD

BANCROFT ARCHITECTS + ENGINEERS
3300 Dundee Rd.
Northbrook, IL 60062
T: 847.952.9362
www.bancroft-ae.com

STAMP
LICENSED PROFESSIONAL ENGINEER RAED HAMID 062.065546 OF ILLINOIS
10-06-2023

Office of Construction and Facilities Management

VA U.S. Department of Veterans Affairs

Drawing Title: MECHANICAL DETAILS

Approved: Project Director

Phase: 100% CONSTRUCTION + BID DRAWINGS

FULLY SPRINKLERED

Project Title: G.V. (Sonny) Montgomery VAMC EHRM-TASS

Location: 1500 E Woodrow Wilson Ave, Jackson, MS 39216

Issue Date: 10/06/23 | Checked: DGG | Drawn: MB

Project Number: 586-22-703

Building Number: R+E

Drawing Number: M-504

VA FORM 08-6231

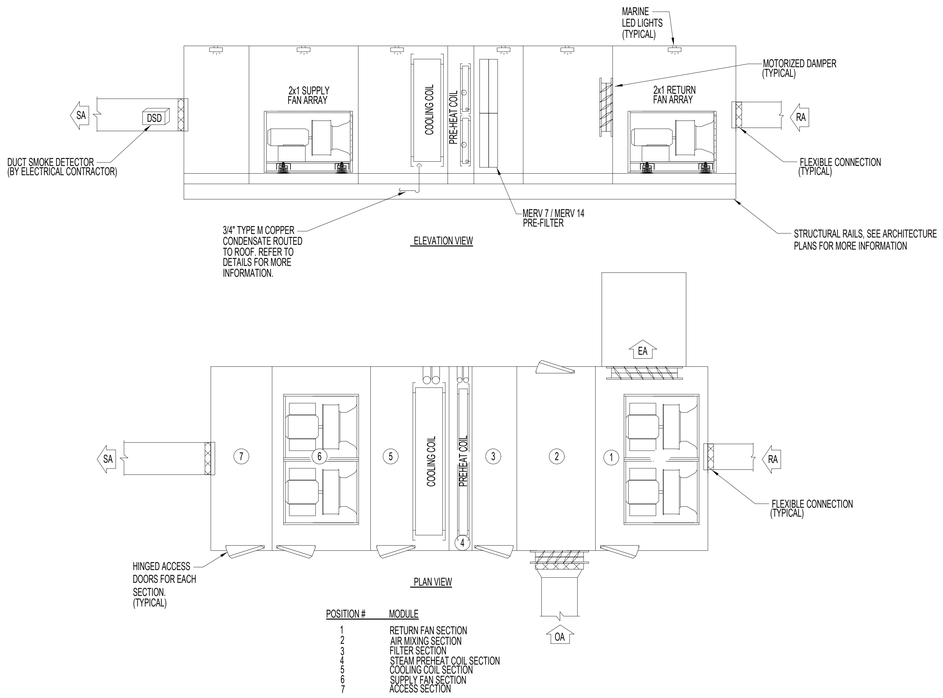

POSITION #	MODULE
1	RETURN FAN SECTION
2	AIR MIXING SECTION
3	FILTER SECTION
4	STEAM PREHEAT COIL SECTION
5	COOLING COIL SECTION
6	SUPPLY FAN SECTION
7	ACCESS SECTION

1 AIR HANDLING UNIT DETAIL (AHU-4)

NTS

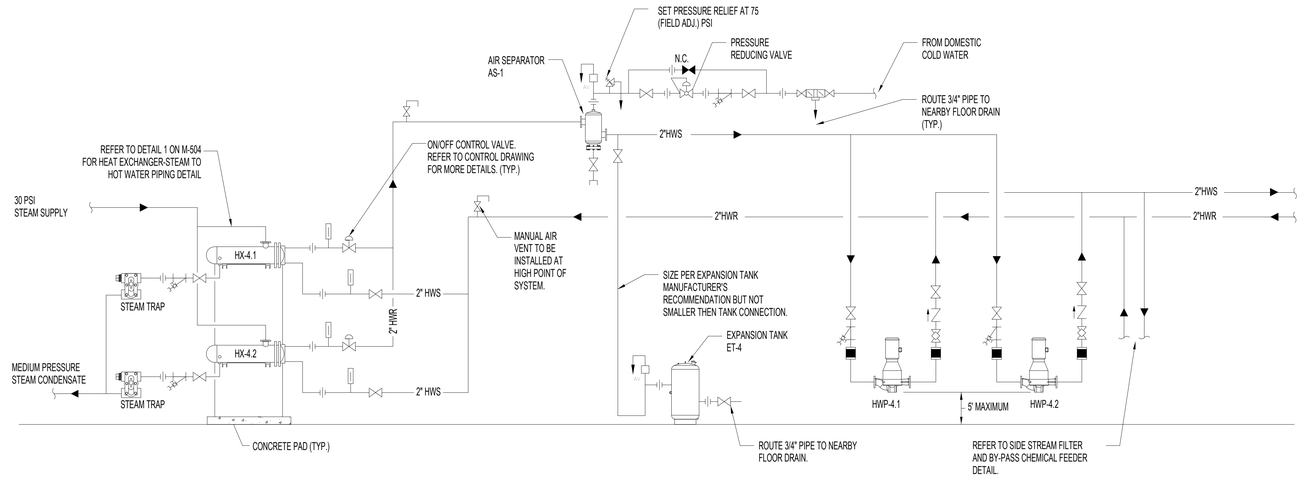

2 HOT WATER RE-HEAT FLOW DIAGRAM

NTS

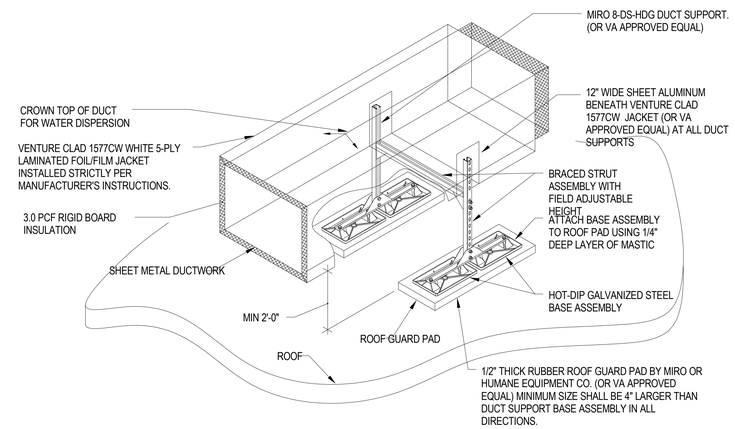

3 EXTERIOR DUCT SUPPORT DETAIL

NTS

NOTES:

1. PROVIDE QUANTITY OF DUCT SUPPORTS AS REQUIRED SUCH THAT INSTALLED WEIGHT DOES NOT EXCEED 300 LBS. PER DUCT SUPPORT OR 150 LBS. ON EACH BASE.
2. SPACING NOT TO EXCEED 6'-0" CENTERS.
3. CROSSBRACE TWO PIPESTANDS EVERY FOURTH (4TH) PIPESTAND FOR ELEVATIONS 24" AND HIGHER.
4. IT IS NOT ACCEPTABLE FOR DUCT SUPPORT TO PENETRATE VENTURE CLAD JACKET.

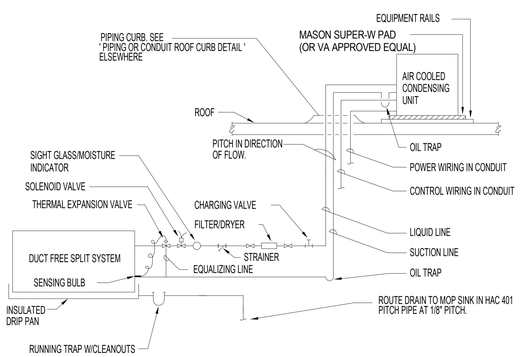

NOTES:

1. REFRIGERANT PIPING AS SHOWN IS TO ILLUSTRATE GENERAL REQUIREMENTS. PIPING SHALL BE SIZED, PITCHED, AND ARRANGED PER CONDENSING UNIT MANUFACTURER'S RECOMMENDATIONS AND REQUIREMENTS.

4 COMPUTER ROOM DUCT FREE SPLIT SYSTEM REFRIGERANT PIPING DETAIL

NTS

VA CONTRACT NO:36C77623C0052

100% CONSTRUCTION + BID DRAWING	10/06/2023
100% CONSTRUCTION + BID DRAWING	09/28/2023
95% CONSTRUCTION DOCUMENTS	09/01/2023
65% CONSTRUCTION DOCUMENTS	07/27/2023
Revisions:	Date:

CONSULTANT

ARCHITECT/ENGINEER OF RECORD

BANCROFT ARCHITECTS + ENGINEERS
3300 Dundee Rd.
Northbrook, IL 60062
T: 847.952.9362
www.bancroft-ae.com

STAMP

LICENSED PROFESSIONAL ENGINEER RAED HAMID 062.065548 OF ILLINOIS
10-06-2023

Office of Construction and Facilities Management

VA U.S. Department of Veterans Affairs

Drawing Title: MECHANICAL DETAILS

Approved: Project Director

Phase: 100% CONSTRUCTION + BID DRAWINGS

FULLY SPRINKLERED

Project Title: G.V. (Sonny) Montgomery VAMC EHRM-TASS

Location: 1500 E Woodrow Wilson Ave, Jackson, MS 39216

Issue Date: 10/06/23 | Checked: DGG | Drawn: MB

Project Number: 586-22-703

Building Number: R+E

Drawing Number: M-505

VA FORM 08-6231

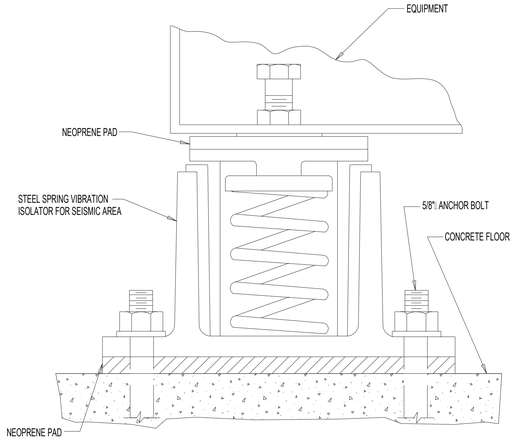

4 VIBRATION ISOLATOR DETAIL
NTS

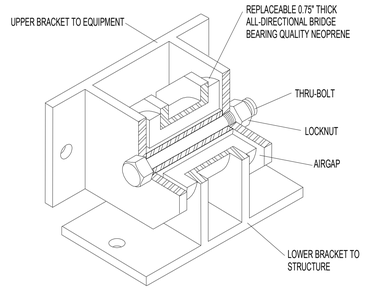

3 ALL DIRECTIONAL SEISMIC SNUBBER
NTS

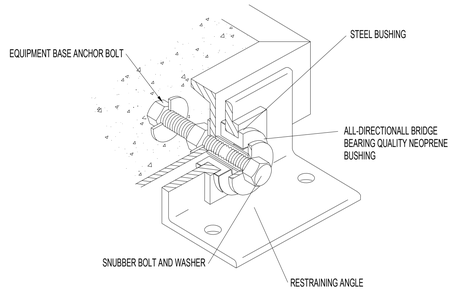

2 ALL DIRECTIONAL SEISMIC SNUBBER
NTS

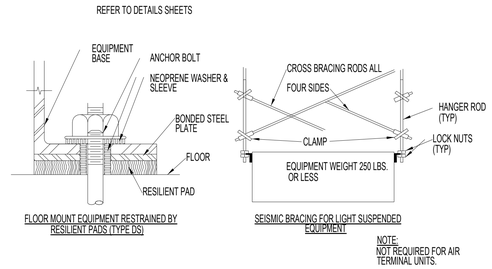

1 SEISMIC BRACING FOR EQUIPMENT
NTS

NOTE TO CONTRACTOR:
THESE DETAILS ARE DIAGRAMMATIC. ALL FINAL SEISMIC RESTRAINTS SHALL BE IN ACCORDANCE WITH SPECIFICATIONS SECTION 13 05 41 AND VA HANDBOOK H-18-8. NON STRUCTURAL SEISMIC RESTRAINT SYSTEMS SHALL BE DESIGNED BY A PROFESSIONAL STRUCTURAL ENGINEER AS DELEGATED BY THE CONTRACTOR. ALL SEISMIC RESTRAINTS SHALL MEET REQUIREMENTS OF RISK CATEGORY IV SEISMIC DESIGN CATEGORY D.

SEISMIC BRACING NOTES

GENERAL

1. NO BRACING IS REQUIRED IF THE TOP OF THE DUCT OR PIPE IS SUSPENDED 12 INCHES OR LESS FROM THE SUPPORTING STRUCTURAL MEMBER.

2. WALLS, INCLUDING DRYWALL PARTITIONS, MAY REPLACE REQUIRED TRANSVERSE OR VERTICAL BRACING FOR DUCTWORK OR PIPING.

3. ALL SEISMIC RESTRAINTS SHALL MEET OR EXCEED REQUIREMENTS OF SMACNA PUBLICATION "SEISMIC RESTRAINT MANUAL GUIDELINES FOR MECHANICAL SYSTEMS" 1991 EDITION.

DUCTWORK

4. BRACE ALL RECTANGULAR DUCTS OF 6 SQ. FT. CROSS SECTIONAL AREA AND LARGER. BRACE ALL ROUND/OVAL DUCTS 28 INCHES IN DIAMETER AND LARGER.

5. TRANSVERSE AND VERTICAL BRACING SHALL OCCUR AT 30 FOOT INTERVALS, MAXIMUM. LONGITUDINAL BRACING SHALL OCCUR AT 60 FOOT INTERVALS, MAXIMUM.

PIPING

6. BRACE ALL PIPES 2 1/2 INCHES IN DIAMETER AND LARGER. IN MECHANICAL ROOMS ALSO BRACE 1 1/4", 1 1/2" AND 2 INCH PIPING AS FOR 2 1/2" PIPING. BRACE ALL FUEL GAS AND COMPRESSED AIR PIPING 1" AND LARGER.

7. TRANSVERSE AND VERTICAL BRACING SHALL OCCUR AT 40 FOOT INTERVALS, MAXIMUM UNLESS NOTED OTHERWISE. LONGITUDINAL BRACING SHALL OCCUR AT 80 FOOT INTERVALS, MAXIMUM. WHEN THERMAL EXPANSION OR CONTRACTION IS INVOLVED, PROVIDE LONGITUDINAL BRACING AT ANCHOR POINTS. THE LONGITUDINAL BRACES AND THE CONNECTIONS MUST BE CAPABLE OF RESISTING THE FORCE INDUCED BY EXPANSION AND CONTRACTION.

8. AT PIPE RISERS, WHEREVER POSSIBLE, SUPPORT THE WEIGHT OF THE RISER AT A POINT OR POINTS ABOVE THE CENTER OF GRAVITY OF THE RISER.

9. DO NOT FASTEN ONE RIGID PIPING SYSTEM TO DISSIMILAR PARTS OF THE BUILDING THAT MAY RESPOND IN A DIFFERENT MODE DURING AN EARTHQUAKE; FOR EXAMPLE, A WALL AND A ROOF.

10. DO NOT USE BRANCH LINES TO BRACE MAIN LINES.

EQUIPMENT

11. FLOOR OR PAD MOUNTED EQUIPMENT, WITHOUT VIBRATION ISOLATORS, SHALL BE BOLTED TO THE OTHER SUPPORT.

12. FLOOR MOUNTED EQUIPMENT, WITH VIBRATION ISOLATORS, SHALL BE PROVIDED WITH LATERAL AND VERTICAL RESTRAINING DEVICES ON ALL SIDES OF THE BASE TO RESTRICT DISPLACEMENT OF THE EQUIPMENT.

13. ON ALL SIDES OF SUSPENDED EQUIPMENT, PROVIDE BRACING FOR RIGID SUPPORTS AND PROVIDE RESTRAINTS FOR RESILIENTLY SUPPORTED EQUIPMENT.

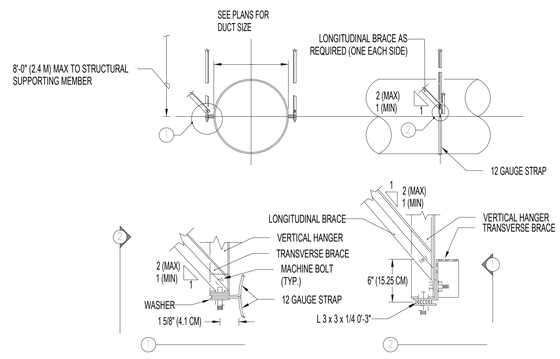

BRACING FOR ROUND DUCTS
NO SCALE

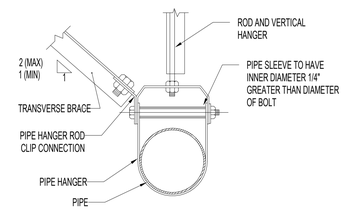

TRANSVERSE BRACING FOR PIPES
NO SCALE

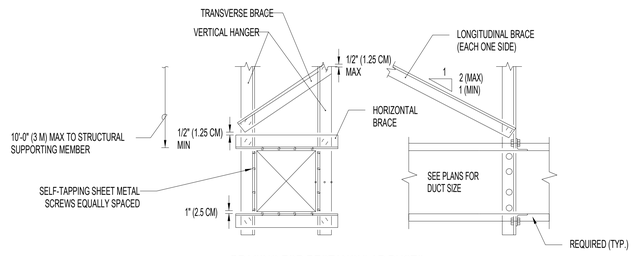

BRACING FOR RECTANGULAR DUCTS
NO SCALE

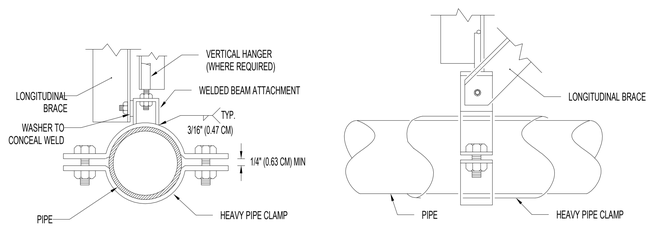

LONGITUDINAL BRACING FOR PIPES
NO SCALE

7 SEISMIC BRACING FOR PIPES AND ROUND AND RECTANGULAR DUCTS
NTS

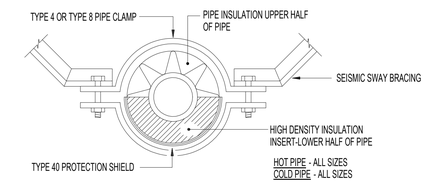

5 SEISMIC SWAY BRACE DETAIL (INSULATED NON SPRINKLER PIPIPNG)
NTS

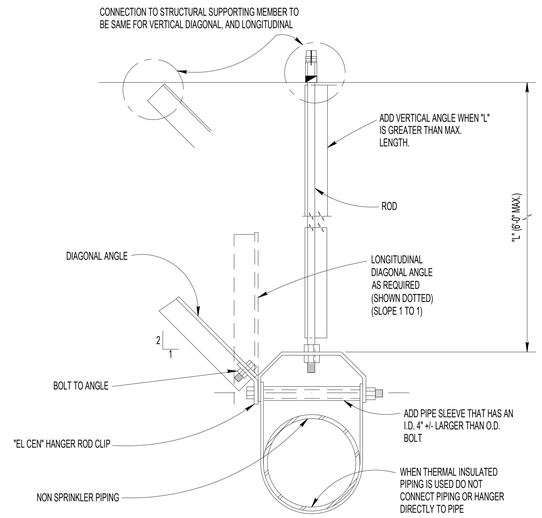

6 TYPICAL SEISMIC PIPE BRACING (2 1/2" Ø AND LARGER PIPING)
NTS

VA CONTRACT NO:36C77623C0052

100% CONSTRUCTION + BID DRAWING	09/28/2023
95% CONSTRUCTION DOCUMENTS	09/01/2023
65% CONSTRUCTION DOCUMENTS	07/27/2023
Revisions:	Date:

CONSULTANT

ARCHITECT/ENGINEER OF RECORD
BANCROFT ARCHITECTS + ENGINEERS
3300 Dundee Rd.
Northbrook, IL 60062
T: 847.952.9362
www.bancroft-ae.com

STAMP
LICENSED PROFESSIONAL ENGINEER RAED HAMID 062.065548 OF ILLINOIS
10-06-2023

Office of Construction and Facilities Management
VA U.S. Department of Veterans Affairs

Drawing Title: MECHANICAL DETAILS
Approved: Project Director

Phase: 100% CONSTRUCTION + BID DRAWINGS
FULLY SPRINKLERED

Project Title: G.V. (Sonny) Montgomery VAMC EHRM-TASS
Location: 1500 E Woodrow Wilson Ave, Jackson, MS 39216
Issue Date: 10/06/23 | Checked: DGG | Drawn: MB

Project Number: 586-22-703
Building Number: R+E
Drawing Number: M-506

VA FORM 08-6231

AIR HANDLING UNIT SCHEDULE

EQUIPMENT TAG	BASIS OF DESIGN		LOCATION	TYPE OF SYSTEM	APPROX. OVERALL DIMENSIONS (IN.)			WEIGHT (LBS)	MIN. O.A. (TOTAL/ OPERATING)	SUPPLY FAN										CHW COOLING COIL												STEAM PREHEAT COIL								RETURN FAN										PRE FILTERS TYPE	NOTES
										SUPPLY CFM (TOTAL/ OPERATING)	TSP (IN. WG)	ESP (IN. WG)	TYPE	FAN RPM	MOTOR																													MOTOR									
	MANUFACTURER	MODEL			H	W	L								BHP	HP	MCA	MOCP	PH	VOLT	EAT DB/WB (°F)	LAT DB/WB (°F)	EWT (°F)	LWT (°F)	AIR P.D. (IN)	AIR VELOCITY (FPM)	TOTAL MBH	SENSIBLE MBH	ROWS/ FPI	FLUID TYPE	FLUID P.D. (FT)	GPM	EAT DB (°F)	LAT DB (°F)	STEAM PRESSURE (PSI)	STEAM FLOW (LBS/HR)	TOTAL MBH	AIR P.D. (IN)	COIL FACE AREA (FT^2)	ROWS/ FPI	RETURN CFM	TSP (IN. WG)	ESP (IN.)	TYPE	FAN RPM	BHP	HP	MCA	MOCP	PH	VOLT		
AHU-4	TRANE	CSSA021	ROOF	VAV	59	80	214	5,212	3,000 / 2,400	10,000 / 8,045	5.5	3.0	AIRFOIL	2,839	15.3	20	31.5	45	3	460	81.4/67.4	53/52.8	44	54	0.77	504	449	313	6 / 10	WATER	6.4	89.5	50.4	85.97	30	415	386	0.99	17.0	1 / 3	7,000	2.7	1.5	AIRFOIL	2,137	7.91	15.0	24.75	35	3	480	MERV 7 / MERV 14	1,2,3,4,5,6,7,8,9,10, 11,12,13,14,15,16

NOTES:
1. OTHER ACCEPTABLE MANUFACTURERS: VA APPROVED EQUALS
2. FACTORY-PROVIDED DUAL-PANE THERMAL WINDOW IN EACH APPLICABLE ACCESS DOOR.
3. INTERNAL SPRING VIBRATION ISOLATORS FOR EACH FAN.
4. SAME END HOT WATER, CHILLED WATER AND STEAM COIL CONNECTIONS.
5. HINGED ACCESS DOORS AND MARINE LIGHTS AT EACH SECTION.
6. ENTIRE UNIT INCLUDING ACCESS DOORS SHALL BE DOUBLE WALL CONSTRUCTION.
7. STAINLESS STEEL DRAIN PAN WITH SIDE PAN CONNECTION COOLING COIL SECTIONS.
8. ALL CONTROLS, ACTUATORS, & END DEVICES TO BE FIELD PROVIDED & INSTALLED BY BAS CONTRACTOR.
9. PROVIDE TEST AND BALANCE PORTS ON ALL ACCESS DOOR - FACTORY INSTALLED TO PRESERVE LEAK-TIGHT INTEGRITY OF UNIT CASING.
10. COORDINATE LEFT HANDED/RIGHT HANDED COIL CONNECTIONS WITH DESIGN DRAWINGS AND EXISTING FIELD CONDITIONS.
11. UNIT TO BE SHIPPED IN SECTIONS FOR ASSEMBLY IN FIELD.
12. MAGNEHELIC GAGES ACROSS EACH FILTER.
13. REFER TO AHU DETAILS FOR MORE INFORMATION ON UNIT CONFIGURATION.
14. PROVIDE FANS WITH PREMIUM EFFICIENCY MOTORS, SHAFT GROUNDING RING, AND VARIABLE FREQUENCY DRIVES (VFD) ONE FOR THE SUPPLY FANS AND ONE FOR THE RETURN FANS. SIZE VFD TO ACCOMMODATE BOTH FANS.
15. VARIABLE FREQUENCY DRIVE (VFD) TO BE EQUIPPED WITH BYPASS AND NON-FUSE DISCONNECT.
16. PROVIDE INSULATED PIPE PORTAL.

VARIABLE FREQUENCY DRIVES

EQUIPMENT TAG	LOCATION	EQUIPMENT SERVED	MANUFACTURER	MODEL	MOUNTING	SIZE (IN.)			MAX. DRIVE OUTPUT CURRENT	MOTOR					NOTES
						H	W	D		HP (MAX.)	RPM	FREQ (Hz)	PHASE	VOLT	
VFD-HWP-4-1	5TH FLOOR MECHANICAL ROOM	HWP-4.1	DANFOSS	VLT FC-101 SERIES	WALL MOUNTED	10.7 x	3.0 x	6.6	2.1	3/4	1750	60	3	480	1,2
VFD-HWP-4-2	5TH FLOOR MECHANICAL ROOM	HWP-4.2	DANFOSS	VLT FC-101 SERIES	WALL MOUNTED	10.7 x	3.0 x	6.6	2.1	3/4	1750	60	3	480	1,2

NOTES:
1. OTHER ACCEPTABLE MANUFACTURERS: VA APPROVED EQUAL
2. PROVIDE NEMA 1 ENCLOSURE, INPUT DISCONNECT SWITCH, OUTPUT LINE REACTOR, AND BACNET INTERFACE.

EXHAUST FAN SCHEDULE

EQUIPMENT TAG	BASIS OF DESIGN		LOCATION	AREA SERVED	TYPE	DRIVE	WEIGHT (LBS)	CFM	SP (IN.)	MAXIMUM SONES	FAN RPM	BHP	MOTOR				CONTROL TYPE	NOTES
	MANUFACTURER	MODEL											HP	RPM	PHASE	VOLT		
EF-4	GREENHECK	G-098-A	ROOF	4TH FLOOR	CENTRIFUGAL ROOF EXHAUST FAN	DIRECT	48	495	1.25	10.6	1,725	0.18	1/4	1725	1	115	BAS	1,2,3,4,5,6

NOTES:
1. OTHER ACCEPTABLE MANUFACTURERS: VA APPROVED EQUALS
2. PROVIDE THE FOLLOWING OPTIONS: MOTORIZED DAMPER, NEMA 3R DISCONNECT SWITCH, AND SPEED CONTROLLER
3. PROVIDE ALUMINUM BIRDSCREEN.
4. PROVIDE PRE-FABRICATED 18" TALL INSULATED ROOF CURB.
5. FAN SHALL COME IN STANDARD ENAMEL GREY COLOR.
6. MOTORIZED DAMPER POWER SHALL BE FROM FAN CIRCUIT VIA INTEGRAL TRANSFORMER.

HYDRONIC ACCESSORIES SCHEDULE

EQUIPMENT TAG	EQUIPMENT TYPE	LOCATION	SERVICE	MANUFACTURER	MODEL	TYPE	CAPACITY/ SIZE	FILL (PSI)	OPERATING (PSI)	WEIGHT (LBS)	NOTES
AS-4	AIR SEPARATOR	5TH FLOOR MECHANICAL ROOM	HOT WATER SYSTEM	B & G	EAS-2	TANGENTIAL	45 GPM/ 2" INLET, 2" OUTLET	-	-	15.5	1
ET-4	EXPANSION TANK	5TH FLOOR MECHANICAL ROOM	HOT WATER SYSTEM	B & G	B35	BLADDER	10 GALLON TANK, 10 GALLON ACCPETANCE	25	125	123	1

NOTES:
1. OTHER ACCEPTABLE MANUFACTURERS: VA APPROVED EQUAL.

SHELL AND TUBE HEAT EXCHANGER SCHEDULE

EQUIPMENT TAG	LOCATION	MANUFACTURER	MODEL	SERVICE	TYPE	CAPACITY (MBH)	PHYSICAL DATA				SHELL SIDE (STEAM)			TUBE SIDE (WATER)					NOTES
							PASSES	DIA. (IN.)	LENGTH (IN.)	SURFACE AREA (SQ. FT.)	FOULING FACTOR	ENT. PRES. (PSI)	FLOW RATE (LB/HR)	FOULING FACTOR	EWT (°F)	LWT (°F)	GPM	PD (FT.)	
HX-4.1	5TH FLOOR MECHANICAL ROOM	BELL & GOSSET	SU-42-4	HOT WATER HEATING SYSTEM	SHELL AND TUBE	196.5	2	4.5	28.5	4.2	0.50%	30	203.2	0.50%	140	160	20	6.5	1,2,3,4
HX-4.2	5TH FLOOR MECHANICAL ROOM	BELL & GOSSET	SU-42-4	HOT WATER HEATING SYSTEM	SHELL AND TUBE	196.5	2	4.5	28.5	4.2	0.50%	30	203.2	0.50%	140	160	20	6.5	1,2,3,4

NOTES:
1. OTHER ACCEPTABLE MANUFACTUERS: VA APPROVED EQUALS
2. ASME DESIGNED AND STAMPED.
3. FLANGED INLETS/OUTLET CONNECTIONS.
4. STEAM PRESSURE INDICATED IS THE PRESSURE AVAILABLE DOWNSTREAM OF THE CONTROL VALVE.

DIFFUSER, GRILLE, AND REGISTER SCHEDULE

EQUIPMENT TAG	MANUFACTURER	MODEL	TYPE	NOMINAL FACE SIZE	MATERIAL	MAX. N.C.	NOTES
A	TITUS	OMNI	SQUARE PANEL FACE	24"x24"	STEEL	30	1,2,3
B	TITUS	45F	EGG CRATE	VARIES	ALUMINUM	30	1,2,3
C	TITUS	300R	DOUBLE DEFLECTION REGISTER	12x8	STEEL	30	1,2,3

NOTES:
1. OTHER ACCEPTABLE MANUFACTURERS: VA APPROVED EQUALS.
2. FINISH AS SELECTED BY ARCHITECT.
3. COORDINATE FRAME TYPE WITH CEILING/WALL TYPE AND ARCHITECT.

PUMP SCHEDULE

EQUIPMENT TAG	LOCATION	SERVICE	MANUFACTURER	MODEL	TYPE	GPM	HEAD (FT.)	IMP. DIA. (IN.)	RPM	MINIMUM EFFICIENCY	TRIPLE DUTY VALVE			MOTOR			NOTES
											TYPE	SIZE	P.D. (FT.)	HP	PHASE	VOLT	
HWP-4.1	5TH FLOOR MECHNICAL ROOM	4TH FLOOR	BELL & GOSSETT	5SV13	IN-LINE	20.0	65.0	6 1/8	1748	67.0%	3DV-2NMF	2"	4.0	0.75	3	460	1,2
HWP-4.2	5TH FLOOR MECHNICAL ROOM	4TH FLOOR	BELL & GOSSETT	5SV13	IN-LINE	20.0	65.0	6 1/8	1748	67.0%	3DV-2NMF	2"	4.0	0.75	3	460	1,2

NOTES:
1. OTHER ACCEPTABLE MANUFACTURERS: VA APPROVED EQUAL
2. DISCONNECT BY ELECTRICAL CONTRACTOR
3. PROVIDE PREMIUM EFFICIENCY MOTORS WITH SHAFT GROUNDING RING, VFD, AND BACNET COMPATIBLE.
4. PROVIDE VIBRATION ISOLATOR TO MEET VA SPECIFICATION.

ELECTRIC WALL HEATER SCHEDULE

GENERAL					HEATER			ELECTRICAL DATA			NOTES
EQUIPMENT TAG	LOCATION	TYPE	MANUFACTURER	MODEL	KW	PHASE	VOLT	AMPS	PHASE	VOLT	
EWH-401	HAC 401	RECESSED WALL	BERKO	FAR1512F	1.5	1	120	12.5	1	120	1

NOTES:
1. OTHER ACCEPTABLE MANUFACTURERS: SEE SPECIFICATIONS.

DUCT FREE SPLIT SYSTEM SCHEDULE

EQUIPMENT TAG	LOCATION	BASIS OF DESIGN	COOLING CAPACITY (BTUH)	INDOOR UNIT									OUTDOOR UNIT											NOTES
				MODEL	TYPE	DIMENSIONS (IN.)			AIRFLOW			FILTERS	EQUIPMENT TAG	MODEL	LOCATION	COMPRESSOR				ELECTRICAL DATA				
						H	W	D	TOTAL CFM	EAT. D.B. (°F)	EAT. W.B. (°F)	TYPE				SIZE (TONS)	REF. TYPE	EAT (°F)	SEER	MCA	MOCP	PHASE	VOLTS	
DFSS-402.1	TR-402	CARRIER	24,000	40MAHBQ24XA3	HIGH WALL	15	45	11	720	75°	67°	CLEANABLE	CU-402.1	38MARBQ24AA3	ROOF	2	R-410A	95	21.5	25	35	1	208	1,2,3
DFSS-402.2	TR-402	CARRIER	24,000	40MAHBQ24XA3	HIGH WALL	15	45	11	720	75°	67°	CLEANABLE	CU-402.2	38MARBQ24AA3	ROOF	2	R-410A	95	21.5	25	35	1	208	1,2,3

NOTES:
1. ACCEPTABLE MANUFACTURERS: VA APPROVED EQUALS
2. INDOOR UNIT SHALL BE INTERLOCKED TO OUTDOOR UNIT FOR POWER AND CONTROL WIRING.
3. WALL MOUNTED TEMPERATURE SENSOR.

VA CONTRACT NO:36C77623C0052

100% CONSTRUCTION + BID DRAWING	10/06/2023
100% CONSTRUCTION + BID DRAWING	09/28/2023
95% CONSTRUCTION DOCUMENTS	09/01/2023
Revisions:	Date:

CONSULTANT

ARCHITECT/ENGINEER OF RECORD

BANCROFT ARCHITECTS + ENGINEERS
3300 Dundee Rd.
Northbrook, IL 60062
T: 847.952.9362
www.bancroft-ae.com

STAMP

LICENSED PROFESSIONAL ENGINEER RAED HAMID 062.065548 OF ILLINOIS
10-06-2023

Office of Construction and Facilities Management

VA U.S. Department of Veterans Affairs

Drawing Title: MECHANICAL SCHEDULES

Approved: Project Director

Phase: 100% CONSTRUCTION + BID DRAWINGS

FULLY SPRINKLERED

Project Title: G.V. (Sonny) Montgomery VAMC EHRM-TASS

Location: 1500 E Woodrow Wilson Ave, Jackson, MS 39216

Issue Date: 10/06/23 | Checked: DGG | Drawn: MB

Project Number: 586-22-703

Building Number: R+E

Drawing Number: M-601

VA FORM 08-6231

VAV BOX WITH HOT WATER REHEAT SCHEDULE

EQUIPMENT TAG	LOCATION	MANUFACTURER	MODEL	AIRFLOW (CFM)		APPROX. DIMENSIONS (IN.)					HOT WATER COIL							NOISE LEVEL(NC)		INTEGRAL SOUND ATTENUATOR	NOTES
				MIN.	MAX.	INLET SIZE	OUTLET SIZE	H	L	W	HEATING CFM	CAPACITY (MBH)	EAT (°F)	LAT (°F)	EWT (°F)	GPM	ROWS	RADIATED	DISCHARGE		
VAV-400	4TH FLOOR	TITUS	DESV	135	230	6	12x8	8.0	15.5	12.0	230	7.0	55	78	160	0.6	1	15	23	NO	1,2,3,4,5,6,7,8
VAV-400D	4TH FLOOR	TITUS	DESV	75	130	6	12x8	8.0	15.5	12.0	130	5.3	55	86	160	0.5	1	-	17	NO	1,2,3,4,5,6,7,8
VAV-402	4TH FLOOR	TITUS	DESV	50	50	6	12x8	8.0	15.5	12.0	-	-	55	79	-	-	-	14	22	NO	1,2,3,4,5,6,7,8
VAV-403	4TH FLOOR	TITUS	DESV	220	675	10	14x12.5	12.5	15.5	14.0	675	16.9	55	74	160	1.6	1	23	31	NO	1,2,3,4,5,6,7,8
VAV-404	4TH FLOOR	TITUS	DESV	450	450	8	12x10	10.0	15.5	12.0	450	12.0	55	76	160	1.2	1	19	31	NO	1,2,3,4,5,6,7,8
VAV-405	4TH FLOOR	TITUS	DESV	480	775	10	14x12.5	12.5	15.5	14.0	775	18.5	55	73	160	2.0	1	23	32	NO	1,2,3,4,5,6,7,8
VAV-406	4TH FLOOR	TITUS	DESV	435	750	10	14x12.5	12.5	15.5	14.0	750	18.1	55	74	160	1.9	1	23	32	NO	1,2,3,4,5,6,7,8
VAV-407	4TH FLOOR	TITUS	DESV	450	775	10	14x12.5	12.5	15.5	14.0	775	18.5	55	73	160	2.0	1	23	32	NO	1,2,3,4,5,6,7,8
VAV-408	4TH FLOOR	TITUS	DESV	215	530	8	12x10	10.0	15.5	12.0	530	12.5	55	73	160	1.1	1	20	32	NO	1,2,3,4,5,6,7,8
VAV-409	4TH FLOOR	TITUS	DESV	465	800	10	14x12.5	12.5	15.5	14.0	800	18.7	55	73	160	2.0	1	23	32	NO	1,2,3,4,5,6,7,8
VAV-410	4TH FLOOR	TITUS	DESV	430	750	10	14x12.5	12.5	15.5	14.0	750	17.9	55	73	160	1.8	1	23	32	NO	1,2,3,4,5,6,7,8
VAV-412	4TH FLOOR	TITUS	DESV	480	800	10	14x12.5	12.5	15.5	14.0	800	18.7	55	73	160	2.0	1	23	32	NO	1,2,3,4,5,6,7,8
VAV-413	4TH FLOOR	TITUS	DESV	480	800	10	14x12.5	12.5	15.5	14.0	800	12.5	55	73	160	2.0	1	20	32	NO	1,2,3,4,5,6,7,8
VAV-414	4TH FLOOR	TITUS	DESV	480	530	8	12x10	10.0	15.5	12.0	530	12.5	55	77	160	1.1	1	20	32	NO	1,2,3,4,5,6,7,8

NOTES:
1. OTHER ACCEPTABLE MANUFACTURERS: VA APPROVED EQUAL
2. BOX SHALL BE LINED WITH 1" FIBER-FREE INSULATION.
3. SOUND LEVELS (NC) AST FULL AIR FLOW WITH 0.75" INLET STATIC PRESSURE AND 0.5" DISCHARGE PRESSURE. NOISE CRITERIA (NC) SOUND INFORMATION IS BASED ON ARI-880-98.
4. REGARDLESS OF HOT WATER COIL AIR PRESSURE DROP, AVAILABLE DISCHARGE STATIC PRESSURE SHALL NOT BE LESS THAN 0.25" AT AIR FLOW RATE SCHEDULED.
5. HOT WATER COIL WATER PRESSURE DROP SHALL NOT EXCEED 5' AND AIR PRESSURE DROP SHALL NOT EXCEED 0.3" WG.
6. VAV MANUFACTURER TO MOUNT IN FACTORY THE DDC CARD/CONTROLLER AND DAMPER ACTUATOR FURNISHED BY THE T.C. CONTRACTOR. BOXES SHALL NOT BE RELEASED FOR PRODUCTION UNTIL BOX MANUFACTURER HAS COORDINATED WITH T.C. CONTRACTOR.
7. COORDINATE LEFT HANDED/RIGHT HANDED COIL CONNECTIONS WITH DESIGN DRAWINGS AND EXISTING FIELD CONDITIONS
8. PROVIDE NECESSARY 120V / 24V POWER SUPPLY FOR CONTROLLER POWER. COORDINATE WITH ELECTRICAL DRAWINGS FOR QUANTITY AND LOCATION.

VA CONTRACT NO:36C77623C0052

Revisions:	Date:
100% CONSTRUCTION + BID DRAWING	10/06/2023
100% CONSTRUCTION + BID DRAWING	09/28/2023
95% CONSTRUCTION DOCUMENTS	09/01/2023

CONSULTANT

ARCHITECT/ENGINEER OF RECORD

BANCROFT ARCHITECTS + ENGINEERS
3300 Dundee Rd.
Northbrook, IL 60062
T: 847.952.9362
www. bancroft-ae.com

STAMP

LICENSED PROFESSIONAL ENGINEER RAED HAMID 062.065548 OF ILLINOIS
10-06-2023

Office of Construction and Facilities Management

VA U.S. Department of Veterans Affairs

Drawing Title: MECHANICAL SCHEDULES

Approved: Project Director

Phase: 100% CONSTRUCTION + BID DRAWINGS

FULLY SPRINKLERED

Project Title: G.V. (Sonny) Montgomery VAMC EHRM-TASS

Location: 1500 E Woodrow Wilson Ave, Jackson, MS 39216

Issue Date: 10/06/23 | Checked: DGG | Drawn: MB

Project Number: 586-22-703

Building Number: R+E

Drawing Number: M-602

VA FORM 08-6231

CONTROLS SYMBOLS

PT	PRESSURE TRANSMITTER
PDT	PRESSURE DIFFERENTIAL TRANSMITTER
PDS	PRESSURE DIFFERENTIAL SWITCH
PSH	PRESSURE SWITCH HIGH
PSL	PRESSURE SWITCH LOW
PC	PRESSURE CONTROLLER. SEE SEQUENCE OF OPERATION
SD	SMOKE DETECTOR
SPS	STATIC PRESSURE SENSOR
SC	SPEED CONTROLLER. SEE SEQUENCE OF OPERATION
TSL	TEMPERATURE SWITCH, LOW (FREEZESTAT)
TSH	TEMPERATURE SWITCH, HIGH (FREEZESTAT)
TC	TEMPERATURE CONTROLLER. SEE SEQUENCE OF OPERATION
T	ROOM THERMOSTAT/TRANSMITTER - WALL MOUNT
TT	TEMPERATURE TRANSMITTER
TT	TEMPERATURE TRANSMITTER, AVERAGING ELEMENT
ZC	ZONE VALVE OR DAMPER POSITION CONTROLLER
LTCP	LOCAL TEMPERATURE CONTROL PANEL
HVAC	HVAC CONTROL PANEL
VSMC	VARIABLE SPEED MOTOR CONTROLLER
AFMD	AIRFLOW MEASURING DEVICE
	TEMPERATURE SENSING ELEMENT FOR TRANSMITTING TEMPERATURE TO EMCS (PROVIDE 12 INCHES [200mm] MINIMUM LENGTH IN DUCT WHEN SPACE PERMITS.)
A	SENSOR WITH AVERAGING ELEMENT TO TRANSMIT TEMPERATURE TO EMCS
MS	MOTOR STARTER
M	ELECTRIC OPERATED CONTROL DAMPER/OR VALVE

CONTROLS SYMBOLS

AT CO2	CARBON DIOXIDE TRANSMITTER
AT CO	CARBON MONOXIDE TRANSMITTER
AT OC	OCCUPANCY SENSOR
CT	CONDUCTIVITY TRANSMITTER
EPT	ELECTRONIC TO PNEUMATIC TRANSDUCER
ECC	INTEGRATE CONTROL POINT ON REMOTE GRAPHICS WORKSTATION AT ENERGY CONTROL CENTER
FC	FLOW CONTROLLER. SEE SEQUENCE OF OPERATION
FT	FLOW TRANSMITTER
FSH	FLOW SWITCH - HIGH
FSL	FLOW SWITCH - LOW
HS	HAND SWITCH (HAND-OFF-AUTO SWITCH)
IT	CURRENT TRANSMITTER
KC	TIME CLOCK CONTROLLING EQUIPMENT ON A SCHEDULE
KR	LOCAL RECORDING TIME CLOCK (RUNTIME)
LC	LEVEL CONTROLLER
LT	LEVEL TRANSMITTER
M	ROOM HUMIDISTAT (MOISTURE)/TRANSMITTER - WALL MOUNT
MT	MOISTURE (HUMIDITY) TRANSMITTER

NOTE TO TEMPERATURE CONTROL CONTRACTOR:
CONTROL CONTRACTOR SHALL BE RESPONSIBLE FOR PROVIDING THE CORRECT TYPE, SIZES AND QUANTITIES OF CONTROL CABLES, CONTROLLERS, SENSORS, TRANSFORMERS, DEVICES AND PROGRAMMING NECESSARY FOR A FULLY FUNCTIONAL SYSTEM. WHETHER OR NOT SHOWN ON THESE DRAWINGS.

SUPPLY VAV TERMINAL UNIT POINTS LIST

POINT NAME	HARDWARE POINTS AI	AO	BI	BO	SOFTWARE POINTS AV	BV	SCHED	TREND	ALARM	SHOW ON GRAPHIC
DISCHARGE AIR TEMPERATURE	X							X		X
ZONE SETPOINT ADJUST	X									X
AIRFLOW	X							X		X
ZONE TEMPERATURE	X							X		X
HOT WATER REHEAT VALVE		X								X
ZONE DAMPER		X						X		X
ZONE OVERIDE			X					X		X
AIRFLOW SETPOINT					X			X		X
COOLING/HEATING SETPOINT					X			X		X
DISCHARGE AIR TEMPERATURE HEATING LIMIT					X					
HEATING/COOLING MODE						X		X		
SCHEDULE OCCUPANCY							X			
HIGH DISCHARGE AIR TEMPERATURE									X	
HIGH ZONE TEMPERATURE									X	
LOW DISCHARGE AIR TEMPERATURE									X	
LOW ZONE TEMPERATURE									X	

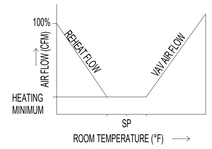

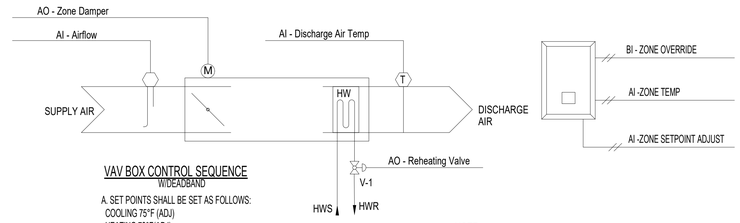

VAV BOX CONTROL SEQUENCE
W/DEADBAND

A. SET POINTS SHALL BE SET AS FOLLOWS:
COOLING 75°F (ADJ)
HEATING 70°F(ADJ)
DEADBAND OF 5° F BETWEEN HEATING AND COOLING SET POINTS WILL BE MAINTAINED.
B. UPON FALL IN SPACE TEMPERATURE THE VAV DAMPER WILL MODULATE TO MINIMUM POSITION.
C. UPON FURTHER DROP IN SPACE TEMPERATURE VALVE V-1 WILL MODULATE TO MAINTAIN SET POINT ± 5° F. THE ADJUSTABLE TOLERANCE OF ± .5° F HAS BEEN SELECTED TO PREVENT VALVE HUNTING.
D. THE REVERSE SHALL OCCUR ON THE RISE IN SPACE TEMPERATURE.

NOTE:
1. PROVIDE POWER SUPPLY TRANSFORMER SERVING LOCAL GROUPS OF AIR TERMINAL UNITS (5 VAV BOXES MAX PER TRANSFORMER.)
2. WHEN VA REMOVES PARTITION WALLS, VA MUST CONTACT MANUFACTURER OF BAS SYSTEM TO HAVE VAV BOXES CONNECTED TO 1 SINGULAR THERMOSTAT TO AVERAGE THE TEMPERATURE OF THE INCREASED AREA TO ENSURE ALL VAV BOXES TO BE WORKING TOGETHER.

1 VARIABLE VOLUME AIR TERMINAL UNIT CONTROL DIAGRAM
NTS

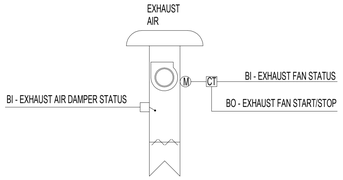

2 EXHAUST AIR CONTROL DIAGRAM (EF-4)
NTS

RUN CONDITIONS - CONTINUOUS:
THE FAN SHALL RUN CONTINUOUSLY.

FAN:
THE FAN SHALL HAVE A USER DEFINABLE (ADJ.) MINIMUM RUNTIME.

EXHAUST AIR DAMPER:
THE EXHAUST AIR DAMPER SHALL OPEN ANYTIME THE UNIT RUNS AND SHALL CLOSE ANYTIME THE UNIT STOPS. THE EXHAUST AIR DAMPER SHALL CLOSE SEC (ADJ.) AFTER THE FAN STOPS.

ALARMS SHALL BE PROVIDED AS FOLLOWS:
- DAMPER FAILURE: COMMANDED OPEN, BUT THE STATUS IS CLOSED.
- DAMPER IN HAND: COMMANDED CLOSED, BUT THE STATUS IS OPEN.

FAN STATUS:
THE CONTROLLER SHALL MONITOR THE FAN STATUS.

ALARMS SHALL BE PROVIDED AS FOLLOWS:
- FAN FAILURE: COMMANDED ON, BUT THE STATUS IS OFF.
- FAN IN HAND: COMMANDED OFF, BUT THE STATUS IS ON.
- FAN RUNTIME EXCEEDED: FAN STATUS RUNTIME EXCEEDS A USER DEFINABLE LIMIT (ADJ.)

EXHAUST FAN POINTS LIST (EF-4)

POINT NAME	HARDWARE POINTS AI	AO	BI	BO	SOFTWARE POINTS AV	BV	SCHED	TREND	ALARM	SHOW ON GRAPHIC
EXHAUST AIR DAMPER STATUS			X							X
FAN STATUS			X							X
EXHAUST AIR DAMPER				X						X
FAN START/STOP				X						X
SCHEDULE							X			
EXHAUST AIR DAMPER FAILURE									X	
EXHAUST AIR DAMPER IN HAND									X	
FAN FAILURE									X	
FAN IN HAND									X	
FAN RUNTIME EXEEDED									X	
VFD START / STOP				X			X	X		X
VFD FAN STATUS			X					X	X	X
VFD FAULT / FAILURE			X			X		X	X	X
VFD HOA STATUS										
							X	X		X

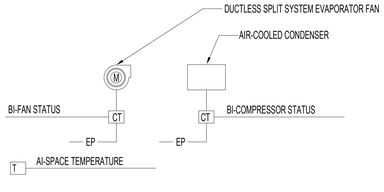

DUCTFREE SPLIT SYSTEM POINTS LIST

POINT NAME	HARDWARE POINTS AI	AO	BI	BO	SOFTWARE POINTS AV	BV	SCHED	TREND	ALARM	SHOW ON GRAPHIC
FAN STATUS			X							X
SPACE TEMPERATURE	X							X	X	X
COMPRESSOR STATUS			X				X		X	X

1. DUCTLESS SPLIT SYSTEMS:
   A. DUCTLESS SPLIT SYSTEMS SHALL HAVE SYSTEM MANUFACTURER'S STANDARD WALL-MOUNTED PROGRAMMABLE CONTROLLER. SYSTEM SHALL OPERATE UNDER ITS BUILT-IN, FACTORY INSTALLED CONTROL SYSTEM TO MAINTAIN ROOM TEMPERATURE SET POINT (72F). AN INDEPENDENT, WALL-MOUNTED TEMPERATURE SENSOR SHALL MONITOR ROOM TEMPERATURE AND SEND AN ALARM TO THE BMS PANEL IF ROOM TEMPERATURE RISES ABOVE 85F (ADJUSTABLE). HIGH TEMPERATURE ALARM SHALL REQUIRE MANUAL RESET. THE BMS SHALL MONITOR COMPRESSOR STATUS.

3 DUCTLESS SPLIT SYSTEM CONTROL DIAGRAM
NTS

VA CONTRACT NO:36C77623C0052

Revisions:	Date:
100% CONSTRUCTION + BID DRAWING	10/06/2023
100% CONSTRUCTION + BID DRAWING	09/28/2023
95% CONSTRUCTION DOCUMENTS	09/01/2023

CONSULTANT

ARCHITECT/ENGINEER OF RECORD
BANCROFT ARCHITECTS + ENGINEERS
3300 Dundee Rd.
Northbrook, IL 60062
T: 847.952.9362
www.bancroft-ae.com

STAMP
LICENSED PROFESSIONAL ENGINEER RAED HAMID 062.065548 OF ILLINOIS
10-06-2023

Office of Construction and Facilities Management
VA U.S. Department of Veterans Affairs

Drawing Title: MECHANICAL CONTROLS
Approved: Project Director

Phase: 100% CONSTRUCTION + BID DRAWINGS
FULLY SPRINKLERED

Project Title: G.V. (Sonny) Montgomery VAMC EHRM-TASS
Location: 1500 E Woodrow Wilson Ave, Jackson, MS 39216
Issue Date: 10/06/23
Checked: DGG
Drawn: MB

Project Number: 586-22-703
Building Number: R+E
Drawing Number: M-701

VA FORM 08-6231

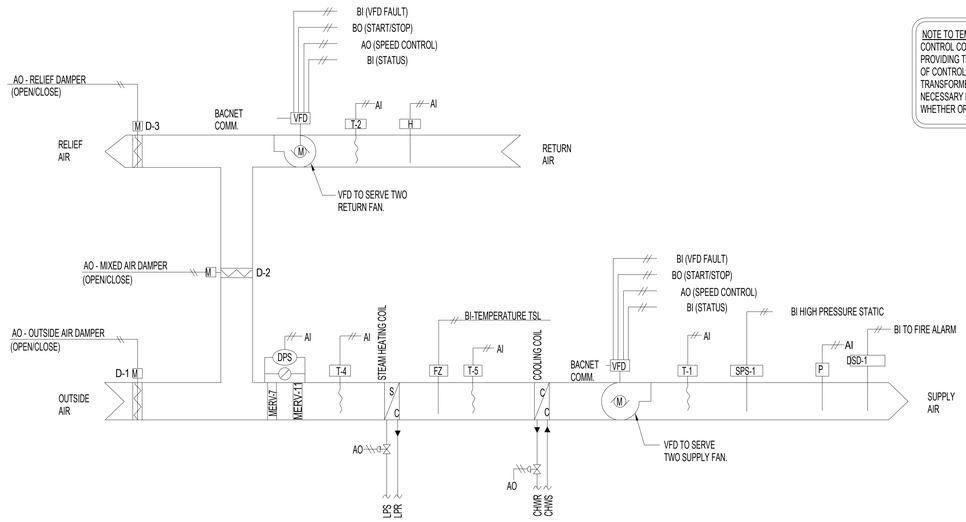

1 VARIABLE AIR VOLUME AIR HANDLING UNIT (AHU-4)
NTS

NOTE TO TEMPERATURE CONTROL CONTRACTOR:
CONTROL CONTRACTOR SHALL BE RESPONSIBLE FOR PROVIDING THE CORRECT TYPE, SIZES AND QUANTITIES OF CONTROL CABLES, CONTROLLERS, SENSORS, TRANSFORMERS, DEVICES AND PROGRAMMING NECESSARY FOR A FULLY FUNCTIONAL SYSTEM. WHETHER OR NOT SHOWN ON THESE DRAWINGS.

AIR HANDLING UNIT POINT LIST (AHU-4)

	HARDWARE POINTS				SOFTWARE POINTS					
POINT NAME	AI	AO	BI	BO	AV	BV	SCHED	TREND	ALARM	SHOW ON GRAPHIC
HEATING TEMPERATURE (T-4)	X							X		X
PREFILTER DIFFERNTIAL PRESSURE	X							X		X
RETURN AIR TEMPERATURE (T-2)	X							X		X
SUPLY DUCT STATIC PRESSURE SENSOR	X							X	X	X
SUPPLY AIR TEMPERATURE (T-1)	X							X		X
COOLING VALVE		X						X		X
PREHEAT GLYCOL HEATING COIL VALVE		X						X		X
OUTSIDE AIR DAMPER (D-1)		X						X		X
MIXED AIR DAMPER (D-2)		X						X		X
RELIEF AIR DAMPER (D-3)		X						X		X
SUPPLY FAN VFD SPEED		X						X		X
RETURN FAN VFD SPEED		X						X		X
SUPPLY FAN STATUS			X					X	X	X
RETURN FAN STATUS			X					X	X	X
SUPPLY FAN START/STOP				X						
RETURN FAN START/STOP				X						
FREEZESTAT (TSL)			X					X	X	X
SUPPLY AIR SMOKE DETECTOR (DSD)			X					X	X	X
OUTSIDE AIRFLOW SETPOINT					X			X		X
PREHEAT MIXED AIR TEMP SETPOINT					X			X		X
SUPPLY AIR STATIC PRESSURE SETPOINT					X			X		X
SUPPLY AIR TEMPERATURE SETPOINT					X			X		X
ALARM										
HIGH MIXED AIR TEMPERATURE									X	
HIGH RETURN AIR TEMPERATURE									X	
HIGH SUPPLY AIR TEMPERATURE									X	
LOW MIXED AIR TEMPERATURE									X	
LOW RETURN AIR TEMPERATURE									X	
LOW SUPPLY AIR TEMPERATURE									X	
PREFILTER CHANGE REQUIRED									X	
RETURN FAN FAILURE									X	
RETURN FAN IN HAND									X	
SUPPLY FAN FAILURE									X	
SUPPLY FAN IN HAND									X	
									X	

RUN CONDITIONS:
THE AIR HANDLING UNIT AND ASSOCIATED TERMINAL UNITS WILL ALWAYS BE IN OCCUPIED MODE.

EMERGENCY SHUTDOWN:
THE UNIT SHALL SHUT DOWN AND GENERATE AN ALARM UPON RECEIVING AN EMERGENCY SHUTDOWN SIGNAL.

HIGH STATIC SHUTDOWN:
THE UNIT SHALL SHUT DOWN AND GENERATE AN ALARM UPON RECEIVING AN HIGH STATIC SHUTDOWN SIGNAL.

SUPPLY AIR SMOKE DETECTION:
THE UNIT SHALL SHUT DOWN AND GENERATE AN ALARM UPON RECEIVING A SUPPLY AND/OR RETURN AIR SMOKE DETECTOR STATUS.

SUPPLY FAN (QTY 2):
BOTH SUPPLY FANS SHALL RUN SIMULTANEOUSLY. THE VARIABLE SPEED SUPPLY FAN ARRAY SYSTEM SHALL RUN ANYTIME THE UNIT IS COMMANDED TO RUN, UNLESS SHUTDOWN ON SAFETIES. TO PREVENT SHORT CYCLING, THE SUPPLY FANS SHALL HAVE A USER DEFINABLE (ADJ.) MINIMUM RUNTIME. ENERGIZING THE SUPPLY FAN WILL INITIATE THE VARIABLE FREQUENCY DRIVE (VFD) DAMPER CONTROL START SEQUENCE. THE VFD WILL INITIATE A COMMAND TO OPEN THE SUPPLY AND RETURN ISOLATION DAMPERS. ONCE THE DAMPERS END SWITCH CONFIRMS THE ISOLATION DAMPERS ARE OPEN, THE VFD WILL START THE SUPPLY FAN. THE IS SEQUENCE WILL TAKE PLACE WHETHER THE VFD IS ENABLED REMOTELY OR PUT IN BYPASS LOCALLY.

ALARMS SHALL BE PROVIDED AS FOLLOWS:
- SUPPLY FAN FAILURE: COMMANDED ON, BUT THE STATUS IS OFF.
- SUPPLY FAN IN HAND: COMMANDED OFF, BUT THE STATUS IS ON.
- SUPPLY FAN RUNTIME EXCEEDED: STATUS RUNTIME EXCEEDS A USER DEFINABLE LIMIT (ADJ.).

ALARMS SHALL BE PROVIDED AS FOLLOWS:
- HIGH SUPPLY AIR STATIC PRESSURE: IF THE SUPPLY AIR STATIC PRESSURE IS 25% (ADJ.) GREATER THAN SETPOINT.
- LOW SUPPLY AIR STATIC PRESSURE: IF THE SUPPLY AIR STATIC PRESSURE IS 25% (ADJ.) LESS THAN SETPOINT.
- SUPPLY FAN VFD FAULT.

RETURN FAN CONTROL (QTY 2):
THE RETURN FAN SYSTEM SHALL RUN WHENEVER THE SUPPLY FAN RUNS. BOTH FANS SHALL RUN SIMULTANEOUSLY AND THE RETURN FANS SPEED WILL BE MODULATED BASED ON SUPPLY FLOW VOLUME MATCHING. SUPPLY AIRFLOW MINUS RETURN AIRFLOW SHALL EQUAL THE DIFFERENTIAL AIRFLOW. THE RETURN FAN VFD WILL BE MODULATED TO MAINTAIN THE DIFFERENTIAL SETPOINTS.

ALARMS SHALL BE PROVIDED AS FOLLOWS:
- RETURN FAN FAILURE: COMMANDED ON, BUT THE STATUS IS OFF.
- RETURN FAN IN HAND: COMMANDED OFF, BUT THE STATUS IS ON.
- RETURN FAN RUNTIME EXCEEDED: STATUS RUNTIME EXCEEDS A USER DEFINABLE LIMIT (ADJ.).
- RETURN FAN VFD FAULT.

ECONOMIZER CONTROL:
ECONOMIZER CONTROL IS BASED ON DRY BULB OUTDOOR AIR TEMPERATURE AND WILL BE AVAILABLE WHENEVER THE AHU IS IN OCCUPIED MODE AND COOLING IS NOT AVAILABLE FROM THE CENTRAL PLANT AND WHEN THE OUTSIDE AIR TEMPERATURE (O.A.T) IS BELOW THE ECONOMIZER SWITCHOVER SETPOINT. WHEN ECONOMIZER CONTROL IS AVAILABLE, THE OUTDOOR/EXHAUST AND RETURN AIR DAMPERS WILL BE MODULATED BETWEEN THE MINIMUM OUTDOOR AIR DAMPER POSITION AND FULLY OPEN IN ORDER TO MAINTAIN THE MIXED AIR SETPOINT. WHEN THE O.A.T IS ABOVE THE ECONOMIZER SWITCHOVER SETPOINT, THE OUTDOOR/EXHAUST AND RETURN AIR DAMPERS WILL REMAIN AT THE MINIMUM POSITION. THE ECONOMIZER WILL ACT AS THE INITIAL STAGE OF COOLING, WORKING IN SEQUENCE WITH THE COOLING COIL.

PREHEATING COIL VALVE:
WHEN STEAM IS AVAILABLE, AS DETERMINED BY A GLOBAL SYSTEM ENABLED POINT, THE PRE-HEAT COIL CONTROL VALVE WILL MODULATE TO MAINTAIN THE PRE-HEAT COIL LEAVING AIR TEMPERATURE AT THE PRE-HEAT TEMPERATURE SETPOINT.

THE PREHEATING SHALL BE ENABLED WHENEVER:

- OUTSIDE AIR TEMPERATURE IS LESS THAN 60°F (ADJ.).
- THE PRE-HEAT COIL ENTERING AIR TEMPERATURE AS SENSED BY T-4 IS LESS THAN 52 DEG. F.
- COOLING COIL CONTROL VALVE IS OFF.
- AND THE SUPPLY FAN STATUS IS ON.

COOLING COIL VALVE CONTROL:
WHEN CHILLED WATER IS AVAILABLE, AS DETERMINED BY A GLOBAL SYSTEM ENABLE POINT, THE COOLING COIL CONTROL VALVE WILL MODULATE TO MAINTAIN THE CURRENT DISCHARGE AIR SETPOINT AS SENSED BY DISCHARGE AIR TEMPERATURE AND THE PRE-HEAT COIL CONTROL VALVE SHALL REMAIN CLOSED. WHEN CHILLED WATER IS NOT AVAILABLE THE COOLING WATER CONTROL VALVE WILL REMAIN CLOSED, UNLESS THE COOLING ECONOMIZER MODE IS ENABLED AS DETERMINED BY A GLOBAL SYSTEM ENABLED POINT. WHEN COOLING ECONOMIZER IS ENABLED, THE COOLING CONTROL VALVE WILL BE COMMANDED TO 100% OPEN.
WHEN THE UNIT IS SHUTDOWN, THE COOLING COIL WILL BE OFF.
UPON LOSS OF AIRFLOW, THE COOLING COIL WILL BE OFF.

THE COOLING SHALL BE ENABLED WHENEVER:
- OUTSIDE AIR TEMPERATURE IS GREATER THAN 60°F (ADJ.).
- AND THE SUPPLY FAN STATUS IS ON.
- AND THE HEATING (IF PRESENT) IS NOT ACTIVE.

ALARMS SHALL BE PROVIDED AS FOLLOWS:
- HIGH SUPPLY AIR TEMP: IF THE SUPPLY AIR TEMPERATURE IS 5°F (ADJ.) GREATER THAN SETPOINT.

PREFILTER DIFFERENTIAL PRESSURE MONITOR:
THE CONTROLLER SHALL MONITOR THE DIFFERENTIAL PRESSURE ACROSS THE PREFILTER.

ALARMS SHALL BE PROVIDED AS FOLLOWS:
- PREFILTER CHANGE REQUIRED: PREFILTER DIFFERENTIAL PRESSURE EXCEEDS A USER DEFINABLE LIMIT (ADJ.).

ALARMS SHALL BE PROVIDED AS FOLLOWS:
FINAL FILTER CHANGE REQUIRED: FINAL FILTER DIFFERENTIAL PRESSURE EXCEEDS A USER DEFINABLE LIMIT (ADJ.).

SUPPLY AIR TEMPERATURE:
THE CONTROLLER SHALL MONITOR THE SUPPLY AIR TEMPERATURE.

ALARMS SHALL BE PROVIDED AS FOLLOWS:
- HIGH SUPPLY AIR TEMP: IF THE SUPPLY AIR TEMPERATURE IS GREATER THAN °F (ADJ.).
- LOW SUPPLY AIR TEMP: IF THE SUPPLY AIR TEMPERATURE IS LESS THAN °F (ADJ.).

VA CONTRACT NO:36C77623C0052

100% CONSTRUCTION + BID DRAWING	10/06/2023
100% CONSTRUCTION + BID DRAWING	09/28/2023
95% CONSTRUCTION DOCUMENTS	09/01/2023
Revisions:	Date:

CONSULTANT

ARCHITECT/ENGINEER OF RECORD
BANCROFT ARCHITECTS + ENGINEERS
3300 Dundee Rd.
Northbrook, IL 60062
T: 847.952.9362
www.bancroft-ae.com

STAMP
LICENSED PROFESSIONAL ENGINEER RAED HAMID 062.065548 OF ILLINOIS
10-06-2023

Office of Construction and Facilities Management
VA U.S. Department of Veterans Affairs

Drawing Title: MECHANICAL CONTROLS
Approved: Project Director
Phase: 100% CONSTRUCTION + BID DRAWINGS
FULLY SPRINKLERED
Project Title: G.V. (Sonny) Montgomery VAMC EHRM-TASS
Location: 1500 E Woodrow Wilson Ave, Jackson, MS 39216
Issue Date: 10/06/23
Checked: DGG
Drawn: MB
Project Number: 586-22-703
Building Number: R+E
Drawing Number: M-702

VA FORM 08-6231

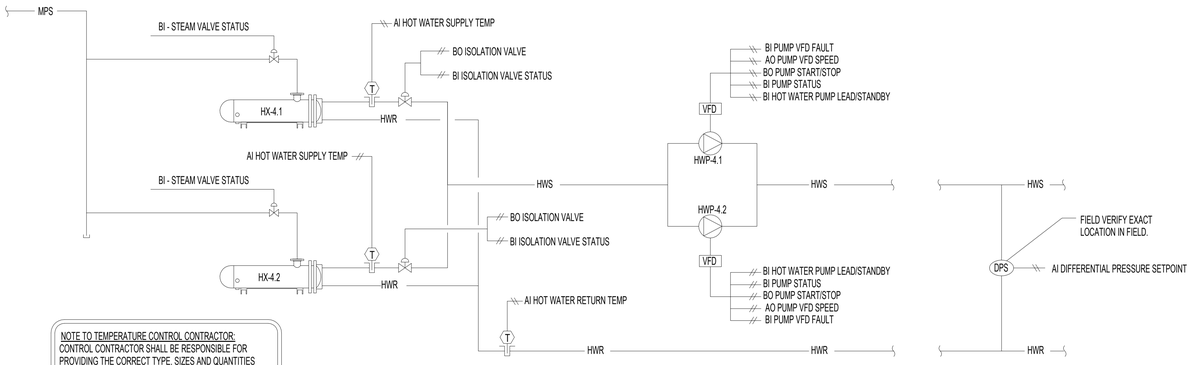

NOTE TO TEMPERATURE CONTROL CONTRACTOR:
CONTROL CONTRACTOR SHALL BE RESPONSIBLE FOR PROVIDING THE CORRECT TYPE, SIZES AND QUANTITIES OF CONTROL CABLES, CONTROLLERS, SENSORS, TRANSFORMERS, DEVICES AND PROGRAMMING NECESSARY FOR A FULLY FUNCTIONAL SYSTEM. WHETHER OR NOT SHOWN ON THESE DRAWINGS.

1 REHEAT HOT WATER SYSTEM CONTROL DIAGRAM
NTS

SEQUENCE OF OPERATION

HOT WATER HEAT EXCHANGER

GENERAL
TWO 100% CAPACITY HEAT EXCHANGERS AND TWO 100% CAPACITY HEATING WATER PUMPS ARE PROVIDED IN THE SYSTEM. (ONE HEAT EXCHANGER AND ONE PUMP ARE REDUNDANT).

HEAT EXCHANGER SYSTEM RUN CONDITIONS:
THE HYDRONIC HEATING SYSTEM SHALL BE OPERABLE YEAR ROUND 24 HOURS PER DAY, 7 DAYS PER WEEK. THE BAS SHALL OPEN THE ISOLATION VALVE ON THE HWS LINE TO ALLOW FLOW THROUGH THE HEAT EXCHANGER.

TO PREVENT SHORT CYCLING, THE HEAT EXCHANGER SHALL RUN FOR AND BE OFF FOR MINIMUM ADJUSTABLE TIMES (BOTH USER DEFINABLE).

HOT WATER PUMP LEAD/STANDBY OPERATION:
THE TWO HOT WATER PUMPS SHALL OPERATE IN A LEAD/STANDBY FASHION.

- THE LEAD PUMP SHALL RUN FIRST.
- ON FAILURE OF THE LEAD PUMP, THE STANDBY PUMP SHALL RUN AND THE LEAD PUMP SHALL TURN OFF.

THE DESIGNATED LEAD PUMP SHALL ROTATE UPON ONE OF THE FOLLOWING CONDITIONS (USER SELECTABLE):

- MANUALLY THROUGH A SOFTWARE SWITCH
- IF PUMP RUNTIME (ADJ.) IS EXCEEDED
- DAILY
- WEEKLY
- MONTHLY

ALARMS SHALL BE PROVIDED AS FOLLOWS:

- HOT WATER PUMP 1
- FAILURE: COMMANDED ON, BUT THE STATUS IS OFF.
- RUNNING IN HAND: COMMANDED OFF, BUT THE STATUS IS ON.
- RUNTIME EXCEEDED: STATUS RUNTIME EXCEEDS A USER DEFINABLE LIMIT.
- HOT WATER PUMP 2
- FAILURE: COMMANDED ON, BUT THE STATUS IS OFF.
- RUNNING IN HAND: COMMANDED OFF, BUT THE STATUS IS ON.
- RUNTIME EXCEEDED: STATUS RUNTIME EXCEEDS A USER DEFINABLE LIMIT.

HOT WATER DIFFERENTIAL PRESSURE CONTROL:
THE CONTROLLER SHALL MEASURE HOT WATER DIFFERENTIAL PRESSURE AND MODULATE THE HOT WATER PUMP VFD TO MAINTAIN ITS HOT WATER DIFFERENTIAL PRESSURE SETPOINT. ALL SETPOINTS SHALL BE FIELD ADJUSTED DURING THE COMMISSIONING PERIOD TO MEET THE REQUIREMENTS OF ACTUAL FIELD CONDITIONS.

THE CONTROLLER SHALL MODULATE HOT WATER PUMP SPEEDS TO MAINTAIN A HOT WATER DIFFERENTIAL PRESSURE (ADJ.). THE VFDS MINIMUM SPEED SHALL NOT DROP BELOW 20% (ADJ.).

ALARMS SHALL BE PROVIDED AS FOLLOWS:
HIGH HOT WATER DIFFERENTIAL PRESSURE: IF 25% (ADJ.) GREATER THAN SETPOINT.

- LOW HOT WATER DIFFERENTIAL PRESSURE: IF 25% (ADJ.) LESS THAN SETPOINT.

HOT WATER SUPPLY TEMPERATURE SETPOINT RESET:
THE HOT WATER SUPPLY TEMPERATURE SETPOINT SHALL RESET BASED ON OUTSIDE AIR TEMPERATURE.

AS OUTSIDE AIR TEMPERATURE RISES FROM 0°F (ADJ.) TO 70°F (ADJ.) THE HOT WATER SUPPLY TEMPERATURE SETPOINT SHALL RESET DOWNWARDS FROM 180°F (ADJ.) TO 110°F (ADJ.).

ALARMS SHALL BE PROVIDED AS FOLLOWS:

- HIGH HOT WATER SUPPLY TEMP: IF GREATER THAN 200°F (ADJ.).
- LOW HOT WATER SUPPLY TEMP: IF LESS THAN 100°F (ADJ.).

HEAT EXCHANGER STEAM VALVES - HOT WATER CONTROL:
UPON PROVING PUMP FLOW, THE TWO-WAY MODULATING STEAM CONTROL SHALL OPEN AND SHALL MODULATE TO MAINTAIN THE HOT WATER SUPPLY TEMPERATURE AS SENSED BY A SENSOR LOCATED IN THE HOT WATER SUPPLY PIPING OF THE CONVERTER.

THE CONTROLLER SHALL MEASURE THE HOT WATER SUPPLY TEMPERATURE AND MODULATE THE STEAM VALVE TO MAINTAIN ITS SETPOINT.

THE STEAM VALVE SHALL BE ENABLED WHENEVER:

- THE HEAT EXCHANGER IS CALLED TO RUN.
- AND HOT WATER SUPPLY TEMPERATURE IS BELOW SETPOINT.

THE STEAM VALVE SHALL CLOSE WHENEVER THE HOT WATER SUPPLY TEMPERATURE RISES FROM 180°F TO 200°F (ADJ.).

HYDRONIC HW SYSTEM CONTROL POINTS

	HARDWARE POINTS				SOFTWARE POINTS					
POINT NAME	AI	AO	BI	BO	AV	BV	SCHED	TREND	ALARM	SHOW ON GRAPHIC
PUMP HWP-4.1 STATUS			X					X		X
PUMP HWP-4.2 STATUS			X					X		X
PUMP HWP-4.1 START/STOP				X				X		X
PUMP HWP-4.2 START/STOP				X				X		X
PUMP HWP-4.1 LEAD/STANDBY			X							X
PUMP HWP-4.2 LEAD/STANDBY			X							X
HOT WATER SUPPLY TEMPERATURE	X							X		X
HOT WATER RETURN TEMPERATURE	X							X		X
PUMP HWP-4.1 VFD FAULT			X					X		X
PUMP HWP-4.1 VFD SPEED		X						X		X
PUMP HWP-4.2 VFD FAULT			X					X		X
PUMP HWP-4.2 VFD SPEED		X						X		X
HOT WATER FLOW CONTROL VALVE STATUS			X					X		X
HOT WATER DIFFERENTIAL PRESSURE SETPOINT	X				X			X		X
STEAM CONTROL VALVE STATUS			X					X		X
HOT WATER SUPPLY VALVE OPEN/CLOSE				X				X		X
ALARM										
PUMP HWP-4.1 FAILURE									X	
PUMP HWP-4.2 FAILURE									X	
PUMP HWP-4.1 VFD FAULT									X	
PUMP HWP-4.2 VFD FAULT									X	
HIGH SUPPLY WATER TEMPERATURE									X	
LOW SUPPLY WATER TEMPERATURE									X	
HOT WATER FLOW CONTROL VALVE STATUS									X	
HIGH HOT WATER DIFFERENTIAL PRESSURE									X	
LOW HOT WATER DIFFERENTIAL PRESSURE									X	

VA CONTRACT NO:36C77623C0052

Revisions:	Date:
100% CONSTRUCTION + BID DRAWING	10/06/2023
100% CONSTRUCTION + BID DRAWING	09/28/2023
95% CONSTRUCTION DOCUMENTS	09/01/2023

CONSULTANT

ARCHITECT/ENGINEER OF RECORD
BANCROFT ARCHITECTS + ENGINEERS
3300 Dundee Rd.
Northbrook, IL 60062
T: 847.952.9362
www.bancroft-ae.com

STAMP
LICENSED PROFESSIONAL ENGINEER RAED HAMID 062.065548 OF ILLINOIS
10-06-2023

Office of Construction and Facilities Management
VA U.S. Department of Veterans Affairs

Drawing Title: MECHANICAL CONTROLS
Approved: Project Director
Phase: 100% CONSTRUCTION + BID DRAWINGS
FULLY SPRINKLERED
Project Title: G.V. (Sonny) Montgomery VAMC EHRM-TASS
Location: 1500 E Woodrow Wilson Ave, Jackson, MS 39216
Issue Date: 10/06/23
Checked: DGG
Drawn: MB
Project Number: 586-22-703
Building Number: R+E
Drawing Number: M-703

VA FORM 08-6231

MOUNTING HEIGHTS FOR ELECTRICAL DEVICES

DEVICE	MOUNTING HEIGHTS
LIGHT SWITCHES, WALL MOUNTED OCCUPANCY SENSORS	48" TO CENTERLINE OF BOX. EXCEPTION: 44" MAXIMUM TO TOP ABOVE COUNTERS WHICH ARE 20"-25"D.
DISCONNECT SWITCHES, MOTOR STARTERS, MOTOR PUSH BUTTON STATIONS	60" TO CENTERLINE.
WALL MOUNTED EXIT SIGNS	90" TO CENTERLINE OF SIGN OR CENTERED IN WALL AREA BETWEEN TOP OF DOOR AND CEILING.
CEILING MOUNTED EXIT SIGNS	80" TO BOTTOM FIXTURE.
RECEPTACLES	18" TO CENTERLINE OF BOX. EXCEPTION: 44" MAXIMUM TO TOP ABOVE COUNTERS WHICH ARE 20"-25"D, HORIZONTALLY MOUNTED RECEPTACLES SHALL HAVE GROUND PIN TO THE RIGHT
SPECIAL OUTLETS OR RECEPTACLES	18" TO CENTERLINE OF BOX OR AS NOTED ON DRAWINGS. EXCEPTION: 44" MAXIMUM TO TOP ABOVE COUNTERS WHICH ARE 20"-25"D.
PLUGMOLD OR WIREMOLD	AS NOTED ON DRAWINGS. EXCEPTION: 44" MAXIMUM TO TOP ABOVE COUNTERS WHICH ARE 20"-25"D.
CLOCK OUTLETS	12" CEILING TO CENTERLINE OR 7'-0" TO CENTERLINE IF CEILING IS OVER 8'-0".
DATA/COMMUNICATION OR TELEPHONE OUTLETS	18" TO CENTERLINE OF BOX.
TELEPHONE OUTLETS - WALL TYPE	54" TO DIAL CENTER (NON-ACCESSIBLE). 48" TO HIGHEST OPERABLE PART (ACCESSIBLE).
PAY TYPE TELEPHONE OUTLETS	48" MAXIMUM TO COIN SLOT.
FIRE ALARM MANUAL PULL STATIONS	48" TO CENTERLINE OF BOX - NOT MORE THAN 5'-0" FROM EXIT.
FIRE ALARM AUDIBLE ONLY DEVICE	NOT LESS THAN 90" TO TOP OR 6" BELOW CEILING, WHICH EVER IS HIGHER.
FIRE ALARM VISUAL ONLY DEVICE OR A COMBINATION AUDIBLE AND VISUAL DEVICE	80" TO BOTTOM OF DEVICE OR NOT MORE THAN 96" TO TOP.
WALL MOUNTED REMOTE INDICATOR LIGHT	80" TO CENTERLINE OF DEVICE OR 6" BELOW CEILING, WHICHEVER IS LOWER.
AREA OF REFUGE TELEPHONE	SAME AS TELEPHONE - ACCESSIBLE.
CALL FOR AID SWITCH WITH PULL CHAIN TO FLOOR	48" TO CENTERLINE OF BOX MINIMUM (TOILETS). 66" TO CENTERLINE OF BOX MAXIMUM (SHOWERS - LOCATED OUT OF SPRAY AREA).
CARD READER	48" TO CENTERLINE OF BOX (SIDE OR FORWARD ACCESS).
INTERCOM STATION	54" TO HIGHEST OPERABLE PART (SIDE ACCESS). 48" HIGHEST OPERABLE PART (FORWARD ACCESS).
SOUND SYSTEM VOLUME CONTROL	54" TO HIGHEST OPERABLE PART (SIDE ACCESS). 48" HIGHEST OPERABLE PART (FORWARD ACCESS).
MICROPHONE OUTLETS	16" TO BOTTOM OF BOX.
THERMOSTATS	48" TO CENTERLINE OF BOX (SIDE OR FORWARD ACCESS).
TEMPERATURE/HUMIDITY SENSORS	60" TO CENTER LINE OF BOX.

NOTES:

1. ALL DIMENSIONS ARE CONSIDERED FROM FINISHED FLOOR AND, UNLESS NOTED OTHERWISE, SHALL NOT VARY. RAISED FLOORS SHALL BE CONSIDERED FINISHED FLOOR.
2. ALL DIMENSIONS SHALL BE COORDINATED WITH ARCHITECTURAL DETAILS AND MAY BE ADJUSTED TO CONFORM WITH ARCHITECTURAL REQUIREMENTS AS LONG AS NO CODE RESTRICTION IS VIOLATED.
3. OUTLETS INSTALLED LOWER THAN 15" AFF (FORWARD REACH) AND 9" AFF (SIDE REACH) ARE IN VIOLATION OF ADA.

SPECIAL NOTES:

1. EXIT SIGNS SHALL NOT BE INSTALLED IN A MANNER THAT THE SIGN WILL BLOCK FIRE ALARM VISUAL DEVICES.
2. FOR LIGHTING FIXTURES MOUNTING HEIGHTS SEE SCHEDULE AND DRAWINGS.

WIRE/CONDUIT SIZING TABLE

FOR 120V-20A BRANCH CIRCUITS ONLY (UNLESS NOTED OTHERWISE) - 2#12, #12G, 3/4"C (UPSIZE FOR V-DROP AS PER TABLE BELOW)

IF DISTANCE (A+B) IN FEET IS: (SEE DIAGRAM AT RIGHT)

USE COPPER WIRE IN METALLIC CONDUIT, AWG SIZE AS FOLLOWS ON ENTIRE CIRCUIT AND SIZE CONDUIT ACCORDINGLY.

	WIRE SIZE	CONDUIT SIZE
0' TO 100'	#12 AWG (MIN.)	3/4"
100' TO 175'	#10 AWG	3/4"
175' TO 300'	#8 AWG	3/4"
300' TO 450'	#6 AWG (MAX.)	1"

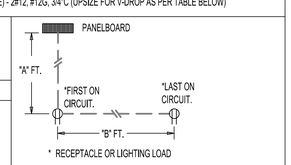

FOR 277V-20A BRANCH CIRCUITS ONLY (UNLESS NOTED OTHERWISE) - 2#12, #12G, 3/4"C (UPSIZE FOR V-DROP AS PER TABLE BELOW)

IF DISTANCE (A+B) IN FEET IS: (SEE DIAGRAM AT RIGHT)

USE COPPER WIRE IN METALLIC CONDUIT, AWG SIZE AS FOLLOWS ON ENTIRE CIRCUIT AND SIZE CONDUIT ACCORDINGLY.

	WIRE SIZE	CONDUIT SIZE
0' TO 250'	#12 AWG (MIN.)	3/4"
250' TO 400'	#10 AWG	3/4"
400' TO 700'	#8 AWG	3/4"
700' TO 1000'	#6 AWG (MAX.)	1"

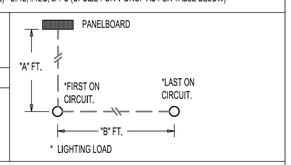

NOTES:

1. TABLES ARE BASED ON EVENLY DISTRIBUTED LOAD ALLOWING A 3% VOLTAGE DROP AT LAST OUTLET/LIGHT.
2. 480V MOTOR BRANCH CIRCUIT CONDUCTORS SHALL BE #12 AWG IN 3/4" C UNLESS OTHERWISE NOTED.
3. SIZE OF CONDUCTORS ARE BASED UPON EACH MOTOR BEING FED WITH SEPARATE CONDUIT. IF CONDUCTORS FOR TWO MOTORS (MAX.) ARE TO BE COMBINED IN ONE CONDUIT, INCREASE THE SIZE OF CONDUCTORS AND CONDUITS PER NATIONAL ELECTRICAL CODE (NEC), TO COMPENSATE FOR CONDUCTOR DE-RATING.
4. PROVIDE DEDICATED NEUTRAL FOR EACH CIRCUIT.
5. PROVIDE EQUIPMENT GROUND CONDUCTOR FOR EACH CIRCUIT, SIZE TO COMPLY WITH NEC REQUIREMENTS.

ELECTRICAL GENERAL NOTES

1. SEE ALL PROJECT GENERAL NOTES AND OTHER REQUIREMENTS THE LIFE SAFETY AND INFECTION CONTROL REQUIREMENTS LOCATED WITHIN GENERAL DRAWINGS SECTION. COMPLY WITH ALL REQUIREMENT AS THEY ARE A DIRECT PART OF THIS SECTION AND AS IF THEY WERE DIRECTLY INCLUDED AND PROVIDED BELOW.

2. BASIS OF DESIGN PROTOCOLS:

   DESIGN IS BASED ON LISTED MANUFACTURER MENTIONED ON ALL ELECTRICAL AND ALL SPECIAL SYSTEM DRAWINGS INCLUDING BUT NOT LIMITED TO VARIOUS ELECTRICAL EQUIPMENTS, DEVICES, LIGHT FIXTURES, LIGHTING CONTROLS, AND ALL SPECIAL SYSTEM DEVICES. CONTRACTOR SHALL BE RESPONSIBLE TO ENSURE THAT ALL EQUAL PRODUCTS SHALL MEETS OR EXCEEDS THE DESIGN INTENT, PERFORMANCE, OUTLINE DIMENSION, WEIGHT ETC. EQUAL PRODUCT SHOP SUBMITTALS SHALL BE REJECTED UNLESS CONTRACTOR PROVIDES WRITTEN STATEMENT INDICATING IT MATCHES 100% PERFORMANCE SPECS AND ALL ABOVE CRITERIA. EQUAL PRODUCT SHOP SUBMITTAL NOT MEETING ABOVE CRITERIA SHALL BE REVIEWED AND/OR SELECTED EQUAL PRODUCTS REQUIRES RE-DESIGN THAT WILL BE AT THE COST TO THE CONTRACTOR INCLUDING DELAY OF PROJECT DUE TO THIS PROCESS. ALTERNATIVELY EQUAL PRODUCTS ALONG WITH LETTER INDICATING CONTRACTOR IS RESPONSIBLE FOR MEETING DESIGN INTENT/CRITERIA SHALL BE SUBMITTED AND APPROVED FROM VA/COR BEFORE BID AND VA/COR APPROVAL PROOF SHALL BE SUBMITTED ALONG WITH SHOP SUBMITTAL FOR REVIEW.

   EQUIVALENCY SUBSTITUTIONS: THE "BASIS OF DESIGN (BOD) PROTOCOLS" ARE TO BE FOLLOWED FOR ALL EQUIPMENT, MATERIALS AND ASSEMBLIES SPECIFIED AND DETAILED THROUGHOUT ALL DRAWINGS AND SPECIFICATION SECTIONS, WHETHER THE BOD DESIGNATE IS SPECIFICALLY REFERENCED THEREIN OR NOT. SEE THE GENERAL DRAWINGS SECTION FOR THE FULL BOD EQUIVALENCY SUBSTITUTION REQUIREMENTS AND PROTOCOLS TO BE FOLLOWED.

3. CODES:

   THE WORK SHALL COMPLY WITH ALL APPLICABLE, MUNICIPAL, STATE, NATIONAL CODES, AND ALL VA APPLICABLE DESIGN MANUALS STANDARDS REQUIREMENTS, WHERE THE CONSTRUCTION DOCUMENTS INDICATE MORE RESTRICTIVE REQUIREMENTS THE CONSTRUCTION DOCUMENTS SHALL GOVERN. HOWEVER, THE CONSTRUCTION DOCUMENTS SHALL NOT BE INTERPRETED AS AUTHORITY TO VIOLATE ANY CODE OR REGULATION.

   ALL WORK, MATERIAL, AND EQUIPMENT SHALL COMPLY WITH ALL REQUIREMENTS OF THE LATEST EDITIONS AND INTERIM AMENDMENTS OF THE NATIONAL ELECTRICAL CODE (N.E.C.), NATIONAL ELECTRICAL SAFETY CODE, OSHA, AND ALL APPLICABLE FEDERAL, STATE, AND LOCAL LAWS AND ORDINANCES. ALL ELECTRICAL EQUIPMENT PROVIDED UNDER THIS CONTRACT SHALL BE NEW (EXCEPT WHERE OTHERWISE NOTED) AND SHALL SHALL BEAR THE MARK OF NATIONALLY RECOGNIZED TESTING LABORATORY, WHEN APPLICABLE. ALL EQUIPMENT OF THE SAME TYPE AND CAPACITY SHALL BE BY THE SAME MANUFACTURER.

4. DRAWINGS AND SPECIFICATIONS:

   THE CONTRACTOR SHALL BE RESPONSIBLE FOR READING AND COMPLYING WITH BOTH THE DRAWINGS AND SPECIFICATIONS. IN THE EVENT OF A CONFLICT OR INCONSISTENCY BETWEEN THE DRAWINGS, NOTES, SPECIFICATIONS, OR CODES, THE REFERENCE WHICH PROVIDES THE MORE COMPLETE OR HIGHER STANDARD SHALL PREVAIL UNLESS OTHERWISE CLARIFIED BY OWNER.

   CONTRACTOR SHALL REVIEW ENTIRE SET OF CONTRACT DOCUMENTS: INCLUDING BUT NOT NECESSARILY LIMITED TO ALL ARCHITECTURAL, ALL STRUCTURAL, ALL MECHANICAL, ALL ELECTRICAL, ALL PLUMBING, AND ENTIRE PROJECT MANUAL. CONTRACTOR SHALL ACKNOWLEDGE AND INCLUDE IN THE SCOPE OF WORK (CONTRACT) ALL CONDITIONS PERTINENT TO THE COMPLETION OF THE ELECTRICAL WORK. CONTRACTOR SHALL FULLY COORDINATE ELECTRICAL WORK WITH THE INSTALLATION OF WORK BY ALL OTHER TRADES AND MAKE NECESSARY FIELD ADJUSTMENTS AS REQUIRED TO ACCOMMODATE THE ELECTRICAL INSTALLATION. ALL OF THE ABOVE SHALL BE INCLUDED IN THE SCOPE OF WORK AT NO ADDITIONAL COST TO THE VA.

5. INTERPRETATION OF THE DOCUMENTS:

   CAREFULLY COMPARE THE DRAWINGS AND SPECIFICATIONS, CHECKING REQUIREMENTS AND CONDITIONS UNDER WHICH THIS INSTALLATION IS TO BE MADE. FOR CLARIFICATION BETWEEN VARIOUS DRAWINGS, BETWEEN DRAWINGS OR SPECIFICATION, OR BETWEEN SECTIONS OF THE SPECIFICATION, THE MATTER SHALL BE REFERRED TO THE VA/COR FOR CLARIFICATION AND APPROVAL BEFORE ANY WORK IS EXECUTED. THE CONTRACTOR SHALL STATE IN THEIR PROPOSAL ANY EXCEPTIONS NECESSARY TO MAKE THIS A COMPLETE, READY TO USE INSTALLATION, IF NOT STATED IN THEIR BID, IT WILL NOT BE CONSIDERED EXTRA.

   ALL WORK SHALL BE DONE IN ACCORDANCE WITH THE CONTRACT DOCUMENTS, IN A NEAT AND WORKABLE MANNER CONSISTENT WITH RECOGNIZED GOOD PRACTICE, AND SHALL BE SUBJECT TO THE APPROVAL OF THE VA/CO.

   ANY CHANGES TO THE CONTRACT REQUIREMENTS MUST BE APPROVED PRIOR TO CONSTRUCTION. THE CONTRACTOR SHALL KEEP UP-TO-DATE AS-BUILT DRAWINGS, ON-SITE, AVAILABLE FOR INSPECTION AT ANY TIME OF THE EXACT NATURE OF WORK, INCLUDING ALLOWABLE DEVIATIONS FROM THE CONTRACT DRAWINGS, FOR THE PURPOSE OF RECORD DOCUMENTS.

6. ELECTRICAL DRAWINGS

   THE ELECTRICAL DRAWINGS ARE DIAGRAMMATIC AND SHALL NOT BE SCALED. THE CONTRACTOR SHALL DETERMINE THE EXACT LOCATION OF ALL DOORS, WALLS, FURNITURE, EQUIPMENT, ETC.. THE LOCATION OF RACEWAY SYSTEM COMPONENTS IS SCHEMATIC. THE EXACT LOCATION OF RACEWAY SYSTEM COMPONENTS SHALL BE DETERMINED BY THE CONTRACTOR IN THE FIELD. THE CONTRACTOR SHALL CONFIRM THE DIMENSIONS OF THE ACTUAL EQUIPMENT TO BE SUPPLIED FOR THIS PROJECT, VERIFY CLEARANCES AND ROUGH-INS, AND OBTAIN ALL APPROVALS PRIOR TO STARTING WORK.

7. SITE EXAMINATION

   BEFORE SUBMITTING A BID, THE CONTRACTOR SHALL VISIT THE SITE, EXAMINE THE PREMISES, AND MAKE A THOROUGH SURVEY OF THE EXISTING CONDITIONS. THIS VISIT SHALL ONLY BE ALLOWED AS PER THE VA SCHEDULED WALK THROUGH. THE SUBMISSION OF A BID WILL BE CONSTRUED AS EVIDENCE THAT SUCH A VISIT HAS BEEN MADE. NO CONSIDERATION OR ALLOWANCE WILL BE GRANTED FOR FAILURE TO VISIT THE SITE OR FOR LATER CLAIMS FOR LABOR, EQUIPMENT, MATERIALS REQUIRED, OR FOR DIFFICULTIES ENCOUNTERED WHICH COULD HAVE BEEN FORESEEN HAD SUCH VISIT BEEN MADE.

   CONTRACTOR SHALL CAREFULLY EXAMINE THE DRAWINGS AND SPECIFICATIONS, VISIT THE SITE OF THE WORK, AND FULLY INFORM THEM SELF AS TO ALL CONDITIONS AND MATTERS THAT CAN, IN ANY WAY, AFFECT THE WORK OR THE COST THEREOF. SHOULD THIS CONTRACTOR FIND DISCREPANCIES IN, OR OMISSIONS FROM, THE DRAWINGS, SPECIFICATIONS OR OTHER DOCUMENTS OR BE IN DOUBT AS TO THEIR MEANING, NOTIFY THE VA/COR AT ONCE, IN WRITING, OF ANY DISCREPANCIES BETWEEN EXISTING CONDITIONS AND NEW WORK, OR BETWEEN ELECTRICAL WORK AND THE WORK OF OTHER TRADES. OBTAIN CLARIFICATION(S) PRIOR TO SUBMITTING ANY BID. LACK OF SUCH NOTIFICATION SHALL BE CONSTRUED TO INDICATE NO DISCREPANCIES OR CONFLICTS EXIST. ADDITIONAL COMPENSATION WILL NOT BE GRANTED AFTER AWARD OF CONTRACT FOR ANY WORK REQUIRED TO COMPLY WITH THESE REQUIREMENTS.

8. COORDINATION WITH OTHER TRADES:

   THE ELECTRICAL CONTRACTOR SHALL OBTAIN A COMPLETE SET OF GENERAL, ARCHITECTURAL AND ENGINEERING DOCUMENTS AND COORDINATE WITH MECHANICAL, PLUMBING, ARCHITECTURAL, AND OTHER TRADES FOR EXACT DIMENSIONS, CLEARANCES, ROUGH-IN LOCATIONS, AND OTHER ADDITIONAL SCOPES OF WORK THAT MAY NOT BE SHOWN ON THE ELECTRICAL PLANS. THE ELECTRICAL CONTRACTOR SHALL BE RESPONSIBLE FOR ALL 120 VOLT (AND HIGHER) AC POWER TO OTHER TRADES EQUIPMENT AND HARDWARE. THIS SHALL INCLUDE, BUT NOT BE LIMITED TO, CONTROLS, FIRE AND SECURITY SYSTEMS, MOTORIZED DOORS, DAMPERS, LIFTS, AND OTHER SYSTEMS, UNLESS SPECIFICALLY NOTED OTHERWISE ON THE ELECTRICAL PLANS, THE ELECTRICAL CONTRACTOR SHALL FURNISH ALL SAFETY DISCONNECT SWITCHES TO MECHANICAL EQUIPMENT UNLESS OTHERWISE NOTED..

   THE CONTRACTOR SHALL CHECK ALL ARCHITECTURAL, STRUCTURAL, AND MECHANICAL TRADES WORK FOR POSSIBLE INTERFERENCE CAUSED BY CONDITIONS IN THE FIELD, BEFORE THE BID IS MADE. NO ALLOWANCE SHALL SUBSEQUENTLY BE MADE TO THE CONTRACTOR BY REASON OF HIS FAILURE TO HAVE MADE SUCH EXAMINATIONS OR OF ANY ERROR OF THEIR PART.

9. THE ELECTRICAL CONTRACTOR IS: RESPONSIBLE FOR SCHEDULING DELIVERY, RECEIVING, UNLOADING, UNCRATING, STORING SETTING IN PLACE, AND PROTECTING FROM DAMAGE, VANDALISM, THEFT OR WEATHER DURING CONSTRUCTION FOR ALL NEW EQUIPMENT FURNISHED BY THE ELECTRICAL CONTRACTOR.

   CONTRACTOR SHALL PAY ALL PERMIT FEES, PLAN REVIEW FEES, LICENSE FEES, INSPECTIONS AND TAXES APPLICABLE TO THIS DIVISION IF NECESSARY. (FEDERAL GOVERNMENT IS NOT SUBJECT TO LOCAL PERMITS OR FEE FOR THE PROJECT).

10. FIRE STOPPING:

    ALL PENETRATIONS IN WALL, FLOOR OR CEILINGS SHALL BE SUITABLY CLOSED UP AND SEALED WITH AN INTUMESCENT FIRE STOPPING COMPOUND LISTED IN THE MOST RECENT FACTORY MUTUAL RESEARCH CORPORATION (FMRC) APPROVAL GUIDE. WHEN NEW CABLES/CONDUITS PENETRATE EXISTING FIRE RATED WALL, PENETRATIONS SHALL BE SEALED TO MATCH EXISTING RATING TO ENSURE IT RETAIN EXISTING CONDITIONS. THE BOD FOR FIRE STOPPING PRODUCTS SHALL BE AS MANUFACTURED BY THE 3M CO.

11. PAINTING:

    ALL NEWLY INSTALLED EXPOSED PIPING SHALL BE PAINTED TO MATCH THE ADJACENT WALL OR CEILING SURFACE UNLESS THE REQUIRED COLOR CODING IS SPECIFIED.

12. VA FURNISHED EQUIPMENT:

    EQUIPMENT THAT WILL BE FURNISHED BY THE VA WILL BE INDICATED ON A SCHEDULE OR BE INCLUDED IN SPECIFIC NOTES OR SPECIFICATIONS. THE CONTRACTOR SHALL COORDINATE WITH THE VA/COR FOR DELIVERY SCHEDULES. THE CONTRACTOR IS TO ASSUME THAT ON SITE STORAGE MAY NOT BE AVAILABLE WHEN COORDINATING DELIVERY OF EQUIPMENT. THE CONTRACTOR, IN COORDINATION WITH THE VA/COR, WILL INSPECT THE DELIVERY FOR ACCURACY AND SHIPMENT DAMAGE AND ACCEPTING THE EQUIPMENT. THE CONTRACTOR SHALL BE RESPONSIBLE TO STORE, PROTECT, AND ULTIMATELY INSTALL THE EQUIPMENT.

13. ELECTRICAL SERVICE DISRUPTIONS:

    ANY WORK INVOLVING A TASK WHICH EXPOSES ACTIVE BUS SHALL BE PERFORMED AFTER HOURS (11:00PM TO 5:00AM). THIS RESTRICTION INCLUDES REMOVING THE COVER FROM ANY PANEL BOARD, SWITCHBOARD, M.C.C. ETC., ALL WORK WHICH EXPOSES ACTIVE BUS REQUIRES A WRITTEN NOTIFICATION TO THE VA/COR WHICH WILL OUTLINE THE METHOD OF PROCEDURE FOR THE WORK. THE CONTRACTOR SHALL PROVIDE A MINIMUM OF 6 WEEKS NOTICE TO THE VA/COR BEFORE WORKING ON ANY ENERGIZED ELECTRICAL SYSTEM. ALL POWER DISRUPTION SHALL OCCUR AT TIMES AND OF DURATIONS ACCEPTABLE TO THE VA/COR.

14. EQUIPMENT:

    ALL MATERIALS AND EQUIPMENT USED IN THIS INSTALLATION SHALL BE NEW, AND HAVE THE APPROPRIATE UL LISTING AND LABEL.

    THE CONTRACTOR SHALL FURNISH ALL LABOR, MATERIAL, TOOLS, EQUIPMENT SERVICES, AND ACCESSORIES FOR COMPLETE INSTALLATION OF ALL ELECTRICAL WORK AS NOTED, ITEMS OMITTED FROM EITHER THE SPECIFICATIONS OR THE DRAWINGS, BUT SHOWN OR DESCRIBED IN ONE OR THE OTHER, AND ITEMS NECESSARY TO MAKE THE ELECTRICAL SYSTEM COMPLETE AND WORKABLE SHALL FORM A PART OF THE WORK.

15. MISCELLANEOUS SUPPORTING MEMBERS:

    ALL ANGLES CHANNELS, AND OTHER MISCELLANEOUS STEEL, BOLTS, RODS, ETC.. REQUIRED TO SUPPORT LIGHT FIXTURE, CONDUIT, RACEWAY, LADDER TRAY, OR OTHER ELECTRICAL EQUIPMENT OR DEVICES SHALL BE FURNISHED AND INSTALLED BY THE CONTRACTOR.

    ANY MENTION OF A SPECIFIC VOLTAGE ON THE ELECTRICAL DRAWINGS SHALL NOT RELIEVE THE ELECTRICAL CONTRACTOR OF THE RESPONSIBILITY TO VERIFY THE VOLTAGE PRIOR TO PURCHASING OR ROUGH-IN WORK.

16. DISTRIBUTION PANELS AND PANELS BOARDS:

    ALL DISTRIBUTION PANELS AND PANEL BOARDS SHALL BE PROVIDED WITH TYPEWRITTEN DIRECTORIES. BALANCE ALL LOADS ON PANELBOARDS WITHIN 10% OF EACH OTHER. SEE PANEL SCHEDULES ON THE DRAWINGS AND SPECIFICATION FOR COMPLETE IDENTIFICATION AND LABELING REQUIREMENTS. ALL DISTRIBUTION PANELS AND PANEL BOARDS SHALL BE LABELED ON THE PANEL CABINET WITH THE PANEL NAME AND THE POWER SOURCE FEEDING THE PANEL AS PER THE ELECTRICAL ONE LINE. ALL PANELS AND PANEL BOARDS SHALL BE PROVIDED WITH HINGED DOOR WITH LOCK AND KEY.

17. SAFETY:

    CONTRACTOR SHALL TAKE ALL STEPS NECESSARY TO ENSURE THE SAFETY OF THE VA'S EMPLOYEES, BUILDING EMPLOYEES AND GUESTS, AS WELL AS THEIR OWN FORCES, BY ADEQUATELY PROVIDING APPROPRIATE PPE AND PROTECTING ANY EXPOSED LIVE CONDUCTORS, OR DEVICES THROUGHOUT THE COURSE OF THIS WORK.

18. EQUIPMENT CONNECTIONS:

    PROVIDE FINAL CONNECTIONS FOR ALL EQUIPMENT FURNISHED UNDER OTHER DIVISIONS AND FOR ALL VA FURNISHED EQUIPMENT. PROVIDE A FLEXIBLE LIQUID TIGHT CONNECTION TO ALL VIBRATION PRODUCING EQUIPMENT.

19. TEMPORARY LIGHTING, POWER, FIRE, AND SAFETY:

    PROVIDE TEMPORARY LIGHTING AND POWER AS REQUIRED IN AREAS UNDERGOING WORK DURING CONSTRUCTION. FURNISH AND INSTALL ONE OSHA APPROVED PIGTAIL SOCKET WITH 150-WATT LAMP FOR EVERY 500 SQUARE FEET OF FLOOR SPACE AND A MINIMUM 1 PER ROOM. THE TEMPORARY LIGHTING SHALL BE LEFT IN PLACE UNTIL PERMANENT LIGHTING IS COMPLETELY OPERATIONAL.

    FURNISH AND INSTALL POWER OUTLETS TO A TOTAL OF ONE FOR EVERY 2000 SQUARE FEET OR PART THEREOF OF FLOOR AREA. THESE SHALL BE 15 AMP, SINGLE PHASE RECEPTACLES FOR EITHER 110 OR 220 VOLTS AS DIRECTED BY THE GENERAL/PRIME CONTRACTOR. COORDINATE FOR ADDITIONAL TEMPORARY POWER REQUIREMENTS WITH OTHER TRADES AND PROVIDE AN ADEQUATE INSTALLATION.

    COMPLY WITH NFPA 241 FOR SAFEGUARDING DURING CONSTRUCTION AND ALTERATION OPERATIONS. IN ADDITION, ANY OPENINGS IN FIRE RATED SEPARATIONS BETWEEN OCCUPIED AND UNOCCUPIED (OR OPERATIONAL AND NON-OPERATIONAL) AREAS SHALL BE SEALED AT THE END OF EACH WORK DAY WITH AN APPROPRIATE FIRE RATED ENCLOSURE OR SEALANT, DO NOT COMPROMISE EXISTING SECURITY OR FIRE ALARM SYSTEMS SERVING THE OCCUPIED OR OPERATIONAL AREAS.

    DURING CONSTRUCTION THE CONTRACTOR SHALL AT ALL TIMES MAINTAIN ELECTRICAL UTILITIES OF THE BUILDING WITHOUT INTERRUPTION. SHOULD IT BE NECESSARY TO INTERRUPT ANY ELECTRICAL SERVICE OR UTILITY, THE CONTRACTOR SHALL SECURE PERMISSION IN WRITING FROM THE VA/COR FOR SUCH INTERRUPTION AT LEAST 6 WEEKS IN ADVANCE. ANY INTERRUPTION SHALL BE MADE WITH THE MINIMUM AMOUNT OF INCONVENIENCE TO THE VA AND ANY SHUT-DOWN TIME SHALL HAVE TO BE ON A PREMIUM TIME/AFTER HOURS BASIS AND SUCH TIME TO BE INCLUDED IN THE CONTRACTOR'S BID.

    CONTRACTOR SHALL PROVIDE ALL NECESSARY TEMPORARY LIGHTING AND POWER FOR ALL TRADES DURING CONSTRUCTION AND REMOVE IT AT COMPLETION OF WORK. ENSURE ALL TEMPORARY ITEMS ARE REMOVED PRIOR TO INSTALLING WALL FINISHES.

    CONTRACTOR SHALL ESTABLISH SAFE WORKING PROCEDURES FOR THE PROTECTION OF THE WORKMEN IN ALL PHASES OF WORK, COMPLYING WITH THE APPLICABLE PROVISIONS OF ALL CITY, STATE, AND FEDERAL SAFETY LAWS (OSHA), AND AS RECOMMENDED IN THE "MANUAL OF ACCIDENT PREVENTION IN CONSTRUCTION" AS ISSUED BY THE ASSOCIATION OF GENERAL CONTRACTORS OF AMERICA, INC., 20TH AND E. STREETS, N.W. WASHINGTON, D.C.

20. POWER COORDINATION:

    THE CONTRACTOR SHALL PERFORM ALL COORDINATION AND SCHEDULING OF LOCAL POWER OUTAGES REQUIRED WITH THE VA/COR. ALL NEEDED POWER OUTAGES TO BE SCHEDULED WITH THE VA/COR SIX WEEKS IN ADVANCE.

21. CABLING:

    BRANCH CIRCUITS TO RECEPTACLES, LIGHTING AND MISC. SMALL LOADS (15 OR 20 AMP CIRCUITS), UNLESS SPECIFICALLY NOTED OTHERWISE, SHALL BE 2 - #12, 1 - #12 GRD., 3/4" C. A SEPARATE NEUTRAL SHALL BE RUN FOR EACH CIRCUIT. SEE WIRE SIZING TABLE ON THIS SHEET.

    ALL WIRE SIZE #8 AWG AND LARGER SHALL BE STRANDED AND SOLID FOR #10AND SMALLER.

    EACH BRANCH CIRCUIT HOMERUN SHALL HAVE NO MORE THAN THREE CIRCUITS. EACH BRANCH CIRCUIT HOMERUN SHALL HAVE A SEPARATE GREEN INSULATED EQUIPMENT GROUNDING CONDUCTOR. ALL CONDUCTORS SHALL BE COPPER TYPE THWN / XHHW.

    CABLE JACKET COLOR FOR VARIOUS SYSTEM SHALL BE AS FOLLOW:
    VOICE (VOIP) - WHITE
    3 DATA - YELLOW/GREEN/GRAY
    CLINICAL WIRELESS (OIT) - DARK GREEN
    VIDEO SURVEILLANCE - VIOLET
    NURSE CALL - BLUE
    FIRE ALARM - RED

22. CABLING SIZES:

    BRANCH CIRCUIT CABLE SIZING SHALL BE ADJUSTED BASED ON THE VALUES INDICATED IN THE WIRE SIZING TABLE PER THIS SHEET.

23. SPECIAL LUG REQUIREMENTS:

    ANY CABLE WHICH TERMINATES DIRECTLY ON TO A BUS BAR SHALL BE 2 BOLT LONG BARREL TYPE WITH INSPECTION HOLES PRODUCED WITH NON FLASHING TYPE DYES WITH THE BOD AS MANUFACTURED BY THOMAS AND BETTS, OR EQUIVALENT MINIMUM 10 TONS OF COMPRESSION, HEX CRIMP. THE USE OF HEAT SHRINK TUBING IS EXPLICITLY FORBIDDEN.

24. RACEWAYS:

    ALL WIRE SHALL BE INSTALLED IN THIN WALL (E.M.T.) CONDUIT UNLESS OTHERWISE NOTED. MINIMUM SIZE SHALL BE 3/4" EXCEPT FOR DROPS FOR DEVICES, SWITCH LEGS, TEMPERATURE CONTROL CONDUITS, WHERE INDICATED OR AS CALLED FOR ON DRAWINGS. ALL THINWALL FITTINGS SHALL BE OF THE STEEL COMPRESSION GLAND TYPE.

    ALL UNDERFLOOR, UNDERGROUND OR EXPOSED-TO-WEATHER CONDUIT SHALL BE HEAVYWALL GALVANIZED RIGID STEEL. (G.R.S.), MINIMUM 3/4". ALL BURIED CONDUITS AND 2" AND ABOVE EXPOSED-TO-WEATHER CONDUIT SHALL BE PVC COATED HEAVYWALL GALVANIZED RIGID STEEL (G.R.S).

    ALL CONDUIT FASTENERS, STRAPS, SUPPORTS ETC. MUST BE "BOLT-ON" GALVANIZED STEEL ON EXPOSED CONSTRUCTION AND IN WET AREAS. SNAP-ON BLACK METAL "CADDY" CLIPS IN METAL PARTITION WALLS AND ABOVE SUSPENDED CEILINGS WILL BE PERMITTED. ALL FASTENERS, STRAPS, CLIPS, ETC. SHALL BE UL LISTED FOR THEIR USE.

    SUPPORT CONDUIT WITH P1000 UNISTRUT AND 3/8" THREADED ROD 8'-0" O.C. MAX.

    PROVIDE MYERS HUBS FOR ALL CONDUIT TO ENCLOSURE CONNECTIONS.

    ALL CONDUIT RACEWAYS SHALL BE CONCEALED IN OR WITHIN: WALLS, CEILING CAVITY, ROOF CONSTRUCTION (WHERE APPROVED), SLAB, GRADE, ETC. UNLESS OTHERWISE NOTED. ANY RACEWAY THAT IS TO BE ROUTED EXPOSED SHALL BE APPROVED BY THE VA/COR AND SUCCESSFULLY REVIEWED BY THE ARCHITECT/ENGR. PRIOR TO INSTALLATION. ALL CONDUIT SHALL BE ROUTED PARALLEL OR PERPENDICULAR TO WALLS AND STRUCTURAL MEMBERS WITH 90° BENDS WHERE REQUIRED AND SHALL BE RACKED. PULL AND JUNCTION BOXES SHALL BE HELD TO A MINIMUM. CONTRACTOR SHALL INSTALL ALL WORK IN NEAT & INDUSTRY RECOGNIZED MANNER OF BEST PRACTICES.

    GROUND ALL CONDUITS, MOTORS, AND EXPOSED NON-CURRENT CARRYING METAL PARTS OF ELECTRICAL EQUIPMENT IN ACCORDANCE WITH ALL PROVISIONS WITH THE LATEST EDITION OF THE NATIONAL ELECTRICAL CODE ART. 250. VA SPECIFICATION SECTION 26 05 26 "GROUNDING AND BONDING ELECTRICAL SYSTEM".

    CONTRACTOR SHALL PROVIDE PULL BOXES, JUNCTION BOXES, SPLICE BOXES AND FITTINGS WHERE NECESSARY OR REQUIRED BY THE NEC.

    CONDUIT ROUTING SHOWN DIAGRAMMATIC AND BASED ON CONDITIONS AT THE TIME THE FIELD SURVEY. CONTRACTOR SHALL FIELD VERIFY EXACT ROUTING AS FIELD CONDITION DICTATES AT THE TIME OF CONSTRUCTION. PROVIDE PULL BOXES SIZED AS PER NFPA-70 LATEST EDITION. THERE SHALL NOT BE MORE THAN THE EQUIVALENT OF FOUR QUARTER BENDS (360° TOTAL) BETWEEN PULL POINTS.

    ALL ELECTRICAL CONDUITS SHALL BE A MINIMUM OF 3/4" UNLESS NOTED OTHERWISE. MULTI-GANG BACKBOXES FOR DIFFERENT VOLTAGES AND TYPES OF EMERGENCY AND NORMAL BRANCH WIRING DEVICES SHALL HAVE DIVIDERS BETWEEN DEVICES.

    PROVIDE JUNCTION BOX AND CONDUIT COLOR FOR VARIOUS SYSTEMS AS PER FOLLOWING COLOR SCHEME (VERIFY FACILITY COLOR

ELECTRICAL SYMBOLS - DIAGRAM

- INCOMING LINE
- GROUND
- DELTA CONNECTION
- WYE CONNECTION
- SURGE AND LIGHTNING ARRESTER
- POTHEAD
- STRESS CONE
- TRANSFORMER
- CONTACTOR
- EARTH GROUND
- PB — PULL BOX
- NORMALLY CLOSED RELAY CONTACT
- NORMALLY OPEN RELAY CONTACT
- FUSE WITH RATING
- MOLDED CASE CIRCUIT BREAKER
- LOW-VOLTAGE DRAWOUT AIR CIRCUIT BREAKER
- O.C.B. — MEDIUM-VOLTAGE OIL CIRCUIT BREAKER
- MEDIUM-VOLTAGE DRAWOUT AIR CIRCUIT BREAKER
- SWITCH AND FUSE UNIT
- FUSIBLE SWITCH
- FUSED DRAWOUT POTENTIAL TRANSFORMER
- CONTROL OR POTENTIAL TRANSFORMER
- CURRENT TRANSFORMER
- X — CABLE AND CONDUIT TAG SEE SCHEDULE
- X/Y — EQUIPMENT TAG SEE EQUIPMENT SCHEDULE
- ST — SHUNT TRIP
- A — AMMETER
- AS — AMMETER SELECTOR SWITCH
- V — VOLTMETER
- VS — VOLTMETER SELECTOR SWITCH
- M — UTILITY METER
- CM — OWNER METER
- KWH — KILOWATT HOUR METER
- TVSS — TRANSIENT VOLTAGE SURGE SUPPRESSOR
- GF — GROUND FAULT

ELECTRICAL SYMBOL - HVAC POWER PLAN

- 2KW 1/8HP — FP 1 — CP — FAN POWERED BOX
- UH 1 — CP 1/4 — UNIT HEATER (GAS OR HOT WATER TYPE)
- 10KW 1/8HP — EUH 1 — CP 1/8 — UNIT HEATER (ELECTRIC COIL)
- VAV 1 — CP — VAV BOX
- FCU XX — CCT. XX — 30A/1P — CONDENSATE PUMP — UNIT HEATER

ELECTRICAL SYMBOL - POWER PLAN

- MOTOR, SINGLE-PHASE
- MOTOR, THREE-PHASE
- T — TRANSFORMER, PLAN
- WYE CONNECTION
- EARTH GROUND
- J — POWER JUNCTION BOX
- A/V — DOUBLE GANG DEEP AUDIO/VISUAL JUNCTION BOX
- C C — LADDER CABLE TRAY
- HOMERUN TO PANELBOARDS. 4#10 + 1#12 GROUND IN 3/4" CONDUIT
- PB — PULL BOX
- W W — WIREWAY
- REGULAR POWER
- —S—S—S— LIFE SAFETY POWER
- —C—C—C— CRITICAL POWER
- 208Y / 120 V PANELBOARD
- DISTRIBUTION SWITCHBOARD EQUIPMENT
- RECEPTACLE, DUPLEX
- RECEPTACLE, DUPLEX MOUNTED AT 44"
- RECEPTACLE, DUPLEX ON CRITICAL POWER
- GFCI — RECEPTACLE, DUPLEX WITH GROUND FAULT CIRCUIT INTERRUPTER
- GFCI — RECEPTACLE, DUPLEX WITH GROUND FAULT CIRCUIT INTERRUPTER MOUNTED AT 44"
- RECEPTACLE, QUADRAPLEX
- RECEPTACLE, QUADRAPLEX MOUNTED AT 44"
- RECEPTACLE, QUADRAPLEX ON CRITICAL POWER
- FLOOR RECEPTACLE, DUPLEX
- FLOOR RECEPTACLE, DUPLEX ON CRITICAL POWER
- FLOOR RECEPTACLE, QUADRAPLEX
- FLOOR RECEPTACLE, QUADRAPLEX ON CRITICAL POWER
- CEILING MOUNTED RECEPTACLE
- CEILING MOUNTED RECEPTACLE ON CRITICAL POWER
- L21-20R (UON) TWIST LOCK RECEPTACLE ON NORMAL POWER, 208V, FOUR-POLE, THREE-PHASE GROUNDED. CEILING MOUNTED
- L21-20R (UON) TWIST LOCK RECEPTACLE ON CRITICAL POWER, 208V, FOUR-POLE, THREE-PHASE GROUNDED. CEILING MOUNTED
- ELECTRICAL STRIP MOLD (OUTLETS ON 2'-0" CENTERS OR AS DESIGNATED ON DRAWINGS), MTD 3'-6" AFF OR AS INDICATED.
- PP — AUTOMATIC DOOR OPERATOR PUSH PLATE
- TC — TIME CLOCK
- CONDUIT STUBBED DOWN
- CONDUIT STUBBED UP
- FLEXIBLE CONDUIT
- POINT OF CONNECTION BETWEEN NEW AND EXISTING WORK
- LIMIT OF DEMOLITION
- J — JUNCTION BOX WITH DISCONNECT SWITCH AND FLEXIBLE CONDUIT CONNECTION
- J — EQUIPMENT CONNECTION
- EMERGENCY POWER OFF PUSHBUTTON
- BELL
- B — BUZZER
- DOCK DOOR POSITION INDICATOR LIGHT
- T — THERMOSTAT, WALL MOUNTED w/PULL CORD
- H — HUMIDISTAT, WALL MOUNTED

MOTORS AND CONTROLS

- XX — SINGLE PHASE MOTOR (HP AS INDICATED)
- XX — THREE PHASE (HP AS INDICATED)
- 30A/20A — DISCONNECT SWITCH, FUSED (SWITCH/FUSE RATING)
- 30A — DISCONNECT SWITCH, UNFUSED (SWITCH RATING)
- STARTER, COMBINATION WITH DISCONNECT SWITCH
- STARTER OR MOTOR CONTROLLER
- VFD — VARIABLE FREQUENCY DRIVE

ELECTRICAL SYMBOLS - LIGHTING PLAN

- $2 — SWITCH. U.O.N. 1P, 20A
  - BLANK = SINGLE POLE
  - 4 = FOUR-WAY
  - DM= DIMMER
  - LV= LOW VOLTAGE
  - WP=WEATHER PROOF
  - T= THERMAL OVERLOAD PROTECTION
  - 3 = THREE-WAY
  - K = KEY OPERATED
  - P = WITH PILOT LIGHT
  - TM = TIMER OPERATED
  - X = EXPLOSION PROOF
  - OS= OCCUPANCY SENSOR
- OS — SWITCH, OCCUPANCY SENSOR REFER TO FIXTURE SCHEDULE FOR TYPE
- PC — SWITCH, EXTERIOR PHOTO CELL FOR CONTROL OF EXTERIOR LIGHTING
- L PS — SWITCH, LAMP HOLDER POLE
- LIGHT FIXTURE RECESSED ROUND CEILING MOUNTED DOWNLIGHT
- LIGHT FIXTURE RECESSED SQUARE CEILING MOUNTED DOWNLIGHT
- LIGHT FIXTURE, RECESSED LED, 2'x4'
- LIGHT FIXTURE, RECESSED LED 1'x4'
- LIGHT FIXTURE, RECESSED LED, 2'x2'
- S — LIGHT FIXTURE, LED, 2'x4' LETTER INDICATES MOUNTING TYPE i.e. LETTER "S" INDICATES SURFACE MOUNTED.
- S — LIGHT FIXTURE, LED, 1'x4' LETTER INDICATES MOUNTING TYPE i.e. LETTER "S" INDICATES SURFACE MOUNTED.
- S — LIGHT FIXTURE, LED, 2'x2' LETTER INDICATES MOUNTING TYPE i.e. LETTER "S" INDICATES SURFACE MOUNTED.
- LIGHT FIXTURE, LED CRITICAL POWER
- LIGHT FIXTURE, LED LIFE SAFETY POWER
- J — LIGHT TRACK WITH HEADS AS SHOWN
- LIGHT FIXTURE, STRIP/INDUSTRIAL LED; LETTER INDICATES TYPE.
- LIGHTING, UNDERCABINET LIGHT/COVE LIGHT
- EMERGENCY BATTERY BACK-UP EGRESS LIGHT
- DOUBLE FACED CEILING OR WALL MOUNTED EXIT SIGN. ARROW INDICATES DIRECTION
- SINGLE FACED CEILING OR WALL MOUNTED EXIT SIGN. ARROW INDICATES DIRECTION
- LIGHT POLE, ONE MAST ARM, ONE LUMINAIRE
- LIGHT POLE, TWO MAST ARMS, TWO LUMINAIRES
- LIGHT POLE, POST TOP MOUNT LUMINAIRE
- LIGHT POLE, ONE LUMINAIRE
- LIGHT POLE, TWO LUMINAIRES
- LIGHTING WALL PACK - EXTERIOR BUILDING
- LIGHTING LANDSCAPE WALL
- LIGHT FIXTURE, BOLLARD, ROUND
- LIGHT FIXTURE, BOLLARD, SQAURE
- LIGHT FIXTURE, DIRECTIONAL

ELECTRICAL SYMBOLS - COMM. / DATA PLAN

- 3-GANG COMPARTMENT BOX IN FLOOR FOR TELEPHONE, DATA & RECEPTACLE.
- THREE PORT TELEPHONE DATA OUTLET - MOUNTED 18" AFF UNLESS OTHERWISE NOTED.
- FOUR PORT TELEPHONE/DATA OUTLET - MOUNTED 18" AFF UNLESS OTHERWISE NOTED. CABLE AND JACK COLOR AS FOLLOW VOICE / VoIP - WHITE, GREEN - DATA, YELLOW - DATA, GRAY - DATA
- FLOOR MOUNTED FOUR PORT TELEPHONE/DATA OUTLET
- TELEPHONE OUTLET - WALL MOUNTED
- GETWELL NETWORK DATA OUTLET
- CEILING MOUNTED DATA OUTLET
- WAP — WIRELESS ACCESS POINT
- S PA — SPEAKER FOR PUBLIC ANNOUNCEMENT
- TV TV — HDMI OUTLET - CEILING/WALL
- TV TV — COAXIAL OUTLET - CEILING/WALL
- TV TV — TELEVISION ANTENNA SYSTEM OUTLET - CEILING/WALL
- TV — TV OUTLET - +84" A.F.F. OTHERWISE NOTED

FIRE ALARM SYMBOLS

- F SD — STANDARD, CEILING MOUNTED SMOKE DETECTOR
- F SSD — SOUNDER BASE, CEILING MOUNTED SMOKE DETECTOR
- F HD — RATE-OF-RISE STD, CEILING MOUNTED HEAT DETECTOR
- 135 F HD — FIXED TEMP (135°), CEILING MOUNTED HEAT DETECTOR
- DUCT SMOKE DETECTOR W/REMOTE TEST STATION WP INDICATES WEATHERPROOF HOUSING FOR BOTH
- P — MANUAL PULL STATION WP-WEATHERPROOF HOUSING
- F HS — CEILING MOUNTED HORN/STROBE (15cd UON)
- F ST — CEILING MOUNTED STROBE (15cd UON)
- F SP — CEILING MOUNTED FIRE ALARM SPEAKER
- F SPS — CEILING MOUNTED FIRE ALARM SPEAKER/STROBE (15cd UON)
- F HS — WALL MOUNTED HORN/STROBE (15cd UON)
- F ST — WALL MOUNTED STROBE (15cd UON)
- F SP — WALL MOUNTED FIRE ALARM SPEAKER
- F SPS — WALL MOUNTED FIRE ALARM SPEAKER/STROBE (15cd UON)
- CHIME
- —FA— FIRE ALARM LINE = FA
- DH — ELECTROMAGNETIC TYPE DOOR HOLDER OUTLET
- TS — TEMPER SWITCH
- FS — FLOW SWITCH
- PS — PRESSURE SWITCH
- LS — LEVEL SWITCH
- VTS — VALVE TAMPER SWITCH
- VSS — VALVE SUPERVISORY SWITCH
- FACP — FIRE ALARM CONTROL PANEL
- MM — MONITOR MODULE
- CM — CONTROL MODULE
- FIRE FIGHTERS TELEPHONE JACK
- RTS/I — REMOTE TEST SWITCH W/INDICATOR
- Z — F.A. ZONE ADDRESSABLE MODULE
- I — F.A. INDIVIDUAL ADDRESSABLE MODULE
- F.A. DOOR HOLDER
- F.A. DOOR CLOSER
- FR — FIRE ALARM SHUT DOWN RELAY

ELECTRONIC SAFETY AND SECURITY SYMBOLS

- CR — WALL MOUNTED CARD READER
- DC — DOOR CONTACT (SN-CSD80-W)
- ES — ELECTRIC STRIKE (DS160I)
- ML — MAG LOCK
- REX — REQUEST TO EXIT PUSH BUTTON
- CR/K — WALL MOUNTED CARD READER WITH KEYPAD
- ACP — ACCESS CONTROL PANEL
- ACP — ACCESS CONTROL PANEL (LNL--AL400ULX)
- ACPS — ACCESS CONTROL POWER SULLPY (AL600ULACMCB)
- KP — KEYPAD LOCK
- AIP — AIPHONE
- DC — DOOR CONTACT/DOOR POSITION SWITCH
- RX — REQUEST TO EXIT MOTION
- ES — DOOR LOCKING MECHANISM/ELECT STRIKE
- ML — DOOR LOCKING MECHANISM/MAG LOCK
- P A — SECURITY / DURESS-ALARM BUTTON MOUNTED 3" ABOVE COUNTER TOP / COUNTER TOP BACK SPLAH.
- C — CEILING MOUNTED SECURITY CAMERA
- C — WALL MOUNTED SECURITY CAMERA
- ROOF POLE MOUNTED SECURITY CAMERA
- CCP — CAMERA CONTROL PANEL
- RTLS — REAL TIME LOCATING SYSTEM
- QTS — CENTRAX EQUIPMENT TRACKING SYSTEM
- MID — MOTION INTRUSION DETECTOR
- GB — GLASS BREAK SENSOR

ELECTRICAL ABBREVIATIONS

1PH	SINGLE-PHASE
1P	SINGLE POLE
2/C	TWO-CONDUCTOR
3/C	THREE-CONDUCTOR
3PH	THREE-PHASE
4/C	FOUR-CONDUCTOR
4W	FOUR-WIRE
A/C UNIT	AIR CONDITIONING UNIT
A/E	ARCHITECT/ENGINEER
AAP	ALARM ANNUNCIATOR PANEL
AC	ALTERNATING CURRENT OR ARMORED CABLE
ACC	ACCESSIBLE
ADDL	ADDITIONAL
ADJ	ADJACENT, ADJOINING
ADO	AUTOMATIC DOOR OPENER
AF	AMPERE FRAME OR AMP FUSE
AFC	ABOVE FINISHED COUNTER, AUTOMATIC FREQUENCY CONTROL, OR AVAILABLE FAULT CURRENT
AFF	ABOVE FINISHED FLOOR
AFG	ABOVE FINISHED GRADE
AH	AMPERE HOUR
AHJ	AUTHORITY HAVING JURISDICTION
AIC	AMPERE INTERRUPTING CAPACITY
ALT	ALTERNATE
AMB OR A	AMBIENT
AMP	AMPERE
ARCH	ARCHITECT
ASC	AMPS SHORT CIRCUIT
AT	AMPERE TRIP
ATS	AUTOMATIC TRANSFER SWITCH
AUTO	AUTOMATIC
AV	AUDIO VISUAL
BAT	BATTERY
BC	BARE COPPER
BD	BOARD
BFF	BELOW FINISH FLOOR
BIL	BASIC INSULATION LEVEL
BLDG	BUILDING
BPP	BOILER PLANT INSTRUMENTATION PANEL
BRKR	BREAKER
BYP	BY PASS
C	CONDUIT
CAB	CABINET
CALC	CALCULATE
CAP	CAPACITY
CAT	CATALOG
CATV	COMMUNITY ANTENNA TELEVISION
CCR	CONTROL CONTACTOR
CCTV	CLOSED CIRCUIT TELEVISION
CB	CODE BLUE
cd	CANDELA
CD	CONSTRUCTION DOCUMENTS
CF	CONTRACTOR FURNISHED
CF/CI	CONTRACTOR FURNISHED/CONTRACTOR INSTALLED
CF/OI	CONTRACTOR FURNISHED/OWNER INSTALLED
CFE	CONTRACTOR FURNISHED EQUIPMENT
CHW	CHILLED WATER
CHWP	CHILLED WATER PUMP
CKT	CIRCUIT
CKT BRKR	CIRCUIT BREAKER
CLF	CURRENT LIMITING FUSE
CLG	CEILING
CMU	CONCRETE MASONRY UNIT
COAX	COAX CABLE
COMM	COMMUNICATION
COMPT	COMPARTMENT
CONC	CONCRETE
CONT	CONTINUE
CONTR	CONTRACTOR
COORD	COORDINATE
CPT	CONTROL POWER TRANSFORMER
CRI	COLOR RENDERING INDEX
CT	CURRENT TRANSFORMER
CTV	CABLE TELEVISION
CU	COPPER
CU FT	CUBIC FEET
CUR	CURRENT
DB	DECIBEL OR DIRECT BURIAL
DC	DIRECT CURRENT
DCP	DIMMER CONTROL PANEL
DEG C	DEGREES CELSIUS
DEG F	DEGREES FAHRENHEIT
DEMO	DEMOLITION
DIAG	DIAGRAM
DISC	DISCONNECT
DISTR	DISTRIBUTION
DISTR PNL	DISTRIBUTION PANEL
DMR SW	DIMMER SWITCH
DN	DOWN
DPDT	DOUBLE POLE, DOUBLE THROW
DPST	DOUBLE POLE, SINGLE THROW
DRSW	DOOR SWITCH
DS	DISCONNECT SWITCH
DWG	DRAWING
EC	EMPTY CONDUIT
EG	EQUIPMENT GROUND
EL	ELEVATION
ELEC	ELECTRIC OR ELECTRICAL
ELEV	ELEVATOR
EMCP	EMERGENCY MONITORING CONTROL PANEL
EMER	EMERGENCY
EMI	ELECTROMAGNETIC INTERFERENCE
EMT	ELECTRICAL METALLIC TUBING
ENCL	ENCLOSURE
EPO	EMERGENCY POWER OFF
EPRF	EXPLOSION PROOF
ESMT	EASEMENT
EWC	ELECTRIC WATER COOLER
EWH	ELECTRIC WATER HEATER
EXIST, EX	EXISTING
FA	FIRE ALARM
FAAP	FIRE ALARM ANNUNCIATOR PANEL
FABL	FIRE ALARM BELL
FABX	FIRE ALARM BOX
FACP	FIRE ALARM CONTROL PANEL
FC	FOOTCANDLE
FI	FILM ILLUMINATOR
FIXT	FIXTURE
FLA	FULL LOAD AMPS
FLEX	FLEXIBLE METALLIC CONDUIT
FLT	FLOODLIGHT
FLUOR	FLUORESCENT
FLUOR FIX	FLUORESCENT FIXTURE
FOUTT	TELEPHONE FLOOR OUTLET
FP	FIRE PROTECTION
FT	FEET OR FOOT
FU SW	FUSED SWITCH
FVNR	FULL VOLTAGE NON-REVERSING
FVR	FULL VOLTAGE REVERSING
G OR GND	GROUND OR GENERATOR
GEN	GENERATOR
GFCI	GROUND FAULT CIRCUIT INTERRUPTER
GTB	GROUND TERMINAL BOX
HID	HIGH INTENSITY DISCHARGE
HOA	HAND-OFF-AUTOMATIC
HP	HORSEPOWER
HT	HEIGHT
HZ	HERTZ
IESNA	ILLUMINATION ENGINEERING SOCIETY OF NORTH AMERICA
IMC	INTERMEDIATE METAL CONDUIT
INCAND	INCANDESCENT
IR	INFRARED
IWH	INSTANTANEOUS WATER HEATER
J-BOX, JB	JUNCTION BOX
kV	KILOVOLT
kVA	KILOVOLT AMPERE
kVAH	KILOVOLT AMPERE PER HOUR
kVAR	KILOVOLT AMPERE REACTIVE
kW	KILOWATT
kWH	KILOWATT HOUR
kWHM	KILOWATT HOUR METER
LED	LIGHT EMITTING DIODE
LF	LINEAR FEET (FOOT)
LM	LUMEN
LP	LIGHT POLE
LPS	LOW PRESSURE SODIUM
LRA	LOCKED ROTOR AMPS
LTCP	LOCAL TEMPERATURE CONTROL PANEL
LT	LIGHT
LTG	LIGHTING
LTG PNL	LIGHTING PANEL
LTNG	LIGHTNING
LV	LOW VOLTAGE
MATV	MASTER ANTENNA TELEVISION SYSTEM
MAX	MAXIMUM
MC	METAL-CLAD
MCA	MINIMUM CIRCUIT AMPS
MCB	MAIN CIRCUIT BREAKER
MCC	MOTOR CONTROL CENTER
MDP	MAIN DISTRIBUTION PANEL
MECH	MECHANICAL
MG	MOTOR GENERATOR
MH	MANHOLE
MIN	MINIMUM
MOCP	MAXIMUM OVERCURRENT PROTECTION
MLO	MAIN LUGS ONLY
MT	MOUNT
MTD	MOUNTED
MTG	MOUNTING
MTS	MANUAL TRANSFER SWITCH
MV	MEDIUM VOLTAGE
MVA	MEGAVOLT-AMPERE
MW	MEGAWATT MICROWAVE
NA	NOT APPLICABLE
NAC	NOTIFICATION APPLIANCES CIRCUIT PANEL
NEC	NATIONAL ELECTRICAL CODE
NEMA	NATIONAL ELECTRICAL MANUFACTURERS ASSOCIATION
NEUT OR N	NEUTRAL
NFPA	NATIONAL FIRE PROTECTION ASSOCIATION
NIC	NOT IN CONTRACT
NL	NIGHT LIGHT
NO	NORMALLY OPEN
NS	NO SCALE
NTS	NOT TO SCALE
OC	ON CENTER
OD	OUTSIDE DIAMETER
OL	OVERLOAD
P	POLE
PA	PUBLIC ADDRESS
PB	PANELBOARD, PULL BOX, OR PUSHBUTTON
PBPU	PREFABRICATED BEDSIDE PATIENT UNIT
PCB	POLYCHLORINATED BIPHENYL
PEC	PHOTOELECTRIC CELL
PED	PEDESTAL
PEND	PENDANT
PF	POWER FACTOR
PH	PHASE
PNL	PANEL
POD	POWER OPERATED DAMPER
PT	POTENTIAL TRANSFORMER
PTRV	POWER TYPE ROOF VENTILATION
PVC	POLYVINYL CHLORIDE (PLASTIC)
PWR	POWER
RCP	REFLECTED CEILING PLAN
REC	RECESSED
RECPT	RECEPTACLE
RGS	RIGID GALVANIZED STEEL
RM	ROOM
RMS	ROOT MEAN SQUARE
REQD	REQUIRED
SCC	SHORT CIRCUIT CAPACITY
SES	SERVICE ENTRANCE SECTION
SD	SMOKE DETECTOR
SF	SQUARE FOOT (FEET)
SHT	SHEET
SI	INTERNATIONAL SYSTEM OF UNITS
SPEC	SPECIFICATION
SPST	SINGLE POLE, SINGLE THROW
SURF	SURFACE
SW	SWITCH
SWBD	SWITCHBOARD
SWGR	SWITCHGEAR
TC	TIME CLOCK
TEL	TELEPHONE
TP	TWISTED PAIR
TPS	TWISTED PAIR SHIELDED
TTB	TELEPHONE TERMINAL BOARD
TV	TELEVISION
TYP	TYPICAL
UFD	UNDERFLOOR DUCT
UGND	UNDERGROUND
UL	UNDERWRITERS LABORATORY
UON	UNLESS OTHERWISE NOTED
UPS	UNINTERRUPTIBLE POWER SUPPLY
UTIL	UTILITY
V	VOLT
VA	VOLT AMPERE
VAR	VOLT AMPERE REACTIVE
VFD	VARIABLE FREQUENCY DRIVE
VOLT	VOLTAGE
W	WATT
WH	WATER HEATER
WP	WEATHERPROOF
XFER	TRANSFER
XFMR	TRANSFORMER

GENERAL NOTES

1. THIS IS A STANDARD LEGEND SHEET. SOME SYMBOLS OR ABBREVIATIONS MAY APPEAR ON THIS SHEET AND NOT ON THE PLANS.

Revisions:	Date:
100% CONSTRUCTION + BID DRAWINGS	10/06/2023
100% CONSTRUCTION + BID DRAWINGS	9/28/2023
95% CONSTRUCTION DOCUMENTS	9/01/2023
65% DESIGN DEVELOPMENT	7/27/2023
35% SCHEMATIC DESIGN	6/27/2023

CONSULTANT

ARCHITECT/ENGINEER OF RECORD

BANCROFT ARCHITECTS + ENGINEERS
3300 Dundee RD.
Northbrook, IL 60062
T: 847.952.9362
www.bancroft-ae.com
VA CONTRACT NO. 36C77623C0052
Bancroft Project No. 22-131

STAMP

LICENSED PROFESSIONAL ENGINEER JOSHUA MIKELS 062-072690 10/6/2023 OF ILLINOIS

Office of Construction and Facilities Management

U.S. Department of Veterans Affairs

Drawing Title: ELECTRICAL - SYMBOLS AND ABBREVIATIONS

Approved: Project Director

Phase: 100% CONSTRUCTION + BID DRAWINGS

Project Title: G.V. (Sonny) Montgomery VAMC EHRM-TASS

Project Number: 586-22-703

Building Number: R+E

Location: G.V. (Sonny) Montgomery VAMC

Issue Date: 10/06/2023

Checked: WG

Drawn: JRM

Drawing Number: E-002

VA FORM 08-6231

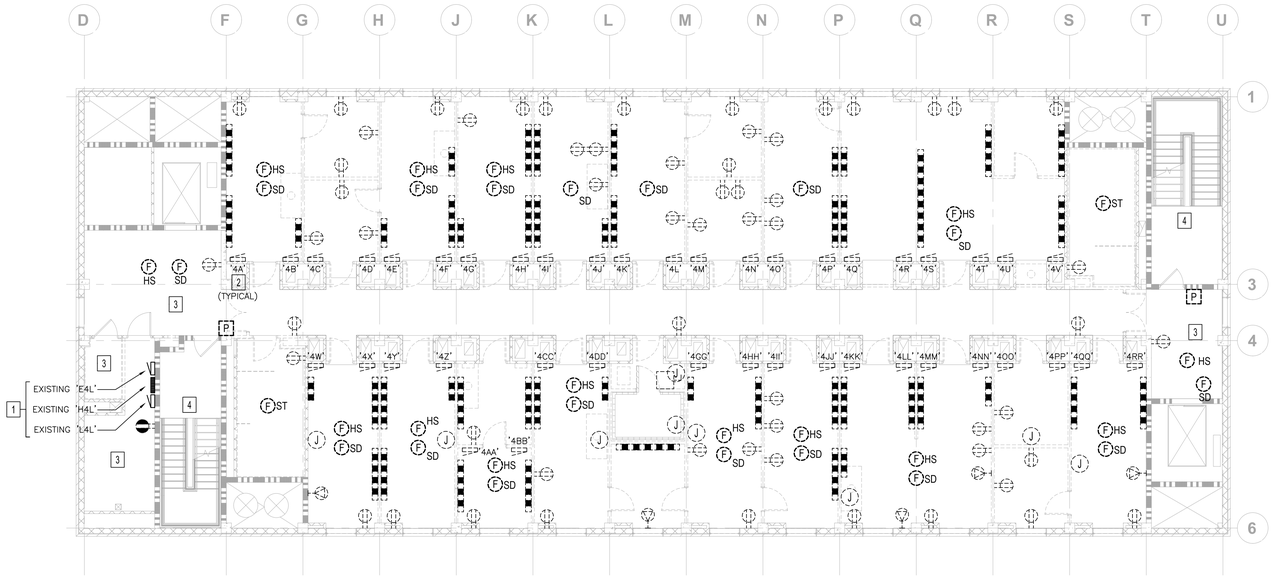

N

1 FOURTH FLOOR POWER AND FIRE ALARM PLAN - DEMOLITION

SCALE: 1/8" = 1'-0"

GENERAL NOTES - FLOOR PLAN

A. REMOVE, CUT, ALTER, REPLACE, PATCH AND REPAIR EXISTING ITEMS AS NECESSARY TO INSTALL NEW WORK. PATCH AND/OR REPAIR EXISTING WORK DISTURBED AS A RESULT OF PERFORMING NEW WORK. MATCH EXISTING CONDITIONS.

B. PROVIDE LABELS ABOVE THE CEILING, ON EACH ROOM, AT FIRE RESISTIVE WALLS TO PREVENT LATER ALTERATION OF RATING.

C. REFER TO MECHANICAL, PLUMBING, AND FIRE PROTECTION DRAWINGS FOR COORDINATION OF EQUIPMENT, DIFFUSERS, SPRINKLER HEAD LOCATIONS, ETC.

D. DURING CONSTRUCTION PROTECT EXISTING MECHANICAL, PLUMBING, FIRE PROTECTION, AND ELECTRICAL TO REMAIN.

X KEYNOTES - FLOOR PLAN

1. EXISTING PANELS TO REMAIN.
2. EXISTING PANEL TO BE REMOVED. REMOVE ALL ASSOCIATED BRANCH CIRCUITS. REFER TO SINGLE LINE DIAGRAM FOR MORE INFORMATION.
3. ALL EXISTING DEVICES IN THIS ROOM SHALL BE REMOVED DURING DEMOLITION AND THEN NEW DEVICES SHALL BE RE-INSTALLED IN THE SAME LOCATION DURING NEW WORK. FIELD VERIFY ALL DEVICE LOCATIONS AND QUANTITIES. IF DEVICE IS ON A WALL BEING DEMO'D, INSTALL NEW DEVICE IN SIMILAR LOCATION IN NEW WALL.
4. NO WORK IN THIS SPACE.

Revisions:	Date:
100% CONSTRUCTION + BID DRAWINGS	10/06/2023
100% CONSTRUCTION + BID DRAWINGS	9/28/2023
95% CONSTRUCTION DOCUMENTS	9/01/2023
65% DESIGN DEVELOPMENT	7/27/2023
35% SCHEMATIC DESIGN	6/27/2023

CONSULTANT

ARCHITECT/ENGINEER OF RECORD

BANCROFT ARCHITECTS + ENGINEERS
3300 Dundee RD.
Northbrook, IL 60062
T: 847.952.9362
www.bancroft-ae.com
VA CONTRACT NO. 36C77623C0052
Bancroft Project No. 22-131

STAMP

LICENSED PROFESSIONAL ENGINEER JOSHUA MIKELS 062-072690 10/6/2023 OF ILLINOIS

Office of Construction and Facilities Management

VA U.S. Department of Veterans Affairs

Drawing Title: ELECTRICAL - POWER DEMOLITION PLAN, FOURTH FLOOR

Approved: Project Director

Phase: 100% CONSTRUCTION + BID DRAWINGS

Project Title: G.V. (Sonny) Montgomery VAMC EHRM-TASS

Location: G.V. (Sonny) Montgomery VAMC

Issue Date: 10/06/2023

Checked: WG

Drawn: JRM

Project Number: 586-22-703

Building Number: R+E

Drawing Number: EPD104

VA FORM 08-6231

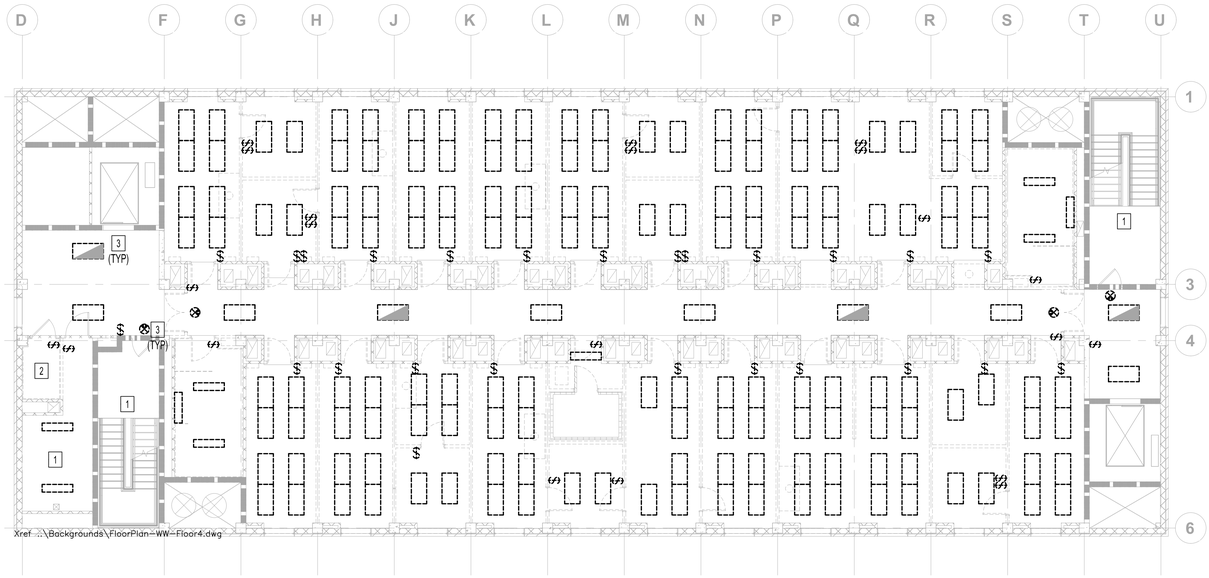

N

1 FOURTH FLOOR LIGHTING PLAN - DEMOLITION

SCALE: 1/8" = 1' - 0"

GENERAL NOTES - FLOOR PLAN

A. REMOVE, CUT, ALTER, REPLACE, PATCH AND REPAIR EXISTING ITEMS AS NECESSARY TO INSTALL NEW WORK. PATCH AND/OR REPAIR EXISTING WORK DISTURBED AS A RESULT OF PERFORMING NEW WORK. MATCH EXISTING CONDITIONS.

B. PROVIDE LABELS ABOVE THE CEILING, ON EACH ROOM, AT FIRE RESISTIVE WALLS TO PREVENT LATER ALTERATION OF RATING.

C. REFER TO MECHANICAL, PLUMBING, AND FIRE PROTECTION DRAWINGS FOR COORDINATION OF EQUIPMENT, DIFFUSERS, SPRINKLER HEAD LOCATIONS, ETC.

D. DURING CONSTRUCTION PROTECT EXISTING MECHANICAL, PLUMBING, FIRE PROTECTION, AND ELECTRICAL TO REMAIN.

E. REFER TO ARCHITECTURAL 3RD FLOOR DEMO PLAN ON DRAWING AD103. PLUMBING DEMOLITION IS TAKING PLACE IN THE 3RD FLOOR CEILING. SELECTIVE CEILING DEMO AND REPLACEMENT WILL BE REQUIRED. REMOVE EXISTING LIGHTING FIXTURES, CLEAN/RE-LAMP AND RE-INSTALL FIXTURES AS NEEDED.

X KEYNOTES - FLOOR PLAN

1. NO WORK IN THIS ROOM.
2. EXISTING LIGHTING FIXTURES IN THIS ROOM TO REMAIN. REMOVE SWITCH AND MAINTAIN SWITCH LEG FOR NEW WORK.
3. MAINTAIN EMERGENCY LIGHTING BRANCH CIRCUIT FOR CONNECTION TO NEW LIGHT FIXTURES. EXTEND CIRCUIT TO FIXTURES AS NEEDED PER NEW WORK.

100% CONSTRUCTION + BID DRAWINGS	10/06/2023
100% CONSTRUCTION + BID DRAWINGS	9/28/2023
95% CONSTRUCTION DOCUMENTS	9/01/2023
65% DESIGN DEVELOPMENT	7/27/2023
35% SCHEMATIC DESIGN	6/27/2023
Revisions:	Date:

CONSULTANT

ARCHITECT/ENGINEER OF RECORD

BANCROFT ARCHITECTS + ENGINEERS
3300 Dundee RD.
Northbrook, IL 60062
T: 847.952.9362
www. bancroft-ae.com
VA CONTRACT NO. 36C77623C0052
Bancroft Project No. 22-131

STAMP

LICENSED PROFESSIONAL ENGINEER JOSHUA MIKELS 062-072690 10/6/2023 OF ILLINOIS

Office of Construction and Facilities Management

U.S. Department of Veterans Affairs

Drawing Title: ELECTRICAL - LIGHTING DEMOLITION PLAN, FOURTH FLOOR

Approved: Project Director

Phase: 100% CONSTRUCTION + BID DRAWINGS

Project Title: G.V. (Sonny) Montgomery VAMC EHRM-TASS

Location: G.V. (Sonny) Montgomery VAMC

Issue Date: 10/06/2023

Checked: WG

Drawn: JRM

Project Number: 586-22-703

Building Number: R+E

Drawing Number: ELD104

VA FORM 08-6231

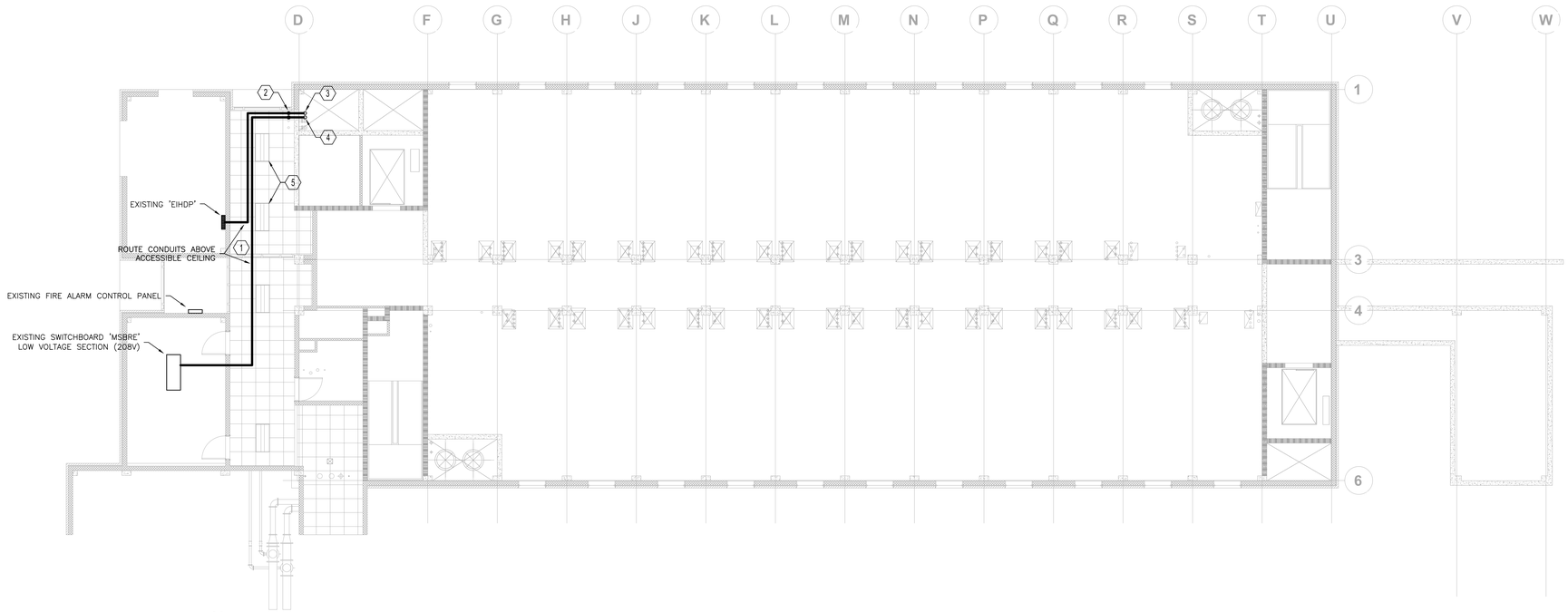

N

1 FIRST FLOOR POWER PLAN - NEW WORK

SCALE: 1/8" = 1'-0"

GENERAL NOTES - FLOOR PLAN

A. REMOVE, CUT, ALTER, REPLACE, PATCH AND REPAIR EXISTING WORK AS NECESSARY TO INSTALL NEW WORK. PATCH AND/OR REPAIR EXISTING WORK DISTURBED AS A RESULT OF PERFORMING NEW WORK. MATCH EXISTING CONDITION.

B. PROVIDE LABELS ABOVE THE CEILING, ON EACH ROOM, AT FIRE RESISTIVE WALLS TO PREVENT LATER ALTERATION OF RATING.

C. REFER TO MECHANICAL, PLUMBING, AND FIRE PROTECTION DRAWINGS FOR COORDINATION OF EQUIPMENT, DIFFUSERS, SPRINKLER HEAD LOCATIONS, ETC.

D. DURING CONSTRUCTION PROTECT EXISTING MECHANICAL, PLUMBING, FIRE PROTECTION, AND ELECTRICAL TO REMAIN.

(X) KEYNOTES - FLOOR PLAN

1. CHILLED WATER PIPING BEING RUN IN THIS SAME PATH BY MECHANICAL CONTRACTOR. COORDINATE WORK (ROUTING, SCHEDULE, ETC.) IN THIS AREA WITH MECHANICAL CONTRACTOR. ROUTE CONDUITS AS HIGH AS POSSIBLE IN THIS CORRIDOR.
2. DROP CONDUITS TO ROUTE BELOW STRUCTURAL BEAM.
3. ROUTE CONDUIT UP TO THE FIFTH FLOOR. REFER TO FIFTH FLOOR POWER PLAN FOR CONTINUATION.
4. ROUTE CONDUIT UP TO THE FOURTH FLOOR. REFER TO FOURTH FLOOR POWER PLAN FOR CONTINUATION.
5. CEILING GRID BEING REPLACED IN THIS PORTION OF THE CORRIDOR. REMOVE FIXTURE DURING DEMOLITION. CLEAN, RELAMP, RE-LENS, ETC. AND REPLACE FIXTURE IN NEW CEILING. CONNECT TO EXISTING BRANCH CIRCUIT AND CONTROL.

100% CONSTRUCTION + BID DRAWINGS	10/06/2023
100% CONSTRUCTION + BID DRAWINGS	9/28/2023
95% CONSTRUCTION DOCUMENTS	9/01/2023
65% DESIGN DEVELOPMENT	7/27/2023
35% SCHEMATIC DESIGN	6/27/2023
Revisions:	Date:

CONSULTANT

ARCHITECT/ENGINEER OF RECORD

BANCROFT ARCHITECTS + ENGINEERS
3300 Dundee RD.
Northbrook, IL 60062
T: 847.952.9362
www.bancroft-ae.com
VA CONTRACT NO. 36C77623C0052
Bancroft Project No. 22-131

STAMP

LICENSED PROFESSIONAL ENGINEER JOSHUA MIKELS 062-072690 10/6/2023 OF ILLINOIS

Office of Construction and Facilities Management

VA U.S. Department of Veterans Affairs

Drawing Title: ELECTRICAL - POWER PLAN, FIRST FLOOR

Approved: Project Director

Phase: 100% CONSTRUCTION + BID DRAWINGS

Project Title: G.V. (Sonny) Montgomery VAMC EHRM-TASS

Location: G.V. (Sonny) Montgomery VAMC

Issue Date: 10/06/2023

Checked: WG

Drawn: JRM

Project Number: 586-22-703

Building Number: R+E

Drawing Number: EP101

VA FORM 08-6231

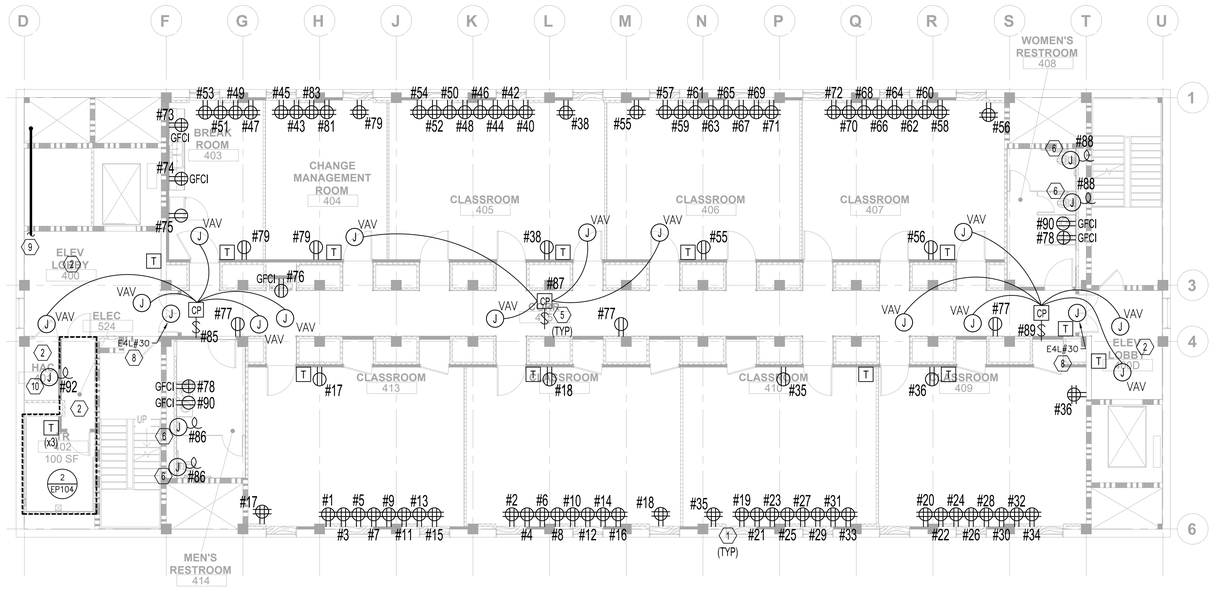

N

1 FOURTH FLOOR POWER PLAN - NEW WORK

SCALE: 1/8" = 1' - 0"

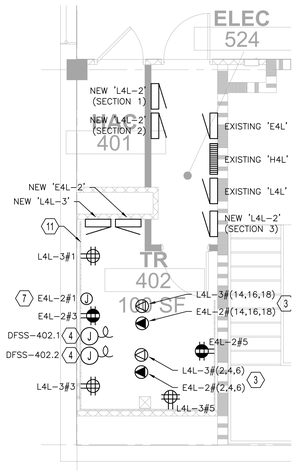

N

2 ENLARGED PLAN RMS 402/524 - NEW WORK

SCALE: 1/4" = 1' - 0"

GENERAL NOTES - FLOOR PLAN

A. REMOVE, CUT, ALTER, REPLACE, PATCH AND REPAIR EXISTING WORK AS NECESSARY TO INSTALL NEW WORK. PATCH AND/OR REPAIR EXISTING WORK DISTURBED AS A RESULT OF PERFORMING NEW WORK. MATCH EXISTING CONDITION.

B. PROVIDE LABELS ABOVE THE CEILING, ON EACH ROOM, AT FIRE RESISTIVE WALLS TO PREVENT LATER ALTERATION OF RATING.

C. REFER TO MECHANICAL, PLUMBING, AND FIRE PROTECTION DRAWINGS FOR COORDINATION OF EQUIPMENT, DIFFUSERS, SPRINKLER HEAD LOCATIONS, ETC.

D. DURING CONSTRUCTION PROTECT EXISTING MECHANICAL, PLUMBING, FIRE PROTECTION, AND ELECTRICAL TO REMAIN.

E. ALL RECEPTACLES SHALL BE CIRCUITED TO NEW PANEL L4L-2 UNLESS NOTED OTHERWISE.

F. PROVIDE DEDICATED NEUTRAL FOR EACH BRANCH CIRCUIT.

G. REFER TO MECHANICAL PLANS FOR VAV BOX AND THERMOSTAT LOCATIONS. DEFER TO LOCATIONS AS SHOWN ON MECHANICAL PLANS IF THEY DIFFER FROM THIS PLAN.

(X) KEYNOTES - FLOOR PLAN

1. COORDINATE ROUGH-IN LOCATION FOR CLASSROOM OUTLETS WITH DATA OUTLETS.

2. INSTALL NEW RECEPTACLES TO REPLACE EXISTING IN THIS ROOM. CONNECT TO EXISTING BRANCH CIRCUIT CONDUCTORS. REFER TO DEMO PLAN FOR DEVICE LOCATIONS.

3. PROVIDE NEMA L21-20R RECEPTACLE FOR USE WITH TECHNOLOGY ROOM SERVER RACK. CIRCUIT AS SHOWN. PROVIDE 3#12, #12N, #12G, 3/4"C.

4. PROVIDE JUNCTION BOX AND CONNECT POWER AND COMMUNICATION WIRING FOR SPLIT SYSTEM INDOOR UNIT DFSS-402.1 AND DFSS-402.2. REFER TO EQUIPMENT CONNECTION SCHEDULE ON SHEET E601 FOR MORE INFORMATION.

5. PROVIDE AND INSTALL 24V POWER SUPPLY FOR VAV BOXES. POWER SUPPLY SHALL BE FUNCTIONAL DEVICES #PSH500A OR APPROVED EQUAL. PROVIDE HPRS DISCONNECT. PROVIDE 2#12, #12G, 3/4"C. COORDINATE INSTALLATION WITH MECHANICAL CONTRACTOR.

6. PROVIDE POWER FOR FLUSH VALVES. COORDINATE REQUIREMENTS WITH PLUMBING CONTRACTOR. INSTALL ZURN P6000-HW6 HARDWIRED POWER CONVERTER PROVIDED BY OTHERS. COORDINATE LOCATION OF CONVERTER WITH ARCHITECT AND PLUMBING CONTRACTOR. PROVIDE 4x4x2-1/8 BOX AND INSTALL IN WALL FOR SENSOR. RUN #18 CONDUCTORS FROM POWER CONVERTER TO SENSOR. MAKE FINAL CONNECTION FROM SENSOR TO FLUSH VALVE.

7. PROVIDE JUNCTION BOX AND HARDWIRED CONNECTION FOR ACCESS CONTROL PANEL POWER SUPPLY. PROVIDE 2#12, #12G, 3/4"C.

8. PROVIDE JUNCTION BOX AND HARDWIRED CONNECTION FOR DOOR AUTO-OPERATOR. PROVIDE 2#12, #12G, 3/4"C.

9. ROUTE CONDUIT TO NEW PANEL L4L-2.

10. PROVIDE CONNECTION TO SURFACE MOUNTED WALL HEATER. HEATER PROVIDED WITH BACK-BOX WITH KNOCKOUTS FOR ELECTRICAL CONNECTION. COORDINATE CONNECTION LOCATION WITH MECHANICAL CONTRACTOR. PROVIDE 2#12, #12G, 3/4"C IN WALL TO J-BOX, THEN TRANSITION TO BACK-BOX. CONDUCTORS TO TERMINATE ON DOUBLE-POLE, SINGLE THROW ON/OFF DISCONNECT INTEGRAL TO HEATER.

11. PANELS E4L-2 AND L4L-3 SHALL BE PROVIDED WITH AN ELECTRICAL POWER METER. ELECTRICAL POWER METER SHALL BE SEPARATELY MOUNTED AT THIS LOCATION, AND ENCLOSED IN A NEMA 250, TYPE 1 ENCLOSURE.

Revisions:	Date:
100% CONSTRUCTION + BID DRAWINGS	10/06/2023
100% CONSTRUCTION + BID DRAWINGS	9/28/2023
95% CONSTRUCTION DOCUMENTS	9/01/2023
65% DESIGN DEVELOPMENT	7/27/2023
35% SCHEMATIC DESIGN	6/27/2023

CONSULTANT

ARCHITECT/ENGINEER OF RECORD

BANCROFT ARCHITECTS + ENGINEERS
3300 Dundee RD.
Northbrook, IL 60062
T: 847.952.9362
www.bancroft-ae.com
VA CONTRACT NO. 36C77623C0052
Bancroft Project No. 22-131

STAMP

LICENSED PROFESSIONAL ENGINEER JOSHUA MIKELS 062-072690 10/6/2023 OF ILLINOIS

Office of Construction and Facilities Management

U.S. Department of Veterans Affairs

Drawing Title: ELECTRICAL - POWER PLAN, FOURTH FLOOR

Approved: Project Director

Phase: 100% CONSTRUCTION + BID DRAWINGS

Project Title: G.V. (Sonny) Montgomery VAMC EHRM-TASS

Location: G.V. (Sonny) Montgomery VAMC

Issue Date: 10/06/2023

Checked: WG

Drawn: JRM

Project Number: 586-22-703

Building Number: R+E

Drawing Number: EP104

VA FORM 08-6231

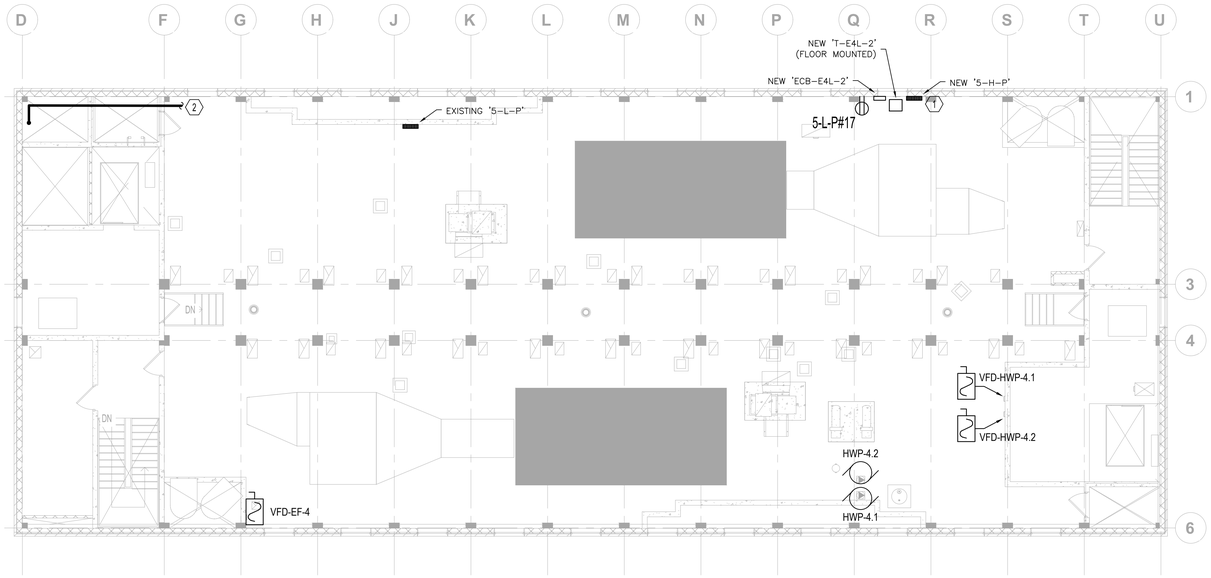

N

1 FIFTH FLOOR POWER PLAN - NEW WORK

SCALE: 1/8" = 1' - 0"

GENERAL NOTES - FLOOR PLAN

A. REMOVE, CUT, ALTER, REPLACE, PATCH AND REPAIR EXISTING WORK AS NECESSARY TO INSTALL NEW WORK. PATCH AND/OR REPAIR EXISTING WORK DISTURBED AS A RESULT OF PERFORMING NEW WORK. MATCH EXISTING CONDITION.

B. PROVIDE LABELS ABOVE THE CEILING, ON EACH ROOM, AT FIRE RESISTIVE WALLS TO PREVENT LATER ALTERATION OF RATING.

C. REFER TO MECHANICAL, PLUMBING, AND FIRE PROTECTION DRAWINGS FOR COORDINATION OF EQUIPMENT, DIFFUSERS, SPRINKLER HEAD LOCATIONS, ETC.

D. DURING CONSTRUCTION PROTECT EXISTING MECHANICAL, PLUMBING, FIRE PROTECTION, AND ELECTRICAL TO REMAIN.

E. REFER TO EQUIPMENT SCHEDULE ON DRAWING E601 FOR MORE INFORMATION (CIRCUIT NUMBER, CONDUCTOR SIZES, ETC).

(X) KEYNOTES - FLOOR PLAN

1. PROVIDE NEW PANEL. EXACT LOCATION OF PANEL TO BE COORDINATED WITH ALL OBSTRUCTIONS (EQUIPMENT, PIPING, ETC.). REFER TO SINGLE LINE DIAGRAM FOR MORE INFORMATION.

2. ROUTE CONDUIT AS HIGH AS POSSIBLE TO NEW PANEL 5-H-P.

100% CONSTRUCTION + BID DRAWINGS	10/06/2023
100% CONSTRUCTION + BID DRAWINGS	9/28/2023
95% CONSTRUCTION DOCUMENTS	9/01/2023
65% DESIGN DEVELOPMENT	7/27/2023
35% SCHEMATIC DESIGN	6/27/2023
Revisions:	Date:

CONSULTANT

ARCHITECT/ENGINEER OF RECORD

BANCROFT ARCHITECTS + ENGINEERS
3300 Dundee RD.
Northbrook, IL 60062
T: 847.952.9362
www. bancroft-ae.com
VA CONTRACT NO. 36C77623C0052
Bancroft Project No. 22-131

STAMP

LICENSED PROFESSIONAL ENGINEER
JOSHUA MIKELS
062-072690
10/6/2023
OF ILLINOIS

Office of Construction and Facilities Management

VA U.S. Department of Veterans Affairs

Drawing Title: ELECTRICAL - POWER PLAN, FIFTH FLOOR

Approved: Project Director

Phase: 100% CONSTRUCTION + BID DRAWINGS

Project Title: G.V. (Sonny) Montgomery VAMC EHRM-TASS

Location: G.V. (Sonny) Montgomery VAMC

Issue Date: 10/06/2023

Checked: WG

Drawn: JRM

Project Number: 586-22-703

Building Number: R+E

Drawing Number: EP105

VA FORM 08-6231

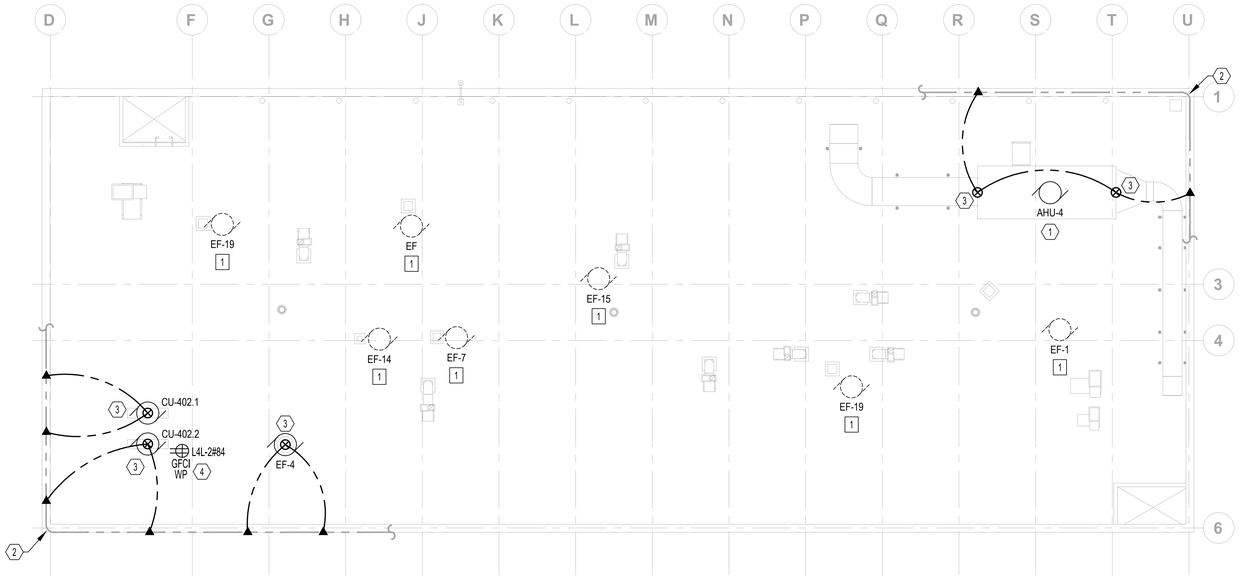

N

1 ROOF POWER PLAN - DEMOLITION AND NEW WORK

SCALE: 1/8" = 1' - 0"

GENERAL NOTES - FLOOR PLAN

A. REMOVE, CUT, ALTER, REPLACE, PATCH AND REPAIR EXISTING WORK AS NECESSARY TO INSTALL NEW WORK. PATCH AND/OR REPAIR EXISTING WORK DISTURBED AS A RESULT OF PERFORMING NEW WORK. MATCH EXISTING CONDITION.

B. REFER TO MECHANICAL DRAWINGS FOR COORDINATION OF EQUIPMENT, ETC.

C. DURING CONSTRUCTION PROTECT EXISTING ROOF MOUNTED EQUIPMENT TO REMAIN.

D. REFER TO EQUIPMENT SCHEDULE ON DRAWING E601 FOR MORE INFORMATION (CIRCUIT NUMBER, CONDUCTOR SIZES, ETC).

D. LIGHTNING PROTECTION COMPONENTS SHALL CONFIRM TO NFPA 780 AND UL 96A FOR USE ON CLASS II STRUCTURES. COMPLETE SYSTEM SHALL BE INSPECTED ON SITE AND A UL MASTER LABEL CERTIFICATE IS TO BE OBTAINED BY CONTRACTOR. REFER TO SPECIFICATION SECTION 26 41 00.

E. WHERE ROOFTOP EQUIPMENT IS BEING REMOVED, ALSO REMOVE ANY EXISTING LIGHTNING PROTECTION COMPONENTS, AND MAINTAIN CONTINUITY OF LIGHTNING PROTECTION SYSTEM.

X DEMO KEYNOTES

1. COORDINATE EQUIPMENT REMOVAL WITH MECHANICAL CONTRACTOR. REMOVE ALL ELECTRICAL EQUIPMENT, CONDUIT, AND CONDUCTORS RELEASED FROM SERVICE.

X NEW WORK KEYNOTES

1. NEW AIR HANDLING UNIT. REFER TO EQUIPMENT CONNECTION SCHEDULE FOR MORE INFORMATION.
   - 1.1. COORDINATE LOCATION OF DDC CONTROLLER WITH MECHANICAL CONTRACTOR. PROVIDE 20-AMP CIRCUIT FROM PANEL 5-L-P#15.
   - 1.2. UNIT LIGHTING AND SERVICE RECEPTACLE SHALL BE CONNECTED TO PANEL 5-L-P#17.
   - 1.3. PROVIDE NEW DUCT MOUNTED SUPPLY AND RETURN SMOKE DETECTORS. DETECTORS SHALL BE TIED INTO EXISTING SIEMENS FIRE ALARM PANEL #7 LOCATED IN FIRST FLOOR VESTIBULE 102. LOCATE REMOTE TEST SWITCH IN 5TH FLOOR BELOW.
2. EXISTING LIGHTNING PROTECTION CONDUCTOR AROUND ROOF PERIMETER TO REMAIN. ALL EXISTING LIGHTNING PROTECTION COMPONENTS ARE EXISTING TO REMAIN UNLESS NOTED OTHERWISE.
3. NEW AIR TERMINAL PROVIDED ON ROOFTOP EQUIPMENT. PROVIDE NEW LIGHTNING PROTECTION CONDUCTORS TO BOND NEW AIR TERMINALS TO EXISTING SYSTEM.
4. PROVIDE UNISTRUT IN ADDITION TO THRU ROOF CONDUIT FOR SUPPORT OF RECEPTACLE. MOUNT INDEPENDENT OF EQUIPMENT.

LIGHTNING PROTECTION SYMBOLS

—— - - ——	BARE ALUMINUM CLASS II STRANDED LIGHTNING PROTECTION CONDUCTOR
⊗	LIGHTNING PROTECTION CLASS II AIR TERMINAL
■	EXOTHERMIC GROUND CONNECTION
▲	MECHANICAL GROUND CONNECTION

100% CONSTRUCTION + BID DRAWINGS	10/06/2023
100% CONSTRUCTION + BID DRAWINGS	9/28/2023
95% CONSTRUCTION DOCUMENTS	9/01/2023
65% DESIGN DEVELOPMENT	7/27/2023
35% SCHEMATIC DESIGN	6/27/2023
Revisions:	Date:

CONSULTANT

ARCHITECT/ENGINEER OF RECORD

BANCROFT ARCHITECTS + ENGINEERS
3300 Dundee RD.
Northbrook, IL 60062
T: 847.952.9362
www. bancroft-ae.com
VA CONTRACT NO. 36C77623C0052
Bancroft Project No. 22-131

STAMP

LICENSED PROFESSIONAL ENGINEER
JOSHUA MIKELS
062-072690
10/6/2023
OF ILLINOIS

Office of Construction and Facilities Management

U.S. Department of Veterans Affairs

Drawing Title: ELECTRICAL - POWER PLAN, ROOF

Approved: Project Director

Phase: 100% CONSTRUCTION + BID DRAWINGS

Project Title: G.V. (Sonny) Montgomery VAMC EHRM-TASS

Location: G.V. (Sonny) Montgomery VAMC

Issue Date: 10/06/2023

Checked: WG

Drawn: JRM

Project Number: 586-22-703

Building Number: R+E

Drawing Number: EP106

VA FORM 08-6231

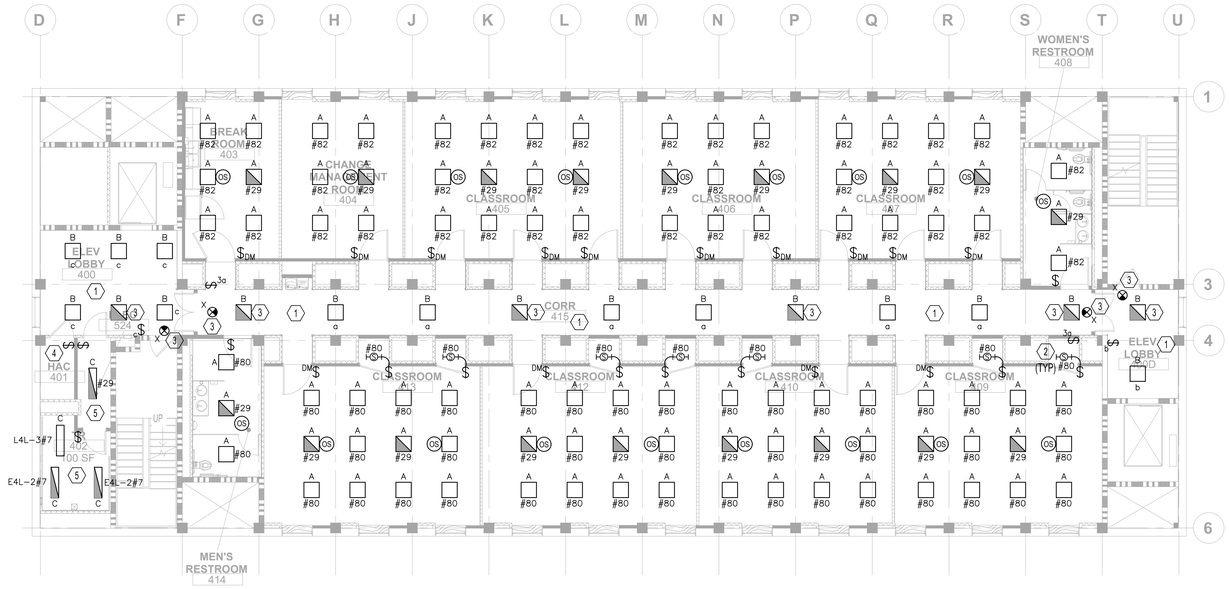

N

1 FOURTH FLOOR LIGHTING PLAN - NEW WORK

SCALE: 1/8" = 1'-0"

GENERAL NOTES - FLOOR PLAN

A. REMOVE, CUT, ALTER, REPLACE, PATCH AND REPAIR EXISTING WORK AS NECESSARY TO INSTALL NEW WORK. PATCH AND/OR REPAIR EXISTING WORK DISTURBED AS A RESULT OF PERFORMING NEW WORK. MATCH EXISTING CONDITION.

B. PROVIDE LABELS ABOVE THE CEILING, ON EACH ROOM, AT FIRE RESISTIVE WALLS TO PREVENT LATER ALTERATION OF RATING.

C. REFER TO MECHANICAL, PLUMBING, AND FIRE PROTECTION DRAWINGS FOR COORDINATION OF EQUIPMENT, DIFFUSERS, SPRINKLER HEAD LOCATIONS, ETC.

D. DURING CONSTRUCTION PROTECT EXISTING MECHANICAL, PLUMBING, FIRE PROTECTION, AND ELECTRICAL TO REMAIN.

E. EXIT SIGNS SHALL BE RE-CONNECTED TO EXISTING UN-SWITCHED EMERGENCY BRANCH CIRCUIT

F. IN ROOMS WHERE THERE IS ONLY ONE SWITCH SHOWN WITH NO SWITCH LEG INDICATION, SWITCH CONTROLS ALL NORMAL AND EMERGENCY LIGHTS IN THAT ROOM ONLY. PROVIDE UL924 RELAYS FOR EMERGENCY FIXTURES.

G. REFER TO POWER FLOOR PLAN FOR PANEL LOCATIONS.

H. ALL EMERGENCY BRANCH FIXTURES WITH A CIRCUIT INDICATOR SHALL BE CIRCUITED TO PANEL E4L UNLESS NOTED OTHERWISE.

I. ALL NORMAL BRANCH FIXTURES WITH A CIRCUIT INDICATOR SHALL BE CIRCUITED TO PANEL L4L-2 UNLESS NOTED OTHERWISE.

(X) KEYNOTES - FLOOR PLAN

1. CONNECT NEW NORMAL BRANCH LIGHTING FIXTURES AND SWITCHES TO EXISTING NORMAL BRANCH CIRCUIT AND SWITCH LEG IN THIS ROOM. EXTEND CONDUIT AND WIRING AS NEEDED.
2. STRIP FIXTURE SHALL BE MOUNTED ON THE WALL ABOVE THE DOOR, 1' BELOW THE CEILING.
3. CONNECT EMERGENCY EGRESS FIXTURE/EXIT SIGN TO EXISTING UN-SWITCHED EMERGENCY BRANCH CIRCUIT. EXTEND CONDUIT AND WIRING AS NEEDED. LIGHTS ARE CONSTANT ON.
4. CONNECT NEW SINGLE POLE SWITCH TO EXISTING LIGHT.
5. STRIP FIXTURES SHALL BE PROVIDED WITH TRAPEZE HANGARS AND POSITIONED BELOW CABLE TRAY IN THIS ROOM.

TYPICAL RELAY PACK/SENSOR WIRING DIAGRAM:

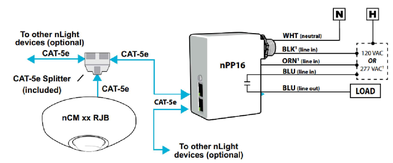

ROOMS WITH DIMMABLE NORMAL AND EMERGENCY LIGHTING:

1. MANUAL CONTROL - ON/OFF AND RAISE/LOWER
   1.1. ACUITY - nPODM DX (WALL CONTROL)
2. OCCUPANCY CONTROL - FIXTURES MANUALLY TURNED ON. FIXTURES TURN OFF AUTOMATICALLY WHEN ROOM BECOMES VACANT.
   2.1. ACUITY - nCM PDT 9 RJB (OCCUPANCY SENSOR)
3. NORMAL LUMINAIRE(S)
   3.1. ACUITY - nPP16 D EFP
4. EMERGENCY LUMINAIRE(S)
   4.1. ACUITY - nPP16 D ER EFP

RESTROOMS WITH NON-DIMMABLE NORMAL AND EMERGENCY LIGHTING:

1. MANUAL CONTROL - ON/OFF
   1.1. ACUITY - nPODM (WALL CONTROL)
2. OCCUPANCY CONTROL - FIXTURES AUTOMATICALLY TURNED ON. FIXTURES TURN OFF AUTOMATICALLY WHEN ROOM BECOMES VACANT.
   2.1. ACUITY - nCM PDT 9 RJB (OCCUPANCY SENSOR)
3. NORMAL LUMINAIRE(S)
   3.1. ACUITY - nPP16 EFP
4. EMERGENCY LUMINAIRE(S)
   4.1. ACUITY - nPP16 ER EFP

SPACES WITH WALL CONTROL ONLY (NON-DIMMING):

1. MANUAL CONTROL - ON/OFF
   1.1. ACUITY - nPODM (WALL CONTROL)
2. NORMAL LUMINAIRE(S) (IF PRESENT)
   2.1. ACUITY - nPP16 EFP
3. EMERGNCY LUMINAIRE(S) (IF PRESENT)
   3.1. ACUITY - nPP16 ER EFP

CORRIDOR AND ELEVATOR LOBBIES:

1. EMERGENCY FIXTURES UN-SWITCHED (CONSTANT ON)
2. NORMAL FIXTURES MANUAL CONTROL - ON/OFF
   2.1. ACUITY - nPODM (WALL CONTROL)
3. NORMAL LUMINAIRE(S)
   3.1. ACUITY - nPP16 EFP

TYPICAL WALL CONTROL WIRING DIAGRAMS:

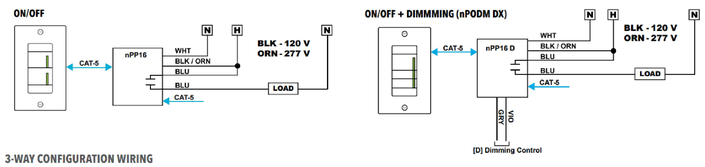

3-WAY CONFIGURATION WIRING

WallPods and/or nLight wall switch sensors can be configured together to create zones with multiple switching locations.

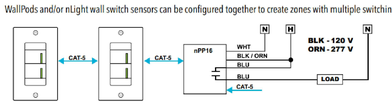

(X) LIGHTING CONTROL DESIGN REQUIRMENTS/NARRATIVES

SCALE: N/A

100% CONSTRUCTION + BID DRAWINGS	10/06/2023
100% CONSTRUCTION + BID DRAWINGS	9/28/2023
95% CONSTRUCTION DOCUMENTS	9/01/2023
65% DESIGN DEVELOPMENT	7/27/2023
35% SCHEMATIC DESIGN	6/27/2023
Revisions:	Date:

CONSULTANT

ARCHITECT/ENGINEER OF RECORD

BANCROFT ARCHITECTS + ENGINEERS
3300 Dundee RD.
Northbrook, IL 60062
T: 847.952.9362
www.bancroft-ae.com
VA CONTRACT NO. 36C77623C0052
Bancroft Project No. 22-131

STAMP

LICENSED PROFESSIONAL ENGINEER JOSHUA MIKELS 062-072690 10/6/2023 OF ILLINOIS

Office of Construction and Facilities Management

VA U.S. Department of Veterans Affairs

Drawing Title: ELECTRICAL - LIGHTING PLAN, FOURTH FLOOR

Approved: Project Director

Phase: 100% CONSTRUCTION + BID DRAWINGS

Project Title: G.V. (Sonny) Montgomery VAMC EHRM-TASS

Location: G.V. (Sonny) Montgomery VAMC

Issue Date: 10/06/2023

Checked: WG

Drawn: JRM

Project Number: 586-22-703

Building Number: R+E

Drawing Number: EL104

VA FORM 08-6231

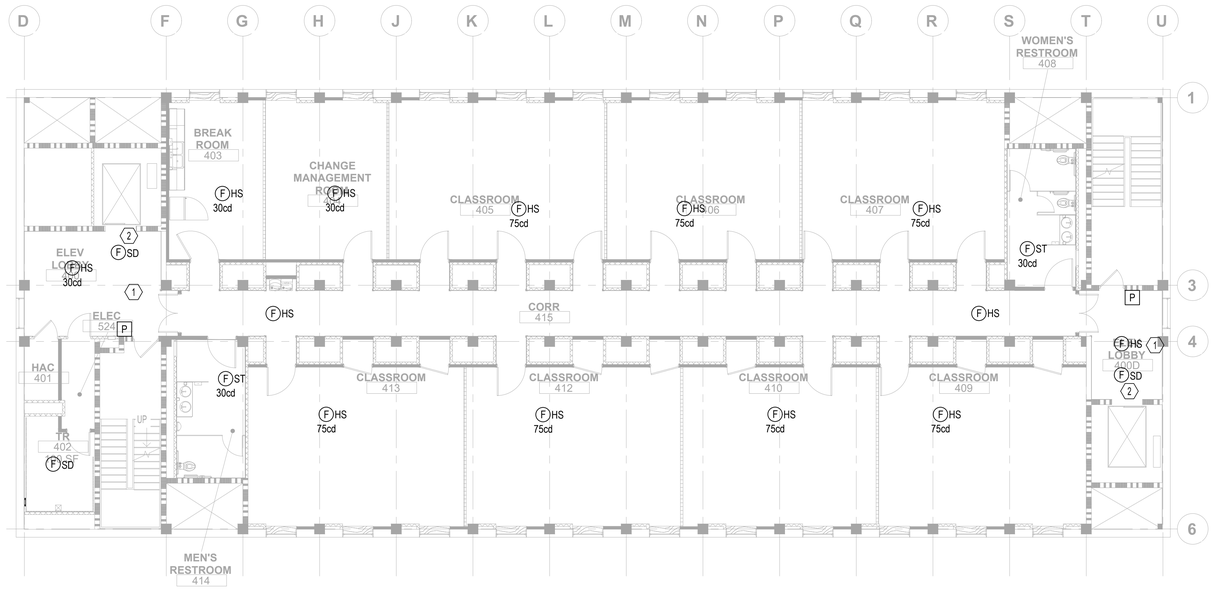

N

1 FOURTH FLOOR FIRE ALARM PLAN - NEW WORK

SCALE: 1/8" = 1' - 0"

GENERAL NOTES - FLOOR PLAN

A. REMOVE, CUT, ALTER, REPLACE, PATCH AND REPAIR EXISTING WORK AS NECESSARY TO INSTALL NEW WORK. PATCH AND/OR REPAIR EXISTING WORK DISTURBED AS A RESULT OF PERFORMING NEW WORK. MATCH EXISTING CONDITION.

B. PROVIDE LABELS ABOVE THE CEILING, ON EACH ROOM, AT FIRE RESISTIVE WALLS TO PREVENT LATER ALTERATION OF RATING.

C. REFER TO MECHANICAL, PLUMBING, AND FIRE PROTECTION DRAWINGS FOR COORDINATION OF EQUIPMENT, DIFFUSERS, SPRINKLER HEAD LOCATIONS, ETC.

D. DURING CONSTRUCTION PROTECT EXISTING MECHANICAL, PLUMBING, FIRE PROTECTION, AND ELECTRICAL TO REMAIN.

E. MAIN FACP (SIEMENS - FIRE ALARM PANEL #7) LOCATED ON FIRST FLOOR NEAR THE EGRESS DOOR ON THE WEST SIDE OF THE BUILDING.

(X) KEYNOTES - FLOOR PLAN

1. INSTALL NEW FIRE ALARM DEVICES LIKE-FOR-LIKE AT EXISTING LOCATIONS IN THIS ROOM.
2. ELEVATOR RECALL.

100% CONSTRUCTION + BID DRAWINGS	10/06/2023
100% CONSTRUCTION + BID DRAWINGS	9/28/2023
95% CONSTRUCTION DOCUMENTS	9/01/2023
65% DESIGN DEVELOPMENT	7/27/2023
35% SCHEMATIC DESIGN	6/27/2023
Revisions:	Date:

CONSULTANT

ARCHITECT/ENGINEER OF RECORD

BANCROFT ARCHITECTS + ENGINEERS
3300 Dundee RD.
Northbrook, IL 60062
T: 847.952.9362
www. bancroft-ae.com
VA CONTRACT NO. 36C77623C0052
Bancroft Project No. 22-131

STAMP

LICENSED PROFESSIONAL ENGINEER JOSHUA MIKELS 062-072690 10/6/2023 OF ILLINOIS

Office of Construction and Facilities Management

U.S. Department of Veterans Affairs

Drawing Title: ELECTRICAL - FIRE ALARM AND DETECTION PLAN, FOURTH FLOOR

Approved: Project Director

Phase: 100% CONSTRUCTION + BID DRAWINGS

Project Title: G.V. (Sonny) Montgomery VAMC EHRM-TASS

Location: G.V. (Sonny) Montgomery VAMC

Issue Date: 10/06/2023

Checked: WG

Drawn: JRM

Project Number: 586-22-703

Building Number: R+E

Drawing Number: EF104

VA FORM 08-6231

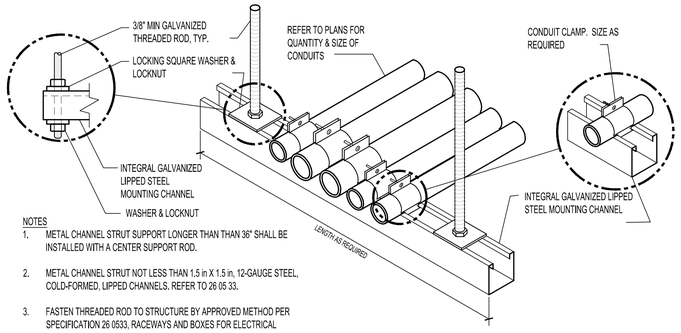

NOTES

1. METAL CHANNEL STRUT SUPPORT LONGER THAN THAN 36" SHALL BE INSTALLED WITH A CENTER SUPPORT ROD.
2. METAL CHANNEL STRUT NOT LESS THAN 1.5 in X 1.5 in, 12-GAUGE STEEL, COLD-FORMED, LIPPED CHANNELS. REFER TO 26 05 33.
3. FASTEN THREADED ROD TO STRUCTURE BY APPROVED METHOD PER SPECIFICATION 26 0533, RACEWAYS AND BOXES FOR ELECTRICAL SYSTEMS. FIELD VERIFY EXACT CONDITIONS.
4. FOR TRAPEZE INSTALLATIONS IN SEISMIC AREAS REFER TO SPECIFICATION SECTION 10 05 41, SEISMIC RESTRAINT REQUIREMENTS FOR NON-STRUCTURAL COMPONENTS.
5. APPLY A RUST INHIBITOR ON CUT OR ROUGH AREAS. SMOOTH EDGES AND ROD ENDS.
6. ASME B31.3 - 335.2.3 BOLT LENGTHS. BOLTS SHALL EXTEND THROUGH THEIR NUTS SUCH THAT THERE IS COMPLETE THREAD ENGAGEMENT FOR THE FULL DEPTH OF THE NUT.

6 CONDUIT TRAPEZE MOUNTING DETAIL
NTS

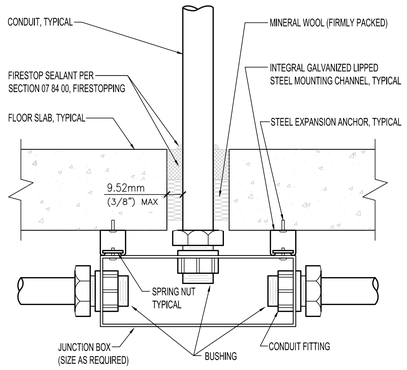

4 FLOOR SLAB PENETRATION DETAIL
NTS

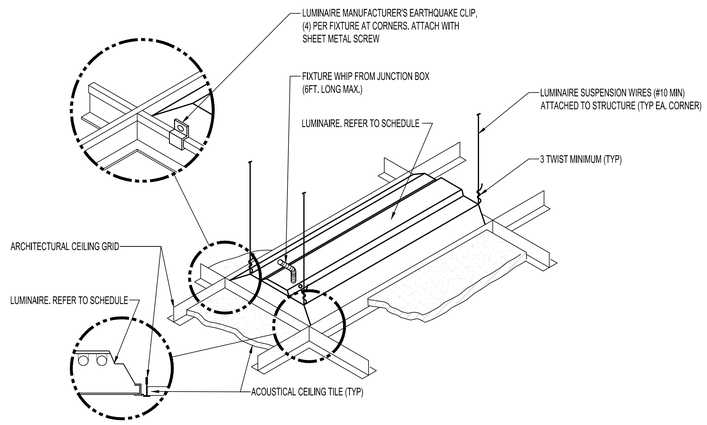

1 LUMINAIRE MOUNTING - LAY-IN CEILING
NTS

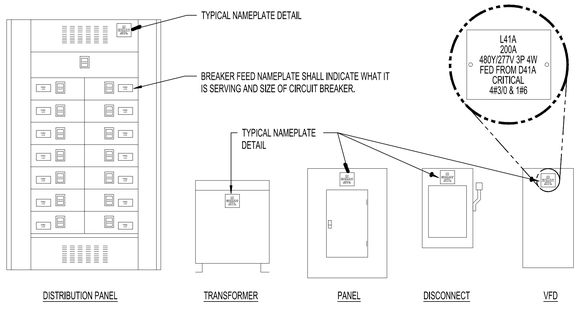

DETAIL NOTES:

1. TAGS SHALL BE LAMINATED RESIN. TAG THICKNESS TO BE 1/16" FOR UNITS UP TO 20 SQUARE INCHES OR 8" IN LENGTH AND 1/8" FOR LARGER TAGS.
2. SECURE TAGS TO EQUIPMENT WITH SELF-TAPPING STAINLESS STEEL SCREWS.
3. COLOR CODES:
   A. NORMAL POWER SYSTEM: LAMINATED BLACK WITH A WHITE CORE WITH ENGRAVED LETTERING.
   B. ESSENTIAL ELECTRICAL SYSTEM (EES): LAMINATED RED WITH A WHITE CORE WITH ENGRAVED LETTERING.
4. IDENTIFICATION SIGNS SHALL INDICATE EQUIPMENT DESIGNATION, RATED BUS AMPERAGE OR MCB RATING, VOLTAGE, NUMBER OF PHASES, NUMBER OF WIRES, AND TYPE OF EES POWER BRANCH AS APPLICABLE.
5. REFER TO SPECIFICATION SECTION 260511.

5 TYPICAL EQUIPMENT NAMEPLATE LOCATIONS DETAIL
NTS

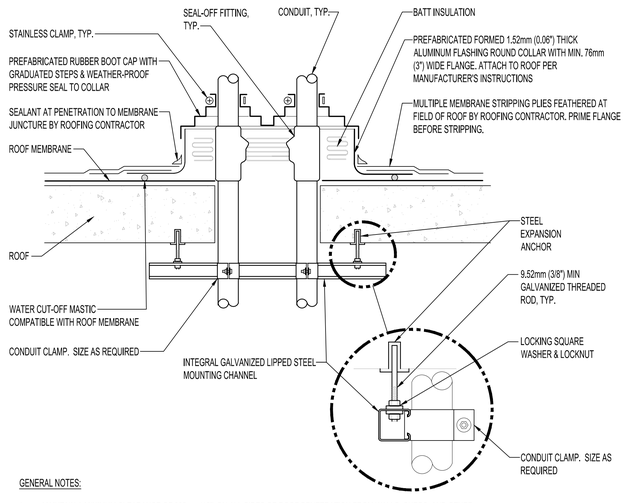

GENERAL NOTES:

1. MAINTAIN A MINIMUM CLEARANCE OF 305mm (12") ON ALL SIDES OF ROOF PENETRATION FROM WALLS, CURBS, AND OTHER PROJECTIONS TO FACILITATE PROPER FLASHING.
2. FLANGES OF ADJACENT FLASHINGS SHALL NOT BE CUT OR OVERLAPPED.
3. VERIFY ROOF & STRUCTURAL SYSTEM WITH ARCHITECT.
4. COORDINATE FLASHING INSTALLATION WITH ROOFING CONTRACTOR TO ENSURE PROPER METHODS & MATERIALS ARE USED TO MAINTAIN ROOF WARRANTY.

3 CONDUIT ROOF PENETRATION DETAIL
NTS

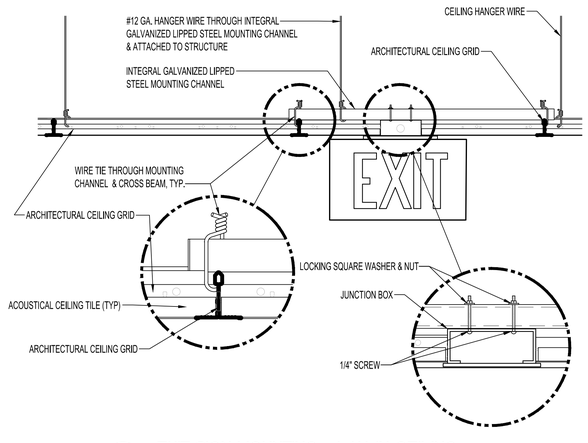

1 EXIT SIGN MOUNTING - LAY-IN CEILING
NTS

Revisions:	Date:
100% CONSTRUCTION + BID DRAWINGS	10/06/2023
100% CONSTRUCTION + BID DRAWINGS	9/28/2023
95% CONSTRUCTION DOCUMENTS	9/01/2023
65% DESIGN DEVELOPMENT	7/27/2023
35% SCHEMATIC DESIGN	6/27/2023

CONSULTANT

ARCHITECT/ENGINEER OF RECORD

BANCROFT ARCHITECTS + ENGINEERS
3300 Dundee RD.
Northbrook, IL 60062
T: 847.952.9362
www.bancroft-ae.com
VA CONTRACT NO. 36C77623C0052
Bancroft Project No. 22-131

STAMP

LICENSED PROFESSIONAL ENGINEER JOSHUA MIKELS 062-072690 10/6/2023 OF ILLINOIS

Office of Construction and Facilities Management

U.S. Department of Veterans Affairs

Drawing Title: ELECTRICAL - DETAILS

Approved: Project Director

Phase: 100% CONSTRUCTION + BID DRAWINGS

Project Title: G.V. (Sonny) Montgomery VAMC EHRM-TASS

Location: G.V. (Sonny) Montgomery VAMC

Issue Date: 10/06/2023

Checked: WG

Drawn: JRM

Project Number: 586-22-703

Building Number: R+E

Drawing Number: E-501

VA FORM 08-6231

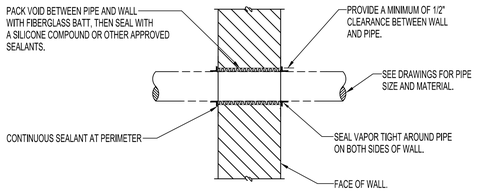

NOTES:

1. I.D. OF WALL OPENING TO BE A MIN. OF 1/2" LARGER THAN O.D. OF PIPE OR INSULATION PASSING THROUGH WALL.
2. CONTRACTOR SHALL BE RESPONSIBLE FOR THE COORDINATION OF THEIR WALL OPENINGS WITH OTHER TRADES AND/OR CONTRACTORS.
3. PIPE PENETRATIONS OF SMOKE OR FIRE WALLS SHALL BE IN COMPLIANCE WITH NFPA-90A.

6 PIPE PENETRATION OF WALL DETAIL

NTS

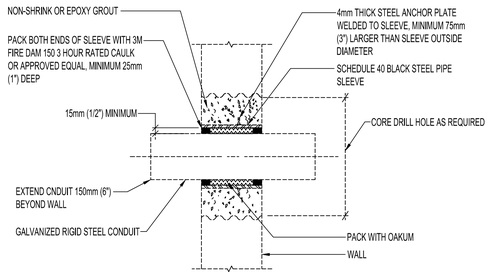

4 PIPE SLEEVE THRU WALL DETAIL

NTS

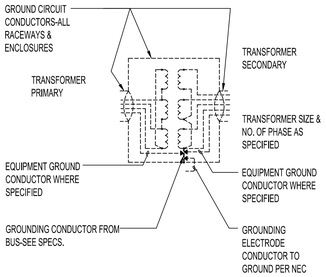

2 DRY TYPE TRANSFORMER (600V OR LESS) GROUNDING

NTS

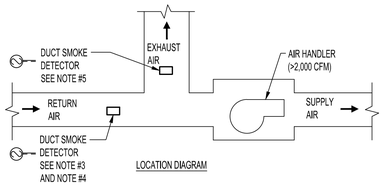

LOCATION DIAGRAM

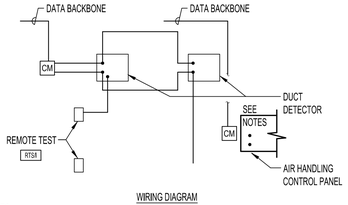

WIRING DIAGRAM

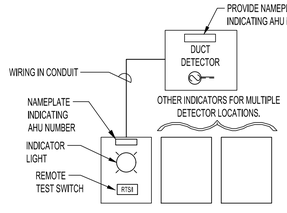

NOTES:

1. WIRE INTO HVAC CONTROL PANEL OR STARTER TO SHUT DOWN AIR HANDLER IN THE EVENT SMOKE IS DETECTED. PROVIDE OVERRIDE SWITCH (KEYED SWITCH OR START PUSH-BUTTON STATION IN LOCKED ENCLOSURE) ADJACENT TO FACP TO RESTART THE HVAC UNIT. PROVIDE WRITTEN STATEMENT TO DSF CONSTR. REP. THAT THE SYSTEM WAS TESTED AND OPERATES CORRECTLY.
2. MOUNT REMOTE TEST STATION ON NEAREST WALL THAT PROVIDES ACCESS. IN INSTALLATIONS WHERE TWO OR MORE AHU'S ARE INSTALLED TOGETHER, MOUNT ALL TEST SWITCHES IN ONE AREA.
3. DUCT SMOKE DETECTORS SHALL BE INSTALLED IN RETURN AIR SYSTEMS WITH A CAPACITY GREATER THAN 2,000 CFM, IN THE RETURN AIR DUCT OR PLENUM UPSTREAM OF ANY FILTERS, EXHAUST AIR CONNECTIONS, OUTDOOR AIR CONNECTIONS, OR DECONTAMINATION EQUIPMENT AND APPLIANCES.
4. WHERE RETURN AIR RISERS SERVE TWO OR MORE STORIES AND ARE PART OF A RETURN AIR SYSTEM HAVING A CAPACITY GREATER THAN 15,000 CFM, DUCT SMOKE DETECTORS SHALL BE INSTALLED AT EACH STORY. SUCH DUCT SMOKE DETECTORS SHALL BE LOCATED UPSTREAM OF THE CONNECTION BETWEEN THE RETURN AIR RISER AND ANY AIR DUCTS OR PLENUMS.
5. FOR HIGH RISE BUILDINGS, IN ADDITION TO THE DUCT SMOKE DETECTOR IN THE MAIN RETURN AIR DUCT, PROVIDE A DUCT SMOKE DETECTOR IN THE EXHAUST AIR PLENUM OF EACH A/C SYSTEM HAVING A CAPACITY GREATER THAN 2,000 CFM.
6. THE ACTUATION OF A DUCT SMOKE DETECTOR SHALL ACTIVATE A VISIBLE AND AUDIBLE SUPERVISORY SIGNAL AT A CONSTANTLY ATTENDED LOCATION (CAMPUS POLICE AND SECURITY)

5 AIR HANDLING SHUTDOWN DETAIL

NTS

INPUT DEVICE ↓ / OUTPUT →	ACTIVATE BUILDING AUDIBLE NOTIFICATION APPLIANCES	ACTIVATE BUILDING FIRE ALARM VISUAL NOTIFICATION APPLIANCES	ANNUNCIATE ALARM TYPE AND ADDRESS AT FIRE ALARM CONTROL PANEL (FACP)	TRANSMIT FIRE ALARM SIGNAL TO FIRE DEPARTMENT	INITIATE SUPERVISORY SIGNAL TO A 24-HOUR MANNED POINT	CLOSE SMOKE BARRIER DOORS ON THE FLOOR OF ALARM	SHUT DOWN ASSOCIATED AIR HANDLING UNIT	INITIATE ELEVATOR RECALL	INITIATE ELEVATOR SHUT DOWN AND DISCONNECT ELEVATOR POWER.	ACTIVATE ALARM AT ANNUNCIATOR PANEL	OPEN LOCKED EGRESS DOOR	RELEASE DOOR OPEN BY MAGNETIC DOOR HOLDER
MANUAL PULL STATION	X	X	X	X						X		X
AREA SMOKE DETECTOR	X	X	X	X						X		X
ELEVATOR SMOKE DETECTOR	X	X	X	X				X				
DUCT SMOKE DETECTOR					X		X	X				

3 FIRE ALARM SYSTEM INPUT OUTPUT MATRIX

NTS

X FIRE ALARM RISER NOTES

1. EXISTING FA CIRCUITS TO BE RE-USED. IF REQUIRED TO POWER NEW DEVICES, PROVIDE NEW FIRE ALARM NAC IN TR AND CONNECT TO EXITING FACP LOCATED IN VESTIBULE 102.
2. SEE FLOOR PLANS FOR QUANTITIES OF DEVICES AND APPLIANCES, TYPICAL.
3. IF NEW NAC IS REQUIRED, CONNECT TO 120V POWER SOURCE FOR PANEL FROM E4L-2. CIRCUIT BREAKER SHALL BE RED IN COLOR AND BE LABELED 'FIRE ALARM CIRCUIT'. MECHANICALLY PROTECT CIRCUIT BREAKER IN THE 'ON' POSITION.
4. SIGNALING LINE CIRCUIT (TSP-#14AWG, 3/4"C).
5. POWER CIRCUIT (TSP-#14AWG, 3/4"C).

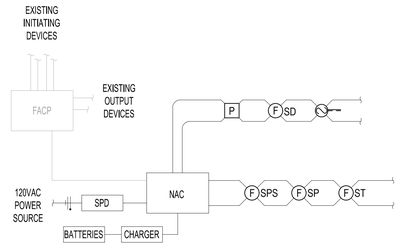

1 FIRE ALARM TYPICAL RISER

NTS

Revisions:	Date:
100% CONSTRUCTION + BID DRAWINGS	10/06/2023
100% CONSTRUCTION + BID DRAWINGS	9/28/2023
95% CONSTRUCTION DOCUMENTS	9/01/2023
65% DESIGN DEVELOPMENT	7/27/2023
35% SCHEMATIC DESIGN	6/27/2023

CONSULTANT

ARCHITECT/ENGINEER OF RECORD

BANCROFT ARCHITECTS + ENGINEERS
3300 Dundee RD.
Northbrook, IL 60062
T: 847.952.9362
www.bancroft-ae.com
VA CONTRACT NO. 36C77623C0052
Bancroft Project No. 22-131

STAMP

LICENSED PROFESSIONAL ENGINEER JOSHUA MIKELS 062-072690 OF ILLINOIS 10/6/2023

Office of Construction and Facilities Management

U.S. Department of Veterans Affairs

Drawing Title: ELECTRICAL - DETAILS

Approved: Project Director

Phase: 100% CONSTRUCTION + BID DRAWINGS

Project Title: G.V. (Sonny) Montgomery VAMC EHRM-TASS

Project Number: 586-22-703

Building Number: R+E

Location: G.V. (Sonny) Montgomery VAMC

Issue Date: 10/06/2023

Checked: WG

Drawn: JRM

Drawing Number: E-502

VA FORM 08-6231

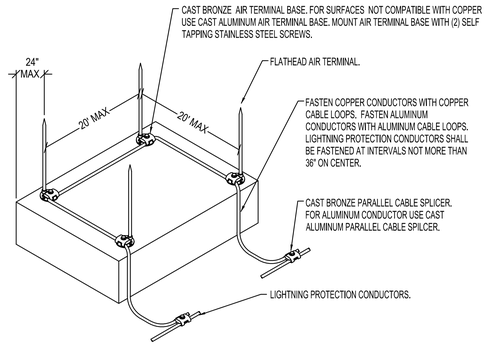

DETAIL NOTES:

1. AIR TERMINAL SPACING SHALL CONFORM TO NFPA 780 & UL 96A REQUIREMENTS.
2. MATERIAL COMPATIBILITY SHALL CONFORM TO NFPA 780 & 96A REQUIREMENT.
3. MATERIAL CLASS SHALL CONFORM TO NFPA 780 & UL 96A REQUIREMNTS.
4. AIR TERMINALS SHALL BE UL LISTED & CAL-OSHA APPROVED.

4 ROOF TOP EQUIPMENT PROTECTION DETAIL
NTS

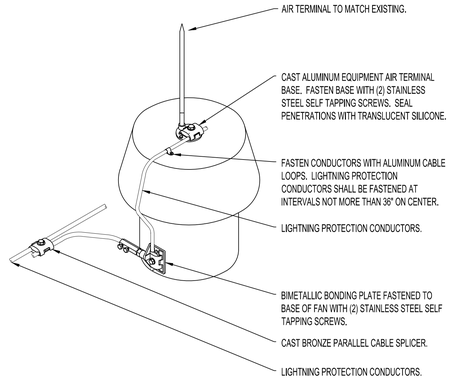

2 AIR TERMINAL EXHAUST FAN MOUNTING DETAIL
NTS

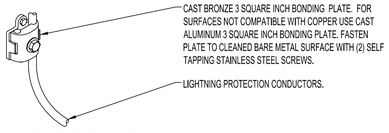

EQUIPMENT BONDING

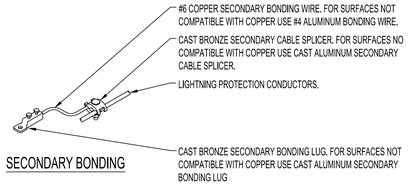

SECONDARY BONDING

3 TYPICAL BONDING DETAILS
NTS

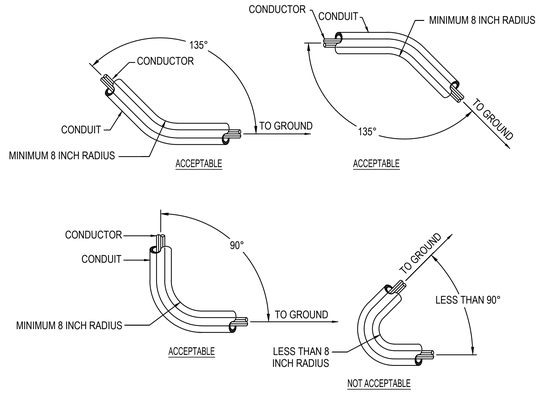

1 BENDING REQUIREMENTS DETAIL
NTS

100% CONSTRUCTION + BID DRAWINGS	10/06/2023
100% CONSTRUCTION + BID DRAWINGS	9/28/2023
95% CONSTRUCTION DOCUMENTS	9/01/2023
65% DESIGN DEVELOPMENT	7/27/2023
35% SCHEMATIC DESIGN	6/27/2023
Revisions:	Date:

CONSULTANT

ARCHITECT/ENGINEER OF RECORD

BANCROFT ARCHITECTS + ENGINEERS
3300 Dundee RD.
Northbrook, IL 60062
T: 847.952.9362
www.bancroft-ae.com
VA CONTRACT NO. 36C77623C0052
Bancroft Project No. 22-131

STAMP

LICENSED PROFESSIONAL ENGINEER JOSHUA MIKELS 062-072690 OF ILLINOIS 10/6/2023

Office of Construction and Facilities Management

U.S. Department of Veterans Affairs

Drawing Title: ELECTRICAL - DETAILS

Approved: Project Director

Phase: 100% CONSTRUCTION + BID DRAWINGS

Project Title: G.V. (Sonny) Montgomery VAMC EHRM-TASS

Location: G.V. (Sonny) Montgomery VAMC

Issue Date: 10/06/2023 | Checked: WG | Drawn: JRM

Project Number: 586-22-703

Building Number: R+E

Drawing Number: E-503

VA FORM 08-6231

EQUIPMENT SCHEDULE

EQUIPMENT TAG	EQUIPMENT NAME & INFO	LOCATION	LOAD			CONDUIT AND WIRE SIZE	SOURCE OF POWER			KAIC	STARTER		DISCONNECT		REMARKS
			VOLTS	PHASE	MCA / HP		PANEL/BUS	CKT. NO.	BKR SIZE		SIZE	TYPE	SIZE	TYPE	
AHU-4	AIR HANDLING UNIT	ROOF	480	3	SUP - 31.5 A RET - 24.75 A	(3) #8, (1) #10G AWG CU IN 1" C (3) #10, (1) #10G AWG CU IN 3/4" C	5-H-P	#(1,3,5) #(7,9,11)	45/3 35/3	MATCH SOURCE PANEL	FACTORY INSTALLED VFDs		FACTORY INSTALLED		PROVIDE (2) 120V SINGLE PHASE CIRCUITS FOR AUXILIARY EQUIPMENT. SEE FLOOR PLAN FOR DETAILS. CONTRACTOR TO DOCUMENT PANEL AND CIRCUIT AFTER CONSTRUCTION IN PANEL DIRECTORY AS WELL AS RECORD DRAWINGS. PROVIDE 3/4" CONDUIT TO DDC PANEL. PROVIDE DUCT MOUNTED SMOKE DETECTORS. VFD PROVIDED BY MECHANICAL CONTRACTOR, INSTALLED BY ELECTRICAL CONTRACTOR.
DFSS-402.1 CU-402.1	DUCT FREE SPLIT SYSTEM	INDOOR UNIT - ROOM TR 402 OUTDOOR UNIT - ROOF	208	1	20 A	(2) #8, (1) #10G AWG CU IN 3/4"C	E4L-2	#(8,10)	35/2	MATCH SOURCE PANEL	N/A		30A NON-FUSED NEMA 3R		BRANCH CIRCUIT SHOWN IS SUPPLIED TO OUTDOOR UNIT. PROVIDE AND INSTALL DISCONNECT ON INDEPENDANTLY SUPPORTED UNISTRUT AT LOCATION OF OUTDOOR UNIT. CONTRACTOR SHALL PROVIDE AND INSTALL 12/3 POWER+COMMUNICATION WIRING FROM OUTDOOR UNIT TO INDOOR UNIT. POWER FOR THE INDOOR UNIT IS FROM 12/2+G. A SEPARATE SHIELDED STRANDED CU CONDUCTOR (600V) WITH DOUBLE INSULATION MUST BE USED AS THE COMMUNICATION WIRE. INTERCONNECT OUTDOOR UNIT AND INDOOR UNIT PER MANUFACTURER INSTRUCTIONS.
DFSS-402.1 CU-402.2	DUCT FREE SPLIT SYSTEM	INDOOR UNIT - ROOM TR 402 OUTDOOR UNIT - ROOF	208	1	20 A	(2) #8, (1) #10G AWG CU IN 3/4"C	L4L-3	#(8,10)	35/2	MATCH SOURCE PANEL	N/A		30A NON-FUSED NEMA 3R		BRANCH CIRCUIT SHOWN IS SUPPLIED TO OUTDOOR UNIT. PROVIDE AND INSTALL DISCONNECT ON INDEPENDANTLY SUPPORTED UNISTRUT AT LOCATION OF OUTDOOR UNIT. CONTRACTOR SHALL PROVIDE AND INSTALL 12/3 POWER+COMMUNICATION WIRING FROM OUTDOOR UNIT TO INDOOR UNIT. POWER FOR THE INDOOR UNIT IS FROM 12/2+G. A SEPARATE SHIELDED STRANDED CU CONDUCTOR (600V) WITH DOUBLE INSULATION MUST BE USED AS THE COMMUNICATION WIRE. INTERCONNECT OUTDOOR UNIT AND INDOOR UNIT PER MANUFACTURER INSTRUCTIONS.
EF-4	EXHAUST FAN	ROOF	120	1	7.25 A	(2) #12, (1) #12G AWG CU IN 3/4"C	5-L-P	#19	15/1	MATCH SOURCE PANEL	VFD		NEMA 1 HPRS		DISCONNECT AND VFD PROVIDED BY MECHANICAL CONTRACTOR, INSTALLED BY ELECTRICAL CONTRACTOR. REFERTO PLANS FOR VFD LOCATION. DISCONNECT TO BE MOUNTED AT FAN LOCATION.
HWP-4.1	HOT WATER PUMP	5TH FLOOR MECHANICAL ROOM	480	3	3/4 HP	(3) #12, (1) #12G AWG CU IN 3/4"C	5-H-P	#(2,4,6)	15/3	MATCH SOURCE PANEL	VFD		30/3 NEMA 1		VFD PROVIDED BY MECHANICAL CONTRACTOR, INSTALLED BY ELECTRICAL CONTRACTOR. DISCONNECT PROVIDED AND INSTALLED BY ELECTRICAL CONTRACTOR. REFER TO PLANS FOR VFD LOCATION. DISCONNECT SHALL BE MOUNTED ON INDEPENDANTLY SUPPORTED UNISTRUT AT LOCATION OF PUMP/MOTOR.
HWP-4.2	HOT WATER PUMP	5TH FLOOR MECHANICAL ROOM	480	3	3/4 HP	(3) #12, (1) #12G AWG CU IN 3/4"C	5-H-P	#(8,10,12)	15/3	MATCH SOURCE PANEL	VFD		30/3 NEMA 1		VFD PROVIDED BY MECHANICAL CONTRACTOR, INSTALLED BY ELECTRICAL CONTRACTOR. DISCONNECT PROVIDED AND INSTALLED BY ELECTRICAL CONTRACTOR. REFER TO PLANS FOR VFD LOCATION. DISCONNECT SHALL BE MOUNTED ON INDEPENDANTLY SUPPORTED UNISTRUT AT LOCATION OF PUMP/MOTOR.

NOTES

1.) IF NOT PROVIDED BY MANUFACTURER: CURRENT DRAW RATINGS BASED ON NEC TABLE 430.250 ; OCPD FUSE RATINGS BASED ON NEC TABLE 430.52 AT NO MORE THAN 175% OF FULLY RATED CURRENT ; OCPD CB RATINGS BASED ON SQUARE D SLIDE RULE TABLE AND NEC TABLE 430.52 AT NO MORE THAN 250% OF FULLY RATED CURRENT.

LIGHT FIXTURE SCHEDULE - *ALL FIXTURE SELECTIONS AND NOTES TBD BASED ON INPUT FROM VA STANDARD FIXTURE SELECTIONS*

TAG	DESCRIPTION	MANUFACTURER	CATALOG #	OR EQUAL BY	COLOR TEMP	LUMENS	INPUT WATTS	DIMMABLE	VOLTAGE	COLOR	MOUNTING	NOTES
A	2X2 PANEL LED	DAYBRITE	2FPZ-38B-835-2-DS-UNV-DIM-BAC	COLUMBIA COOPER TGS	3500K	~3800	36W	YES 0-10V	UNIV	WHITE	LAY-IN	
B	2X2 PANEL LED	DAYBRITE	2FPZ-30L-835-2-DS-UNV-DIM-BAC	COLUMBIA COOPER TGS	3500K	~3000	27W	YES 0-10V	UNIV	WHITE	LAY-IN	
C	4' STRIP LED	DAYBRITE	FSS-4-30L-835-UNV-DIM-BAC / FKR-126 / FSSWG4	COLUMBIA COOPER TGS	3500K	~3000	21.8W	YES 0-10V	UNIV	WHITE	CHAIN HUNG	
S	2' STRIP LED	DAYBRITE	FSW-2-20L-835-UNV-DIM-BAC	COLUMBIA COOPER TGS	3500K	~2000	16W	YES 0-10V	UNIV	WHITE	WALL	
X	DIECAST LED EXIT SIGN	BEGHELLI	LC1-E-HT-LR-U-AL-AL-USA	PATHWAY EMERGILITE PRESCOLITE	-	-	2W	NO	UNIV	ALUMINUM W/RED TEXT	WALL OR CEILING AS INDICATED	PROVIDE ARROW AND FACES AS PER PLANS, SELF DIAGNOSTICS.

NOTES

PROVIDE UL924 RELAY FOR ALL FIXTURES WITH HALF FILLED IN CENTER (PLAN SYMBOL) OR SUBSCRIPT EM. EM FIXTURES THAT ARE SWITCHED SHALL BYPASS LOCALL CONTROLS AND TURN ON/REMAIN ON.
PROVIDE 0-10V WIRES FROM SWITCH/CONTROLLER TO ALL 0-10V DIMMABLE FIXTURES.
IF THERE IS A DISCREPANCY BETWEEN THE NOTES AND THE CATALOG NUMBER, THE NOTES SHALL PREVAIL.
PRIOR APPROVAL SUBMITTALS FOR MANUFACTURERS NOT LISTED MUST BE SUBMITTED TO THE ENGINEER 14 DAYS PRIOR TO BID DATE FOR REVIEW.
MANUFACTURERS NOT LISTED WILL NOT BE ACCEPTED UNLESS APPROVED BY ADDENDUM PRIOR TO BID.
CONTRACTOR TO PROVIDE ALL OPTIONS AND ACCESSORIES AS REQUIRED TO INSTALL LUMINAIRE IN VARYING CEILING TYPES AS SHOWN ON PLANS.

100% CONSTRUCTION + BID DRAWINGS	10/06/2023
100% CONSTRUCTION + BID DRAWINGS	9/28/2023
95% CONSTRUCTION DOCUMENTS	9/01/2023
65% DESIGN DEVELOPMENT	7/27/2023
35% SCHEMATIC DESIGN	6/27/2023
Revisions:	Date:

CONSULTANT

ARCHITECT/ENGINEER OF RECORD

BANCROFT ARCHITECTS + ENGINEERS
3300 Dundee RD.
Northbrook, IL 60062
T: 847.952.9362
www. bancroft-ae.com
VA CONTRACT NO. 36C77623C0052
Bancroft Project No. 22-131

STAMP

LICENSED PROFESSIONAL ENGINEER JOSHUA MIKELS 062-072690 10/6/2023 STATE OF ILLINOIS

Office of Construction and Facilities Management

U.S. Department of Veterans Affairs

Drawing Title: ELECTRICAL - SCHEDULES

Approved: Project Director

Phase: 100% CONSTRUCTION + BID DRAWINGS

Project Title: G.V. (Sonny) Montgomery VAMC EHRM-TASS

Location: G.V. (Sonny) Montgomery VAMC

Issue Date: 10/06/2023

Checked: WG

Drawn: JRM

Project Number: 586-22-703

Building Number: R+E

Drawing Number: E-601

VA FORM 08-6231

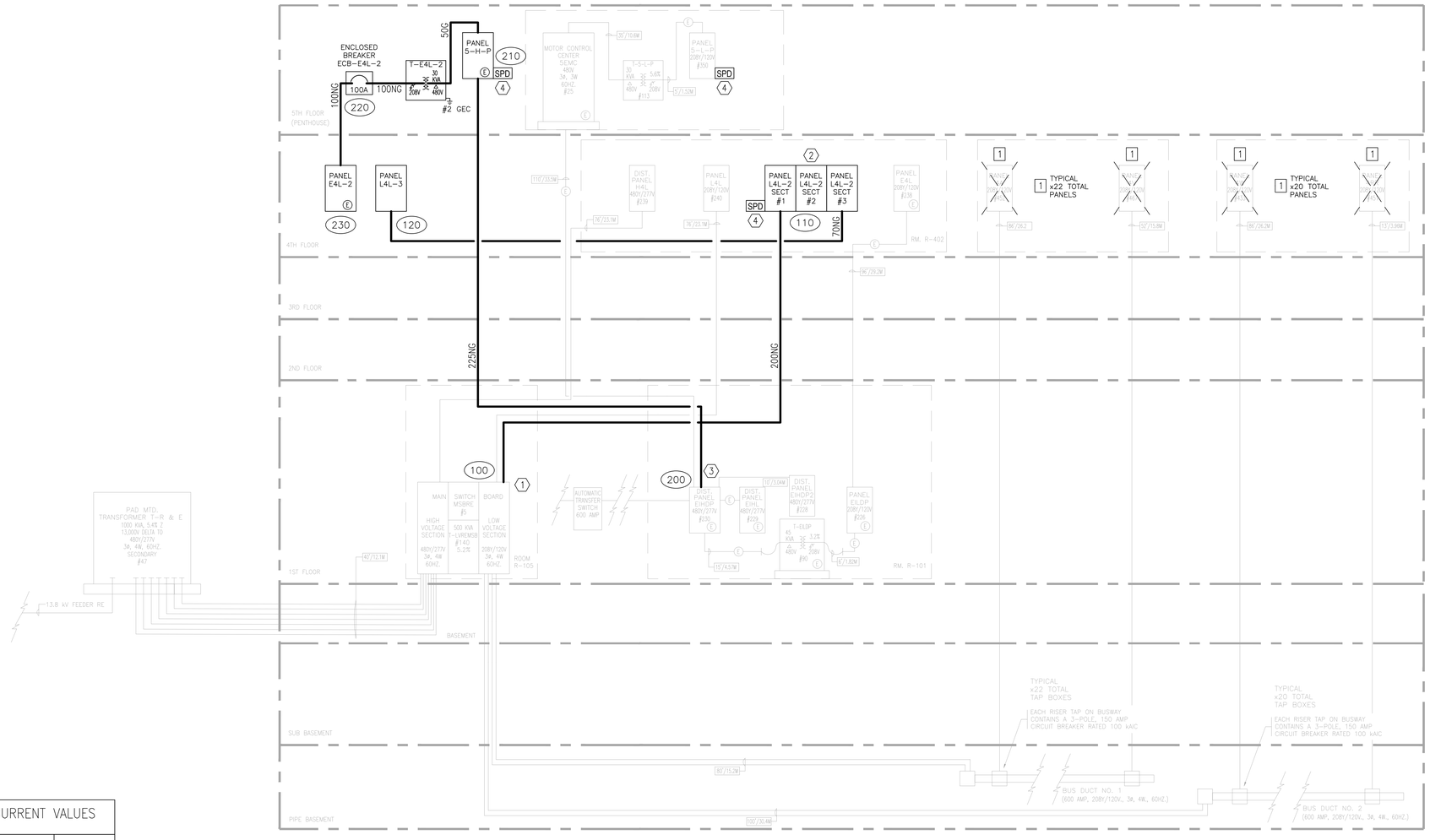

GENERAL NOTES

A. SINGLE LINE DIAGRAM DOES NOT SHOW ALL PANELS IN THE BUILDING. EXISTING ITEMS ARE SHOWN WITH LIGHT LINES. NEW WORK IS SHOWN WITH BOLD LINES.

Ⓔ = EMERGENCY BRANCH

[X] DEMO KEYNOTES

1. REMOVE EXISTING PANEL. REMOVE FEEDERS RELEASED FROM SERVICE BACK TO BUS DUCT IN PIPE BASEMENT. REMOVE CONDUIT WHERE POSSIBLE. COORDINATE WITH VA FOR CONDUIT TO ABANDONED IN PLACE IN CHASE.

(X) NEW WORK KEYNOTES

1. PROVIDE NEW 200/3 BREAKER IN LOW VOLTAGE SECTION OF EXISTING SQUARE-D POWER-STYLE SWITCHBOARD. BREAKER SHALL MATCH TYPE AND AIC RATING OF EXISTING BREAKERS. PROVIDE 200-AMP FEEDER TO NEW PANEL ON THE 4TH FLOOR. FEEDER SHALL BE 4#3/0, #6G, 2"C.
2. MULTI-SECTION PANEL SHALL BE PROVIDED WITH FEED-THRU LUGS. PANEL SHALL HAVE (3) SECTIONS WITH 4#3/0, #6G, 2"C BETWEEN EACH SECTION. REFER TO FLOOR PLAN AND PANEL SCHEDULES FOR MORE INFORMATION.
3. UTILIZE EXISTING 225/3 SPARE BREAKER IN 'EIHDP' (BREAKER #11) AND PROVIDE NEW FEEDER FROM DISTRIBUTION PANEL TO NEW PANEL IN PENTHOUSE. FEEDER SHALL BE 4#4/0, #4G, 2-1/2" C. EXISTING PANEL IS SQUARE-D I-LINE HCW.
4. REFER TO PANEL SCHEDULES FOR MORE INFORMATION RELATED TO SURGE PROTECTIVE DEVICE.

FAULT CURRENT VALUES

LOCATION (###)	3 PHASE (AMPS)	LINE TO GROUND (AMPS)
100	17,176	19,357
110	6,274	4,432
120	4,359	2,829
200	11,418	8,166
210	7,179	4,874
220	1,733	1,773
230	1,153	944

NOTES:
1. STARTING VALUES AT LOCATIONS 100 AND 200 TAKEN FROM RECORD DOCUMENT – REPORT NO. 340-003-001, REV. 0
2. REFER TO DRAWING E-702 FOR CALCULATION INPUTS

COPPER FEEDER SCHEDULE

FEEDER DESIGNATION	No. OF SETS	PHASE CONDUCTORS (PER SET)	N NEUTRAL CONDUCTOR (PER SET)	G GROUND CONDUCTOR (PER SET)	SG SYSTEM BONDING JUMPER (PER SET)	P PARTIAL NEUTRAL SERVICE CONDUCTOR (PER SET)	I ISOLATED GROUND CONDUCTOR (PER SET)	CONDUIT SIZE – CONDUIT TYPES EMT, FMC, LFMC, IMC, RMC, SCH 40 PVC: 3 PHASE NEUTRAL & GROUND 'NG','NSG' 'PG','PSG' (PER SET)	3 PHASE & GROUND 'G' (PER SET)	3 PHASE NEUTRAL, GROUND & ISOLATED GROUND 'NGI','NSGI' (PER SET)	CONDUIT SIZE – CONDUIT TYPES SCH 80 PVC: 3 PHASE NEUTRAL & GROUND 'NG','NSG' 'PG','PSG' (PER SET)	3 PHASE & GROUND 'G' (PER SET)	3 PHASE NEUTRAL, GROUND & ISOLATED GROUND 'NGI','NSGI' (PER SET)
40/50	1	3 # 8	1 # 8	1 # 10	1 # 8		1 # 10	3/4"	3/4"	1"	1"	3/4"	1"
60	1	3 # 6	1 # 6	1 # 10	1 # 8		1 # 10	1"	3/4"	1"	1"	1"	1 1/4"
70/80	1	3 # 4	1 # 4	1 # 8	1 # 8		1 # 8	1 1/4"	1"	1 1/4"	1 1/4"	1 1/4"	1 1/4"
100	1	3 # 2	1 # 2	1 # 8	1 # 8	1 # 8	1 # 8	1 1/4"	1 1/4"	1 1/2"	1 1/2"	1 1/4"	1 1/2"
115	1	3 # 2	1 # 2	1 # 6	1 # 8	1 # 8	1 # 6	1 1/4"	1 1/4"	1 1/2"	1 1/2"	1 1/4"	1 1/2"
130	1	3 # 1	1 # 1	1 # 6	1 # 6	1 # 6	1 # 6	1 1/2"	1 1/2"	1 1/2"	2"	1 1/2"	2"
150	1	3 # 1/0	1 # 1/0	1 # 6	1 # 6	1 # 6	1 # 6	2"	1 1/2"	2"	2"	1 1/2"	2"
175	1	3 # 2/0	1 # 2/0	1 # 6	1 # 4	1 # 4	1 # 6	2"	1 1/2"	2"	2"	2"	2"
200	1	3 # 3/0	1 # 3/0	1 # 6	1 # 2	1 # 4	1 # 6	2"	2"	2"	2 1/2"	2"	2 1/2"
225	1	3 # 4/0	1 # 4/0	1 # 4	1 # 2	1 # 2	1 # 4	2 1/2"	2"	2 1/2"	2 1/2"	2"	2 1/2"

EXAMPLES:
1. 150NG = INDICATES 1 SET OF 4# 1/0 + 1# 6 GROUND CONDUCTOR IN 2"C PER SET.
2. 500PG = INDICATES 2 SETS OF 3 # 250KCMIL AND 1 # 1/0 PARTIAL NEUTRAL CONDUCTOR IN 2 1/2" PER SET.

Revisions:	Date:
100% CONSTRUCTION + BID DRAWINGS	10/06/2023
100% CONSTRUCTION + BID DRAWINGS	9/28/2023
95% CONSTRUCTION DOCUMENTS	9/01/2023
65% DESIGN DEVELOPMENT	7/27/2023
35% SCHEMATIC DESIGN	6/27/2023

CONSULTANT

ARCHITECT/ENGINEER OF RECORD
BANCROFT ARCHITECTS + ENGINEERS
3300 Dundee RD.
Northbrook, IL 60062
T: 847.952.9362
www.bancroft-ae.com
VA CONTRACT NO. 36C77623C0052
Bancroft Project No. 22-131

STAMP
LICENSED PROFESSIONAL ENGINEER JOSHUA MIKELS 062-072690 10/6/2023 OF ILLINOIS

Office of Construction and Facilities Management
U.S. Department of Veterans Affairs

Drawing Title: ELECTRICAL - SINGLE LINE DIAGRAM
Approved: Project Director
Phase: 100% CONSTRUCTION + BID DRAWINGS
Project Title: G.V. (Sonny) Montgomery VAMC EHRM-TASS
Project Number: 586-22-703
Building Number: R+E
Location: G.V. (Sonny) Montgomery VAMC
Issue Date: 10/06/2023
Checked: WG
Drawn: JRM
Drawing Number: E-701

VA FORM 08-6231

NORMAL BRANCH SWITCHBOARD MSBRE (208V SECTION):

1. DELETED LOAD:
   1.1. ~15,000 VA LIGHTING FROM PANEL H4L
   1.2. ~5,400 VA RECEPTACLES FROM PANEL L4L
   1.3. ~36,000 VA FROM (40) PANELS FED FROM BUS DUCTS
2. NEW LOAD (CONNECTED):
   2.1. 52,058 VA (FROM NEW PANEL L4L-2)
3. NET LOAD ON MSBRE = DECREASE OF ~4,000 VA

NORMAL BRANCH PANEL H4L:

1. NET LOAD DECREASE
2. REMOVAL OF ALL EXISTING FLUORESCENT LIGHTING
3. ONLY NEW CORRIDOR LIGHTING CIRCUITED TO THIS PANEL – REPLACED WITH LEDs

NORMAL BRANCH PANEL L4L:

1. NET LOAD DECREASE
2. RECEPTACLES REMOVED FROM THIS PANEL
3. NO NEW LOADS CIRCUITED TO THIS PANEL

EMERGNCY BRANCH PANEL E1HDP:

1. DELETED LOAD:
   1.1. ~6,300 VA – FROM 5-L-P AND E4L (SEE DETAILS BELOW)
2. NEW LOAD (CONNECTED):
   2.1. 56,060 VA (FROM NEW PANEL 5-H-P)
3. NET LOAD = INCREASE OF ~50,000 VA (60 AMPS @ 480V)
4. EXISTING LOAD ON E1HDP:
   4.1. PANELS EUBA THRU EUBH + EUBX ~135 AMPS
   4.2. MCC 1EMC ~40 AMPS
   4.3. MCC 5EMC2 ~90 AMPS
   4.4. PANEL E1HL ~31 AMPS
   4.5. CHILLER ROOM FIRE PUMP ~83 AMPS
   4.6. TRANSFORMER FOR E1LDP ~35 AMPS
5. NET LOAD INCREASE + EXISTING LOAD = ~474 AMPS
   5.1. E1HDP HAS IS A 600 AMP PANEL
   5.2. NEW LOAD IS ACCEPTABLE AND DOES NOT OVERLOAD PANEL

EMERGNCY BRANCH PANEL 5-L-P:

1. DELETED LOAD:
   1.1. ~3,000 VA – (3) EXHAUST FANS
2. NEW LOAD:
   2.1. 1,736 VA
3. NET LOAD = DECREASE OF ~1,200 VA

EMERGENCY BRANCH PANEL PANEL E4L:

1. DELETED LOAD:
   1.1. ~3,000 VA – RECEPTACLES
   1.2. ~300 VA – LIGHTING
2. NEW LOAD:
   2.1. 1,670 VA
3. NET LOAD = DECREASE OF ~1,600 VA

2 EXISTING PANEL LOAD CALCULATIONS

NOTE: EXISTING LOAD DATA GATHERED FROM A COMBINATION OF AS-BUILT DRAWINGS, FIELD SURVEYS, AND VA REPORT NO. 340-003-001, REV. 0

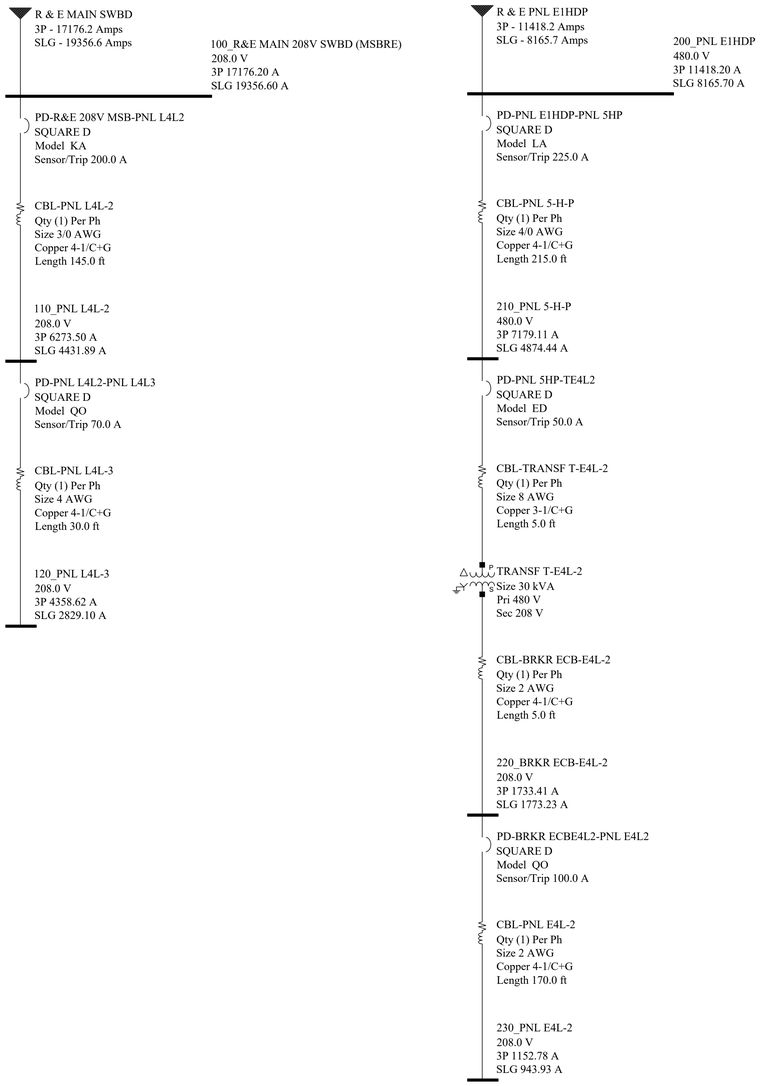

1 FAULT CURRENT CALCULATION INPUTS

NTS

100% CONSTRUCTION + BID DRAWINGS	10/06/2023
100% CONSTRUCTION + BID DRAWINGS	9/28/2023
95% CONSTRUCTION DOCUMENTS	9/01/2023
65% DESIGN DEVELOPMENT	7/27/2023
35% SCHEMATIC DESIGN	6/27/2023
Revisions:	Date:

CONSULTANT

ARCHITECT/ENGINEER OF RECORD

BANCROFT ARCHITECTS + ENGINEERS
3300 Dundee RD.
Northbrook, IL 60062
T: 847.952.9362
www.bancroft-ae.com
VA CONTRACT NO. 36C77623C0052
Bancroft Project No. 22-131

STAMP

LICENSED PROFESSIONAL ENGINEER JOSHUA MIKELS 062-072690 10/6/2023 OF ILLINOIS

Office of Construction and Facilities Management

VA U.S. Department of Veterans Affairs

Drawing Title: ELECTRICAL - SINGLE LINE DIAGRAM CALCULATIONS

Approved: Project Director

Phase: 100% CONSTRUCTION + BID DRAWINGS

Project Title: G.V. (Sonny) Montgomery VAMC EHRM-TASS

Location: G.V. (Sonny) Montgomery VAMC

Issue Date: 10/06/2023 | Checked: WG | Drawn: JRM

Project Number: 586-22-703

Building Number: R+E

Drawing Number: E-702

VA FORM 08-6231

NEW PANEL E4L-2

VOLTAGE : 120/208 VOLTS 3 PHASE, 4 WIRE
BUS RATING : 100 AMPS
MAIN : MLO (100 AMP FEEDER)
BRANCHTYPE: EMERGENCY BRANCH

CB OPT: ST - SHUNT TRIP
AF - ARC FAULT CIRCUIT INTERRUPTER
GF - GROUND FAULT
FR - 100% RATED
L - LOCKABLE
EP - EQUIPMENT GROUND FAULT (30mA)

10kA **AIC RATING**
SPECIAL OPTIONS

LOAD TYPE	LOAD (VA)	CNKOT	LOAD SERVED	CB AMP/P	COBP T	PHASE A	B	C	COBP T	CB AMP/P	LOAD SERVED	CNKOT	LOAD (VA)	LOAD TYPE
MISC	500	1	ACCESS CNTRL PS	20/1		A				20/3	TR RACK	2	1900	MISC
RECEPTACLE	360	3	RECEPTACLE	20/1			B			--	--	4	1900	MISC
RECEPTACLE	360	5	RECEPTACLE	20/1				C		--	--	6	1900	MISC
LIGHTING	44	7	LIGHTING	20/1		A				35/2	CU-402 1/DFSS-402.1	8	1664	MOTOR
		9	SPARE	20/1			B			--	--	10	1664	MOTOR
		11	SPARE	20/1				C		20/1	SPARE	12		
		13	SPACE			A				20/3	TR RACK	14	1900	MISC
		15	SPACE				B			--	--	16	1900	MISC
		17	SPACE					C		--	--	18	1900	MISC
		19	SPACE			A					SPACE	20		
		21	SPACE				B				SPACE	22		
		23	SPACE					C			SPACE	24		
		25	SPACE			A					SPACE	26		
		27	SPACE				B				SPACE	28		
		29	SPACE					C			SPACE	30		

EXISTING METERED LOAD X 125%	PHASE A	PHASE B	PHASE C (VA)

PANEL CALCULATIONS:

LOAD TYPE	LOAD (VA)	DEMAND FACTOR	DEMAND LOAD	
RECEPTACLE	720	PER NEC ARTICLE 220.44	720	VA
LIGHTING	44	125%	55	VA
MOTOR	3328	100%	3328	VA
HEAT	0	100%	0	VA
MISC	11900	100%	11900	VA
25% OF LARGEST MOTOR			832	VA

FEED THROUGH PANEL — LOAD (kVA)

SUB FEED LOADS	AMP/P	LOAD	LOAD TYPE

LOAD SUMMARY

Phase Loading	
Phase A	6 kVA
Phase B	6 kVA
Phase C	4 kVA
Total Connected Load	16 kVA
Total Demand Load	17 kVA
Line to Line Voltage	208 VOLTS
Spare Capacity	20%
Panel Amps	56 AMPS

PANEL SCHEDULE NOTE:

- PANEL SHALL BE EQUIPPED WITH A POWER METER. METER SHALL BE AS PER SPECIFICATION SECTION 26 24 16, SECTION 2.5. METER SHALL BE CONNECTED TO A FUTURE POWER MONITORING SYSTEM.

NEW PANEL L4L-3

VOLTAGE : 120/208 VOLTS 3 PHASE, 4 WIRE
BUS RATING : 100 AMPS
MAIN : MLO (70 AMP FEEDER)
BRANCHTYPE: NORMAL BRANCH

CB OPT: ST - SHUNT TRIP
AF - ARC FAULT CIRCUIT INTERRUPTER
GF - GROUND FAULT
FR - 100% RATED
L - LOCKABLE
EP - EQUIPMENT GROUND FAULT (30mA)

10kA **AIC RATING**
SPECIAL OPTIONS

LOAD TYPE	LOAD (VA)	CNKOT	LOAD SERVED	CB AMP/P	COBP T	PHASE A	B	C	COBP T	CB AMP/P	LOAD SERVED	CNKOT	LOAD (VA)	LOAD TYPE
RECEPTACLE	360	1	RECEPTACLE	20/1		A				20/3	TR RACK	2	1900	MISC
RECEPTACLE	360	3	RECEPTACLE	20/1			B			--	TR RACK	4	1900	MISC
RECEPTACLE	360	5	RECEPTACLE	20/1				C		--	TR RACK	6	1900	MISC
LIGHTING	22	7	LIGHTING	20/1		A				35/2	CU-402 2/DFSS-402.2	8	1664	MOTOR
		9	SPARE	20/1			B			--	--	10	1664	MOTOR
		11	SPARE	20/1				C		20/1	SPARE	12		
		13	SPACE			A				20/3	TR RACK	14	1900	MISC
		15	SPACE				B			--	TR RACK	16	1900	MISC
		17	SPACE					C		--	TR RACK	18	1900	MISC
		19	SPACE			A					SPACE	20		
		21	SPACE				B				SPACE	22		
		23	SPACE					C			SPACE	24		
		25	SPACE			A					SPACE	26		
		27	SPACE				B				SPACE	28		
		29	SPACE					C			SPACE	30		

EXISTING METERED LOAD X 125%	PHASE A	PHASE B	PHASE C (VA)

PANEL CALCULATIONS:

LOAD TYPE	LOAD (VA)	DEMAND FACTOR	DEMAND LOAD	
RECEPTACLE	1080	PER NEC ARTICLE 220.44	1080	VA
LIGHTING	22	125%	28	VA
MOTOR	3328	100%	3328	VA
HEAT	0	100%	0	VA
MISC	11400	100%	11400	VA
25% OF LARGEST MOTOR			832	VA

FEED THROUGH PANEL — LOAD (kVA)

SUB FEED LOADS	AMP/P	LOAD	LOAD TYPE

LOAD SUMMARY

Phase Loading	
Phase A	6 kVA
Phase B	6 kVA
Phase C	4 kVA
Total Connected Load	16 kVA
Total Demand Load	17 kVA
Line to Line Voltage	208 VOLTS
Spare Capacity	20%
Panel Amps	56 AMPS

PANEL SCHEDULE NOTE:

- PANEL SHALL BE EQUIPPED WITH A POWER METER. METER SHALL BE AS PER SPECIFICATION SECTION 26 24 16, SECTION 2.5. METER SHALL BE CONNECTED TO A FUTURE POWER MONITORING SYSTEM.

H4L (EX.) *(SQUARE-D TYPE NH1B PANELBOARD)*

VOLTAGE : 480/277 VOLTS 3 PHASE, 4 WIRE
BUS RATING : 125 AMPS
MAIN : MLO (70 AMP FEEDER)
BRANCHTYPE: NORMAL BRANCH

CB OPT: ST - SHUNT TRIP
AF - ARC FAULT CIRCUIT INTERRUPTER
GF - GROUND FAULT
FR - 100% RATED
L - LOCKABLE
EP - EQUIPMENT GROUND FAULT (30mA)

14kA **AIC RATING**
SPECIAL OPTIONS

LOAD TYPE	LOAD (VA)	CNKOT	LOAD SERVED	CB AMP/P	COBP T	PHASE A	B	C	COBP T	CB AMP/P	LOAD SERVED	CNKOT	LOAD (VA)	LOAD TYPE
LIGHTING		1	1-LTG-403-403A-409A	20/1		A				20/1	10-LTG-412-410-410A	2		LIGHTING
LIGHTING		3	2-LTG-406-407	20/1			B			20/1	11-LTG-406-408	4	200	LIGHTING
LIGHTING		5	3-LTG-409-411	20/1				C		20/1	12-LTG-404-402-401-400	6	324	LIGHTING
LIGHTING		7	4-LTG-411A-413-415	20/1		A				20/1	13-LTG 5TH FLR	8	1200	LIGHTING
LIGHTING		9	5-LTG-417-417A-419A	20/1			B			20/1	14-LTG 5TH FLR	10	1200	LIGHTING
LIGHTING		11	6-LTG-419-421-CORR	20/1				C		20/1	15-SPARE	12		
LIGHTING		13	7-LTG-422-422A-420	20/1		A				20/1	17-SPARE	14		
LIGHTING		15	8-LTG 418	20/1			B			20/1	16-SPARE	16		
LIGHTING		17	9-LTG 416-414	20/1				C			SPACE	18		
		19	SPACE			A					SPACE	20		
		21	SPACE				B				SPACE	22		
		23	SPACE					C			SPACE	24		

EXISTING METERED LOAD X 125%	PHASE A	PHASE B	PHASE C (VA)

PANEL CALCULATIONS:

LOAD TYPE	LOAD (VA)	DEMAND FACTOR	DEMAND LOAD	
RECEPTACLE	0	PER NEC ARTICLE 220.44	0	VA
LIGHTING	2924	125%	3655	VA
MOTOR	0	100%	0	VA
HEAT	0	100%	0	VA
MISC	0	100%	0	VA
25% OF LARGEST MOTOR			0	VA

FEED THROUGH PANEL — LOAD (kVA)

SUB FEED LOADS	AMP/P	LOAD	LOAD TYPE

LOAD SUMMARY

Phase Loading	
Phase A	1 kVA
Phase B	1 kVA
Phase C	0 kVA
Total Connected Load	3 kVA
Total Demand Load	4 kVA
Line to Line Voltage	480 VOLTS
Spare Capacity	20%
Panel Amps	5 AMPS

PANEL SCHEDULE GENERAL NOTES:

A. FIELD VERIFY ALL EXISTING BREAKERS SHOWN. NEW BREAKERS ARE SHOWN WITH BOLD TEXT.

B. WHERE CIRCUITS ARE REMOVED DUE TO DEMO, TURN BREAKER "OFF" AND UPDATE DIRECTORY TO "SPARE"

PANEL SCHEDULE REFERENCE NOTES:

1) PROVIDE NEW BREAKER TO MATCH TYPE AND AIC RATING OF EXISTING.

2) REMOVE EXISTING BREAKER AND PROVIDE NEW.

3) UTILIZE EXISTING SPARE BREAKER.

5-L-P (EX.) *(SQUARE-D TYPE NQOD PANELBOARD)*

VOLTAGE : 120/208 VOLTS 3 PHASE, 4 WIRE
BUS RATING : 100 AMPS
MAIN : MLO (100 AMP FEEDER)
BRANCHTYPE: EMERGENCY BRANCH

CB OPT: ST - SHUNT TRIP
AF - ARC FAULT CIRCUIT INTERRUPTER
GF - GROUND FAULT
FR - 100% RATED
L - LOCKABLE
EP - EQUIPMENT GROUND FAULT (30mA)

10kA **AIC RATING**
SPECIAL OPTIONS

LOAD TYPE	LOAD (VA)	CNKOT	LOAD SERVED	CB AMP/P	COBP T	PHASE A	B	C	COBP T	CB AMP/P	LOAD SERVED	CNKOT	LOAD (VA)	LOAD TYPE
MOTOR		1	403-EF/4 SPARE	20/1		A				20/1	B-16 EF/9	2	1176	MOTOR
MOTOR		3	406-EF/6 SPARE	20/1			B			20/1	309D EF/11	4	1176	MOTOR
MOTOR		5	B-08 EF/7 SPARE	20/1				C		20/1	418 EF/10	6	1176	MOTOR
MOTOR	1176	7	307 EF/8	20/1		A				20/1	33-04 EF/5	8	1176	MOTOR
MOTOR	500	9	FUMEHOOD	20/1			B			20/1	5TH FLR AC CONTROLS	10	500	MISC
MOTOR	500	11	FUMEHOOD	20/1				C			SPACE	12		
MOTOR	500	13	FUMEHOOD	20/1		A					SPACE	14		
MISC	**500**	15	**AHU CONTROLS**	20/1			B				SPACE	16		
RECEPTACLE	**540**	17	**AHU REC/LTG**	**20/1**	**(1)**			C			SPACE	18		
MOTOR	**696**	19	**EF-4**	**15/1**	**(1)**	A			**(1)**	**30/3**	**SURGE PROT DEVICE**	20		
		21	SPACE				B		-	--	--	22		
		23	SPACE					C	-	--	--	24		

EXISTING METERED LOAD X 125%	PHASE A	PHASE B	PHASE C (VA)

PANEL CALCULATIONS:

LOAD TYPE	LOAD (VA)	DEMAND FACTOR	DEMAND LOAD	
RECEPTACLE	540	PER NEC ARTICLE 220.44	540	VA
LIGHTING	0	125%	0	VA
MOTOR	8076	100%	8076	VA
HEAT	0	100%	0	VA
MISC	1000	100%	1000	VA
25% OF LARGEST MOTOR			294	VA

FEED THROUGH PANEL — LOAD (kVA)

SUB FEED LOADS	AMP/P	LOAD	LOAD TYPE

LOAD SUMMARY

Phase Loading	
Phase A	5 kVA
Phase B	3 kVA
Phase C	2 kVA
Total Connected Load	10 kVA
Total Demand Load	10 kVA
Line to Line Voltage	208 VOLTS
Spare Capacity	20%
Panel Amps	33 AMPS

PANEL SCHEDULE GENERAL NOTES:

A. FIELD VERIFY ALL EXISTING BREAKERS SHOWN. NEW BREAKERS ARE SHOWN WITH BOLD TEXT.

B. WHERE CIRCUITS ARE REMOVED DUE TO DEMO, TURN BREAKER "OFF" AND UPDATE DIRECTORY TO "SPARE"

PANEL SCHEDULE REFERENCE NOTES:

1) PROVIDE NEW BREAKER TO MATCH TYPE AND AIC RATING OF EXISTING.

2) REMOVE EXISTING BREAKER AND PROVIDE NEW.

3) UTILIZE EXISTING SPARE BREAKER.

E4L (EX.) *(SQUARE-D TYPE NQOB PANELBOARD)*

VOLTAGE : 120/208 VOLTS 3 PHASE, 4 WIRE
BUS RATING : 225 AMPS
MAIN : MLO (60 AMP FEEDER)
BRANCHTYPE: EMERGENCY BRANCH

CB OPT: ST - SHUNT TRIP
AF - ARC FAULT CIRCUIT INTERRUPTER
GF - GROUND FAULT
FR - 100% RATED
L - LOCKABLE
EP - EQUIPMENT GROUND FAULT (30mA)

10kA **AIC RATING**
SPECIAL OPTIONS

LOAD TYPE	LOAD (VA)	CNKOT	LOAD SERVED	CB AMP/P	COBP T	PHASE A	B	C	COBP T	CB AMP/P	LOAD SERVED	CNKOT	LOAD (VA)	LOAD TYPE
		1	SPARE	30/3		A				30/1	13-REC-RM-412 SPARE	2		RECEPTACLE
		3	--	--			B			20/1	14-REC-RM-410A SPARE	4		RECEPTACLE
		5	--	--				C		20/1	15-REC-RM-408 SPARE	6		RECEPTACLE
RECEPTACLE		7	2-REC-RM-419 SPARE	20/1		A				20/1	16-REC-RM-406 SPARE	8		RECEPTACLE
RECEPTACLE		9	3-REC-RM-417 SPARE	20/1			B			20/1	17-REC-RM-402 SPARE	10		RECEPTACLE
RECEPTACLE		11	4-REC-RM-415 SPARE	20/1				C		20/1	18-REC	12	900	RECEPTACLE
RECEPTACLE		13	5-REC-RM-411 SPARE	20/1		A				20/1	19-PUMBPTHS MODEM	14	500	MISC
RECEPTACLE		15	6-REC-RM-409 SPARE	20/1			B			20/1	20-REC	16	900	RECEPTACLE
RECEPTACLE		17	7-REC-RM-407 SPARE	20/1				C		20/1	21-REC	18	900	RECEPTACLE
RECEPTACLE		19	8-REC-RM-405 SPARE	20/1		A				20/1	22-SPARE	20		
RECEPTACLE		21	9-REC-RM-403 SPARE	20/1			B			20/1	23-REC	22	900	RECEPTACLE
RECEPTACLE		23	10-REC-RM-422 SPARE	20/1				C		20/1	24-REC	24	900	RECEPTACLE
RECEPTACLE		25	11-REC-RM-418 SPARE	20/1		A				20/1	25-REC	26	900	RECEPTACLE
RECEPTACLE		27	12-REC-RM-414 SPARE	20/1			B			20/1	26-SPARE	28		
LIGHTING	**670**	29	**LIGHTING**	**20/1**	**(1)**			C	**(1)**	**20/1**	**AUTO OPERATOR**	30	**1000**	**MOTOR**

EXISTING METERED LOAD X 125%	PHASE A	PHASE B	PHASE C (VA)

PANEL CALCULATIONS:

LOAD TYPE	LOAD (VA)	DEMAND FACTOR	DEMAND LOAD	
RECEPTACLE	5400	PER NEC ARTICLE 220.44	5400	VA
LIGHTING	670	125%	838	VA
MOTOR	1000	100%	1000	VA
HEAT	0	100%	0	VA
MISC	500	100%	500	VA
25% OF LARGEST MOTOR			250	VA

FEED THROUGH PANEL — LOAD (kVA)

SUB FEED LOADS	AMP/P	LOAD	LOAD TYPE

LOAD SUMMARY

Phase Loading	
Phase A	1 kVA
Phase B	2 kVA
Phase C	4 kVA
Total Connected Load	8 kVA
Total Demand Load	8 kVA
Line to Line Voltage	208 VOLTS
Spare Capacity	20%
Panel Amps	27 AMPS

PANEL SCHEDULE GENERAL NOTES:

A. FIELD VERIFY ALL EXISTING BREAKERS SHOWN. NEW BREAKERS ARE SHOWN WITH BOLD TEXT.

B. WHERE CIRCUITS ARE REMOVED DUE TO DEMO, TURN BREAKER "OFF" AND UPDATE DIRECTORY TO "SPARE"

PANEL SCHEDULE REFERENCE NOTES:

1) PROVIDE NEW BREAKER TO MATCH TYPE AND AIC RATING OF EXISTING.

2) REMOVE EXISTING BREAKER AND PROVIDE NEW.

3) UTILIZE EXISTING SPARE BREAKER.

NEW 5-H-P

VOLTAGE : 480/277 VOLTS 3 PHASE, 4 WIRE
BUS RATING : 250 AMPS
MAIN : MLO (225 AMP FEEDER)
BRANCHTYPE: EMERGENCY BRANCH

CB OPT: ST - SHUNT TRIP
AF - ARC FAULT CIRCUIT INTERRUPTER
GF - GROUND FAULT
FR - 100% RATED
L - LOCKABLE
EP - EQUIPMENT GROUND FAULT (30mA)

14kA **AIC RATING**
SPECIAL OPTIONS

LOAD TYPE	LOAD (VA)	CNKOT	LOAD SERVED	CB AMP/P	COBP T	PHASE A	B	C	COBP T	CB AMP/P	LOAD SERVED	CNKOT	LOAD (VA)	LOAD TYPE
MOTOR	6983	1	AHU-4 (CKT 1)	45/3		A				15/3	HWP-4.1	2	443	MOTOR
MOTOR	6983	3	--	--			B			--	--	4	443	MOTOR
MOTOR	6983	5	--	--				C		--	--	6	443	MOTOR
MOTOR	5487	7	AHU-4 (CKT 2)	35/3		A				15/3	HWP-4.2	8	443	MOTOR
MOTOR	5487	9	--	--			B			--	--	10	443	MOTOR
MOTOR	5487	11	--	--				C		--	--	12	443	MOTOR
		13	SPACE			A					SPACE	14		
		15	SPACE				B				SPACE	16		
		17	SPACE					C			SPACE	18		
		19	SPACE			A					SPACE	20		
		21	SPACE				B				SPACE	22		
		23	SPACE					C			SPACE	24		
		25	SPACE			A					SPACE	26		
		27	SPACE				B				SPACE	28		
		29	SPACE					C			SPACE	30		
		31	SPACE			A					SPACE	32		
		33	SPACE				B				SPACE	34		
		35	SPACE					C			SPACE	36		
		37	SURGE PROT DEVICE	30/3		A				50/3	NEW PANEL E4L-2	38	6008	SUBFEED
		39	--	--			B			--	NEW PANEL E4L-2	40	5824	SUBFEED
		41	--	--				C		--	NEW PANEL E4L-2	42	4160	SUBFEED

EXISTING METERED LOAD X 125%	PHASE A	PHASE B	PHASE C (VA)

PANEL CALCULATIONS:

LOAD TYPE	LOAD (VA)	DEMAND FACTOR	DEMAND LOAD	
RECEPTACLE	720	PER NEC ARTICLE 220.44	720	VA
LIGHTING	44	125%	55	VA
MOTOR	43396	100%	43396	VA
HEAT	0	100%	0	VA
MISC	11900	100%	11900	VA
25% OF LARGEST MOTOR			5237	VA

FEED THROUGH PANEL — LOAD (kVA)

SUB FEED LOADS	AMP/P	LOAD	LOAD TYPE

LOAD SUMMARY

Phase Loading	
Phase A	19 kVA
Phase B	19 kVA
Phase C	18 kVA
Total Connected Load	56 kVA
Total Demand Load	61 kVA
Line to Line Voltage	480 VOLTS
Spare Capacity	20%
Panel Amps	88 AMPS

L4L (EX.) *(SQUARE-D TYPE NQOB PANELBOARD)*

VOLTAGE : 120/208 VOLTS 3 PHASE, 4 WIRE
BUS RATING : 100 AMPS
MAIN : MLO (100 AMP FEEDER)
BRANCHTYPE: NORMAL BRANCH

CB OPT: ST - SHUNT TRIP
AF - ARC FAULT CIRCUIT INTERRUPTER
GF - GROUND FAULT
FR - 100% RATED
L - LOCKABLE
EP - EQUIPMENT GROUND FAULT (30mA)

10kA **AIC RATING**
SPECIAL OPTIONS

LOAD TYPE	LOAD (VA)	CNKOT	LOAD SERVED	CB AMP/P	COBP T	PHASE A	B	C	COBP T	CB AMP/P	LOAD SERVED	CNKOT	LOAD (VA)	LOAD TYPE
RECEPTACLE		1	1-REC-402-404	20/1		A				20/1	16-SPARE	2		
RECEPTACLE		3	2-REC-400	20/1			B			20/1	17-TBD	4	500	MISC
RECEPTACLE		5	3-REC-CORR C4-1	20/1				C		20/1	18-5TH FLR PUMP	6	500	MOTOR
RECEPTACLE		7	4-REC-417A CLR	20/1		A				20/1	19-REC 5TH FLR	8	720	RECEPTACLE
RECEPTACLE		9	5-REC-422A	20/1			B			20/1	20-REC 5TH FLR	10	720	RECEPTACLE
RECEPTACLE		11	6-REC-419A	20/1				C		20/1	21-REC 5TH FLR	12	720	RECEPTACLE
RECEPTACLE		13	7-REC-417A	20/1		A				20/1	22-REC 5TH FLR	14	720	RECEPTACLE
RECEPTACLE		15	8-REC-413	20/1			B			20/1	23-LTG AHU PLENUM	16	200	LIGHTING
RECEPTACLE		17	9-REC-411A	20/1				C		20/1	24-5TH FLR HEATERS	18	1000	HEAT
RECEPTACLE		19	10-REC-409A	20/1		A				20/1	25-SPARE	20		
RECEPTACLE		21	11-REC-403A	20/1			B			20/1	26-SPARE	22		
RECEPTACLE		23	12-REC-410	20/1				C		20/1	5TH FLR JBOX	24	500	MISC
MOTOR	1175	25	13-EX FAN WTR HTR RM	20/1		A				20/1	28-REC-402 (WM)	26		RECEPTACLE
MISC	500	27	14-5TH FLR FILTER	20/1			B			20/1	29-SPARE	28		
MISC	500	29	15-5TH FLOR FILTER	20/1				C		20/1	30-SPARE	30		

EXISTING METERED LOAD X 125%	PHASE A	PHASE B	PHASE C (VA)

PANEL CALCULATIONS:

LOAD TYPE	LOAD (VA)	DEMAND FACTOR	DEMAND LOAD	
RECEPTACLE	2880	PER NEC ARTICLE 220.44	2880	VA
LIGHTING	200	125%	250	VA
MOTOR	1675	100%	1675	VA
HEAT	1000	100%	1000	VA
MISC	2000	100%	2000	VA
25% OF LARGEST MOTOR			294	VA

FEED THROUGH PANEL — LOAD (kVA)

SUB FEED LOADS	AMP/P	LOAD	LOAD TYPE

LOAD SUMMARY

Phase Loading	
Phase A	3 kVA
Phase B	2 kVA
Phase C	3 kVA
Total Connected Load	8 kVA
Total Demand Load	8 kVA
Line to Line Voltage	208 VOLTS
Spare Capacity	20%
Panel Amps	27 AMPS

PANEL SCHEDULE GENERAL NOTES:

A. FIELD VERIFY ALL EXISTING BREAKERS SHOWN. NEW BREAKERS ARE SHOWN WITH BOLD TEXT.

B. WHERE CIRCUITS ARE REMOVED DUE TO DEMO, TURN BREAKER "OFF" AND UPDATE DIRECTORY TO "SPARE"

PANEL SCHEDULE REFERENCE NOTES:

1) PROVIDE NEW BREAKER TO MATCH TYPE AND AIC RATING OF EXISTING.

2) REMOVE EXISTING BREAKER AND PROVIDE NEW.

3) UTILIZE EXISTING SPARE BREAKER.

NEW L4L-2 (SECTIONS 1,2,3)

VOLTAGE : 120/208 VOLTS 3 PHASE, 4 WIRE
BUS RATING : 225 AMPS
MAIN : MLO (200 AMP FEEDER)
BRANCHTYPE: NORMAL BRANCH

CB OPT: ST - SHUNT TRIP
AF - ARC FAULT CIRCUIT INTERRUPTER
GF - GROUND FAULT
FR - 100% RATED
L - LOCKABLE
EP - EQUIPMENT GROUND FAULT (30mA)

10kA **AIC RATING**
SPECIAL OPTIONS

LOAD TYPE	LOAD (VA)	CNKOT	LOAD SERVED	CB AMP/P	COBP T	PHASE A	B	C	COBP T	CB AMP/P	LOAD SERVED	CNKOT	LOAD (VA)	LOAD TYPE
RECEPTACLE	360	1	CLASSRM REC	20/1		A				20/1	CLASSRM REC	2	360	RECEPTACLE
RECEPTACLE	360	3	CLASSRM REC	20/1			B			20/1	CLASSRM REC	4	360	RECEPTACLE
RECEPTACLE	360	5	CLASSRM REC	20/1				C		20/1	CLASSRM REC	6	360	RECEPTACLE
RECEPTACLE	360	7	CLASSRM REC	20/1		A				20/1	CLASSRM REC	8	360	RECEPTACLE
RECEPTACLE	360	9	CLASSRM REC	20/1			B			20/1	CLASSRM REC	10	360	RECEPTACLE
RECEPTACLE	360	11	CLASSRM REC	20/1				C		20/1	CLASSRM REC	12	360	RECEPTACLE
RECEPTACLE	360	13	CLASSRM REC	20/1		A				20/1	CLASSRM REC	14	360	RECEPTACLE
RECEPTACLE	360	15	CLASSRM REC	20/1			B			20/1	CLASSRM REC	16	360	RECEPTACLE
RECEPTACLE	540	17	CLASSRM REC	20/1				C		20/1	CLASSRM REC	18	540	RECEPTACLE
RECEPTACLE	360	19	CLASSRM REC	20/1		A				20/1	CLASSRM REC	20	360	RECEPTACLE
RECEPTACLE	360	21	CLASSRM REC	20/1			B			20/1	CLASSRM REC	22	360	RECEPTACLE
RECEPTACLE	360	23	CLASSRM REC	20/1				C		20/1	CLASSRM REC	24	360	RECEPTACLE
RECEPTACLE	360	25	CLASSRM REC	20/1		A				20/1	CLASSRM REC	26	360	RECEPTACLE
RECEPTACLE	360	27	CLASSRM REC	20/1			B			20/1	CLASSRM REC	28	360	RECEPTACLE
RECEPTACLE	360	29	CLASSRM REC	20/1				C		20/1	CLASSRM REC	30	360	RECEPTACLE
RECEPTACLE	360	31	CLASSRM REC	20/1		A				20/1	CLASSRM REC	32	360	RECEPTACLE
RECEPTACLE	360	33	CLASSRM REC	20/1			B			20/1	CLASSRM REC	34	360	RECEPTACLE
RECEPTACLE	540	35	CLASSRM REC	20/1				C		20/1	CLASSRM REC	36	540	RECEPTACLE
		37	SURGE PROT DEVICE	30/3		A				20/1	CLASSRM REC	38	540	RECEPTACLE
		39	--	--			B			20/1	CLASSRM REC	40	360	RECEPTACLE
		41	--	--				C		20/1	CLASSRM REC	42	360	RECEPTACLE
RECEPTACLE	360	43	CLASSRM REC	20/1		A				20/1	CLASSRM REC	44	360	RECEPTACLE
RECEPTACLE	360	45	CLASSRM REC	20/1			B			20/1	CLASSRM REC	46	360	RECEPTACLE
RECEPTACLE	360	47	CLASSRM REC	20/1				C		20/1	CLASSRM REC	48	360	RECEPTACLE
RECEPTACLE	360	49	CLASSRM REC	20/1		A				20/1	CLASSRM REC	50	360	RECEPTACLE
RECEPTACLE	360	51	CLASSRM REC	20/1			B			20/1	CLASSRM REC	52	360	RECEPTACLE
RECEPTACLE	360	53	CLASSRM REC	20/1				C		20/1	CLASSRM REC	54	360	RECEPTACLE
RECEPTACLE	540	55	CLASSRM REC	20/1		A				20/1	CLASSRM REC	56	540	RECEPTACLE
RECEPTACLE	360	57	CLASSRM REC	20/1			B			20/1	CLASSRM REC	58	360	RECEPTACLE
RECEPTACLE	360	59	CLASSRM REC	20/1				C		20/1	CLASSRM REC	60	360	RECEPTACLE
RECEPTACLE	360	61	CLASSRM REC	20/1		A				20/1	CLASSRM REC	62	360	RECEPTACLE
RECEPTACLE	360	63	CLASSRM REC	20/1			B			20/1	CLASSRM REC	64	360	RECEPTACLE
RECEPTACLE	360	65	C

GENERAL TELECOMMUNICATIONS NOTES

1. FOR GENERAL TELECOMMUNICATION INFORMATION AND SOW SEE DESIGN NARRATIVE/BASIS OF DESIGN NARRATIVE.

2. SCOPE INCLUDES MODIFICATIONS AND ADDITIONS TO EXISTING ACCESS CONTROL AND VIDEO SURVEILLANCE SYSTEMS. CONTRACTORS TO PROVIDE ALL LABOR AND MATERIALS, INCLUDING COMPONETS, REQUIRE TO ACHIEVE A FULLY FUNCTIONAL SYSTEM AND COMPATIBLE WITH EXISTING ONE.

3.PROJECT COORDINATION- NO SYSTEMS OR COMPONENTS SHALL BE DISRUPTED OUT OF PROJECT SEQUENCE; COORDINATE ALL SERVICES DISRUPTIONS WITH THE PROJECT COR.

4.CARE SHALL BE TAKEN AS TO NOT DISRUPT OR DAMAGE EXISTING SYSTEMS INCLUDING BUT NOT LIMITED TO CATV, ACCESS CONTROL, NURSE CALL, BUILDING AUTOMATION, DISTRIBUTED ANTENNA, PAGING.

5.CONTRACTOR SHALL VERIFY ALL COMPONENTS CODED TO EXISTING TELECOMMUNICATION GROUNDING BUSBARS HAVE BEEN TAKEN OUT OF SERVICE OR HAS BEEN BONDED TO THE NEW TELECOMMUNICATION GROUNDING/BONDING SYSTEM PRIOR TO REMOVING EXISTING GROUNDING COMPONENTS.

6.CONTRACTOR SHALL VERIFY EXISTING CONDITIONS AND PROMPTLY REPORT ANY DRAWING DICREPANCIES TO THE PROJECT COR AND ARCHITECT.

7. IN ADDITION TO PRIMARY PATHWAYS, CABLE TRAY SHALL BE PROVIDED WITH CABLE BUNDLES EXCEED 24 CABLES.

8. FIRE RATED MECHANICAL SLEEVE ASSEMBLES SHALL BE PROVIDED WHEN PASSING THROUGH FIRE RATED PARTITIONS ASSUMING 40% FILL AND 50% SPARE CAPACITY

9. CONTRACTOR SHALL ENSURE THAT ALL PENETRATIONS BE SEALED AS REQUIRED TO MEET EXISTING RATINGS. REFER TO SPECIFICATION 07 84 00.

10.EXISTING ROUTING FOR TELECOM DROPS SHALL BE MAINTAINED TO THE FULLEST EXTENT POSSIBLE. IT IS UNDERSTOOD THAT SOME OF HTE NEW CABLE WILL BE PLACED WITHIN NEW CABLE TRAY, HOWEVER THE EXISTING CONDUIT TO THE DATA DROP SHALL BE REUSED.

11. THE INDUSTRY STANDARD OF 295 FEET MAXIMUM HORIZONTAL CABLE LENGTH SHALL IMPLEMENTED. IF THIS REQUIREMENT CAN NOT BE MET, CONTACT TO PROJECT COR IMMEDIATELY.

12. ALL CABLE TO WIRELESS ACCESS POINTS (WAPS) SHALL BE REPLACED WITH CAT 6A CABLES. PROVIDE A NEW (2) CAT 6A SINGLE JACK SURFACE MOUNTED BOX ABOVE THE CEILING WHERE EXISTING WAPS ARE LOCATED. ALL EXISTING WIRELESS ACCESS POINT DEVICES SHOULD BE REMOVED DURING CONSTRUCTION AND REINSTALLED IN EXISTING LOCATION WITH NEW CABLING TO NEW TR.

INDUSTRY STANDARDS

1.8.2.8 TELECOMMUNICATIONS INDUSTRY ASSOCIATION (TIA):
(A) TIA-120 SERIES -TELECOMMUNICATIONS LAND MOBILE COMMUNICATIONS (APCO/PROJECT 25).
(B) TIA-155- GUIDELINES FOR THE ASSESSMENT AND MITIGATION OF INSTALLED CATEGORY 6 CABLING TO SUPPORT 10GBASE-T.
(C) TIA TSB - 162 - A - TELECOMMUNICATIONS CABLING GUIDELINES FOR WIRELESS ACCESS POINTS.
(D) TIIA - 222 - STRUCTURAL STANDARD FOR ANTENNA SUPPORTING STRUCTURES AND ANTENNAS.
(E) TIA - 472DOOO - B - FIBER OPTIC COMMUNICATIONS CABLE FOR OUTSIDE PLANT USE.
(F) TIA - 568 - REVISION/EDITION: C COMMERCIAL BUILDING TELECOMMUNICATIONS CABLING STANDARD SET:
(· TIA - 568 .0 (REV. E) GENERIC TELECOMMUNICATIONS CABLING FOR CUSTOMER PREMISES,
(· TIA - 568 .1 (REV. E) COMMERCIAL BUILDING TELECOMMUNICATIONS CABLING

STANDARD PART 1: GENERAL REQUIREMENTS, (· TIA - 568 .2 (REV. D) COMMERCIAL BUILDING TELECOMMUNICATIONS CABLING
STANDARD - PART 2: BALANCED TWISTED PAIR CABLING COMPONENTS,
(· TIA - 568.3 (REV. D) OPTICAL FIBER CABLING COMPONENTS STANDARD, AND
(· TIA - 568 .4 (REV. D) BROADBAND COAXIAL CABLING AND COMPONENTS STANDARD (WITH ADDENDUMS AND ERRATA).
(G) TIA - 569 (REV. E)- TELECOMMUNICATIONS PATHWAYS AND SPACES.
(H) TIA/EIE - 590 (REV. A) - STANDARD FOR PHYSICAL LOCATION AND PROTECTION OF BELOW GROUND FIBER OPTIC CABLE PLANT.
(I) ANSI/TIA - 606 (REV. D) - ADMINISTRATION STANDARD FOR TELECOMMUNICATIONS INFRASTRUTURE.
(J) TIA - 607 (REV. D) - GENERIC TELECOMMUNICATIONS BONDING AND GROUNDING (EARTHING) FOR CUSTOMER PREMISES.
(K) ANSI/TIA - 758 (REV. B) - CUSTOMER-OWNED OUTSIDE PLANT TELECOMMUNICATION INFRASTRUCTURE STANDARD.
(L) ANSI/TIA - 862 (REV. B)- BUILDING AUTOMATION SYSTEMS CABLING STANDARD.
(M) TIA - 942 (REV. B) - TELECOMMUNICATIONS INFRASTRUCTURE STANDARD FOR DATA CENTERS.
(N) TIA - 1179 (REV. A)- HEALTHCARE FACILITY TELECOMMUNICATIONS INFRASTRUCTURE STANDARD.

COMMUNICATION SYMBOLS

P# +H — WALL MOUNTED - TELEPHONE OUTLET
P# = NUMBER OF VOICE / DATA PORTS IN FACEPLATE, IF NOT SHOWN PROVIDE 1 PORTS
+ H =INSTALLATION HEIGHT IN INCHES AT CENTER OF OUTLET, IF NOT SHOWN INSTALL AT TYPICAL 18" RECEPTACLE HEIGHT. COORDINATE WITH ELECTRICAL

P# +H — WALL MOUNTED - VOICE / DATA OUTLET
P# = NUMBER OF VOICE / DATA PORTS IN FACEPLATE, IF NOT SHOWN PROVIDE 4 PORTS
+ H =INSTALLATION HEIGHT IN INCHES AT CENTER OF OUTLET, IF NOT SHOWN INSTALL AT TYPICAL 18" RECEPTACLE HEIGHT. COORDINATE WITH ELECTRICAL

P# — CEILING MOUNTED - VOICE / DATA OUTLET
P# = NUMBER OF VOICE / DATA PORTS IN FACEPLATE, IF NOT SHOWN PROVIDE 4 PORTS

P# — FLOOR MOUNTED-TELEPHONE/DATA OUTLET
P# = NUMBER OF VOICE / DATA PORTS IN FACEPLATE, IF NOT SHOWN PROVIDE 4 PORTS

P# +H — WALL MOUNTED - GETWELL NETWORK DATA OUTLET
P# = NUMBER OF VOICE / DATA PORTS IN FACEPLATE, IF NOT SHOWN PROVIDE 1 PORTS
+ H =INSTALLATION HEIGHT IN INCHES AT CENTER OF OUTLET, IF NOT SHOWN INSTALL AT TYPICAL 72" RECEPTACLE HEIGHT. COORDINATE WITH ELECTRICAL

WAP — CEILING MOUNTED - OUTLET FOR WIRELESS ACCESS POINT
P# = NUMBER OF VOICE / DATA PORTS IN FACEPLATE, IF NOT SHOWN PROVIDE 2 PORTS

E P# — FLOOR BOX- VOICE / DATA OUTLETS
P# = NUMBER OF VOICE / DATA PORTS IN FACEPLATE, IF NOT SHOWN PROVIDE 4 PORTS
E= POWER OUTLET- REFER TO ELECTRICAL PLANS FOR DETAILS

E P# — POKE THRU- VOICE / DATA OUTLETS
P# = NUMBER OF VOICE / DATA PORTS IN FACEPLATE, IF NOT SHOWN PROVIDE 4 PORTS
E= POWER OUTLET- REFER TO ELECTRICAL PLANS FOR DETAILS

TV T# +H — WALL MOUNTED TV OUTLET
PROVIDE 1 DATA PORT AND 1 COAX PORT UNLESS OTHERWISE NOTED
T# = TYPE OF OUTLET SEE TELECOMMUNICATION DETAILS
+ H =INSTALLATION HEIGHT IN INCHES AT CENTER OF OUTLET, IF NOT SHOWN INSTALL AT TYPICAL 72" RECEPTACLE HEIGHT. COORDINATE WITH ELECTRICAL

TV T# +H — CEILING MOUNTED TV OUTLET
PROVIDE 1 DATA PORT AND 1 COAX PORT UNLESS OTHERWISE NOTED
T# = TYPE OF OUTLET SEE TELECOMMUNICATION DETAILS
+ H =INSTALLATION HEIGHT IN INCHES AT CENTER OF OUTLET, IF NOT SHOWN INSTALL AT TYPICAL 72" RECEPTACLE HEIGHT. COORDINATE WITH ELECTRICAL

ELECTRONIC SAFETY AND SECURITY SYMBOLS

REMOTE DICTATING OUTLET MTD 1'-6" (457 mm) AFF. UNLESS OTHERWISE NOTED

P — PUSH BUTTON.

X — CEILING MOUNTED SECURITY CAMERA, X REPRESENTS VIEW RANGE OF CAMERA

X — WALL MOUNTED SECURITY CAMERA, X REPRESENTS VIEW RANGE OF CAMERA

CR — WALL MOUNTED CARD READER
CR/K — WALL MOUNTED CARD READER WITH KEYPAD
RFID — WALL MOUNTED PATIENT WRISTBAND READER
AIP — AIPHONE
ADO — AUTO-DOOR OPERATOR
REX — REQUEST TO EXIT PUSH BUTTON
ACP — ACCESS CONTROL PANEL
ACP — ACCESS CONTROL PANEL
KP — KEYPAD LOCK
RX — REQUEST TO EXIT MOTION
ES — DOOR LOCKING MECHANISM/ELECT STRIKE
ML — DOOR LOCKING MECHANISM/MAG LOCK
ROOF POLE MOUNTED SECURITY CAMERA
CCP — CAMERA CONTROL PANEL
MID — MOTION INTRUSION DETECTOR
GB — GLASS BREAK SENSOR
DC — DOOR CONTACT

INTERCOM STATION (REFER TO SPECS. FOR FUNCTIONAL OPERATION OF INSTRUMENT & TYPE REQUIRED)

S — INTERCOM STAFF STATION.

R — RADIO CHANNEL SELECTOR FACILITIES, MTD. 4'-6" (1372 mm) AFF UNLESS OTHERWISE NOTED.

R M — SPEAKER PROGRAM SELECTOR SWITCH & VOLUME CONTROL MTD. 4'-6" (1372 mm) AFF UNLESS OTHERWISE NOTED.

DB — DURESS BUTTON

DAP — DIVERSITY PATCH ANTENNA

DAC — DAS ANTENNA CELLULAR

DS — OVER THE DOOR ALARM SENSOR

S PA — PUBLIC ADDRESS SYSTEM 2X2 RECESSED SPEAKER

S X — SPEAKER, WALL MOUNTED, "X" INDICATES THE TYPE, PROVIDE SCHEDULE ON LEGEND MTD. 7'-6" (2286mm) AFF UNLESS OTHERWISE NOTED

S PA — PUBLIC ADDRESS SYSTEM WALL MOUNTED SPEAKER

S EM — EMERGENCY MANAGEMENT SYSTEM TEXT-TO-SPEECH WALL MOUNTED SPEAKER.

V — SOUND MASKING (WHITE NOISE) SYSTEM LOCAL KEYPAD STATION

S X — SPEAKER, CEILING MOUNTED, "X" INDICATES THE TYPE, PROVIDE SCHEDULE ON LEGEND

S PA — PUBLIC ADDRESS SYSTEM CEILING RECESSED ROUND SPEAKER

S IC — INTERCOM SYSTEM SPEAKER.

S SM — SOUND MASKING (WHITE NOISE) SYSTEM SPEAKER.

GENERAL SYMBOLS

CATV — CABLE TELEVISION LINE = CATV
CCTV — CLOSED CIRCUIT TELEVISION LINE = CCTV. MINIMUM 1" (25mm) CONDUIT
FO — FIBER OPTICS LINE = FO
T — TELEPHONE LINE = T
I — INTERCOM LINE = I. MINIMUM 3/4" (19mm) CONDUIT.
S — SOUND LINE = S
NC — NURSE CALL LINE = NC. MINIMUM 3/4" (19mm) CONDUIT.
R — RADIO CONDUIT RUN, MINIMUM 3/4" (19mm) CONDUIT.
C — TELECOMMUNICATIONS MANHOLE
TELECOMMUNICATION TERMINAL CABINET
TTB — TELEPHONE BACKBOARD (WALL MOUNTED)

VA CONTRACT NO: 36C24521C0021

100% CONSTRUCTION + BID DRAWINGS	10/06/2023
100% CONSTRUCTION + BID DRAWINGS	09/28/2023
95% CONSTRUCTION DESIGN	09/01/2023
65% DESIGN DEVELOPMENT	07/27/2023
35% SCHEMATIC DESIGN	06/26/2023
Revisions:	Date:

CONSULTANT

ARCHITECT/ENGINEER OF RECORD
BANCROFT ARCHITECTS + ENGINEERS
700 Nicholas Blvd, Suite 300
Elk Grove Village, IL 60007
T: 847.952.9362 F: 847.952.9403
www.bancroft-ae.com

STAMP
LICENSED PROFESSIONAL ENGINEER JOSHUA MIKELS 062-072690 10/6/2023 OF ILLINOIS

Office of Construction and Facilities Management
VA U.S. Department of Veterans Affairs

Drawing Title	Phase	Project Title	Project Number
GENERAL NOTES	100% CONSTRUCTION + BID DRAWINGS	EHRM-TASS	586-22-703
			Building Number: 5
Approved: Project Director	FULLY SPRINKLERED	Location	Drawing Number
		Issue Date: 10/06/2023; Checked: JG; Drawn: JCG	T-000

VA FORM 08-6231

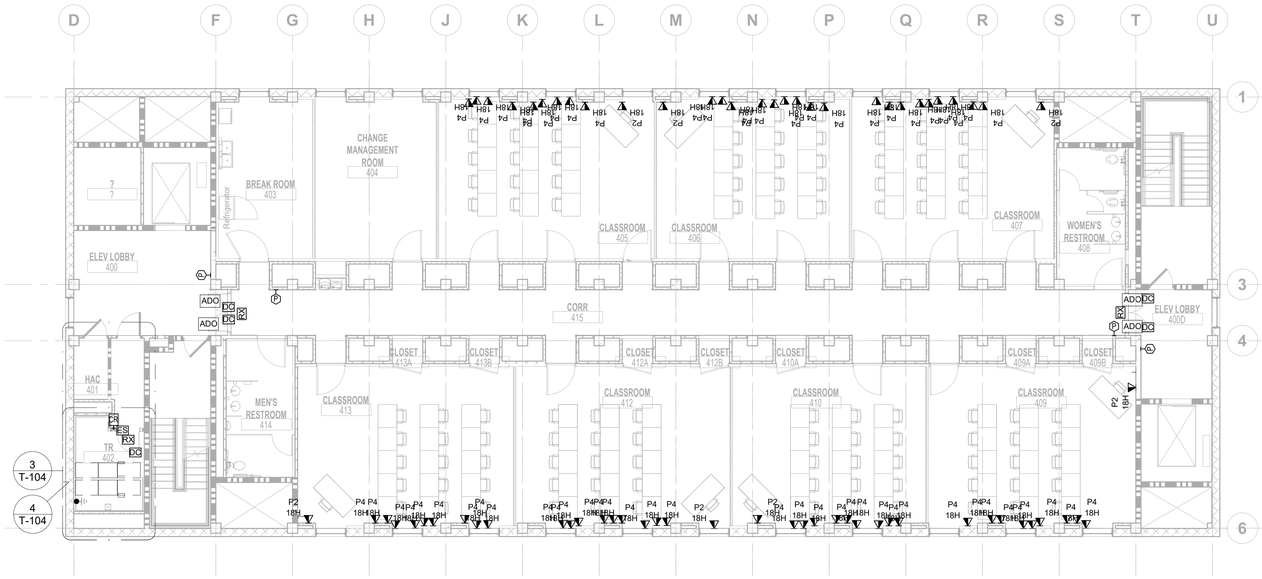

N

1 **ICT - 4TH FLOOR - TELECOMMUNICATION PLAN**

1/8" = 1'-0"

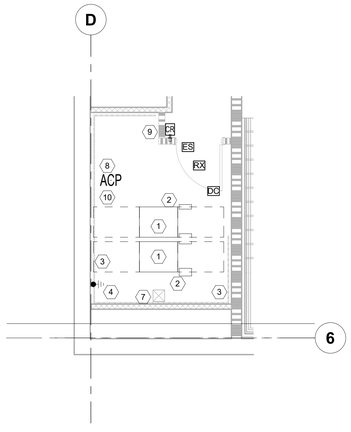

N

3 **ENLARGED TELECOM ROOM**

1/4" = 1'-0"

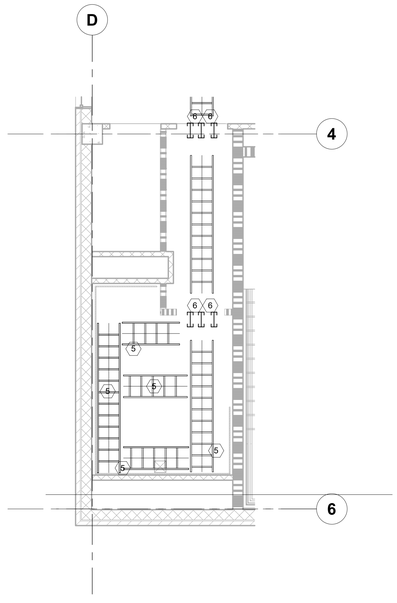

N

4 **ENLARGED TELECOM ROOM CEILING**

1/4" = 1'-0"

ELECTRICAL COMM & TECH GENERAL NOTES

A. REFER TO SHEET T000 FOR ABBREVIATIONS, ADDITIONAL NOTES AND SYMBOLS.

B. CONTRACTOR IS RESPONSIBLE FOR ALL TELE/DATA CONDUIT. TELE/DATA WIRING, TERMINATIONS, ANY REQUIRED PATCH PANELS, ETC NECESSARY FOR ALL SPECIAL SYSTEMS BY OTHERS.

C. CABLE TRAY SHALL BE WIRE MESH TYPE, 6 IN. DEEP 18 INCHES WIDE.

D. LOW VOLTAGE COMMUNICATIONS AND POWER CONDUITS SHALL CROSS AT 90 DEGREES AND MAINTAIN A MINIMUM 12 INCH SEPARATION BETWEEN CONDUITS AT ALL TIMES.

E. ALL CABLES SHALL BE CAT 6A. CONTRACTOR SHALL COORDINATE WITH VA OFFICE OF INFORMATION TECHNOLOGY FOR TERMINATION REQUIREMENTS FOR CABLES. COORDINATE REQUIREMENTS WITH MANUFACTURER. ALL DATA CABLING SHALL BE HOMERUN TO TR 402, UNLESS NOTED OTHERWISE.

F. CONTRACTOR SHALL PROVIDE ALL PENETRATIONS, SLEEVES AND SEALANTS AS REQUIRED THROUGH PARTITIONS TO ACCOMMODATE THE DATA CABLING. ANY PENETRATIONS THROUGH WALLS AND FLOORS SHALL BE PROPERLY SEALED AND TREATED TO MAINTAIN THE FIRE STOPPING RATING OF THE WALLS, FLOOR AND CEILINGS.

G. LOW VOLTAGE WIRING SHALL NOT LIE ON TOP OF CEILING GRID WIRING. REFER TO SPECIFICATIONS FOR SYSTEM SPECIFIC LOW VOLTAGE CABLING INSTALLATION REQUIREMENTS.

H. ELECTRICAL CONTRACTOR SHALL COORDINATE WITH OTHER TRADES AS REQUIRED TO KEEP THE PROJECT PROGRESSING.

TELECOM KEY NOTES:

1. PROVIDE TELECOM RACK.
2. PROVIDE 6" VERTICAL MANAGER.
3. PROVIDE PLYWOOD IN ALL TR WALLS, MINIMUN OF 3 WALLS SHOULD BE COVERED, 12" OFF FLOOR, 2 COATS INSTUMESCENT PAINT TOP COAT HIGH GLOSS WHITE.
4. PROVIDE GROUND BAR.
5. PROVIDE CABLE TRAY.
6. PROVIDE WALL SLEEVE WITH BUSHING FIRESTOP AND INNERDUCT FOR FIBER.
7. PROVIDE FLOOR SLEEVE WITH BUSHING FIRESTOP AND INNERDUCT FOR FIBER.
8. PROVIDE ACCESS CONTROL PANEL, COMPATIBLE WITH EXISTING
9. PROVIDE DUAL PORT WAO FOR NETWORK CONNECTIVITY FOR ELECTRICAL PANEL METERS .
10. PROVIDE SSTV CAMERA FACING DOOR.

Revisions:	Date:
100% CONSTRUCTION + BID DRAWINGS	10/06/2023
100% CONSTRUCTION + BID DRAWINGS	09/28/2023
95% CONSTRUCTION DESIGN	09/01/2023
65% DESIGN DEVELOPMENT	07/27/2023
35% SCHEMATIC DESIGN	06/26/2023

CONSULTANT

ARCHITECT/ENGINEER OF RECORD

BANCROFT ARCHITECTS + ENGINEERS
3300 Dundee Rd.
Northbrook, IL 60062
T: 847.952.9362
www.bancroft-ae.com
VA CONTRACT NO.36C77623C0052
Bancroft Project No. 22-131

STAMP

LICENSED PROFESSIONAL ENGINEER
JOSHUA MIKELS
062-072690
10/6/2023
OF ILLINOIS

Office of Construction and Facilities Management

VA U.S. Department of Veterans Affairs

REVIEW ONLY - NOT FOR CONSTRUCTION

Drawing Title: ICT - 4TH FLOOR - TELECOMMUNICATION PLAN	Phase: 100% CONSTRUCTION + BID DRAWINGS	Project Title: EHRM-TASS	Project Number: 586-22-703
Approved: Project Director			Building Number: 5
		Location: G.V. (Sonny) Montgomery VAMC	Drawing Number: T-104
		Issue Date: 10/06/2023 · Checked: JG · Drawn: JCG	

VA FORM 08-6231

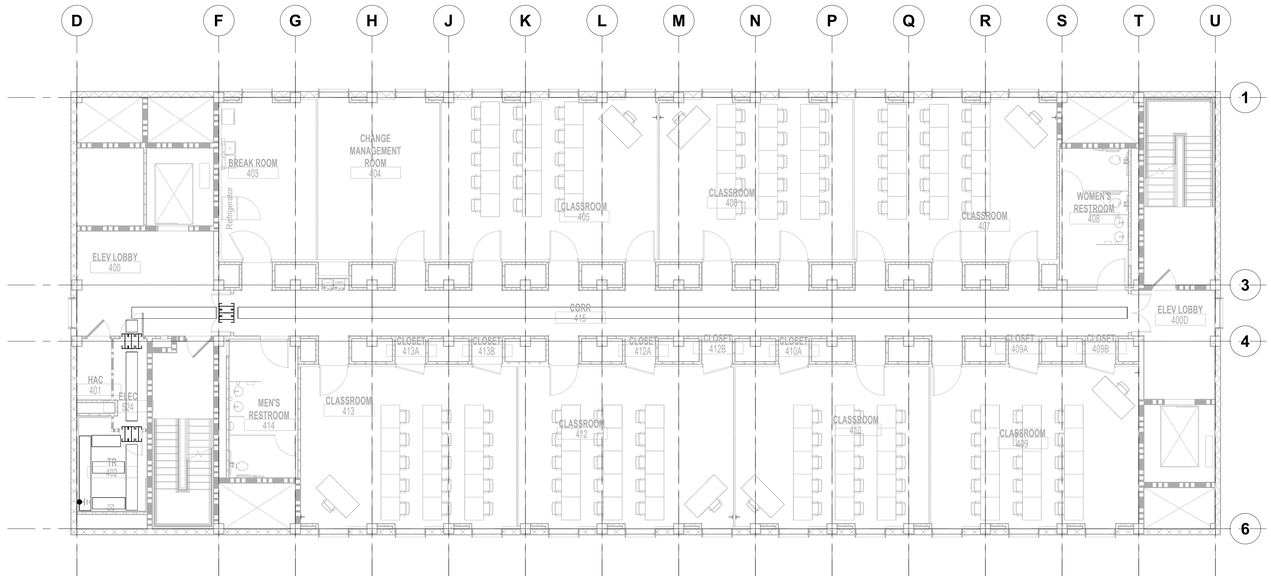

N

1 ICT - 4TH FLOOR - TELECOMMUNICATION PLAN

1/8" = 1'-0"

REVIEW ONLY - NOT FOR CONSTRUCTION

100% CONSTRUCTION + BID DRAWINGS	10/06/2023
100% CONSTRUCTION + BID DRAWINGS	09/28/2023
95% CONSTRUCTION DESIGN	09/01/2023
65% DESIGN DEVELOPMENT	07/27/2023
35% SCHEMATIC DESIGN	06/26/2023
Revisions:	Date:

CONSULTANT

ARCHITECT/ENGINEER OF RECORD

BANCROFT ARCHITECTS + ENGINEERS
3300 Dundee Rd.
Northbrook, IL 60062
T: 847.952.9362
www.bancroft-ae.com
VA CONTRACT NO.36C77623C0052
Bancroft Project No. 22-131

STAMP

LICENSED PROFESSIONAL ENGINEER
JOSHUA MIKELS
062-072690
10/6/2023
OF ILLINOIS

Office of Construction and Facilities Management

VA U.S. Department of Veterans Affairs

Drawing Title: ICT- 4TH FLOOR - CABLE TRAY PLAN

Approved: Project Director

Phase: 100% CONSTRUCTION + BID DRAWINGS

Project Title: EHRM-TASS

Project Number: 586-22-703

Building Number: 5

Location: G.V. (Sonny) Montgomery VAMC

Issue Date: 10/06/2023

Checked: Checker

Drawn: Author

Drawing Number: T-104CBT

VA FORM 08-6231

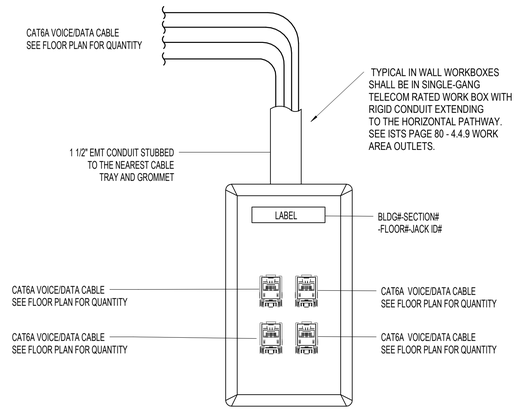

9 TYP (2,4 AND 6) PORTS FACEPLATE DETAIL

NOT TO SCALE

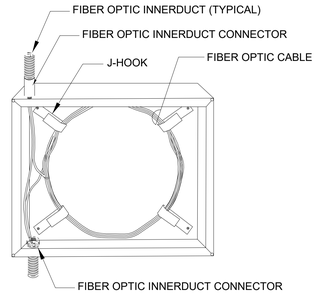

6 FIBER LOOP DETAIL

NOT TO SCALE

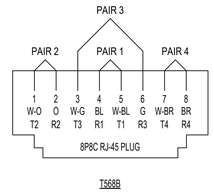

3 TELECOMMUNICATIONS T568B JACK WIRING DIAGRAM

NOT TO SCALE

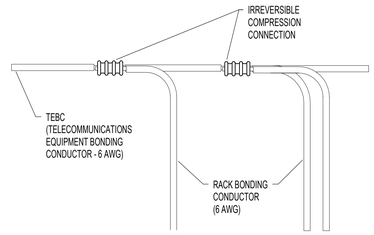

5 TELECOMMUNICATIONS BONDING REQUIREMENTS

NOT TO SCALE

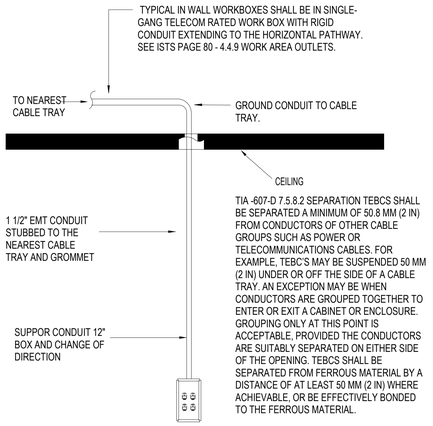

11 DATA PORT CONDUIT DROP

NOT TO SCALE

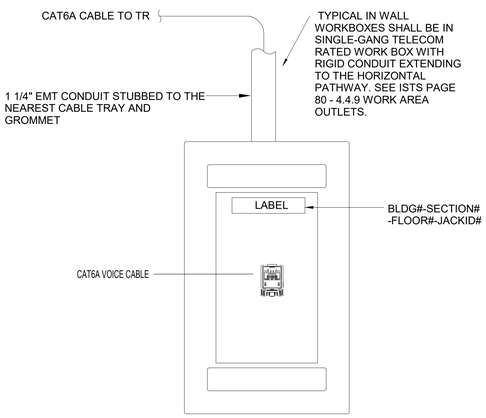

8 SINGLE PORT OUTLET DETAIL

NOT TO SCALE

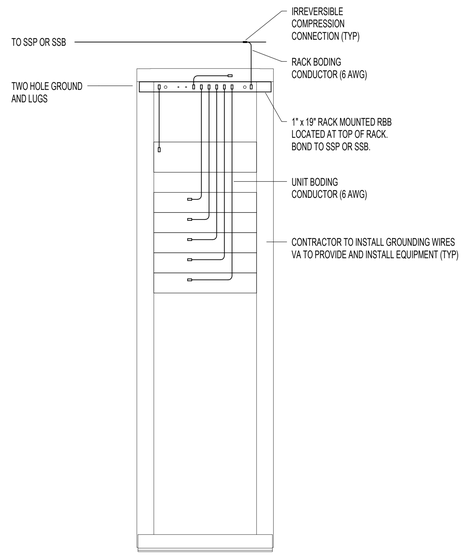

4 RACK BONDING DETAIL

NOT TO SCALE

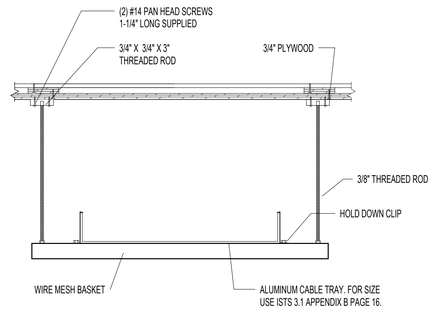

2 TYP WIRE MESH CABLE TRAY INSTALLATION DETAIL INSIDE TELECOM ROOM

NOT TO SCALE

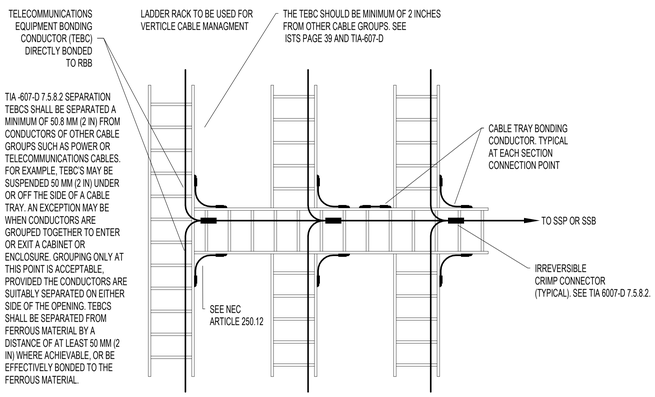

10 LADDER RACK TYP TRAY BONDING DETAIL

NOT TO SCALE

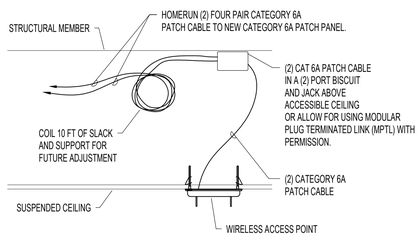

7 WIRELESS ACCESS POINT (WAP) DETAIL2

NOT TO SCALE

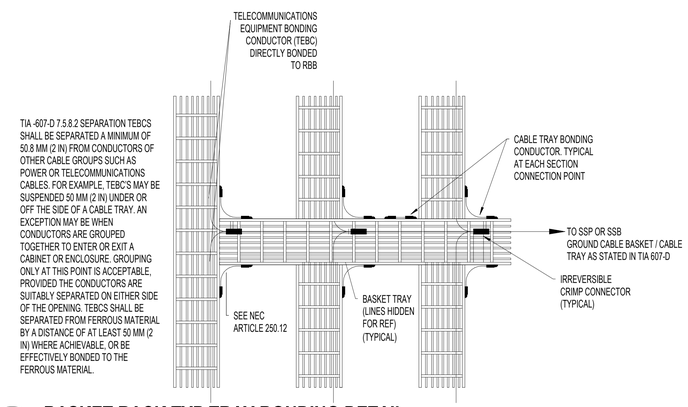

1 BASKET RACK TYP TRAY BONDING DETAIL

NOT TO SCALE

VA CONTRACT NO: 36C24521C0021

100% CONSTRUCTION + BID DRAWINGS	10/06/2023
100% CONSTRUCTION + BID DRAWINGS	09/28/2023
95% CONSTRUCTION DESIGN	09/01/2023
65% DESIGN DEVELOPMENT	07/27/2023
35% SCHEMATIC DESIGN	06/26/2023
Revisions:	Date:

CONSULTANT

ARCHITECT/ENGINEER OF RECORD

BANCROFT ARCHITECTS + ENGINEERS
700 Nicholas Blvd. Suite 300
Elk Grove Village, IL 60007
T: 847.952.9362 F: 847.952.9403
www.bancroft-ae.com

STAMP

LICENSED PROFESSIONAL ENGINEER JOSHUA WICELS 062-072690 10/6/2023 OF ILLINOIS

Office of Construction and Facilities Management

VA U.S. Department of Veterans Affairs

Drawing Title: ICT - DETAILS	Phase: 100% CONSTRUCTION + BID DRAWINGS	Project Title: EHRM-TASS	Project Number: 586-22-703
			Building Number: 5
Approved: Project Director	FULLY SPRINKLERED	Location	Drawing Number: T-501
		Issue Date: 10/06/2023 · Checked: JG · Drawn: JCG	

VA FORM 08-6231

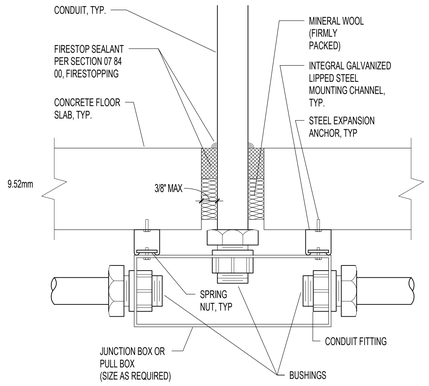

8 FLOOR SLAB PENETRATION DETAIL

NOT TO SCALE

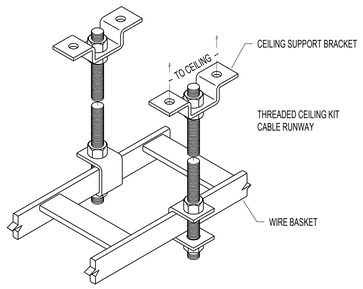

5 CABLE RUNWAY / LADDER CEILING SUPPORT DETAIL

NOT TO SCALE

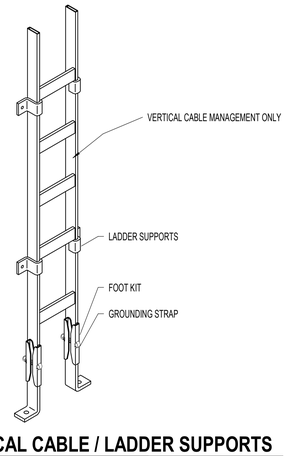

4 VERTICAL CABLE / LADDER SUPPORTS

NOT TO SCALE

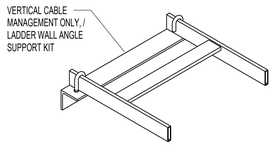

7 CABLE RUNWAY / LADDER WALL ANGLE SUPPORT

NOT TO SCALE

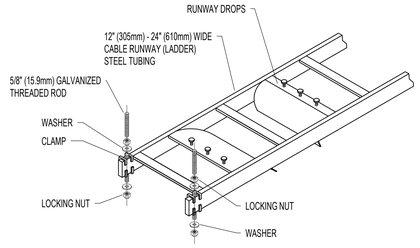

NOTE: VERTICAL CABLE MANAGEMENT ONLY.
SUPPORT RUNWAY AT 4 FT (1.5M)
INTERVALS. REFER TO ELECTRICAL
DRAWINGS FOR SEISMIC REQUIREMENTS

6 CABINET CABLE RUNWAY / LADDER TRAY SUPPORT

NOT TO SCALE

NOTES:
CABLE TRAYS - TYPES
HORIZONTAL - BASKET
VERTICAL - LADDER

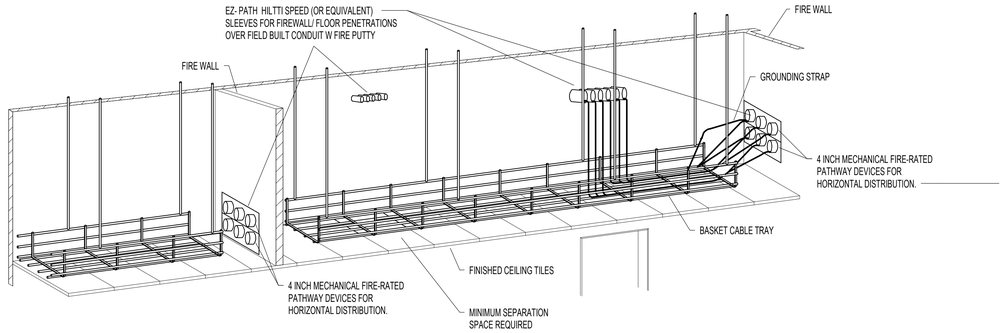

2 CABLE TRAY WITH FIRE WALL PENETRATIONS

NOT TO SCALE

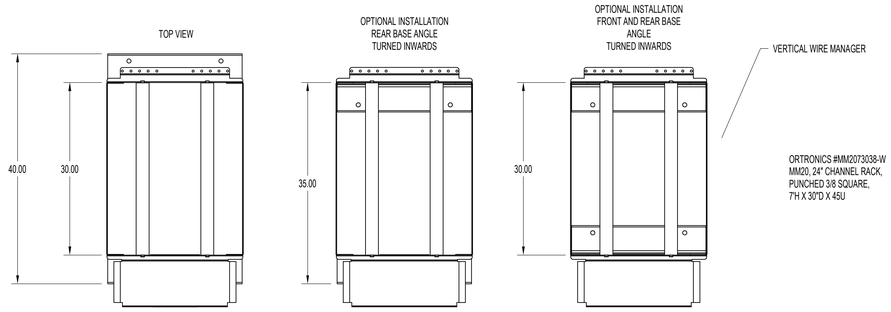

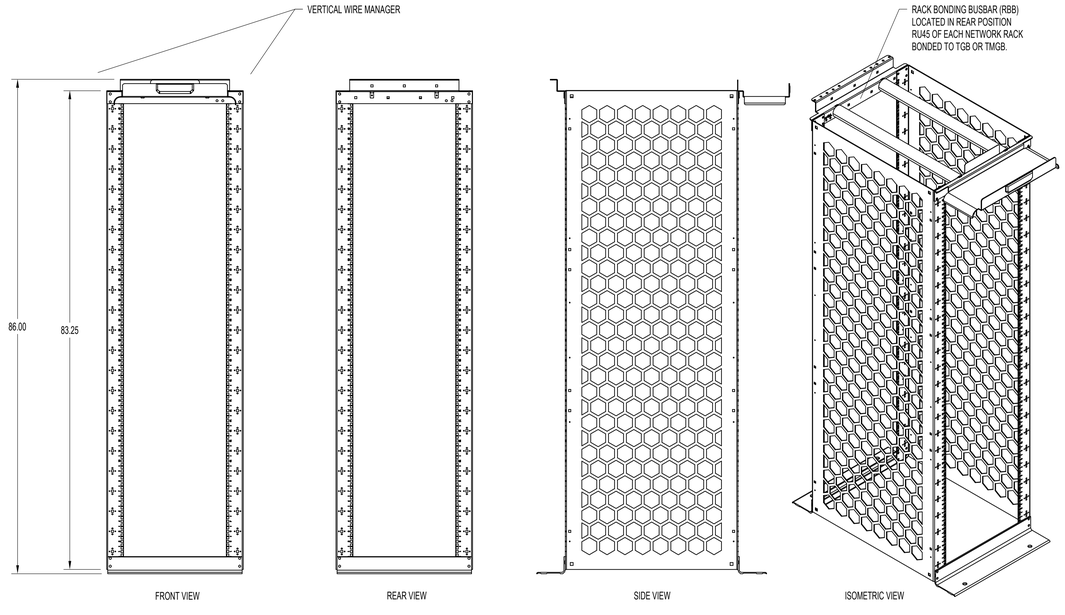

1 ORTRONICS-W DETAIL2

NOT TO SCALE

VA CONTRACT NO: 36C24521C0021

Revisions:	Date:
100% CONSTRUCTION + BID DRAWINGS	10/06/2023
100% CONSTRUCTION + BID DRAWINGS	09/28/2023
95% CONSTRUCTION DESIGN	09/01/2023
65% DESIGN DEVELOPMENT	07/27/2023
35% SCHEMATIC DESIGN	06/26/2023

CONSULTANT

ARCHITECT/ENGINEER OF RECORD

BANCROFT ARCHITECTS + ENGINEERS
700 Nicholas Blvd, Suite 300
Elk Grove Village, IL 60007
T: 847.952.9362 F: 847.952.9403
www.bancroft-ae.com

STAMP

LICENSED PROFESSIONAL ENGINEER JOSHUA MIKELS 062-072690 10/6/2023 OF ILLINOIS

Office of Construction and Facilities Management

VA U.S. Department of Veterans Affairs

Drawing Title	Phase	Project Title	Project Number
ICT- DETAILS	100% CONSTRUCTION + BID DRAWINGS	EHRM-TASS	586-22-703
			Building Number: 5
Approved: Project Director	FULLY SPRINKLERED	Location	Drawing Number
		Issue Date: 10/06/2023 / Checked: JT / Drawn: JC	T-502

VA FORM 08-6231

NOTES:
A. CONTRACTOR SHALL GROUND ALL VA INSTALLED EQUIPMENT TO RBB/SBB.
B. EQUIPMENT, DEVICES AND FIXTURES CANNOT BE SUPPORTED BY DRYWALL/ GYPSUM BOARD ALONE.
C. COMPLIANT BUSBAR ANSI/EIA/TIA CHATSWORTH P/N:40158-012.
D. ALL CONNECTIONS ARE DOUBLE LUG.
E. GROUND SDT FLOORING TO SBB.

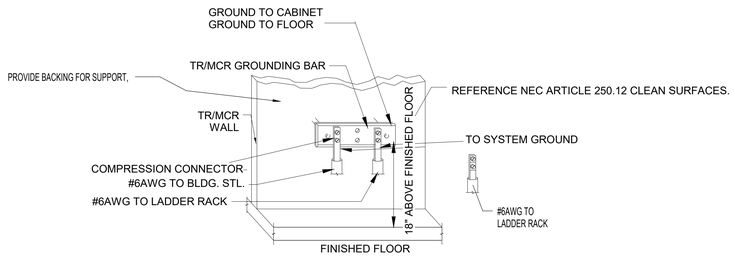

2 GROUND BUS DETAIL

NOT TO SCALE

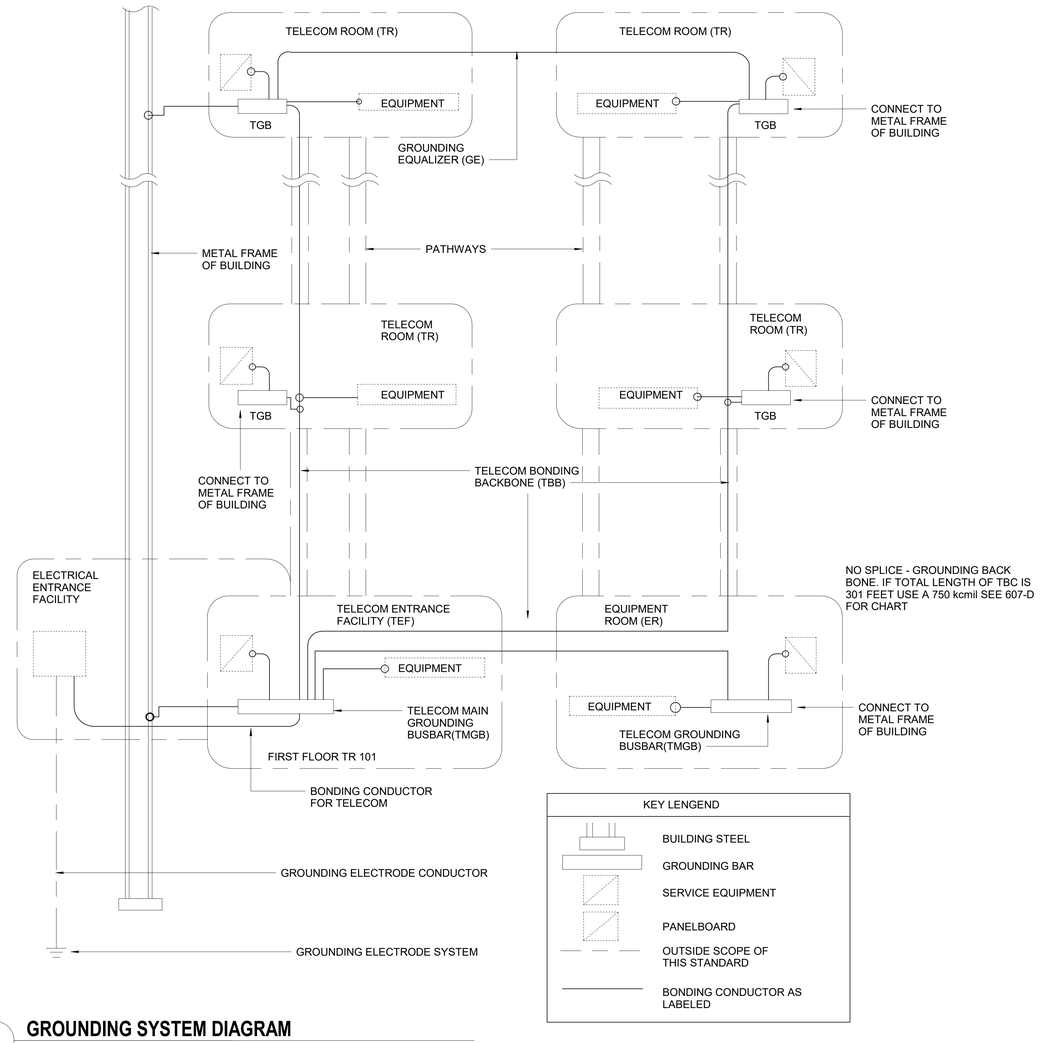

1 GROUNDING SYSTEM DIAGRAM

NOT TO SCALE

VA CONTRACT NO: 36C24521C0021

100% CONSTRUCTION + BID DRAWINGS	10/06/2023
100% CONSTRUCTION + BID DRAWINGS	09/28/2023
95% CONSTRUCTION DESIGN	09/01/2023
65% DESIGN DEVELOPMENT	07/27/2023
35% SCHEMATIC DESIGN	06/26/2023
Revisions:	Date:

CONSULTANT

ARCHITECT/ENGINEER OF RECORD

BANCROFT ARCHITECTS + ENGINEERS
700 Nicholas Blvd, Suite 300
Elk Grove Village, IL 60007
T:847.952.9362 F:847.952.9403
www.bancroft-ae.com

STAMP

LICENSED PROFESSIONAL ENGINEER JOSHUA MIKELS 062-072690 10/6/2023 OF ILLINOIS

Office of Construction and Facilities Management

VA U.S. Department of Veterans Affairs

Drawing Title	Phase	Project Title	Project Number
ICT - DETAILS	100% CONSTRUCTION + BID DRAWINGS	EHRM-TASS	586-22-703
			Building Number: 5
Approved: Project Director	FULLY SPRINKLERED	Location	Drawing Number
		Issue Date: 10/06/2023 / Checked: JM / Drawn: JC	T-503

VA FORM 08-6231

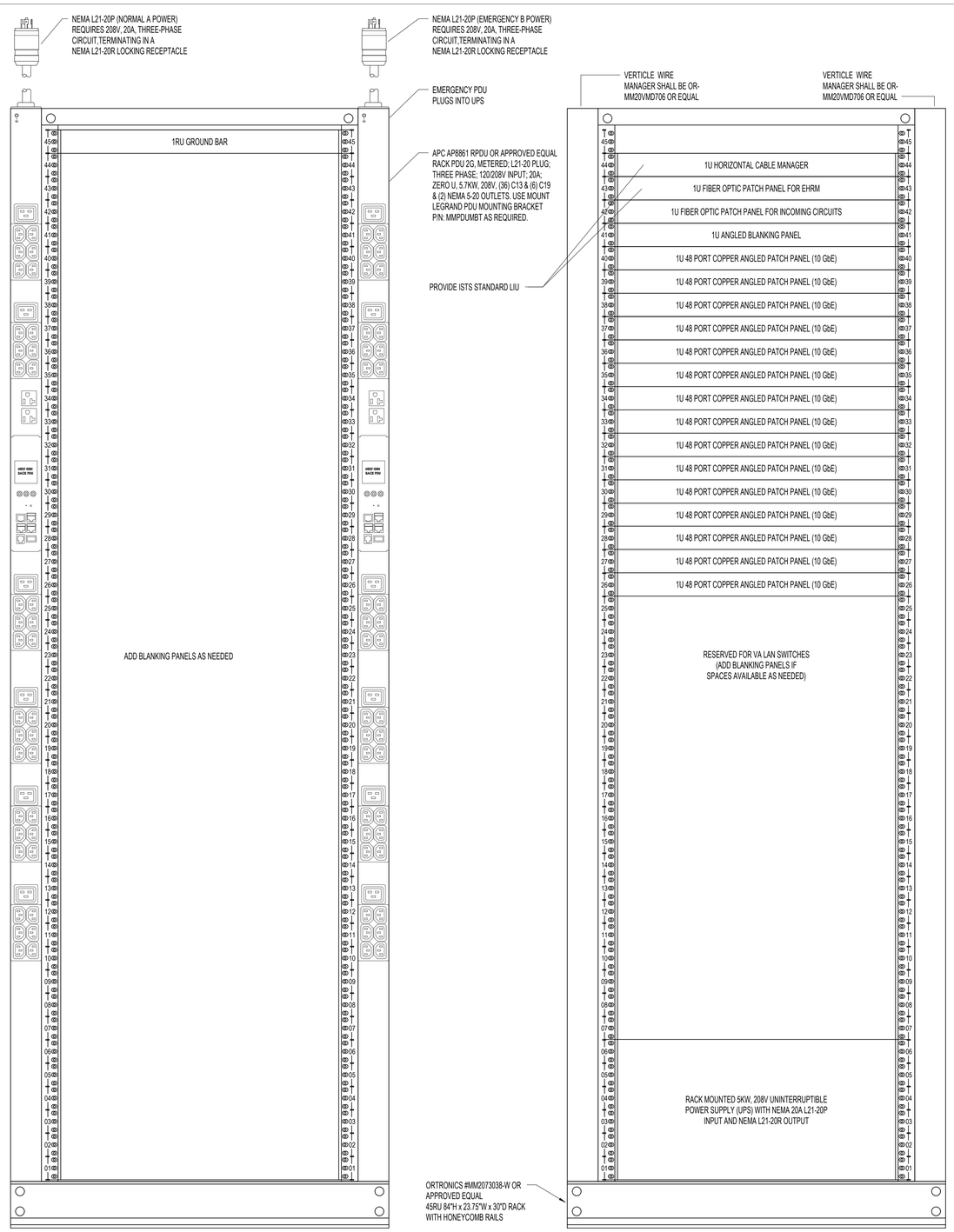

RACK #1 - BACK

RACK #1 - FRONT

NOTES:

A. PATCH PANELS SHOWN FOR REFERENCE. PROVIDE NUMBER OF PATCH PANELS AS REQUIRED.
B. LAN SWITCHES AND ROUTER TO BE FURNISHED BY VA. SHOWN FOR REFERENCE ONLY. COORDINATE WITH VA IT DEPARTMENT.
C. PROVIDE 6 INCH WIDE VERTICAL CABLE MANAGER ORTRONIC MM20VMD706-W OR APPROVED EQUAL AND OTHER ACCESSORIES AS REQUIRED.
D. PROVIDE ALL MOUNTING HARDWARE AS REQUIRED.

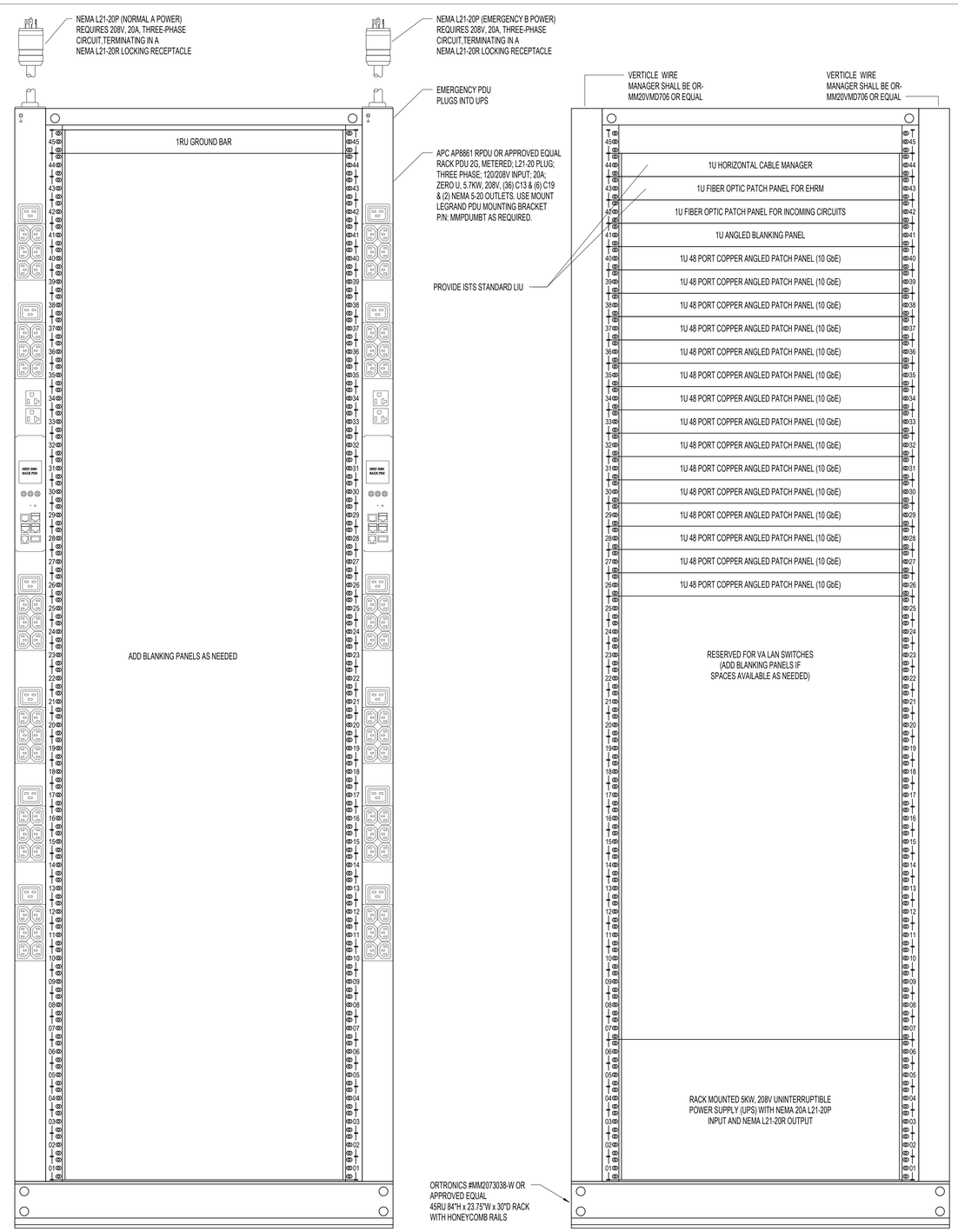

RACK #2 - BACK

RACK #2 - FRONT

NOTES:

A. PATCH PANELS SHOWN FOR REFERENCE. PROVIDE NUMBER OF PATCH PANELS AS REQUIRED.
B. LAN SWITCHES AND ROUTER TO BE FURNISHED BY VA. SHOWN FOR REFERENCE ONLY. COORDINATE WITH VA IT DEPARTMENT.
C. PROVIDE 6 INCH WIDE VERTICAL CABLE MANAGER ORTRONIC MM20VMD706-W OR APPROVED EQUAL AND OTHER ACCESSORIES AS REQUIRED.
D. PROVIDE ALL MOUNTING HARDWARE AS REQUIRED.

1 SINGLE RACK ELEVATION DETAIL

NOT TO SCALE

VA CONTRACT NO: 36C24521C0021

100% CONSTRUCTION + BID DRAWINGS	10/06/2023
100% CONSTRUCTION + BID DRAWINGS	09/28/2023
95% CONSTRUCTION DESIGN	09/01/2023
65% DESIGN DEVELOPMENT	07/27/2023
35% SCHEMATIC DESIGN	06/26/2023
Revisions:	Date:

CONSULTANT

ARCHITECT/ENGINEER OF RECORD

BANCROFT ARCHITECTS + ENGINEERS
700 Nicholas Blvd. Suite 300
Elk Grove Village, IL 60007
T:847.952.9362 F:847.952.9403
www.bancroft-ae.com

STAMP

LICENSED PROFESSIONAL ENGINEER JOSHUA MIKELS 062-072690 OF ILLINOIS 10/6/2023

Office of Construction and Facilities Management

VA U.S. Department of Veterans Affairs

Drawing Title	Phase	Project Title	Project Number
ICT - DETAILS	100% CONSTRUCTION + BID DRAWINGS	EHRM-TASS	586-22-703
			Building Number: 5
Approved: Project Director	FULLY SPRINKLERED	Location	Drawing Number: T-504
		Issue Date: 10/06/2023 · Checked: JT · Drawn: JC	

VA FORM 08-6231

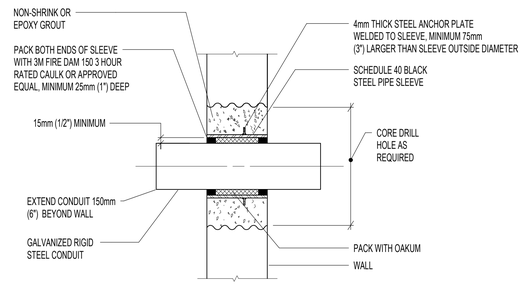

4 PIPE SLEEVE THRU WALL DETAIL2

NOT TO SCALE

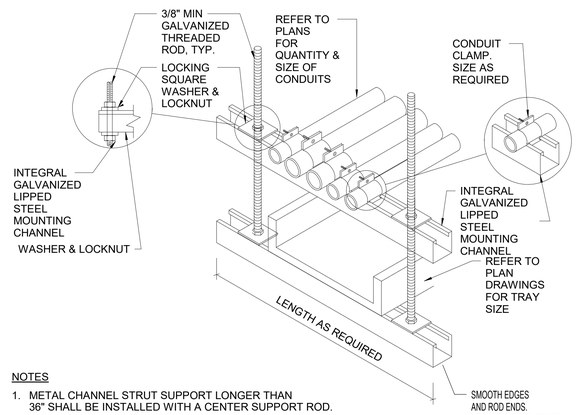

NOTES

1. METAL CHANNEL STRUT SUPPORT LONGER THAN 36" SHALL BE INSTALLED WITH A CENTER SUPPORT ROD.
2. FASTEN THREADED ROD TO STRUCTURE BY APPROVED METHOD PER SPECIFICATION 26 05 33, RACEWAYS AND BOXES FOR ELECTRICAL SYSTEMS. FIELD VERIFY EXACT CONDITIONS.
3. IF APPLICABLE FOR TRAPEZE INSTALLATIONS IN SEISMIC AREAS REFER TO SPECIFICATION SECTION 10 05 41, SEISMIC RESTRAINT REQUIREMENTS FOR NON-STRUCTURAL COMPONENTS.

3 26-P-CONDUIT AND TRAY TRAPEZE MOUNTING DETAIL2

NOT TO SCALE

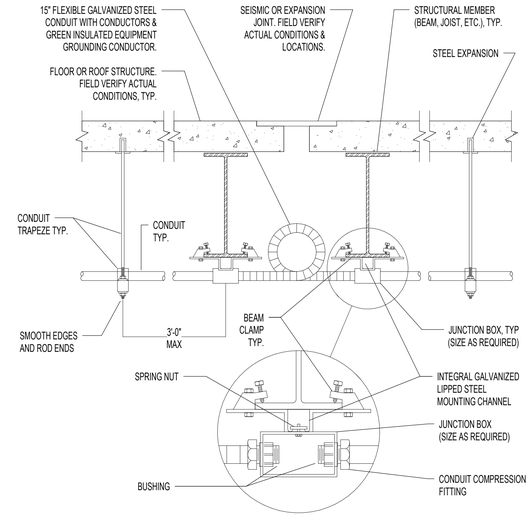

2 CONDUIT JOINT CROSSING DETAIL2

NOT TO SCALE

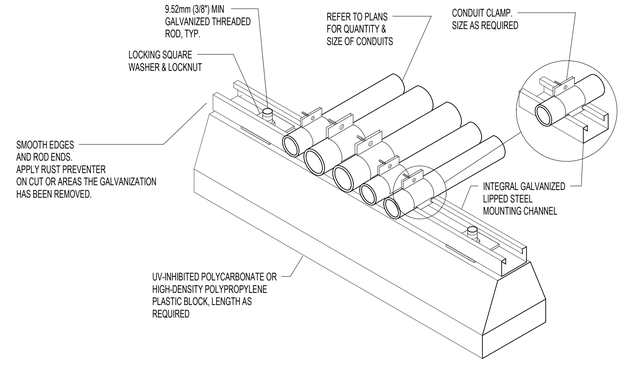

1 ROOF CONDUIT SUPPORT DETAIL2

NOT TO SCALE

VA CONTRACT NO: 36C24521C0021

Revisions:	Date:
100% CONSTRUCTION + BID DRAWINGS	10/06/2023
100% CONSTRUCTION + BID DRAWINGS	09/28/2023
95% CONSTRUCTION DESIGN	09/01/2023
65% DESIGN DEVELOPMENT	07/27/2023
35% SCHEMATIC DESIGN	06/26/2023

CONSULTANT

ARCHITECT/ENGINEER OF RECORD

BANCROFT ARCHITECTS + ENGINEERS
700 Nicholas Blvd, Suite 300
Elk Grove Village, IL 60007
T: 847.952.9362 F: 847.952.9403
www.bancroft-ae.com

STAMP

LICENSED PROFESSIONAL ENGINEER JOSHUA NIKELS 062-072690 10/6/2023 OF ILLINOIS

Office of Construction and Facilities Management

VA U.S. Department of Veterans Affairs

Drawing Title	Phase	Project Title	Project Number
ICT - DETAILS	100% CONSTRUCTION + BID DRAWINGS	EHRM-TASS	586-22-703
			Building Number: 5
Approved: Project Director	FULLY SPRINKLERED	Location	Drawing Number: T-505
		Issue Date: 10/06/2023 · Checked: JG · Drawn: JCG	

VA FORM 08-6231

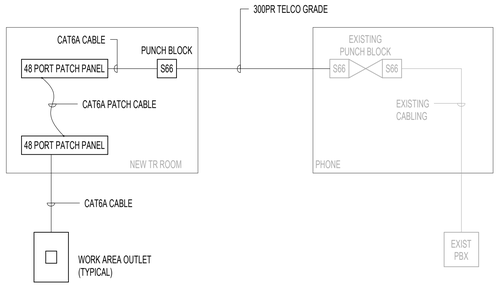

3 TELEPHONE SYSTEM DIAGRAM

NOT TO SCALE

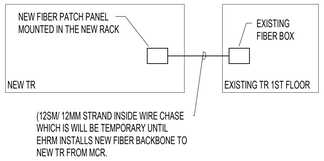

2 FIBER OPTIC TYPICAL BACKBONE

NOT TO SCALE

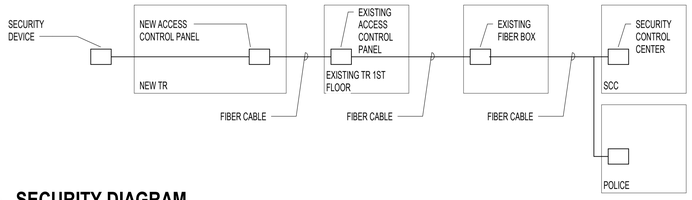

1 SECURITY DIAGRAM

NOT TO SCALE

VA CONTRACT NO: 36C24521C0021

100% CONSTRUCTION + BID DRAWINGS	10/06/2023
100% CONSTRUCTION + BID DRAWINGS	09/28/2023
95% CONSTRUCTION DESIGN	09/01/2023
65% DESIGN DEVELOPMENT	07/27/2023
35% SCHEMATIC DESIGN	06/26/2023
Revisions:	Date:

CONSULTANT

ARCHITECT/ENGINEER OF RECORD

BANCROFT ARCHITECTS + ENGINEERS
700 Nicholas Blvd, Suite 300
Elk Grove Village, IL 60007
T: 847.952.9362 F: 847.952.9403
www.bancroft-ae.com

STAMP

LICENSED PROFESSIONAL ENGINEER
JOSHUA MIELS
062-072690
10/6/2023
OF ILLINOIS

Office of Construction and Facilities Management

VA U.S. Department of Veterans Affairs

Drawing Title	Phase	Project Title	Project Number
ICT TYP RISERS	100% CONSTRUCTION + BID DRAWINGS	EHRM-TASS	586-22-703
			Building Number: 5
Approved: Project Director	FULLY SPRINKLERED	Location	Drawing Number
		Issue Date: 10/06/2023 / Checked: JG / Drawn: JCG	T-601

VA FORM 08-6231

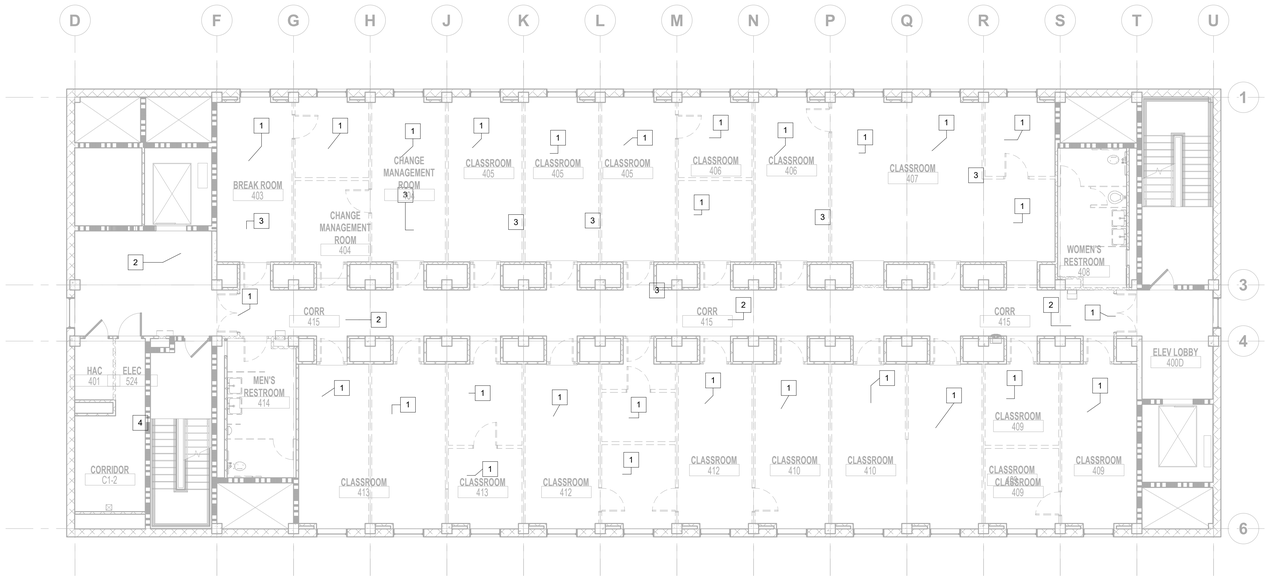

N

2 ICT - 4TH FLOOR - TELECOMMUNICATION DEMOLITION PLAN

1/8" = 1'-0"

0 4' 8' 16'

ELECTRICAL COMM & TECH GENERAL NOTES

A. REFER TO SHEET T000 FOR ABBREVIATIONS, ADDITIONAL NOTES AND SYMBOLS.

B. CONTRACTOR IS RESPONSIBLE FOR ALL TELE/DATA CONDUIT. TELE/DATA WIRING, TERMINATIONS, ANY REQUIRED PATCH PANELS, ETC NECESSARY FOR ALL SPECIAL SYSTEMS BY OTHERS.

C. CABLE TRAY SHALL BE WIRE MESH TYPE, 6 IN. DEEP 18 INCHES WIDE.

D. LOW VOLTAGE COMMUNICATIONS AND POWER CONDUITS SHALL CROSS AT 90 DEGREES AND MAINTAIN A MINIMUM 12 INCH SEPARATION BETWEEN CONDUITS AT ALL TIMES.

E. ALL CABLES SHALL BE CAT 6A. CONTRACTOR SHALL COORDINATE WITH VA OFFICE OF INFORMATION TECHNOLOGY FOR TERMINATION REQUIREMENTS FOR CABLES. COORDINATE REQUIREMENTS WITH MANUFACTURER. ALL DATA CABLING SHALL BE HOMERUN TO TR 402, UNLESS NOTED OTHERWISE.

F. CONTRACTOR SHALL PROVIDE ALL PENETRATIONS, SLEEVES AND SEALANTS AS REQUIRED THROUGH PARTITIONS TO ACCOMMODATE THE DATA CABLING. ANY PENETRATIONS THROUGH WALLS AND FLOORS SHALL BE PROPERLY SEALED AND TREATED TO MAINTAIN THE FIRE STOPPING RATING OF THE WALLS, FLOOR AND CEILINGS.

G. LOW VOLTAGE WIRING SHALL NOT LIE ON TOP OF CEILING GRID WIRING. REFER TO SPECIFICATIONS FOR SYSTEM SPECIFIC LOW VOLTAGE CABLING INSTALLATION REQUIREMENTS.

H. ELECTRICAL CONTRACTOR SHALL COORDINATE WITH OTHER TRADES AS REQUIRED TO KEEP THE PROJECT PROGRESSING.

KEYNOTES

1 All TELEPHONY, DATA WIRE, CONDUIT, CABLING, ETC. SHALL BE REMOVED TO POINT OF ORIGIN.

2 ALL CABLE TO WIRELESS ACCESS POINTS (WAPS) SHALL BE REPLACED WITH CAT 6A CABLES. PROVIDE A NEW (2) CAT 6A SINGLE JACK SURFACE MOUNTED BOX ABOVE THE CEILING WHERE EXISTING WAPS ARE LOCATED. ALL EXISTING WIRELESS ACCESS POINT DEVICES SHOULD BE REMOVE DURING CONSTRUCTION AND REINSTALLED IN EXISTING LOCATION WITH NEW CABLING TO NEW TR.

3 COORDINATE ALL REQUIRED EQUIPMENT SHUTDOWNS WITH VA REPRESENTATIVE PRIOR TO PROCEEDING TO DISCONNECT EQUIPMENT.

4 REMOVE 110 BLOCKS IF ALL WAO TELEPHONE CABLE IS COMPLETELY REMOVE. DEMO STATION CABLE TO BUILDING ENTRANCE / SPLICE POINT.

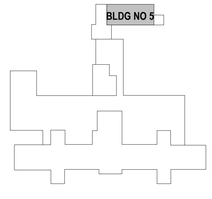

KEYPLAN

REVIEW ONLY - NOT FOR CONSTRUCTION

100% CONSTRUCTION + BID DRAWINGS	10/06/2023
100% CONSTRUCTION + BID DRAWINGS	09/28/2023
95% CONSTRUCTION DESIGN	09/01/2023
65% DESIGN DEVELOPMENT	07/27/2023
35% SCHEMATIC DESIGN	06/26/2023
Revisions:	Date:

CONSULTANT

ARCHITECT/ENGINEER OF RECORD

BANCROFT ARCHITECTS + ENGINEERS
3300 Dundee Rd.
Northbrook, IL 60062
T: 847.952.9362
www.bancroft-ae.com
VA CONTRACT NO.36C77623C0052
Bancroft Project No. 22-131

STAMP

LICENSED PROFESSIONAL ENGINEER
JOSHUA MIKELS
062-072690
10/6/2023
OF ILLINOIS

Office of Construction and Facilities Management

VA U.S. Department of Veterans Affairs

Drawing Title: ICT- 4TH FLOOR - TELECOMMUNICATIONS DEMOLITION PLAN

Approved: Project Director

Phase: 100% CONSTRUCTION + BID DRAWINGS

Project Title: EHRM-TASS

Project Number: 586-22-703

Building Number: 5

Location: G.V. (Sonny) Montgomery VAMC

Issue Date: 10/06/2023

Checked: JG

Drawn: JCG

Drawing Number: TD-104

VA FORM 08-6231