U.S. DEPARTMENT OF HOMELAND SECURITY

FT BENNING, GEORGIA
IMMIGRATION & CUSTOMS ENFORCEMENT (ICE)
ADVANCED TRAINING OPERATIONS CENTER
MAIN CLASSROOM BUILDING

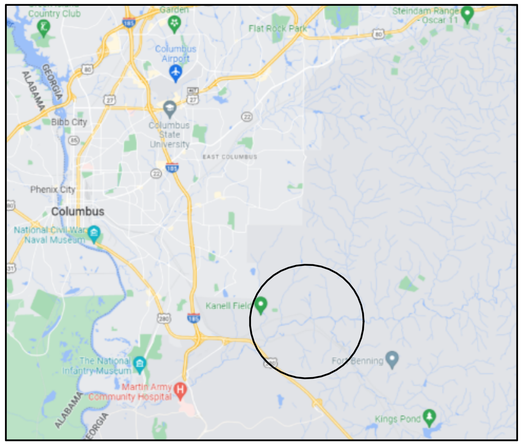

VICINITY MAP

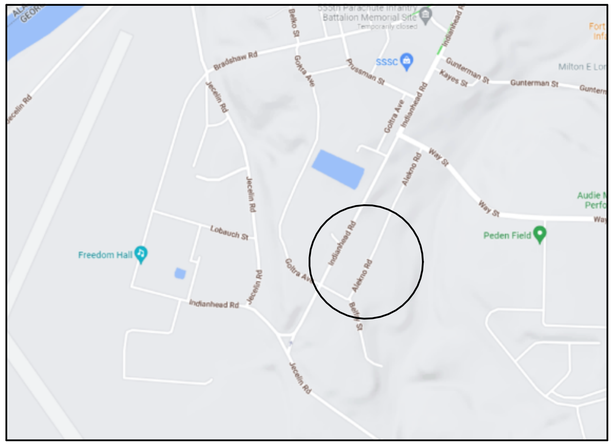

LOCATION MAP

SOLICITATION NO.: 70CMSW22Q00000001
CONTRACT NO.: 70Z05018DKZFNPL08

ISSUE DATE: 01-06-2023
FINAL SUBMITTAL (35%)

MARK	DESCRIPTION	DATE

US IMMIGRATION AND CUSTOMS ENFORCEMENT (ICE)
9495 DELEGATED DRIVE
ORLANDO, FL 32837

KZF DESIGN
700 BROADWAY STREET
CINCINNATI, OH 45202

DESIGNED BY: SCHMITZ
DRAWN BY: SCHMITZ
CHECKED BY: SCHMITZ
SUBMITTED BY: HUTZEL
SIZE: ANSI D
ISSUE DATE: 01-06-2023
SOLICITATION NO.: 70CMSW22Q00000001
CONTRACT NO.: 70Z05018DKZFNPL08

FT BENNING, GEORGIA
IMMIGRATION & CUSTOMS ENFORCEMENT (ICE)

COVER SHEET

SHEET ID
MCB
G-000

JAN 06, 2023 - FINAL SUBMITTAL 35%)

NOT FOR CONSTRUCTION

I. APPLICABLE CODES

UFC CODE:	UFC 3-600-01 FIRE PROTECTION ENGINEERING FOR FACILITIES, WITH CHANGE 6 UFC 1-200-01 DOD BUILDING CODE UFC 4-021-01 DESIGN AND O&M: MASS NOTOFICATION SYSTEMS, WITH CHANGE 1
BUILDING CODE:	INTERNATIONAL BUILDING CODE (IBC 2018)
FIRE CODE:	INTERNATIONAL FIRE CODE (IFC 2018)
MECHANICAL CODE:	INTERNATIONAL MECHANICAL CODE (IMC 2018)
PLUMBING CODE:	INTERNATIONAL PLUMBING CODE (IPC 2018)
NFPA CODES:	13 (2019), 72 (2019), 101 FOR MEANS OF EGRESS REQUIREMENTS (2018)

II. BUILDING CLASSIFICATIONS AND LIMITATIONS

A. PRIMARY USE GROUP: NON-SEPARATED MIXED USE IBC 508.3. SEE CODE ANALYSIS FOR FURTHER DETAIL.

BUILDING	CONSTRUCTION TYPE	USE GROUP	SPRINKLER	ALLOWABLE HEIGHTS & STORIES	ACTUAL HEIGHTS & STORIES	ALLOWABLE AREA	ACTUAL AREA
CLASSROOM	IIB	B, A-3, S-2,	YES	75ft., 3 STORIES	30ft - 8in, 3 STORIES	28,500ft²	17634.6ft²

B. CONSTRUCTION TYPE

THE BUILDING WILL BE CONSTRUCTION TYPE IIB.

III. MEANS OF EGRESS

A. OCCUPANCY LOAD FACTORS

BUILDING	NFPA 101 TABLE 7.3.1.2:: MAXIMUM FLOOR AREA ALLOWANCES PER OCCUPANT
ACCESSORY STORAGE / MEP SPACES	500 GROSS
ASSEMBLY - UNCONCENTRATED (TABLES & CHAIRS)	15 NET
BUSINESS, CIRCULATION	150 GROSS
BUSINESS - CONCENTRATED	50 GROSS
LOCKER ROOMS	50 GROSS

B. OCCUPANCY LOAD CALCULATIONS AND EGRESS

REQUIREMENTS EGRESS WIDTH BY CODE

CODE	LEVEL COMPONENTS CAPACITY FACTOR
NFPA 101 TABLE 7.3.1.1	0.2 INCHES PER PERSON

C = CAPACITY, IN PERSONS, ROUNDED TO THE NEAREST INTEGER.

IV CONSTRUCTION

A. SPACES WITH ONE EXIT OR EXIT ACCESS DOORWAY

OCCUPANCY	MAXIMUM COMMON PATH OF EGRESS TRAVEL DISTANCE
	WITH SPRINKLER SYSTEM (FEET)
A	75ft FOR LESS THAN OR EQUAL TO 50 OCCUPANTS, 20ft FOR MORE THAN 50 OCCUPANTS. PER NFPA SECTION 12.2.5.1.2
B	100ft
S	100ft

B MAXIMUM TRAVEL DISTANCES
DISTANCES ARE BASED ON BUILDING BEING PROTECTED BY AN AUTOMATIC SPRINKLER SYSTEM.

	BUSINESS	ASSEMBLY	STORAGE S-2
EXIT ACCESS TRAVEL DISTANCE	300ft	250ft	400ft

C. FIRE-RESISTANCE RATING REQUIREMENTS FOR BUILDING ELEMENTS (IBC TABLE 601)

BUILDING ELEMENT	FIRE RATING (HOURS)
	TYPE IIB
STRUCTURAL FRAME * INCLUDING COLUMNS, GIRDERS, TRUSSES	0
COLUMNS	0
EXTERIOR WALLS, BASED ON FIRE SEPARATION DISTANCE (FSD)	X < 5 = 1 HOUR 5 ≤ X < 10 = 1 HOUR 10 ≥ = 0 HOUR
BEARING INTERIOR WALLS AND PARTITIONS	0
FLOOR CONSTRUCTION INCLUDING SUPPORTING BEAMS, JOISTS	0
FLOOR CONSTRUCTION INCLUDING SUPPORTING BEAMS, COLUMNS - ELECTRICAL ROOMS, STAIRWELL, ELEVATOR CONTROL ROOM, ANY OTHER RATED CONTRUCTION	1 HOUR
ROOF CONSTRUCTION INCLUDING SUPPORTING BEAMS, JOISTS	0

U.S. DEPARTMENT OF HOMELAND SECURITY

MARK	DESCRIPTION	DATE

ISSUE DATE: JAN 06,2023
SOLICITATION NO.: 70CMSW22Q00000001
CONTRACT NO.: 70Z05018DKZFNPL08

DESIGNED BY: K Lawrence
DRAWN BY: A Lockwood
CHECKED BY: E Babcock
SUBMITTED BY: HUTZEL ANSI D

US IMMIGRATION AND CUSTOMS ENFORCEMENT (ICE)
9485 DEERFIELD DRIVE
ORLANDO, FL 32827

KZF DESIGN
700 BROADWAY STREET
CINCINNATI, OH 45202

FT BENNING, GEORGIA
IMMIGRATION & CUSTOM'S ENFORCEMENT (ICE)

BUILDING CODE SUMMARY

SHEET ID
MCB
G-002

JAN 06, 2023 - FINAL SUBMITTAL (35%)

NOT FOR CONSTRUCTION

OCCUPANT LOAD TABLE - LEVEL 1

OCCUPANCY USE	AREA	OCCUPANT LOAD FACTOR	OCCUPANT LOAD
ASSEMBLY - UNCONCENTRATED	2713.8 ft²	15	249
BUSINESS	1993.3 ft²	100	17
CIRCULATION	2624.9 ft²	150	18
CLASSROOM	2466.2 ft²	20	124
LOCKER ROOM	4771.5 ft²	50	97
STORAGE/ MECHANICAL	2501.5 ft²	500	11
TOTALS	17071.1 ft²		516

EXIT TABLE - LEVEL 1

STAIR / EXIT	DOOR WIDTH	DOOR WIDTH FACTOR	DOOR CAPACITY	EXIT CAPACITY	ACTUAL USE
EXIT 100	67	0.2	335	335	140
EXIT 115	67	0.2	335	335	2
EXIT 116	34	0.2	170	170	1
EXIT 118B	34	0.2	170	170	62
EXIT 119B	34	0.2	170	170	62
EXIT 121	67	0.2	335	335	2
EXIT 122A	67	0.2	335	335	108
EXIT 122B	67	0.2	335	335	139
TOTALS				2185	516

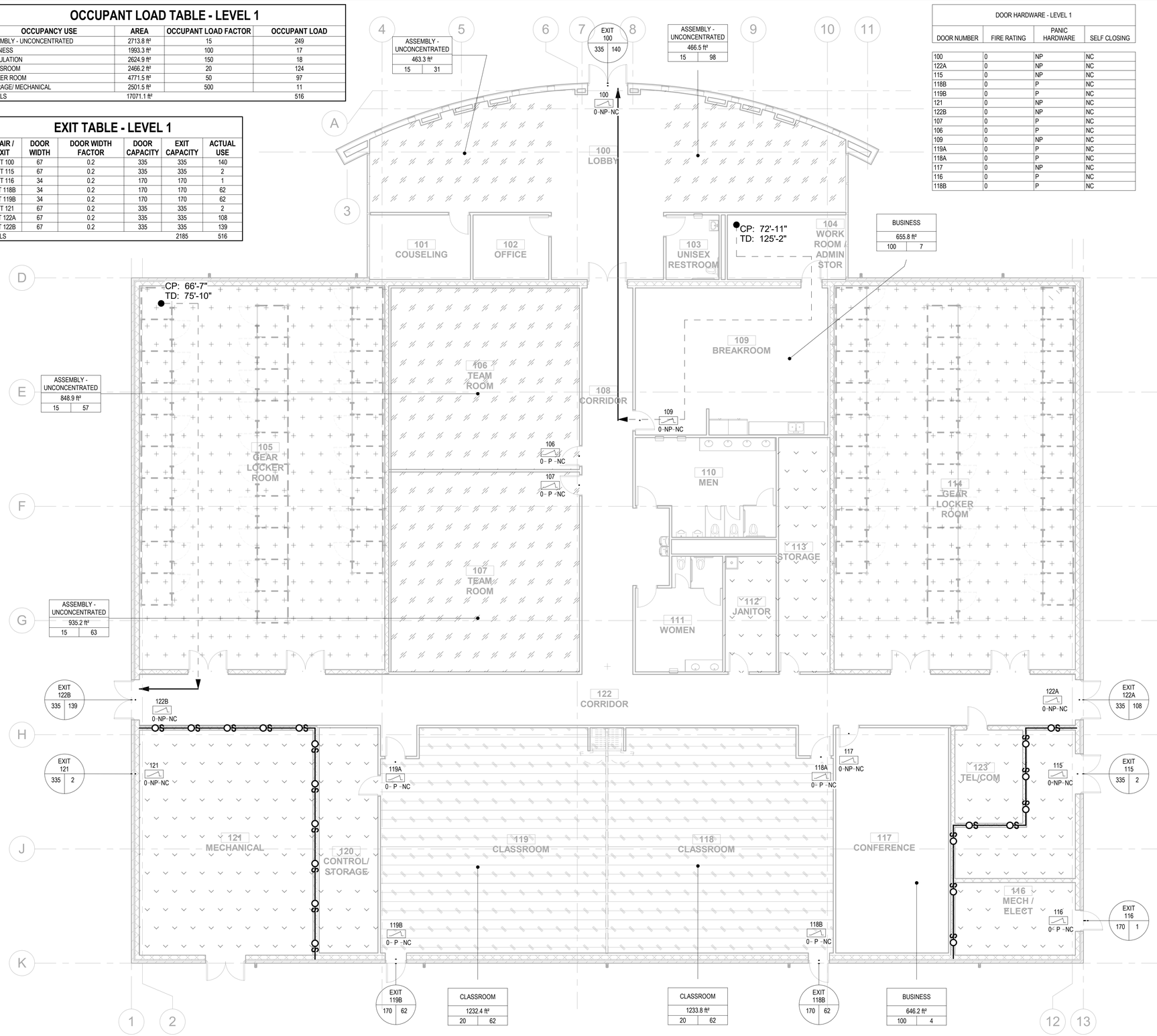

01 LIFE SAFETY PLAN
G-003 1/8" = 1'-0"

DOOR HARDWARE - LEVEL 1			
DOOR NUMBER	FIRE RATING	PANIC HARDWARE	SELF CLOSING
100	0	NP	NC
122A	0	NP	NC
115	0	NP	NC
118B	0	P	NC
119B	0	P	NC
121	0	NP	NC
122B	0	NP	NC
107	0	P	NC
106	0	P	NC
109	0	NP	NC
119A	0	P	NC
118A	0	P	NC
117	0	NP	NC
116	0	P	NC
118B	0	P	NC

IDENTIFIER	FUNCTION OF SPACE	OCCUPANT LOAD FACTOR
	ACCESSORY STORAGE AREAS, MECHANICAL EQUIPMENT ROOM	300 GROSS
	ASSEMBLY - UNCONCENTRATED	15 NET
	BUSINESS AREA	100 GROSS
	CLASSROOM AREA	20 NET
	LOCKER ROOMS	50 GROSS

* OCCUPANCY LOAD FACTORS ARE FROM TABLE 1004.1.2 OF THE IBC.

WALL TYPE LEGEND:

S — SMOKE PARTITION

EGRESS CAPACITY TAG LEGEND

— EXIT DESIGNATION; ACTUAL USE; EXIT CAPACITY

EGRESS CAPACITY TAG LEGEND

OCCUPANCY USE GROUP / #### / ### ### — OCCUPANCY USE GROUP; SPACE AREA; OCCUPANT LOAD; OCCUPANT LOAD FACTOR

TRAVEL DISTANCE LEGEND

DE XXXmm — DEAD END

CP XXXmm — COMMON PATH OF TRAVEL

TD XXXmm — TRAVEL DISTANCE

DOOR HARDWARE / WALL PENETRATION LEGEND

Door# / ### -## -## — ###=FIRE RATING IN MINUTES; ##=PANIC HARDWARE: P=YES, NP=NO; ##=SELF CLOSING: C=YES, NC=NO

- W - / A — A=FIRE RATING IN MINUTES; W=TYPE OF PENETRATION

FIRE EXTINGUISHER LEGEND

DRY CHEMICAL - ABC

DRY CHEMICAL - BC

MARK	DESCRIPTION	DATE

DESIGNED BY: K Lawrence
DRAWN BY: A Lockwood
CHECKED BY: E Babcock
SUBMITTED BY: HUTZEL ANS D

ISSUE DATE: JAN 06,2023
SOLICITATION NO.: 70CMSW22Q00000001
CONTRACT NO.: 70Z05018DKZFNPL08

US IMMIGRATION AND CUSTOMS ENFORCEMENT (ICE)
9485 DEERCROFT DRIVE
ORLANDO, FL 32837

KZF DESIGN
700 BROADWAY STREET
CINCINNATI, OH 45202

FT BENNING, GEORGIA
IMMIGRATION & CUSTOM'S ENFORCEMENT (ICE)

LIFE SAFETY PLAN

SHEET ID
MCB
G-003

JAN 06, 2023 - FINAL SUBMITTAL (35%)

NOT FOR CONSTRUCTION

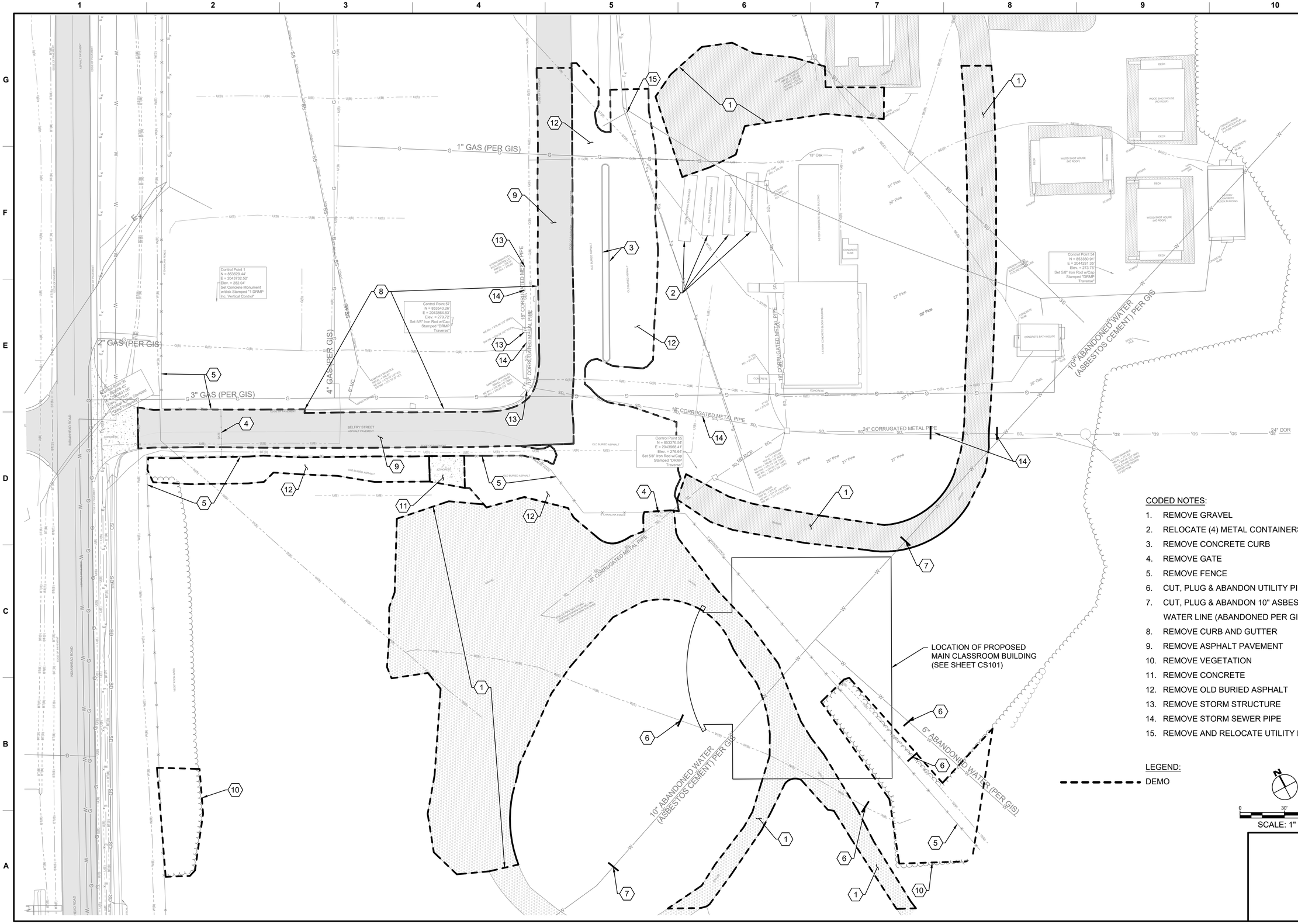

CODED NOTES:

1. REMOVE GRAVEL
2. RELOCATE (4) METAL CONTAINERS
3. REMOVE CONCRETE CURB
4. REMOVE GATE
5. REMOVE FENCE
6. CUT, PLUG & ABANDON UTILITY PIPE
7. CUT, PLUG & ABANDON 10" ASBESTOS WATER LINE (ABANDONED PER GIS)
8. REMOVE CURB AND GUTTER
9. REMOVE ASPHALT PAVEMENT
10. REMOVE VEGETATION
11. REMOVE CONCRETE
12. REMOVE OLD BURIED ASPHALT
13. REMOVE STORM STRUCTURE
14. REMOVE STORM SEWER PIPE
15. REMOVE AND RELOCATE UTILITY POLE

LEGEND:

DEMO

SCALE: 1" = 30'

MARK	DESCRIPTION	DATE

ISSUE DATE: 12/22/2022
SOLICITATION NO.: 70CMSW22Q00000001
CONTRACT NO.: 70Z05018DKZFNPL08

DESIGNED BY: PEF
DRAWN BY: PEF
CHECKED BY: GB
SUBMITTED BY: HUDZEL
SIZE: ANSI D

US IMMIGRATION AND CUSTOMS ENFORCEMENT (ICE)
9495 DELEGATED DRIVE
ORLANDO, FL 32837

KZF DESIGN
700 BROADWAY STREET
CINCINNATI, OH 45202

FT BENNING, GEORGIA
IMMIGRATION & CUSTOMS ENFORCEMENT (ICE)

SITE DEMOLITION PLAN

SHEET ID
MCB
CD101

JAN 6, 2023 - FINAL SUBMITTAL (35%)

File Path:
Plot Date:

NOT FOR CONSTRUCTION

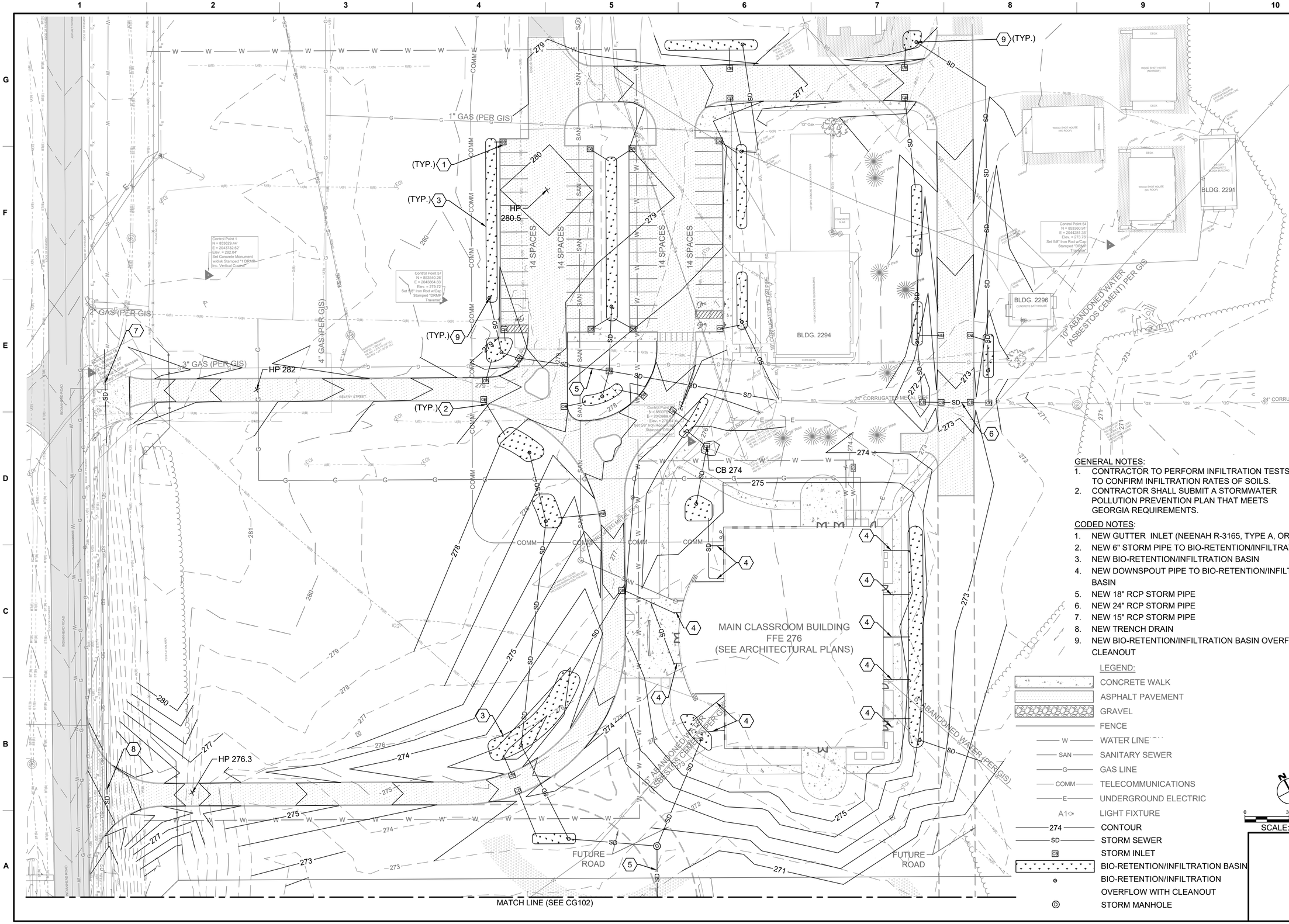

GENERAL NOTES:

1. CONTRACTOR TO PERFORM INFILTRATION TESTS TO CONFIRM INFILTRATION RATES OF SOILS.
2. CONTRACTOR SHALL SUBMIT A STORMWATER POLLUTION PREVENTION PLAN THAT MEETS GEORGIA REQUIREMENTS.

CODED NOTES:

1. NEW GUTTER INLET (NEENAH R-3165, TYPE A, OR EQUAL)
2. NEW 6" STORM PIPE TO BIO-RETENTION/INFILTRATION BASIN
3. NEW BIO-RETENTION/INFILTRATION BASIN
4. NEW DOWNSPOUT PIPE TO BIO-RETENTION/INFILTRATION BASIN
5. NEW 18" RCP STORM PIPE
6. NEW 24" RCP STORM PIPE
7. NEW 15" RCP STORM PIPE
8. NEW TRENCH DRAIN
9. NEW BIO-RETENTION/INFILTRATION BASIN OVERFLOW WITH CLEANOUT

LEGEND:

- CONCRETE WALK
- ASPHALT PAVEMENT
- GRAVEL
- FENCE
- W — WATER LINE
- SAN — SANITARY SEWER
- G — GAS LINE
- COMM — TELECOMMUNICATIONS
- E — UNDERGROUND ELECTRIC
- A1 — LIGHT FIXTURE
- 274 — CONTOUR
- SD — STORM SEWER
- CB — STORM INLET
- BIO-RETENTION/INFILTRATION BASIN
- BIO-RETENTION/INFILTRATION OVERFLOW WITH CLEANOUT
- D — STORM MANHOLE

SCALE: 1" = 30'

MARK	DESCRIPTION	DATE

DESIGNED BY: GB
DRAWN BY: PEF
CHECKED BY: GB
SUBMITTED BY: HUTZEL
SIZE: ANSI D
ISSUE DATE: 12/22/2022
SOLICITATION NO.: 70CMSW22Q00000001
CONTRACT NO.: 70Z05018DKZFNPL08

US IMMIGRATION AND CUSTOMS ENFORCEMENT (ICE)
9495 DELEGATED DRIVE
ORLANDO, FL 32837

KZF DESIGN
700 BROADWAY STREET
CINCINNATI, OH 45202

FT BENNING, GEORGIA
IMMIGRATION & CUSTOMS ENFORCEMENT (ICE)

SITE GRADING PLAN

SHEET ID
MCB
CG101

JAN 6, 2023 - FINAL SUBMITTAL (35%)

File Path:
Plot Date:

NOT FOR CONSTRUCTION

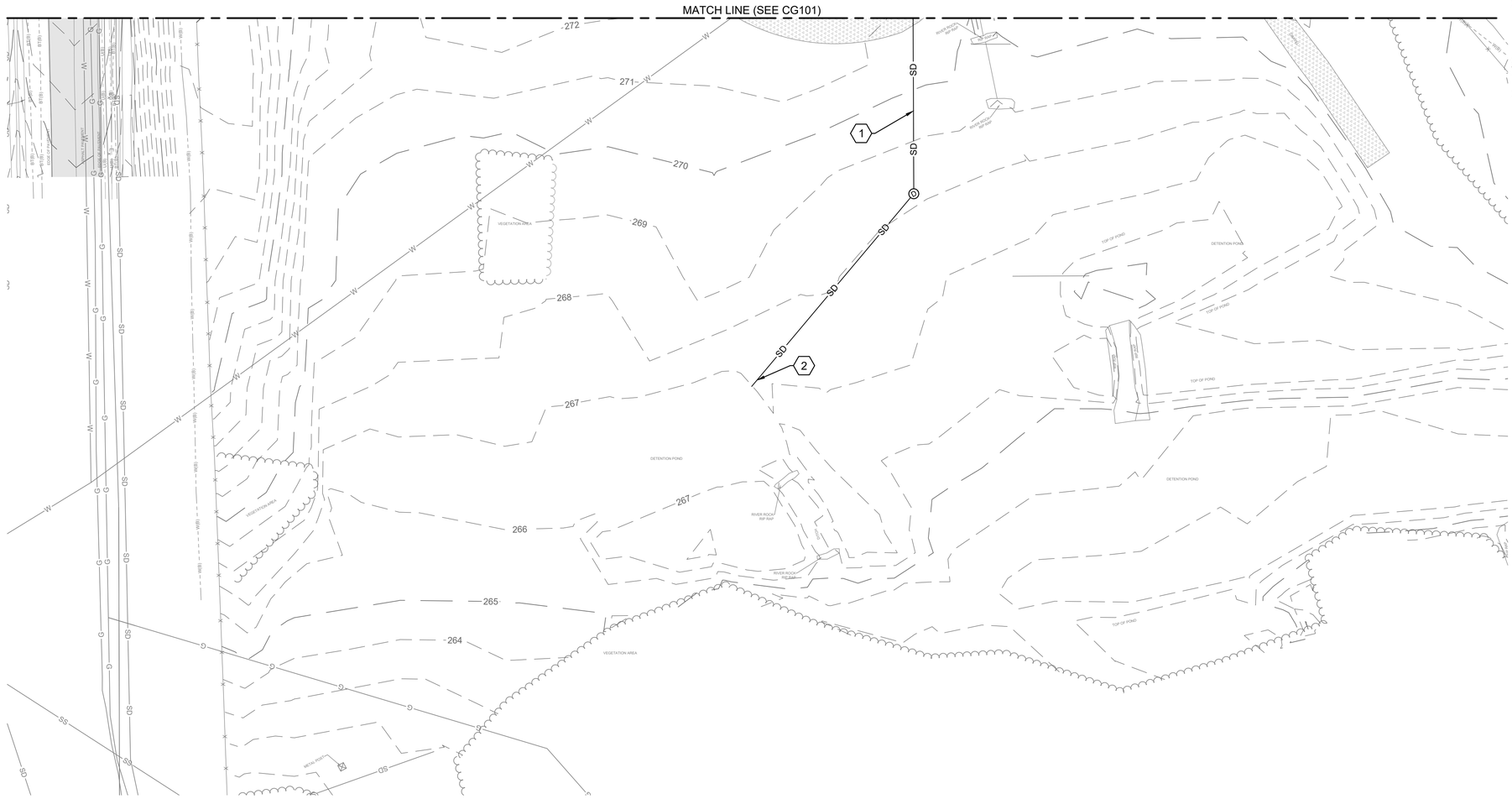

GENERAL NOTES:

1. CONTRACTOR TO PERFORM INFILTRATION TESTS TO CONFIRM INFILTRATION RATES OF SOILS.
2. CONTRACTOR SHALL SUBMIT A STORMWATER POLLUTION PREVENTION PLAN THAT MEETS GEORGIA REQUIREMENTS.

CODED NOTES:

1. NEW 18" RCP STORM PIPE
2. OUTLET STORM PIPE TO EXISTING DETENTION POND

LEGEND:

- CONCRETE WALK
- ASPHALT PAVEMENT
- GRAVEL
- W — WATER LINE
- SAN — SANITARY SEWER
- G — GAS LINE
- COMM — TELECOMMUNICATIONS
- E — UNDERGROUND ELECTRIC
- A1 — LIGHT FIXTURE
- 274 — CONTOUR
- SD — STORM SEWER
- CB — STORM INLET
- BIO-RETENTION/INFILTRATION BASIN
- BIO-RETENTION/INFILTRATION OVERFLOW WITH CLEANOUT
- D — STORM MANHOLE

N

0 30' 60'

SCALE: 1" = 30'

MARK	DESCRIPTION	DATE

DESIGNED BY: GB
DRAWN BY: PEF
CHECKED BY: GB
SUBMITTED BY: HUTZEL
SIZE: ANSI D
ISSUE DATE: 12/22/2022
SOLICITATION NO.: 70CMSW22Q00000001
CONTRACT NO.: 70205018DKZFNPL08

US IMMIGRATION AND CUSTOMS ENFORCEMENT (ICE)
9495 DELEGATED DRIVE
ORLANDO, FL 32837

KZF DESIGN
700 BROADWAY STREET
CINCINNATI, OH 45202

FT BENNING, GEORGIA
IMMIGRATION & CUSTOMS ENFORCEMENT (ICE)

SITE GRADING PLAN

SHEET ID
MCB
CG102

JAN 6, 2023 - FINAL SUBMITTAL (35%)

File Path:
Plot Date:

NOT FOR CONSTRUCTION

SEE APPENDIX D FOR REVISIONS

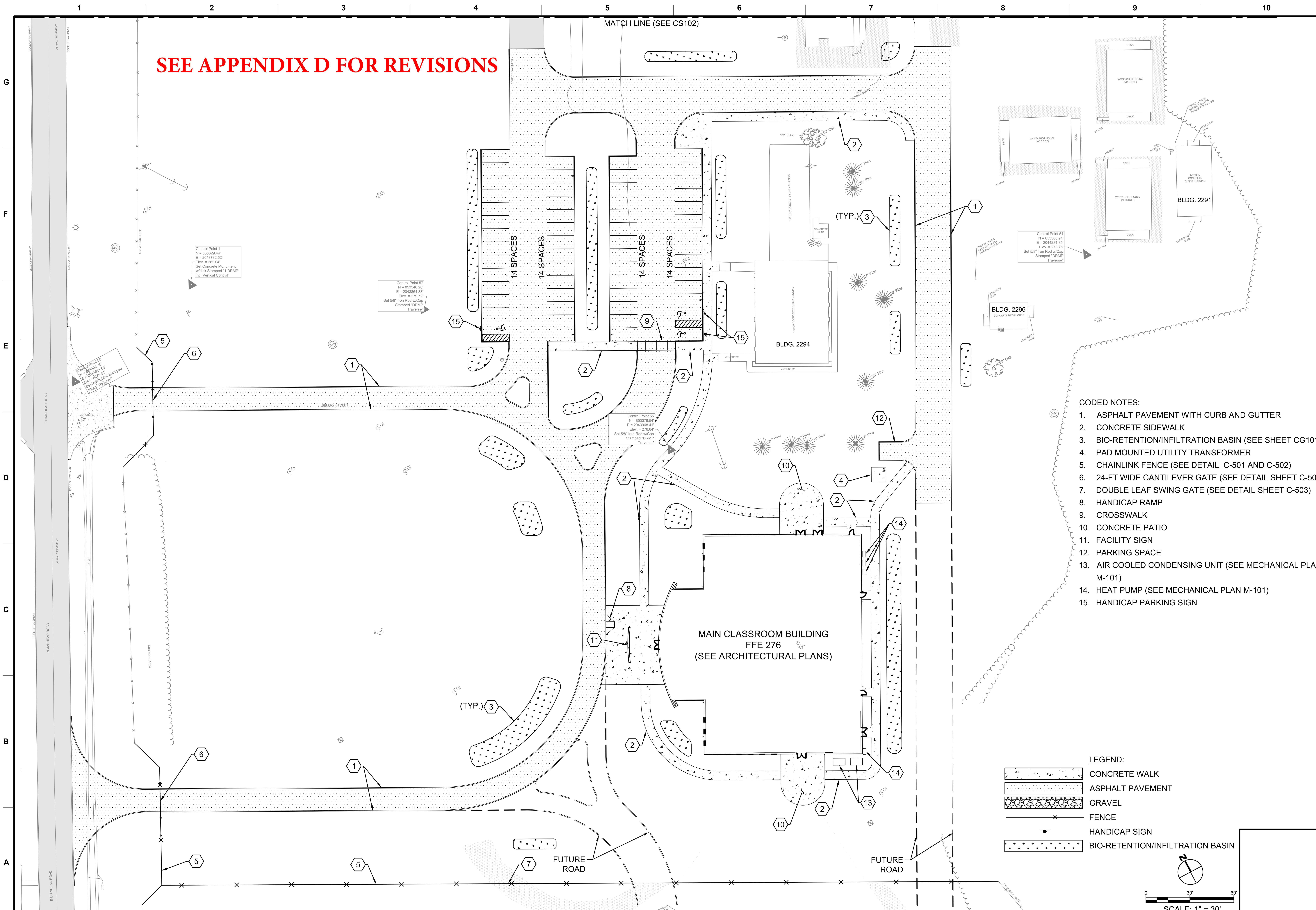

CODED NOTES:

1. ASPHALT PAVEMENT WITH CURB AND GUTTER
2. CONCRETE SIDEWALK
3. BIO-RETENTION/INFILTRATION BASIN (SEE SHEET CG101)
4. PAD MOUNTED UTILITY TRANSFORMER
5. CHAINLINK FENCE (SEE DETAIL C-501 AND C-502)
6. 24-FT WIDE CANTILEVER GATE (SEE DETAIL SHEET C-504)
7. DOUBLE LEAF SWING GATE (SEE DETAIL SHEET C-503)
8. HANDICAP RAMP
9. CROSSWALK
10. CONCRETE PATIO
11. FACILITY SIGN
12. PARKING SPACE
13. AIR COOLED CONDENSING UNIT (SEE MECHANICAL PLAN M-101)
14. HEAT PUMP (SEE MECHANICAL PLAN M-101)
15. HANDICAP PARKING SIGN

LEGEND:

- CONCRETE WALK
- ASPHALT PAVEMENT
- GRAVEL
- FENCE
- HANDICAP SIGN
- BIO-RETENTION/INFILTRATION BASIN

MARK	DESCRIPTION	DATE

ISSUE DATE: 12/22/2022
SOLICITATION NO.: 70CMSW22Q00000001
CONTRACT NO.: 70Z05018DKZFNPL08
DESIGNED BY: PEF
DRAWN BY: PEF
CHECKED BY: GB
SUBMITTED BY: HUTZEL
SIZE: ANSI D

US IMMIGRATION AND CUSTOMS ENFORCEMENT (ICE)
9495 DELEGATED DRIVE
ORLANDO, FL 32837

KZF DESIGN
700 BROADWAY STREET
CINCINNATI, OH 45202

FT BENNING, GEORGIA
IMMIGRATION & CUSTOMS ENFORCEMENT (ICE)

SITE PLAN

SHEET ID
MCB
CS101

JAN 6, 2023 - FINAL SUBMITTAL (35%)

File Path:
Plot Date:

NOT FOR CONSTRUCTION

CODED NOTES:

1. DUMPSTER PAD & ENCLOSURE
2. CONCRETE PAVEMENT (8" THICK REINFORCED)
3. GRAVEL PAVEMENT

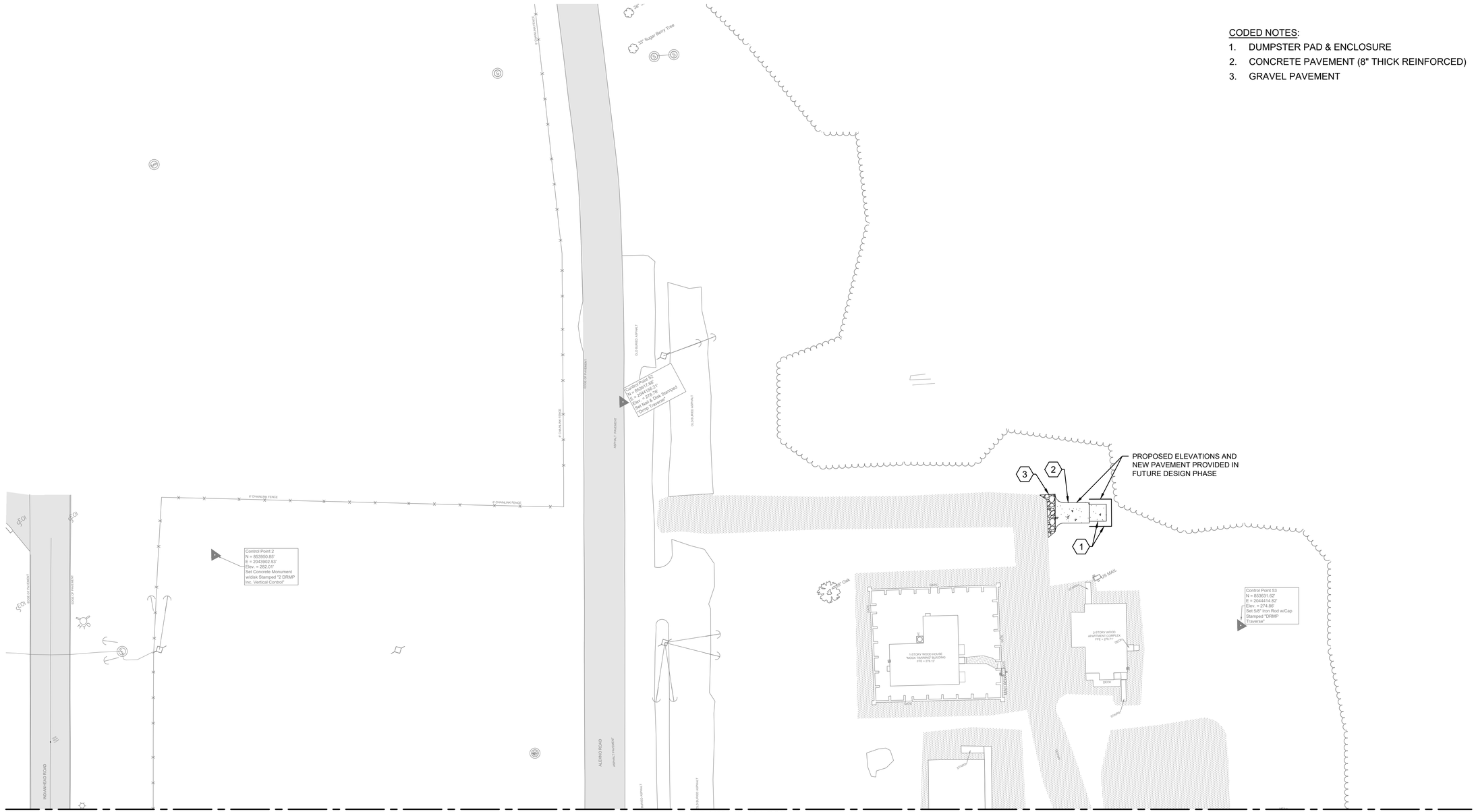

LEGEND:

- CONCRETE WALK
- ASPHALT PAVEMENT
- GRAVEL
- FENCE
- BIO-RETENTION/INFILTRATION BASIN

SCALE: 1" = 30'

MARK	DESCRIPTION	DATE

US IMMIGRATION AND CUSTOMS ENFORCEMENT (ICE)
9495 DELEGATED DRIVE
ORLANDO, FL 32837

KZF DESIGN
700 BROADWAY STREET
CINCINNATI, OH 45202

DESIGNED BY: PEF
DRAWN BY: PEF
CHECKED BY: GB
SUBMITTED BY: HUTZEL
SIZE: ANSI D
ISSUE DATE: 12/22/2022
SOLICITATION NO.: 70CMSW22Q00000001
CONTRACT NO.: 70Z05018DKZFNPL08

FT BENNING, GEORGIA
IMMIGRATION & CUSTOMS ENFORCEMENT (ICE)

SITE PLAN

SHEET ID
MCB
CS102

JAN 6, 2023 - FINAL SUBMITTAL (35%)

File Path:
Plot Date:

NOT FOR CONSTRUCTION

MATCH LINE (SEE CU102)

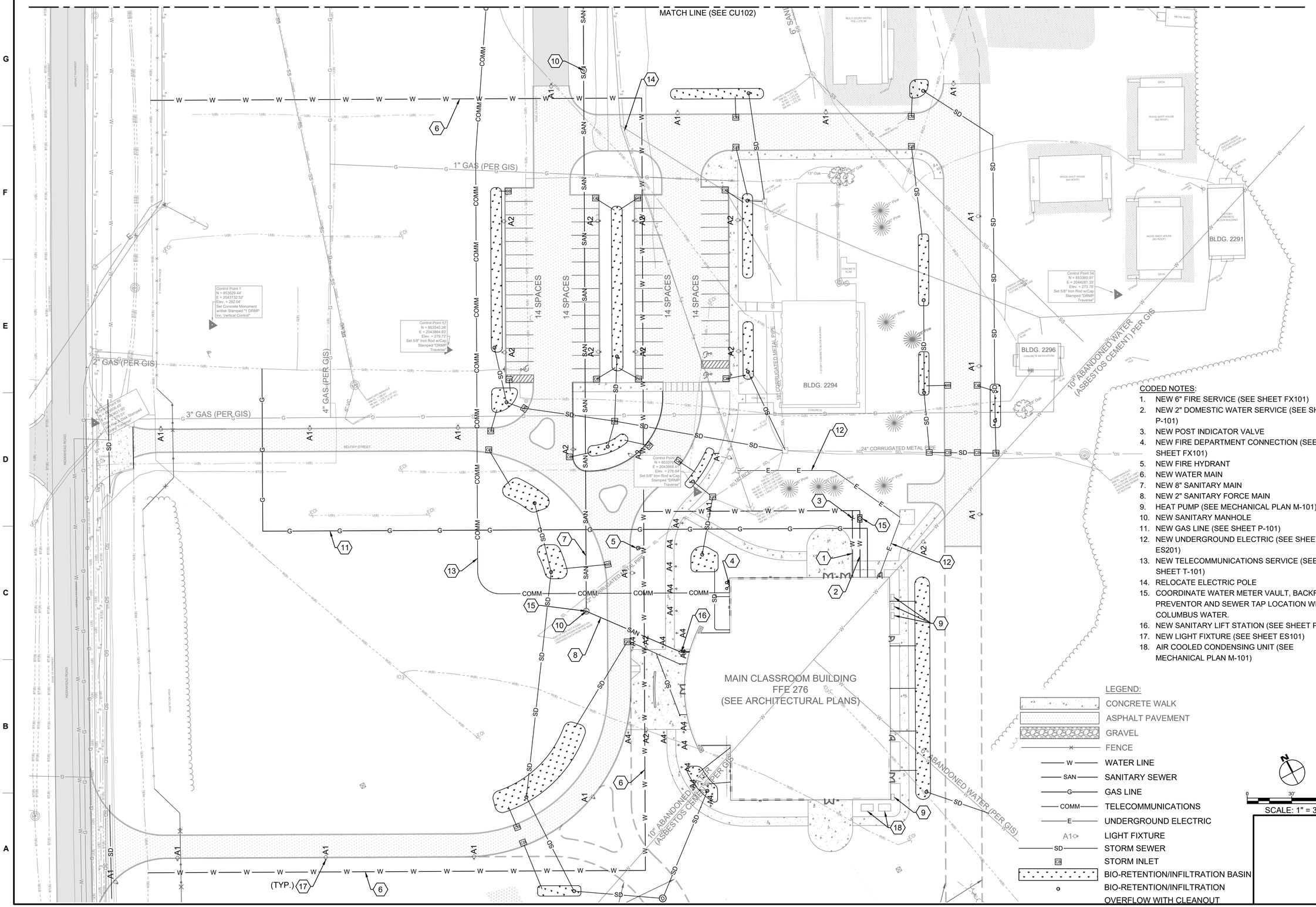

CODED NOTES:

1. NEW 6" FIRE SERVICE (SEE SHEET FX101)
2. NEW 2" DOMESTIC WATER SERVICE (SEE SHEET P-101)
3. NEW POST INDICATOR VALVE
4. NEW FIRE DEPARTMENT CONNECTION (SEE SHEET FX101)
5. NEW FIRE HYDRANT
6. NEW WATER MAIN
7. NEW 8" SANITARY MAIN
8. NEW 2" SANITARY FORCE MAIN
9. HEAT PUMP (SEE MECHANICAL PLAN M-101)
10. NEW SANITARY MANHOLE
11. NEW GAS LINE (SEE SHEET P-101)
12. NEW UNDERGROUND ELECTRIC (SEE SHEET ES201)
13. NEW TELECOMMUNICATIONS SERVICE (SEE SHEET T-101)
14. RELOCATE ELECTRIC POLE
15. COORDINATE WATER METER VAULT, BACKFLOW PREVENTOR AND SEWER TAP LOCATION WITH COLUMBUS WATER.
16. NEW SANITARY LIFT STATION (SEE SHEET P-101)
17. NEW LIGHT FIXTURE (SEE SHEET ES101)
18. AIR COOLED CONDENSING UNIT (SEE MECHANICAL PLAN M-101)

LEGEND:

- CONCRETE WALK
- ASPHALT PAVEMENT
- GRAVEL
- FENCE
- W — WATER LINE
- SAN — SANITARY SEWER
- G — GAS LINE
- COMM — TELECOMMUNICATIONS
- E — UNDERGROUND ELECTRIC
- A1 — LIGHT FIXTURE
- SD — STORM SEWER
- CB — STORM INLET
- BIO-RETENTION/INFILTRATION BASIN
- BIO-RETENTION/INFILTRATION OVERFLOW WITH CLEANOUT

MARK	DESCRIPTION	DATE

DESIGNED BY:	PEF
DRAWN BY:	PEF
CHECKED BY:	GB
SUBMITTED BY:	HUDZEL
SIZE:	ANSI D
ISSUE DATE:	12/22/2022
SOLICITATION NO.:	70CMSW22Q00000001
CONTRACT NO.:	70Z05018DKZFNPL08

US IMMIGRATION AND CUSTOMS ENFORCEMENT (ICE)
9495 DELEGATED DRIVE
ORLANDO, FL 32837

KZF DESIGN
700 BROADWAY STREET
CINCINNATI, OH 45202

FT BENNING, GEORGIA
IMMIGRATION & CUSTOMS ENFORCEMENT (ICE)

SITE UTILITY PLAN

SHEET ID
MCB
CU101

JAN 6, 2023 - FINAL SUBMITTAL (35%)

File Path:
Plot Date:

NOT FOR CONSTRUCTION

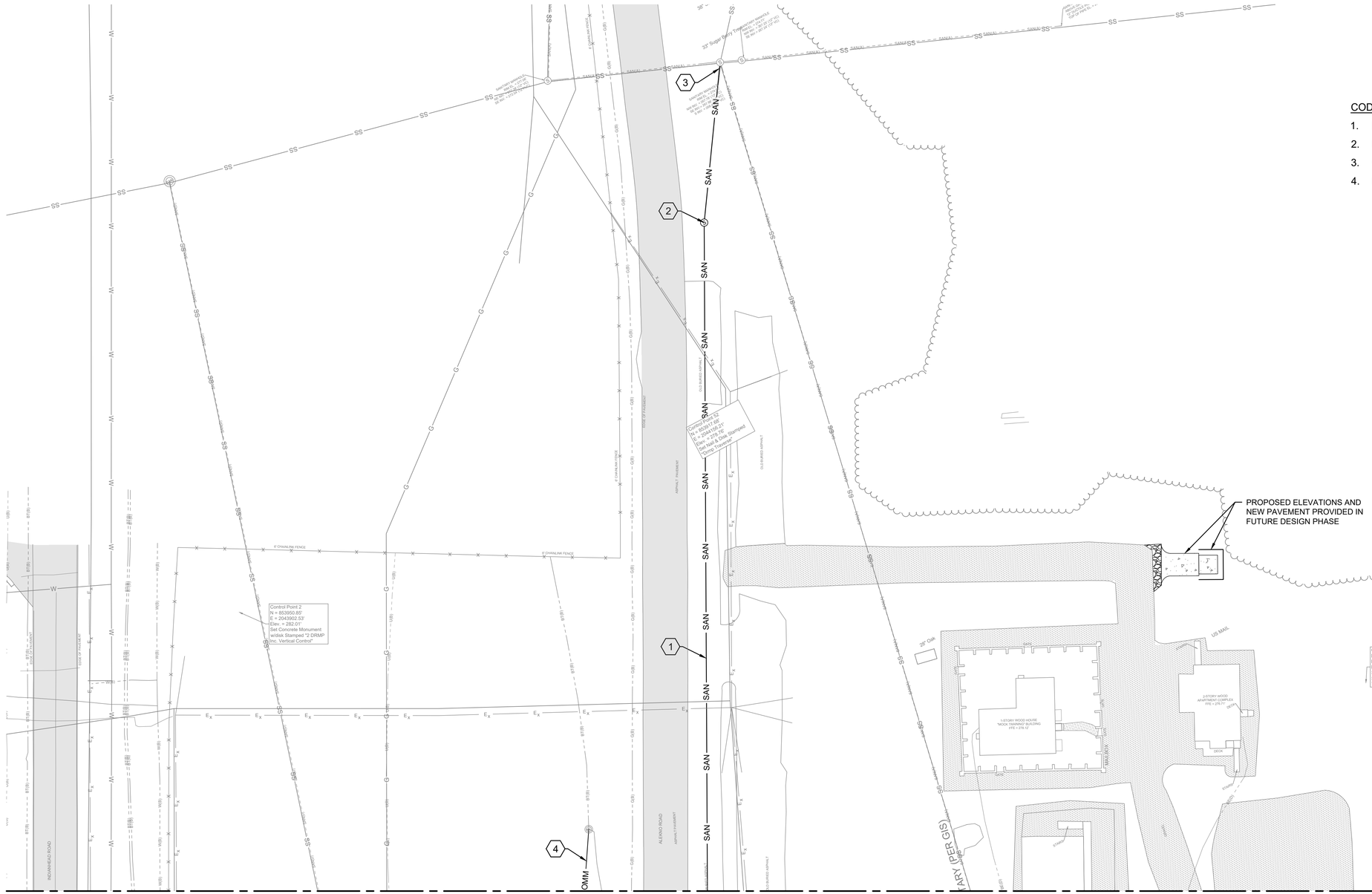

CODED NOTES:

1. NEW 8" SANITARY MAIN
2. NEW SANITARY MANHOLE
3. CONNECT TO EXISTING SANITARY MANHOLE
4. NEW TELECOMMUNICATIONS SERVICE

LEGEND:

- CONCRETE WALK
- ASPHALT PAVEMENT
- GRAVEL
- FENCE
- HANDICAP SIGN
- W — WATER LINE
- SAN — SANITARY SEWER
- G — GAS LINE
- COMM — TELECOMMUNICATIONS
- E — UNDERGROUND ELECTRIC
- A1 — LIGHT FIXTURE

0 30' 60'
SCALE: 1" = 30'

MARK	DESCRIPTION	DATE

DESIGNED BY: PEF
DRAWN BY: PEF
CHECKED BY: GB
SUBMITTED BY: HUTZEL
SIZE: ANSI D
ISSUE DATE: 12/22/2022
SOLICITATION NO.: 70CMSW22Q00000001
CONTRACT NO.: 70Z05018DKZFNPL08

US IMMIGRATION AND CUSTOMS ENFORCEMENT (ICE)
9495 DELEGATED DRIVE
ORLANDO, FL 32837

KZF DESIGN
700 BROADWAY STREET
CINCINNATI, OH 45202

FT BENNING, GEORGIA
IMMIGRATION & CUSTOMS ENFORCEMENT (ICE)

SITE UTILITY PLAN

SHEET ID
MCB
CU102

JAN 6, 2023 - FINAL SUBMITTAL (35%)

File Path:
Plot Date:

NOT FOR CONSTRUCTION

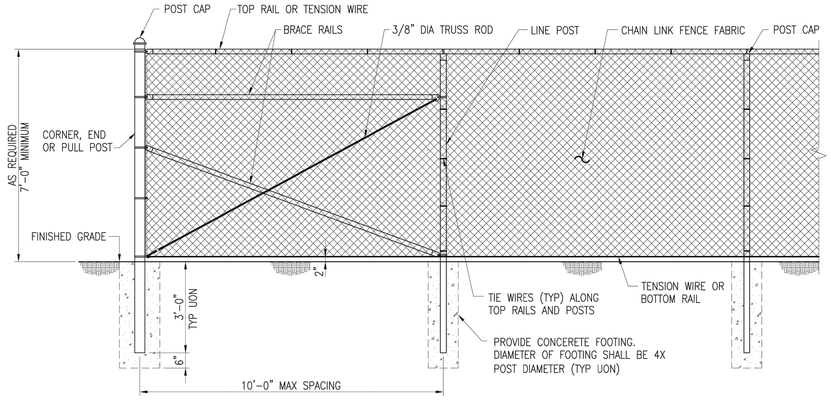

TYPICAL FENCE AND CORNER PANEL ELEVATION

SCALE: 1" = 1'-0"

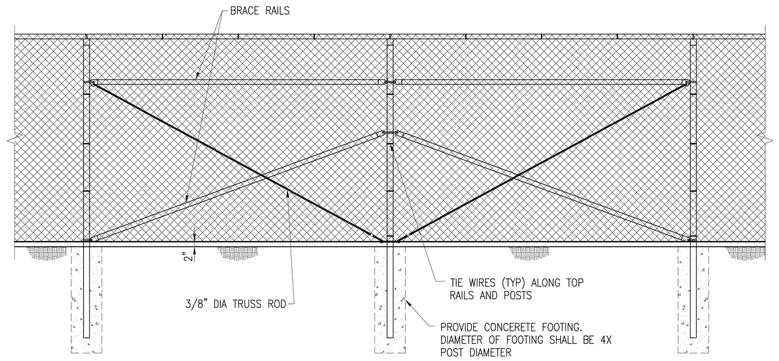

TYPICAL FENCE AND BRACED PANEL ELEVATION

SCALE: 1" = 1'-0"

NOTE (1): A BOTTOM RAIL CAN BE ADDED FOR SECURITY, IT SHALL BE INSTALLED APPROX 3" ABOVE GRADE (A MINIMUM OF 2" AND A MAXIMUM OF 4"). HARDWARE SHALL BE WELDED OR SHOT NAILED TO POSTS AND RAILS IN ORDER TO SECURE IN PLACE. ATTACH FABRIC TO NEW BOTTOM RAIL TO ELIMINATE POSSIBILITY OF PEELING UP FABRIC.

NOTE (2): SOME LOCATIONS MAY REQUIRE 8' OF FABRIC.

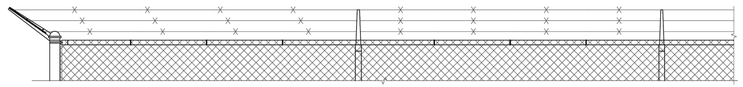

TYPICAL 3 STRAND BARBED WIRE AND SINGLE EXTENSION ARM CONFIGURATION

SCALE: 1" = 1'-0"

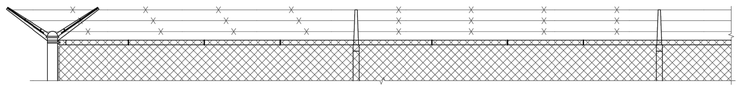

TYPICAL 6 STRAND BARBED WIRE AND DOUBLE EXTENSION ARM CONFIGURATION

SCALE: 1" = 1'-0"

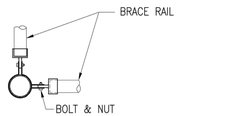

PLAN

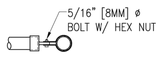

PLAN – ROUND POST

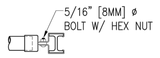

PLAN – "H" POST

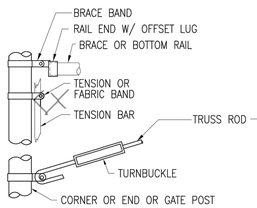

ELEVATION

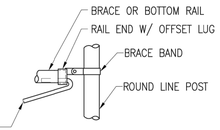

ELEVATION – ROUND POST

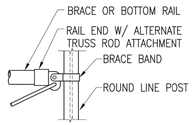

ELEVATION – "H" POST

LINE POST DETAILS

SCALE: 1 1/2" = 1'-0"

CORNER OR END POSTS

SCALE: 1 1/2" = 1'-0"

T & B SELVAGE
TWIST

PLAN – ROUND POST

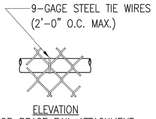

ELEVATION
TOP OR BRACE RAIL ATTACHMENT

PLAN – "H" POST

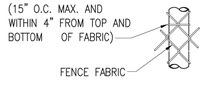

ELEVATION – ROUND POST

FITTINGS NOTES
1. METRIC DIMENSIONS ARE NOMINAL EQUIVALENTS TO U.S. DIMENSIONS.
2. ALL FITTINGS MATERIAL SHALL BE AS SPECIFIED.

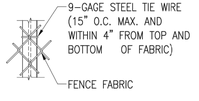

ELEVATION – "H" POST

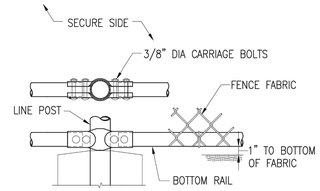

BOTTOM RAIL OPTION

GRAPHIC SCALES

1" = 1'-0" — 0 6" 1' 2'

1 1/2" = 1'-0" — 0 4" 8" 1'-4"

UFC-700

DRAWFORM REVISION: 24 AUGUST 2007

UNIFIED FACILITIES CRITERIA 4-022-03 SECURITY ENGINEERING: FENCES, GATES AND GUARD FACILITIES DEFINITIVE DRAWINGS FOR SECURITY FENCING, GATES AND CABLING

CHAIN LINK FENCE AND DETAILS

MARK	DESCRIPTION	DATE

DESIGNED BY: PEF
DRAWN BY: PEF
CHECKED BY: GB
SUBMITTED BY: HUTZEL
SIZE: ANSI D
ISSUE DATE: 12/22/2022
SOLICITATION NO.: 70CMSW22Q00000001
CONTRACT NO.: 70Z05018DMZFNPL08

US IMMIGRATION AND CUSTOMS ENFORCEMENT (ICE)
HSI PROPERTY MGMT UNIT
9495 DELEGATED DRIVE
ORLANDO, FL 32837

KZF DESIGN
700 BROADWAY STREET
CINCINNATI, OH 45202

FT BENNING, GEORGIA
IMMIGRATION & CUSTOMS ENFORCEMENT (ICE)

DETAILS

SHEET ID
MCB
C-501

JAN 6, 2023 - FINAL SUBMITTAL (35%)

NOT FOR CONSTRUCTION

File Path:
Plot Date:

FILE NAME: J:\DOCS\FENCE DRAWINGS\550205-UFC-700.dwg LAYOUT NAME: 5-700 PLOTTED: Monday, April 29, 2013 - 1:03pm

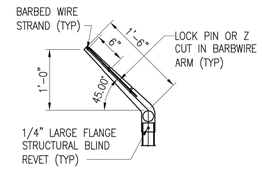

LINE POST

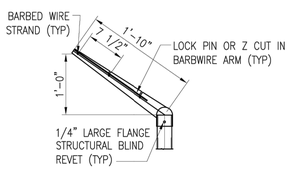

CORNER POST

SINGLE EXTENSION ARM DETAILS

SCALE: 1" = 1'-0"

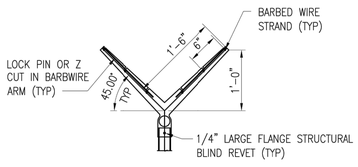

LINE POST

DOUBLE EXTENSION ARM DETAILS

SCALE: 1" = 1'-0"

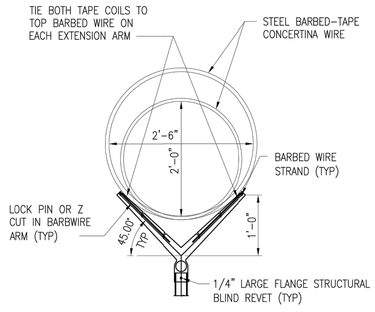

CONCERTNA WIRE MOUNTING

SCALE: 1" = 1'-0"

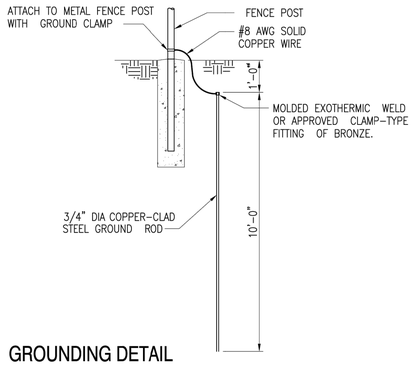

GROUNDING DETAIL

NO SCALE

CHAIN LINK FENCING NOTES

1. FABRIC: THE STANDARD FENCE FABRIC SHALL BE VINYL, ZINC OR ALUMINUM-COATED STEEL WIRE CHAIN LINK WITH MESH OPENINGS NOT LARGER THAN TWO INCHES PER SIDE AND A TWISTED AND BARBED SELVAGE AT TOP AND BOTTOM IN ACCORDANCE WITH THE SPECIFICATIONS. UTILIZE 6-GAUGE FOR BASE PERIMETER OR HEIGHTENED SECURITY ZONES AND 9-GAUGE FOR BASE INTERIOR OR WHEN JOINING AN EXISTING FENCE WHICH IS ALREADY 9-GAUGE.
2. FABRIC TIES: ONLY 12-GAUGE STEEL TIES SHALL BE USED. COATING OR PLATING WILL BE ELECTROLYTICALLY COMPATIBLE WITH THE FENCE FABRIC TO INHIBIT CORROSION.
3. REINFORCEMENT: TENSION WIRES SHALL BE INSTALLED AND INTERWOVEN (OR AFFIXED WITH FABRIC TIES) ALONG THE TOP & BOTTOM OF THE FENCE FOR STABILIZATION OF THE FENCE FABRIC.
4. FENCE HEIGHT: CHAIN LINK FABRIC SHALL BE 7' HIGH WITH AN ADDITIONAL 1' IN HEIGHT COMPOSED OF 3 STRANDS OF BARBED WIRE AS REQUIRED. THE TOTAL FENCE HEIGHT SHALL BE 8'.
5. GROUND CLEARANCE: BOTTOM OF THE FENCE FABRIC SHALL BE WITHIN TWO INCHES OF FIRM SOIL.
6. TOP GUARDS: A TOP GUARD IS AN OVERHANG OF BARBED WIRED ALONG THE TOP OF A FENCE, FACING OUTWARD (AWAY FROM PROTECTED SITE) AND UPWARD AT APPROX. 45 ANGLE. TOP GUARD SUPPORTING ARMS WILL BE PERMANENTLY AFFIXED TO THE TOP OF FENCE POSTS TO INCREASE THE OVERALL HEIGHT OF THE FENCE AT LEAST 1 FOOT. THREE STRANDS OF 12-GAUGE BARBED WIRE, EQUALLY SPACED, SHALL BE INSTALLED ON THE SUPPORTING ARMS.
7. FENCE POSTS: SHALL BE ASTM F1043 OR F1083 ROUND PIPE OR SQUARE TUBE AND SHALL BE GALVANIZED IN ACCORDANCE WITH THE SPECIFICATIONS. FENCE POST SPACING AND SIZE (DIAMETER) SHALL BE DETERMINED IN ACCORDANCE WITH CHAIN LINK FENCE MANUFACTURERS' INSTITUTE (WLG 2445). SPACING SHALL NOT EXCEED 10'-0" OC. SIZE (DIAMETER) SHALL NOT BE LESS THAN THAT SPECIFIED.

UNIFIED FACILITIES CRITERIA 4-022-03 SECURITY ENGINEERING: FENCES, GATES AND GUARD FACILITIES
DEFINITIVE DRAWINGS FOR SECURITY FENCING, GATES AND CABLING

BARBED WIRE ARRANGEMENT DETAILS

GRAPHIC SCALES

1" = 1'-0" 0 6" 1' 2'

UFC-701

DRAWFORM REVISION: 24 AUGUST 2007

MARK	DESCRIPTION	DATE

ISSUE DATE: 12/22/2022
SOLICITATION NO.: 70CMSW22Q00000001
CONTRACT NO.: 70Z05018DKZFNPL08

DESIGNED BY: PEF
DRAWN BY: PEF
CHECKED BY: GB
SUBMITTED BY: HUZEL
SIZE: ANSI D

US IMMIGRATION AND CUSTOMS ENFORCEMENT (ICE)
9495 DELEGATED DRIVE
ORLANDO, FL 32837

KZF DESIGN
700 BROADWAY STREET
CINCINNATI, OH 45202

FT BENNING, GEORGIA
IMMIGRATION & CUSTOMS ENFORCEMENT (ICE)

DETAILS

SHEET ID
MCB
C-502

JAN 6, 2023 - FINAL SUBMITTAL (35%)

NOT FOR CONSTRUCTION

File Path:
Plot Date:

FILE NAME: J:\DOE\FENCE DRAWINGS\550205-UFC-701.dwg LAYOUT NAME: F-### PLOTTED: Monday, April 29, 2013 - 1:05pm

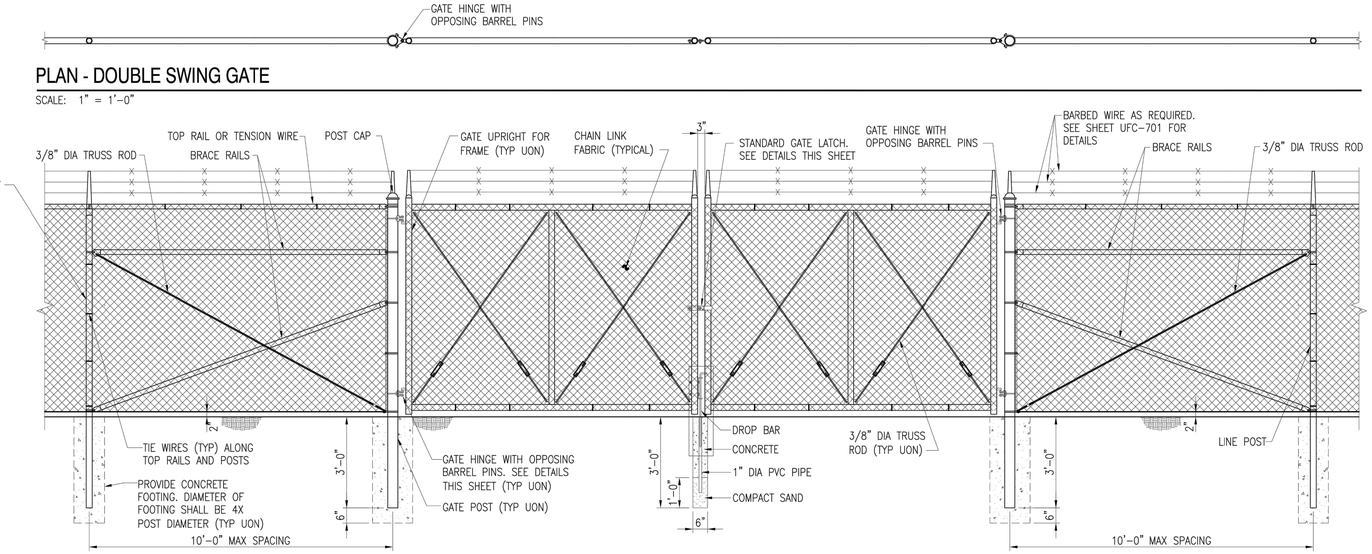

PLAN - DOUBLE SWING GATE

SCALE: 1" = 1'-0"

TYPICAL DOUBLE SWING GATE ELELVATION

SCALE: 1/2" = 1'-0"

NOTE: PROVIDE ONE DROP BAR FOR EACH LEAF (TYP). ASSOCIATED GALV SLEEVES TO BE INSTALLED FLUSH WILL GRADE AT FULLY OPEN AND CLOSED POSITIONS. CONTRACTOR SHALL PROVIDE 6" LAYER OF #10 STONE BELOW BOTTOM OF SLEEVE TO ALLOW FOR DRAINAGE.

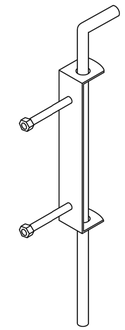

DETAIL: DROP BAR

NOT TO SCALE

PLAN SINGLE SWING GATE

SCALE: 1" = 1'-0"

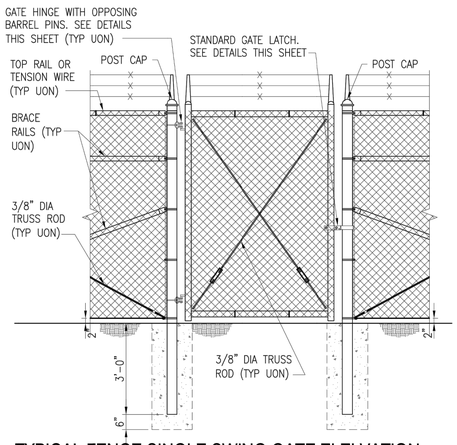

TYPICAL FENCE SINGLE SWING GATE ELELVATION

SCALE: 1/2" = 1'-0"

SINGLE OR DOUBLE LEAF GATES		
NOM HEIGHT (H)	UPRIGHT HT (U)	FRAME HT (F)
NOM HT INCLUDING BARBED WIRE.	ACTUAL DIM	ACTUAL DIM
8'-0" [2438MM]	7'-10" [2388MM]	6'-8 1/2" [2045MM]

SINGLE LEAF GATES		
OPENING	GATE POSTS	HINGE SPACE (S)
FACE TO FACE	SQUARE & ROUND SIZES	POST TO UPRIGHT
3'-0" [914MM] THROUGH 6'-0" [1829MM]	2.5"[63.5MM]SQ x 3/16"TH OR 2.875" [73MM] OD	FOR SQUARE & ROUND GATE POSTS: 2 1/4" [57MM]
6'-0" [1829MM] THROUGH 12'-0" [3657MM]	4" [102MM] SQ x 3/16"TH OR 4" [102MM] OD	FOR SQUARE & ROUND GATE POSTS: 2 1/4" [57MM]
12'-0" [3657MM] THROUGH 19'-0" [5790MM]	6" [153MM] SQ x 3/16"TH OR 6.625" [168MM] OD	FOR SQUARE & ROUND GATE POSTS: 2 1/4" [57MM]
19'-0" [5790MM] THROUGH 23'-0" [7010MM]	8" [203MM] SQ x 1/4"TH OR 8.625" [219MM] OD	FOR SQUARE & ROUND GATE POSTS: 2 1/4" [57MM]

GATE POSTS & FOUNDATIONS: GATE POST SIZE AND ASSOCIATED FOOTING DIAMETER TO BE DETERMINED BY MANUFACTURER, BASED ON LEAF WEIGHT & DIMENSION, BUT NOT LESS THAN DIAMETER SHOWN ON THESE DRAWINGS. MINIMUM FOOTING DIAMETERS (TO BE FILLED W/4000 PSI CONC): 40" ø FOR 8" POST; 36" ø FOR 6" POST; 24" ø FOR 4" POST; OTHER SIZES TO BE DESIGNED BY MFR OR KTR. NO FOOTING WIDTH SHALL BE LESS THAN 4(X) THE POST WIDTH.

NOTE: IF GATE HINGES ARE NOT OPPOSING (AS SHOWN ABOVE) OR LEAF IS NOT LOCKED MECHANICALLY TO THE HINGES, WELD AN ANGLE, PLATE, OR BLOCK ABOVE HINGE TO RESTRICT LEAF FROM BEING REMOVED OR LIFTED OFF. RESTRICTION SHALL NOT HINDER OPERATION OF GATE.

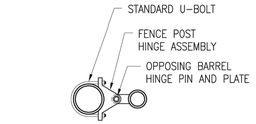

(*)NOTE: WELD HINGES TO POST IF INSTALLING CABLE REINFORCEMENT ON GATES. ENSURE CORRECT HEIGHT FOR FULL OPERATION PRIOR TO WELDING (TYPICAL)

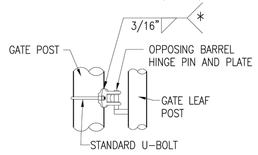

GATE HINGE DETAIL

SCALE: 1 1/2" = 1'-0"

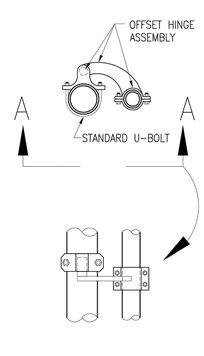

OFFSET HINGE DETAIL

SCALE: 1 1/2" = 1'-0"

GATE LATCH DETAIL

SCALE: 1 1/2" = 1'-0"

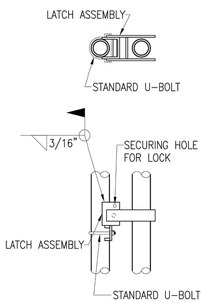

FULCRUM LATCH DETAIL

SCALE: 1 1/2" = 1'-0"

GRAPHIC SCALES

1/2" = 1'-0" — 0 1' 2' 4'

1 1/2" = 1'-0" — 0 4" 8" 1'-4"

UFC-702

DRAWFORM REVISION: 24 AUGUST 2007

FILE NAME: J:\DOCS\FENCE DRAWINGS\550209-UFC-702.dwg LAYOUT NAME: 5-702 PLOTTED: Monday, April 29, 2013 - 1:07pm

UNIFIED FACILITIES CRITERIA 4-022-03 SECURITY ENGINEERING: FENCES, GATES AND GUARD FACILITIES
DEFINITIVE DRAWINGS FOR SECURITY FENCING, GATES AND CABLING

CHAIN LINK SWING GATE AND DETAILS

MARK	DESCRIPTION	DATE

ISSUE DATE: 12/22/2022
SOLICITATION NO.: 70CMSW22QQ0000001
CONTRACT NO.: 70Z05018DKZFNPL08

US IMMIGRATION AND CUSTOMS ENFORCEMENT (ICE)
ERO FIELD OFFICE
9495 DELEGATED DRIVE
ORLANDO, FL 32837

KZF DESIGN
700 BROADWAY STREET
CINCINNATI, OH 45202

DESIGNED BY: PEF
DRAWN BY: PEF
CHECKED BY: GB
SUBMITTED BY: HUTZEL
SIZE: ANSI D

FT BENNING, GEORGIA
IMMIGRATION & CUSTOMS ENFORCEMENT (ICE)

DETAILS

SHEET ID
MCB
C-503

JAN 6, 2023 - FINAL SUBMITTAL (35%)

File Path:
Plot Date:

NOT FOR CONSTRUCTION

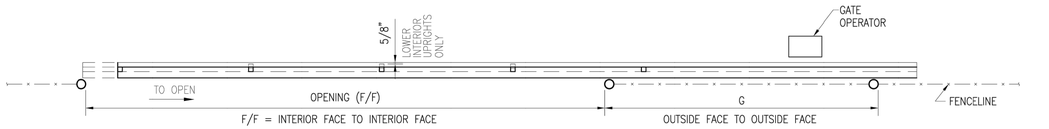

A1
UFC-703

GATE PLAN

NOT TO SCALE

C1
CIVIL DWGS | UFC-703

SAMPLING OF SIZES:

OPENING (F/F)	NOMINAL HEIGHT (H)	LENGTH (L)	GATE POSTS (G)	BAYS / OVERHANG
37'-0"	8'-0"	53'-3"	16'-0"	5 (FABRIC) / 2 (W/O)
30'-0"	8'-0"	42'-3"	12'-0"	4 (FABRIC) / 2 (W/O)
24'-0"	8'-0"	36'-3"	12'-0"	3 (FABRIC) / 2 (W/O)

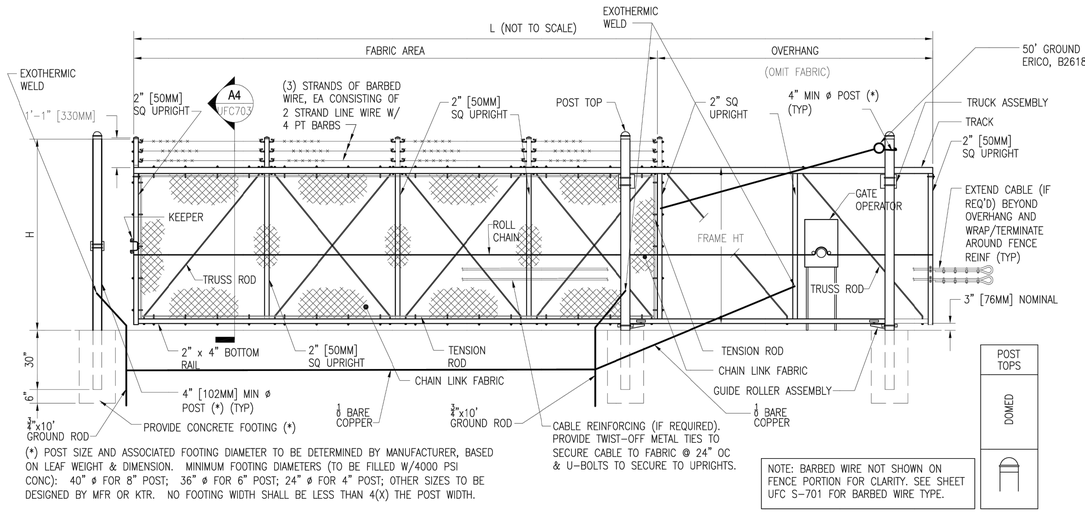

(*) POST SIZE AND ASSOCIATED FOOTING DIAMETER TO BE DETERMINED BY MANUFACTURER, BASED ON LEAF WEIGHT & DIMENSION. MINIMUM FOOTING DIAMETERS (TO BE FILLED W/4000 PSI CONC): 40" ø FOR 8" POST; 36" ø FOR 6" POST; 24" ø FOR 4" POST; OTHER SIZES TO BE DESIGNED BY MFR OR KTR. NO FOOTING WIDTH SHALL BE LESS THAN 4(X) THE POST WIDTH.

NOTE: BARBED WIRE NOT SHOWN ON FENCE PORTION FOR CLARITY. SEE SHEET UFC S-701 FOR BARBED WIRE TYPE.

TYPICAL SINGLE CANTILEVERED SLIDING GATE ELEVATION- (4) BAYS SHOWN

NOT TO SCALE

WITH ROUND POSTS & WITH BARBED WIRE

A1
UFC-703 | UFC-703

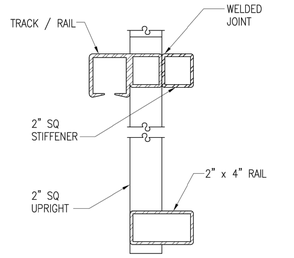

SECTION (TYP)

NOT TO SCALE

A4
UFC-703 | UFC-703

UNIFIED FACILITIES CRITERIA 4-022-03 SECURITY ENGINEERING: FENCES, GATES AND GUARD FACILITIES
DEFINITIVE DRAWINGS FOR SECURITY FENCING, GATES AND CABLING

CHAIN LINK CANTILEVERED GATE DETAILS

UFC-703

DRAWFORM REVISION: 24 AUGUST 2007

MARK	DESCRIPTION	DATE

ISSUE DATE: 12/22/2022
SOLICITATION NO.: 70CMSW22Q00000001
CONTRACT NO.: 70Z05018DKZFNPL08

DESIGNED BY: PEF
DRAWN BY: PEF
CHECKED BY: GB
SUBMITTED BY: HUDZEL
SIZE: ANSI D

US IMMIGRATION AND CUSTOMS ENFORCEMENT (ICE)
9465 DELEGATED DRIVE
ORLANDO, FL 32837

KZF DESIGN
700 BROADWAY STREET
CINCINNATI, OH 45202

FT BENNING, GEORGIA
IMMIGRATION & CUSTOMS ENFORCEMENT (ICE)

DETAILS

SHEET ID
MCB
C-504

JAN 6, 2023 - FINAL SUBMITTAL (35%)

NOT FOR CONSTRUCTION

File Path:
Plot Date:

FILE NAME: J:\DOCS\FENCE DRAWINGS\550205-UFC-703.dwg LAYOUT NAME: Layout1 PLOTTED: Monday, April 29, 2013 - 1:09pm

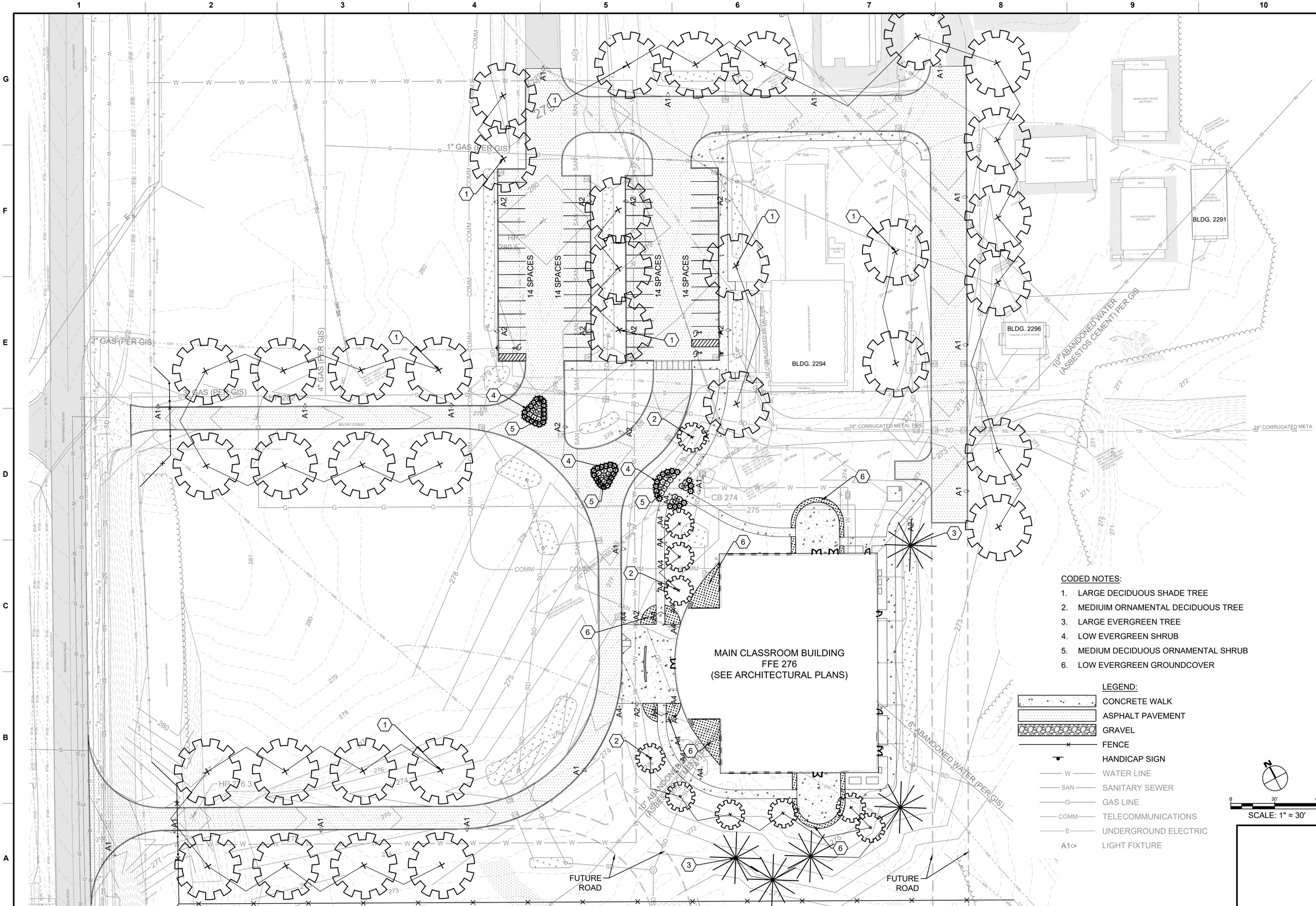

CODED NOTES:

1. LARGE DECIDUOUS SHADE TREE
2. MEDIUIM ORNAMENTAL DECIDUOUS TREE
3. LARGE EVERGREEN TREE
4. LOW EVERGREEN SHRUB
5. MEDIUM DECIDUOUS ORNAMENTAL SHRUB
6. LOW EVERGREEN GROUNDCOVER

LEGEND:

- CONCRETE WALK
- ASPHALT PAVEMENT
- GRAVEL
- FENCE
- HANDICAP SIGN
- W — WATER LINE
- SAN — SANITARY SEWER
- G — GAS LINE
- COMM — TELECOMMUNICATIONS
- E — UNDERGROUND ELECTRIC
- A1 — LIGHT FIXTURE

SCALE: 1" = 30'

MARK	DESCRIPTION	DATE

DESIGNED BY: SDS
DRAWN BY: SDS
CHECKED BY: PEF
SUBMITTED BY: HUTZEL
SIZE: ANSI D
ISSUE DATE: 12/22/2022
SOLICITATION NO.: 70CMSW22Q00000001
CONTRACT NO.: 70205018DKZFNPL08

US IMMIGRATION AND CUSTOMS ENFORCEMENT (ICE)
9495 DELEGATED DRIVE
ORLANDO, FL 32837

KZF DESIGN
700 BROADWAY STREET
CINCINNATI, OH 45202

FT BENNING, GEORGIA
IMMIGRATION & CUSTOMS ENFORCEMENT (ICE)

LANDSCAPE PLAN

SHEET ID
MCB
L-101

JAN 6, 2023 - FINAL SUBMITTAL (35%)

File Path:
Plot Date:

NOT FOR CONSTRUCTION

GENERAL NOTES

1. THE CONTRACTOR SHALL CONDUCT ALL OPERATIONS IN STRICT ACCORDANCE WITH THE SAFETY REQUIREMENTS IMPOSED BY THE OWNER AND OSHA. IT IS SOLELY THE CONTRACTOR'S RESPONSIBILITY TO FOLLOW ALL APPLICABLE SAFETY CODES AND REGULATIONS GOVERNING THIS WORK. THE CONTRACTOR SHALL REMOVE ALL DEBRIS FROM THE OWNER'S PROPERTY AND DISCARD ACCORDING TO LOCAL REGULATIONS.
2. THIS STRUCTURE IS DESIGNED TO BE SELF-SUPPORTING AND STABLE AFTER IT IS FULLY COMPLETED. HOWEVER, THE CONTRACTOR IS SOLELY RESPONSIBLE TO DETERMINE THE ERECTION PROCEDURES AND SEQUENCES REQUIRED TO ENSURE STABILITY OF THE STRUCTURE AND ITS COMPONENT PARTS DURING CONSTRUCTION. ANY TEMPORARY BRACING, CONNECTIONS, GUYS, OR TIE-DOWNS THAT MAY BE NECESSARY DURING ERECTION ARE NOT SHOWN ON STRUCTURAL DRAWINGS. IF APPLIED, THEY SHALL BE REMOVED AS CONDITIONS PERMIT, AND SHALL REMAIN THE PROPERTY OF THE CONTRACTOR. THIS CONSTRUCTION STABILITY REQUIREMENT APPLIES CONTINUOUSLY AND IS NOT LIMITED TO NORMAL WORKING HOURS.
3. ALL TEMPORARY SHORING DRAWINGS SHALL BE PREPARED AND STAMPED BY A LICENSED ENGINEER.
4. EXISTING UTILITIES AND ALL OTHER OBSTRUCTIONS TO WORK SHALL BE TEMPORARILY REMOVED AND RE-INSTALLED (INCLUDING NECESSARY MODIFICATIONS) BY THE CONTRACTOR AFTER COMPLETION OF NEW WORK.
5. DIMENSIONS PERTAINING TO EXISTING CONDITIONS SHALL BE FIELD VERIFIED BY THE CONTRACTOR PRIOR TO ANY FABRICATION, CONSTRUCTION, OR ERECTION.
6. ALL DETAILS, SECTIONS, AND NOTES PROVIDED ON STRUCTURAL DRAWINGS ARE INTENDED TO BE TYPICAL FOR SIMILAR SITUATIONS ELSEWHERE, UNLESS SPECIFICALLY NOTED OTHERWISE. FOR ANY DETAILS AND DIMENSIONS NOT PROVIDED, REFER TO ARCHITECTURAL DRAWINGS. ALL DIMENSIONS AND ELEVATIONS SHOWN ON STRUCTURAL DRAWINGS WERE INTENDED TO CONFORM WITH THE INFORMATION PROVIDED ON ARCHITECTURAL DRAWINGS. THE CONTRACTOR SHALL REPORT ANY DISCREPANCIES TO THE ARCHITECT OR STRUCTURAL ENGINEER FOR RESOLUTION BEFORE PROCEEDING WITH ANY ADDITIONAL WORK.
7. OPENING SIZES AND LOCATIONS SHOWN FOR PIPES, DUCTS, ETC. ARE SHOWN FOR GENERAL INFORMATION ONLY. REFER TO RELATED DRAWINGS (ARCH., MECH., ELECT, ETC.) FOR OTHER POSSIBLE EQUIPMENT SUPPORTS; WALL, FLOOR AND ROOF OPENINGS; SLEEVES; AND OTHER EMBEDDED ITEMS NOT SPECIFICALLY INDICATED ON STRUCTURAL DRAWINGS. COORDINATE ALL REQUIRED DIMENSIONS WITH APPLICABLE TRADE CONTRACTORS PRIOR TO ANY STEEL FABRICATION OR CONCRETE PLACEMENT. ANY OPENINGS REQUIRED TO BE LARGER THAN OPENINGS SHOWN SHALL BE VERIFIED PRIOR TO CONSTRUCTION.
8. ALL FRAMING MEMBERS PROVIDED FOR MECHANICAL TRADES, LINTELS, ROOF OPENINGS, ETC. ARE FOR BIDDING PURPOSES ONLY. THE CONTRACTOR SHALL SUBMIT MANUFACTURER'S DESIGN DATA FOR THE PROPOSED EQUIPMENT PRIOR TO STEEL SHOP DRAWING SUBMITTAL, SO STRUCTURAL ENGINEER CAN VERIFY AND REDESIGN THE SUPPORT FRAMING (IF NECESSARY) TO ACCOMMODATE THE ACTUAL CONDITION.
9. ALL SPECIAL INSPECTIONS REQUIRED BY THE BUILDING OFFICIAL SHALL BE CONDUCTED IN ACCORDANCE WITH THE APPLICABLE SECTIONS OF THE GOVERNING BUILDING CODE. REFER TO THE SPECIAL INSPECTION REQUIREMENTS ON SHEET S-004 & S-005.
10. REFER TO THE PROJECT SPECIFICATIONS FOR SHOP DRAWINGS AND SUBMITTAL REQUIREMENTS.
11. SHOP DRAWINGS AND SUBMITTALS PREPARED BY SUPPLIERS AND/OR SUBCONTRACTORS SHALL BE REVIEWED AND STAMPED BY THE GENERAL CONTRACTOR PRIOR TO SUBMISSION TO THE STRUCTURAL ENGINEER. ALL DEVIATIONS FROM THE CONTRACT DOCUMENTS SHALL BE CIRCLED AND NOTED ON THE SHOP DRAWINGS BY THE CONTRACTOR. THE SCOPE OF THE STRUCTURAL ENGINEER'S REVIEW WILL BE LIMITED TO CHECKING CONTRACTOR'S GENERAL CONFORMANCE WITH THE CONTRACT DOCUMENTS AND DESIGN CONCEPT. NO SHOP WORK IS PERMITTED TO COMMENCE UNTIL THE RETURN OF THE SHOP DRAWINGS BY THE GENERAL CONTRACTOR. DO NOT BEGIN SHOP WORK UNTIL SHOP DRAWINGS ARE RETURNED WITH ENGINEER'S COMMENTS.
12. USE THE PROJECT SPECIFICATIONS IN CONJUNCTION WITH THE STRUCTURAL DRAWINGS TO DETERMINE THE COMPLETE PROJECT REQUIREMENTS. ANY DISCREPANCIES OR CONFLICTS FOUND BETWEEN THE PROJECT SPECIFICATIONS AND THE STRUCTURAL DRAWINGS SHALL BE BROUGHT TO THE ATTENTION OF THE ARCHITECT OR STRUCTURAL ENGINEER IMMEDIATELY. THE STRICTEST PROVISION SHALL GOVERN UNLESS THE A/E DETERMINES OTHERWISE.

FOUNDATIONS

1. ALL EXCAVATION WORK SHALL PROCEED WITH CAUTION TO AVOID DAMAGE TO UNKNOWN UNDERGROUND UTILITIES.
2. THE FOUNDATION DESIGN IS BASED UPON THE RECOMMENDATIONS OUTLINED IN THE GEOTECHNICAL STUDY BY xxxxxxxxx (PROJECT NO. xxxxxxxxxx DATED NOVEMBER xx,20xx). CONTRACTOR SHALL REVIEW ENTIRE GEOTECHNICAL INVESTIGATION REPORT PRIOR TO EXCAVATION WORK.
3. ALL EXCAVATION AND FILL SHALL BE PERFORMED ACCORDING TO THE ABOVE REFERENCED GEOTECHNICAL REPORT.
4. ALL EXCAVATIONS SHALL BE INSPECTED BY A REPRESENTATIVE OF THE GEOTECHNICAL ENGINEER, OR AN APPROVED GEOTECHNICAL TESTING AGENCY TO VERIFY THE PROPER BEARING MATERIAL EXISTS PRIOR TO PLACING ENGINEERED FILL, FOUNDATION CONCRETE AND/OR SLAB ON GRADE. FOUNDATION ELEVATIONS SHOWN ARE FOR BIDDING PURPOSES ONLY, AND MAY VARY TO SUIT ACTUAL SUBSURFACE SOIL CONDITIONS.
5. SHALLOW SPREAD FOOTINGS BEARING ON NATURAL SOIL OR NEW GRANULAR ENGINEERED FILL ARE DESIGNED FOR A MAXIMUM SOIL BEARING PRESSURE OF 2,500 PSF. SOILS UNSUITABLE FOR SUPPORTING FOUNDATIONS SHALL BE REMOVED AND BACKFILLED TO THE DESIGN BEARING ELEVATION, AS DIRECTED BY THE GEOTECHNICAL ENGINEER.
6. ALL FOUNDATION BEARING SURFACES SHALL BE UNDISTURBED, LEVEL (WITHIN 1 IN 12), AND UNLESS NOTED OTHERWISE, ALL FOOTINGS MAY BE POURED NEAT (WITHOUT SIDE FORMS) WHERE SOIL CONDITIONS PERMIT.
7. ALL COLUMN DOWELS AND ANCHOR BOLTS SHALL BE SET BY A TEMPLATE METHOD PRIOR TO CONCRETE PLACEMENT.

CAST-IN-PLACE CONCRETE

ALL CONCRETE WORK SHALL CONFORM TO ALL REQUIREMENTS OF THE CURRENT ACI 301, "SPECIFICATIONS FOR STRUCTURAL CONCRETE" AND ACI 117 "STANDARD SPECIFICATIONS FOR TOLERANCES FOR CONCRETE CONSTRUCTION AND MATERIALS" WITH THE FOLLOWING SUPPLEMENTAL REQUIREMENTS:

1. ALL CONCRETE SHALL BE NORMAL WEIGHT WITH TYPE I OR TYPE II PORTLAND CEMENT CONFORMING TO ASTM C150 AND AGGREGATES CONFORMING TO ASTM C33.
2. CONCRETE SHALL DEVELOP THE FOLLOWING 28-DAY COMPRESSIVE STRENGTH (F'c):
   A. ALL CONCRETE WORK UNLESS NOTED OTHERWISE - 4,000 PSI.
   B. CONCRETE SHALLOW SPREAD FOOTINGS BEARING ON SOIL - 3,000 PSI
3. GROUT UNDER STEEL COLUMN AND BEAM BEARINGS SHALL BE NON-METALLIC, NON-SHRINK, NON-GAS FORMING, EXPANSIVE TYPE "SONOGROUT" BY SONNEBORN/CONTECH, "SEALTIGHT 588" BY W.R. MEADOWS, "EUCO NS" BY THE EUCLID CHEMICAL COMPANY, OR "MASTERFLOW 928" BY MASTERBUILDERS. GROUT UNDER STEEL BEARINGS SUPPORTING EQUIPMENT SHALL BE "SIKADUR-42" HIGH STRENGTH POURABLE EPOXY RESIN GROUT BY THE SIKA CORPORATION. TYPICAL, UNLESS NOTED OTHERWISE.
4. CONCRETE SHALL BE PLACED AT THE SITE WITHIN 90 MINUTES AFTER WATER HAS BEEN ADDED TO THE CEMENT AND AGGREGATE. ADDITION OF WATER TO THE MIX AT THE PROJECT SITE WILL NOT BE ALLOWED. ALL WATER MUST BE ADDED AT THE BATCH PLANT. MAXIMUM WATER CEMENT RATIO FOR SLAB ON GRADE SHALL BE 0.45.
5. MAXIMUM LENGTH OF WALL POUR BETWEEN CONSTRUCTION JOINTS SHALL NOT EXCEED 60 FEET. JOINTS NOT INDICATED ON STRUCTURAL DRAWINGS ARE NOT PERMITTED WITHOUT WRITTEN APPROVAL FROM STRUCTURAL ENGINEER.
6. MAXIMUM LENGTH OF SLAB POUR BETWEEN CONSTRUCTION JOINTS SHALL NOT EXCEED 100 FEET, WHILE MAXIMUM AREA OF A SINGLE SLAB POUR SHALL NOT EXCEED 10,000 SQUARE FEET. JOINTS NOT INDICATED ON STRUCTURAL DRAWINGS ARE NOT PERMITTED WITHOUT WRITTEN APPROVAL FROM STRUCTURAL ENGINEER.
7. CHLORIDE BASED ADMIXTURES ARE PROHIBITED IN ALL REINFORCED CONCRETE. OTHER ADMIXTURES SHALL CONFORM TO ASTM C494.
8. MAXIMUM SLUMP SHALL BE 4" +/- 1", AS DETERMINED IN ACCORDANCE WITH ASTM C143.
9. AIR ENTRAIN ALL CONCRETE EXPOSED TO WEATHER 6% +/- 1 1/2%.
10. CONCRETE FINISH:
    A. INTERIOR FLOOR SLABS - HARD TROWELED FINISH
    B. PAVING SLABS/SIDEWALKS - FLOAT/BROOM
11. CJ SHOWN ON PLAN INDICATES EITHER SLAB CONTRACTION JOINT OR CONSTRUCTION JOINT AT CONTRACTOR'S OPTION, REFER TO DETAIL 01/S-501.
12. WHERE INDICATED ON DRAWINGS PROVIDE NO. 15 LB. ASPHALT ROOFING FELT BOND BREAKER BETWEEN SLABS AND WALLS.
13. ALL REINFORCING STEEL SHALL BE DEFORMED AND CONFORM TO ASTM A615 GRADE 60, EXCEPT AS NOTED. WELDED REINFORCING STEEL SHALL BE DEFORMED AND CONFORM TO ASTM A706 GRADE 60. ALL WELDED WIRE FABRIC SHALL CONFORM TO ASTM A1064, AND BE FURNISHED IN FLAT SHEETS.
14. CONCRETE COVER ON REINFORCING STEEL SHALL BE PER CURRENT ACI 318 UNLESS NOTED OTHERWISE.
15. REINFORCEMENT SHALL BE CONTINUOUS ACROSS CONSTRUCTION JOINTS, UNLESS NOTED OTHERWISE.
16. REINFORCING BARS REQUIRED FOR PROPER SUPPORT OF THE PRINCIPAL REINFORCING SHALL BE DETAILED AND SUPPLIED BY THE CONTRACTOR WHETHER OR NOT THEY ARE INDICATED ON THE DRAWINGS.
17. ALL HOOK BARS SHALL HAVE 90 DEGREE ACI STANDARD HOOKS, UNLESS NOTED OTHERWISE. HOOKS MAY BE ROTATED TO MAINTAIN CLEARANCES. ALL BAR SPLICES AND LAPS, WHEN NOT SPECIFICALLY DIMENSIONED ON DRAWINGS, SHALL BE PER ACI STANDARD REQUIREMENTS. CLASS B LAPS SHALL BE USED, UNLESS NOTED OTHERWISE.
18. TOP AND BOTTOM BARS DESIGNATED AS CONTINUOUS IN STRUCTURAL DRAWINGS SHALL BE LAPPED AS FOLLOWS:
    A. TOP BARS NEAR MIDSPAN
    B. BOTTOM BARS DIRECTLY OVER SUPPORTS
19 ALL LAP SPLICES, WHEN NOT SPECIFICALLY DIMENSIONED ON DRAWINGS, SHALL BE PER ACI 318-14 SECTION 25.5.2.1. LAPPING BARS OF TWO DIFFERENT SIZES SHALL BE PER ACI 318-14 SECTION 25.5.2.2.
20. PROVIDE HORIZONTAL EXTERIOR CORNER BARS WITH SAME SIZE AND SPACING AS WALL REINFORCING BARS, UNLESS NOTED OTHERWISE.
21. THE PLACEMENT OF CONDUITS IN CONCRETE SHALL ONLY BE ACCEPTED IN ISOLATED CASES AND SHALL ADHERE TO THE FOLLOWING:
    A. CONDUITS PLACED IN SLAB ON GRADE SHALL BE PLACED DIRECTLY ON THE SUBGRADE OR VAPOR RETARDER. OUTSIDE DIAMETER OF CONDUIT SHALL NOT EXCEED 1/4 OF SLAB THICKNESS.
    B. ALUMINUM CONDUITS, PIPES, OR SLEEVES ARE NOT PERMITTED.
    C. OUTSIDE DIAMETER OF CONDUITS SHALL BE 1" OR LESS WHERE EMBEDDED IN STRUCTURAL SLABS, AND 1 1/2" OR LESS WHERE EMBEDDED IN BEAMS, WALLS OR COLUMNS.
    D. BUNCHING OF CONDUITS IS NOT PERMITTED. CONDUITS SHALL BE SPACED 3 DIAMETERS OR GREATER ON CENTER. NO CROSSOVERS ARE PERMITTED IN SLABS.
    E. MINIMUM CONCRETE COVER ON CONDUITS SHALL BE 1 1/2".
22. ALL INTERIOR FLOOR SLABS SHALL BE FINISHED TO THE FOLLOWING TOLERANCES AND SHALL BE MEASURED PER ASTM E1155 LATEST EDITION AND SHALL BE MEASURED WITHIN 72 HOURS OF SLAB CONCRETE PLACEMENT:
    FF (FLATNESS): 30
    FL (LEVELNESS): 20

STEEL JOISTS AND JOIST GIRDERS

1. ALL JOISTS AND GIRDERS SHALL CONFORM TO THE STEEL JOIST INSTITUTE (SJI) STANDARD SPECIFICATION, LOAD TABLES AND DETAILS FOR STEEL JOISTS AND JOIST GIRDERS.
2. NO JOISTS OR JOIST GIRDERS SHALL BE CUT OR OTHERWISE MODIFIED WITHOUT THE MANUFACTURER'S KNOWLEDGE AND WRITTEN APPROVAL.
3. JOIST BRIDGING SHALL BE FURNISHED IN ACCORDANCE WITH SJI STANDARDS EXCEPT WHERE THESE DRAWINGS DICTATE HEAVIER OR MORE FREQUENT BRIDGING. DESIGN JOISTS AND GIRDERS FOR THE UPLIFT SHOWN ON THE DESIGN DOCUMENTS.
4. THE TOP AND BOTTOM CHORDS OF THE JOISTS SHALL BE CAPABLE OF SUPPORTING LIMITED CONCENTRATED LOADS AT ANY POINT WITHOUT ADDITIONAL REINFORCING. THEY SHALL SUPPORT A CONCENTRATED LIVE LOAD OF 100 POUNDS ON THE BOTTOM CHORD AND 100 POUNDS ON THE TOP CHORD, NONCONCURRENT WITH THE SPECIFIED UNIFORM LIVE LOAD. REINFORCE THE JOISTS FOR HEAVIER CONCENTRATED LOADS WHERE INDICATED ON THE DRAWINGS.
5. LOADS ON JOISTS AND JOIST GIRDERS ARE BASED ON ALLOWABLE STRESS DESIGN.
6. TYPICAL JOIST SEAT DEPTH SHALL BE 2 1/2", TYPICAL UNLESS NOTED OTHERWISE.
7. SLOPE JOIST AND JOIST GIRDER BEARING SEAT OR SLOPE COLUMN CAP PLATES TO ACHIEVE FULL CONTACT WITH BEARING SURFACES.
8. ALL STEEL JOISTS SHALL BE STORED AND INSTALLED PER SJI RECOMMENDATIONS.
9 DO NOT SUSPEND ANY OBJECT OR LOAD FROM JOIST BRIDGING.

MASONRY

MASONRY WORK SHALL CONFORM TO ALL REQUIREMENTS OF THE CURRENT [[ACI 530 "BUILDING CODE REQUIREMENTS FOR MASONRY STRUCTURES" AND ACI 530.1 "SPECIFICATION FOR MASONRY STRUCTURES"]] IBC 2015]] [TMS 402 "BUILDING CODE FOR MASONRY STRUCTURES" AND TMS 602 "SPECIFICATION FOR MASONRY STRUCTURES"]] IBC 2018]], WITH THE FOLLOWING SUPPLEMENTAL REQUIREMENTS:

1. HOLLOW CONCRETE MASONRY UNITS (CMU) SHALL BE IN ACCORDANCE WITH ASTM C90, NORMAL WEIGHT. MINIMUM 28-DAY COMPRESSIVE STRENGTH OF UNITS SHALL BE 2,000 PSI BASED ON THE NET AREA.
2. MORTAR FOR CONCRETE MASONRY SHALL BE TYPE S, IN ACCORDANCE WITH ASTM C270, AND SHALL HAVE A MINIMUM COMPRESSIVE STRENGTH OF 1800 PSI IN 28 DAYS. ALL UNITS SHALL BE LAID WITH FULL MORTAR COVERAGE ON HEAD, BED (FACE SHELLS), WEBS, AND COLLAR JOINTS.
3. ALL MASONRY REINFORCING STEEL SHALL BE DEFORMED AND CONFORM TO ASTM A615 OR A996 GRADE 60. THE MINIMUM LAP FOR SPLICES SHALL BE 48 BAR DIAMETERS. REINFORCING SHALL BE HELD IN POSITION AT INTERVALS NOT TO EXCEED 192 BAR DIAMETERS.
4. GROUT SHALL CONFORM TO ASTM C476, "FINE" AND SHALL HAVE A MINIMUM 28-DAY COMPRESSIVE STRENGTH OF 2,000 PSI AND A SLUMP BETWEEN 8" AND 11". THE LOW-LIFT METHOD SHALL BE USED TO PLACE GROUT.
5. ALL VERTICAL MASONRY REINFORCING SHALL BE PLACED IN FULLY GROUTED CELLS.
6. DOWELS FROM FOUNDATION INTO MASONRY WALLS SHALL MATCH SIZE AND SPACING OF WALL VERTICAL BARS, UNLESS NOTED OTHERWISE. DOWELS SHALL BE PROVIDED AND INSTALLED BY THE FOUNDATION CONTRACTOR, BUT MASONRY CONTRACTOR SHALL REVIEW THE ACCURACY OF THE DOWEL LAYOUT AND PLACEMENT PRIOR TO THE PLACEMENT OF FOUNDATION CONCRETE.
7. VERTICAL BARS SHALL BE CONTINUOUS THROUGH BOND BEAMS UNLESS NOTED OTHERWISE.
8. ALL CMU MASONRY WALLS SHALL BE REINFORCED WITH 9 GAUGE STANDARD LADDER-TYPE, CONFORMING TO ASTM A82, AND CONTINUOUSLY PLACED IN ALTERNATE HORIZONTAL MORTAR JOINTS (16" OC VERTICALLY). ALL WIRE REINFORCING SHALL BE HOT-DIPPED GALVANIZED, AND SHALL CONFORM TO ASTM A951. HORIZONTAL JOINT REINFORCING SHALL ALSO BE PROVIDED AT THE TOP AND BOTTOM OF WALL OPENINGS, AND SHALL EXTEND NOT LESS THAN 2'-0" PAST THE OPENING.
9. ALL HOLLOW METAL DOOR/WINDOW FRAMES AND STRUCTURAL STEEL JAMB/HEADER TO BE INSTALLED WITH ADJUSTABLE ANCHORS AND "BUILT INTO" THE CMU. GROUT FRAMES SOLID AS CMU INSTALLATION PROGRESSES.
10. PROVIDE A VERTICAL CONTROL JOINT AT LOCATIONS INDICATED ON ARCHITECTURAL ELEVATION SHEETS. BOND BEAM REINFORCING AND GROUT SHALL BE CONTINUOUS AT MASONRY WALL CONTROL JOINTS.
11. PROVIDE LINTELS OVER OPENINGS IN MASONRY WALLS. SEE SHEET S-503 FOR LINTEL SIZES AND REFER TO ARCHITECTURAL AND MECHANICAL DRAWINGS (WHEN APPLICABLE) FOR EXACT NUMBER, LOCATION, AND SIZES OF WALL OPENINGS.
12. SOLID FILL ALL MASONRY POCKETS AND BEARINGS WITH MASONRY AND DRY PACK GROUT.

MARK	DESCRIPTION	DATE

ISSUE DATE: MM-DD-YYYY
SOLICITATION NO.: 70CMSW22Q00000001
CONTRACT NO.: 70ZI0518KZFNPL08

DESIGNED BY: Designer
DRAWN BY: Author
CHECKED BY: Checker
SUBMITTED BY:
SIZE: ANSI D

US IMMIGRATION AND CUSTOMS ENFORCEMENT (ICE)
9401 BOGGY CREEK DRIVE
ORLANDO, FL 32837

KZF DESIGN
700 BROADWAY ST
CINCINNATI, OH 45202

FT BENNING, GEORGIA
IMMIGRATION & CUSTOMS ENFORCEMENT (ICE)

GENERAL NOTES

SHEET ID
MCB
S-001

JAN 06, 2023 - FINAL SUBMITTAL (35%)

NOT FOR CONSTRUCTION

STRUCTURAL STEEL

THE FABRICATION AND ERECTION OF STRUCTURAL STEEL SHALL CONFORM TO ALL REQUIREMENTS OF THE CURRENT AISC 360 "SPECIFICATION FOR STRUCTURAL STEEL BUILDINGS" AND AISC 303 "CODE OF STANDARD PRACTICE FOR STEEL BUILDINGS AND BRIDGES" WITH THE FOLLOWING SUPPLEMENTAL REQUIREMENTS:

1. WIDE FLANGE ROLLED STEEL SHAPES SHALL CONFORM TO ASTM A992, Fy=50 KSI, WHILE ALL PLATES, BARS, CHANNELS, AND ANGLES SHALL CONFORM TO ASTM A36, Fy=36 KSI. HOLLOW STRUCTURAL SECTIONS (HSS) SHALL CONFORM TO ASTM A500, GRADE C, WITH A MINIMUM YIELD STRESS (Fy) OF 50 KSI FOR SQUARE AND RECTANGULAR SHAPES, AND A MINIMUM YIELD STRESS (Fy) OF 46 KSI FOR ROUND SHAPES.
2. SPLICING OF STRUCTURAL STEEL IS PROHIBITED EXCEPT AS DETAILED.
3. ALL STRUCTURAL STEEL SHALL BE NEW UNLESS NOTED OTHERWISE, AND SHALL BE MADE FREE OF RUST, SCALE, ETC., AND SHIPPED WITH ONE COAT OF OXIDE PRIMER. ALL STEEL TO RECEIVE FIREPROOFING SHALL NOT BE PRIME PAINTED, AND ALL STEEL EXPOSED TO WEATHER OR BELOW GRADE SHALL BE HOT-DIP GALVANIZED, EXCEPT AS NOTED.
4. ALL BOLTS FOR STRUCTURAL STEEL SHALL CONFORM TO ASTM F3125 GRADE A325X AND SHALL BE 3/4" DIAMETER MINIMUM UNLESS NOTED OTHERWISE. BOLTS SHALL BE INSTALLED WITH VISUAL TENSION INDICATORS, ASTM A563 NUTS, AND SHALL HAVE AN ASTM F436 HARDENED STEEL WASHER UNDER THE TURNED ELEMENT. BOLTS FOR JOISTS AND JOISTS GIRDERS SHALL BE PER SJI.
5. WELDING SHALL CONFORM TO THE CURRENT AWS D1.1 "STRUCTURAL WELDING CODE-STEEL", AND WELDING ELECTRODES SHALL BE E70. ALL FIELD WELDS ON GALVANIZED STEEL SHALL BE TOUCHED UP WITH COLD GALVANIZING COMPOUND.
6. WELDS SHALL BE MADE ONLY BY CERTIFIED WELDERS AND WELDING OPERATORS WHO HAVE BEEN PREVIOUSLY QUALIFIED BY TESTS AS PRESCRIBED IN THE CURRENT AWS D1.1 "STRUCTURAL WELDING CODE-STEEL". PROOF OF CERTIFICATION SHALL BE SUBMITTED TO THE OWNER FOR APPROVAL BEFORE ANY WELDING IS PERMITTED TO BEGIN.
7. ANCHOR BOLTS FOR COLUMNS SHALL CONFORM TO ASTM F1554, GRADE AS NOTED ON DRAWINGS, AND SHALL BE SET BY A TEMPLATE METHOD, OR AN APPROVED EQUIVALENT METHOD.
8. ALL COLUMN CAP PLATES SHALL BE 5/8" UNLESS NOTED OTHERWISE.
9. DESIGN CONNECTIONS FOR THE FULL UNIFORM LOAD CAPACITY OF THE CONTINUOUS BRACED MEMBER, UNLESS NOTED OTHERWISE.

STEEL ROOF DECK

1. METAL DECK FOR ROOFS SHALL CONFORM TO THE STEEL DECK INSTITUTE DESIGN MANUAL FOR COMPOSITE DECKS, FORM DECKS AND ROOF DECKS.
2. ALL STEEL ROOF DECK SHALL BE GALVANIZED G60 AND INSTALLED CONTINUOUS OVER A MINIMUM OF 3 SPANS, UNLESS NOTED OTHERWISE. SPACING BETWEEN FLUTES SHALL BE COORDINATED WITH ROOF INSULATION REQUIREMENTS.
3. ROOF DECK SHALL BE FASTENED TO ALL SUPPORTS WITH 5/8" DIAMETER PUDDLE WELDS WITH A 36/5 PATTERN AND AT 6" OC AT ALL EDGES. DECK SIDELAPS SHALL BE FASTENED WITH #10 TEK SCREWS AT 1/4 POINTS. UNLESS NOTED OTHERWISE, ALL DECK SHALL HAVE A MINIMUM END LAP OF 3".
4. THE STEEL ROOF DECK FUNCTIONS AS A STRUCTURAL ELEMENT IN RESISTING LATERAL LOADS AND PROVIDES OVERALL STABILITY FOR THE BUILDING. THEREFORE, TEMPORARY CONSTRUCTION BRACING SHALL NOT BE REMOVED UNTIL ALL STEEL DECK IS COMPLETELY FASTENED IN PLACE.
5. THE STEEL ROOF DECK SHALL HAVE THE FOLLOWING MINIMUM PROPERTIES:
   1 1/2" x 22 GA. DECK - Ip=0.155 IN4, Sp=0.186 IN3, In=0.183 IN4, Sn=0.192 IN3, Fy=33KSI

SUPPORT OF NON-STRUCTURAL COMPONENTS

1. COMPONENT LOADS SHALL BE DISTRIBUTED TO THE STRUCTURE SO THAT THE COLLATERAL LOAD ALLOWANCES PROVIDED WITH THE STRUCTURAL DESIGN DATA ARE NEVER EXCEEDED. SUPPORT ANCHORS SHALL HAVE AN ULTIMATE SAFETY FACTOR OF AT LEAST 4.0.
2. LOADS SUPPORTED FROM BAR JOISTS OR JOIST GIRDERS SHALL BE APPLIED AT A PANEL POINT. IF LOADS ARE LOCATED OFF A PANEL POINT, REINFORCE THE JOIST/JOIST GIRDER PER 01/S-504. LOADS SHALL BE APPLIED IN A MANNER WHICH DOES NOT CAUSE TORSION ABOUT THE LONGITUDINAL AXIS OF THE JOIST OR JOIST GIRDER.
3. COORDINATE AND VERIFY EXACT SIZE AND LOCATION OF MECHANICAL UNITS AND ALL FRAMED OPENINGS IN FLOORS AND/OR ROOF WITH MECHANICAL DRAWINGS AND EQUIPMENT SUPPLIER. HVAC CONTRACTOR SHALL PROVIDE ACCURATE DIMENSIONAL INFORMATION TO STEEL FABRICATOR PRIOR TO FABRICATION OF ALL SUPPORT FRAMES.
4. DO NOT HANG OR OTHERWISE SUPPORT ANY ITEMS DIRECTLY FROM STEEL ROOF DECK. ROOF CURBS MUST BEAR DIRECTLY ON SUPPORT STEEL WITH SHIMS TO TRANSFER LOADS THROUGH THE ROOF DECK.

MISCELLANEOUS FRAMING NOTES

1. UNLESS NOTED OTHERWISE ON FRAMING PLANS, FLOOR BEAMS, ROOF BEAMS, AND JOISTS ARE EVENLY SPACED BETWEEN COLUMN GRID LINES.

STRUCTURAL DELEGATED DESIGNS AND DEFFERED SUBMITTALS

1. STRUCTURAL DELEGATED DESIGNS AND SUBSEQUENT DEFERRED SUBMITTALS ARE FOR ELEMENTS, PARTS, OR PORTIONS OF THE OVERALL STRUCTURAL SYSTEM THAT ARE INDICATED OR REFERRED TO ON THESE DRAWINGS AND THAT ARE CRITICAL TO THE PERFORMANCE OF THE OVERALL STRUCTURAL SYSTEM. DESIGN CRITERIA HAS BEEN PROVIDED FOR THESE ITEMS IN THE STRUCTURAL NOTES, PLANS, AND DETAILS.
2. STRUCTURAL DEFERRED SUBMITTALS ARE COMPLETE PACKAGES TO BE SUBMITTED FOR REVIEW THAT INCLUDE DRAWINGS AND CALCULATIONS FOR ALL DELEGATED DESIGN ITEMS AND THEIR CONNECTIONS. DEFERRED SUBMITTALS SHALL BEAR THE STAMP AND SIGNATURE OF THE DESIGN PROFESSIONAL RESPONSIBLE FOR THEIR DESIGN.
3. ENGINEER WILL REVIEW STRUCTURAL DEFERRED SUBMITTALS TO VERIFY DESIGN CRITERIA IS COMPLIANT WITH THE APPROVED CONSTRUCTION DOCUMENTS.
4. STRUCTURAL DELEGATED DESIGN COMPONENTS SHALL NOT BE INSTALLED UNTIL APPROVED BY THE BUILDING OFFICIAL.
5. STRUCTURAL DELEGATED DESIGN ITEMS REQUIRING DEFERRED SUBMITTALS INCLUDE, BUT ARE NOT LIMITED TO:
   A OPEN WEB JOISTS & GIRDERS, BRIDGING, BRACING, CONNECTIONS, AND RELATED COMPONENTS.

ADHESIVE FASTENERS

1 ANCHORAGE TO CONCRETE: EPOXY OR HYBRID ADHESIVE COMPLYING WITH ICC-ES ACCEPTANCE CRITERIA AC 308 FOR USE IN CRACKED CONCRETE. SUBMIT ICC-ES EVALUATION REPORT DEMONSTRATING COMPLIANCE WITH GOVERNING CODE PRIOR TO INSTALLATION. INSTALL PER ICC-ES EVALUATION REPORT AND MANUFACTURER'S PRINTED INSTALLATION INSTRUCTIONS (MPII).

2 ANCHORAGE TO SOLID GROUTED CONCRETE MASONRY UNITS: EPOXY OR HYBRID ADHESIVE COMPLYING WITH ICC-ES ACCEPTANCE CRITERIA AC 58. SUBMIT ICC-ES EVALUATION REPORT DEMONSTRATING COMPLIANCE WITH GOVERNING CODE PRIOR TO INSTALLATION. INSTALL PER ICC-ES EVALUATION REPORT AND MANUFACTURER'S PRINTED INSTALLATION INSTRUCTIONS (MPII).

3 THREADED RODS SHALL BE ASTM A36, SIZE AND EMBEDMENT AS INDICATED ON THE DRAWINGS. ALTERNATIVELY, THREADED RODS MAY BE AS SPECIFIED IN MANUFACTURER'S TESTED PRODUCT ASSEMBLY.

4 CONDUCT JOB-SITE TRAINING OF ALL CONTRACTOR'S PERSONNEL INSTALLING THIS PRODUCT FOR SAFE AND PROPER INSTALLATION, HANDLING, AND STORAGE OF THE ADHESIVE SYSTEM.

5 SELECTED PRODUCT SHALL BE SUITABLE FOR PREVAILING WEATHER CONDITIONS AT THE TIME OF INSTALLATION.

6 CONTRACTOR SHALL VERIFY THAT THE SHELF LIFE OF THE ADHESIVE HAS NOT BEEN EXCEEDED ON THE DATE OF INSTALLATION.

7 TESTING AND INSPECTION: REFER TO ICC-ER ESR REPORT(S) AND SPECIAL INSPECTION TABLE FOR TESTING AND INSPECTION REQUIREMENTS. WHERE TESTING IS REQUIRED, ANCHORS SHALL BE TESTED TO MANUFACTURER'S RECOMMENDED LOADS UNLESS OTHERWISE INDICATED.

MECHANICAL FASTENERS

1 ANCHORAGE TO CONCRETE: ANCHOR COMPLYING WITH ICC-ES ACCEPTANCE CRITERIA AC 193 AND ACI 355.2-07 FOR USE IN CRACKED CONCRETE. SUBMIT ICC-ES EVALUATION REPORT DEMONSTRATING COMPLIANCE WITH GOVERNING CODE PRIOR TO INSTALLATION. INSTALL PER ICC-ES EVALUATION REPORT AND MANUFACTURER'S PRINTED INSTALLATION INSTRUCTIONS (MPII).

2 ANCHORAGE TO CONCRETE MASONRY UNITS: ANCHOR COMPLYING WITH ICC-ES ACCEPTANCE CRITERIA AC 01 INCLUDING SEISMIC TESTS. SUBMIT ICC-ES EVALUATION REPORT DEMONSTRATING COMPLIANCE WITH GOVERNING CODE PRIOR TO INSTALLATION. INSTALL PER ICC-ES EVALUATION REPORT AND MANUFACTURER'S PRINTED INSTALLATION INSTRUCTIONS (MPII).

3 EXPANSION ANCHORS SHALL BE THE TYPE, SIZE, AND EMBEDMENT INDICATED ON DRAWINGS. INSTALL PER MANUFACTURER'S RECOMMENDATIONS AND ICC-ER REPORTS.

4 TESTING AND INSPECTION: REFER TO ICC-ER ESR REPORT(S) AND SPECIAL INSPECTION TABLE FOR TESTING AND INSPECTION REQUIREMENTS. WHERE TESTING IS REQUIRED, ANCHORS SHALL BE TESTED TO MANUFACTURER'S RECOMMENDED LOADS UNLESS OTHERWISE INDICATED.

MARK	DESCRIPTION	DATE

DESIGNED BY: Designer
DRAWN BY: Author
CHECKED BY: Checker
ISSUE DATE: MM-DD-YYYY
SOLICITATION NO.: 70CMSW22Q00000001
CONTRACT NO.: 70Z05018KZFNPL08
SUBMITTED BY:
HUTZEL
SIZE: ANSI D

US IMMIGRATION AND CUSTOMS ENFORCEMENT (ICE)
9401 BOGGY CREEK DRIVE
ORLANDO, FL 32837

KZF DESIGN
700 BROADWAY STREET
CINCINNATI, OH 45202

FT BENNING, GEORGIA
IMMIGRATION & CUSTOMS ENFORCEMENT (ICE)

GENERAL NOTES

SHEET ID
MCB
S-002

JAN 06, 2023 - FINAL SUBMITTAL (35%)

NOT FOR CONSTRUCTION

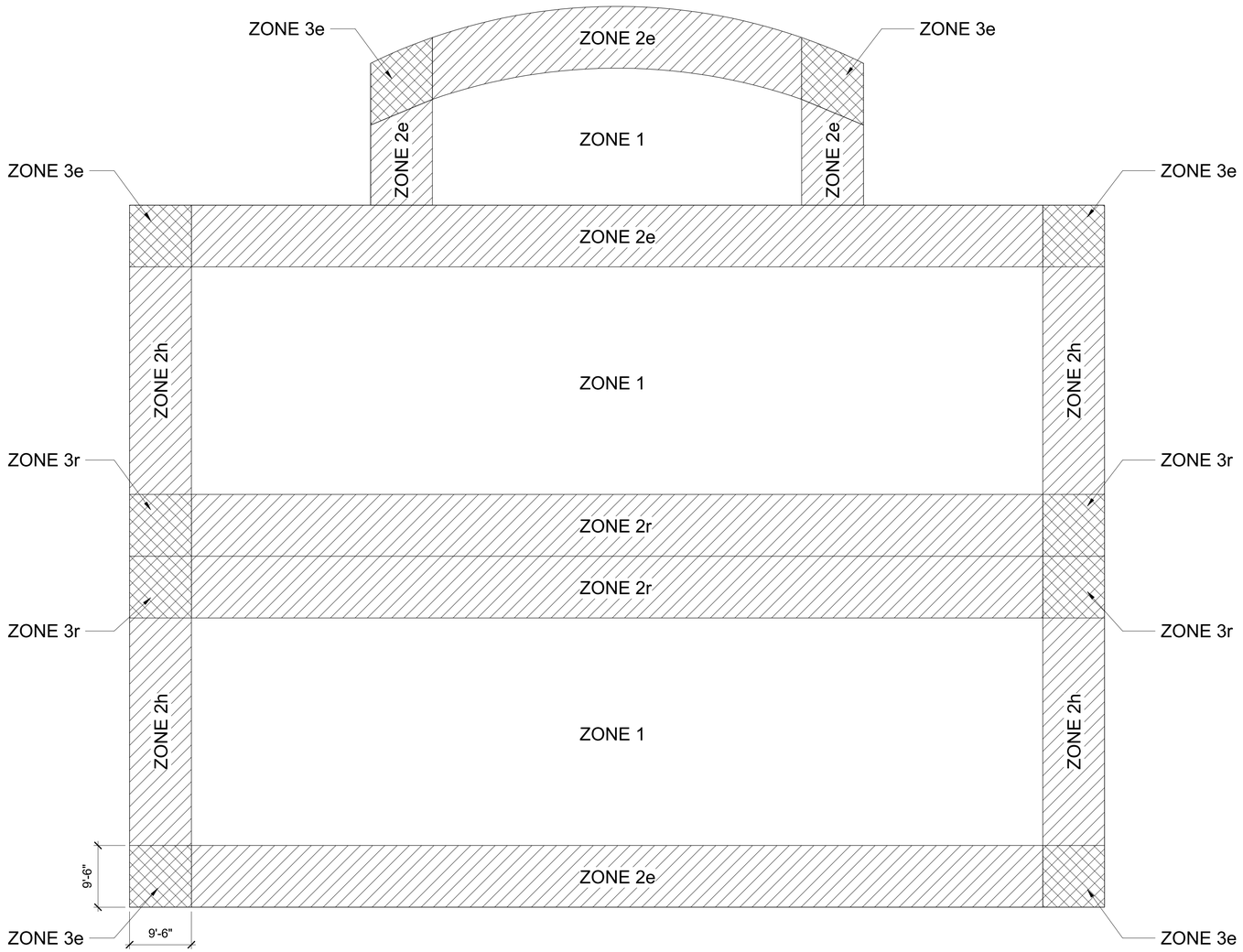

STRUCTURAL DESIGN DATA

GOVERNING DESIGN SPECIFICATION

2018 INTERNATIONAL BUILDING CODE AS MODIFIED BY THE UFC 3-301-01

RISK CATEGORY

CATEGORY:	II	(IBC 1604.5/ASCE 7-1.5)

FLOOR LIVE LOADS

OFFICE:	50 PSF	(IBC 1607.1/ASCE 7-4.3.1)
LOBBIES & FIRST FLOOR CORRIDORS:	100 PSF	
PARTITION ALLOWANCE:	15 PSF	
LIGHT STORAGE:	125 PSF	

ROOF LOADS

ROOF LIVE LOAD:	20 PSF	(IBC 1607.13/ASCE 7-4.3.1)
ROOF DEAD LOAD:		
INSULATION AND ROOF MEMBRANE:	3 PSF	
ROOF DECK:	2 PSF	
JOIST, JOIST GIRDERS, BRIDGING:	4 PSF	
MECHANICAL, ELECTRICAL AND FIRE PROTECTION:	4 PSF	
COLLATERAL:	5 PSF	
TOTAL:	18 PSF	

SNOW LOAD DESIGN DATA

ROOF SNOW LOAD:		
A. GROUND SNOW LOAD (Pg):	5 PSF	(IBC 1608.2/ASCE 7-7.2)
B. FLAT ROOF SNOW LOAD (Pf):	3.5 PSF	(IBC 1608.1/ASCE 7-7.3)
C. SLOPED ROOF SNOW LOAD (Ps):	3.5 PSF	(ASCE 7-7.3.4)
D. SNOW EXPOSURE FACTOR (Ce):	1.0	(IBC 1608.1/ASCE 7-7.3.1)
E. THERMAL FACTOR (Ct):	1.0	(IBC 1608.1/ASCE 7-7.3.2)
F. SNOW LOAD IMPORTANCE FACTOR (Is):	1.00	(IBC 1608.1/ASCE 7-7.3.3)
G. SNOW DRIFTING PER REQUIREMENTS OF:		(IBC1608.1/ASCE 7-7.7.1)

WIND LOAD DESIGN DATA

WIND LOAD:		
A. BASIC WIND SPEED (3-SECOND GUST):	109 MPH	(IBC 1609.3/ASCE 7-26.5.1)
B. ENCLOSURE CLASSIFICATION:	ENCLOSED	(ASCE 7-26.12)
C. WIND EXPOSURE CATEGORY:	C	(IBC 1609.4/ASCE 7-26.7.3)
D. INTERNAL PRESSURE COEFFICIENT (GCpi):	±0.18	(ASCE 7-26.13)
E. WIND DESIGN PRESSURE (COMPONENTS AND CLADDING) PER:		(ASCE 7-30.1)

SEISMIC LOAD DESIGN DATA

EARTHQUAKE DESIGN DATA:		
A. SEISMIC IMPORTANCE FACTOR (Ie):	1.00	(ASCE 7-11.5)
B. SPECTRAL RESPONSE ACCELERATIONS (Ss):	0.116g	(IBC 1613.2.1/ASCE 7-11.4.2)
SPECTRAL RESPONSE ACCELERATIONS (S1)	0.069g	(IBC 1613.2.1/ASCE 7-11.4.2)
C. SOIL SITE CLASS (PRESUMED):	D	(IBC 1613.2.2/ASCE 7-11.4.3)
D. SPECTRAL RESPONSE COEFFICIENT (Sds):	0.124g	(IBC 1613.2.4/ASCE 7-11.4.5)
SPECTRAL RESPONSE COEFFICIENT (Sd1):	0.111g	(IBC 1613.2.4/ASCE 7-11.4.5)
E. SEISMIC DESIGN CATEGORY:	B	(IBC 1613.2.5/ASCE 7-11.6)
F. BASIC SEISMIC-FORCE-RESISTING SYSTEMS: ORDINARY REINFORCED MASONRY SHEAR WALLS		(ASCE 7-12.2.1)
G. RESPONSE MOD FACTOR (R):	2	(ASCE 7-12.2.1)
H. ANALYSIS PROCEDURE:	ELFP	(ASCE 7-12.8)
I. DESIGN BASE SHEAR:	0.062 x W	(ASCE 7-12.8.1)

GROSS COMPONENT AND CLADDING WIND LOAD (PSF)

ZONE \ EFFECTIVE AREA SQ FT	<10	20	50	100	200	>500
1	+17.2 -52.4	+16.0 -52.4	+16.0 -31.9	+16.0 -16.3	+16.0 -16.3	+16.0 -16.3
2e	+17.2 -52.4	+16.0 -52.4	+16.0 -31.9	+16.0 -16.3	+16.0 -16.3	+16.0 -16.3
2h	+17.2 -76.4	+16.0 -66.1	+16.0 -52.4	+16.0 -42.0	+16.0 -31.7	+16.0 -28.4
2r	+17.2 -76.4	+16.0 -66.1	+16.0 -52.4	+16.0 -42.0	+16.0 -31.7	+16.0 -28.4
3e	+17.2 -76.4	+16.0 -66.1	+16.0 -52.4	+16.0 -42.0	+16.0 -31.7	+16.0 -28.4
3r	+17.2 -90.8	+16.0 -77.8	+16.0 -60.6	+16.0 -47.6	+16.0 -47.6	+16.0 -47.6
4	+28.4 -30.8	+27.1 -29.5	+25.4 -27.8	+24.1 -26.5	+22.8 -25.2	+21.1 -23.6
5	+28.4 -38.0	+27.1 -35.4	+25.4 -32.0	+24.1 -29.5	+22.8 -26.9	+21.1 -23.6

COMPONENT AND CLADDING TABLE NOTES:

1. WIND DESIGN PRESSURE (COMPONENTS AND CLADDING): REFER TO DIAGRAM FOR ROOF ZONE 1, 2e, 2h, 2r, 3e, 3r. ZONES 4 AND 5 ARE WALL ZONES THAT CORRESPOND TO THE LOCATION OF ROOF ZONES 2 AND 3, RESPECTIVELY WITH THE SAME "a".
2. JOISTS FABRICATOR TO PROVIDE ADDITIONAL JOIST BRIDGING TO SUIT UPLIFT CONDITIONS.
3. POSITIVE AND NEGATIVE VALUES REFER TO PRESSURE ACTING TOWARD AND AWAY FROM THE SURFACE, RESPECTIVELY. THE VALUES INCLUDE EXTERNAL AND INTERNAL PRESSURE OR SUCTION.
4. WIND LOADS IN THE TABLE ARE GROSS COMPONENT AND CLADDING LOADS CALCULATED PER ASCE 7-16. MULTIPLY BY 0.6 FOR USE IN ALLOWABLE STRESS DESIGN LOAD COMBINATIONS.
5. GROSS DEAD LOAD TO BE USED FOR THIS LOAD COMBINATION IS 9 PSF.
6. THE DESIGN WIND PRESSURE SHALL NOT BE LESS THAN A NET PRESSURE OF 16 LB/SQ FT ACTING IN EITHER DIRECTION NORMAL TO THE SURFACE.

MARK	DESCRIPTION	DATE

DESIGNED BY: Designer
DRAWN BY: Author
CHECKED BY: Checker
SUBMITTED BY:
SIZE: ANSI D
ISSUE DATE: MM-DD-YYYY
SOLICITATION NO.: 70CMSW22Q00000001
CONTRACT NO.: 70Z05018DKZFNPL08

US IMMIGRATION AND CUSTOMS ENFORCEMENT (ICE)
9454 BEE CAVE DRIVE
ORLANDO, FL 32837

KZF DESIGN
700 BROADWAY STREET
CINCINNATI, OH 45202

FT BENNING, GEORGIA
IMMIGRATION & CUSTOMS ENFORCEMENT (ICE)

COMPONENTS AND CLADDING AND DESIGN DATA

SHEET ID
MCB
S-003

JAN 06, 2023 - FINAL SUBMITTAL (35%)

NOT FOR CONSTRUCTION

SPECIAL INSPECTION GENERAL NOTES

			IBC REFERENCE
1.		REPORT REQUIREMENT	1704.2.4
	A.	APPROVED AGENCIES SHALL KEEP RECORDS OF SPECIAL INSPECTIONS AND TESTS.	
	B.	THE APPROVED AGENCY SHALL SUBMIT REPORTS OF SPECIAL INSPECTIONS AND TESTS TO THE BUILDING OFFICIAL AND TO THE REGISTERED DESIGN PROFESSIONAL IN RESPONSIBLE CHARGE.	
	C.	REPORTS SHALL INDICATE THAT WORK INSPECTED OR TESTED WAS OR WAS NOT COMPLETED IN CONFORMANCE TO APPROVED CONSTRUCTION DOCUMENTS.	
	D.	DISCREPANCIES SHALL BE BROUGHT TO THE IMMEDIATE ATTENTION OF THE CONTRACTOR FOR CORRECTION. IF THEY ARE NOT CORRECTED, THE DISCREPANCIES SHALL BE BROUGHT TO THE ATTENTION OF THE BUILDING OFFICIAL AND TO THE REGISTERED DESIGN PROFESSIONAL IN RESPONSIBLE CHARGE PRIOR TO THE COMPLETION OF THAT PHASE OF THE WORK.	
	E.	A FINAL REPORT DOCUMENTING REQUIRED SPECIAL INSPECTIONS AND TESTS, AND CORRECTION OF ANY DISCREPANCIES NOTED IN THE INSPECTIONS OR TESTS, SHALL BE SUBMITTED AT A POINT IN TIME AGREED UPON PRIOR TO THE START OF WORK BY THE OWNER OR THE OWNER'S AUTHORIZED AGENT TO THE BUILDING OFFICIAL.	
2.		DEFINITIONS	202
	A.	CONTINUOUS SPECIAL INSPECTION: SPECIAL INSPECTION BY THE SPECIAL INSPECTOR WHO IS PRESENT CONTINUOUSLY WHEN AND WHERE THE WORK TO BE INSPECTED IS BEING PERFORMED.	
	B.	PERIODIC SPECIAL INSPECTION: SPECIAL INSPECTION BY THE SPECIAL INSPECTOR WHO IS INTERMITTENTLY PRESENT WHERE THE WORK TO BE INSPECTED HAS BEEN OR IS BEING PERFORMED.	
3.		INSPECTION OF FABRICATORS	1704.2.5
	A.	SPECIAL INSPECTIONS REQUIRED BY THESE SCHEDULES APPLY TO WORK WHETHER COMPLETED ON SITE OR ELSEWHERE, SUCH AS AT A FABRICATOR'S SHOP.	
	B.	SPECIAL INSPECTOR SHALL VERIFY THAT FABRICATOR MAINTAINS DETAILED FABRICATION AND QUALITY CONTROL PROCEDURES, AND SHALL REVIEW PROCEDURES FOR COMPLETENESS RELATIVE TO THE CODE REQUIREMENTS FOR FABRICATOR'S SCOPE OF WORK.	1704.2.5.1
	C.	SPECIAL INSPECTIONS ARE NOT REQUIRED FOR WORK DONE ON THE PREMISES OF A FABRICATOR REGISTERED AND APPROVED BY THE BUILDING OFFICIAL TO PERFORM SUCH WORK WITHOUT SPECIAL INSPECTION. AT COMPLETION OF FABRICATION, THE APPROVED FABRICATOR SHALL SUBMIT A CERTIFICATE OF COMPLIANCE STATING THAT THE WORK WAS PERFORMED IN ACCORDANCE WITH THE CONSTRUCTION DOCUMENTS.	1704.2.5.1
4.		REFERENCE STANDARDS	
	A.	THE SPECIAL INSPECTOR SHALL HAVE AVAILABLE ON THE SITE A COPY OF THE STANDARD DOCUMENTS REFERENCED FOR EACH TASK BEING INSPECTED.	

REQUIRED SPECIAL INSPECTIONS OF SOILS

	TYPE	CONTINUOUS	PERIODIC	REFERENCED STANDARD	IBC REFERENCE
1.	VERIFY MATERIALS BELOW SHALLOW FOUNDATIONS ARE ADEQUATE TO ACHIEVE THE DESIGN BEARING CAPACITY.		X		1705.6
2.	VERIFY EXCAVATIONS ARE EXTENDED TO PROPER DEPTH AND HAVE REACHED PROPER MATERIAL.		X		1705.6
3.	PERFORM CLASSIFICATION AND TESTING OF COMPACTED FILL MATERIALS.		X		1705.6
4.	VERIFY USE OF PROPER MATERIALS, DENSITIES AND LIFT THICKNESSES DURING PLACEMENT AND COMPACTION OF COMPACTED FILL.	X			1705.6
5.	PRIOR TO PLACEMENT OF COMPACTED FILL, INSPECT SUBGRADE AND VERIFY THAT SITE HAS BEEN PREPARED PROPERLY.		X		1705.6
	NOTES:				
1.	THE PROJECT GEOTECHNICAL REPORT AND THE CONSTRUCTION DOCUMENTS PREPARED BY THE ENGINEER OF RECORD SHALL BE USED TO DETERMINE COMPLIANCE.				
2.	DURING FILL PLACEMENT, THE SPECIAL INSPECTOR SHALL DETERMINE THAT PROPER MATERIALS AND PROCEDURES ARE USED IN ACCORDANCE WITH THE PROVISIONS OF THE GEOTECHNICAL REPORT.				

REQUIRED SPECIAL INSPECTIONS OF CONCRETE CONSTRUCTION

	TYPE	CONTINUOUS	PERIODIC	REFERENCED STANDARD	IBC REFERENCE
1.	INSPECT REINFORCEMENT AND VERIFY PLACEMENT.		X	ACI 318 CH. 20, 25.2, 25.3, 26.6.1-26.6.3	1908.4
2.	REINFORCING BAR WELDING:			AWS D1.4 ACI 318: 26.6.4	
	A. VERIFY WELDABILITY OF REINFORCING BARS OTHER THAN ASTM A706;		X		
	B. INSPECT SINGLE-PASS FILLET WELDS, MAXIMUM 5/16"		X		
	C. INSPECT ALL OTHER WELDS.	X			
3.	INSPECT ANCHORS CAST IN CONCRETE.		X	ACI 318: 17.8.2	
4.	INSPECT ANCHORS POST-INSTALLED IN HARDENED CONCRETE MEMBERS.			SEE NOTE 1 BELOW	
	A. ADHESIVE ANCHORS INSTALLED IN HORIZONTALLY OR UPWARDLY INCLINED ORIENTATIONS TO RESIST SUSTAINED TENSION LOADS.	X		ACI 318: 17.8.2.4	
	B. MECHANICAL ANCHORS AND ADHESIVE ANCHORS NOT DEFINED IN 4.A.		X	ACI 318: 17.8.2	
5.	VERIFY USE OF REQUIRED DESIGN MIX.		X	ACI 318: Ch. 19, 26.4.3, 26.4.4	1904.1, 1904.2, 1908.2, 1908.3
6.	PRIOR TO CONCRETE PLACEMENT, FABRICATE SPECIMENS FOR STRENGTH TESTS, PERFORM SLUMP AND AIR CONTENT TESTS, AND DETERMINE THE TEMPERATURE OF THE CONCRETE.	X		ASTM C172 ASTM C31 ACI 318: 26.4, 26.12	1908.10
7.	INSPECT CONCRETE PLACEMENT FOR PROPER APPLICATION TECHNIQUES.	X		ACI 318: 26.5	1908.6, 1908.7, 1908.8
8.	VERIFY MAINTENANCE OF SPECIFIED CURING TEMPERATURE AND TECHNIQUES.		X	ACI 318: 26.5.3-26.5.5	1908.9
9.	INSPECT FORMWORK FOR SHAPE, LOCATION AND DIMENSIONS OF THE CONCRETE MEMBER BEING FORMED.		X	ACI 318: 26.11.1.2(b)	
	NOTES:				
1.	ESR REPORTS CORRESPONDING TO EACH POST-INSTALLED ANCHOR PRODUCT SHALL BE REVIEWED FOR SPECIAL INSPECTION REQUIREMENTS. SUCH REQUIREMENTS SHALL BE COMPLETED IN ACCORDANCE WITH THESE SPECIAL INSPECTION TABLES.				

REQUIRED SPECIAL INSPECTIONS OF MASONRY CONSTRUCTION - LEVEL B

		TYPE	CONTINUOUS	PERIODIC	ACI 530 REFERENCE	ACI 530.1 REFERENCE
1.		VERIFICATION OF SLUMP FLOW AND VSI AS DELIVERED TO THE SITE FOR SELF-CONSOLIDATING GROUT	X			1.5B.1.b.3
2.		VERIFICATION OF f'm PRIOR TO CONSTRUCTION EXCEPT WHERE SPECIFICALLY EXEMPTED BY ACI TMS402-16		X		1.4B
3.		VERIFY COMPLIANCE WITH THE REVIEWED SUBMITTALS AND THE REQUIRED INSPECTION PROVISIONS OF THE CONSTRUCTION DOCUMENTS.		X		1.5
4.		AS MASONRY CONSTRUCTION BEGINS, THE FOLLOWING SHALL BE VERIFIED TO ENSURE COMPLIANCE:				
	A.	PROPORTIONS OF SITE-PREPARED MORTAR		X		2.1, 2.6A
	B.	CONSTRUCTION OF MORTAR JOINTS		X		3.3B
	C.	LOCATION OF REINFORCEMENT AND CONNECTORS		X		3.4, 3.6A
5.		PRIOR TO GROUTING, VERIFY THE FOLLOWING TO ENSURE COMPLIANCE:				
	A.	GROUT SPACE		X		3.2D, 3.2F
	B.	GRADE, TYPE, AND SIZE OF REINFORCEMENT AND ANCHOR BOLTS		X	1.16	2.4, 3.4
	C.	PLACEMENT OF REINFORCEMENT AND CONNECTOR		X	1.16	3.2E, 3.4, 3.6A
	D.	PROPORTIONS OF SITE-PREPARED GROUT		X		2.6B, 2.4G.1.b
	E.	CONSTRUCTION OF MORTAR JOINTS		X		3.3B
6.		VERIFY DURING CONSTRUCTION:				
	A.	SIZE AND LOCATION OF STRUCTURAL ELEMENTS		X		3.3F
	B.	TYPE, SIZE AND LOCATION OF ANCHORS, INCLUDING OTHER DETAILS OF ANCHORAGE OF MASONRY TO STRUCTURAL MEMBERS, FRAMES OR OTHER CONSTRUCTION.		X	1.16.4.3, 1.17.1	
	C.	WELDING OF REINFORCING BARS	X		2.1.7.7.2, 3.3.3.4.C, 8.3.3.4.B	
	D.	PREPARATION, CONSTRUCTION AND PROTECTION OF MASONRY DURING COLD WEATHER (TEMPERATURE BELOW 40 DEG F) OR HOT WEATHER (TEMPERATURE ABOVE 90 DEG F)		X		1.8C, 1.8D
	E.	PLACEMENT OF GROUT IS IN COMPLIANCE	X			3.5, 3.6C
7.		PREPARATION OF ANY REQUIRED GROUT SPECIMENS, MORTAR SPECIMENS, AND/OR PRISMS SHALL BE OBSERVED.		X		1.4B.2.A.3, 1.4B.2.B.3, 1.4B.2.C.3, 1.4B.3, 1.4B.4
		NOTES:				
	1.	QUALIFICATIONS OF WELDERS MUST BE VERIFIED PRIOR TO THE START OF THE WORK.				

DEPARTMENT OF HOMELAND SECURITY

MARK	DESCRIPTION	DATE

DESIGNED BY: Designer
DRAWN BY: Author
CHECKED BY: Checker
SUBMITTED BY:
SIZE: ANSI D
ISSUE DATE: MM-DD-YYYY
SOLICITATION NO.: 70CMSW22Q00000001
CONTRACT NO.: 70Z05018KZFNPL08

US IMMIGRATION AND CUSTOMS ENFORCEMENT (ICE)
9450 KELLER ROAD DRIVE
ORLANDO, FL 32827

KZF DESIGN
700 BROADWAY STREET
CINCINNATI, OH 45202

FT BENNING, GEORGIA
IMMIGRATION & CUSTOMS ENFORCEMENT (ICE)

SPECIAL INSPECTIONS

SHEET ID
MCB
S-004

JAN 06, 2023 - FINAL SUBMITTAL (35%)

NOT FOR CONSTRUCTION

REQUIRED SPECIAL INSPECTIONS OF HOT-ROLLED STRUCTURAL STEEL

		TYPE	FOR EACH LOCATION	PERIODIC	REFERENCED STANDARD	IBC REFERENCE
1.		PRIOR TO WELDING			AISC 360 N5.4	
	A.	WELDING PROCEDURE SPECIFICATIONS (WPS'S) ARE AVAILABLE	X		AWS D1.1 (6.3)	
	B.	MANUFACTURER CERTIFICATIONS FOR CONSUMABLES ARE AVAILABLE	X		AWS D1.1 (6.2)	
	C.	MATERIAL IDENTIFICATION (PROPER TYPE/GRADE OF ALL MATERIALS AND CONSUMABLES)	X		AWS D1.1 (6.2)	
	D.	WELDER IDENTIFICATION SYSTEM	X		AISC 360 N5.4	
	E.	FIT-UP OF GROOVE WELDS		X	AWS D1.1 (5.9, 5.14, 5.17, 5.22, 5.22.1.1, 6.5.2)	
	F.	FIT-UP OF CJP GROOVE WELDS OF HSS T-, Y- AND K- JOINTS W/O BACKING		X	AWS D1.1 (9.11.2)	
	G.	CONFIGURATION AND FINISH OF ACCESS HOLES		X	AWS D1.1 (5.16, 6.5.2)	
	H.	FIT-UP OF FILLET WELDS		X	AWS D1.1 (5.14, 5.17, 5.21.1)	
	I.	CHECK WELDING EQUIPMENT		X	AWS D1.1 (5.10, 6.2)	
2.		DURING WELDING			AISC 360 N5.4	
	A.	USE OF QUALIFIED WELDERS		X	AWS D1.1 (6.4)	
	B.	CONTROL AND HANDLING OF WELDING CONSUMABLES (PACKAGING; EXPOSURE CONTROL)		X	AWS D1.1 (5.3, 6.2)	
	C.	NO WELDING OVER CRACKED TACK WELDS		X	AWS D1.1 (5.17)	
	D.	ENVIRONMENTAL CONDITIONS: WIND SPEED, PRECIPITATION, AND TEMPERATURE WITHIN LIMITS		X	AWS D1.1 (5.11.1, 5.11.2)	
	E.	WELDING PROCEDURE SPECIFICATIONS (WPS) ARE FOLLOWED (SETTINGS ON WELDING EQUIPMENT; TRAVEL SPEED; SELECTED WELDING MATERIALS; SHIELDING GAS TYPE/FLOW RATE; PREHEAT APPLIED; INTERPASS TEMPERATURE MAINTAINED, MIN AND MAX; PROPER POSITION, F/V/H/OH)		X	AWS D1.1 (5.5, 5.6, 5.7, 5.20, 6.3.3, 6.5.2)	
	F.	WELDING TECHNIQUES (INTERPASS AND FINAL CLEANING; EACH PASS WITHIN PROFILE LIMITATIONS AND MEETS QUALITY REQUIREMENTS)		X	AWS D1.1 (5.23, 5.29.1, 6.5.2, 6.5.3)	
3.		AFTER WELDING			AISC 360 N5.4	
	A.	WELDS CLEANED		X	AWS D.1.1 (5.29.1)	
	B.	SIZE, LENGTH, AND LOCATION OF WELDS	X		AWS D1.1 (6.5.1)	
	C.	WELDS MEET VISUAL ACCEPTANCE CRITERIA (CRACK PROHIBITION; WELD/BASE METAL FUSION; CRATER CROSS SECTION; WELD PROFILES; WELD SIZE; UNDERCUT; POROSITY)	X		AWS D1.1 (6.1, 6.5.3)	
	D.	ARC STRIKES	X		AWS D1.1 (5.28)	
	E.	K-AREA: VISUALLY INSPECT FOR CRACKING IN WEB WITHIN 3" OF WELDS LOCATED IN K-AREA.	X		AISC 360 N5.4	
	F.	WELD ACCESS HOLES IN ROLLED HEAVY SHAPES AND BUILD-UP HEAVY SHAPES	X		AWS D1.1 (5.16, 6.5.2)	
	G.	BACKING AND WELD TABS REMOVED IF REQUIRED	X		AWS D1.1 (5.9, 5.30)	
	H.	REPAIR ACTIVITIES	X		AWS D1.1 (5.25, 6.5.3)	
	I.	DOCUMENT ACCEPTANCE OR REJECTION OF WELDED JOINT OR MEMBER	X		AWS D1.1 (6.5.4, 6.5.5)	
4.		NON-DESTRUCTIVE TESTING			AISC 360 N5.5	
	A.	CJP GROOVE WELDS: ULTRASONIC TESTING [[RISK CATEGORY III-IV]]	X		AWS D1.1, AISC 360 N5.5b	
	B.	CJP GROOVE WELDS: PROVIDE ULTRASONIC TESTING OF 10% OF WELDS [[RISK CATEGORY II]]	X		AWS D1.1, AISC 360 N5.5b,f	
	C.	WELDED JOINTS SUBJECTED TO FATIGUE LOADING	X		AISC 360 N5.5d	
5.		BEFORE HIGH-STRENGTH BOLTING (PRETENSIONED AND SLIP-CRITICAL)				
		THIS INSPECTION DOES NOT APPLY TO SNUG-TIGHT JOINTS				
	A.	MANUFACTURER CERTIFICATION FOR FASTENERS IS AVAILABLE	X		AISC 360 N5.6	
	B.	FASTENERS MARKED IN ACCORDANCE WITH ASTM REQUIREMENTS.		X	AISC 360 N5.6	
	C.	CORRECT FASTENERS SELECTED FOR THE JOINT DETAIL (GRADE, TYPE, JOIST LENGTH IF THREADS ARE TO BE EXCLUDED FROM SHEAR PLANE.		X	AISC 360 N5.6	
	D.	CORRECT BOLTING PROCEDURE SELECTED FOR JOINT DETAIL		X	AISC 360 N5.6	
	E.	CONNECTING ELEMENTS, INCLUDING APPROPRIATE FAYING SURFACE CONDITION AND HOLE PREP, MEET REQUIREMENTS		X	AISC 360 N5.6	
	F.	PRE-INSTALLATION VERIFICATION TESTING BY INSTALLATION PERSONNEL OBSERVED AND DOCUMENTED FOR FASTENER ASSEMBLIES AND METHODS USED		X	AISC 360 N5.6	
	G.	PROTECTED STORAGE FOR BOLTS, NUTS, WASHERS, AND OTHER FASTENER COMPONENTS		X	AISC 360 N5.6	
6.		DURING HIGH STRENGTH BOLTING (PRETENSIONED AND SLIP-CRITICAL)				
		THIS INSPECTION DOES NOT APPLY TO SNUG-TIGHT JOINTS				
		THIS INSPECTION MAY BE PERFORMED AFTER-THE-FACT IF CONDITIONS OF AISC N5.6 (2) ARE MET.				
	A.	FASTENER ASSEMBLIES PLACED IN ALL HOLES AND WASHERS (IF REQUIRED) POSITIONED AS REQUIRED		X	AISC 360 N5.6	
	B.	JOINT BROUGHT TO THE SNUG-TIGHT CONDITION PRIOR TO THE PRETENSIONING OPERATION.		X	AISC 360 N5.6	
	C.	FASTENER COMPONENT NOT TURNED BY WRENCH IS PREVENTED FROM ROTATING		X	AISC 360 N5.6	
	D.	FASTENERS ARE PRETENSIONED IN ACCORDANCE WITH A METHOD APPROVED BY RCSC AND PROGRESSING SYSTEMATICALLY FROM MOST RIGID POINT TOWARD FREE EDGES.		X	AISC 360 N5.6	
7.		AFTER HIGH-STRENGTH BOLTING				
	A.	DOCUMENT ACCEPTANCE OR REJECTION OF BOLTED CONNECTION	X		AISC 360 N5.6	
		NOTES:				
		SPECIAL INSPECTORS SHALL COMPLETE ALL TASKS ASSIGNED TO "QUALITY ASSURANCE"/"QA" IN AISC 360 CHAPTER N.				
		SPECIAL INSPECTIONS ARE NOT REQUIRED FOR WORK COMPLETED IN THE SHOP BY AN AISC CERTIFIED FABRICATOR. THIS DOES NOT RELIEVE THE FABRICTOR FROM INSPECTIONS REQUIRED BY THE AISC CERTIFICATION PROGRAM, NOR FROM AISC 360 "QUALITY CONTROL" INSPECTIONS.				1704.2.5
		FOR FULLER EXPLANATION OF WELDING STANDARDS FOR INSPECTION, REFER TO COMMENTARY OF AISC 360.				

REQUIRED SPECIAL INSPECTIONS OF OPEN-WEB STEEL JOISTS AND JOIST GIRDERS

		TYPE	CONTINUOUS	PERIODIC	REFERENCED STANDARD	IBC REFERENCE
1.		INSTALLATION OF OPEN-WEB STEEL JOISTS AND JOIST GIRDERS.				1705.2.3
	A.	END CONNECTIONS - WELDING OR BOLTED		X	SJI SPECIFICATIONS LISTED IN SECTION 2207.1.	
	B.	BRIDGING - HORIZONTAL OR DIAGONAL				
		1. STANDARD BRIDGING		X	SJI SPECIFICATIONS LISTED IN SECTION 2207.1.	
		2. BRIDGING THAT DIFFERS FROM THE SJI SPECIFICATIONS LISTED IN SECTION 2207.1.		X		

REQUIRED SPECIAL INSPECTIONS OF COLD-FORMED STEEL DECK

		TYPE	CONTINUOUS	PERIODIC	REFERENCED STANDARD	IBC REFERENCE
1.		INSPECTION OR EXECUTION TASKS PRIOR TO DECK PLACEMENT.			SD1 QA/QC	1705.2.2
	A	VERIFY COMPLIANCE OF MATERIALS (DECK AND ALL DECK ACCESSORIES) WITH CONSTRUCTION DOCUMENTS, INCLUDING PROFILES, MATERIAL PROPERTIES, AND BASE METAL THICKNESS		X		
	B	DOCUMENT ACCEPTANCE OR REJECTION OF DECK AND DECK ACCESSORIES.		X		
2.		INSPECTION OR EXECUTION TASKS AFTER DECK PLACEMENT			SD1 QA/QC	1705.2.2
	A	VERIFY COMPLIANCE OF DECK AND ALL DECK ACCESSORIES INSTALLATION WITH CONSTRUCTION DOCUMENTS.		X		
	B	VERIFY DECK MATERIALS ARE REPRESENTED BY THE MILL CERTIFICATIONS THAT COMPLY WITH THE CONSTRUCTION DOCUMENTS.		X		
	C	DOCUMENT ACCEPTANCE OR REJECTION OF INSTALLATION OF DECK AND DECK ACCESSORIES.		X		
3.		INSPECTION OR EXECUTION TASKS PRIOR TO WELDING.			SD1 QA/QC	1705.2.2
	A	WELDING PROCEDURE SPECIFICATIONS (WPS) AVAILABLE.		X		
	B	MANUFACTURER CERTIFICATIONS FOR WELDING CONSUMABLE AVAILABLE.		X		
	C	MATERIAL IDENTIFICATION (TYPE/GRADE).		X		
	D	CHECK WELDING EQUIPMENT..		X		
4.		INSPECTION OR EXECUTION TASKS DURING WELDING.			SD1 QA/QC	1705.2.2
	A	USE OF QUALIFIED WELDERS.		X		
	B	CONTROL AND HANDLING OF WELDING CONSUMABLES.		X		
	C	ENVIRONMENTAL CONDITIONS (WIND SPEED, MOISTURE, TEMPERATURE).		X		
	D	WPS FOLLOWED.		X		
5.		INSPECTION OR EXECUTION TASKS AFTER WELDING.			SD1 QA/QC	1705.2.2
	A	VERIFY SIZE AND LOCATION OF WELDS, INCLUDING SUPPORT, SIDELAP, AND PERIMETER WELDS.		X		
	B	WELDS MEET VISUAL ACCEPTANCE CRITERIA.		X		
	C	VERIFY REPAIR ACTIVITIES.		X		
	D	DOCUMENT ACCEPTANCE OR REJECTION OF WELDS.		X		
6.		INSPECTION OR EXECUTION TASKS PRIOR TO MECHANICAL FASTENING.			SD1 QA/QC	1705.2.2
	A	MANUFACTURER INSTALLATION INSTRUCTIONS AVAILABLE FOR MECHANICAL FASTENERS.		X		
	B	PROPER TOOLS AVAILABLE FOR FASTENER INSTALLATION.		X		
	C	PROPER STORAGE FOR MECHANICAL FASTENERS.		X		
7.		INSPECTION OR EXECUTION TASKS DURING MECHANICAL FASTENING.			SD1 QA/QC	1705.2.2
	A	FASTENERS ARE POSITIONED AS REQUIRED.		X		
	B	FASTENERS ARE INSTALLED IN ACCORDANCE WITH MANUFACTURER'S INSTRUCTIONS.		X		
8.		INSPECTION OR EXECUTION TASKS AFTER MECHANICAL FASTENING.			SD1 QA/QC	1705.2.2
	A	CHECK SPACING, TYPE, AND INSTALLATION OF SUPPORT FASTENERS.		X		
	B	CHECK SPACING, TYPE, AND INSTALLATION OF SIDELAP FASTENERS.		X		
	C	CHECK SPACING, TYPE, AND INSTALLATION OF PERIMETER FASTENERS.		X		
	D	VERIFY REPAIR ACTIVITIES.		X		
	E	DOCUMENT ACCEPTANCE OR REJECTION OF MECHANICAL FASTENERS.		X		

DATE
DESCRIPTION
MARK

ISSUE DATE: MM-DD-YYYY
SOLICITATION NO.: 70CMSW22Q00000001
CONTRACT NO.: 70Z05018KZFNPL08

DESIGNED BY: Designer
DRAWN BY: Author
CHECKED BY: Checker
SUBMITTED BY:
SIZE: ANSI D

US IMMIGRATION AND CUSTOMS ENFORCEMENT (ICE)
9400 EXCELSIOR BLVD, SUITE
ORLANDO, FL 32827

KZF DESIGN
700 BROADWAY ST
CINCINNATI, OH 45202

FT BENNING, GEORGIA
IMMIGRATION & CUSTOMS ENFORCEMENT (ICE)

SPECIAL INSPECTIONS

SHEET ID
MCB
S-005

JAN 06, 2023 - FINAL SUBMITTAL (35%)

NOT FOR CONSTRUCTION

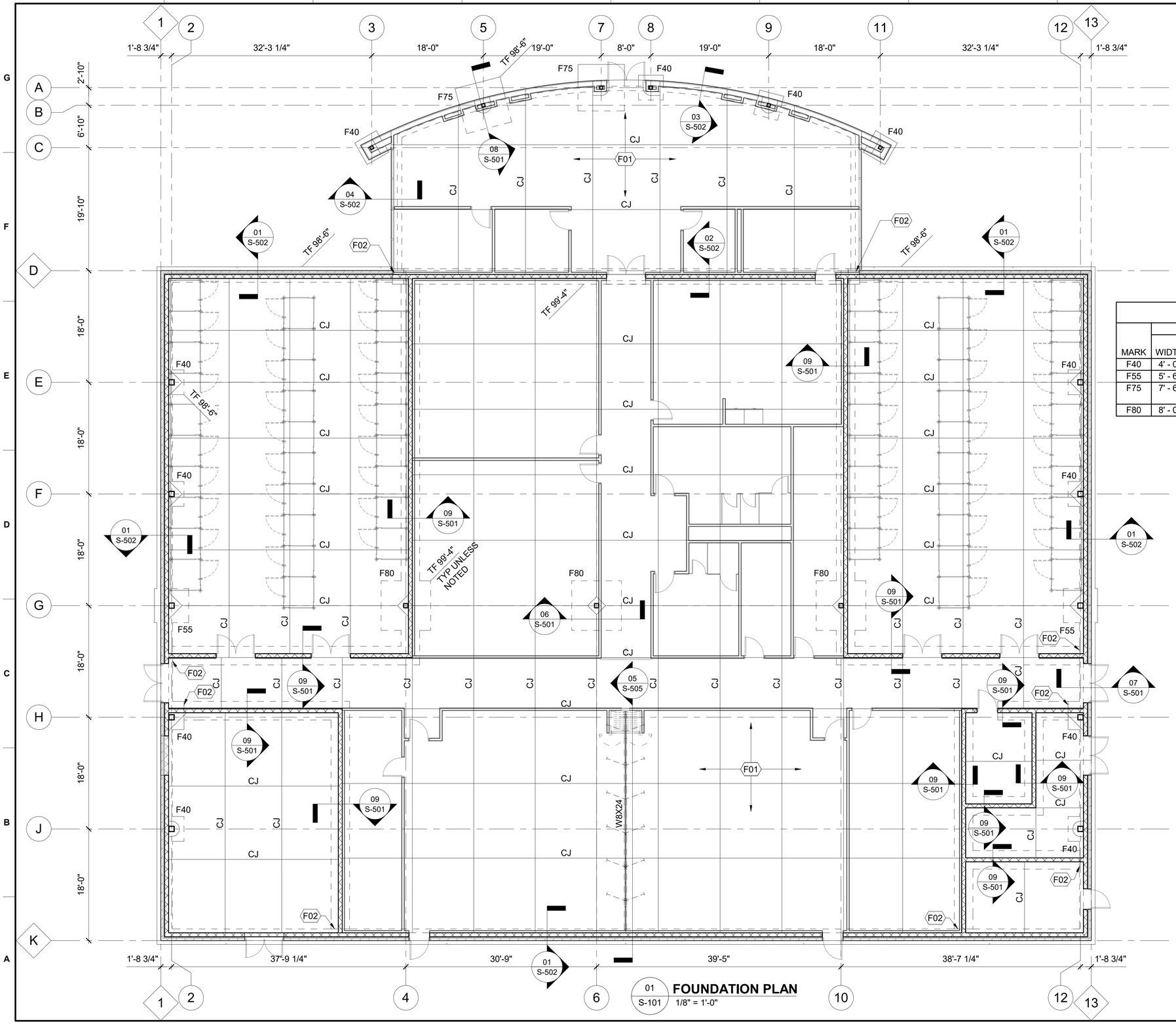

01 S-101 **FOUNDATION PLAN**
1/8" = 1'-0"

GENERAL NOTES

A. REFER TO ARCHITECTURAL DRAWINGS FOR WALL DIMENSIONS NOT SHOWN.

B. REFER TO SHEETS S-001 THRU S-005 FOR GENERAL NOTES, SPECIAL INSPECTIONS, AND LOADING DIAGRAM.

C. REFER TO SHEET S-501 ANS S-502 FOR TYPICAL CONCRETE AND FOUNDATION DETAILS.

DRAWING NOTES

F01 5" THICK CONCRETE SLAB REINFORCED WITH 6X6X-W2.1XW2.1 W.W.F. OVER 10 MIL VAPOR BARRIER OVER 4" MINIMUM COMPACTED GRANULAR FILL. TOP OF SLAB CALLED EL 100'-0"

F02 FOOTING STEP. REFER TO DETAIL 05/S-502

COLUMN FOOTING SCHEDULE

MARK	DIMENSIONS			REINFORCING				REMARKS
				TRANSVERSE		LONGITUDINAL		
	WIDTH	LENGTH	DEPTH	QUANTITY	SIZE	QUANTITY	SIZE	
F40	4' - 0"	4' - 0"	1' - 0"	4	#4	4	#4	
F55	5' - 6"	5' - 6"	1' - 0"	5	#5	5	#5	
F75	7' - 6"	7' - 6"	1' - 2"	8	#5	8	#5	TOP & BOTTOM
F80	8' - 0"	8' - 0"	1' - 2"	7	#5	7	#5	

N

0 4' 8' 16'
SCALE: 1/8"=1'-0"

MARK	DESCRIPTION	DATE

ISSUE DATE: MM-DD-YYYY
SOLICITATION NO.: 70CMSW22Q00000001
CONTRACT NO.: 70Z05018DKZFNPL08

DESIGNED BY: Designer
DRAWN BY: Author
CHECKED BY: Checker
SUBMITTED BY: HUTZEL
SIZE: ANSI D

US IMMIGRATION AND CUSTOMS ENFORCEMENT (ICE)
9495 DELEGATED DRIVE
ORLANDO, FL 32837

KZF DESIGN
700 BROADWAY STREET
CINCINNATI, OH 45202

FT BENNING, GEORGIA
IMMIGRATION & CUSTOMS ENFORCEMENT (ICE)

FOUNDATION PLAN

SHEET ID
MCB
S-101

JAN 06, 2023 - FINAL SUBMITTAL (35%)

NOT FOR CONSTRUCTION

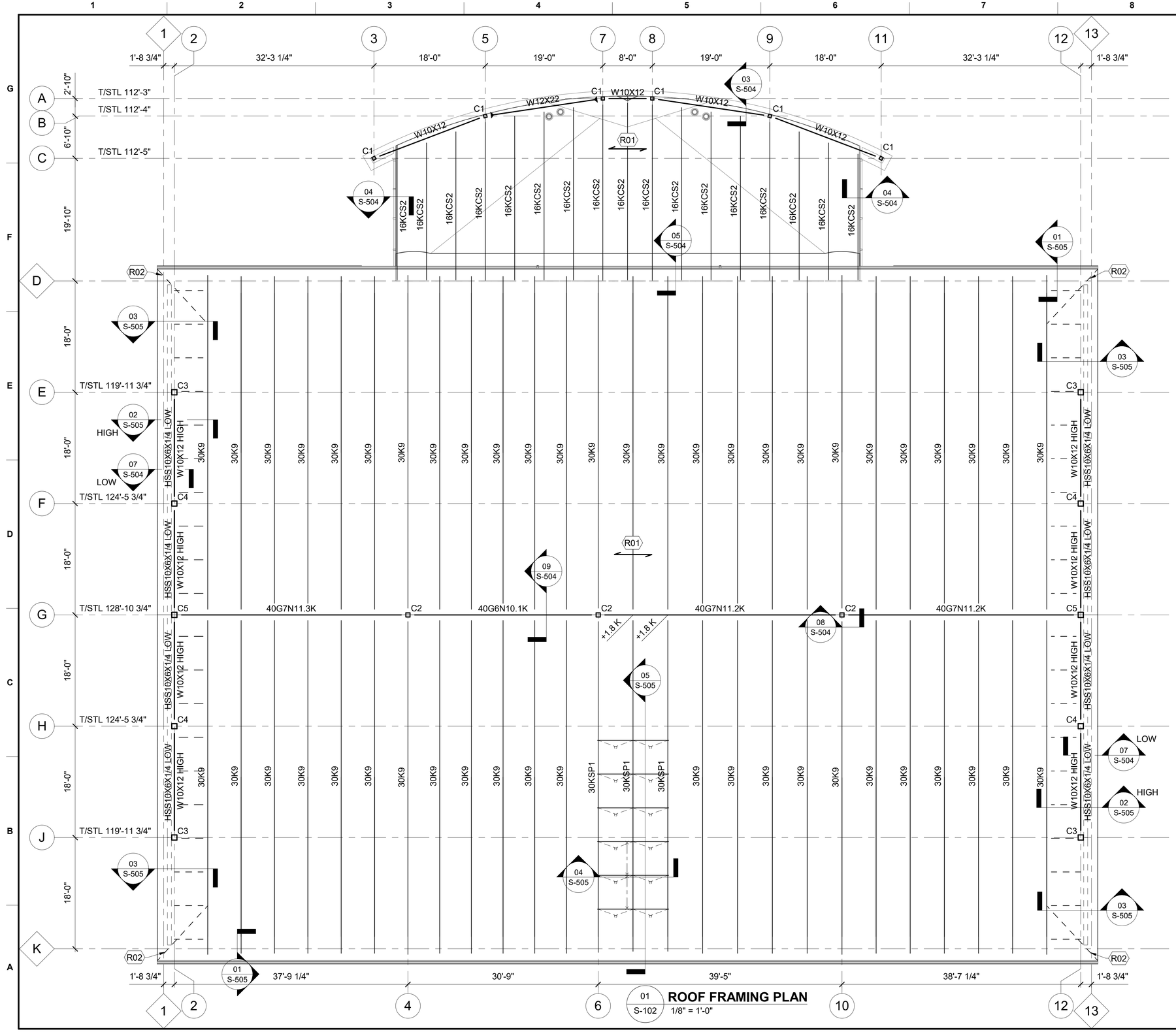

01 S-102 **ROOF FRAMING PLAN**
1/8" = 1'-0"

GENERAL NOTES

A. REFER TO ARCHITECTURAL DRAWINGS FOR WALL DIMENSIONS NOT SHOWN.

B. REFER TO SHEETS S-001 THRU S-005 FOR GENERAL NOTES, SPECIAL INSPECTIONS, AND LOADING DIAGRAM.

C. REFER TO SHEETS S-503, S-504, AND S-505 FOR TYPICAL FRAMING DETAILS.

⬡ DRAWING NOTES

R01 INDICATES SPAN DIRECTION OF 1 1/2" DEEP X 22 GAUGE, TYPE B WIDE RIB ROOF DECK.

R02 HSS2 1/2X2 1/2X1/4 WELDED SOLID.

LEGEND

T/STL TOP OF STEEL ELEVATION (DECK BEARING)

---◄ INDICATES MOMENT CONNECTION. REFER TO DETAIL 06 / S-504 FOR BEAM TO COLUMN

COLUMN SCHEDULE

MARK	SIZE
C1	HSS6X6X3/16
C2	HSS8X8X1/4
C3	HSS10X10X5/16
C4	HSS10X10X1/2
C5	HSS10X10X5/8

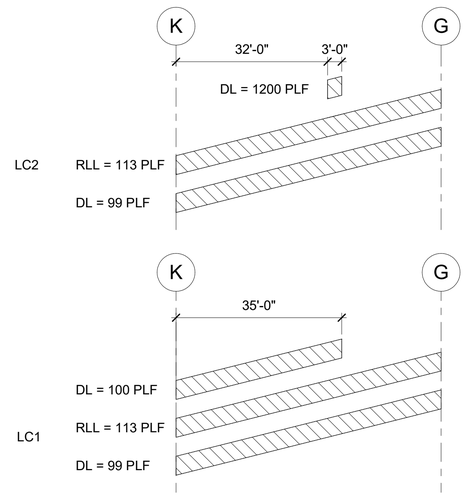

JOIST LOADING DIAGRAM (30KSP1)

SCALE: 1/8"=1'-0"

NOT FOR CONSTRUCTION

U.S. DEPARTMENT OF HOMELAND SECURITY

MARK	DESCRIPTION	DATE

DESIGNED BY: Designer
DRAWN BY: Author
CHECKED BY: Checker
ISSUE DATE: MM-DD-YYYY
SOLICITATION NO.: 70CMSW22Q00000001
CONTRACT NO.: 70Z05018KZFNPL08
SUBMITTED BY: HUTZEL
SIZE: ANSI D

US IMMIGRATION AND CUSTOMS ENFORCEMENT (ICE)
9455 EXCELSIOR BLVD
ORLANDO, FL 32837

KZF DESIGN
700 BROADWAY STREET
CINCINNATI, OH 45202

FT BENNING, GEORGIA
IMMIGRATION & CUSTOMS ENFORCEMENT (ICE)

ROOF FRAMING PLAN

SHEET ID
MCB
S-102

JAN 06, 2023 - FINAL SUBMITTAL (35%)

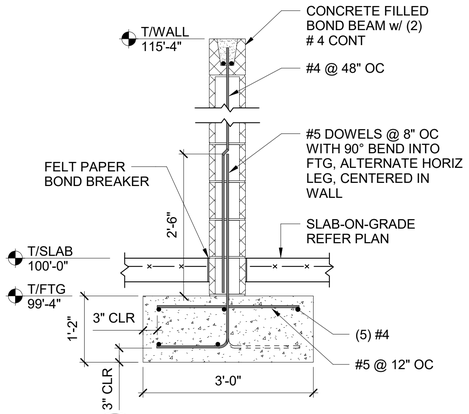

09 S-501 **INTERIOR CMU WALL** NTS

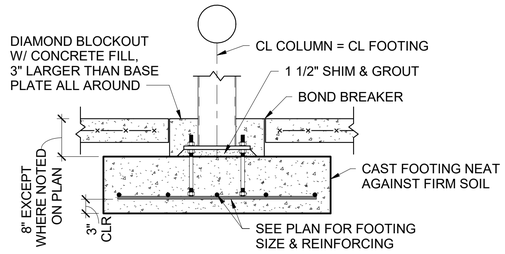

06 S-501 **TYPICAL INTERIOR FOOTING** NTS

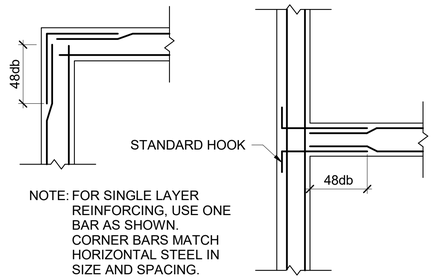

03 S-501 **CORNER REINFORCING (FOOTINGS, WALLS, AND CMU BOND BEAMS)** NTS

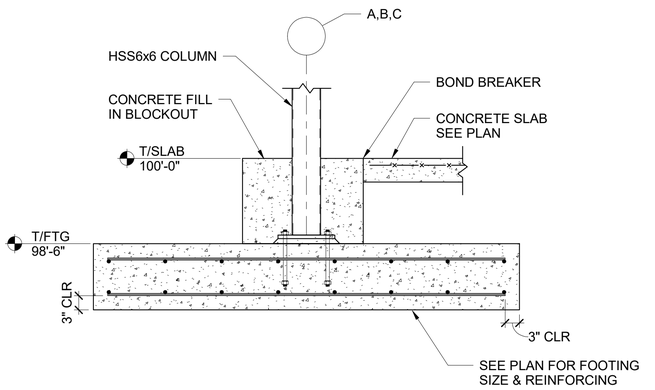

08 S-501 **SECTION THRU PEDESTAL** NTS

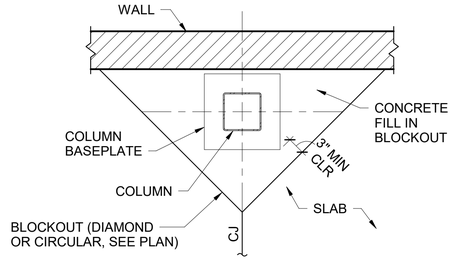

05 S-501 **TYPICAL PERIMETER SLAB/COLUMN BLOCKOUT** NTS

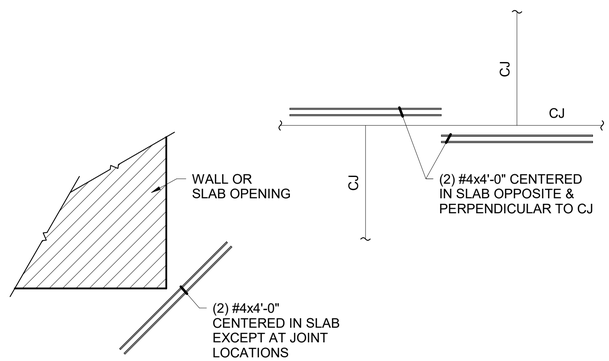

02 S-501 **TYPICAL SLAB CORNER AND JOINT ENDS REINFORCING** NTS

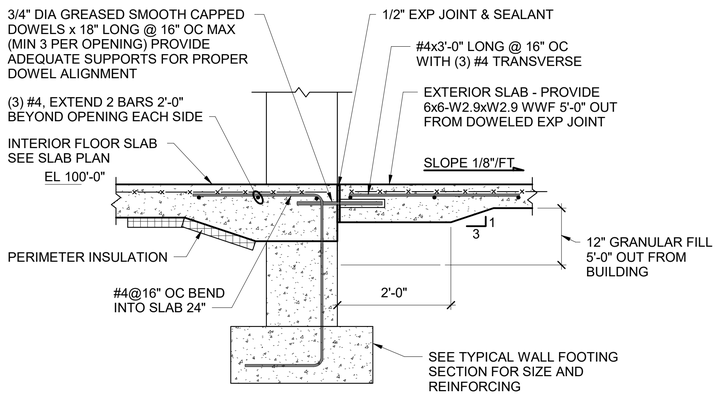

07 S-501 **TYPICAL EXTERIOR MANDOOR** NTS

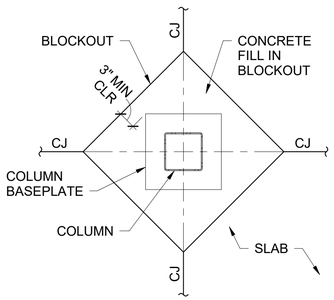

04 S-501 **TYPICAL INTERIOR SLAB/COLUMN BLOCKOUT** NTS

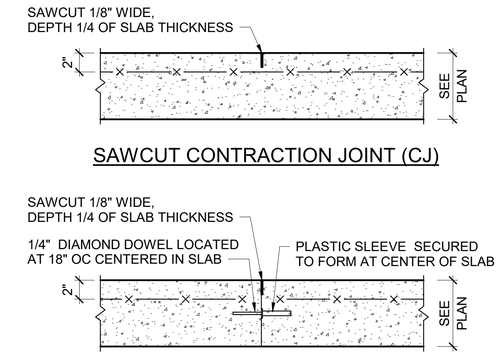

01 S-501 **TYPICAL SLAB JOINTS** NTS

MARK	DESCRIPTION	DATE

ISSUE DATE: MM-DD-YYYY
SOLICITATION NO.: 70CMSW22Q00000001
CONTRACT NO.: 70Z05018DKZFNPL08

DESIGNED BY: Designer
DRAWN BY: Author
CHECKED BY: Checker
SUBMITTED BY: HUTZEL
SIZE: ANSI D

US IMMIGRATION AND CUSTOMS ENFORCEMENT (ICE)
9454 ELLIS ROAD EAST DRIVE
ORLANDO, FL 32837

KZF DESIGN
700 BROADWAY STREET
CINCINNATI, OH 45202

FT BENNING, GEORGIA
IMMIGRATION & CUSTOMS ENFORCEMENT (ICE)

SECTIONS AND DETAILS

SHEET ID
MCB
S-501

JAN 06, 2023 - FINAL SUBMITTAL (35%)

NOT FOR CONSTRUCTION

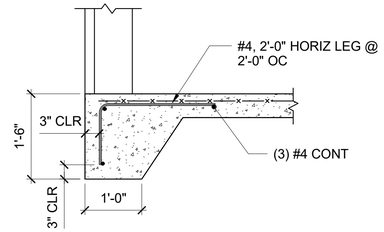

03 S-502 **TURN DOWN SLAB**
NTS

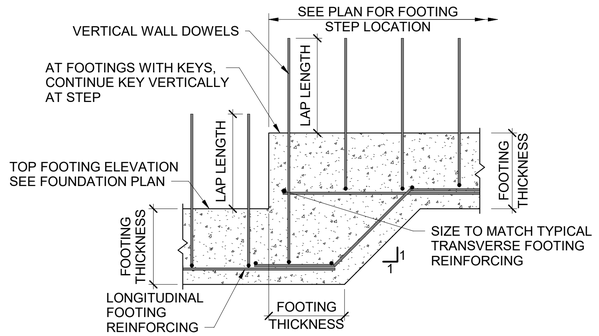

05 S-502 **FOOTING STEP WITH VERTICAL REINFORCEMENT**
NTS

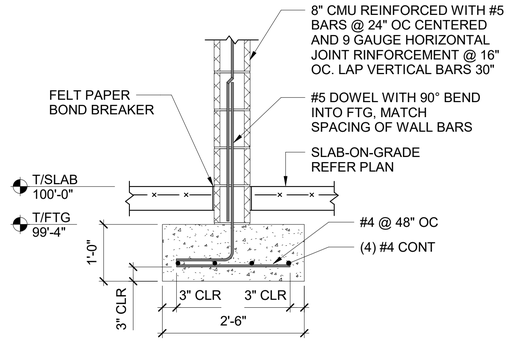

02 S-502 **PERIMETER WALL FOOTING**
NTS

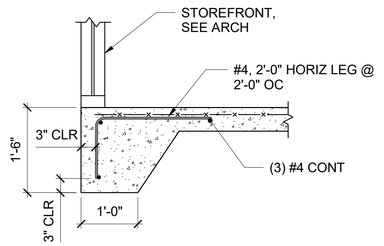

04 S-502 **TURN DOWN SLAB AT STOREFRONT**
NTS

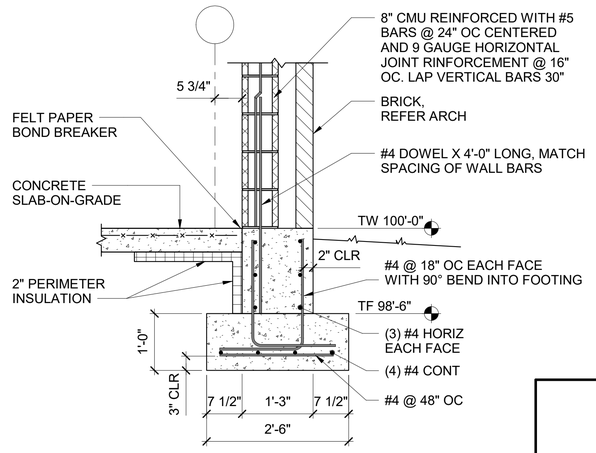

01 S-502 **PERIMETER WALL FOOTING**
NTS

MARK	DESCRIPTION	DATE

ISSUE DATE: MM-DD-YYYY
SOLICITATION NO.: 70CMSW22Q00000001
CONTRACT NO.: 70Z05018DKZFNPL08

DESIGNED BY: Designer
DRAWN BY: Author
CHECKED BY: Checker
SUBMITTED BY: HUTZEL
SIZE: ANSI D

US IMMIGRATION AND CUSTOMS ENFORCEMENT (ICE)
9495 DELEGATED DRIVE
ORLANDO, FL 32837

KZF DESIGN
700 BROADWAY STREET
CINCINNATI, OH 45202

FT BENNING, GEORGIA
IMMIGRATION & CUSTOMS ENFORCEMENT (ICE)

SECTIONS AND DETAILS

SHEET ID
MCB
S-502

JAN 06, 2023 - FINAL SUBMITTAL (35%)

NOT FOR CONSTRUCTION

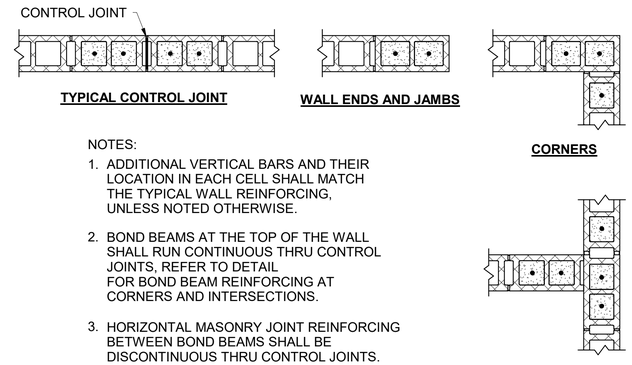

NOTES:

1. ADDITIONAL VERTICAL BARS AND THEIR LOCATION IN EACH CELL SHALL MATCH THE TYPICAL WALL REINFORCING, UNLESS NOTED OTHERWISE.
2. BOND BEAMS AT THE TOP OF THE WALL SHALL RUN CONTINUOUS THRU CONTROL JOINTS, REFER TO DETAIL FOR BOND BEAM REINFORCING AT CORNERS AND INTERSECTIONS.
3. HORIZONTAL MASONRY JOINT REINFORCING BETWEEN BOND BEAMS SHALL BE DISCONTINUOUS THRU CONTROL JOINTS.
4. REFER ARCHITECTURAL FOR ADDITIONAL NOTES.

02 / S-503 **TYPICAL CMU REINFORCING**
NTS

MASONRY LINTEL SCHEDULE

LINTEL DESIGNATION	LINTEL TYPE (NOMINAL DIMENSIONS)	MASONRY OPENING MAXIMUM SPAN (FT) UNLESS NOTED OTHERWISE	MINIMUM END BEARING (INCHES)
ML1	8" HIGH BOND BEAM	4'-0"	8
ML2	16" HIGH BOND BEAM	7'-0"	8

NOTE: HORIZONTAL BOND BREAK BELOW LINTEL BEARING AT VERTICAL CONTROL JOINTS LOCATED AT LINTEL ENDS.

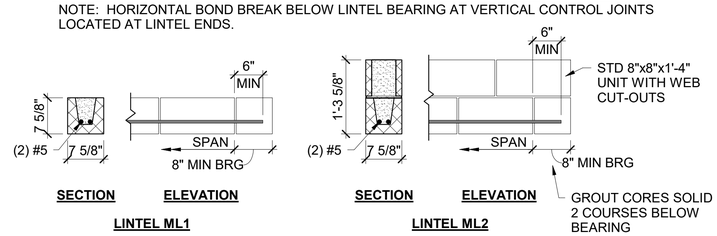

01 / S-503 **TYPICAL CMU LINTELS**
NTS

STEEL ANGLE LINTEL SCHEDULE (BRICK SUPPORT)

LINTEL DESIGNATION	STEEL ANGLE SIZE	MASONRY OPENING MAXIMUM SPAN (FT)	MINIMUM END BEARING (INCHES)
SL1	L3 1/2x3 1/2x 1/4	4'-0"	8
SL2	L5x3 1/2x 1/2	7'-0"	8

LINTEL NOTES:

1. ALL LINTELS EXPOSED TO EXTERIOR SHALL BE HOT DIPPED GALVANIZED.
2. THE ANGLE LINTELS FIRST LEG SIZE GIVEN ABOVE SHALL BE THE VERTICAL LEG.
3. UNLESS OTHERWISE SHOWN, SELECT LINTEL TO SUIT INDICATED MASONRY OPENING AT OR BELOW MAXIMUM ALLOWABLE SPAN INDICATED. LINTEL TYPE IS AT CONTRACTOR'S OPTION EXCEPT AS NOTED OR DETAILED.
4. LINTELS ML2 MAY BE CONSTRUCTED OF A SINGLE 16" HIGH BOND BEAM UNIT IN UNEXPOSED AREAS.
5. PROVIDE LINTELS @ ALL MECHANICAL PENETRATIONS OF INTERIOR MASONRY WALLS. COORDINATE SIZE & LOCATION OF OPENINGS WITH APPROPRIATE TRADE.
6. REFER TO ARCHITECTURAL DRAWINGS FOR OPENING SIZES.

MARK	DESCRIPTION	DATE

ISSUE DATE: MM-DD-YYYY
SOLICITATION NO.: 70CMSW22Q00000001
CONTRACT NO.: 70Z05018DKZFNPL08
DESIGNED BY: Designer
DRAWN BY: Author
CHECKED BY: Checker
SUBMITTED BY: HUTZEL
SIZE: ANSI D

US IMMIGRATION AND CUSTOMS ENFORCEMENT (ICE)
9495 DELEGATED DRIVE
ORLANDO, FL 32837

KZF DESIGN
700 BROADWAY STREET
CINCINNATI, OH 45202

FT BENNING, GEORGIA
IMMIGRATION & CUSTOMS ENFORCEMENT (ICE)

SECTIONS AND DETAILS

SHEET ID
MCB
S-503

JAN 06, 2023 - FINAL SUBMITTAL (35%)

NOT FOR CONSTRUCTION

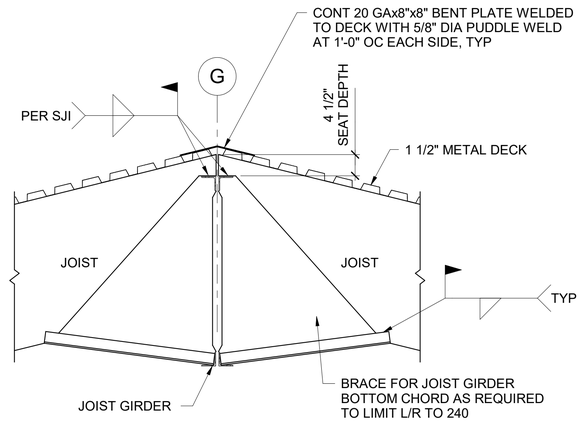

09 S-504 **JOISTS BEARING ON JOIST GIRDER**
NTS

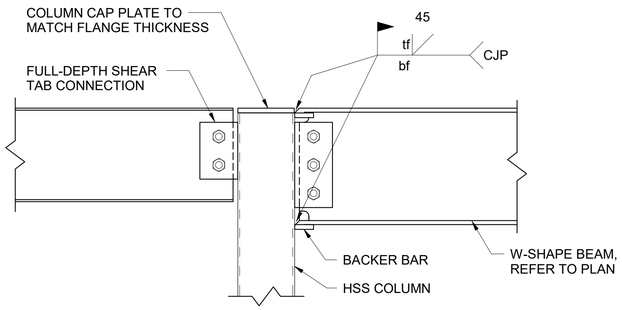

06 S-504 **BEAM TO COLUMN MOMENT CONNECTION**
NTS

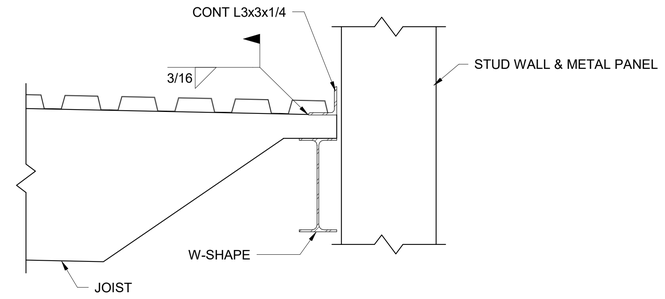

03 S-504 **LOW ROOF JOIST BEARING ON BEAM**
NTS

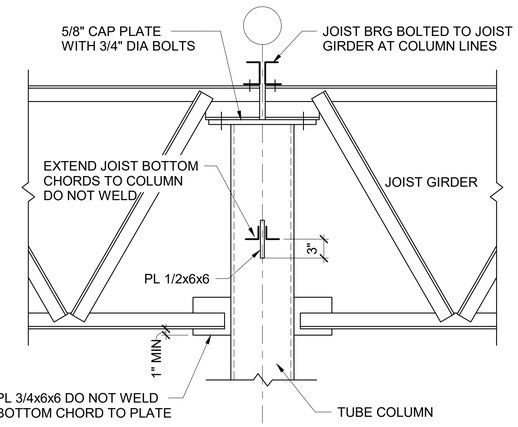

08 S-504 **JOIST GIRDER BEARING ON COLUMN**
NTS

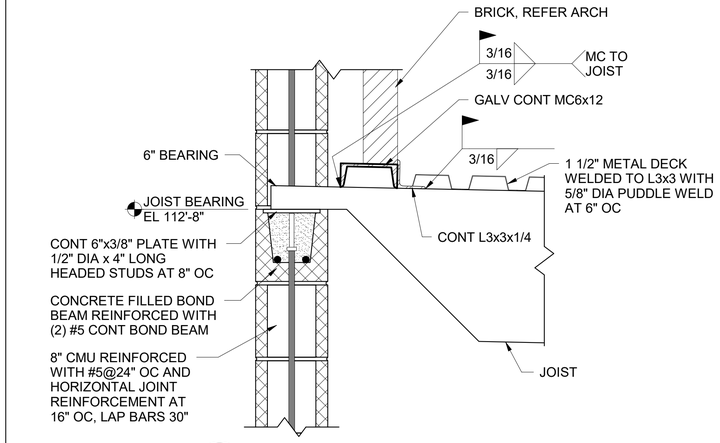

05 S-504 **LOW ROOF JOST BEARING ON CMU**
NTS

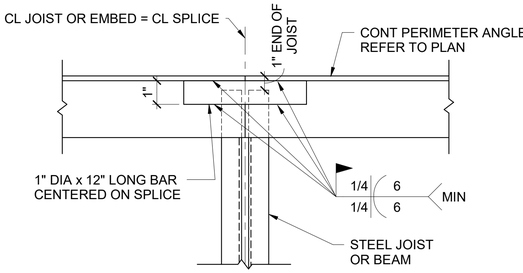

PLAN

02 S-504 **CONTINUOUS PERIMETER ANGLE SPLICE**
NTS

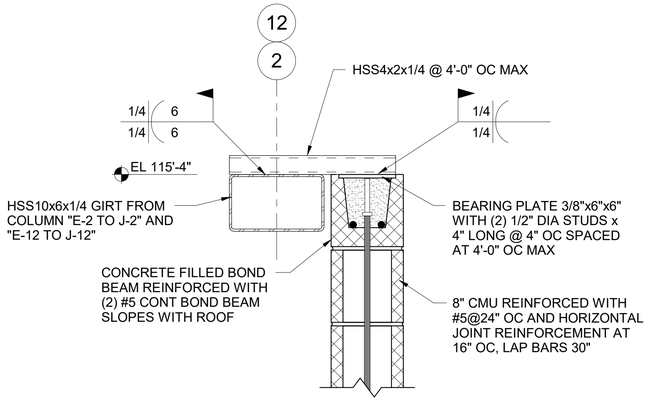

07 S-504 **SIDEWALL GIRT DETAIL**
NTS

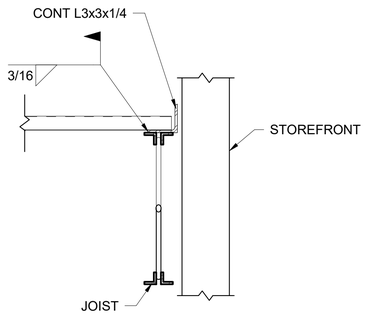

04 S-504 **LOW ROOF BEAM PARALLEL TO STOREFRONT**
NTS

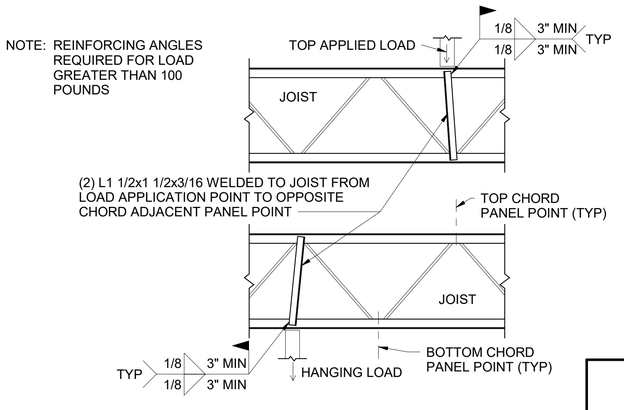

01 S-504 **JOIST REINFORCING FOR CONCENTRATED LOADS**
NTS

MARK	DESCRIPTION	DATE

DESIGNED BY: Designer
DRAWN BY: Author
CHECKED BY: Checker
ISSUE DATE: MM-DD-YYYY
SOLICITATION NO.: 70CMSW22Q00000001
CONTRACT NO.: 70Z05018KZFNPL08
SUBMITTED BY: HUTZEL
SIZE: ANSI D

US IMMIGRATION AND CUSTOMS ENFORCEMENT (ICE)
9485 ESS FED DRIVE
ORLANDO, FL 32837

KZF DESIGN
700 BROADWAY STREET
CINCINNATI, OH 45202

FT BENNING, GEORGIA
IMMIGRATION & CUSTOMS ENFORCEMENT (ICE)

SECTIONS AND DETAILS

SHEET ID
MCB
S-504

JAN 06, 2023 - FINAL SUBMITTAL (35%)

NOT FOR CONSTRUCTION

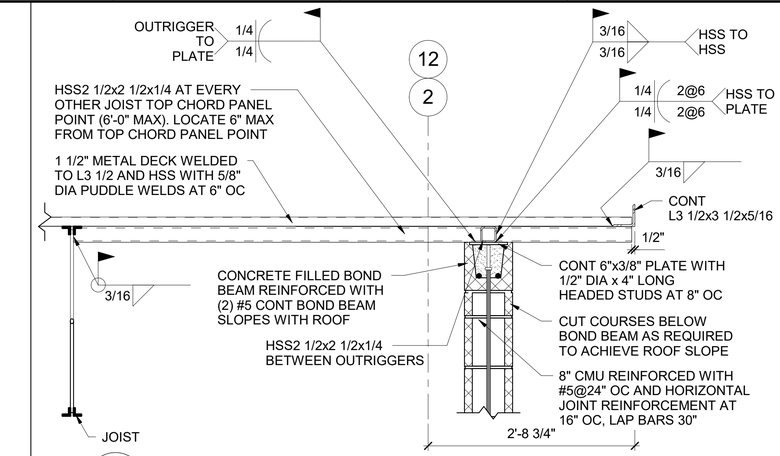

03 S-505 **ROOF DETAIL AT SIDEWALL LINES "E TO D" AND "J TO K"**

NTS

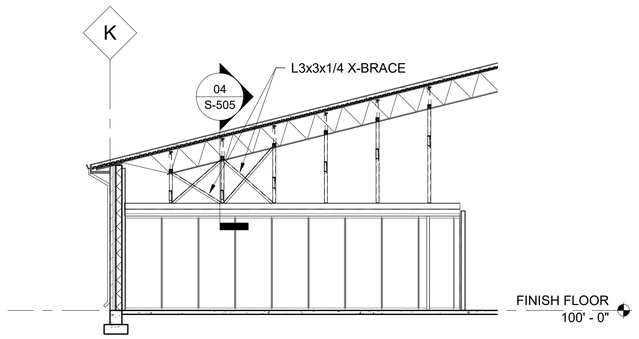

05 S-505 **FOLDING PARTITION SUPPORT**

NTS

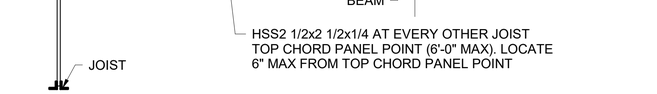

02 S-505 **ROOF EDGE DETAIL**

NTS

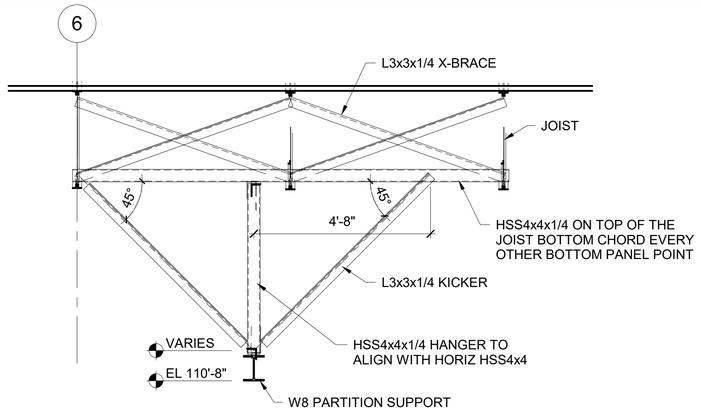

04 S-505 **FOLDING PARTITION SUPPORT**

NTS

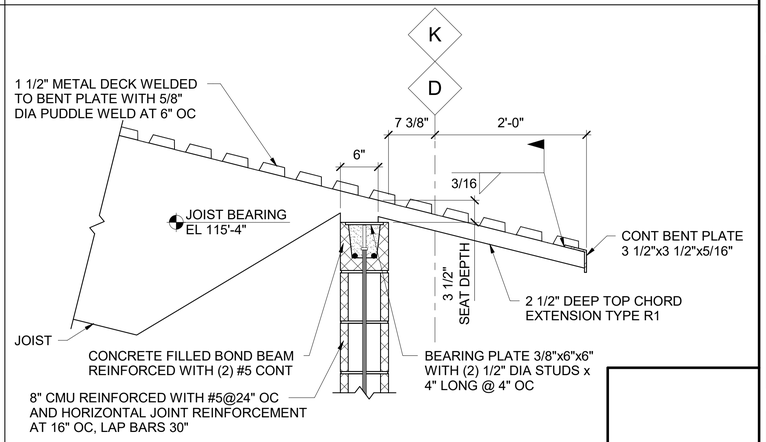

01 S-505 **HIGH ROOF JOIST BEARING ON CMU**

NTS

MARK	DESCRIPTION	DATE

DESIGNED BY: Designer
DRAWN BY: Author
CHECKED BY: Checker
SUBMITTED BY:
SIZE: ANSI D
ISSUE DATE: MM-DD-YYYY
SOLICITATION NO.: 70CMSW22Q00000001
CONTRACT NO.: 70Z05018KZFNPL08

US IMMIGRATION AND CUSTOMS ENFORCEMENT (ICE)
9455 BEE CAVE ROAD
ORLANDO, FL 32837

KZF DESIGN
709 RODA WAY STREET
CINCINNATI, OH 45202

FT BENNING, GEORGIA
IMMIGRATION & CUSTOMS ENFORCEMENT (ICE)

SECTIONS AND DETAILS

SHEET ID
MCB
S-505

JAN 06, 2023 - FINAL SUBMITTAL (35%)

NOT FOR CONSTRUCTION

DRAWING ABBREVIATIONS

AB	ANCHOR BOLT
ABV	ABOVE
AC	ACOUSTICAL / AIR CONDITIONING
ACT	ACOUSTICAL CEILING TILE
AD	AREA DRAIN
ADA	AMERICANS WITH DISABILITIES ACT
ADDL	ADDITIONAL
ADJ	ADJUSTABLE
ADJT	ADJACENT
A/E	ARCHITECT/ENGINEER
AFF	ABOVE FINISHED FLOOR
AFG	ABOVE FINISHED GRADE
AFS	ABOVE FINISHED SLAB
AGG	AGGREGATE
AHU	AIR HANDLING UNIT
AIB	AIR INFILTRATION BARRIER
ALT	ALTERNATE
ALUM	ALUMINUM
ANOD	ANODIZE
APPROX	APPROXIMATE
ARCH	ARCHITECT
AUX	AUXILIARY
A/V	AUDIO / VISUAL
AVG	AVERAGE
B/	BOTTOM OF
B/B	BACK TO BACK
B/F	BOTTOM OF FOOTING
BD	BOARD
BDRY	BOUNDARY
BHMA	BUILDER'S HARDWARE MANUFACTURER'S ASSOCIATION
BLDG	BUILDING
BLKG	BLOCKING
BOS	BOTTOM OF STEEL
BOT	BOTTOM
BP	BASE PLATE
BRG	BEARING
BRK	BRICK
BRKT	BRACKET
BSMT	BASEMENT
BTWN	BETWEEN
BUR	BUILT-UP ROOFING
BW	BOTH WAYS
CAB	CABINET
CB	CATCH BASIN
CCTV	CLOSED CIRCUIT TV
CD	CONSTRUCTION DOCUMENTS
CDR	CARD READER
CEM	CEMENT
CER	CERAMIC
CF	CONTRACTOR FURNISHED
CF/CI	CONTRACTOR FURNISHED /CONTRACTOR INSTALLED
CFMF	COLD-FORMED METAL FRAMING
CG	CORNER GUARD
CIP	CAST-IN-PLACE
CJ	CONTROL JOINT
CL	CENTER LINE
CLG	CEILING
CLG HT	CEILING HEIGHT
CLO	CLOSET
CLR	COLOR, CLEARANCE
CLRM	CLASSROOM
CMU	CONCRETE MASONRY UNIT
CO	CLEANOUT
COL	COLUMN
COMB	COMBINATION
COMM	COMMUNICATION
CONC	CONCRETE
CONF	CONFERENCE
CONST	CONSTRUCTION
CONT	CONTINUOUS
CONTR	CONTRACTOR
COORD	COORDINATE
CORR	CORRIDOR, CORRUGATED
CPT	CARPET
CSWK	CASEWORK
CT	CERAMIC TILE
CTR	CENTER
CU FT	CUBIC FEET
D	DEPTH
DBL	DOUBLE
DEMO	DEMOLITION
DEPT	DEPARTMENT
DET	DETAIL
DF	DRINKING FOUNTAIN
DIA	DIAMETER
DIAG	DIAGONAL. DIAGRAM
DIM	DIMENSION
DIR	DIRECTION
DIST	DISTANCE
DL	DEAD LOAD
DN	DOWN
DOC	DOCUMENT
DR	DOOR
DS	DOWNSPOUT
DWG	DRAWING

EA	EACH
EF	EACH FACE
EIFS	EXTERIOR INSULATION AND FINISH SYSTEM
EB	EXPANSION BOLT
EJ	EXPANSION JOINT
ES	EACH SIDE
EL	ELEVATION
ELEC	ELECTRIC
ELEV	ELEVATOR
EMER	EMERGENCY
EPS	EXPANDED POLYSTYRENE BOARD (INSULATION)
EQ	EQUAL
EWC	ELECTRIC WATER COOLER
EXP	EXPOSED
EXT	EXTERIOR, EXTINGUISHER
F/	FACE OF
F/C	FACE OF CONCRTETE
F/F	FACE TO FACE, FLOOR TO FLOOR
F/M	FACE OF MASONRY
F/S	FACE OF STUDS
FA	FIRE ALARM
FD	FLOOR DRAIN
FDN	FOUNDATION
FE	FIRE EXTINGUISHER
FEC	FIRE EXTINGUISHER CABINET
FF	FINISH FLOOR
FF&E	FIXTURE, FURNISHING & EQUIPMENT
FHC	FIRE HOSE CABINET
FHR	FIRE HOSE RACK
FIN	FINISH
FLR	FLOOR
FM	FACTORY MUTUAL
FP	FIRE PROOFING
FR	FRAME
FTG	FOOTING
FUR	FURRING
FUT	FUTURE
FVC	FIRE VALVE CABINET
GA	GAUGE
GAL	GALLON
GALV	GALVANIZED
GB	GRAB BAR
GC	GENERAL CONTRACTOR
GEN	GENERAL, GENERATOR
GFCI	GOVERNMENT FURNISHED CONTRACTOR INSTALLED
GFGI	GOVERNMENT FURNISHED INSTALLED BY GOVERNMENT
GL	GLASS
GR	GRADE
GR BM	GRADE BEAM
GRD	GROUND
GUT	GUTTER
GYP BD	GYPSUM BOARD
H	HIGH
HB	HOSE BIBB
HC	HANDICAPPED
HD	HEAVY DUTY
HDR	HEADER
HDW	HARDWARE
HM	HOLLOW METAL
HORIZ	HORIZONTAL
HP	HIGH POINT
HT	HEIGHT
HTR	HEATER
HVAC	HEATING, VENTILATING, & AIR CONDITIONING
HWD	HARDWOOD
IBC	INTERNATIONAL BUILDING CODE
ID	INSIDE DIAMETER
ILO	IN LIEU OF
IN	INCH
INFO	INFORMATION
INSUL	INSULATION
INT	INTERIOR
INV	INVERT
J	JOIST
JAN	JANITOR
JB	JUNCTION BOX
JT	JOINT
KD	KNOCK DOWN
KIP	KILO-POUND
KIT	KITCHEN
KO	KNOCKOUT
KPL	KICKPLATE

LAM	LAMINATE
LAV	LAVATORY
LBR	LUMBER
LB	POUND
LF	LINEAR FEET (FOOT)
LH	LEFT HAND
LIN	LINEAR
LKR	LOCKER
LL	LIVE LOAD
LLH	LONG LEG HORIZONTAL
LLV	LONG LEG VERTICAL
LOC	LOCATION
LP	LOW POINT
LT	LIGHT
LTWT	LIGHT WEIGHT
LVR	LOUVER
M	METER
MAINT	MAINTENANCE
MAS	MASOMRY
MATL	MATERIAL
MAX	MAXIMUM
MECH	MECHANICAL
MEMB	MEMBRANE
MEZZ	MEZZANINE
MFR	MANUFACTURER
MIN	MINIMUM, MINUTE
MISC	MISCELLANEOUS
MM	MILLIMETER
MO	MASONRY OPENING
MOD	MODULAR, MODIFY
MOV	MOVABLE
MTD	MOUNTED
MTL	METAL
MULL	MULLION
NA	NOT APPLICABLE
NFPA	NATIONAL FIRE PROTECTION ASSOCIATION
NIC	NOT IN CONTRACT
NO	NUMBER
NOM	NOMINAL
NRC	NOISE REDUCTION COEFFICIENT
NTS	NOT TO SCALE
OA	OVERALL
OC	ON CENTER
OD	OUTSIDE DIAMETER
OF	OUTSIDE FACE
OFD	OVERFLOW DRAIN
OPH	OPPOSITE HAND
OPNG	OPENING
OPP	OPPOSITE
OWSJ	OPEN WEB STEEL JOIST
OPR	OPERABLE
ORD	OVERFLOW ROOF DRAIN
ORIG	ORIGINAL
OZ	OUNCE
PA	PUBLIC ADDRESS
PAR	PARAPET
PAT	PATTERN
PB	PULL BOX
PBD	PARTICLEBOARD
PCF	POUNDS PER CUBIC FOOT
PCT	PERCENT
PERF	PERFORATED
PERIM	PERIMETER
PH	PHASE
PL	PROPERTY LINE
PLAM	PLASTIC LAMINATE
PLAS	PLASTER, PLASTIC
PLBG	PLUMBING
PLG	PILING
PLYWD	PLYWOOD
PNL	PANEL
PR	PAIR
PRCST	PRECAST
PRKG	PARKING
PROP	PROPERTY, PROPOSED
PSF	POUNDS PER SQUARE FOOT
PSI	POUNDS PER SQUARE INCH
PT	PAINT, POINT, PRESSURE TREATED
PTN	PARTITION
PWR	POWER
QT	QUARRY TILE
QTY	QUANTITY
R	RADIUS, RISER
RB	RESILIENT BASE
RBM	REINFORCED BRICK MASONRY
RBR	RUBBER
RC	REINFORCED CONCRETE
RCP	REFLECTED CEILING PLAN
RD	ROOF DRAIN
RDG INS	RIGID INSULATION, SOLID
REC	RECESSED
REF	REFERENCE
REM	REMOVABLE

REP	REPAIR
REPL	REPLACE
REQ	REQUIRE
REQD	REQUIRED
RESIL	RESILIENT
REV	REVISED, REVISION
RFG	ROOFING
RH	RIGHT HAND
RHR	RIGHT HAND REVERSE
RL	ROOF LEADER
RLG	RAILING
RM	ROOM
RND	ROUND
RO	ROUGH OPENING
RVL	REVEAL
SAN	SANITARY
SB	SPLASH BLOCK
SCHED	SCHEDULE
SD	SMOKE DETECTOR
SF	SQUARE FOOT (FEET)
SGL	SINGLE
SH	SHOWER
SHT	SHEET
SHTHG	SHEATHING
SHV	SHELVING
SIM	SIMILAR
SJ	SCORED JOINT
SK	SINK
SLV	SLEEVE
SM	SHEET METAL
SPEC	SPECIFICATION
SQ	SQUARE
SQ IN	SQUARE INCH
SQ YD	SQUARE YARD
SST	STAINLESS STEEL
ST	STAIRS
STC	SOUND TRANSMISSION CLASS
STD	STANDARD
STL	STEEL
STOR	STORAGE
STR	STRUCTURAL
SUB FL	SUBFLOOR
SUPP	SUPPLEMENTAL
SW	SIDEWALK, SHORT WAY
SYM	SYMMETRICAL
SYS	SYSTEM
T	TREAD
T&B	TOP & BOTTOM
T&G	TONGUE & GROOVE
T/	TOP OF
T/BM	TOP OF BEAM
T/C	TOP OF CONCRETE, TOP OF CURB
T/COL	TOP OF COLUMN
T/FTG	TOP OF FOOTING
T/J	TOP OF JOIST
T/S	TOP OF STEEL
TB	TEST BORING
TD	TRENCH DRAIN
TEL	TELEPHONE
TEMP	TEMPORARY
TER	TERRAZZO
THK	THICK
TKBD	TACKBOARD
TOPO	TOPOGRAPHY
TV	TELEVISION
TYP	TYPICAL
UC	UNDERCUT
UG	UNDERGROUND
UH	UNIT HEATER
UL	UNDERWRITERS LABORATORY
UNF	UNFINISHED
UNO	UNLESS NOTED OTHERWISE
USGS	UNITED STATES GEOLOGICAL SURVEY
VAR	VARIES
VCT	VINYL COMPOSITION TILE
VERT	VERTICAL
VIF	VERIFY IN FIELD
VTR	VENT THRU ROOF
VWC	VINYL WALL COVERING
W	WIDE, WIDTH
W/	WITH
W/O	WITHOUT
WC	WATER CLOSET
WD	WOOD
WF	WIDE FLANGE
WH	WALL HYDRANT, WATER HEATER
WL	WIND LOAD
WP	WATERPROOFING, WORK POINT
WSCT	WAINSCOT
WT	WEIGHT
WWF	WELDED WIRE FABRIC
YD	YARD DRAIN

DRAWING REFERENCE

01 / A-210

- NUMBER OF PLAN, DETAIL, ETC. ON SHEET
- SERIES NUMBER
- SHEET NUMBER WITHIN SERIES

DISCIPLINE:
G- GENERAL
LS LIFE SAFETY
C- CIVIL
A- ARCHITECTURAL
I- INTERIOR
S- STRUCTURAL
M- MECHANICAL
P- PLUMBING
E- ELECTRICAL

REFERENCE SYMBOLS

INTERIOR ELEVATION
- X — ELEVATION NUMBER ON SHEET
- SHEET NUMBER WHERE ELEVATION IS DRAWN

EXTERIOR ELEVATION
- ELEVATION NUMBER ON SHEET
- SHEET NUMBER WHERE ELEVATION IS DRAWN

SECTION
- SECTION NUMBER ON SHEET
- SHEET NUMBER WHERE SECTION IS DRAWN

DETAIL
- DETAIL NUMBER ON SHEET
- SHEET NUMBER WHERE DETAIL IS DRAWN

DRAWING SYMBOLS

Symbol	Meaning
ROOM NAME 101	ROOM NAME / NUMBER
1000	DOOR NUMBER
01	WINDOW TYPE
A3F	INTERIOR PARTITIONS
	EQUIPMENT NUMBER
TA-XX	TOILET ACCESSORY
NNN	DRAWING NOTE
NNN	DEMOLITION DRAWING NOTE
NN	COLUMN CENTERLINE
NN	FACE OF BUILDING
	REVISION CLOUD
1	REVISION NUMBER
X'-XX"	CEILING HEIGHT AFF
	SPOT ELEVATION
NAME / ELEVATION	FLOOR LEVEL & NAME
N	NORTH ARROW

MARK | DESCRIPTION | DATE

ISSUE DATE: MM-DD-YYYY
SOLICITATION NO.: 70CMSW22Q00000001
CONTRACT NO.: 70Z05018DKZFNPL08

DESIGNED BY: Designer
DRAWN BY: Author
CHECKED BY: Checker
SUBMITTED BY: HUTZEL
SIZE: ANSI D

US IMMIGRATION AND CUSTOMS ENFORCEMENT (ICE)
9495 DELEGATED DRIVE
ORLANDO, FL 32837

KZF DESIGN
700 BROADWAY STREET
CINCINNATI, OH 45202

FT BENNING, GEORGIA
IMMIGRATION & CUSTOMS ENFORCEMENT (ICE)

SYMBOLS AND ABBREVIATIONS

SHEET ID
MCB
A-001

JAN 06 2023 - FINAL SUBMITTAL (35%)

NOT FOR CONSTRUCTION

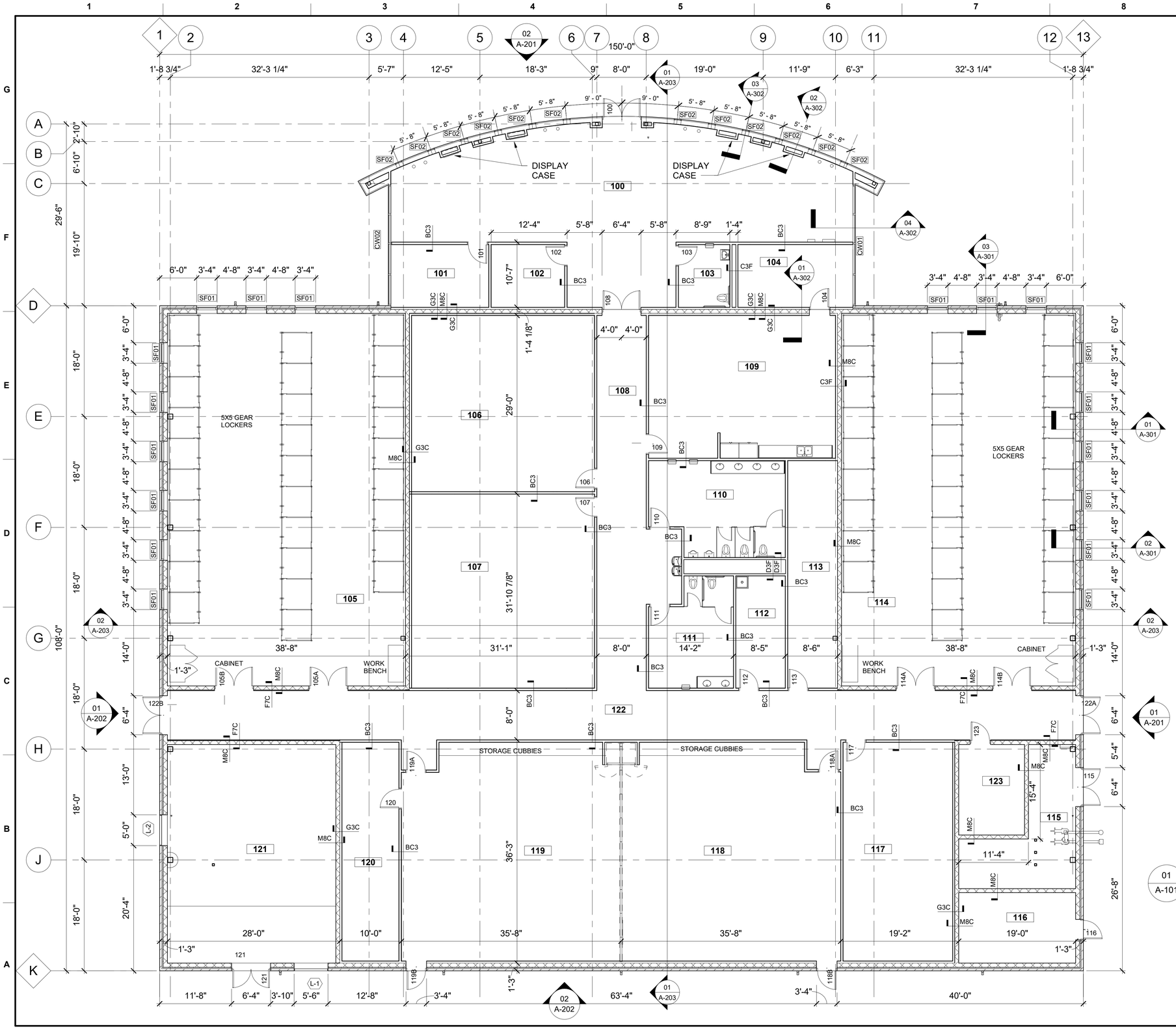

ROOM SCHEDULE

NO.	ROOM NAME
100	LOBBY
101	COUSELING
102	OFFICE
103	UNISEX RESTROOM
104	WORK ROOM / ADMIN STOR
105	GEAR LOCKER ROOM
106	TEAM ROOM
107	TEAM ROOM
108	CORRIDOR
109	BREAKROOM
110	MEN
111	WOMEN
112	JANITOR
113	STORAGE
114	GEAR LOCKER ROOM
115	MECHANICAL
116	MECH / ELECT
117	CONFERENCE
118	CLASSROOM
119	CLASSROOM
120	CONTROL/ STORAGE
121	MECHANICAL
122	CORRIDOR
123	TEL/COM

⬡ DRAWING NOTES

SEE APPENDIX C FOR REVISONS

01 A-101 **FIRST FLOOR PLAN**
1/8" = 1'-0"

SCALE: 1/8"=1'-0"

MARK	DESCRIPTION	DATE

US IMMIGRATION AND CUSTOMS ENFORCEMENT (ICE)
9495 DELEGATED DRIVE
ORLANDO, FL 32837

KZF DESIGN
700 BROADWAY STREET
CINCINNATI, OH 45202

DESIGNED BY: Designer
DRAWN BY: Author
CHECKED BY: Checker
SUBMITTED BY: HUTZEL
SIZE: ANSI D
ISSUE DATE: MM-DD-YYYY
SOLICITATION NO.: 70CMSW22Q00000001
CONTRACT NO.: 70Z05018DKZFNPL08

FT BENNING, GEORGIA
IMMIGRATION & CUSTOMS ENFORCEMENT (ICE)

FIRST FLOOR PLAN

SHEET ID
MCB
A-101

JAN 06 2023 - FINAL SUBMITTAL (35%)

NOT FOR CONSTRUCTION

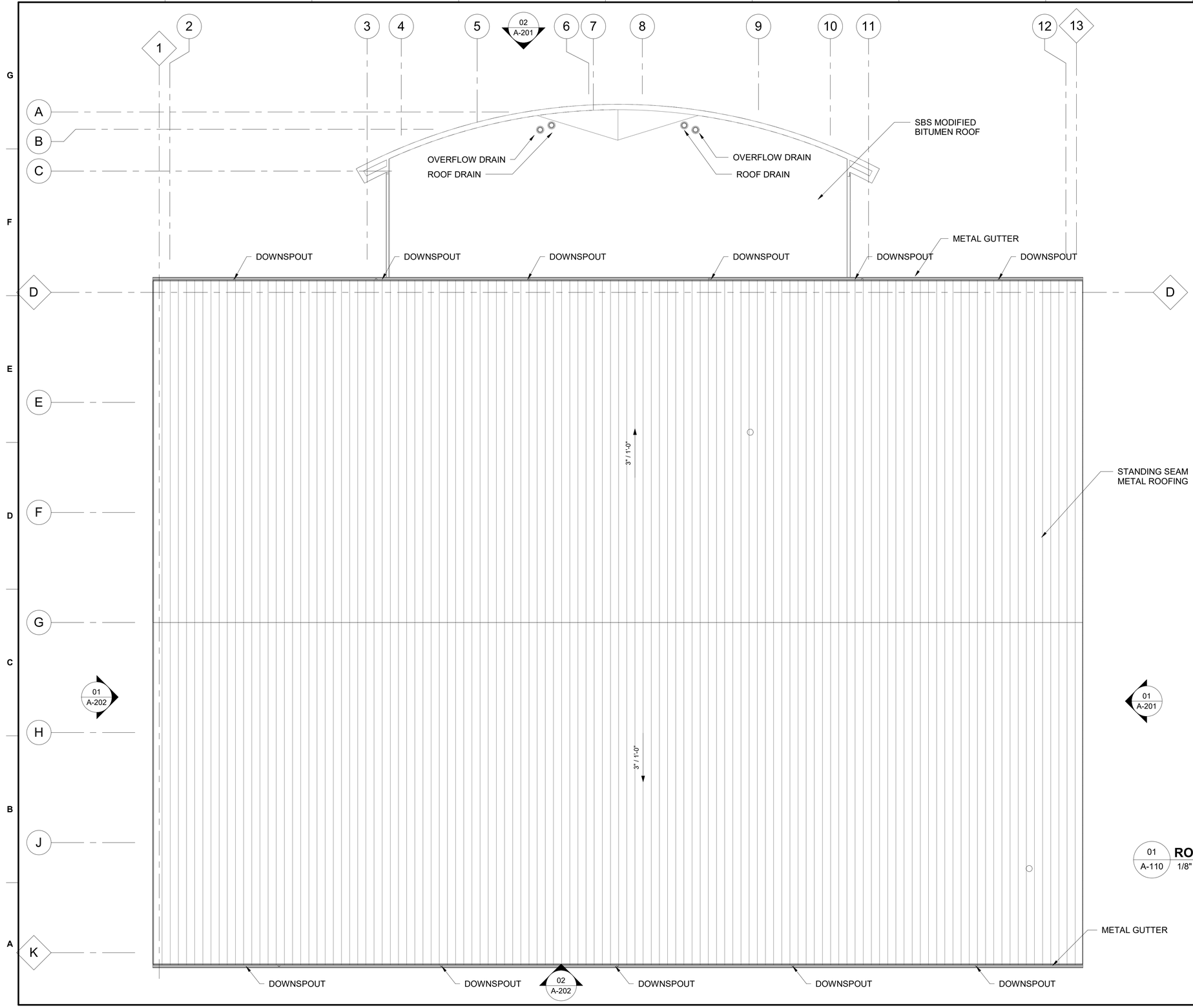

DRAWING NOTES

01 A-110 **ROOF PLAN**
1/8" = 1'-0"

MARK	DESCRIPTION	DATE

DESIGNED BY: Designer
DRAWN BY: Author
CHECKED BY: Checker
SUBMITTED BY: HUTZEL
SIZE: ANSI D
ISSUE DATE: MM-DD-YYYY
SOLICITATION NO.: 70CMSW22Q00000001
CONTRACT NO.: 70Z05018DKZFNPL08

US IMMIGRATION AND CUSTOMS ENFORCEMENT (ICE)
9495 DELEGATED DRIVE
ORLANDO, FL 32837

KZF DESIGN
700 BROADWAY STREET
CINCINNATI, OH 45202

FT BENNING, GEORGIA
IMMIGRATION & CUSTOMS ENFORCEMENT (ICE)

ROOF PLAN

SHEET ID
MCB
A-110

JAN 06 2023 - FINAL SUBMITTAL (35%)

NOT FOR CONSTRUCTION

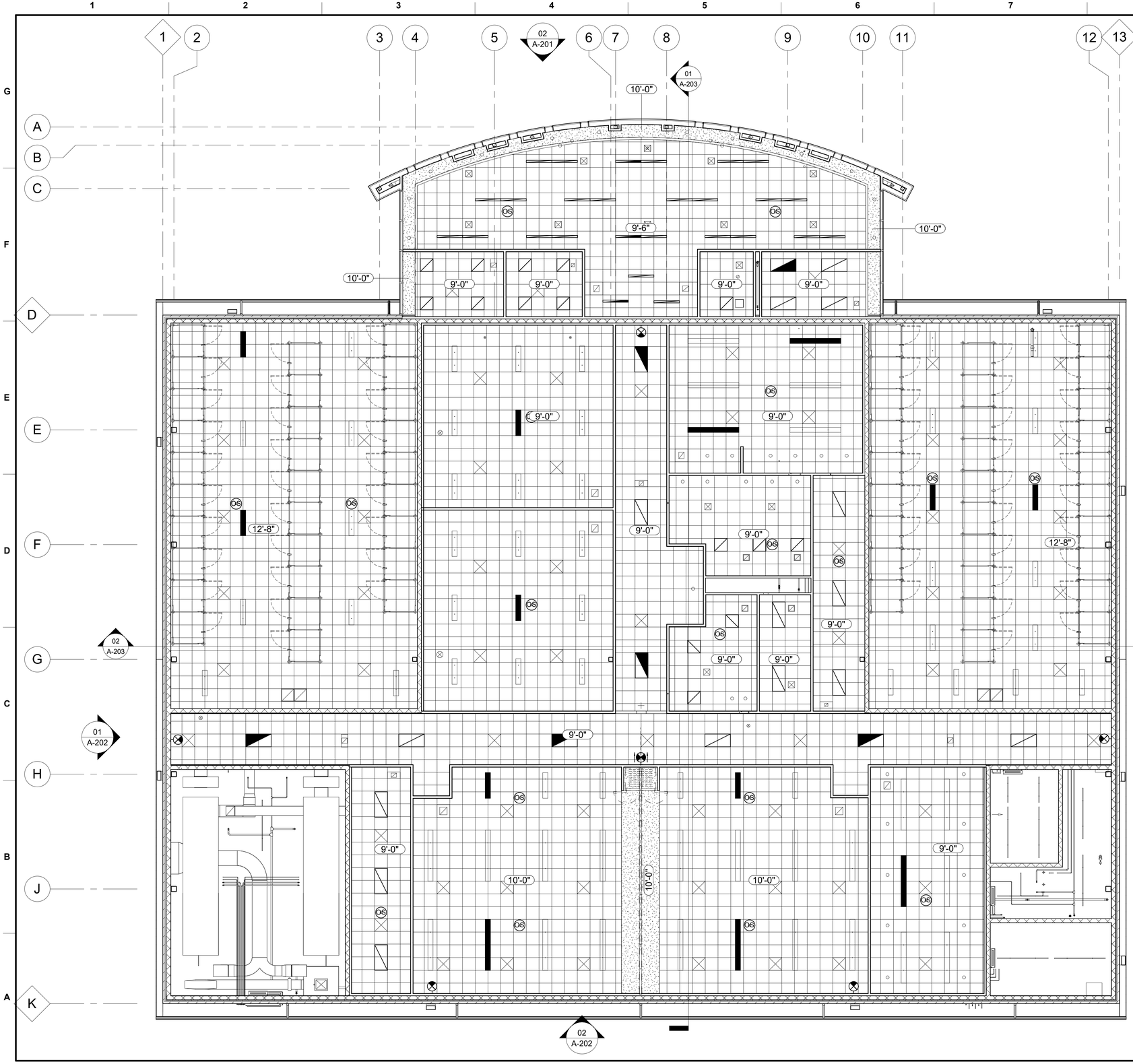

GENERAL NOTES

A ALL CEILINGS TO BE X'-X" ABOVE FINISH FLOOR UNLESS INDICATED OTHERWISE

B NOTIFY ARCHITECT OF ANY DISCREPANCIES OR UN-IDENTIFIED CEILING HEIGHTS OR TYPES PRIOR TO PROCEEDING WITH THE WORK

C CENTER TILE / GRID LAYOUT IN SPACE AS SHOWN ON PLANS UNLESS INDICATED OTHERWISE

D ALL CEILING DEVICES ARE TO BE CENTERED IN THE CEILING TILE IN WHICH THEY OCCUR UNLESS OTHERWISE INDICATED

E ANY NON-DIMENSIONED LIGHT FIXTURES AND OTHER CEILING DEVICES LOCATED IN GYPSUM BOARD CEILINGS SHALL BE DIMENSIONED AND COORDINATED PRIOR TO CONSTRUCTION

E REFERENCE MECHANICAL AND ELECTRICAL DRAWINGS FOR MOUNTING LOCATIONS OF ITEMS IN SPACES WHERE NO CEILING IS INDICATED.

F REFERENCE FIRE PROTECTION DRAWINGS FOR SPRINKLER HEAD LOCATIONS NOT INDICATED ON THE CEILING PLANS

G WHERE MINOR DISCREPANCIES OCCUR BETWEEN MECHANICAL. PLUMBING, OR ELECTRICAL DOCUMENTS AND THE ARCHITECTURAL CEILING PLAN, THE ARCHITECTURAL PLAN SHALL GOVERN.

H IN THE CASE OF MAJOR DISCREPANCIES, THE ARCHITECT SHALL BE NOTIFIED AS SOON AS THE DISCREPANCY IS DISCOVERED PRIOR TO PROCEEDING WITH THE WORK

DRAWING NOTES

CEILING LEGEND

- ACOUSTICAL LAY-IN CEILING - 2'x4'
- ACOUSTICAL LAY-IN CEILING - 2'x2'
- SUSPENDED GYPSUM BOARD CEILING
- EXPOSED STRUCTURE ABOVE
- LAY-IN LIGHT FIXTURE - 2x4
- LAY-IN LIGHT FIXTURE - 2x2
- RECESSED LIGHT FIXTURE
- RECESSED LIGHT FIXTURE - LINEAR
- PENDANT LIGHT FIXTURE
- OS OCCUPANCY SENSOR
- AIR DEVICE - SUPPLY
- AIR DEVICE - RETURN

01 A-111 **FIRST FLOOR CEILING PLAN**

1/8" = 1'-0"

N

0 4' 8' 16'

SCALE: 1/8"=1'-0"

MARK	DESCRIPTION	DATE

DESIGNED BY: Designer
DRAWN BY: Author
CHECKED BY: Checker
SUBMITTED BY: HUTZEL
SIZE: ANSI D
ISSUE DATE: MM-DD-YYYY
SOLICITATION NO.: 70CMSW22Q00000001
CONTRACT NO.: 70Z05018DKZFNPL08

US IMMIGRATION AND CUSTOMS ENFORCEMENT (ICE)
9495 DELEGATED DRIVE
ORLANDO, FL 32837

KZF DESIGN
700 BROADWAY STREET
CINCINNATI, OH 45202

FT BENNING, GEORGIA
IMMIGRATION & CUSTOMS ENFORCEMENT (ICE)

FIRST FLOOR CEILING PLAN

SHEET ID
MCB
A-111

JAN 06 2023 - FINAL SUBMITTAL (35%)

NOT FOR CONSTRUCTION

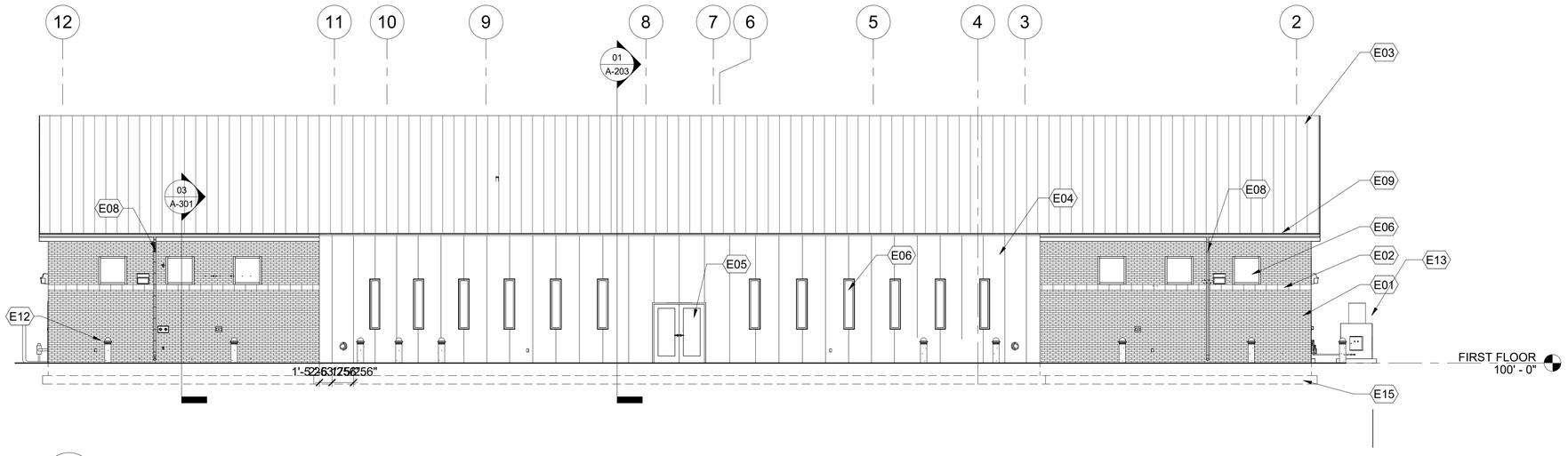

02 A-201 **WEST ELEVATION**
1/8" = 1'-0"

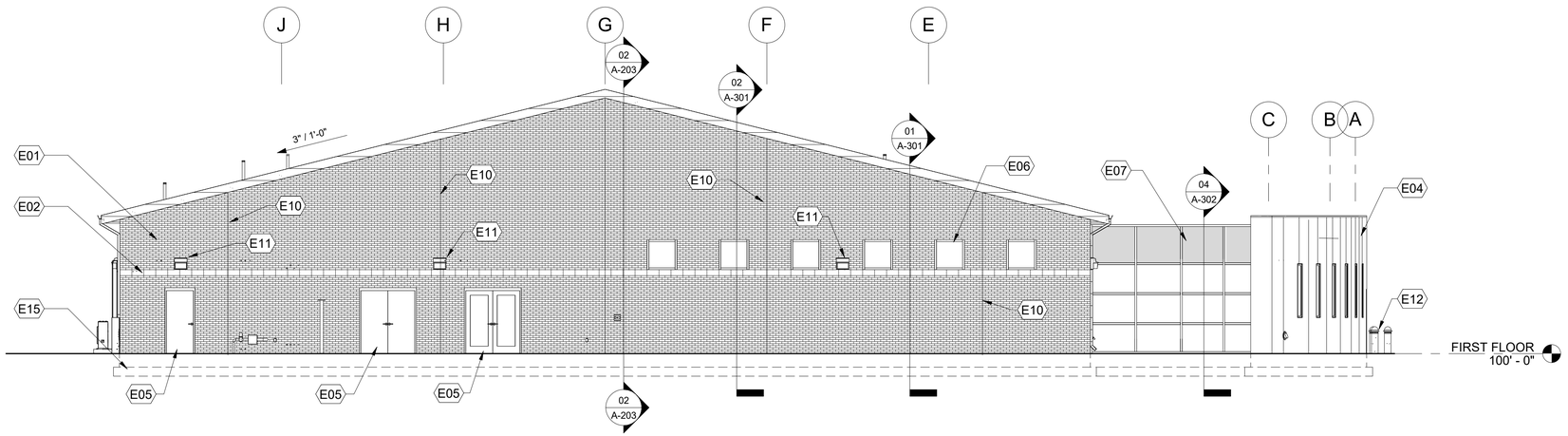

01 A-201 **NORTH ELEVATION**
1/8" = 1'-0"

DRAWING NOTES

E01 BRICK VENEER
E02 SPLIT FACE CMU ACCENT BAND
E03 STANDING SEAM METAL ROOFING
E04 METAL WALL PANELS
E05 HOLLOW METAL DOOR AND FRAME
E06 ALUMINUM STOREFRONT WINDOW
E07 ALUMINUM CURTAINWALL
E08 ALUMINUM DOWNSPOUT
E09 ALUMINUM GUTTER
E10 MASONRY CONTROL JOINT
E11 LIGHT FIXTURE - REFER ELECTRICAL DRAWINGS
E12 LIGHT BOLLARD - REFER ELECTRICAL DRAWINGS
E13 CONDENSING UNIT - REFER MECHANICAL DRAWINGS
E14 ALUMINUM LOUVER - REFER MECHANICAL DRAWINGS
E15 FOUNDATION - REFER STRUCTURAL DRAWINGS

0 4' 8' 16'
SCALE: 1/8"=1'-0"

MARK	DESCRIPTION	DATE

DESIGNED BY: Designer
DRAWN BY: Author
CHECKED BY: Checker
SUBMITTED BY: HUTZEL
SIZE: ANSI D
ISSUE DATE: MM-DD-YYYY
SOLICITATION NO.: 70CMSW22Q00000001
CONTRACT NO.: 70Z05018DKZFNPL08

US IMMIGRATION AND CUSTOMS ENFORCEMENT (ICE)
9495 DELEGATED DRIVE
ORLANDO, FL 32837

KZF DESIGN
700 BROADWAY STREET
CINCINNATI, OH 45202

FT BENNING, GEORGIA
IMMIGRATION & CUSTOMS ENFORCEMENT (ICE)

BUILDING ELEVATIONS

SHEET ID
MCB
A-201

JAN 06 2023 - FINAL SUBMITTAL (35%)

NOT FOR CONSTRUCTION

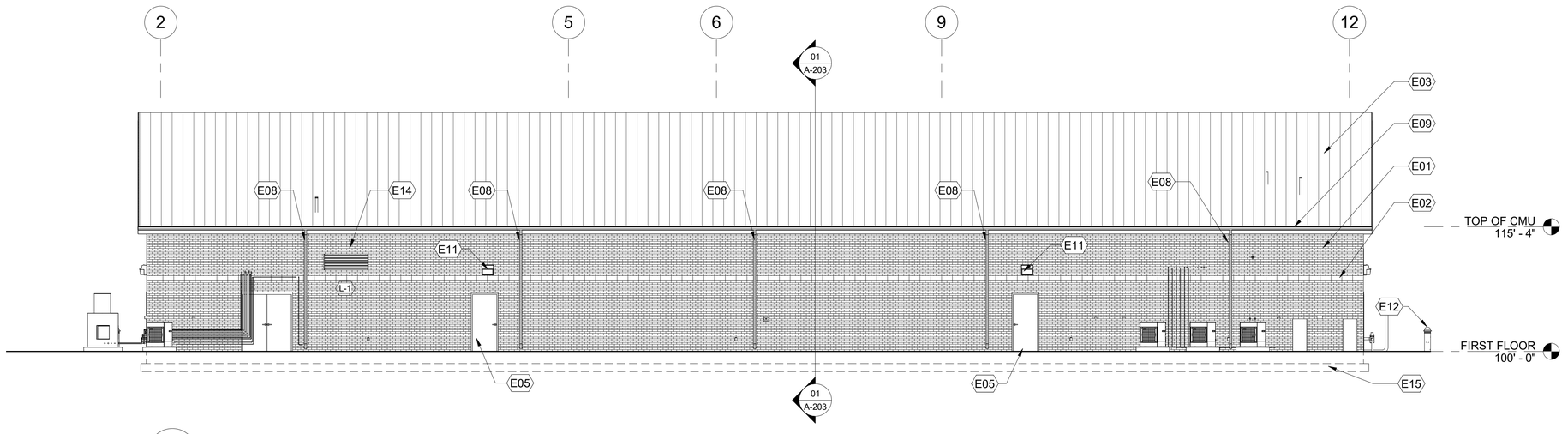

02 A-202 **EAST ELEVATION**
1/8" = 1'-0"

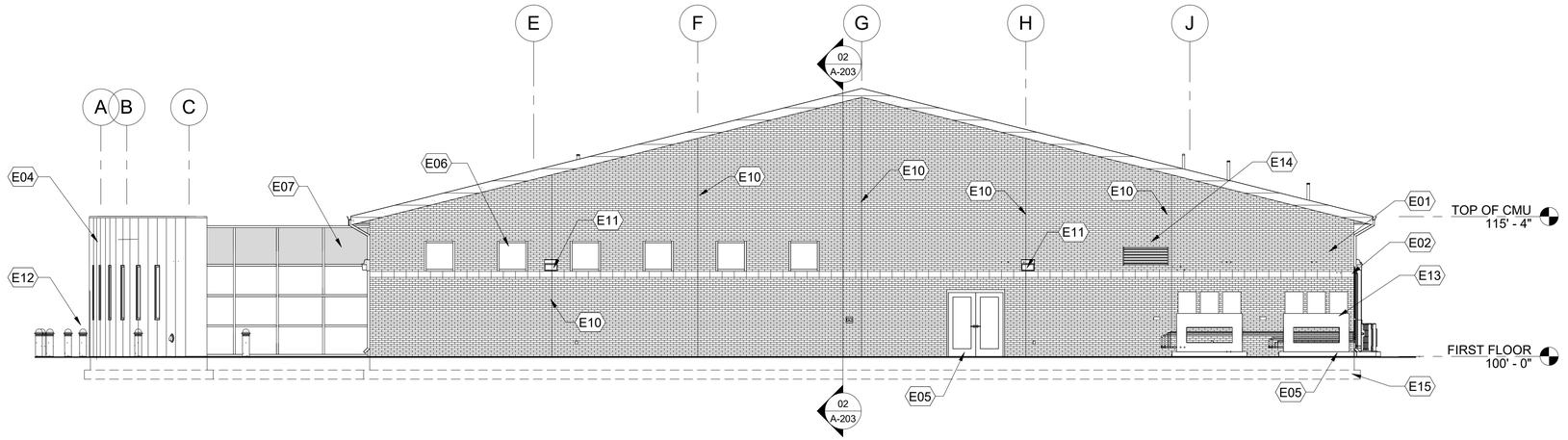

01 A-202 **SOUTH ELEVATION**
1/8" = 1'-0"

DRAWING NOTES

- E01 BRICK VENEER
- E02 SPLIT FACE CMU ACCENT BAND
- E03 STANDING SEAM METAL ROOFING
- E04 METAL WALL PANELS
- E05 HOLLOW METAL DOOR AND FRAME
- E06 ALUMINUM STOREFRONT WINDOW
- E07 ALUMINUM CURTAINWALL
- E08 ALUMINUM DOWNSPOUT
- E09 ALUMINUM GUTTER
- E10 MASONRY CONTROL JOINT
- E11 LIGHT FIXTURE - REFER ELECTRICAL DRAWINGS
- E12 LIGHT BOLLARD - REFER ELECTRICAL DRAWINGS
- E13 CONDENSING UNIT - REFER MECHANICAL DRAWINGS
- E14 ALUMINUM LOUVER - REFER MECHANICAL DRAWINGS
- E15 FOUNDATION - REFER STRUCTURAL DRAWINGS

0 4' 8' 16'
SCALE: 1/8"=1'-0"

MARK	DESCRIPTION	DATE

DESIGNED BY: Designer
DRAWN BY: Author
CHECKED BY: Checker
SUBMITTED BY: HUTZEL
SIZE: ANSI D
ISSUE DATE: MM-DD-YYYY
SOLICITATION NO.: 70CMSW22Q00000001
CONTRACT NO.: 70Z05018DKZFNPL08

US IMMIGRATION AND CUSTOMS ENFORCEMENT (ICE)
9495 DELEGATED DRIVE
ORLANDO, FL 32837

KZF DESIGN
700 BROADWAY STREET
CINCINNATI, OH 45202

FT BENNING, GEORGIA
IMMIGRATION & CUSTOMS ENFORCEMENT (ICE)

BUILDING ELEVATIONS

SHEET ID
MCB
A-202

JAN 06 2023 - FINAL SUBMITTAL (35%)

NOT FOR CONSTRUCTION

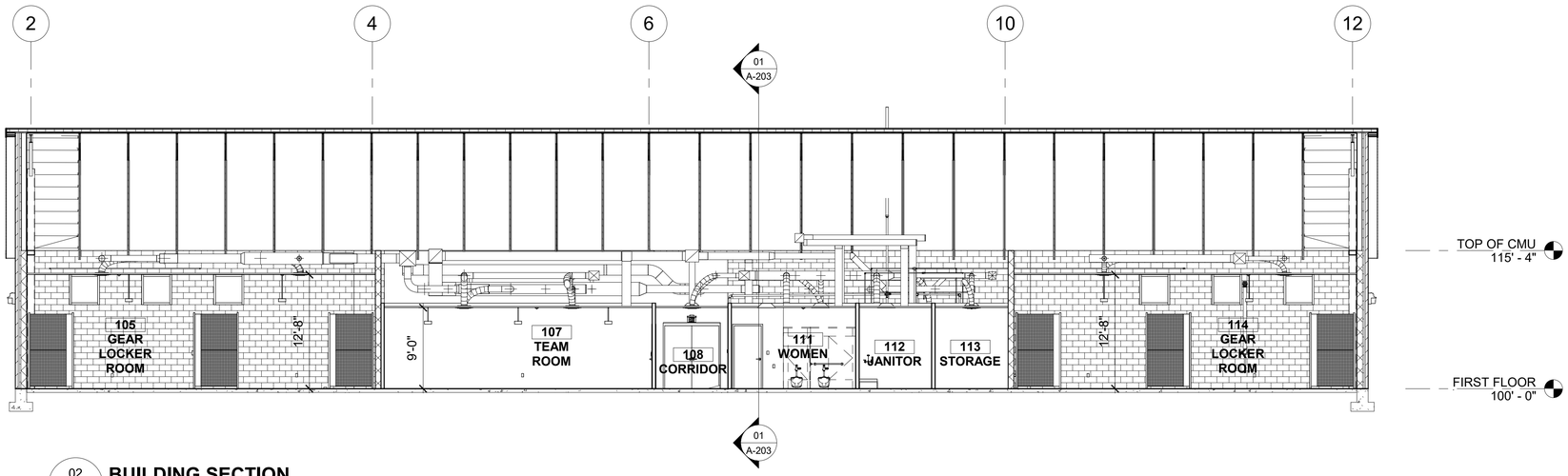

02 / A-203 **BUILDING SECTION**
1/8" = 1'-0"

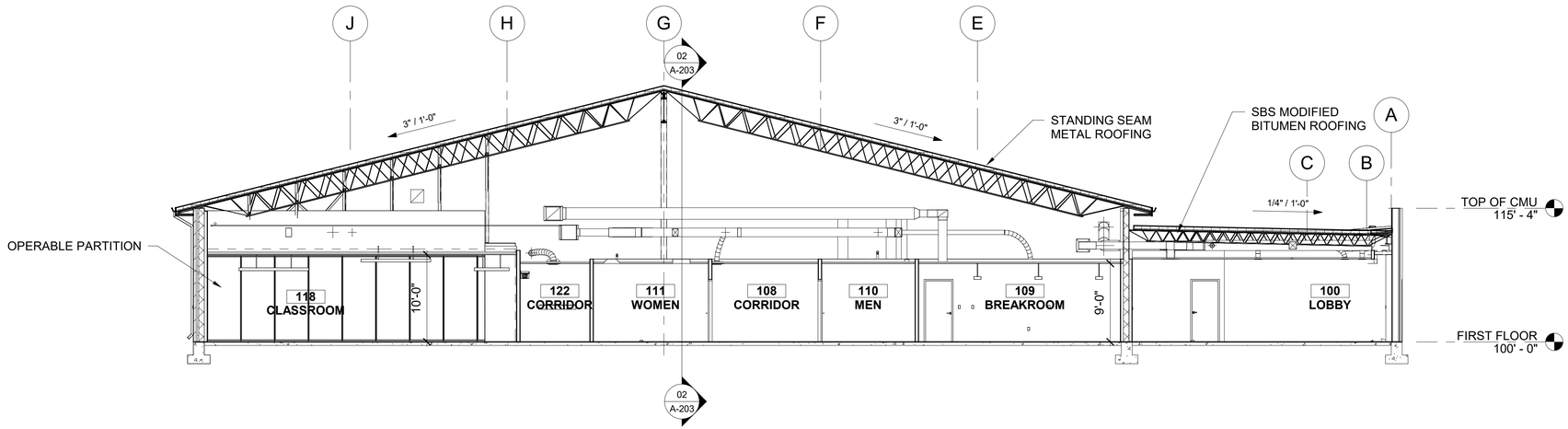

01 / A-203 **BUILDING SECTION**
1/8" = 1'-0"

0 4' 8' 16'
SCALE: 1/8"=1'-0"

NOT FOR CONSTRUCTION

MARK	DESCRIPTION	DATE

DESIGNED BY: Designer
DRAWN BY: Author
CHECKED BY: Checker
SUBMITTED BY:
SIZE: ANSI D
ISSUE DATE: MM-DD-YYYY
SOLICITATION NO.: 70CMSW22Q00000001
CONTRACT NO.: 70Z05018DKZFNPL08

US IMMIGRATION AND CUSTOMS ENFORCEMENT (ICE)
940 FELCH STREET DRIVE
ORLANDO, FL 32827

KZF DESIGN
700 BROADWAY STREET
CINCINNATI, OH 45202

FT BENNING, GEORGIA
IMMIGRATION & CUSTOMS ENFORCEMENT (ICE)

BUILDING SECTIONS

SHEET ID
MCB
A-203

JAN 06 2023 - FINAL SUBMITTAL (35%)

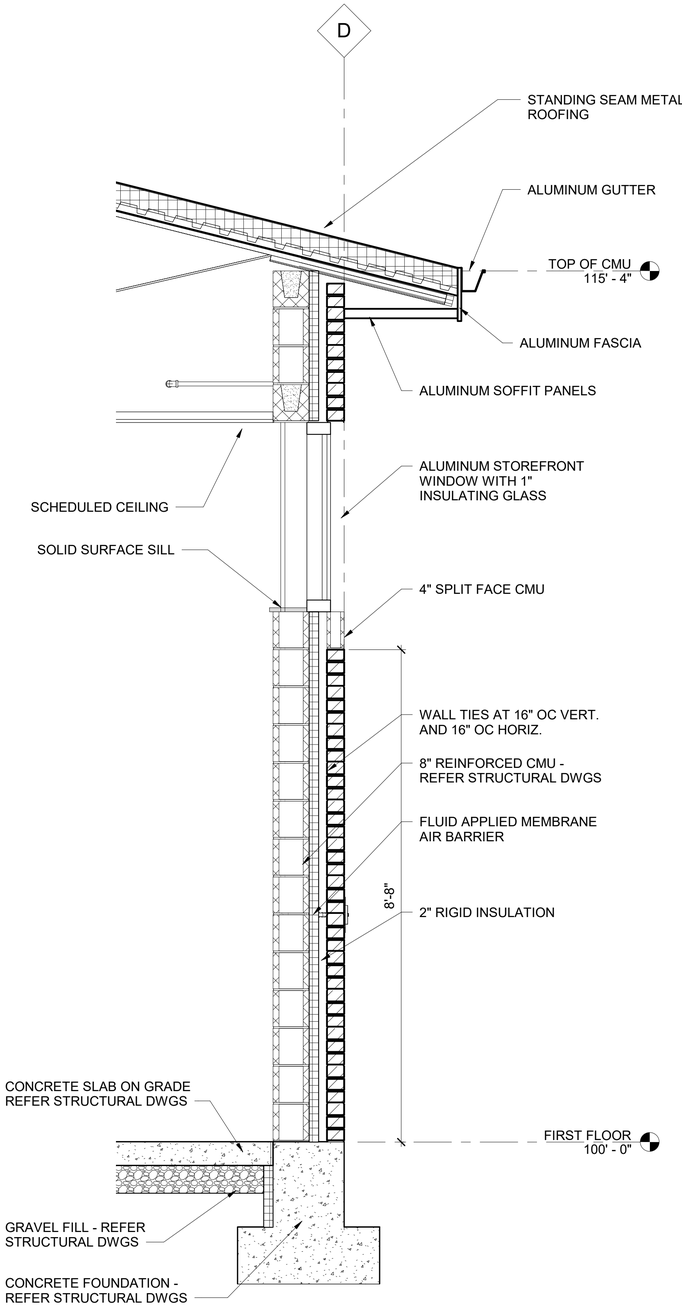

03 A-301 **WALL SECTION** 3/4" = 1'-0"

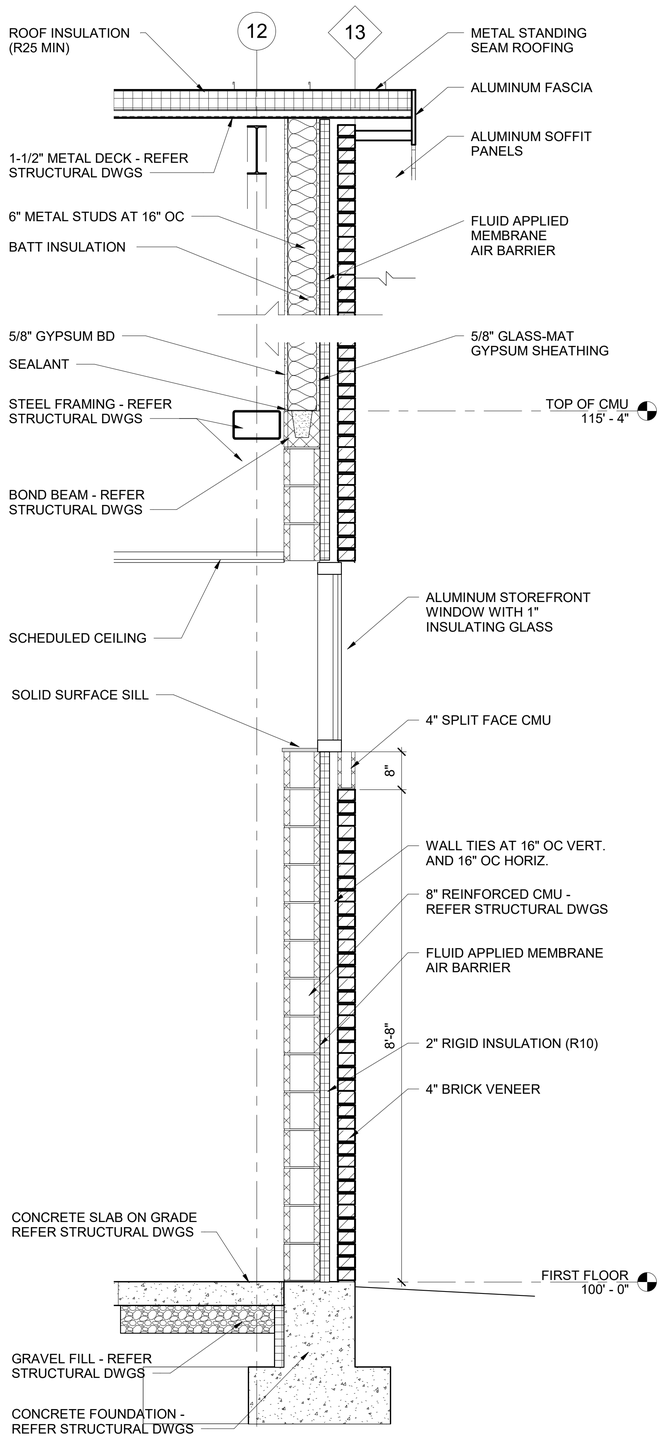

02 A-301 **WALL SECTION** 3/4" = 1'-0"

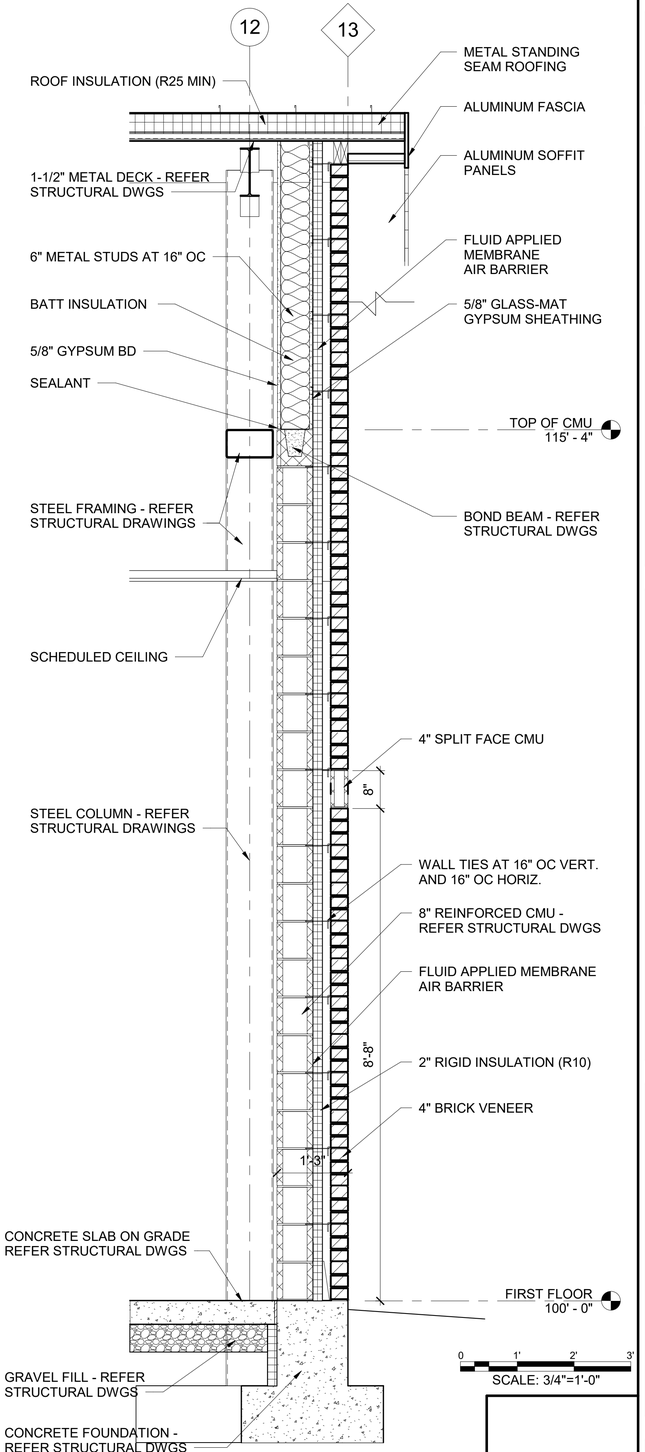

01 A-301 **WALL SECTION** 3/4" = 1'-0"

U.S. DEPARTMENT OF HOMELAND SECURITY

MARK	DESCRIPTION	DATE

ISSUE DATE: MM-DD-YYYY
SOLICITATION NO.: 70CMSW22Q00000001
CONTRACT NO.: 70Z05018KZFNPL08

DESIGNED BY: Designer
DRAWN BY: Author
CHECKED BY: Checker
SUBMITTED BY: HUTZEL
SIZE: ANSI D

US IMMIGRATION AND CUSTOMS ENFORCEMENT (ICE)
9455 DELEGATE DRIVE
ORLANDO, FL 32837

KZF DESIGN
700 BROADWAY STREET
CINCINNATI, OH 45202

FT BENNING, GEORGIA
IMMIGRATION & CUSTOMS ENFORCEMENT (ICE)

WALL SECTIONS

SHEET ID
MCB
A-301

JAN 06 2023 - FINAL SUBMITTAL (35%)

NOT FOR CONSTRUCTION

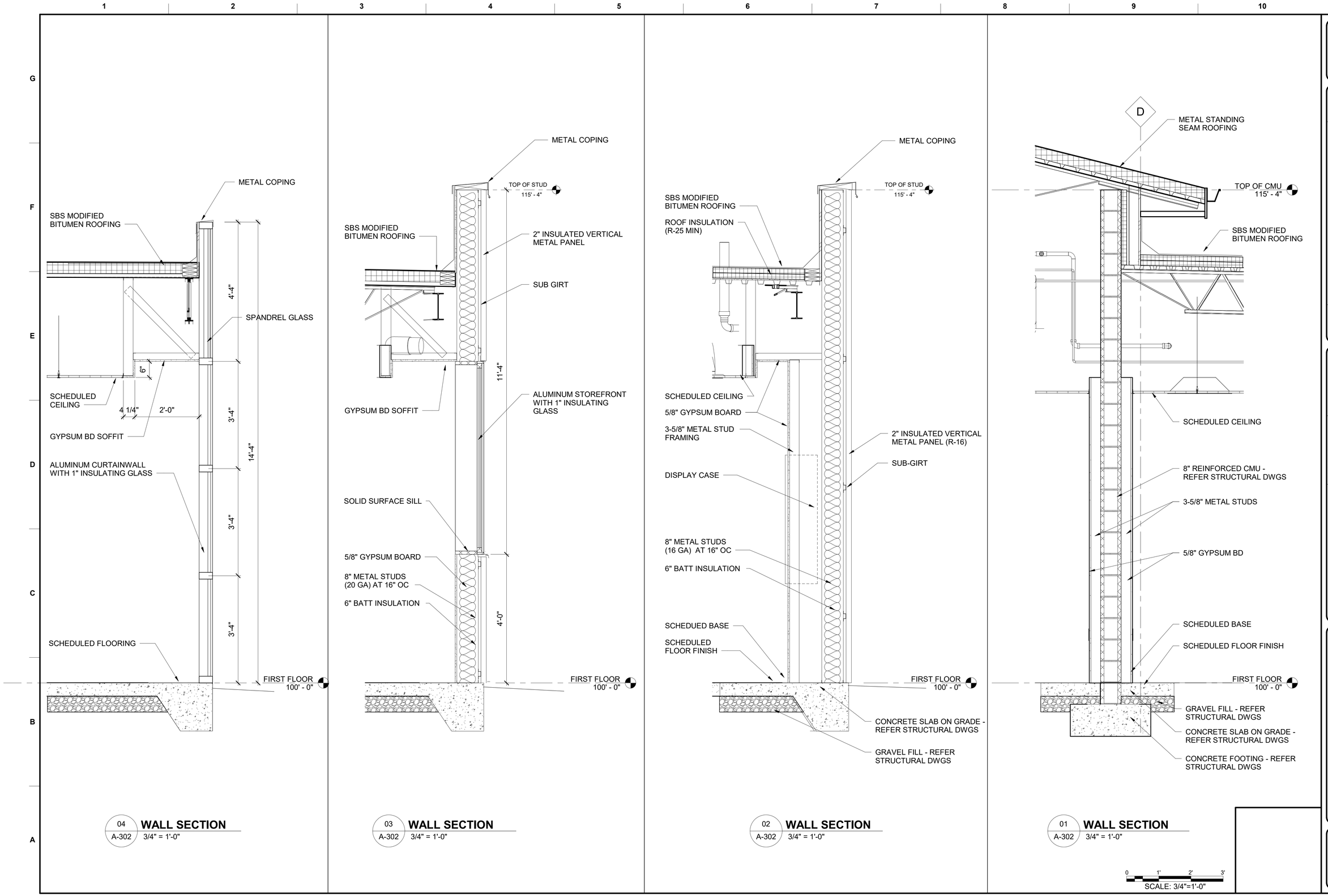

04 A-302 **WALL SECTION** 3/4" = 1'-0"

03 A-302 **WALL SECTION** 3/4" = 1'-0"

02 A-302 **WALL SECTION** 3/4" = 1'-0"

01 A-302 **WALL SECTION** 3/4" = 1'-0"

0 1' 2' 3'
SCALE: 3/4"=1'-0"

MARK	DESCRIPTION	DATE

DESIGNED BY: Designer
DRAWN BY: Author
CHECKED BY: Checker
SUBMITTED BY: HUTZEL
SIZE: ANSI D
ISSUE DATE: MM-DD-YYYY
SOLICITATION NO.: 70CMSW22Q00000001
CONTRACT NO.: 70Z05018DKZFNPL08

US IMMIGRATION AND CUSTOMS ENFORCEMENT (ICE)
9495 DELEGATED DRIVE
ORLANDO, FL 32837

KZF DESIGN
700 BROADWAY STREET
CINCINNATI, OH 45202

FT BENNING, GEORGIA
IMMIGRATION & CUSTOMS ENFORCEMENT (ICE)

WALL SECTIONS

SHEET ID
MCB
A-302

JAN 06 2023 - FINAL SUBMITTAL (35%)

NOT FOR CONSTRUCTION

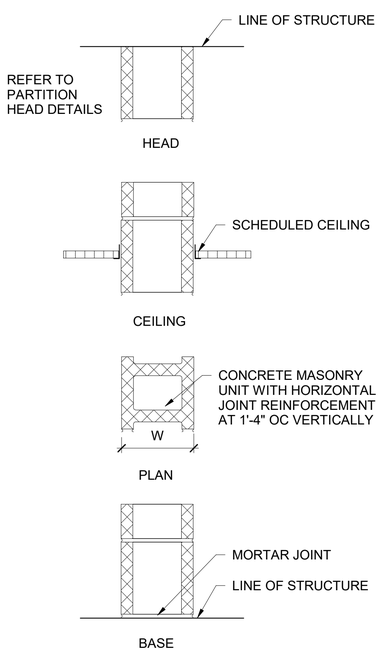

M4F W= 3 5/8"
M6F W= 5 5/8"
M8F W= 7 5/8"

PARTITION TYPE M_F

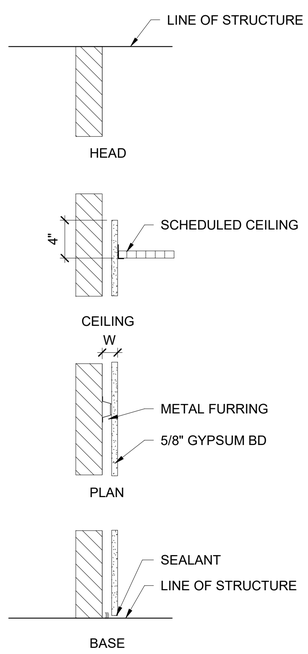

F7C W= 1 1/4"

PARTITION TYPE F_C

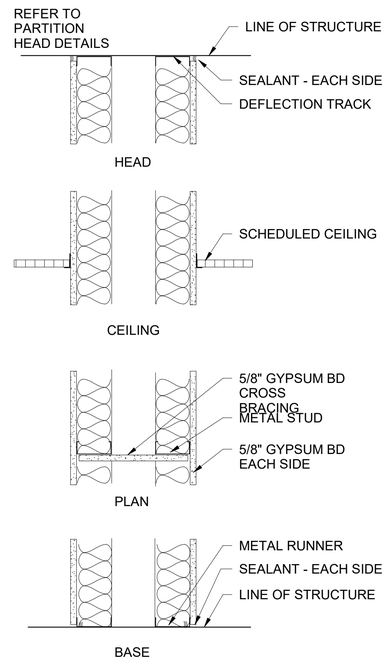

D2F W= 3 1/8"
D3F W= 4 1/4"
D6F W= 6 5/8"

PARTITION TYPE D_F

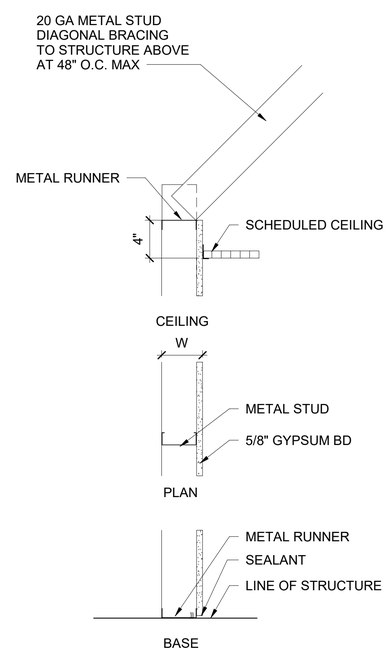

G1C W= 2 1/4"
G2C W= 3 1/8"
G3C W= 4 1/4"

PARTITION TYPE G_C

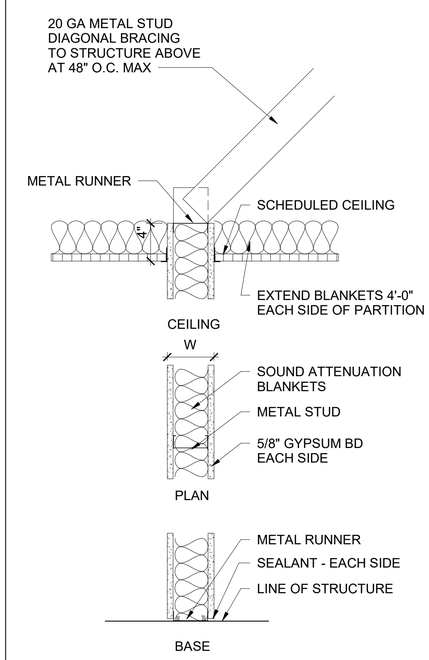

B2C W= 3 3/4"
B3C W= 4 7/8"
B6C W= 7 1/4"

PARTITION TYPE B_C

PARTITION NOTES

A "LINE OF STRUCTURE" AND "SCHEDULED CEILING" INDICATED ON PARTITION TYPES ARE DIAGRAMATIC AND DO NOT INDICATE EXACT CONSTRUCTION CONDITIONS
B CLEAN INSIDE OF ALL STUD CAVITIES BEFORE ENCLOSING PARTITION
C PROVIDE BLOCKING IN PARTITIONS FOR ALL WALL SUPPORTED ITEMS. COORDINATE WITH OWNER FOR TYPE, SIZE, AND LOCATION REQUIREMENTS OF OWNER FURNISHED ITEMS
D FOR PARTITIONS TO RECEIVE SOUND ATTENUATION INSULATION, EXTEND INSULATION FULL HEIGHT OF PARTITION UNLESS INDICATED OTHERWISE. FLOOR TRACK IS TO BE SET IN CONTINUOUS BEAD OF ACOUSTICAL SEALANT.
E FOR NON-RATED PARTITIONS INDICATED TO RECEIVE SOUND ATTENUATION - USE SOUND ATTENUATION BLANKETS (SAB)
F FOR RATED PARTITIONS INDICATED TO RECEIVE SOUND ATTENUATION - USE MINERAL WOOL SOUND ATTENUATION BLANKETS (SAFB)
G PROVIDE FULL THICKNESS OF SOUND ATTENUATION INSULATION IN ALL STUD BOX BEAMS AND HEADERS
H SECURE BLANKET INSULATION IN STUD SPACE WITH MECHANICAL DEVICES OR ADHESIVES TO PREVENT FUTURE SAGGING
I FOR PARTITIONS WITH INDICATED STC RATINGS, STAGGER HORIZONTAL AND VERTICAL GYPSUM BOARD JOINTS 24" EACH LAYER AND EACH SIDE
J FOR PARTITIONS WITH SOUND ATTENUATION BATTS, PROVIDE ACOUSTIC SEALANT AROUND ALL OPENINGS AND PENETRATIONS FOR EACH SIDE OF THE PARTITION. STAGGER ELECTRIC BOXES SO THAT THEY DO NOT OCCUR IN THE SAME STUD BAY.
K FIRE RESISTANT AND SMOKE PARTITIONS ARE TO USE RATED FIRE/SMOKE RESISTANT INFILL MATERIAL TOGETHER WITH COMPATIBLE FIRE / SMOKE RATED FIRESTOPPING SYSTEM
L PROVIDE FIRESTOPPING SYSTEM AT ALL PENETRATIONS THROUGH FIRE RESISTANT RATED PARTITIONS, AT PARTITION / DECK CONDITION, AND ELSEWHERE AS REQUIRED TO MAINTAIN THE FIRE RESISITVE INTEGRITY OF THE ASSEMBLY
M FIRE AND SMOKE RATED PARTITIONS SHALL BE IDENTIFIED AS SUCH WITH A LABEL PLACED ON EACH PARTITION SEGMENT ABOVE THE CEILING ON EACH SIDE AT 6'-0" MAX
N PROVIDE 4'x8'x 3/4" FIRE RESISTANT PLYWOOD BACK BOARDS IN ELECTRICAL CLOSETS, DATA/COMM ROOMS, AND WHERE OTHERWISE REQUIRED. MOUNT BOARDS 4" ABOVE FINISH FLOOR AND TIGHT TO PARTITION FACE. COORDINATE WITH ELECTRICAL CONTRACTOR
O PROVIDE BULLNOSE MASONRY UNITS AT ALL EXPOSED OUTSIDE CORNER LOCATIONS UNLESS SCHEDULED TO RECEIVE TILE, CORNER GUARD, OR INDICATED OTHERWISE
P PROVIDE MASONRY BOND BEAM AND LINTEL UNITS WITH REINFORCING AND GROUT AS INDICATED ON STRUCTURAL DRAWINGS. PROVIDE LINTELS AT HEAD OF DOORS, WINDOWS, ALUMINUM STOREFRONT, ETC.

PARTITION TYPE LEGEND

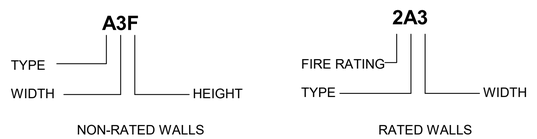

WIDTH
1 1 5/8" METAL STUD
2 2 1/2" METAL STUD
3 3 5/8" METAL STUD
4 4" METAL STUD, 4" CMU
6 6" METAL STUD, 6" CMU
7 7/8" METAL HAT CHANNELS
8 8" CMU

HEIGHT
F FULL HEIGHT TO STRUCTURE ABOVE
C 4" ABOVE FINISH CEILING
P PARTIAL HEIGHT AS INDICATED

FIRE RATING
1 1 HOUR
2 2 HOUR

NOT FOR CONSTRUCTION

MARK	DESCRIPTION	DATE

DESIGNED BY: Designer
DRAWN BY: Author
CHECKED BY: Checker
ISSUE DATE: MM-DD-YYYY
SOLICITATION NO.: 70CMSW22Q00000001
CONTRACT NO.: 70Z05018DKZFNPL08
SUBMITTED BY:
SIZE: ANSI D

US IMMIGRATION AND CUSTOMS ENFORCEMENT (ICE)
9485 BEE LINE FED DRIVE
ORLANDO, FL 32837

KZF DESIGN
700 BROADWAY STREET
CINCINNATI, OH 45202

FT BENNING, GEORGIA
IMMIGRATION & CUSTOMS ENFORCEMENT (ICE)

PARTITION TYPES

SHEET ID
MCB
A-501

JAN 06 2023 - FINAL SUBMITTAL (35%)

DOOR TYPES

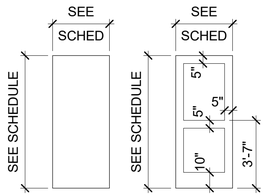

F FG2

FRAME TYPES

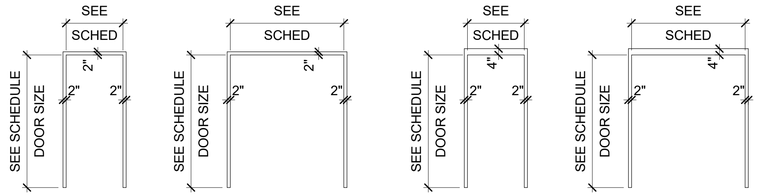

01 02 03 04

STOREFRONT TYPES

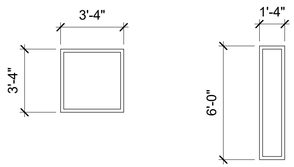

SF01 SF02

CURTAINWALL TYPES

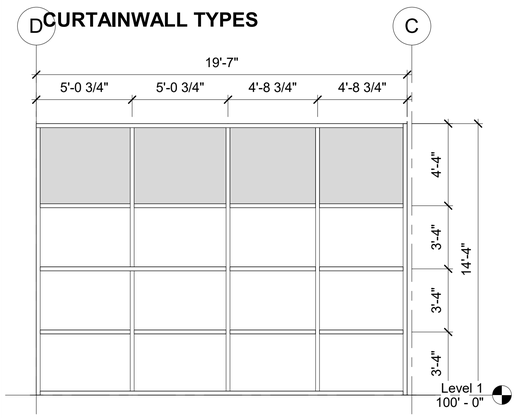

CW01

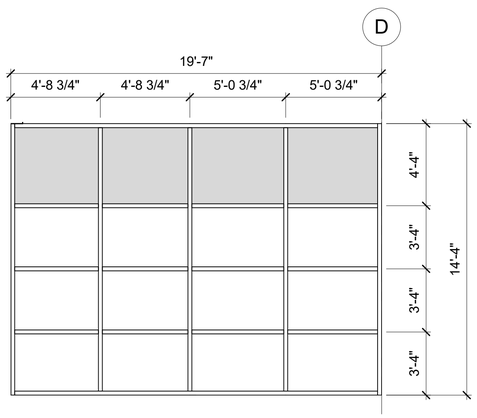

CW02

DOOR AND FRAME SCHEDULE

	DOOR								FRAME			DETAILS					
MARK	# OF LEAFS	WIDTH	HEIGHT	THK	TYPE	MATL	FINISH	GLASS	TYPE	MATL	FINISH	HEAD	JAMB	RATING	HDW SET	REMARKS	MARK
100	2	3' - 0"	7' - 0"	0' - 1 3/4"	FG2	HM	PT		02	HM	PT						100
101	1	3' - 0"	7' - 0"	0' - 1 3/4"	F	WD	PF	--	01	HM	PT						101
102	1	3' - 0"	7' - 0"	0' - 1 3/4"	F	WD	PF	--	01	HM	PT						102
103	1	3' - 0"	7' - 0"	0' - 1 3/4"	F	WD	PF	--	01	HM	PT						103
104	1	3' - 0"	7' - 0"	0' - 1 3/4"	F	WD	PF	--	03	HM	PT						104
105A	2	3' - 0"	7' - 0"	0' - 1 3/4"	F	HM	PT	--	04	HM	PT						105A
105B	2	3' - 0"	7' - 0"	0' - 1 3/4"	F	HM	PT	--	04	HM	PT						105B
106	1	3' - 0"	7' - 0"	0' - 1 3/4"	F	WD	PF	--	01	HM	PT						106
107	1	3' - 0"	7' - 0"	0' - 1 3/4"	F	WD	PF	--	01	HM	PT						107
108	2	3' - 0"	7' - 0"	0' - 1 3/4"	F	WD	PF	--	04	HM	PT						108
109	1	3' - 0"	7' - 0"	0' - 1 3/4"	F	WD	PF	--	01	HM	PT						109
110	1	3' - 0"	7' - 0"	0' - 1 3/4"	F	WD	PF	--	01	HM	PT						110
111	1	3' - 0"	7' - 0"	0' - 1 3/4"	F	WD	PF	--	01	HM	PT						111
112	1	3' - 0"	7' - 0"	0' - 1 3/4"	F	WD	PF	--	01	HM	PT						112
113	1	3' - 0"	7' - 0"	0' - 1 3/4"	F	WD	PF	--	01	HM	PT						113
114A	2	3' - 0"	7' - 0"	0' - 1 3/4"	F	HM	PT	--	04	HM	PT						114A
114B	2	3' - 0"	7' - 0"	0' - 1 3/4"	F	HM	PT	--	04	HM	PT						114B
115	2	3' - 0"	7' - 0"	0' - 1 3/4"	F	HM	PT	--	04	HM	PT						115
116	1	3' - 0"	7' - 0"	0' - 1 3/4"	F	HM	PT	--	01	HM							116
117	1	3' - 0"	7' - 0"	0' - 1 3/4"	F	WD	PF	--	01	HM	PT						117
118A	1	3' - 0"	7' - 0"	0' - 1 3/4"	F	WD	PF	--	01	HM	PT						118A
118B	1	3' - 0"	7' - 0"	0' - 1 3/4"	F	HM	PT	--	03	HM	PT						118B
119A	1	3' - 0"	7' - 0"	0' - 1 3/4"	F	WD	PF	--	01	HM	PT						119A
119B	1	3' - 0"	7' - 0"	0' - 1 3/4"	F	HM	PT	--	03	HM	PT						119B
120	1	3' - 0"	7' - 0"	0' - 1 3/4"	F	WD	PF	--	01	HM	PT						120
121	2	3' - 0"	7' - 0"	0' - 1 3/4"	F	HM	PT	--	04	HM	PT						121
122A	2	3' - 0"	7' - 0"	0' - 1 3/4"	FG2	HM	PT		04	HM	PT						122A
122B	2	3' - 0"	7' - 0"	0' - 1 3/4"	FG2	HM	PT		04	HM	PT						122B
123	1	3' - 0"	7' - 0"	0' - 1 3/4"	F	HM	PT	--	01	HM	PT						123

REMARKS

R1 TEXT
R2 TEXT
R3 TEXT
R4 TEXT

GLASS TYPES

01 1/4" CLEAR FLOAT GLASS
02 1/4" CLEAR TEMPERED GLASS
03 1/4" TINTED FLOAT GLASS
04 1/4" TINTED TEMPERED GLASS
05 1" CLEAR INSULATING GLASS
06 1" CLEAR TEMPERED INSULATING GLASS
07 1" TINTED INSULATING GLASS
08 1" TINTED TEMPERED INSULATING GLASS
09 1" INSULATING SPANDREL GLASS

ABBREVIATIONS

AL ALUMINUM
AN ANODIZED
HM HOLLOW METAL
PF PRE-FINISHED
PT PAINT
STL STEEL
WD WOOD

MARK DESCRIPTION DATE

ISSUE DATE: MM-DD-YYYY
SOLICITATION NO.: 70CMSW22Q00000001
CONTRACT NO.: 70Z05018DKZFNPL08

DESIGNED BY: Designer
DRAWN BY: Author
CHECKED BY: Checker
SUBMITTED BY: KHITZEL
SIZE: ANSI D

US IMMIGRATION AND CUSTOMS ENFORCEMENT (ICE)
9465 LEGACY PARK DRIVE
ORLANDO, FL 32837

KZF DESIGN
700 BROADWAY STREET
CINCINNATI, OH 45202

FT BENNING, GEORGIA
IMMIGRATION & CUSTOMS ENFORCEMENT (ICE)

DOOR SCHEDULE

SHEET ID
MCB
A-601

JAN 06 2023 - FINAL SUBMITTAL (35%)

NOT FOR CONSTRUCTION

ROOM FINISH SCHEDULE

NUMBER	ROOM NAME	Base Finish	Floor Finish	North Wall	East Wall	South Wall	West Wall	Ceiling Finish	Remarks
100	LOBBY	TB	PC	WP	WP	WP2	WP	ACT	
101	COUSELING	RB	CPT	WP	WP	WP	WP	ACT	
102	OFFICE	RB	CPT	WP	WP	WP	WP	ACT	
103	UNISEX RESTROOM	TB	PT	WP	WP	WP	WP	ACT	
104	WORK ROOM / ADMIN STOR	RB	LVT	WP	WP	WP	WP2	ACT	
105	GEAR LOCKER ROOM	RB	SC	WP	WP	WP	WP	ACT	
106	TEAM ROOM	RB	LVT	WP2	WP	WP	WP	ACT	
107	TEAM ROOM	RB	LVT	WP	WP	WP2	WP	ACT	
108	CORRIDOR	RB	LVT	WP	WP	WP	WP	ACT	
109	BREAKROOM	RB	LVT	WP	WP2	WP	WP	ACT	
110	MEN	TB	PT	WT	WT	WT	WT	ACT	
111	WOMEN	TB	PT	WT	WT	WT	WT	ACT	
112	JANITOR	RB	SC	WP	WP	WP	WP	ACT	
113	STORAGE	RB	SC	WP	WP	WP	WP	ACT	
114	GEAR LOCKER ROOM	RB	SC	WP	WP	WP	WP	ACT	
115	MECHANICAL	RB	SC	WP	WP	WP	WP	EXP	
116	MECH / ELECT	RB	SC	WP	WP	WP	WP	EXP	
117	CONFERENCE	RB	CPT	WP	WP	WP	WP	ACT	
118	CLASSROOM	RB	LVT	WP	WP	WP2	WP	ACT / GYP	
120	CONTROL/ STORAGE	RB	LVT	WP	WP	WP	WP	ACT	
121	MECHANICAL	RB	SC	WP	WP	WP	WP	EXP	
122	CORRIDOR	RB	LVT	WP	WP	WP	WP	ACT	
123	TEL/COM	RB	SC	WP	WP	WP	WP	EXP	

GENERAL NOTES

A PROVIDE ARCHITECTURAL FINISH MATERIALS PER FORT BENNING'S INSTALLATION DESIGN GUIDE.

B REFERENCE REFLECTED CEILING PLANS AND FINISH SCHEDULE FOR CEILING TYPES. PAINT ALL GYP. BD. CEILINGS AND SOFFITS IN A FLAT FINISH.

C ALL WALLS AND COLUMNS ARE TO BE PAINTED IN AN EGGSHELL FINISH UNLESS NOTED OTHERWISE. ANY DISCREPANCIES ARE TO BE BROUGHT TO THE DESIGNERS ATTENTION PRIOR TO PAINTING.

D ALL FIRE EXTINGUISHER CABINETS ARE TO BE PREFABRICATED IN WHITE.

E ALL ACCESS PANELS OR DIFFUSERS ARE TO BE PAINTED A SEMI-GLOSS FINISH TO MATCH ADJACENT WALL FINISH UNLESS NOTED OTHERWISE.

F CONTINUE SPECIFIED PAINT AND WALLCOVERINGS ABOVE AND BELOW ALL MILLWORK COUNTERS AND CABINETS.

G ALL HOLLOW METAL DOORS AND DOOR FRAMES TO BE PAINTED IN SEMIGLOSS FINISH.

I PAINT ALL EXPOSED PIPING, CONDUIT, ELECTRICAL DEVICES, DUCTWORK, ETC. TO MATCH ADJACENT WALL FINISH.

J INSTALL FLOORING UNDER ALL BASE CABINETS AND INSTALL SCHEDULED BASE ON TOEKICK OF ALL BASE CABINETS.

L ALL CHANGES IN FLOORING, BETWEEN ROOMS, IS TO OCCUR AT CENTERLINE OF DOOR.

M ALL TRIM AND BASE TO TERMINATE INTO NEAREST INSIDE CORNER, UNLESS NOTED OTHERWISE.

P ALL WOOD DOORS TO BE STAINED UNLESS NOTED OTHERWISE.

Q ALL WINDOW SILLS TO BE IN SOLID SURFACE MATERIAL, UNLESS NOTED OTHERWISE.

INTERIOR FINISH ABBREVIATIONS

ACT	ACOUSTICAL CEILING TILE
CPT	CARPET TILE
GYP	GYPSUM BOARD
LVT	LUXURY VINYL TILE
MFR	MANUFACTURER
PC	POLISHED CONCRETE
PT	PORCELAIN TILE
RB	RESILIENT BASE
SC	SEALED/STAINED CONCRETE
SS	SOLID SURFACE
TB	TILE BASE
WM	WALKOFF MAT
WP	PAINT
WP2	ACCENT PAINT
WT	WALL TILE

MARK	DESCRIPTION	DATE

DESIGNED BY: Designer
DRAWN BY: Author
CHECKED BY: Checker
SUBMITTED BY: HUTZEL
SIZE: ANSI D
ISSUE DATE: Issue Date
SOLICITATION NO.: 70CMSW22Q00000001
CONTRACT NO.: 70Z05018DKZFNPL08

US IMMIGRATION AND CUSTOMS ENFORCEMENT (ICE)
9495 DELEGATED DRIVE
ORLANDO, FL 32837

KZF DESIGN
700 BROADWAY STREET
CINCINNATI, OH 45202

Enter address here
Project Name

FINISH SCHEDULE

SHEET ID
MCB
I-601

JAN 06, 2023 - FINAL SUBMITTAL (35%)

NOT FOR CONSTRUCTION

xx	SPRINKLER DESIGN LEGEND
LH	LIGHT HAZARD: SYSTEM PROVIDING A DENSITY OF 0.10 GPM/SQFT OVER DESIGN AREA OF 1,500 SQUARE FEET FOR CEILINGS UP TO 30 FEET
OH	ORDINARY HAZARD: SYSTEM PROVIDING A DENSITY OF 0.20 GPM/SQFT OVER DESIGN AREA OF 2,500 SQUARE FEET FOR CEILINGS UP TO 30 FEET

STORAGE OCCUPANCY TO FOLLOW NFPA 13 DESIGN CRITERIA PER UFC SECTION 9-7.3.1.2. UFC TABLE 9-3 DESIGN AREAS FOR NON-STORAGE OCCUPANCIES ONLY.

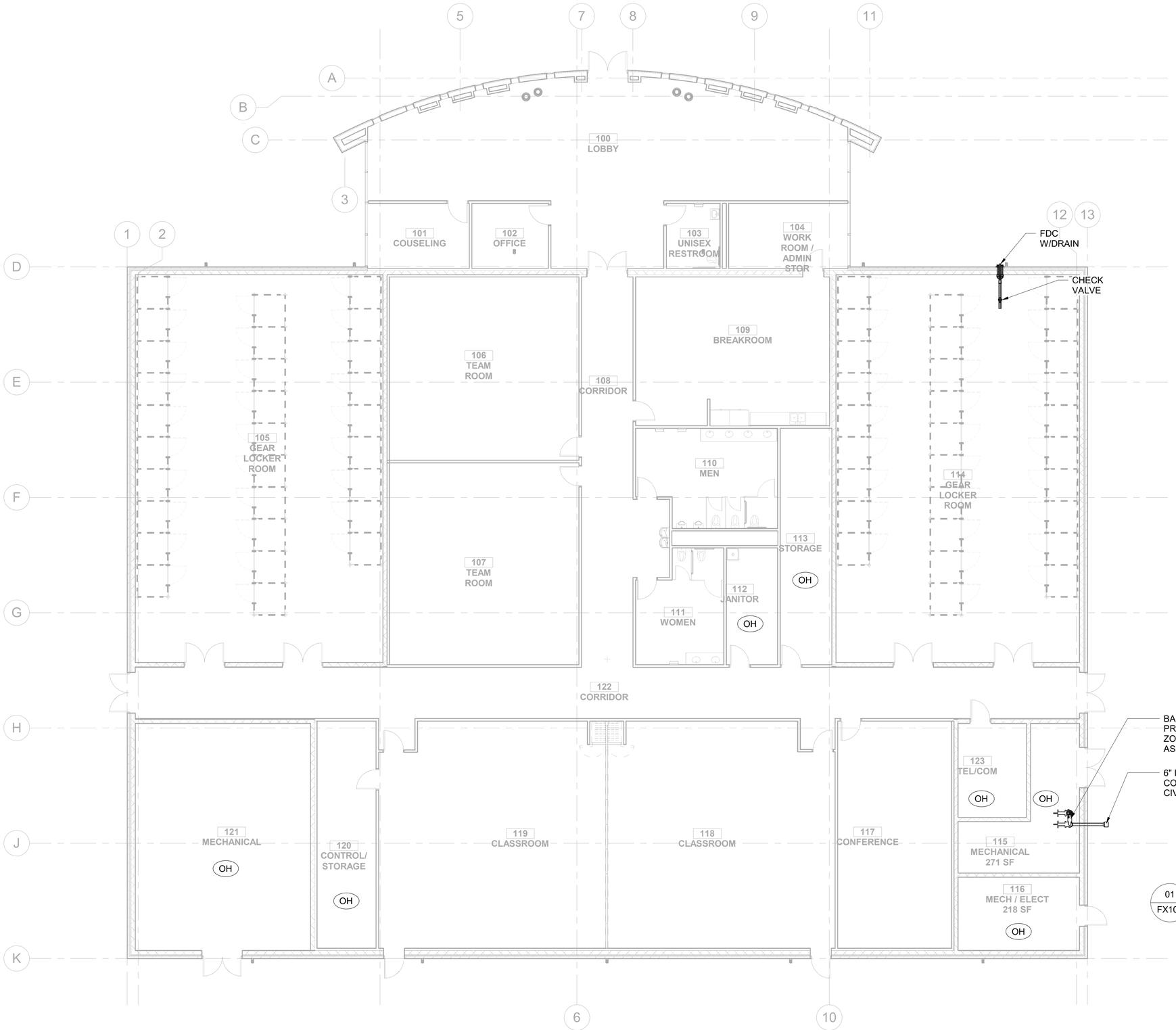

01 / FX101 **FIRE SPRINKLER FIRST FLOOR PLAN**
1/8" = 1'-0"

MARK	DESCRIPTION	DATE

ISSUE DATE: JAN 06,2023
SOLICITATION NO.: 70CMSW22Q00000001
CONTRACT NO.: 70ZI0518DKZFNPL08

DESIGNED BY: K Lawrence
DRAWN BY: A Lockwood
CHECKED BY: E Babcock
SUBMITTED BY: HUTZEL
SHEET ANSI D

US IMMIGRATION AND CUSTOMS ENFORCEMENT (ICE)
9480 DELEGATE DRIVE
ORLANDO, FL 32837

KZF DESIGN
700 BROADWAY STREET
CINCINNATI, OH 45202

FT BENNING, GEORGIA
IMMIGRATION & CUSTOM'S ENFORCEMENT (ICE)

FIRE SUPPRESSION FIRST FLOOR PLAN

SHEET ID
MCB
FX101

JAN 06, 2023 - FINAL SUBMITTAL (35%)

NOT FOR CONSTRUCTION

PLUMBING ABBREVIATIONS

AFF	ABOVE FINISHED FLOOR
AHU	AIR HANDLING UNIT
ASSE	AMERICAN SOCIETY OF SANITARY ENGINEERING
BFP	BACKFLOW PREVENTER
BHP	BRAKE HORSEPOWER
BP	BOOSTER PUMP
BTU	BRITISH THERMAL UNIT
BTUH	BRITISH THERMAL UNIT PER HOUR
CFH	CUBIC FEET PER HOUR
CO	CLEAN OUT
CONC	CONCRETE
CP	CIRCULATING PUMP
DCW	DOMESTIC COLD WATER
DFU	DRAINAGE FIXTURE UNITS
DHWR	DOMESTIC HOT WATER RETURN
DHWR (120°F)	DOMESTIC HOT WATER RETURN (120°F)
DHWS	DOMESTIC HOT WATER SUPPLY
DHWS (120°F)	DOMESTIC HOT WATER SUPPLY (120°F)
DHWS (131°F)	DOMESTIC HOT WATER SUPPLY (131°F)
DIA	DIAMETER
DN	DOWN
DS	DOWN SPOUT
DWG	DRAWING
EL or ELEV	ELEVATION
ET	EXPANSION TANK
ETC	ETCETERA
EWC	ELECTRIC WATER COOLER
EWH	ELECTRIC WATER HEATER
F	FAHRENHEIT TEMPERATURE
FCO	FLOOR CLEANOUT
FD	FLOOR DRAIN
FFA	FROM FLOOR ABOVE
FFB	FROM FLOOR BELOW
FIN	FINISHED
FLR	FLOOR
FM	FORCED MAIN
FPWH	FREEZEPROOF WALL HYDRANT
FS	FLOOR SINK
FT	FEET
G	NATURAL GAS
GAL	GALLON
GCO	GRADE CLEANOUT
GPH	GALLONS PER HOUR
GPM	GALLONS PER MINUTE
GWH	GAS WATER HEATER
H	HUMIDIFIER
HB	HOSE BIBB
HP	HORSEPOWER
HZ	HERTZ
IN	INCHES
L	LAVATORY
MAX	MAXIMUM
MCA	MINIMUM CIRCUIT AMPS
MIN	MINIMUM
MOCP	MINIMUM OVERCURRENT PROTECTION
MS	MOP SINK
NG	NATURAL GAS
NTS	NOT TO SCALE
ORD	OVERFLOW ROOF DRAIN
P****	PRESSURE
P****	PUMP
PDI	PLUMBING AND DRAINAGE INSTITUTE
PH	PHASE
PRV	PRESSURE REDUCING VALVE
PSI	POUNDS PER SQUARE INCH
PSIG	POUNDS PER SQUARE INCH - GAUGE
Q	QTY
RCP	RECIRCULATING PUMP
REF	REFERENCE
SAN	SANITARY SEWER
SD	STORM DRAIN
SH	SHOWER
SK	SINK
SP	SEWAGE EJECTOR GRINDER PUMP
SS	SERVICE SINK
SSD	SECONDARY STORM DRAIN
T	TEMPERATURE
T&P	TEMPERATURE & PRESSURE RELIEF VALVE
TFA	TO FLOOR ABOVE
TFP	TO FLOOR BELOW
TMV	THERMOSTATIC MIXING VALVE
TYP	TYPICAL
UG	UNDERGROUND
UR	URINAL
V****	VENT
V****	VOLT
VTR	VENT THROUGH ROOF
WC****	WATER CLOSET
WC****	WATER COLUMN
WCO	WALL CLEANOUT
WHA	WATER HAMMER ARRESTOR

NOTES:

A THIS LEGEND IS COMPOSED OF STANDARD ABBREVIATIONS AND APPLIES TO THE SET OF DRAWINGS TO THE EXTENT APPLICABLE.

B **** INDICATES MULTIPLE ABBREVIATIONS. REFER TO THE DRAWINGS FOR EXACT MEANING.

STANDARD PLUMBING SYMBOLS

GENERAL SYMBOLS

- DRAWING NOTE HEX
- CONNECT TO EXISTING
- DETAIL OUTLINE
- DETAIL OR SECTION BUBBLE (A / M3) — USE "LETTERS" FOR SECTIONS; USE "NUMBERS" FOR DETAILS; SHEET NUMBER WHERE SECTION/DETAIL IS SHOWN
- AHU-1 — EQUIPMENT MARK NUMBER
- ABV. — ABBREVIATION OF ITEM

PLUMBING SYMBOLS

- PIPE UP TO FIXTURE OR EQUIPMENT INDICATED
- R2 — ROOF LEADER/DOWNSPOUT NUMBER
- S1 — SANITARY WASTE STACK AND VENT NUMBER
- 1 — WATER ISOMETRIC NUMBER
- KITCHEN EQUIPMENT/LABORATORY EQUIPMENT NUMBER
- G — INTERCEPTOR W/ TYPE (G=GREASE; O=OIL)
- FLOOR PENETRATION LINE (ISOMETRIC)
- VENT THRU ROOF (ISOMETRIC)
- BACKWATER VALVE
- BACKFLOW PREVENTER (RP=REDUCED PRESSURE; DC=DUAL CHECK)
- FLOOR DRAIN W/ TRAP
- HUB DRAIN OUTLET W/ TRAP
- RUNNING TRAP W/ CLEANOUT
- FLOOR OR GRADE CLEANOUT
- CB-1 — CATCH BASIN W/ DESIGNATION
- MH-1 — MANHOLE W/ DESIGNATION
- ROOF DRAIN
- ROOF DRAIN W/ SCUPPER DRAIN
- COLD WATER
- HOT WATER
- HOT WATER RETURN
- HOT WATER WITH HEAT TRACE
- VENT PIPING
- (ABV) — PIPING ABOVE FLOOR OR GRADE (ABV=TYPE; SEE ABBREVIATIONS)
- (ABV) — PIPING BELOW FLOOR OR GRADE (ABV=TYPE; SEE ABBREVIATIONS)

PIPING SYMBOLS

- BALL VALVE
- BUTTERFLY VALVE
- GATE VALVE
- GLOBE VALVE
- GLOBE ANGLE VALVE
- GATE ANGLE VALVE
- RELIEF VALVE
- BALANCING VALVE
- CALIBRATED BALANCING VALVE
- PRESSURE REDUCING VALVE
- CHECK VALVE
- CHECK VALVE W/BALL DRIP
- O.S. & Y VALVE
- QUICK OPENING VALVE
- AAV — AUTOMATIC AIR VENT
- MAV — MANUAL AIR VENT
- AUTOMATIC FLOW CONTROL VALVE (SELF CONTAINED)
- STRAINER
- BLOW-OFF STRAINER
- UNION
- PRESSURE GAGE & COCK
- TW — THERMOMETER WELL
- CONCENTRIC REDUCER
- ECCENTRIC REDUCER
- FLEXIBLE CONNECTION
- PLUG VALVE
- THERMOMETER
- PRESSURE/TEMPERATURE PORT
- PIPE CAP
- ABV. — ABBREVIATION OF ITEM
- PIPE ELBOW DOWN
- PIPE ELBOW UP
- PIPE TEE DOWN
- PIPE TEE UP
- 45 DEGREE DROP
- ABV — ABBREVIATION OF PIPE CONTENTS
- A — ALIGNMENT GUIDE (A = TYPE)
- A — ANCHOR (A =TYPE)
- A — EXPANSION JOINT (A = TYPE)
- EXPANSION LOOP
- FLEXIBLE CONNECTOR
- R — PITCH OF PIPE (R = RISE; D = DROP) IN DIRECTION OF FLOW
- F & T — TRAP, STEAM W/ TYPE (F & T = FLOAT & THERMOSTAT; BT = BUCKET, TT = THERMOSTATIC)
- PUMP
- PSD — PUMP SUCTION DIFFUSER

NOTES:

A THIS LEGEND IS COMPOSED OF STANDARD SYMBOLS AND APPLIES TO THE SET OF DRAWINGS TO THE EXTENT APPLICABLE.

DEPARTMENT OF HOMELAND SECURITY

MARK	DESCRIPTION	DATE

DESIGNED BY: FYE
DRAWN BY: FYE
CHECKED BY: TOSSEY
SUBMITTED BY: HUTZEL
ISSUE DATE: MM-DD-YYYY
SOLICITATION NO.: 70CMSW22Q00000001
CONTRACT NO.: 70Z05018KZFNPL08
SIZE: ANSI D

US IMMIGRATION AND CUSTOMS ENFORCEMENT (ICE)
9455 BEE LINE HWY DRIVE
ORLANDO, FL 32827

KZF DESIGN
700 BROADWAY STREET
CINCINNATI, OH 45202

FT BENNING, GEORGIA
IMMIGRATION & CUSTOMS ENFORCEMENT (ICE)

SYMBOLS AND ABBREVIATIONS

SHEET ID
MCB
P-001

JAN 06, 2023 - FINAL SUBMITTAL (35%)

NOT FOR CONSTRUCTION

GENERAL NOTES
(APPLIES TO ALL 'P' SERIES SHEETS)

A ALL WORK AND EQUIPMENT SHALL CONFORM WITH THE REQUIREMENTS OF THE INTERNATIONAL BUILDING CODE, INTERNATIONAL PLUMBING CODE, FORT BENNING INSTALLATION FACILITY STANDARD, ALL APPLICABLE UFC'S, AND ALL LOCAL CODES.

B PLUMBING CONTRACTOR TO FIELD VERIFY ALL EXISTING CONDITIONS AT THE SITE PRIOR TO PERFORMING WORK. CONTRACTOR SHALL FIELD VERIFY EXISTING CONDITIONS AFFECTING THIS SCOPE OF WORK PRIOR TO PERFORMING WORK.

C PLUMBING CONTRACTOR RESPONSIBLE FOR ALL PERMITS, INSPECTIONS, AND FEES.

D THE PLUMBING CONTRACTORS AND EQUIPMENT SUPPLIERS SHALL COMPARE THE ELECTRICAL POWER REQUIREMENTS OF THE INTENDED AS SPECIFIED WITH THE POWER CHARACTERISTICS TO THE EQUIPMENT AS SHOWN ON THE ELECTRICAL DRAWINGS. SHOULD THE SELECTED EQUIPMENT AS FURNISHED BY THE CONTRACTOR REQUIRE A LARGER REVISION OF ITS BRANCH FEEDER, THE ADDED COSTS SHALL BE BORNE BY THE CONTRACTOR FURNISHING THE EQUIPMENT.

E ALL PLUMBING EQUIPMENT SHALL BE INSTALLED ACCORDING TO MANUFACTURER'S RECOMMENDATIONS.

F FURNISH ALL MATERIALS, EQUIPMENT AND INSTRUMENTS NECESSARY TO CONDUCT ALL TESTING OF PLUMBING PIPING SYSTEMS IN ACCORDANCE WITH THE PLUMBING CODE REGULATIONS.

G ALL PIPING ABOVE GRADE SHALL BE PROPERLY SUPPORTED BY THE BUILDING STRUCTURE AND SHALL NOT REST ON CEILING TILES OR CEILING STRUCTURE.

H ALL PIPES SHALL BE CONCEALED IN WALLS, ABOVE CEILING AND BELOW FLOORS. EXPOSED PIPING LOCATED ONLY AT FINAL CONNECTIONS TO EQUIPMENT AND FIXTURES UNLESS NOTED OTHERWISE.

I ROUTE PIPING IN EXPOSED AREAS AS HIGH AS POSSIBLE.

J PACK SLEEVES FULL AROUND PIPES PASSING THRU FLOORS AND FIRE-RATED WALLS AND PARTITIONS TO MAINTAIN THE FIRE OR SMOKE RATING OF THAT CONSTRUCTION. REFER TO SPECIFICATION SECTION 07 84 00 - FIRESTOPPING. REFER TO LIFE SAFETY DRAWINGS FOR FIRE AND SMOKE RATINGS OF ASSEMBLIES.

K PAINT EXTERIOR PLASTIC PIPING WITH UV RESISTANT PAINT.

L ALL HORIZONTAL STORM, SOIL AND WASTE PIPING SHALL BE PITCHED AT 1% MINIMUM UNLESS OTHERWISE NOTED. FOR NEW CONSTRUCTION OR RENOVATION PROJECTS USING HIGH EFFICIENCY (HET) WATER CLOSETS WITH A FLUSH VALVE 1.28 GPF OR LESS, PROVIDE A DRAIN LINE SLOPE GREATER THAN 1%

M FOR PURPOSES OF CLEARNESS AND LEGIBILITY, DRAWINGS ARE ESSENTIALLY DIAGRAMMATIC ALTHOUGH SIZE AND LOCATION OF EQUIPMENT ARE SHOWN TO SCALE WHEREVER POSSIBLE.

N REFER TO ISOMETRICS FOR PIPE SIZES NOT SHOWN IN DRAWINGS.

O TOPS OF ALL FLOOR DRAINS AND CLEANOUTS SHALL BE SET FLUSH WITH FINISHED FLOOR.

P CLEANOUTS SHALL BE THE SAME SIZE AS THE PIPING SERVED BY THE CLEANOUT, EXCEPT FOR CLEANOUTS ON PIPING LARGER THAN 4 INCHES WHICH DO NOT NEED TO BE LARGER THAN 4 INCHES; UNLESS OTHERWISE NOTED. CLEANOUTS LOCATED ON STACKS CAN BE ONE SIZE SMALLER THAN THE STACK SIZE; UNLESS OTHERWISE NOTED.

Q INSTALL WATER HAMMER ARRESTORS AS INDICATED ON DRAWINGS AND AS REQUIRED BY CODE.

R THE PLUMBING CONTRACTOR SHALL COORDINATE THE ROUTING OF ALL PIPING WITH THE LOCATIONS OF THE LIGHT FIXTURES, STRUCTURAL, CEILING HEIGHTS, DUCTWORK, CABLE TRAY, AND THE WORK OF ALL OTHER TRADES TO AVOID CONFLICTS.

S COORDINATE PIPE ROUTING AWAY FROM ELECTRICAL PANELS, ELECTRICAL ROOMS, AND TELECOMMUNICATIONS ROOMS. DO NOT INSTALL PIPING OVER ELECTRICAL PANELS.

T REFER TO ARCHITECTURAL DRAWING GENERAL NOTES FOR PERTINENT INFORMATION.

U OPEN ENDS OF NEW PIPING LINES SHALL BE TEMPORARILY CAPPED OR PLUGGED DURING CONSTRUCTION TO PREVENT ENTRY OF DIRT OR FOREIGN MATERIALS.

V DURING CONSTRUCTION, DO NOT STORE PLASTIC PIPING WHERE IT WILL BE EXPOSED TO SUNLIGHT.

W PAINT ALL NATURAL GAS PIPING WITH RUST INHIBITING PAINT.

X ALL PLUMBING EQUIPMENT, PIPING INSULATION, ETC. INSTALLED IN HVAC PLENUM SPACES SHALL MEET CODE REQUIREMENTS FOR SMOKING AND COMBUSTIBILITY.

Y CONTRACTOR SHALL PROVIDE MANUAL AIR VENTS AT ALL HIGH POINTS AND DRAINS AT ALL LOW POINTS IN HOT WATER SYSTEM. ALL AIR VENTS SHALL BE PIPED TO DRAINS.

WATER FLOW TEST INFORMATION

DATE OF TEST	2022-AUG-29
TIME OF TEST	10:XX AM
TEST PERFORMED BY	JENSEN HUGHES / COLUMBUS WATER
TEST STATIC PRESSURE (PSI)	85
TEST RESIDUAL PRESSURE (PSI)	79
TEST FLOW AT RESIDUAL PRESSURE (GPM)	1160
TEST PITOT READING (PSI)	50
TEST FLOW @ 20 PSI	4200

MARK	DESCRIPTION	DATE

DESIGNED BY: FYE
DRAWN BY: FYE
CHECKED BY: TOSSEY
SUBMITTED BY: HUTZEL
SIZE: ANSI D
ISSUE DATE: MM-DD-YYYY
SOLICITATION NO.: 70CMSW22Q00000001
CONTRACT NO.: 70Z05018DKZFNPL08

US IMMIGRATION AND CUSTOMS ENFORCEMENT (ICE)
9465 SELDEN FIELD DRIVE
ORLANDO, FL 32837

KZF DESIGN
700 BROADWAY STREET
CINCINNATI, OH 45202

FT BENNING, GEORGIA
IMMIGRATION & CUSTOMS ENFORCEMENT (ICE)

GENERAL NOTES

SHEET ID
MCB
P-002

JAN 06, 2023 - FINAL SUBMITTAL (35%)

NOT FOR CONSTRUCTION

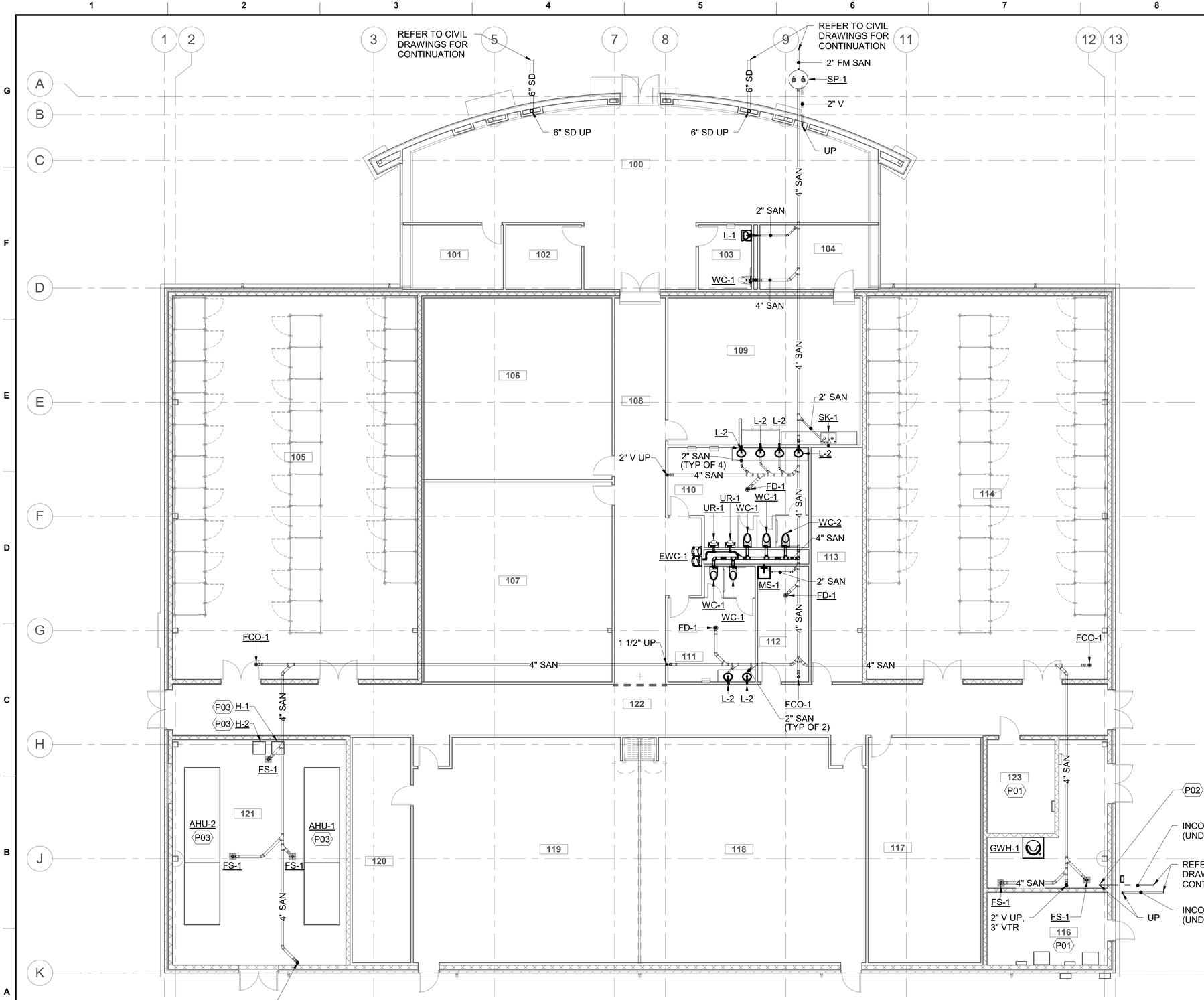

01 P-101 **UNDERGROUND PIPING PLAN**
1/8" = 1'-0"

ROOM SCHEDULE	
NUMBER	NAME
100	LOBBY
101	COUSELING
102	OFFICE
103	UNISEX RESTROOM
104	WORK ROOM / ADMIN STOR
105	GEAR LOCKER ROOM
106	TEAM ROOM
107	TEAM ROOM
108	CORRIDOR
109	BREAKROOM
110	MEN
111	WOMEN
112	JANITOR
113	STORAGE
114	GEAR LOCKER ROOM
115	MECHANICAL
116	MECH / ELECT
117	CONFERENCE
118	CLASSROOM
119	CLASSROOM
120	CONTROL/ STORAGE
121	MECHANICAL
122	CORRIDOR
123	TEL/COM

DRAWING NOTES

P01 DO NOT RUN PIPING THROUGH OR ABOVE ELECTRICAL OR TELECOMMUNICATIONS ROOMS UNLESS SERVING THOSE ROOMS.

P02 ALL PENETRATIONS THRU FLOOR, EXTERIOR WALL, AND ROOF TO BE WATER TIGHT.

P03 GAS-FIRED MECHANICAL EQUIPMENT PROVIDED UNDER MECHANICAL WORK. REFER TO MECHANICAL "M" SERIES DRAWINGS FOR MORE INFORMATION.

0 4' 8' 16'
SCALE: 1/8"=1'-0"

MARK | DESCRIPTION | DATE

ISSUE DATE: MM-DD-YYYY
SOLICITATION NO.: 70CMSW22Q00000001
CONTRACT NO.: 70Z05018DKZFNPL08

DESIGNED BY: FYE
DRAWN BY: FYE
CHECKED BY: TOSSEY
SUBMITTED BY: HUTZEL
SIZE: ANSI D

US IMMIGRATION AND CUSTOMS ENFORCEMENT (ICE)
9495 DELEGATED DRIVE
ORLANDO, FL 32837

KZF DESIGN
700 BROADWAY STREET
CINCINNATI, OH 45202

FT BENNING, GEORGIA
IMMIGRATION & CUSTOMS ENFORCEMENT (ICE)

FLOOR PLANS

SHEET ID
MCB
P-101

JAN 06, 2023 - FINAL SUBMITTAL (35%)

NOT FOR CONSTRUCTION

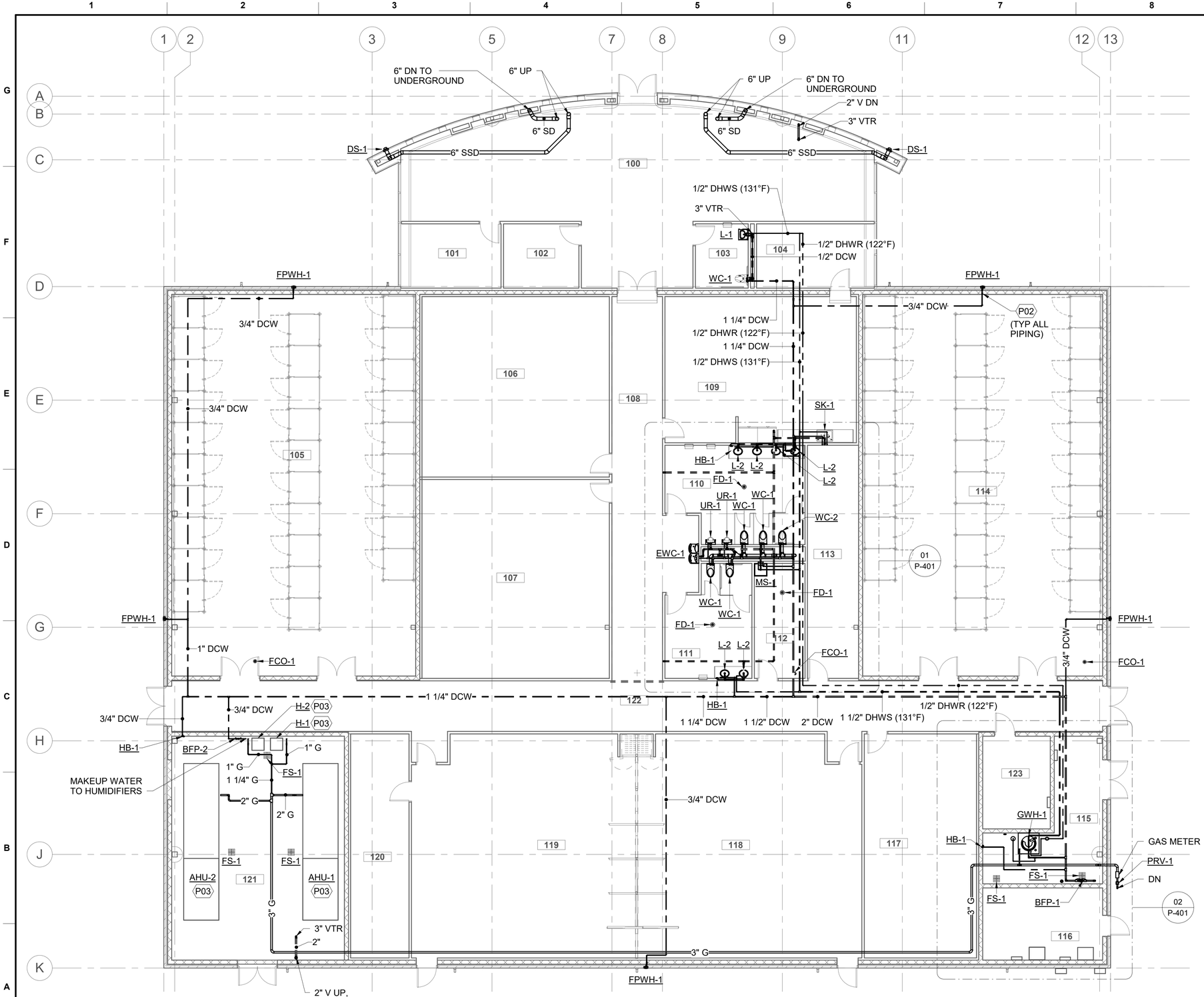

01 P-102 **FIRST FLOOR PIPING PLAN**
1/8" = 1'-0"

ROOM SCHEDULE	
NUMBER	NAME
100	LOBBY
101	COUSELING
102	OFFICE
103	UNISEX RESTROOM
104	WORK ROOM / ADMIN STOR
105	GEAR LOCKER ROOM
106	TEAM ROOM
107	TEAM ROOM
108	CORRIDOR
109	BREAKROOM
110	MEN
111	WOMEN
112	JANITOR
113	STORAGE
114	GEAR LOCKER ROOM
115	MECHANICAL
116	MECH / ELECT
117	CONFERENCE
118	CLASSROOM
119	CLASSROOM
120	CONTROL/ STORAGE
121	MECHANICAL
122	CORRIDOR
123	TEL/COM

DRAWING NOTES

P02 ALL PENETRATIONS THRU FLOOR, EXTERIOR WALL, AND ROOF TO BE WATER TIGHT.

P03 GAS-FIRED MECHANICAL EQUIPMENT PROVIDED UNDER MECHANICAL WORK. REFER TO MECHANICAL "M" SERIES DRAWINGS FOR MORE INFORMATION.

0 4' 8' 16'
SCALE: 1/8"=1'-0"

MARK | DESCRIPTION | DATE

ISSUE DATE: MM-DD-YYYY
SOLICITATION NO.: 70CMSW22Q00000001
CONTRACT NO.: 70Z05018DKZFNPL08

DESIGNED BY: FYE
DRAWN BY: FYE
CHECKED BY: TOSSEY
SUBMITTED BY: HUTZEL
SIZE: ANSI D

US IMMIGRATION AND CUSTOMS ENFORCEMENT (ICE)
9495 DELEGATED DRIVE
ORLANDO, FL 32837

KZF DESIGN
700 BROADWAY STREET
CINCINNATI, OH 45202

FT BENNING, GEORGIA
IMMIGRATION & CUSTOMS ENFORCEMENT (ICE)

FLOOR PLANS

SHEET ID
MCB
P-102

JAN 06, 2023 - FINAL SUBMITTAL (35%)

NOT FOR CONSTRUCTION

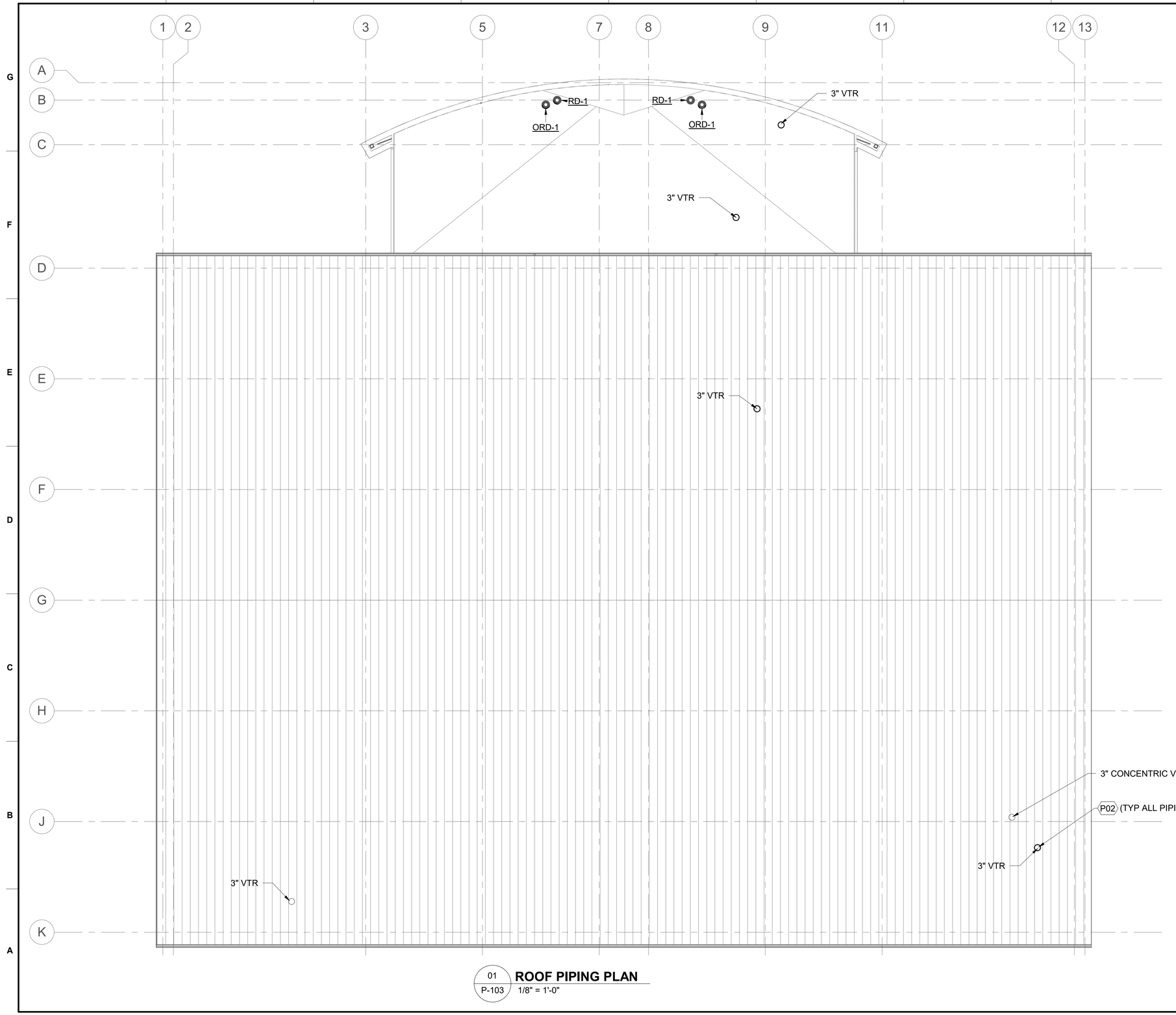

01 P-103 **ROOF PIPING PLAN**
1/8" = 1'-0"

DRAWING NOTES

P02 ALL PENETRATIONS THRU FLOOR, EXTERIOR WALL, AND ROOF TO BE WATER TIGHT.

N

0 4' 8' 16'
SCALE: 1/8"=1'-0"

MARK	DESCRIPTION	DATE

DESIGNED BY: FYE
DRAWN BY: FYE
CHECKED BY: TOSSEY
SUBMITTED BY: HUTZEL
SIZE: ANSI D
ISSUE DATE: MM-DD-YYYY
SOLICITATION NO.: 70CMSW22Q00000001
CONTRACT NO.: 70Z05018DKZFNPL08

US IMMIGRATION AND CUSTOMS ENFORCEMENT (ICE)
9495 DELEGATED DRIVE
ORLANDO, FL 32837

KZF DESIGN
700 BROADWAY STREET
CINCINNATI, OH 45202

FT BENNING, GEORGIA
IMMIGRATION & CUSTOMS ENFORCEMENT (ICE)

FLOOR PLANS

SHEET ID
MCB
P-103

JAN 06, 2023 - FINAL SUBMITTAL (35%)

NOT FOR CONSTRUCTION

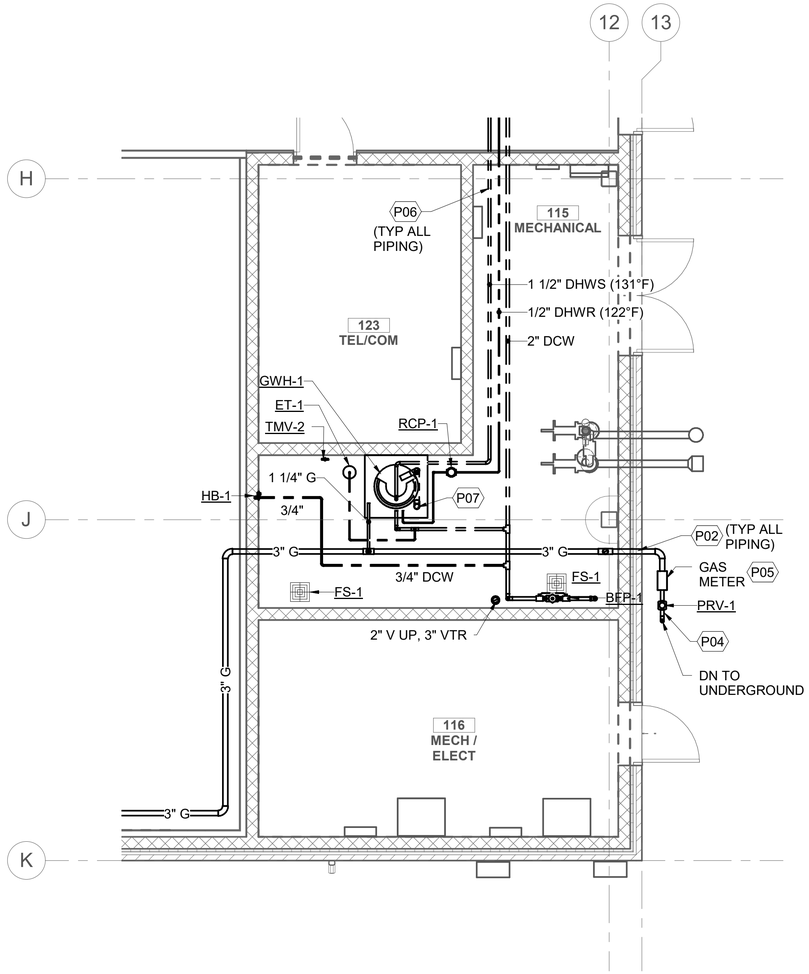

02 P-401 **ENLARGED MECHANICAL ROOM PLAN**
1/4" = 1'-0"

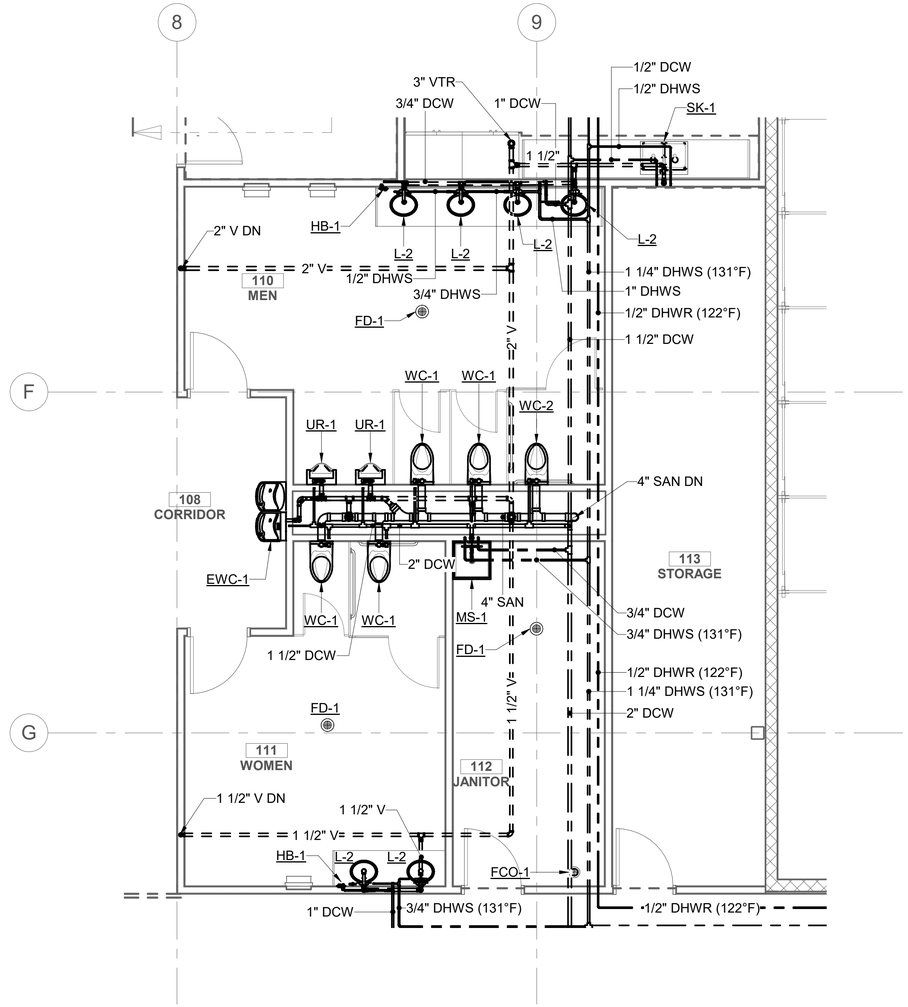

01 P-401 **ENLARGED TOILET ROOM PLAN**
1/4" = 1'-0"

ROOM SCHEDULE	
NUMBER	NAME
100	LOBBY
101	COUSELING
102	OFFICE
103	UNISEX RESTROOM
104	WORK ROOM / ADMIN STOR
105	GEAR LOCKER ROOM
106	TEAM ROOM
107	TEAM ROOM
108	CORRIDOR
109	BREAKROOM
110	MEN
111	WOMEN
112	JANITOR
113	STORAGE
114	GEAR LOCKER ROOM
115	MECHANICAL
116	MECH / ELECT
117	CONFERENCE
118	CLASSROOM
119	CLASSROOM
120	CONTROL/ STORAGE
121	MECHANICAL
122	CORRIDOR
123	TEL/COM

DRAWING NOTES

P02 ALL PENETRATIONS THRU FLOOR, EXTERIOR WALL, AND ROOF TO BE WATER TIGHT.

P04 PROVIDE CORROSION RESISTANT FINISH ON EXTERIOR GAS PIPING.

P05 PROVIDE LOCKABLE, VENTED, STAINLESS STEEL ENCLOSURE CONTAINING BOTH GAS PRESSURE REGULATOR AND GAS METER. REFER TO DETAIL 02/P-501.

P06 DO NOT RUN PIPING OVER ELECTRICAL EQUIPMENT. MAINTAIN CODE REQUIRED ELECTRICAL CLEARANCE IN FRONT OF ELECTRICAL EQUIPMENT.

P07 3" AIR INTAKE AND 3" VENT UP TO CONCENTRIC VENT. REFER TO DETAIL 07/P-503.

N

0 2' 4' 8'
SCALE: 1/4"=1'-0"

MARK	DESCRIPTION	DATE

ISSUE DATE: MM-DD-YYYY
SOLICITATION NO.: 70CMSW22Q00000001
CONTRACT NO.: 70Z05018DKZFNPL08

DESIGNED BY: FYE
DRAWN BY: FYE
CHECKED BY: TOSSEY
SUBMITTED BY: HUTZEL
SIZE: ANSI D

US IMMIGRATION AND CUSTOMS ENFORCEMENT (ICE)
9495 DELEGATED DRIVE
ORLANDO, FL 32837

KZF DESIGN
700 BROADWAY STREET
CINCINNATI, OH 45202

FT BENNING, GEORGIA
IMMIGRATION & CUSTOMS ENFORCEMENT (ICE)

ENLARGED PLANS

SHEET ID
MCB
P-401

JAN 06, 2023 - FINAL SUBMITTAL (35%)

NOT FOR CONSTRUCTION

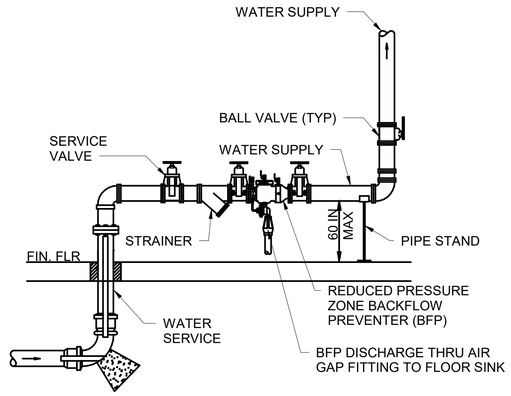

07 / P-501 **WATER SERVICE RISER - INCOMING**
NTS

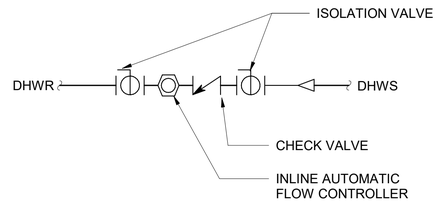

05 / P-501 **DHWR RETURN CONNECTION**
NTS

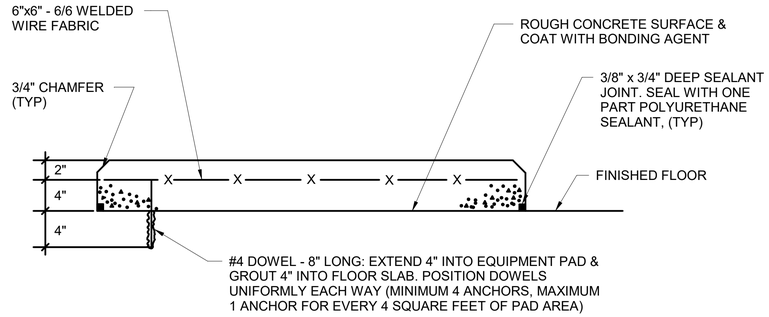

NOTE:
EQUIPMENT PAD SHALL BE 6" LARGER THAN SUPPORTED EQUIPMENT ON EACH SIDE.

03 / P-501 **6 INCH EQUIPMENT PAD W/SEALANT**
NTS

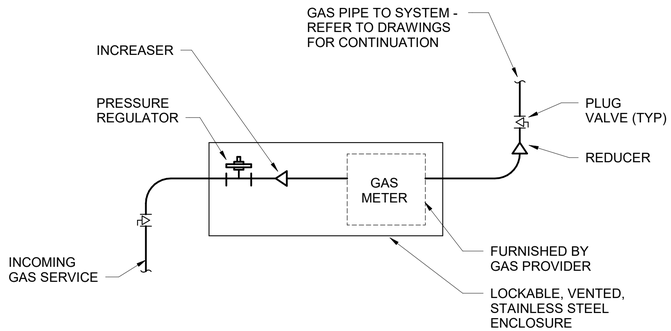

02 / P-501 **CONNECTION AT GAS METER**
NTS

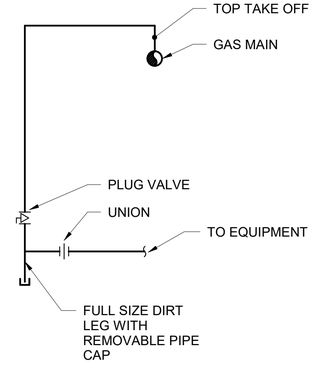

06 / P-501 **GAS LINE DROP**
NTS

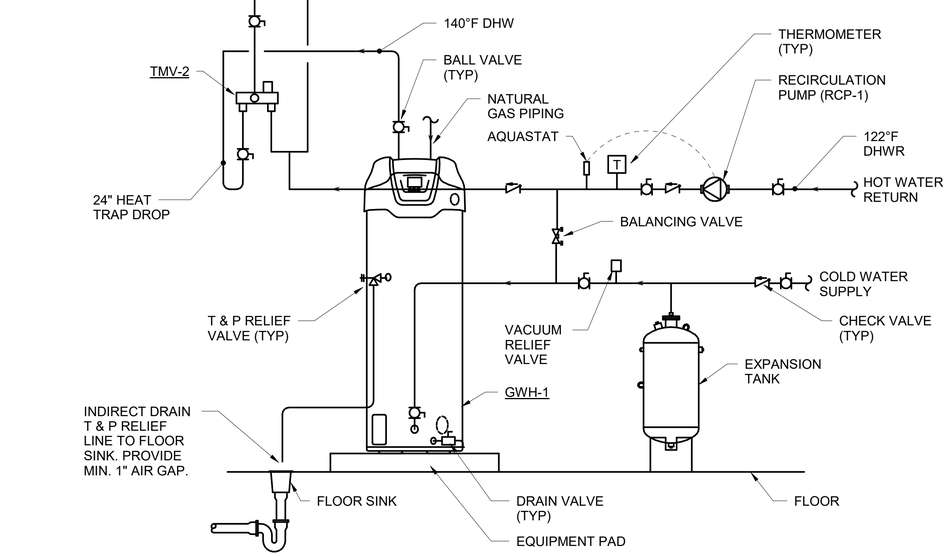

04 / P-501 **GAS WATER HEATER**
NTS

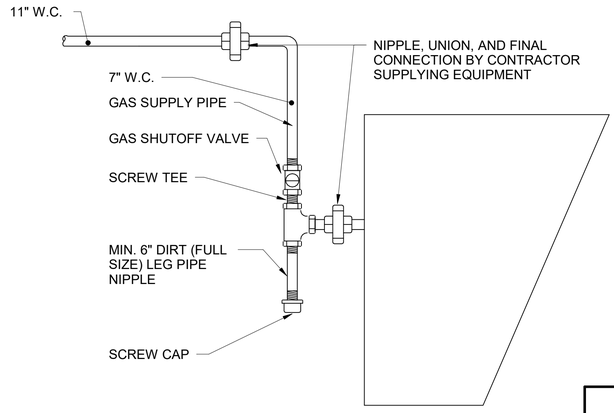

01 / P-501 **GAS EQUIPMENT CONNECTION**
NTS

MARK	DESCRIPTION	DATE

DESIGNED BY: FYE
DRAWN BY: FYE
CHECKED BY: TOSSEY
SUBMITTED BY: HUTZEL
SIZE: ANSI D
ISSUE DATE: MM-DD-YYYY
SOLICITATION NO.: 70CMSW22Q00000001
CONTRACT NO.: 70Z05018KZFNPL08

US IMMIGRATION AND CUSTOMS ENFORCEMENT (ICE)
940 FIDELITY DRIVE
ORLANDO, FL 32837

KZF DESIGN
700 BROADWAY ST STREET
CINCINNATI, OH 45202

FT BENNING, GEORGIA
IMMIGRATION & CUSTOMS ENFORCEMENT (ICE)

DETAILS

SHEET ID
MCB
P-501

JAN 06, 2023 - FINAL SUBMITTAL (35%)

NOT FOR CONSTRUCTION

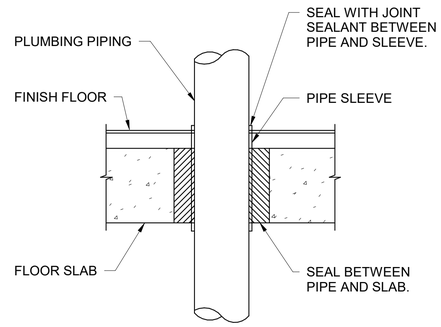

04 / P-502 **PIPE PENETRATION THROUGH SLAB**
NTS

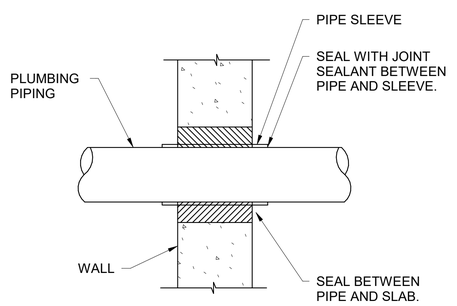

03 / P-502 **PIPE PENETRATION THRU WALL**
NTS

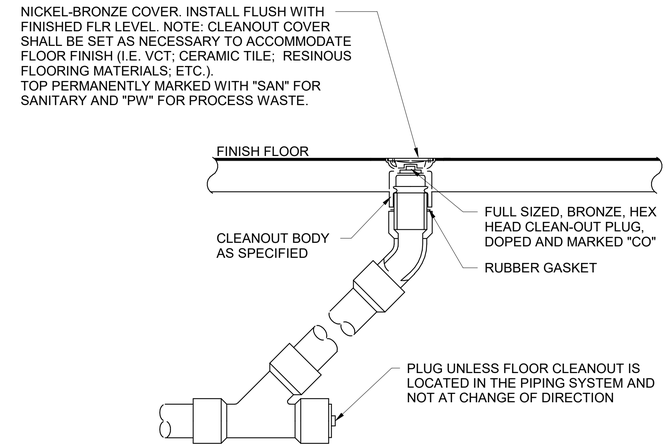

06 / P-502 **FLOOR CLEANOUT DETAIL**
NTS

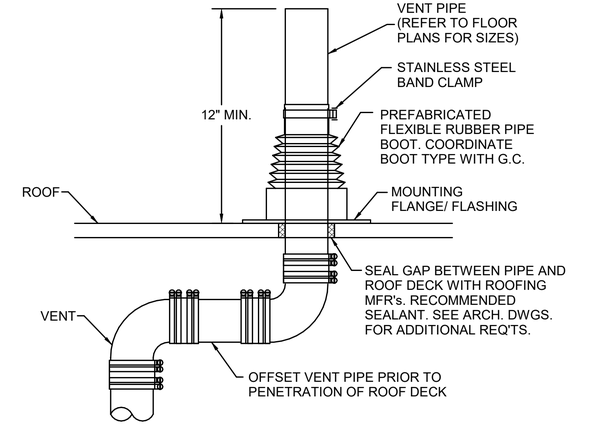

NOTE:
1. VENT SHALL BE LOCATED A MIN. OF 15'-0" FROM ANY FRESH AIR INTAKE.
2. MINIMUM VENT HEIGHT ABOVE ROOF SHALL BE 12".
3. SEE ARCHITECTURAL DWG. DETAILS FOR SPECIFIC ROOFING & FINISH REQ'TS.
4. WHERE ADJACENT TO SCREENWALL EXTEND VENT TO FLUSH WITH TOP OF WALL.

02 / P-502 **VENT THRU ROOF DETAIL W/OFFSET**
NTS

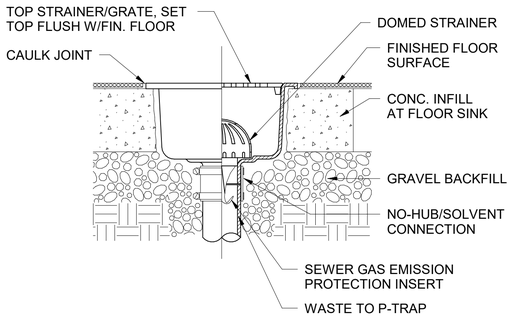

NOTE:
FLOOR SINK SHALL BE SET FLUSH WITH FINISHED FLOOR. DO NOT SWALE FLOOR AREA.

07 / P-502 **FLOOR SINK**
NTS

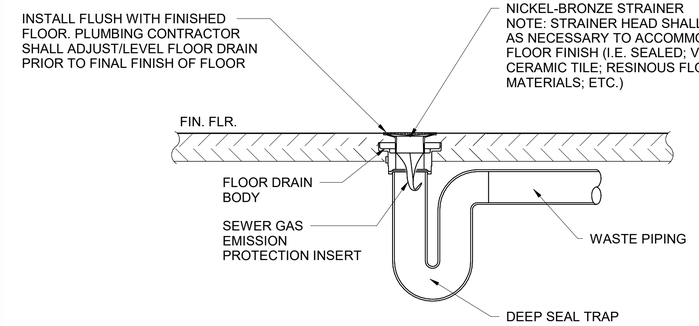

NOTE:
SEE MFR. FOR TRAP SEAL DEVICE INSTALLATION REQUIREMENTS

05 / P-502 **FLOOR DRAIN INSTALLATION**
NTS

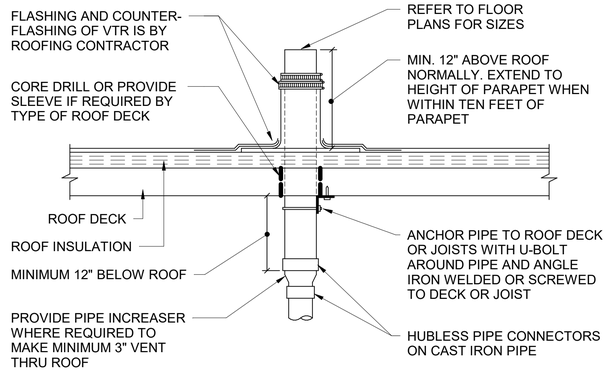

NOTE:
1. VENT SHALL BE LOCATED A MIN. OF 15'-0" FROM ANY FRESH AIR INTAKE.
2. MINIMUM VENT HEIGHT ABOVE ROOF SHALL BE 12".
3. SEE ARCHITECTURAL DWG. DETAILS FOR SPECIFIC ROOFING & FINISH REQ'TS.
4. WHERE ADJACENT TO SCREENWALL EXTEND VENT TO FLUSH WITH TOP OF WALL.

01 / P-502 **VENT THRU ROOF DETAIL**
NTS

MARK	DESCRIPTION	DATE

DESIGNED BY: FYE
DRAWN BY: FYE
CHECKED BY: TOSSEY
SUBMITTED BY: HUTZEL
SIZE: ANSI D
ISSUE DATE: MM-DD-YYYY
SOLICITATION NO.: 70CMSW22Q00000001
CONTRACT NO.: 70Z05018KZFNPL08

US IMMIGRATION AND CUSTOMS ENFORCEMENT (ICE)
9450 LEE GATOR DRIVE
ORLANDO, FL 32837

KZF DESIGN
700 BROADWAY STREET
CINCINNATI, OH 45202

FT BENNING, GEORGIA
IMMIGRATION & CUSTOMS ENFORCEMENT (ICE)

DETAILS

SHEET ID
MCB
P-502

JAN 06, 2023 - FINAL SUBMITTAL (35%)

NOT FOR CONSTRUCTION

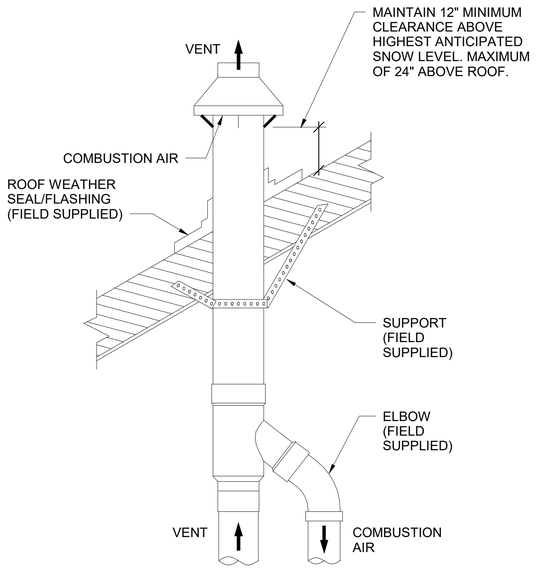

07 P-503 **ROOF CONCENTRIC PVC VENT**
NTS

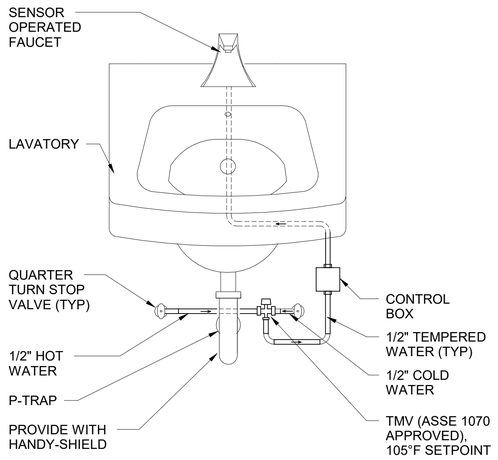

05 P-503 **WALL MOUNTED LAVATORY**
NTS

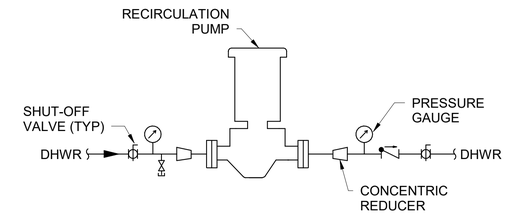

NOTES:
1. PIPE SUPPORTS NOT SHOWN: INSTALL AND SUPPORT PER MANUFACTURER'S RECOMMENDATIONS.

03 P-503 **RECIRCULATION PUMP**
NTS

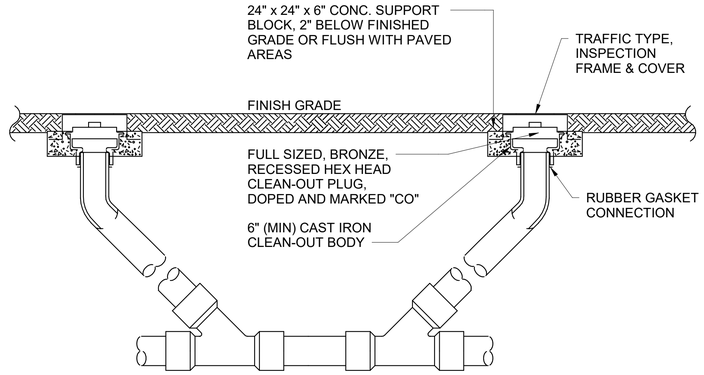

02 P-503 **2-WAY YARD CLEANOUT DETAIL**
NTS

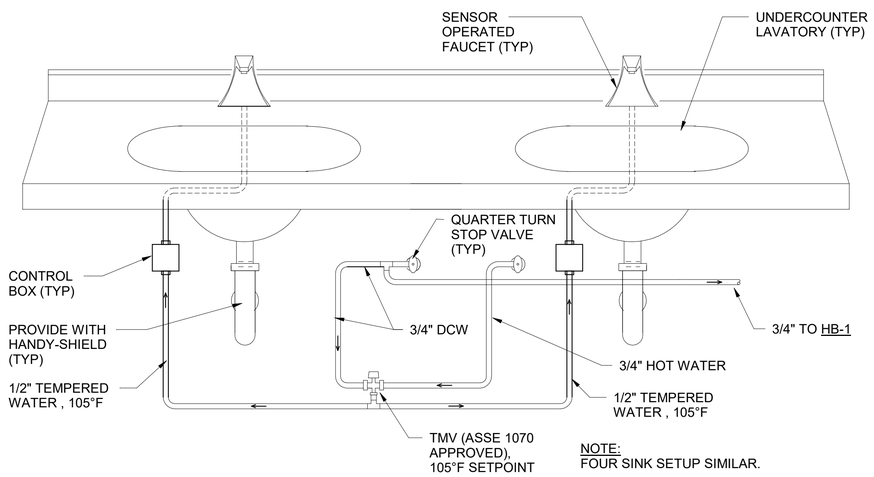

NOTE:
FOUR SINK SETUP SIMILAR.

06 P-503 **COUNTER MOUNTED LAVATORY**
NTS

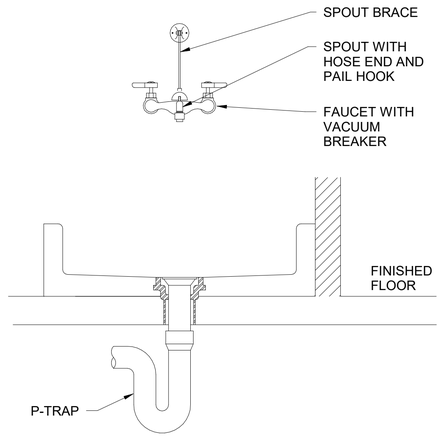

04 P-503 **MOP SINK**
NTS

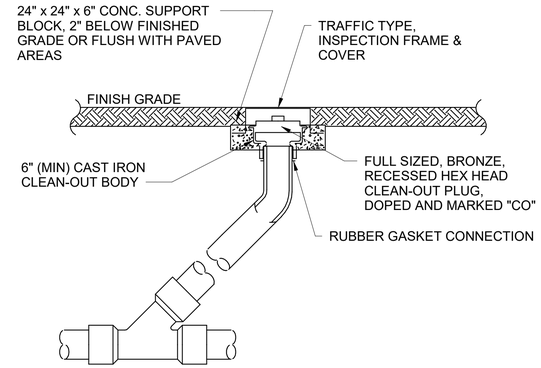

01 P-503 **YARD CLEANOUT DETAIL**
NTS

MARK	DESCRIPTION	DATE

DESIGNED BY: FYE
DRAWN BY: FYE
CHECKED BY: TOSSEY
SUBMITTED BY: HUTZEL
SIZE: ANSI D
ISSUE DATE: MM-DD-YYYY
SOLICITATION NO.: 70CMSW22Q00000001
CONTRACT NO.: 70Z05018DKZFNPL08

US IMMIGRATION AND CUSTOMS ENFORCEMENT (ICE)
9495 DELEGATED DRIVE
ORLANDO, FL 32837

KZF DESIGN
700 BROADWAY STREET
CINCINNATI, OH 45202

FT BENNING, GEORGIA
IMMIGRATION & CUSTOMS ENFORCEMENT (ICE)

DETAILS

SHEET ID
MCB
P-503

JAN 06, 2023 - FINAL SUBMITTAL (35%)

NOT FOR CONSTRUCTION

BACKFLOW PREVENTER SCHEDULE

MARK	BASIS OF DESIGN		DCW SYSTEM	SIZE (IN)	COMMENTS
	MANUFACTURER	MODEL			
BFP-1	WATTS	LF009	DOMESTIC COLD WATER	2	01 02 03 04 05
BFP-2	WATTS	LF009	HVAC MAKEUP WATER	3/4	01 03 05

01 PROVIDE WITH QUARTER TURN BALL VALVES.

02 LEAD FREE CONSTRUCTION.

03 ASSE 1013, REDUCED PRESSURE TYPE.

04 PROVIDE WITH AIR GAP ACCESSORY.

05 PROVIDE BASIS OF DESIGN OR EQUAL.

EXPANSION TANK SCHEDULE

MARK	MANUFACTURER	MODEL	TANK VOLUME (GAL)	TANK ACCEPT VOLUME	SYSTEM	COMMENTS
ET-1	THERM-X-TROL	ST-12C-DD	6.4	0.50	DOMESTIC WATER	01 02

01 PROVIDE ASME RATED DIAPHRAGM TYPE EXPANSION TANK WITH 150 PSIG MAX WORKING PRESSURE AND 200°F MAX OPERATING TEMPERATURE. INSTALL PER MANUFACTURERS RECOMMENDATIONS.

02 PROVIDE BASIS OF DESIGN OR EQUAL.

GAS PRESSURE REGULATOR VALVE SCHEDULE

MARK	SERVES	DESIGN FLOW RATE (CFH)	PRESSURE INLET (PSIG)	PRESSURE OUTLET (IN. WC.)	COMMENTS
PRV-1	BUILDING	1042	2	11	01

01 COORDINATE WITH BASE UTILITIES FOR INLET GAS PRESSURE AND PIPE SIZE TO BUILDING.

WATER HAMMER ARRESTOR SCHEDULE

MARK	MANUFACTURER	MODEL NO.	SIZE (IN)	REF. PDI STANDARD	CROSS FIXTURE UNITS	COMMENTS
WHA-1	WATTS	LF15M2-B	3/4"	B	12-32	01 02
WHA-2	WATTS	LF15M2-D	1"	D	61-113	01 02

01 PROVIDE THREADED TYPE.

02 PROVIDE BASIS OF DESIGN OR EQUAL.

THERMOSTATIC MIXING VALVE SCHEDULE

MARK	MANUFACTURER	MODEL	SIZE	TEMPERATURE SETPOINT	MAX / MIN (GPM) @ 20 PSI PRESSURE DROP	COMMENTS
TMV-1	BRADLEY	S59-4000	1/2"	105°F	3.5 / 0.20	01 02
TMV-2	BRADLEY			131°F		02 03

01 PROVIDE AT LAVATORIES (L-1, L-2) AND SINKS (SK-1).

02 PROVIDE BASIS OF DESIGN OR EQUAL.

03 PROVIDE FOR GWH-1.

PLUMBING FIXTURE SCHEDULE W/FIXTURE FLOW RATE

MARK	DESCRIPTION	FIXTURE FLOW RATE	NOMINAL PIPE SIZE (INCHES)				COMMENTS
			DCW	DHW	SANITARY	VENT	
DS-1	DOWNSPOUT						
EWC-1	BI-LEVEL ELECTRIC WATER COOLER WITH BOTTLE FILLER		1/2"		1 1/2"	1 1/2"	01
FCO-1	FLOOR CLEANOUT						
FD-1	FLOOR DRAIN						
FPWH-1	FREEZE PROOF WALL HYDRANT		3/4"				01
FS-1	FLOOR SINK						
HB-1	HOSE BIBB		3/4"				01
L-1	WALL HUNG LAVATORY	0.5 GPM	1/2"	1/2"	1 1/2"	1 1/2"	01 03
L-2	COUNTER MOUNT LAVATORY	0.5 GPM	1/2"	1/2"	1 1/2"	1 1/2"	01 03
MS-1	MOP SINK	1.5 GPM	3/4"	3/4"	2"	1 1/2"	01 04
ORD-1	OVERFLOW ROOF DRAIN						6"ø STORM
RD-1	ROOF DRAIN						6"ø STORM
SK-1	UNDER COUNTER MOUNT SINK	1.5 GPM	1/2"	1/2"	2"	1 1/2"	01 02
UR-1	WALL MOUNT URINAL	0.125 GPF	3/4"		2"	1 1/2"	01 05
WC-1	WALL HUNG WATER CLOSET	1.28 GPF	1"		4"	2"	01 05
WC-2	WALL HUNG WATER CLOSET	1.28 GPF	1"		4"	2"	01 05 ADA

01 ALL FIXTURES SHALL BE WATER CONSERVATION TYPE IN ACCORDANCE WITH THE INTERNATIONAL PLUMBING CODE.

02 PROVIDE WITH MANUAL TOP MOUNT PULL DOWN SPRAY-FAUCET WITH LEVER HANDLE. LEAD FREE.

03 PROVIDE WITH SENSOR ACTIVATED TOP MOUNT FAUCET. HARDWIRED. LEAD FREE.

04 PROVIDE WITH MANUAL EXPOSED YOKE WALL MOUNT UTILITY FAUCET WITH LEVER HANDLES, TOP BRACE, VACUUM BREAKER, 3/4" THREADED HOSE END AND BUCKET HOOK. LEAD FREE.

05 SENSOR ACTIVATED FIXTURE. HARDWIRED.

GAS WATER HEATER SCHEDULE

MARK	MANUFACTURER	MODEL	TANK VOLUME (GAL)	HEATING CAPACITY (GPH)	INPUT HEAT (BTUH)	TEMPERATURE RISE (°F)	FUEL	THERMAL EFFICIENCY (%)	COMMENTS
GWH-1	A.O SMITH	BTH-120	60	154	120,000	90	NATURAL GAS	95	01 02 03 04

01 GAS SUPPLY PRESSURE: MINIMUM 3.5" W.C., MAXIMUM 14" W.C.

02 PROVIDE WITH CONCENTRIC VENT KIT, CONDENSATE NEUTRALIZATION KIT, AND LOW WATER CUT OFF.

03 150 PSI WORKING PRESSURE ASME RATED WITH T&P RELIEVE VALVE.

04 PROVIDE BASIS OF DESIGN OR EQUAL.

RECIRCULATION PUMP SCHEDULE

MARK	MANUFACTURER	MODEL	TYPE	FLUID FLOW RATE (GPM)	HEAD LOSS (FT.)	MOTOR DATA				COMMENTS
						HP	VOLTAGE	PHASE	HZ	
RCP-1	BELL & GOSSETT	PL-36	CIRCULATOR	0.5 GPM	1.25	1/6	208 V	1	60 Hz	01 02 03

01 LEAD FREE CONSTRUCTION.

02 PROVIDE WITH BUILT-IN TEMPERATURE SENSORS.

03 PROVIDE BASIS OF DESIGN OR EQUAL.

SEWAGE EJECTOR PUMP SCHEDULE

MARK	MANUFACTURER	DESCRIPTION	PUMP MODEL	PUMP ELECTRICAL DATA				DESIGN FLOW (GPM)	DESIGN HEAD (FT.)	BASIN TYPE	NOTES
				HP	VOLTAGE	PHASE	HZ				
SP-1	ZOELLER	DUPLEX GRINDER PUMP SYSTEM	G818	1	460 V	3	60 Hz	42	10	FIBERGLASS	01 02 03 04

01 PROVIDE BASIS OF DESIGN OR EQUAL.

02 PUMP INFORMATION FOR SINGLE PUMP. SYSTEM CONTAINS TWO PUMPS WITH N+1 OPERATION.

03 PREFABRICATED LIFT STATION WITH RAILS.

04 PROVIDE WITH NEMA 4X CONTROL PANEL.

DATE | DESCRIPTION | MARK

DESIGNED BY: FYE
DRAWN BY: FYE
CHECKED BY: TOSSEY
SUBMITTED BY: HUTZEL
SIZE: ANSI D
ISSUE DATE: MM-DD-YYYY
SOLICITATION NO.: 70CMSW22Q00000001
CONTRACT NO.: 70Z05018KZFNPL08

US IMMIGRATION AND CUSTOMS ENFORCEMENT (ICE)
9455 EXCELLENCE DRIVE
ORLANDO, FL 32837

KZF DESIGN
709 RODNEY RAY STREET
CINCINNATI, OH 45202

FT BENNING, GEORGIA
IMMIGRATION & CUSTOMS ENFORCEMENT (ICE)

SCHEDULES

SHEET ID
MCB
P-601

JAN 06, 2023 - FINAL SUBMITTAL (35%)

NOT FOR CONSTRUCTION

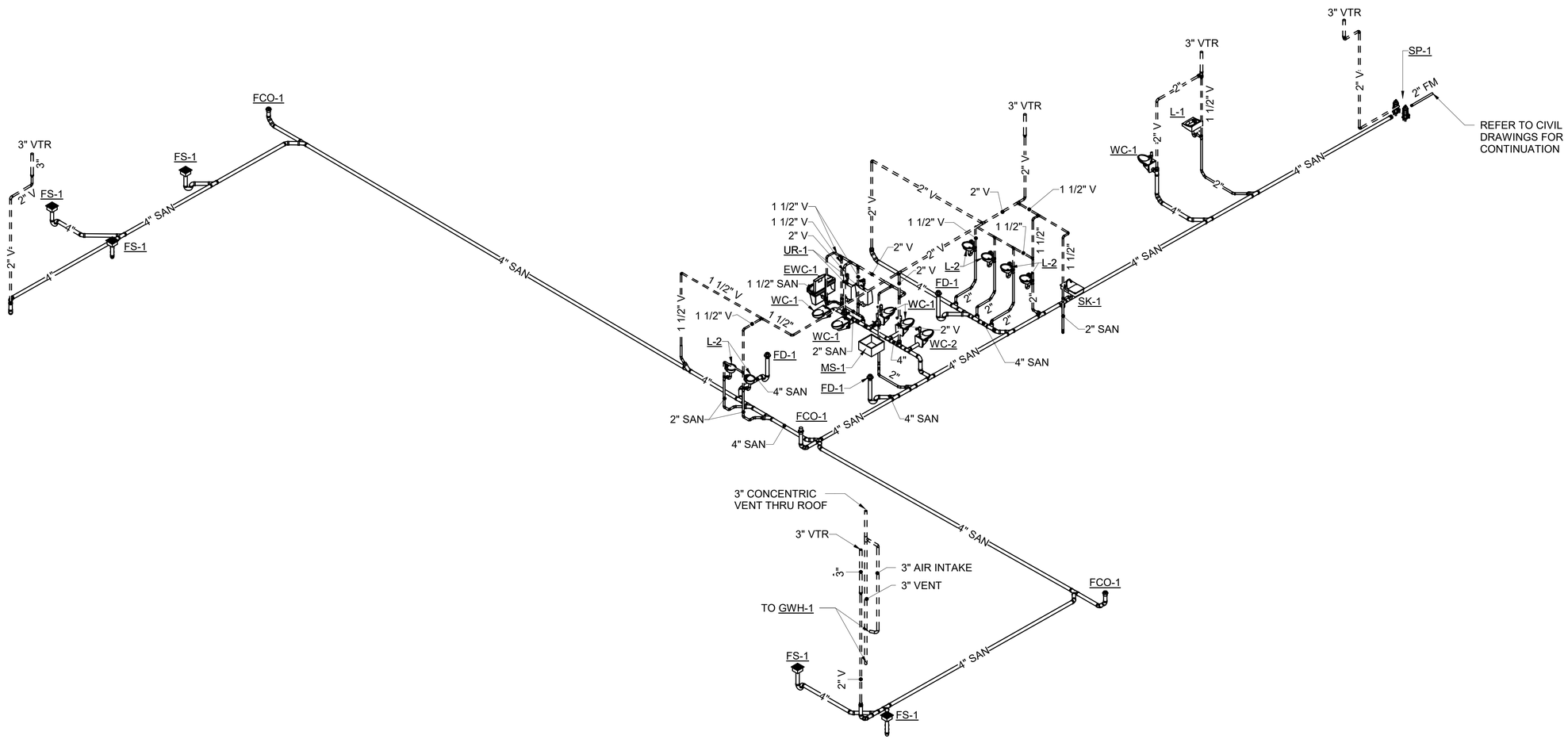

01 P-901 **SANITARY AND VENT ISOMETRIC**
NTS

MARK	DESCRIPTION	DATE

DESIGNED BY: FYE
DRAWN BY: FYE
CHECKED BY: TOSSEY
SUBMITTED BY: HUTZEL
SIZE: ANSI D
ISSUE DATE: MM-DD-YYYY
SOLICITATION NO.: 70CMSW22Q00000001
CONTRACT NO.: 70Z05018DKZFNPL08

US IMMIGRATION AND CUSTOMS ENFORCEMENT (ICE)
9495 DELEGATED DRIVE
ORLANDO, FL 32837

KZF DESIGN
700 BROADWAY STREET
CINCINNATI, OH 45202

FT BENNING, GEORGIA
IMMIGRATION & CUSTOMS ENFORCEMENT (ICE)

ISOMETRICS

SHEET ID
MCB
P-901

JAN 06, 2023 - FINAL SUBMITTAL (35%)

NOT FOR CONSTRUCTION

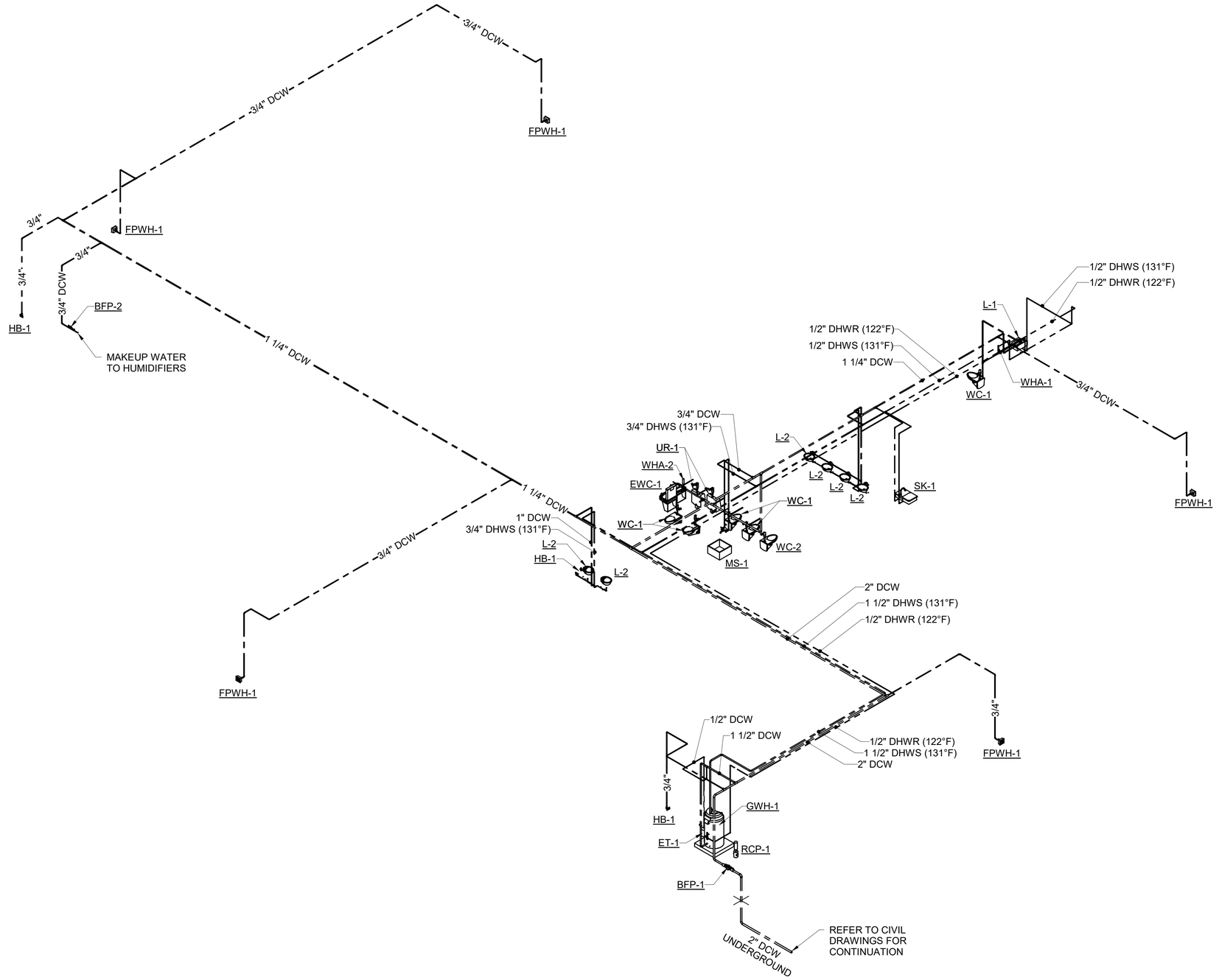

01 P-902 **DOMESTIC WATER ISOMETRIC**
NTS

MARK	DESCRIPTION	DATE

DESIGNED BY: FYE
DRAWN BY: FYE
CHECKED BY: TOSSEY
SUBMITTED BY: HUTZEL
SIZE: ANSI D
ISSUE DATE: MM-DD-YYYY
SOLICITATION NO.: 70CMSW22Q00000001
CONTRACT NO.: 70Z05018DKZFNPL08

US IMMIGRATION AND CUSTOMS ENFORCEMENT (ICE)
9495 DELEGATED DRIVE
ORLANDO, FL 32837

KZF DESIGN
700 BROADWAY STREET
CINCINNATI, OH 45202

FT BENNING, GEORGIA
IMMIGRATION & CUSTOMS ENFORCEMENT (ICE)

ISOMETRICS

SHEET ID
MCB
P-902

JAN 06, 2023 - FINAL SUBMITTAL (35%)

NOT FOR CONSTRUCTION

GAS SUPPLY LINE SIZING CALCULATION

MARK	DESCRIPTION	CFH INPUT	QTY	CFH SUBTOTAL
GWH-1	DOMESTIC WATER GAS WATER HEATER	120	1	120
AHU-1	AIR HANDLING UNIT	400	1	400
AHU-2	AIR HANDLING UNIT	400	1	400
H-1	HUMIDIFIER	61	1	61
H-2	HUMIDIFIER	61	1	61
		TOTAL LOAD:		**1042**

PIPE SIZE METHOD:	INTERNATIONAL FUEL GAS CODE - 2015 PARAGRAPH 402.3 #2
FUEL SOURCE:	NATURAL GAS
INLET PRESSURE:	LESS THAN 2 PSI
PRESSURE DROP:	0.5 IN. W.C.
SPECIFIC GRAVITY:	0.60
PIPE MATERIAL:	SCHEDULE 40 METALLIC PIPING

LONGEST EQUIVALENT LENGTH OF PIPE:	330 FT.
SAFETY FACTOR:	10%
TOTAL DEVELOPED LENGTH OF PIPE:	363 FT.
LENGTH OF PIPE ROW USED FROM IFGC TABLE:	**400 FT.**

02 P-903 **STORMWATER ISOMETRIC**
NTS

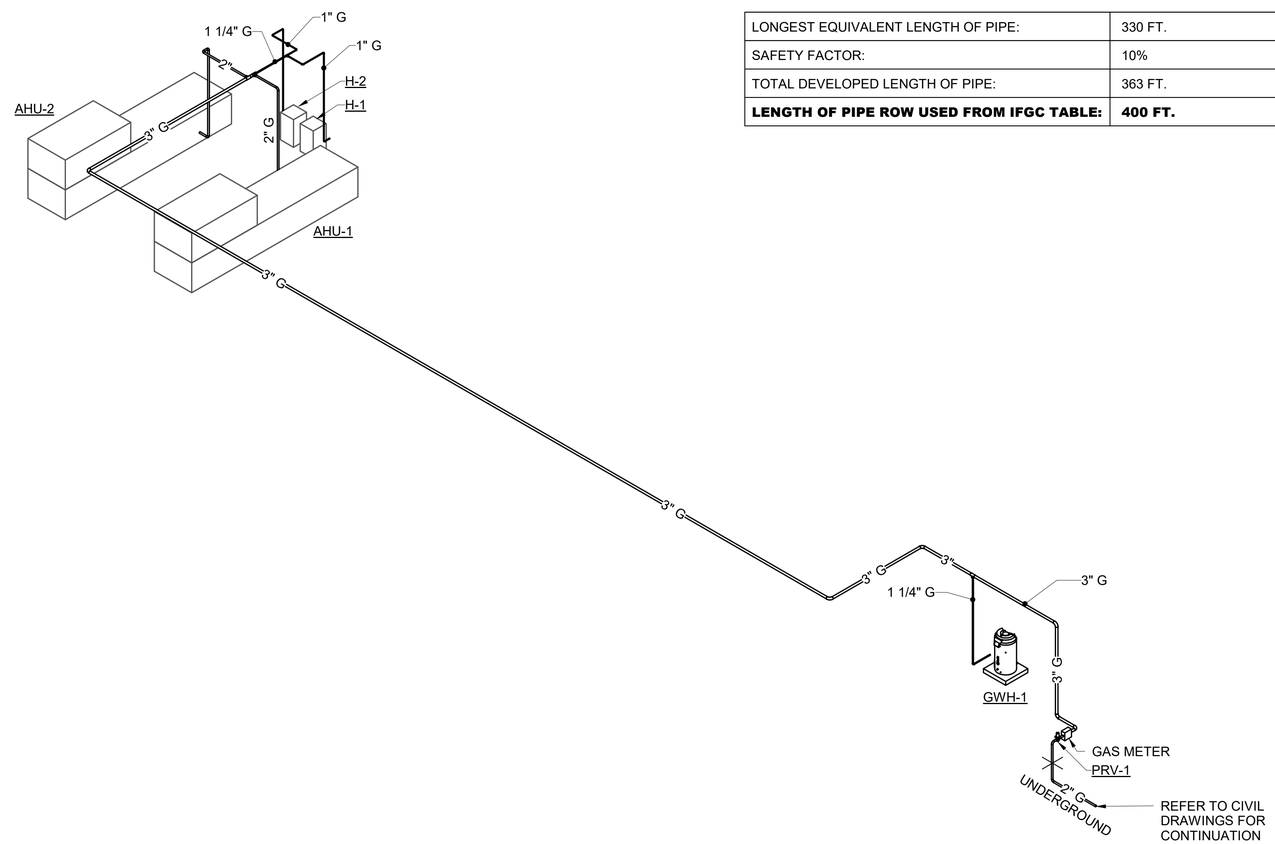

01 P-903 **NATURAL GAS ISOMETRIC**
NTS

MARK	DESCRIPTION	DATE

DESIGNED BY: FYE
DRAWN BY: FYE
CHECKED BY: TOSSEY
SUBMITTED BY: HUTZEL
SIZE: ANSI D
ISSUE DATE: MM-DD-YYYY
SOLICITATION NO.: 70CMSW22Q00000001
CONTRACT NO.: 70Z05018DKZFNPL08

US IMMIGRATION AND CUSTOMS ENFORCEMENT (ICE)
9495 DELEGATED DRIVE
ORLANDO, FL 32837

KZF DESIGN
700 BROADWAY STREET
CINCINNATI, OH 45202

FT BENNING, GEORGIA
IMMIGRATION & CUSTOMS ENFORCEMENT (ICE)

ISOMETRICS

SHEET ID
MCB
P-903

JAN 06, 2023 - FINAL SUBMITTAL (35%)

NOT FOR CONSTRUCTION

STANDARD MECHANICAL SYMBOLS

GENERAL SYMBOLS

- DRAWING NOTE HEX
- CONNECT TO EXISTING
- DETAIL OUTLINE
- DETAIL OR SECTION BUBBLE (A / M3) — USE "LETTERS" FOR SECTIONS; USE "NUMBERS" FOR DETAILS; SHEET NUMBER WHERE SECTION/DETAIL IS SHOWN
- AHU-1 — EQUIPMENT MARK NUMBER
- ABV. — ABBREVIATION OF ITEM

PLUMBING SYMBOLS

- PIPE UP TO FIXTURE OR EQUIPMENT INDICATED
- R2 — ROOF LEADER/DOWNSPOUT NUMBER
- S1 — SANITARY WASTE STACK AND VENT NUMBER
- 1 — WATER ISOMETRIC NUMBER
- KITCHEN EQUIPMENT/LABORATORY EQUIPMENT NUMBER
- G — INTERCEPTOR W/ TYPE (G=GREASE; O=OIL)
- FLOOR PENETRATION LINE (ISOMETRIC)
- VENT THRU ROOF (ISOMETRIC)
- BACKWATER VALVE
- BACKFLOW PREVENTER (RP=REDUCED PRESSURE; DC=DUAL CHECK)
- FLOOR DRAIN W/ TRAP
- HUB DRAIN OUTLET W/ TRAP
- RUNNING TRAP W/ CLEANOUT
- FLOOR OR GRADE CLEANOUT
- CB-1 — CATCH BASIN W/ DESIGNATION
- MH-1 — MANHOLE W/ DESIGNATION
- ROOF DRAIN
- ROOF DRAIN W/ SCUPPER DRAIN
- COLD WATER
- HOT WATER
- HOT WATER RETURN
- HOT WATER WITH HEAT TRACE
- VENT PIPING
- (ABV) — PIPING ABOVE FLOOR OR GRADE (ABV=TYPE; SEE ABBREVIATIONS)
- (ABV) — PIPING BELOW FLOOR OR GRADE (ABV=TYPE; SEE ABBREVIATIONS)

PIPING SYMBOLS

- BALL VALVE
- BUTTERFLY VALVE
- GATE VALVE
- GLOBE VALVE
- GLOBE ANGLE VALVE
- GATE ANGLE VALVE
- RELIEF VALVE
- BALANCING VALVE
- CALIBRATED BALANCING VALVE
- PRESSURE REDUCING VALVE
- CHECK VALVE
- CHECK VALVE W/BALL DRIP
- O.S. & Y VALVE
- QUICK OPENING VALVE
- AAV — AUTOMATIC AIR VENT
- MAV — MANUAL AIR VENT
- AUTOMATIC FLOW CONTROL VALVE (SELF CONTAINED)
- STRAINER
- BLOW-OFF STRAINER
- UNION
- PRESSURE GAGE & COCK
- TW — THERMOMETER WELL
- CONCENTRIC REDUCER
- ECCENTRIC REDUCER
- FLEXIBLE CONNECTION
- PLUG VALVE
- THERMOMETER
- PRESSURE/TEMPERATURE PORT
- PIPE CAP
- ABV. — ABBREVIATION OF ITEM
- PIPE ELBOW DOWN
- PIPE ELBOW UP
- PIPE TEE DOWN
- PIPE TEE UP
- 45 DEGREE DROP
- ABV — ABBREVIATION OF PIPE CONTENTS
- A — ALIGNMENT GUIDE (A = TYPE)
- A — ANCHOR (A =TYPE)
- A — EXPANSION JOINT (A = TYPE)
- EXPANSION LOOP
- FLEXIBLE CONNECTOR
- R — PITCH OF PIPE (R = RISE; D = DROP) IN DIRECTION OF FLOW
- F & T — TRAP, STEAM W/ TYPE (F & T = FLOAT & THERMOSTAT; BT = BUCKET, TT = THERMOSTATIC)
- PUMP
- PSD — PUMP SUCTION DIFFUSER

HVAC DUCTWORK SYMBOLS

- SG-1 / 200 — AIR SUPPLY OUTLET W/THROW DIRECTION (SG = GRILLE; CD = CEILING DIFFUSER; SR = REGISTER) (200 = CFM QUANTITY)
- RG-1 / 200 — AIR EXHAUST OR RETURN (RG OR EG = GRILLE; RR OR ER = REGISTER) (200 = CFM QUANTITY)
- LD-1 / 200 — LINEAR DIFFUSER (200 = CFM QUANTITY)
- AIR SUPPLY DUCT ELBOW UP
- AIR RETURN, OUTSIDE OR EXHAUST DUCT ELBOW UP
- AIR SUPPLY DUCT ELBOW DOWN
- AIR RETURN, OUTSIDE OR EXHAUST DUCT ELBOW DOWN
- FIRE DAMPER - VERTICAL POSITION (HORIZONTAL AIR FLOW; AD = ACCESS DOOR)
- FIRE DAMPER - HORIZONTAL POSITION (VERTICAL AIR FLOW; AD = ACCESS DOOR)
- SMOKE DAMPER - VERTICAL POSITION (HORIZONTAL AIR FLOW; AD = ACCESS DOOR)
- SMOKE DAMPER - HORIZONTAL POSITION (VERTICAL AIR FLOW; AD = ACCESS DOOR)
- OR — INTERNAL INSULATION
- AUTOMATIC AIR DAMPER
- VOLUME DAMPER
- BDD — BACKDRAFT DAMPER
- R — DUCT PITCH IN DIRECTION OF FLOW (R = RISE; D = DROP)
- 20X12 — DUCT SIZE; FIRST NUMBER SHOWN IS DIMENSION OF SIDE SHOWN (DIMENSIONS ARE CLEAR INTERNAL)
- AD — ACCESS DOOR (VERTICAL OF HORIZONTAL)
- CEILING DIFFUSER (CEILING OR BOTTOM OF DUCT)
- RETURN GRILLE (CEILING OR BOTTOM OF DUCT)
- SUPPLY GRILLE (WALL OR SIDE OF DUCT, SIMILAR FOR RETURN/EXHAUST GRILLES)
- OR — FLEXIBLE DUCT CONNECTION
- S R — RECTANGULAR BRANCH TAKE-OFF
- MANUAL SPLITTER DAMPER
- SUPPLY AIR
- RETURN OR EXHAUST AIR
- UC 1/2" / 100 — UNDER CUT DOOR,WITH SIZE & CFM
- 20X12 L / 200 — LOUVERED DOOR,WITH SIZE & CFM
- 12 — DUCT PRESSURE CLASS INDICATOR (INCHES W.G.)
- UNIT HEATER, HORIZONTAL THROW
- UNIT HEATER, VERTICAL THROW

HVAC DUCTWORK SYMBOLS (CONT.)

- DUCT CAP
- FAN
- STEAM HUMIDIFIER
- OPPOSED AIR DAMPER
- PARALLEL BLADE AIR DAMPER
- AFMS — AIR FLOW MEASURING STATION

HVAC CONTROL SYMBOLS

- T — ROOM THERMOSTAT
- H — HUMIDISTAT
- CO_2 — CARBON DIOXIDE SENSOR
- SELF OPERATED VALVE
- TWO-WAY CONTROL VALVE
- C / NC / NO — THREE-WAY CONTROL VALVE (C=COMMON; NC=NORMALLY CLOSED; NO=NORMALLY OPEN)
- MOTOR STARTER
- VFD — VARIABLE FREQUENCY DRIVE
- CO — CARBON MONOXIDE SENSOR
- NO_X — NITROUS OXIDE SENSOR
- SD — DUCT SMOKE DETECTOR

NOTES:

A. THIS LEGEND IS COMPOSED OF STANDARD SYMBOLS AND APPLIES TO THE SET OF DRAWINGS TO THE EXTENT APPLICABLE.

MARK	DESCRIPTION	DATE

DESIGNED BY: FYE
DRAWN BY: FYE
CHECKED BY: TOSSEY
SUBMITTED BY: HUTZEL
SIZE: ANSI D
ISSUE DATE: MM-DD-YYYY
SOLICITATION NO.: 70CMSW22Q00000001
CONTRACT NO.: 70Z05018DKZFNPL08

US IMMIGRATION AND CUSTOMS ENFORCEMENT (ICE)
9455 BEE RIDGE DRIVE
ORLANDO, FL 32827

KZF DESIGN
700 BROADWAY ST STREET
CINCINNATI, OH 45202

FT BENNING, GEORGIA
IMMIGRATION & CUSTOMS ENFORCEMENT (ICE)

SYMBOLS

SHEET ID
MCB
M-001

JAN 06, 2023 - FINAL SUBMITTAL (35%)

NOT FOR CONSTRUCTION

MECHANICAL ABBREVIATIONS

A	AMPERE
AAD	AUTOMATIC AIR DAMPER
AC	AIR CONDITIONING UNIT
ACCU	AIR COOLED CONDENSING UNIT
AFF	ABOVE FINISHED FLOOR
AHU	AIR HANDLING UNIT
AS	AIR SEPARATOR
ATFP	ANTI-TERRORISM FORCE PROTECTION
B	BOILER
BTU	BRITISH THERMAL UNIT
BTUH	BRITISH THERMAL UNIT PER HOUR
CD****	CEILING DIFFUSER
CD****	CONDENSATE DRAIN
CF	CHEMICAL SHOT FEEDER
CFM	CUBIC FEET PER MINUTE
CH	CHILLER
CHP	CHILLED WATER PUMP
CHWR	CHILLED WATER RETURN
CHWS	CHILLED WATER SUPPLY
COP	COEFFICIENT OF PERFORMANCE
DB****	DECIBEL
DB****	DRY-BULB TEMPERATURE
DDC	DIRECT DIGITAL CONTROL
DEG	DEGREE
DF	DRYER BOOSTER FAN
DIA	DIAMETER
DN	DOWN
DOAS	DEDICATED OUTSIDE AIR SYSTEM
DWG	DRAWING
EA	EXHAUST AIR
EAT	ENTERING AIR TEMPERATURE
EF	EXHAUST AIR FAN
EG	EXHAUST AIR GRILLE
ENT	ENTERING
EWT	ENTERING WATER TEMPERATURE
F	FAHRENHEIT TEMPERATURE
FLA	FULL LOAD AMPS
FPM	FEET PER MINUTE
FT	FEET
FT2	SQUARE FEET
GPM	GALLONS PER MINUTE
H****	HEIGHT
H****	HUMIDIFIER
HP****	HORSEPOWER
HR	HOUR
HVAC	HEATING, VENTILATION, AND AIR CONDITIONING
HWP	HEATING WATER PUMP
HWR	HEATING WATER RETURN
HWS	HEATING WATER SUPPLY
HZ	HERTZ
HP	HEAT PUMP
IN	INCHES
IN. WG.	INCHES OF WATER GAUGE
KW	KILOWATT
L	LOUVER
LAT	LEAVING AIR TEMPERATURE
LBS	POUNDS
LVG	LEAVING
LWT	LEAVING WATER TEMPERATURE
MAX	MAXIMUM
MBH	ONE THOUSAND BRITISH THERMAL UNITS PER HOUR
MCA	MINIMUM CIRCUIT AMPS
MERV	MINIMUM EFFICIENCY REPORTING VALUES
MIN	MINIMUM
MOCP	MINIMUM OVERCURRENT PROTECTION
NC****	NOISE CRITERIA
NC****	NORMALLY CLOSED
NO	NORMALLY OPEN
NTS	NOT TO SCALE
OA	OUTSIDE AIR
OCC	OCCUPANCY
PD	PRESSURE DROP OR DIFFERENTIAL
PH	PHASE
R	RELAY
RA	RETURN AIR
RG	RETURN AIR GRILLE
RH	RELATIVE HUMIDITY
RL	REFRIGERANT LIQUID
RM	ROOM
RS	REFRIGERANT SUCTION
RTU	ROOF TOP UNIT
SA	SUPPLY AIR
SEER	SEASONAL ENERGY EFFICIENCY RATIO
SG	SUPPLY AIR GRILLE
SP	STATIC PRESSURE
T	THERMOSTAT
TA	TRANSFER AIR
TYP	TYPICAL
UH	UNIT HEATER
V	VOLT
VAV	VARIABLE AIR VOLUME
VVB	VARIABLE VOLUME BOX
W****	WATTS
W****	WIDTH
W.C.	WATER COLUMN
WB	WET-BULB TEMPERATURE

NOTES:

A THIS LEGEND IS COMPOSED OF STANDARD ABBREVIATIONS AND APPLIES TO THE SET OF DRAWINGS TO THE EXTENT APPLICABLE.

B **** INDICATES MULTIPLE ABBREVIATIONS. REFER TO THE DRAWINGS FOR EXACT MEANING.

MARK	DESCRIPTION	DATE

DESIGNED BY: FYE
DRAWN BY: FYE
CHECKED BY: TOSSEY
SUBMITTED BY: HUTZEL
SIZE: ANSI D
ISSUE DATE: MM-DD-YYYY
SOLICITATION NO.: 70CMSW22Q00000001
CONTRACT NO.: 70Z05018DKZFNPL08

US IMMIGRATION AND CUSTOMS ENFORCEMENT (ICE)
9495 DELEGATED DRIVE
ORLANDO, FL 32837

KZF DESIGN
700 BROADWAY STREET
CINCINNATI, OH 45202

FT BENNING, GEORGIA
IMMIGRATION & CUSTOMS ENFORCEMENT (ICE)

ABBREVIATIONS

SHEET ID
MCB
M-002

JAN 06, 2023 - FINAL SUBMITTAL (35%)

NOT FOR CONSTRUCTION

GENERAL NOTES
(APPLIES TO ALL 'M' SERIES SHEETS)

A ALL WORK AND EQUIPMENT SHALL CONFORM WITH THE REQUIREMENTS OF THE INTERNATIONAL BUILDING CODE, INTERNATIONAL MECHANICAL CODE, FORT BENNING INSTALLATION FACILITY STANDARD, ALL APPLICABLE UFC'S, AND ALL LOCAL CODES.

B CONTRACTOR SHALL FIELD VERIFY EXISTING CONDITIONS AFFECTING THIS SCOPE OF WORK PRIOR TO PERFORMING WORK.

C ALL EXISTING PIPING, DUCTWORK, EQUIPMENT, ETC. IS TO REMAIN UNLESS NOTED OTHERWISE.

D CONTRACTOR SHALL BE RESPONSIBLE FOR ALL REQUIRED PERMITS AND INSPECTIONS.

E THE MECHANICAL CONTRACTORS AND EQUIPMENT SUPPLIERS SHALL COMPARE THE ELECTRICAL POWER REQUIREMENTS OF THE INTENDED EQUIPMENT AS SPECIFIED WITH THE POWER CHARACTERISTICS TO THE EQUIPMENT AS SHOWN ON THE ELECTRICAL DRAWINGS. SHOULD THE SELECTED EQUIPMENT AS FURNISHED BY THE CONTRACTOR REQUIRE A LARGER REVISION OF ITS BRANCH FEEDER, THE ADDED COSTS SHALL BE BORNE BY THE CONTRACTOR FURNISHING THE EQUIPMENT.

F TRANSFORMERS, CONTROLS, AND CONTROL WIRING REQUIRED FOR ALL MECHANICAL SYSTEMS SHALL BE FURNISHED AND INSTALLED BY THE MECHANICAL CONTRACTOR.

G ALL REQUIRED CONTROL WIRING NOT SHOWN ON THE ELECTRICAL DRAWINGS SHALL BE INCLUDED AS PART OF THE MECHANICAL WORK. WIRING IN HVAC PLENUM SPACES SHALL BE INSTALLED ACCORDING TO CODE REQUIREMENTS.

H ALL MECHANICAL EQUIPMENT SHALL BE INSTALLED ACCORDING TO MANUFACTURER'S RECOMMENDATIONS.

I ALL EQUIPMENT SHALL BE INSTALLED TO MAINTAIN ALL CODE, MANUFACTURER, AND MAINTENANCE CLEARANCES. VERIFY SPECIFIC LOCATION AND ORIENTATION OF EACH UNIT WITH THE CONTRACTING OFFICER PRIOR TO INSTALLATION.

J ANY CHANGES FROM THE BASIS OF DESIGN EQUIPMENT SELECTIONS WILL REQUIRE THE CONTRACTOR TO MAKE ALL ADJUSTMENTS NECESSARY FOR SELECTED EQUIPMENT.

K CONTRACTOR SHALL COORDINATE THE INSTALLATION OF ALL MECHANICAL EQUIPMENT, DUCTWORK, ETC. TO FIT WITHIN THE SPACE ALLOWED BY THE ARCHITECTURAL AND STRUCTURAL CONDITIONS. CUTTING OR OTHERWISE ALTERING ANY STRUCTURAL MEMBERS SHALL NOT BE PERMITTED WITHOUT WRITTEN PERMISSION FROM THE CONTRACTING OFFICE.

L REFER TO ARCHITECTURAL DRAWINGS GENERAL NOTES FOR PERTINENT INFORMATION.

M ALL DUCTWORK SHALL BE SUPPORTED FROM THE BUILDING STRUCTURE AND SHALL NOT REST ON THE CEILING TILES OR CEILING STRUCTURE.

N ALL PIPE TO BE SUPPORTED AS REQUIRED FOR SPANS. DO NOT USE ELECTRICAL TRAY AND TRAY SUPPORTS TO SUPPORT PIPING.

O PROVIDE FIRE DAMPERS PER LATEST NFPA REQUIREMENTS AND LOCAL CODES. PROVIDE ACCESS DOOR AT EACH FIRE DAMPER. REFER TO ARCHITECTURAL DRAWINGS FOR FIRE RATED WALL LOCATIONS.

P ALL DUCT SMOKE DETECTORS ARE PROVIDED UNDER ELECTRICAL OR FIRE ALARM WORK. HVAC CONTRACTOR TO WIRE CONTROL CIRCUIT THROUGH SMOKE DETECTOR FOR FAN SHUT-DOWN.

Q PACK SLEEVES FULL AROUND PIPES AND DUCTS PASSING THRU FLOORS AND FIRE-RATED WALLS AND PARTITIONS TO MAINTAIN THE FIRE OR SMOKE RATING OF THAT CONSTRUCTION. REFER TO SPECIFICATION SECTION 07 84 00 - FIRESTOPPING.

R FOR PURPOSES OF CLEARNESS AND LEGIBILITY, DRAWINGS ARE ESSENTIALLY DIAGRAMMATIC ALTHOUGH SIZE AND LOCATION OF EQUIPMENT ARE SHOWN TO SCALE WHEREVER POSSIBLE.

S DUCTWORK DIMENSIONS SHOWN ON THE DRAWINGS ARE INSIDE CLEAR DIMENSIONS. EQUIVALENT DUCT SIZES ARE ACCEPTABLE IN LIEU OF DUCT SIZES SHOWN.

T DUCTWORK SHALL BE AS SPECIFIED IN HVAC SPECIFICATIONS. CONSTRUCT AND INSTALL PER LATEST EDITION OF SMACNA DUCT CONSTRUCTION STANDARDS.

U PROVIDE FLEXIBLE CONNECTIONS IN ALL DUCTWORK SYSTEMS (SUPPLY, RETURN, AND EXHAUST) CONNECTED TO AIR HANDLING UNITS, FANS, AND OTHER EQUIPMENT THAT REQUIRES VIBRATION ISOLATION. FLEXIBLE CONNECTIONS SHALL BE PROVIDED AT THE POINT OF CONNECTION TO THE EQUIPMENT UNLESS OTHERWISE INDICATED.

V FLEXIBLE DUCTWORK SHALL BE SAME SIZE AS DIFFUSER NECKS. MAXIMUM 5'-0" LONG.

W DUCT RUNOUT SIZE TO DIFFUSERS AND TERMINAL UNITS SHALL BE THE SAME SIZE AS THE DIFFUSER NECK SIZE UNLESS OTHERWISE NOTED.

X LOW PRESSURE ROUND AND FLEXIBLE DUCTWORK SHALL BE CONNECTED TO MAIN LOW PRESSURE DUCTS WITH SPIN-IN FITTINGS AND BALANCE DAMPERS.

Y PROVIDE DUCT SEAM SEALING ON ALL DUCTWORK. REFER TO SPECIFICATIONS.

Z SEAL ALL DUCTWORK PENETRATIONS OF ACOUSTICALLY INSULATED WALLS WITH ACOUSTICAL SEALANT.

AA ALL RECTANGULAR DUCTWORK ELBOWS SHALL HAVE TURNING VANES.

BB ELBOWS IN DISHWASHER, KITCHEN, AND LAUNDRY EXHAUSTS SHALL BE OF UNVANED SMOOTH RADIUS CONSTRUCTION WITH A RADIUS EQUAL TO 1.5 TIMES WITH WIDTH OF THE DUCT.

CC ALL DUCTWORK SHALL BE INSULATED PER SPECIFICATIONS.

DD LOCATIONS OF GRILLES, REGISTERS, AND DIFFUSERS SHOWN ON THE DRAWINGS ARE APPROXIMATE. COORDINATE EXACT LOCATIONS WITH LIGHTS, CEILING GRID, ETC.

EE AN EFFORT HAS BEEN MADE TO SHOW ALL TRANSFER GRILLES AND TRANSFER DUCTS OR WALL OPENINGS IN FULL HEIGHT WALLS, ETC. HOWEVER IN THE ABSENCE OF SPECIFIC OR INCORRECT LOCATION, PROVIDE TRANSFER AS REQUIRED. REFER TO ARCHITECTURAL DRAWINGS FOR ALL LOCATIONS OF FULL HEIGHT WALLS.

FF PROVIDE BALANCING DAMPERS WHERE SHOWN AND AT ALL DUCTED ACCESSIBLE BRANCH TAKE-OFFS TO SUPPLY, RETURN, AND EXHAUST GRILLES, REGISTERS, AND DIFFUSERS. WHERE DAMPERS SERVING AIR DEVICES ARE LOCATED IN NON-ACCESSIBLE LOCATIONS, PROVIDE A DAMPER IN THE SUPPLY DUCT NECK AT THE DIFFUSER. (NON-ACCESSIBLE MEANS DRYWALL CEILINGS, ETC.)

GG NO PVC PIPING OR COMBUSTIBLE MATERIAL SHALL BE USED IN RETURN AIR PLENUMS. ANY EXISTING PVC PIPING LOCATED IN THE PLENUM IS REQUIRED TO BE INSULATED WITH MATERIALS THAT COMPLY WITH THE FLAME AND SMOKE SPREAD INDEX REQUIREMENTS STATED IN ASTM E84 AND AS STATED IN THE INTERNATIONAL MECHANICAL CODE.

HH CONTRACTOR SHALL PROVIDE MANUAL AIR VENTS AT ALL HIGH POINTS AND DRAINS AT ALL LOW POINTS IN HOT WATER SYSTEM. ALL AIR VENTS SHALL BE PIPED TO DRAINS.

II PROVIDE ACCESS PANELS FOR INSTALLATION IN WALLS AND CEILINGS, WHERE REQUIRED, TO SERVICE DAMPERS, VALVES, SMOKE DETECTORS, AND OTHER CONCEALED MECHANICAL EQUIPMENT. ACCESS PANELS SHALL BE TURNED OVER TO THE GENERAL CONTRACTOR FOR INSTALLATION.

JJ PROVIDE ACCESS DOORS IN DUCTWORK FOR THE OPERATION, ADJUSTMENT, INSPECTION AND MAINTENANCE OF ALL SMOKE DETECTORS, FIRE DAMPERS, SMOKE DAMPERS, HUMIDIFIERS, AND COILS.

KK LOCATE TEMPERATURE, PRESSURE, AND FLOW MEASURING DEVICES IN ACCESSIBLE LOCATIONS WITH THE STRAIGHT SECTION OF PIPE OR DUCT UP AND DOWNSTREAM AS RECOMMENDED BY THE MANUFACTURER FOR ACCURACY.

LL THERMOSTATS AND SENSORS TO BE LOCATED AT 48" AFF. COORDINATE FINAL THERMOSTAT LOCATION WITH OTHER DISCIPLINES AND CONTRACTING OFFICER. REFER TO ARCHITECTURAL PLANS AND ELEVATIONS. VERIFY THE PERIMETER WALLS OR COLUMN ENCLOSURE ARE INSULATED. PROVIDE INSULATED PAD BEHIND THERMOSTAT/SENSOR MOUNTING BRACKET IF MOUNTING LOCATION IS NOT INSULATED. PROVIDE AN EXTRA 10 FT. OF THERMOSTAT/SENSOR WIRE COILED ABOVE CEILING TO ALLOW FOR FUTURE RELOCATION OF THERMOSTAT.

MM ALL ROOF MOUNTED EQUIPMENT CURBS FOR EQUIPMENT PROVIDED BY THE MECHANICAL CONTRACTOR SHALL BE FURNISHED BY THE MECHANICAL CONTRACTOR AND INSTALLED BY THE GENERAL CONTRACTOR.

NN TERMINATE FLUES FOR GAS BURNING APPLIANCES SUCH AS UNIT HEATERS, WATER HEATERS, ETC. A MINIMUM OF 30" ABOVE THE ROOF WITH RAIN CAP.

OO OPEN ENDS OF ALL DUCTWORK DELIVERED TO SITE SHALL BE COVERED BEFORE DELIVERY TO AVOID CONTAMINATION FIELD.

PP OPEN ENDS OF NEW PIPE LINES SHALL BE TEMPORARILY CAPPED OR PLUGGED DURING CONSTRUCTION TO PREVENT ENTRY OF DIRT OR FOREIGN MATERIALS.

QQ SOME OF THE AREAS SURROUNDING THE WORK AREAS ARE OCCUPIED AND WILL REMAIN OCCUPIED DURING THE CONSTRUCTION PERIOD. COORDINATE WORK SCHEDULE WITH BUILDING MANAGEMENT.

RR WHERE SHUTDOWN OF EXISTING SYSTEMS IS REQUIRED DURING NEW WORK, COORDINATE SHUTDOWN TIME AND DURATION WITH THE CONTRACTING OFFICER TO MINIMIZE DOWNTIME. NOTIFY CONTRACTING OFFICER SEVEN (7) DAYS PRIOR TO INTERRUPTION OF SERVICE.

SS AFTER CONSTRUCTION, THE HVAC SYSTEM SHALL BE TESTED, ADJUSTED, AND BALANCED TO DELIVER THE QUANTITIES SHOWN ON THE DRAWINGS AND A REPORT SUBMITTED TO CONTRACTING OFFICER FOR APPROVAL.

TT RETURN AIRFLOW SHOWN AT RETURN AIR GRILLES IS FOR DUCT SIZING PURPOSES ONLY. ACTUAL RETURN AIRFLOW MAY VARY.

UU PAINT EXTERIOR PLASTIC PIPING WITH UV RESISTANT PAINT.

MARK	DESCRIPTION	DATE

DESIGNED BY: FYE
DRAWN BY: FYE
CHECKED BY: TOSSEY
SUBMITTED BY: HUTZEL
SIZE: ANSI D
ISSUE DATE: MM-DD-YYYY
SOLICITATION NO.: 70CMSW22Q00000001
CONTRACT NO.: 70Z05018KZFNPL08

US IMMIGRATION AND CUSTOMS ENFORCEMENT (ICE)
9454 ESTES CREST DRIVE
ORLANDO, FL 32837

KZF DESIGN
700 BROADWAY STREET
CINCINNATI, OH 45202

FT BENNING, GEORGIA
IMMIGRATION & CUSTOMS ENFORCEMENT (ICE)

GENERAL NOTES

SHEET ID
MCB
M-003

JAN 06, 2023 - FINAL SUBMITTAL (35%)

NOT FOR CONSTRUCTION

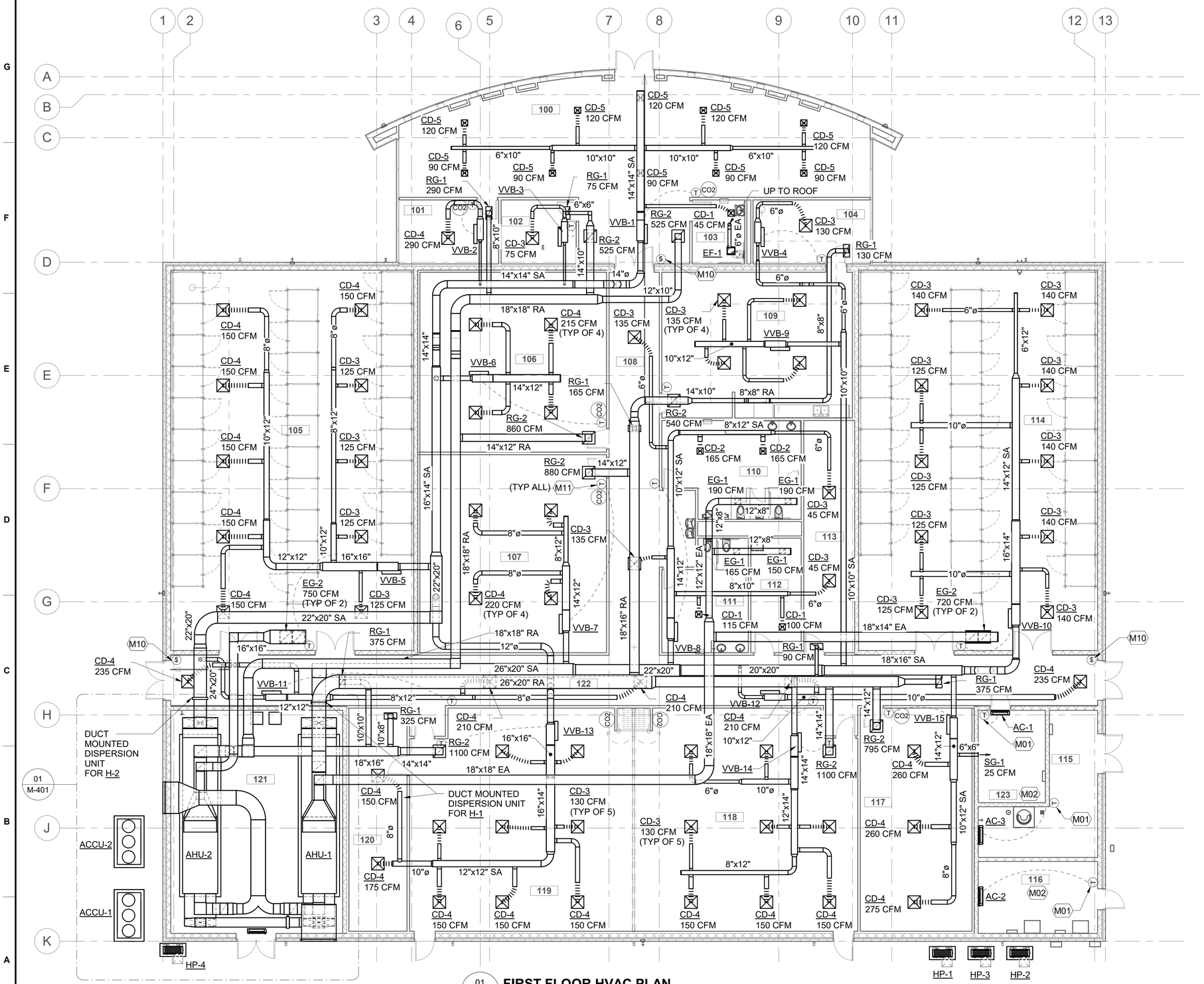

01 M-101 **FIRST FLOOR HVAC PLAN**
1/8" = 1'-0"

ROOM SCHEDULE	
NUMBER	NAME
100	LOBBY
101	COUSELING
102	OFFICE
103	UNISEX RESTROOM
104	WORK ROOM / ADMIN STOR
105	GEAR LOCKER ROOM
106	TEAM ROOM
107	TEAM ROOM
108	CORRIDOR
109	BREAKROOM
110	MEN
111	WOMEN
112	JANITOR
113	STORAGE
114	GEAR LOCKER ROOM
115	MECHANICAL
116	MECH / ELECT
117	CONFERENCE
118	CLASSROOM
119	CLASSROOM
120	CONTROL/ STORAGE
121	MECHANICAL
122	CORRIDOR
123	TEL/COM

DRAWING NOTES

M01 MOUNT SPLIT SYSTEM UNIT REMOTE CONTROL ON WALL.

M02 DO NOT RUN PIPING OR DUCTWORK THROUGH OR ABOVE ELECTRICAL OR TELECOMMUNICATIONS ROOMS UNLESS SERVING THOSE ROOMS.

M10 ANTI-TERRORISM SHUT-DOWN BUTTON.

M11 COORDINATE THERMOSTAT LOCATION WITH FURNITURE AND WALL ELEVATION.

N

0 4' 8' 16'
SCALE: 1/8"=1'-0"

MARK	DESCRIPTION	DATE

DESIGNED BY: FYE
DRAWN BY: FYE
CHECKED BY: TOSSEY
SUBMITTED BY: HUTZEL
SIZE: ANSI D
ISSUE DATE: MM-DD-YYYY
SOLICITATION NO.: 70CMSW22Q00000001
CONTRACT NO.: 70Z05018DKZFNPL08

US IMMIGRATION AND CUSTOMS ENFORCEMENT (ICE)
9495 DELEGATED DRIVE
ORLANDO, FL 32837

KZF DESIGN
700 BROADWAY STREET
CINCINNATI, OH 45202

FT BENNING, GEORGIA
IMMIGRATION & CUSTOMS ENFORCEMENT (ICE)

FLOOR PLANS

SHEET ID
MCB
M-101

JAN 06, 2023 - FINAL SUBMITTAL (35%)

NOT FOR CONSTRUCTION

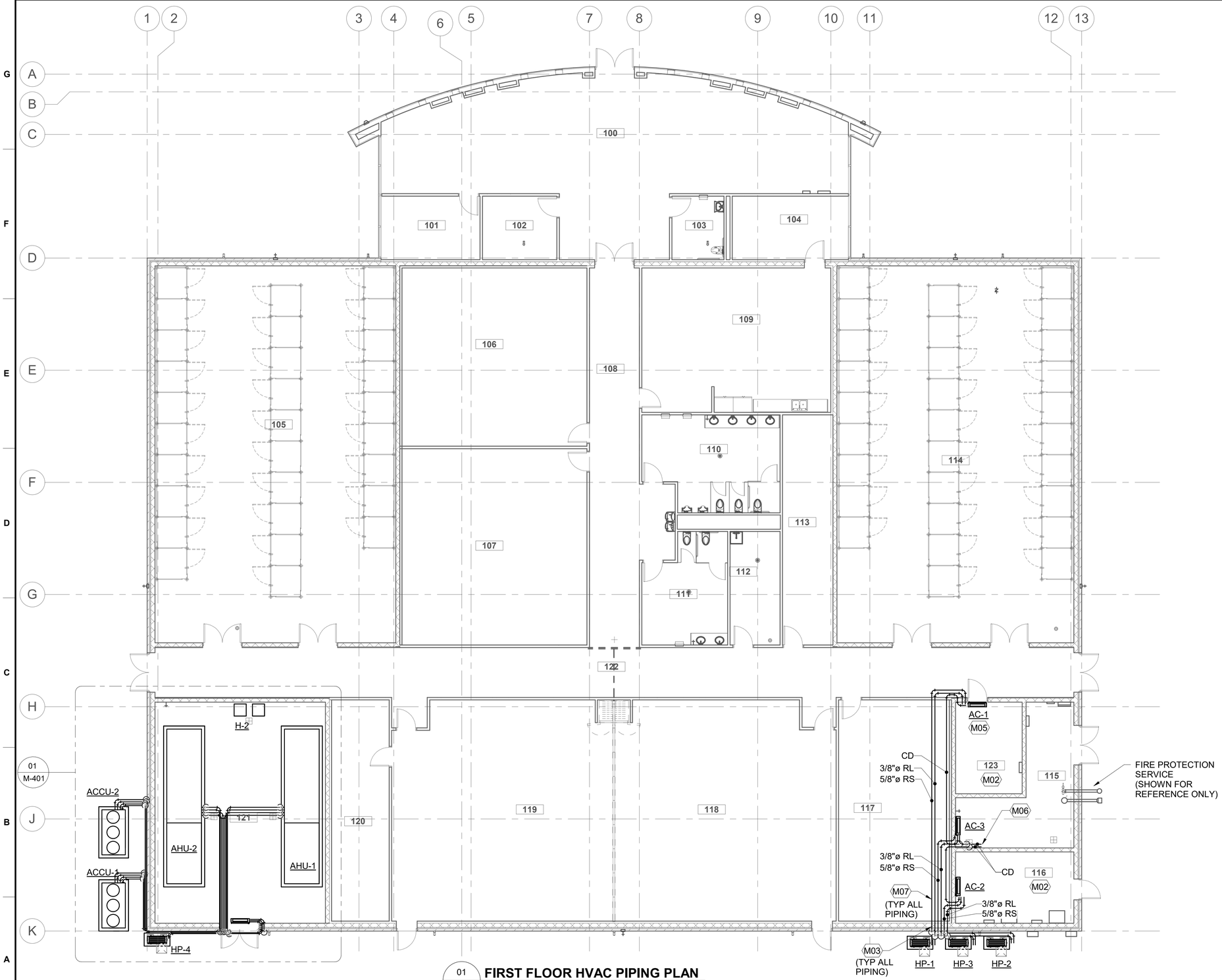

01 M-102 **FIRST FLOOR HVAC PIPING PLAN**
1/8" = 1'-0"

ROOM SCHEDULE	
NUMBER	NAME
100	LOBBY
101	COUSELING
102	OFFICE
103	UNISEX RESTROOM
104	WORK ROOM / ADMIN STOR
105	GEAR LOCKER ROOM
106	TEAM ROOM
107	TEAM ROOM
108	CORRIDOR
109	BREAKROOM
110	MEN
111	WOMEN
112	JANITOR
113	STORAGE
114	GEAR LOCKER ROOM
115	MECHANICAL
116	MECH / ELECT
117	CONFERENCE
118	CLASSROOM
119	CLASSROOM
120	CONTROL/ STORAGE
121	MECHANICAL
122	CORRIDOR
123	TEL/COM

DRAWING NOTES

M02 DO NOT RUN PIPING OR DUCTWORK THROUGH OR ABOVE ELECTRICAL OR TELECOMMUNICATIONS ROOMS UNLESS SERVING THOSE ROOMS.

M03 ALL PENETRATIONS THRU EXTERIOR WALL TO BE WATER TIGHT.

M05 DUCTLESS WALL MOUNTED UNIT, MOUNT ABOVE DOOR. REFRIGERANT PIPING OR CONDENSATE DRAIN SHALL NOT BE RUN INSIDE TELECOMMUNICATION ROOMS. SLOPE CONDENSATE DRAIN A MINIMUM OF 1%. DRAIN LINE TO BE CONTINUOUS WITHOUT BREAK UNTIL OUTSIDE ROOM.

M06 CONDENSATE DRAIN PIPE TO INDIRECT DRAIN TO FLOOR SINK OR SPLASH BLOCK WITH 1 INCH AIR GAP. CD PIPING TO BE SLOPED TO FLOOR SINK OR SPLASH BLOCK.

M07 DO NOT RUN PIPING OVER ELECTRICAL EQUIPMENT. MAINTAIN CODE REQUIRED ELECTRICAL CLEARANCE IN FRONT OF ELECTRICAL EQUIPMENT.

N

0 4' 8' 16'
SCALE: 1/8"=1'-0"

MARK	DESCRIPTION	DATE

ISSUE DATE: MM-DD-YYYY
SOLICITATION NO.: 70CMSW22Q00000001
CONTRACT NO.: 70Z05018DKZFNPL08
DESIGNED BY: FYE
DRAWN BY: FYE
CHECKED BY: TOSSEY
SUBMITTED BY: HUTZEL
SIZE: ANSI D

US IMMIGRATION AND CUSTOMS ENFORCEMENT (ICE)
9495 DELEGATED DRIVE
ORLANDO, FL 32837

KZF DESIGN
700 BROADWAY STREET
CINCINNATI, OH 45202

FT BENNING, GEORGIA
IMMIGRATION & CUSTOMS ENFORCEMENT (ICE)

FLOOR PLANS

SHEET ID
MCB
M-102

JAN 06, 2023 - FINAL SUBMITTAL (35%)

NOT FOR CONSTRUCTION

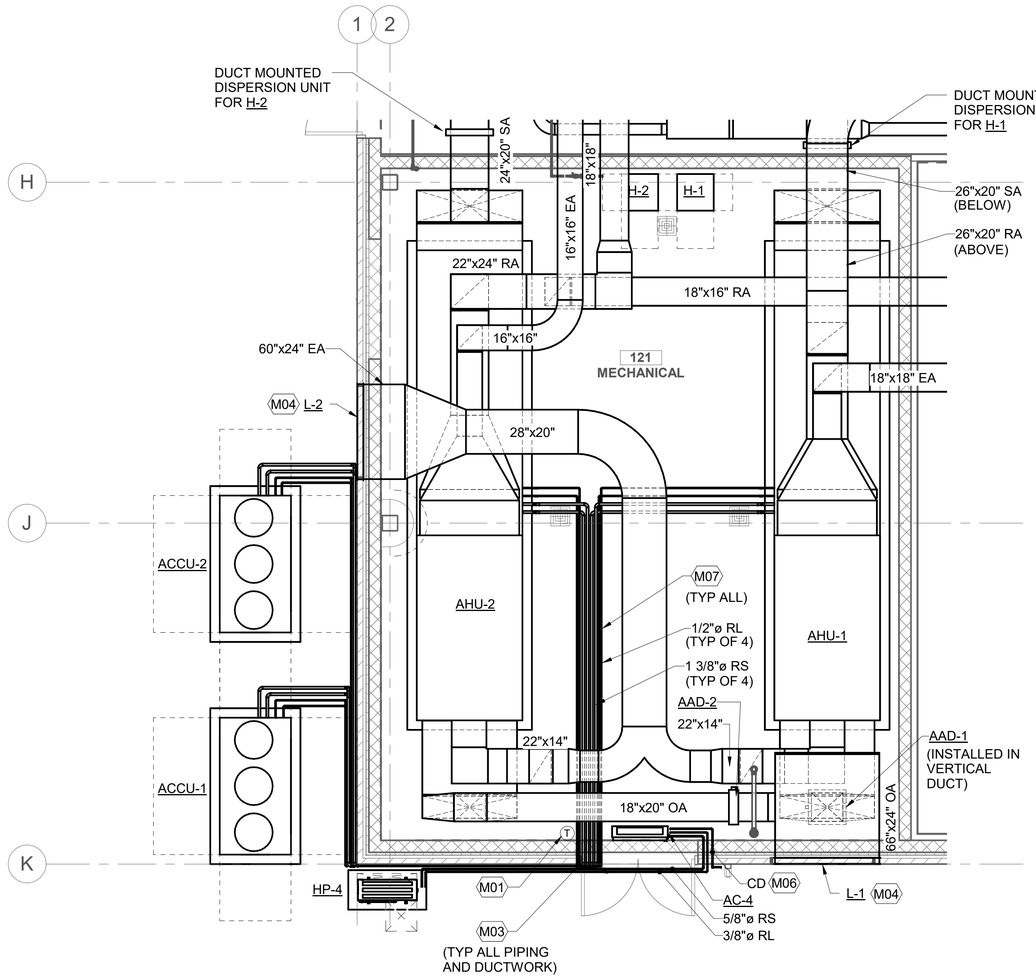

01 M-401 **ENLARGED MECHANICAL ROOM 121 PLAN ROOM**
1/4" = 1'-0"

DRAWING NOTES

M01 MOUNT SPLIT SYSTEM UNIT REMOTE CONTROL ON WALL.

M03 ALL PENETRATIONS THRU EXTERIOR WALL TO BE WATER TIGHT.

M04 MOUNT BOTTOM OF LOUVER AT 10'-0" AFF MINIMUM.

M06 CONDENSATE DRAIN PIPE TO INDIRECT DRAIN TO FLOOR SINK OR SPLASH BLOCK WITH 1 INCH AIR GAP. CD PIPING TO BE SLOPED TO FLOOR SINK OR SPLASH BLOCK.

M07 DO NOT RUN PIPING OVER ELECTRICAL EQUIPMENT. MAINTAIN CODE REQUIRED ELECTRICAL CLEARANCE IN FRONT OF ELECTRICAL EQUIPMENT.

N

0 2' 4' 8'
SCALE: 1/4"=1'-0"

MARK	DESCRIPTION	DATE

ISSUE DATE: MM-DD-YYYY
SOLICITATION NO.: 70CMSW22Q00000001
CONTRACT NO.: 70Z05018DKZFNPL08

DESIGNED BY: FYE
DRAWN BY: FYE
CHECKED BY: TOSSEY
SUBMITTED BY: HUTZEL
SIZE: ANSI D

US IMMIGRATION AND CUSTOMS ENFORCEMENT (ICE)
9495 DELEGATED DRIVE
ORLANDO, FL 32837

KZF DESIGN
700 BROADWAY STREET
CINCINNATI, OH 45202

FT BENNING, GEORGIA
IMMIGRATION & CUSTOMS ENFORCEMENT (ICE)

ENLARGED PLANS

SHEET ID
MCB
M-401

JAN 06, 2023 - FINAL SUBMITTAL (35%)

NOT FOR CONSTRUCTION

06 M-501 **PENETRATION THRU WALL**
NOT TO SCALE

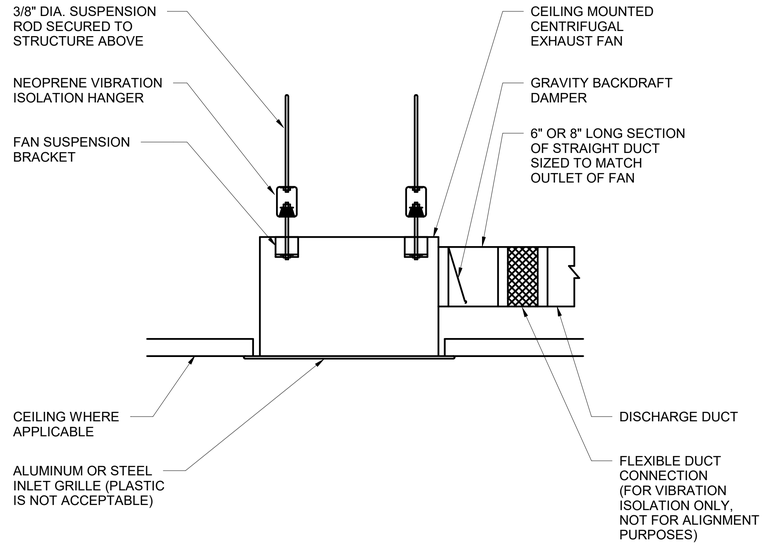

04 M-501 **CEILING MOUNTED EXHAUST FAN**
NOT TO SCALE

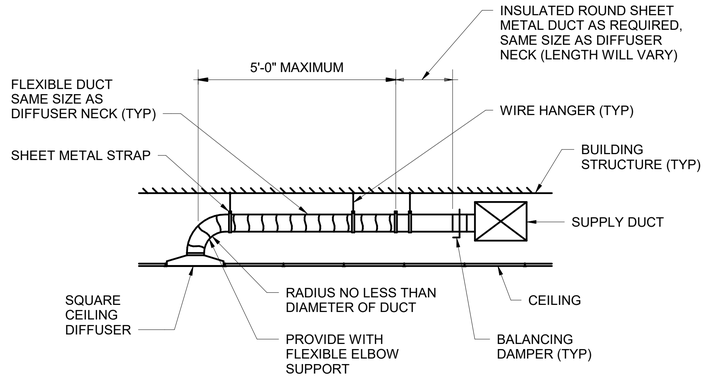

NOTE:
INSTALL AND SUPPORT DIFFUSERS PER MANUFACTURER'S INSTRUCTIONS.

02 M-501 **TYPICAL DUCT BRANCH AT LOW PRESSURE DUCT**
NOT TO SCALE

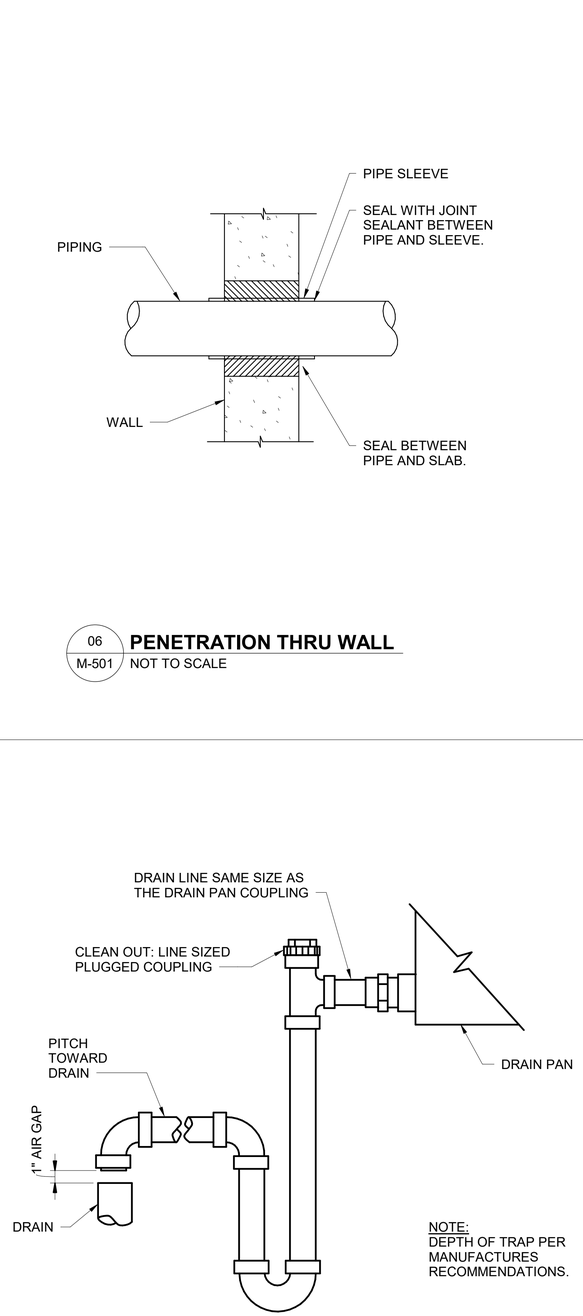

NOTE:
DEPTH OF TRAP PER MANUFACTURES RECOMMENDATIONS.

05 M-501 **CONDENSATE DRAIN TRAP**
NOT TO SCALE

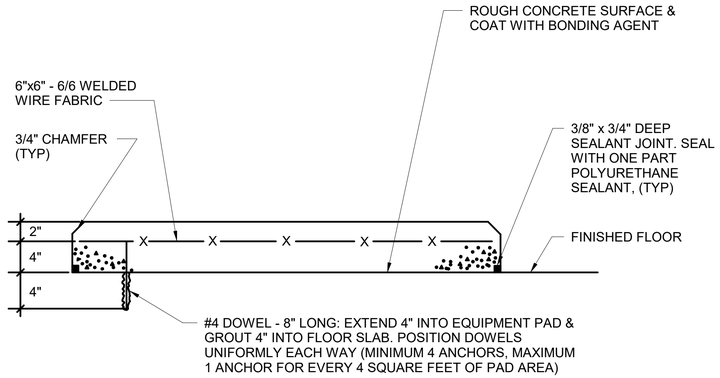

NOTE:
EQUIPMENT PAD SHALL BE 6" LARGER THAN SUPPORTED EQUIPMENT ON EACH SIDE.

03 M-501 **6 INCH EQUIPMENT PAD W/SEALANT**
NTS

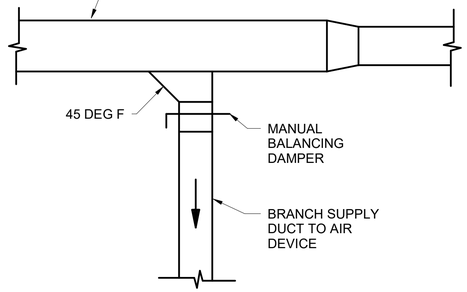

NOTE:
PROVIDE BALANCING DAMPER AT ALL BRANCH DUCTWORK. ASSURE THAT THE QUADRANT IS MOUNTED ON A STAND OFF BRACKET.

01 M-501 **RECTANGULAR BRANCH TAKEOFF AT LOW PRESSURE DUCT**
NTS

MARK	DESCRIPTION	DATE

DESIGNED BY: FYE
DRAWN BY: FYE
CHECKED BY: TOSSEY
SUBMITTED BY: HUTZEL
SIZE: ANSI D
ISSUE DATE: MM-DD-YYYY
SOLICITATION NO.: 70CMSW22Q00000001
CONTRACT NO.: 70Z05018DKZFNPL08

US IMMIGRATION AND CUSTOMS ENFORCEMENT (ICE)
9455 EXCHANGE DRIVE
ORLANDO, FL 32837

KZF DESIGN
700 BROADWAY STREET
CINCINNATI, OH 45202

FT BENNING, GEORGIA
IMMIGRATION & CUSTOMS ENFORCEMENT (ICE)

DETAILS

SHEET ID
MCB
M-501

JAN 06, 2023 - FINAL SUBMITTAL (35%)

NOT FOR CONSTRUCTION

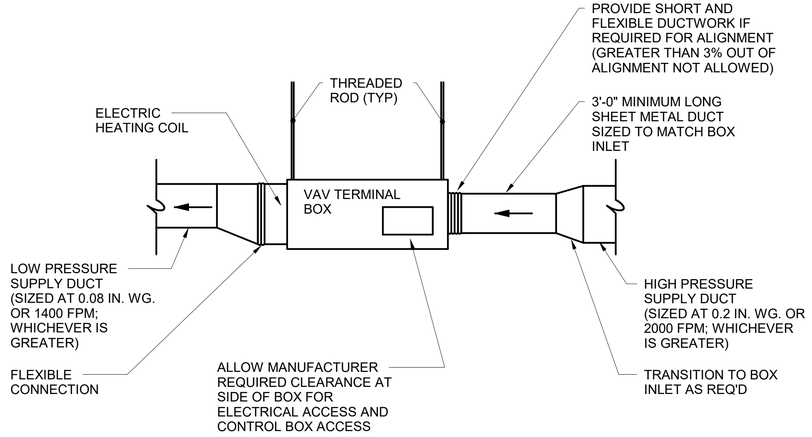

02 / M-502 **TYPICAL VAV TERMINAL BOX**
NOT TO SCALE

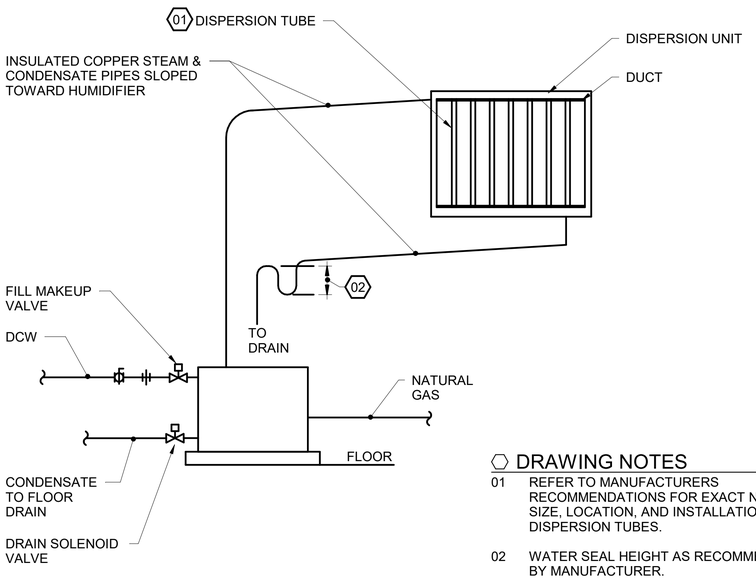

DRAWING NOTES

01 REFER TO MANUFACTURERS RECOMMENDATIONS FOR EXACT NUMBER, SIZE, LOCATION, AND INSTALLATION OF DISPERSION TUBES.

02 WATER SEAL HEIGHT AS RECOMMENDED BY MANUFACTURER.

01 / M-502 **IN DUCT HUMIDIFIER**
NOT TO SCALE

MARK	DESCRIPTION	DATE

ISSUE DATE: MM-DD-YYYY
SOLICITATION NO.: 70CMSW22Q00000001
CONTRACT NO.: 70Z05018DKZFNPL08
DESIGNED BY: FYE
DRAWN BY: FYE
CHECKED BY: TOSSEY
SUBMITTED BY: HUTZEL
SIZE: ANSI D

US IMMIGRATION AND CUSTOMS ENFORCEMENT (ICE)
9495 DELEGATED DRIVE
ORLANDO, FL 32837

KZF DESIGN
700 BROADWAY STREET
CINCINNATI, OH 45202

FT BENNING, GEORGIA
IMMIGRATION & CUSTOMS ENFORCEMENT (ICE)

DETAILS

SHEET ID
MCB
M-502

JAN 06, 2023 - FINAL SUBMITTAL (35%)

NOT FOR CONSTRUCTION

FAN SCHEDULE

MARK	MANUFACTURER	MODEL NUMBER	TYPE	AIRFLOW (CFM)	EXTERNAL STATIC PRESSURE DROP (IN WG)	ELECTRICAL DATA				NOTES
						W	VOLTAGE	PHASE	HZ	
EF-1	GREENHECK	SP-B110	CEILING EXHAUST FAN	75 CFM	0.50 in-wg	80.2	120 V	1	60 Hz	

01 PROVIDE BASIS OF DESIGN OR EQUAL.

02 PROVIDE WITH WEATHER TIGHT ROOF CURB CAP WITH INTEGRAL BIRDSCREEN.

LOUVER SCHEDULE

MARK	MANUFACTURER	MODEL NUMBER	SERVES	SYSTEM TYPE	SIZE (W x H)	AIRFLOW (CFM)	MAX. SP. (IN. WG.)	MIN. FREE AREA (FT2)	COMMENTS
L-1	GREENHECK	ESD-435	AHU-1 & AHU-2	OUTSIDE AIR	66" x 24"	4475	0.13	5.25	01 02 03
L-2	GREENHECK	ESD-435	AHU-1 & AHU-2	EXHAUST AIR	60" x 24"	4150	0.11	4.74	01 02 03

01 PROVIDE BASIS OF DESIGN OR EQUAL.

02 WEATHER BLADE TYPE.

03 PROVIDE WITH BIRDSCREEN.

DUCT CONSTRUCTION, PRESSURE CLASS, AND SEALING

GENERAL NOTES:
REFER TO SPECIFICATIONS FOR DUCT CONSTRUCTION OPTIONS,
SHEET METAL DUCT, EXTERIOR INSULATION, ETC.

DUCT SYSTEM	SMACNA CLASS		REFER TO NOTE
	CONSTRUCTION	SEAL CLASS	
ALL DUCTWORK EXCEPT AS LISTED BELOW	+/- 1" W.C.	A	
FRESH AIR DUCTS	- 2" W.C.	A	
RETURN AIR DUCTS	- 1" W.C.	A	
GENERAL AND TOILET EXHAUST DUCTS	- 2" W.C.	A	
TRANSFER AIR DUCTS	- 1" W.C.	A	
VAV SUPPLY DUCTWORK TO TERMINAL UNITS	4" W.C.	A	
SUPPLY DUCTS ON LEAVING SIDE OF TERMINAL UNITS	1" W.C.	A	

VARIABLE AIR VOLUME BOX

MARK	MANUFACTURER	MODEL NUMBER	INLET SIZE (IN)	MAX. UNIT SP DROP (IN WG)	MIN. AIRFLOW (CFM)	MAX. AIRFLOW (CFM)	ELECTRIC REHEAT COIL									NOTES
							EAT (°F)	LAT (°F)	AIRFLOW (CFM)	CAPACITY (KW)	STEPS	VOLTAGE	PHASE	HZ	MCA	MOCP	
VVB-1	CARRIER	35E	10	1.00	440 CFM	1095 CFM	55 °F	90 °F	440 CFM	5.0	3	460 V	3	60	7.52	15	01 02
VVB-2	CARRIER	35E	6	1.00	120 CFM	290 CFM	55 °F	90 °F	120 CFM	1.5	1	208 V	1	60	9.01	15	01 02
VVB-3	CARRIER	35E	4	1.00	55 CFM	75 CFM	55 °F	90 °F	55 CFM	1.0	1	208 V	1	60	6.01	15	01 02
VVB-4	CARRIER	35E	4	1.00	55 CFM	130 CFM	55 °F	90 °F	55 CFM	1.0	1	208 V	1	60	6.01	15	01 02
VVB-5	CARRIER	35E	12	1.00	560 CFM	1400 CFM	55 °F	90 °F	560 CFM	6.5	3	460 V	3	60	9.77	15	01 02
VVB-6	CARRIER	35E	8	1.00	380 CFM	860 CFM	55 °F	90 °F	380 CFM	4.5	3	460 V	3	60	6.77	15	01 02
VVB-7	CARRIER	35E	8	1.00	385 CFM	880 CFM	55 °F	90 °F	385 CFM	4.5	3	460 V	3	60	6.77	15	01 02
VVB-8	CARRIER	35E	8	1.00	365 CFM	905 CFM	55 °F	90 °F	365 CFM	4.5	3	460 V	3	60	6.77	15	01 02
VVB-9	CARRIER	35E	8	1.00	220 CFM	540 CFM	55 °F	90 °F	220 CFM	2.5	3	460 V	3	60	3.76	15	01 02
VVB-10	CARRIER	35E	12	1.00	540 CFM	1340 CFM	55 °F	90 °F	540 CFM	6.0	3	460 V	3	60	9.02	15	01 02
VVB-11	CARRIER	35E	8	1.00	285 CFM	655 CFM	55 °F	90 °F	285 CFM	3.5	3	460 V	3	60	5.26	15	01 02
VVB-12	CARRIER	35E	6	1.00	295 CFM	445 CFM	55 °F	90 °F	295 CFM	3.5	3	460 V	3	60	5.26	15	01 02
VVB-13	CARRIER	35E	12	1.00	890 CFM	1425 CFM	55 °F	90 °F	890 CFM	10.0	3	460 V	3	60	15.04	15	01 02
VVB-14	CARRIER	35E	10	1.00	835 CFM	1100 CFM	55 °F	90 °F	835 CFM	9.5	3	460 V	3	60	14.28	15	01 02
VVB-15	CARRIER	35E	8	1.00	330 CFM	820 CFM	55 °F	90 °F	330 CFM	4.0	3	460 V	3	60	6.01	15	01 02

01 PROVIDE BASIS OF DESIGN OR EQUAL.

02 CONTRACTOR TO VERIFY COIL AND CONTROL ORIENTATION BEFORE INSTALLATION.

SPLIT SYSTEM DX UNIT SCHEDULE

MARK	MANUFACTURER	MODEL NUMBER	DESCRIPTION	MAXIMUM COOLING CAPACITY (BTUH)	MINIMUM COOLING CAPACITY (BTUH)	RATED HEATING CAPACITY @ 47°F (BTUH)	INDOOR UNIT ELECTRICAL DATA				OUTDOOR UNIT ELECTRICAL DATA					COP @ 47°F	SEER	COMMENTS
							MCA	VOLTAGE	PHASE	HZ	MCA	MOCP	VOLTAGE	PHASE	HZ			
AC-1	MITSUBISHI ELECTRIC	PKA-A24KA7	WALL MOUNTED INDOOR UNIT	24000	10000	28000	1 A	208 V	1	60 Hz								01 02 03 04 05 SERVED BY HP-1
AC-2	MITSUBISHI ELECTRIC	PKA-A24KA7	WALL MOUNTED INDOOR UNIT	24000	10000	28000	1 A	208 V	1	60 Hz								01 02 03 04 05 SERVED BY HP-2
AC-3	MITSUBISHI ELECTRIC	PKA-A24KA7	WALL MOUNTED INDOOR UNIT	24000	10000	28000	1 A	208 V	1	60 Hz								01 02 03 04 05 SERVED BY HP-3
AC-4	MITSUBISHI ELECTRIC	PKA-A24KA7	WALL MOUNTED INDOOR UNIT	24000	10000	28000	1 A	208 V	1	60 Hz								01 02 03 04 05 SERVED BY HP-4
HP-1	MITSUBISHI ELECTRIC	PUZ-HA24NHA1	OUTDOOR HEAT PUMP UNIT								17 A	27 A	208 V	1	60 Hz	3.96	19.5	
HP-2	MITSUBISHI ELECTRIC	PUZ-HA24NHA1	OUTDOOR HEAT PUMP UNIT								17 A	27 A	208 V	1	60 Hz	3.96	19.5	
HP-3	MITSUBISHI ELECTRIC	PUZ-HA24NHA1	OUTDOOR HEAT PUMP UNIT								17 A	27 A	208 V	1	60 Hz	3.96	19.5	
HP-4	MITSUBISHI ELECTRIC	PUZ-HA24NHA1	OUTDOOR HEAT PUMP UNIT								17 A	27 A	208 V	1	60 Hz	3.96	19.5	

01 PROVIDE BASIS OF DESIGN OR EQUAL.

02 INDOOR UNIT POWERED FROM OUTDOOR UNIT.

03 PROVIDE LOW AMBIENT PACKAGE.

04 MOUNT UNIT REMOTE CONTROL TO WALL.

05 R-410A REFRIGERANT.

DATE | DESCRIPTION | MARK

DESIGNED BY: FYE
DRAWN BY: FYE
CHECKED BY: TOSSEY
SUBMITTED BY:
SIZE: ANSI D
ISSUE DATE: MM-DD-YYYY
SOLICITATION NO.: 70CMSW22Q00000001
CONTRACT NO.: 70Z05018KZFNPL08

US IMMIGRATION AND CUSTOMS ENFORCEMENT (ICE)
9400 DELEGATE DRIVE
ORLANDO, FL 32837

KZF DESIGN
700 BROADWAY STREET
CINCINNATI, OH 45202

FT BENNING, GEORGIA
IMMIGRATION & CUSTOMS ENFORCEMENT (ICE)

SCHEDULES

SHEET ID
MCB
M-601

JAN 06, 2023 - FINAL SUBMITTAL (35%)

NOT FOR CONSTRUCTION

AIR HANDLING UNIT SCHEDULE

MARK	MANUFACTURER	MODEL NO.	LOCATION	SUPPLY AIRFLOW (CFM)	SUPPLY FAN MOTOR DATA					ENERGY RECOVERY PERFORMANCE										EXHAUST FAN MOTOR DATA				
										OUTSIDE AIRFLOW		SUPPLY SUMMER AIR TEMP (°F)				SUPPLY WINTER AIR TEMP (°F)				EXHAUST AIRFLOW							
												ENT		LVG		ENT		LVG								
					HP	FLA	VOLTAGE	PHASE	HZ	AIRFLOW (CFM)	TOTAL SP (IN. WG.)	DB (°F)	WB (°F)	DB (°F)	WB (°F)	DB (°F)	WB (°F)	DB (°F)	WB (°F)	AIRFLOW (CFM)	TOTAL SP (IN. WG.)	HP	FLA	VOLTAGE	PHASE	HZ
AHU-1	CARRIER	39MN SIZE 12W	MECHANICAL ROOM 121	6160	10	13.8	460 V	3	60 Hz	2255	6.55	94.6	75.8	79.07	65.98	25.9	21.7	62.06	48.01	2155	2.30	5	6.9	460	3	60
AHU-2	CARRIER	39MN SIZE 12W	MECHANICAL ROOM 121	5800	10	13.8	460 V	3	60 Hz	2220	5.50	94.6	75.8	79.62	66.37	25.9	21.7	60.66	47.16	1995	2.30	5	6.9	460	3	60

AIR HANDLING UNIT SCHEDULE -(CONTINUED)

MARK	HEATING COIL DATA							DX COOLING COIL DATA							
		AIR TEMP (°F)							AIR TEMP (°F)						
									ENT		LVG				
	MAX. AIR VEL (FPM)	EAT (°F)	LAT (°F)	MAX. AIR PRESSURE DROP (IN.WG.)	CAPACITY OUTPUT (MBH)	CAPACITY INPUT (MBH)	FUEL	MAX. AIR VEL (FPM)	DB (°F)	WB (°F)	DB (°F)	WB (°F)	SENSIBLE CAP (MBH)	TOTAL CAP (MBH)	MAX. AIR PRESSURE DROP (IN. WG.)
AHU-1	630.8	62.1	110.9	0.21	320.0	400	NATURAL GAS	487.3	77.12	64.34	54.90	54.39	147.69	182.11	0.90
AHU-2	593.9	60.7	112.5	0.19	320.0	400	NATURAL GAS	458.9	77.39	64.54	54.54	54.09	142.94	180.00	0.78

AIR HANDLING UNIT SCHEDULE - (CONT)

MARK	SOUND DATA																MERV 13 FILTER TYPE	MERV 13 FILTER PRESSURE DROP FINAL (IN. WG.)	MERV 8 FILTER TYPE	OUTSIDE AIR MERV 8 FILTER PRESSURE DROP FINAL (IN. WG.)	EXHAUST AIR MERV 8 FILTER PRESSURE DROP FINAL (IN. WG.)	COMMENTS
	DISCHARGE SOUND POWER LEVEL (10^-12 WATTS)								INLET SOUND POWER LEVEL (10^-12 WATTS)													
	63 HZ	125 HZ	250 HZ	500 HZ	1000 HZ	2000 HZ	4000 HZ	8000 HZ	63 HZ	125 HZ	250 HZ	500 HZ	1000 HZ	2000 HZ	4000 HZ	8000 HZ						
AHU-1	93	93	92	95	86	85	81	77	84	84	88	92	82	74	75	72	4" PLEATED	0.88	2" PLEATED	0.58	0.05	01 02
AHU-2	92	91	92	93	84	83	78	75	83	82	91	91	78	72	73	70	4" PLEATED	0.87	2" PLEATED	0.58	0.45	01 02

01 PROVIDE BASIS OF DESIGN OR EQUAL.

02 PROVIDE WITH ULTRAVIOLET DISINFECTION SYSTEM.

AIR COOLED CONDENSING UNIT SCHEDULE

MARK	MANUFACTURER	MODEL NUMBER	SERVES	TOTAL HEAT REJECTION (TONS)	COOLING EAT DB (°F)	LIQUID LINE (IN)	VAPOR LINE (IN)	ELECTRICAL DATA					EER	NOTES
								VOLTAGE	PHASE	HZ	MCA	MOCP		
ACCU-1	CARRIER	38AUD016	AHU-1	15	99.6	1/2	1 3/8	460 V	3	60 Hz	29.9	40	13.4	01 02 03
ACCU-2	CARRIER	38AUD016	AHU-2	15	99.6	1/2	1 3/8	460 V	3	60 Hz	29.9	40	13.4	01 02 03

01 PROVIDE BASIS OF DESIGN OR EQUAL.

02 (2) LIQUID LINE SETS AND (2) SUCTION LINE SETS.

03 PROVIDE "ECOAT" OR SIMILAR ON COILS FOR CORROSION PROTECTION.

GRILLE, REGISTER, & DIFFUSER SCHEDULE

MARK	MANUFACTURER	MODEL	DESCRIPTION	NECK SIZE (IN)	MODULE SIZE (IN)	DESIGN AIRFLOW (CFM)	MAX. TOTAL PRESSURE DROP AT DESIGN AIRFLOW (IN WG)	FINISH	MATERIAL	COMMENTS
CD-1	TITUS	TMS	3 CONE, SQUARE PANEL	6	12" x 12"	150 CFM	0.073	STEEL	WHITE	01 02
CD-2	TITUS	TMS	3 CONE, SQUARE PANEL	8	12" x 12"	300 CFM	0.140	STEEL	WHITE	01 02
CD-3	TITUS	TMS	3 CONE, SQUARE PANEL	6	24" x 24"	150 CFM	0.063	STEEL	WHITE	01 02
CD-4	TITUS	TMS	3 CONE, SQUARE PANEL	8	24" x 24"	300 CFM	0.101	STEEL	WHITE	01 02
CD-5	TITUS	OMNI	SQUARE PLAQUE	6	12" x 12"	150 CFM	0.194	STEEL	WHITE	01 02
EG-1	TITUS	50F	EGGCRATE GRILLE WITH 1/2" x 1/2" x 1/2" CORE	10" x 10"	12" x 12"	350 CFM	0.025	ALUMINUM	WHITE	01 02
EG-2	TITUS	50F	EGGCRATE GRILLE WITH 1/2" x 1/2" x 1/2" CORE	22" x 22"	24" x 24"	1500 CFM	0.025	ALUMINUM	WHITE	01 02
RG-1	TITUS	50F	EGGCRATE GRILLE WITH 1/2" x 1/2" x 1/2" CORE	10" x 10"	12" x 12"	1050 CFM	0.05	ALUMINUM	WHITE	01 02
RG-2	TITUS	50F	EGGCRATE GRILLE WITH 1/2" x 1/2" x 1/2" CORE	22" x 22"	24" x 24"	2250 CFM	0.05	ALUMINUM	WHITE	01 02
SG-1	TITUS	300RL	DOUBLE DEFLECTION. 3/4" BLADE SPACING, SIDE GRILLE	6" x 6"	8" x 8"	50 CFM	0.016	STEEL	WHITE	01 02

01 REFER TO REFLECTED CEILING PLAN FOR CEILING TYPE FOR ALL DEVICES.

02 MAXIMUM NOISE LEVEL AT DESIGN AIRFLOW IS 30 NC FOR ALL DEVICES.

NOT FOR CONSTRUCTION

DATE | DESCRIPTION | MARK

ISSUE DATE: MM-DD-YYYY
SOLICITATION NO.: 70CMSW22Q00000001
CONTRACT NO.: 70Z05018DKZFNPL08

DESIGNED BY: FYE
DRAWN BY: FYE
CHECKED BY: TOSSEY
SUBMITTED BY: SUTZELL
SIZE: ANSI D

US IMMIGRATION AND CUSTOMS ENFORCEMENT (ICE)
9401 DESTINATION DRIVE
ORLANDO, FL 32827

KZF DESIGN
700 BROADWAY STREET
CINCINNATI, OH 45202

FT BENNING, GEORGIA
IMMIGRATION & CUSTOMS ENFORCEMENT (ICE)

SCHEDULE

SHEET ID
MCB
M-602

JAN 06, 2023 - FINAL SUBMITTAL (35%)

Ventilation Sizing Summary for [P] AHU-2

Project Name: 6600.11 - ICE MCB_2022-12-06
Prepared by: KZF Design Inc

12/13/2022
05:09PM

1. Summary

Ventilation Sizing Method ..... **ASHRAE Std 62.1-2016**
Design Condition ..... **Minimum flow (heating)**
Occupant Diversity (D) **1.000**
Uncorrected Outdoor Air Intake (Vou) ..... **1254** CFM
System Ventilation Efficiency (Ev) **0.565**
Outdoor Air Intake (Vot) ..... **2220** CFM

2. Space Ventilation Analysis

Zone Name / Space Name	Mult.	Minimum Supply Air (CFM) (Vpz)	Space Floor Area (ft²) (Az)	Area Outdoor Air Rate (CFM/ft²) (Ra)	Time Averaged Occupancy (Occupants) (Pz)	People Outdoor Air Rate (CFM/person) (Rp)	Air Distribution Effectiveness (Ez)	Space Outdoor Air (CFM) (Voz)	Breathing Zone Outdoor Air (CFM) (Vbz)	Space Ventilation Efficiency (Evz)
Zone 1										
100_Lobby	1	286	1462.0	0.06	14.6	5.00	0.8	**201**	*161*	0.862
103_Unisex RR	1	5	85.0	0.00	0.0	0.00	0.8	**0**	*0*	1.565
Zone 2										
101_Counseling	1	86	164.0	0.06	8.2	5.00	0.8	**64**	*51*	0.827
Zone 3										
102_Office	1	16	121.0	0.06	1.0	5.00	0.8	**15**	*12*	0.590
Zone 4										
106_Team Room	1	376	849.0	0.06	50.0	5.00	0.8	**376**	*301*	0.565
Zone 5										
105_Gear Locker Rm	1	412	2339.0	0.00	50.0	0.00	0.8	**0**	*0*	1.565
Zone 6										
122_Corridor S	1	132	616.0	0.06	1.0	0.00	0.8	**46**	*37*	1.214
Zone 7										
119_Classroom	1	810	1234.6	0.12	50.0	10.00	0.8	**810**	*648*	0.565
120_Control-Storage	1	97	328.0	0.12	1.0	5.00	0.8	**55**	*44*	0.993
Totals (incl. Space Multipliers)		**2220**							**1254**	**0.565**

Ventilation Sizing Summary for [P] AHU-1

Project Name: 6600.11 - ICE MCB_2022-12-06
Prepared by: KZF Design Inc

12/13/2022
05:09PM

1. Summary

Ventilation Sizing Method ..... **ASHRAE Std 62.1-2016**
Design Condition ..... **Minimum flow (heating)**
Occupant Diversity (D) **1.000**
Uncorrected Outdoor Air Intake (Vou) ..... **1378** CFM
System Ventilation Efficiency (Ev) **0.612**
Outdoor Air Intake (Vot) ..... **2251** CFM

2. Space Ventilation Analysis

Zone Name / Space Name	Mult.	Minimum Supply Air (CFM) (Vpz)	Space Floor Area (ft²) (Az)	Area Outdoor Air Rate (CFM/ft²) (Ra)	Time Averaged Occupancy (Occupants) (Pz)	People Outdoor Air Rate (CFM/person) (Rp)	Air Distribution Effectiveness (Ez)	Space Outdoor Air (CFM) (Voz)	Breathing Zone Outdoor Air (CFM) (Vbz)	Space Ventilation Efficiency (Evz)
Zone 1										
104_Workroom/Admin Stor	1	39	192.0	0.12	1.0	5.00	0.8	**35**	*28*	0.705
Zone 2										
107_Team Room	1	383	935.0	0.06	50.0	5.00	0.8	**383**	*306*	0.612
Zone 3										
109_Break Room	1	162	701.0	0.06	17.5	5.00	0.8	**162**	*130*	0.612
Zone 4										
108_Corridor	1	50	557.0	0.06	1.0	0.00	0.8	**42**	*33*	0.774
110_Men RR	1	20	320.0	0.00	0.0	0.00	0.8	**0**	*0*	1.612
111_Women RR	1	14	222.0	0.00	0.0	0.00	0.8	**0**	*0*	1.612
112_Janitors	1	12	146.0	0.00	0.0	0.00	0.8	**0**	*0*	1.612
113_Storage	1	24	299.0	0.00	0.0	0.00	0.8	**0**	*0*	1.612
Zone 5										
114_Gear Locker Rm	1	400	2301.0	0.00	50.0	0.00	0.8	**0**	*0*	1.612
Zone 6										
118_Classroom	1	810	1236.2	0.12	50.0	10.00	0.8	**810**	*648*	0.612
Zone 7										
117_Conference	1	245	631.0	0.06	31.6	5.00	0.8	**245**	*196*	0.612
Zone 8										
122_Corridor N	1	93	616.0	0.06	1.0	0.00	0.8	**46**	*37*	1.113
Totals (incl. Space Multipliers)		**2251**							**1378**	**0.612**

HUMIDIFIER SCHEDULE

MARK	SERVES	MANUFACTURER	MODEL NO.	STEAM GENERATOR UNIT LOCATION	DISPERSION UNIT MODEL	DISPERSION UNIT LOCATION	STEAM CAPACITY (LB / HR)	AIRFLOW (CFM)	DISPERSION AIR VELOCITY (FPM)	NATURAL GAS DATA		STEAM GENERATOR ELECTRICAL DATA				COMMENTS
										FUEL TYPE	INPUT (MBH)	FLA	VOLTAGE	PHASE	HZ	
H-1	AHU-1	DRI-STEEM	GTS LX-50	MECHANICAL ROOM 121	ULTRASORB XV	DUCTWORK	43	6160 CFM	500	NATURAL GAS	61	2.0 A	120 V	1	60 Hz	01 02 03 04 05 06
H-2	AHU-2	DRI-STEEM	GTS LX-50	MECHANICAL ROOM 121	ULTRASORB XV	DUCTWORK	43	5800 CFM	500	NATURAL GAS	61	2.0 A	120 V	1	60 Hz	01 02 03 04 05 06

01 PROVIDE BASIS OF DESIGN OR EQUAL.

02 DUCT MOUNTED DISTRIBUTOR.

03 PROVIDE WITH CONDENSATE COOLER KIT FOR CONDENSATE DRAIN LINE.

04 PROVIDE WITH PH NEUTRALIZATION KIT FOR FLUE GAS CONDENSATE DRAIN LINE.

05 PROVIDE WITH FLOOR STAND.

06 PROVIDE WITH NEMA-1 RATED INTEGRAL SAFETY SWITCH.

AUTOMATIC AIR DAMPER SCHEDULE

MARK	SERVES	SYSTEM	SIZE W x H (IN)	AIRFLOW (CFM)	COMMENTS
AAD-1	AHU-1	OUTSIDE AIR	20" x 18"	2255	01 02
AAD-2	AHU-2	OUTSIDE AIR	20" x 18"	2220	01 02

01 TRANSFORMER AND CONTROL CONNECTIONS BY MECHANICAL CONTRACTOR. 120V CONNECTIONS BY ELECTRICAL CONTRACTOR.

02 PROVIDE LOW LEAKAGE DAMPER WITH A MAXIMUM LEAKAGE RATE OF 3 CFM/SF WITH A DIFFERENTIAL PRESSURE OF 1" IN. WG. ACROSS THE DAMPER.

DATE
DESCRIPTION
MARK

ISSUE DATE: MM-DD-YYYY
SOLICITATION NO.: 70CMSW22Q00000001
CONTRACT NO.: 70Z05018KZFNPL08

DESIGNED BY: FYE
DRAWN BY: FYE
CHECKED BY: TOSSEY
SUBMITTED BY: HUTZEL
SIZE: ANSI D

US IMMIGRATION AND CUSTOMS ENFORCEMENT (ICE)
9454 RESEARCH DRIVE
ORLANDO, FL 32837

KZF DESIGN
700 BROADWAY STREET
CINCINNATI, OH 45202

FT BENNING, GEORGIA
IMMIGRATION & CUSTOMS ENFORCEMENT (ICE)

SCHEDULES

SHEET ID
MCB
M-603

JAN 06, 2023 - FINAL SUBMITTAL (35%)

NOT FOR CONSTRUCTION

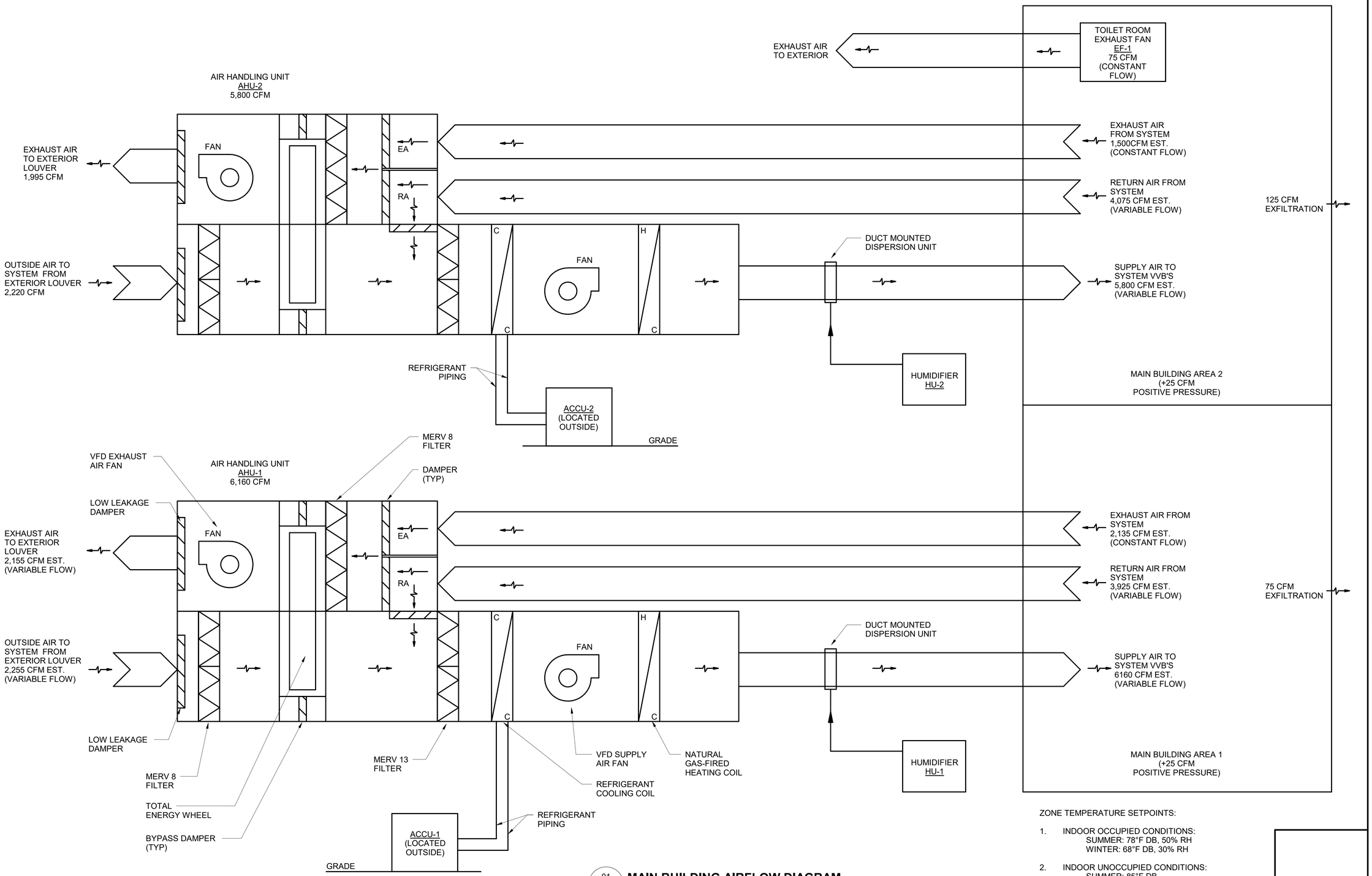

01 / M-604 **MAIN BUILDING AIRFLOW DIAGRAM**
NTS

ZONE TEMPERATURE SETPOINTS:

1. INDOOR OCCUPIED CONDITIONS:
   SUMMER: 78°F DB, 50% RH
   WINTER: 68°F DB, 30% RH

2. INDOOR UNOCCUPIED CONDITIONS:
   SUMMER: 85°F DB
   WINTER: 55°F DB

MARK	DESCRIPTION	DATE

DESIGNED BY: FYE
DRAWN BY: FYE
CHECKED BY: TOSSEY
SUBMITTED BY: HUTZEL
SIZE: ANSI D
ISSUE DATE: MM-DD-YYYY
SOLICITATION NO.: 70CMSW22Q00000001
CONTRACT NO.: 70Z05018KZFNPL08

US IMMIGRATION AND CUSTOMS ENFORCEMENT (ICE)
9454 ELDER CREEK DRIVE
ORLANDO, FL 32837

KZF DESIGN
700 BROADWAY STREET
CINCINNATI, OH 45202

FT BENNING, GEORGIA
IMMIGRATION & CUSTOMS ENFORCEMENT (ICE)

AIR SYSTEM DIAGRAM

SHEET ID
MCB
M-604

JAN 06, 2023 - FINAL SUBMITTAL (35%)

NOT FOR CONSTRUCTION

ZONE TEMPERATURE SETPOINTS:

1. INDOOR CONDITIONS:
   SUMMER/WINTER: 72°F DB, NO HUMIDITY CONTROL

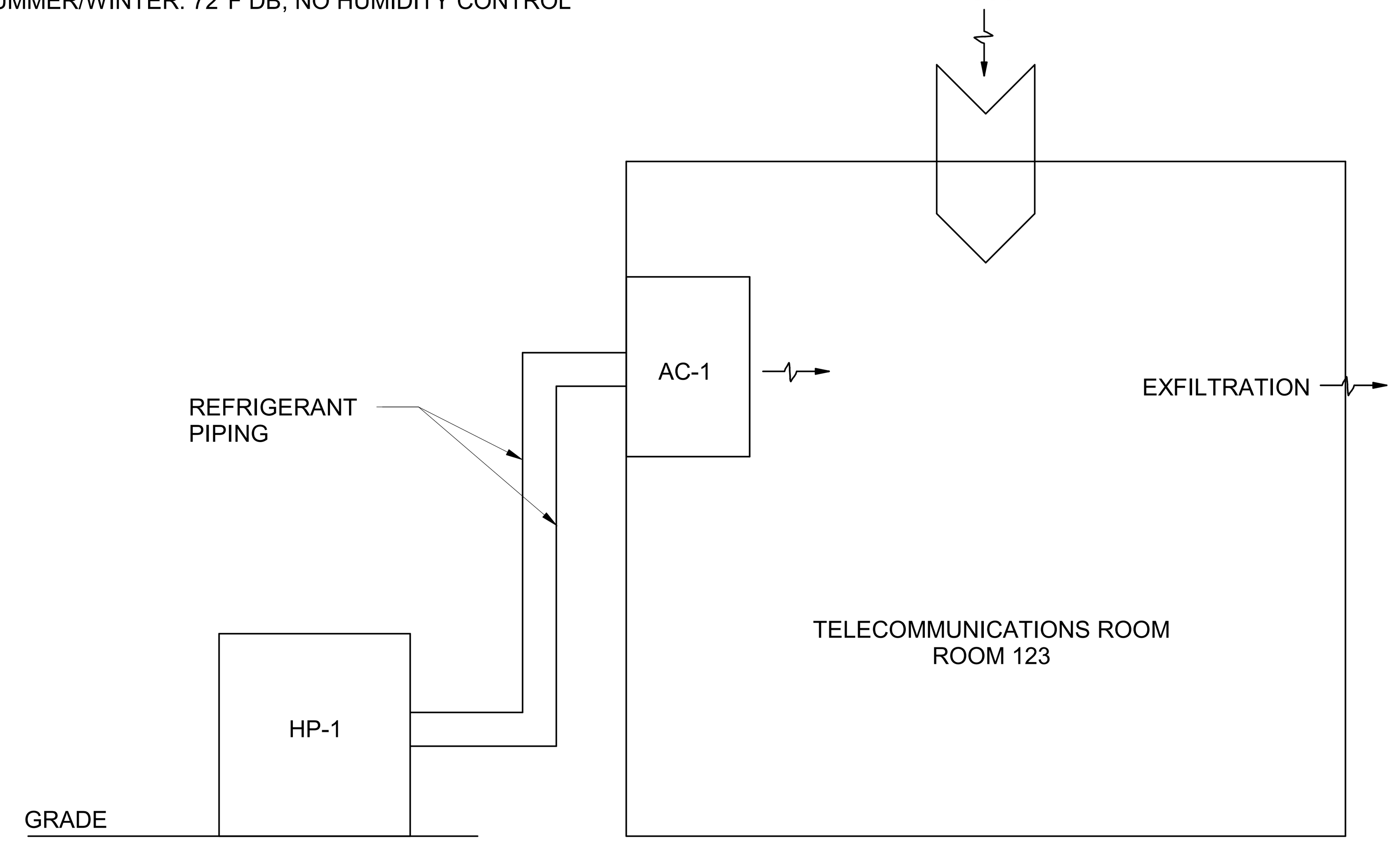

02 / M-605 **TELECOMMUNICATIONS ROOM AIR SYSTEM DIAGRAM**

NTS

NOTE:
DIAGRAM IS THE SAME FOR MECHANICAL AND ELECTRICAL ROOMS.
EQUIPMENT NAMES CHANGE AS LISTED BELOW:

ELECTRICAL ROOM 116
AC-2 / HP-2

MECHANICAL ROOM 115
AC-3 / HP-3

ZONE TEMPERATURE SETPOINTS:

1. INDOOR CONDITIONS:
   SUMMER: 80°F DB, NO HUMIDITY CONTROL
   WINTER: 40°F DB, NO HUMIDITY CONTROL

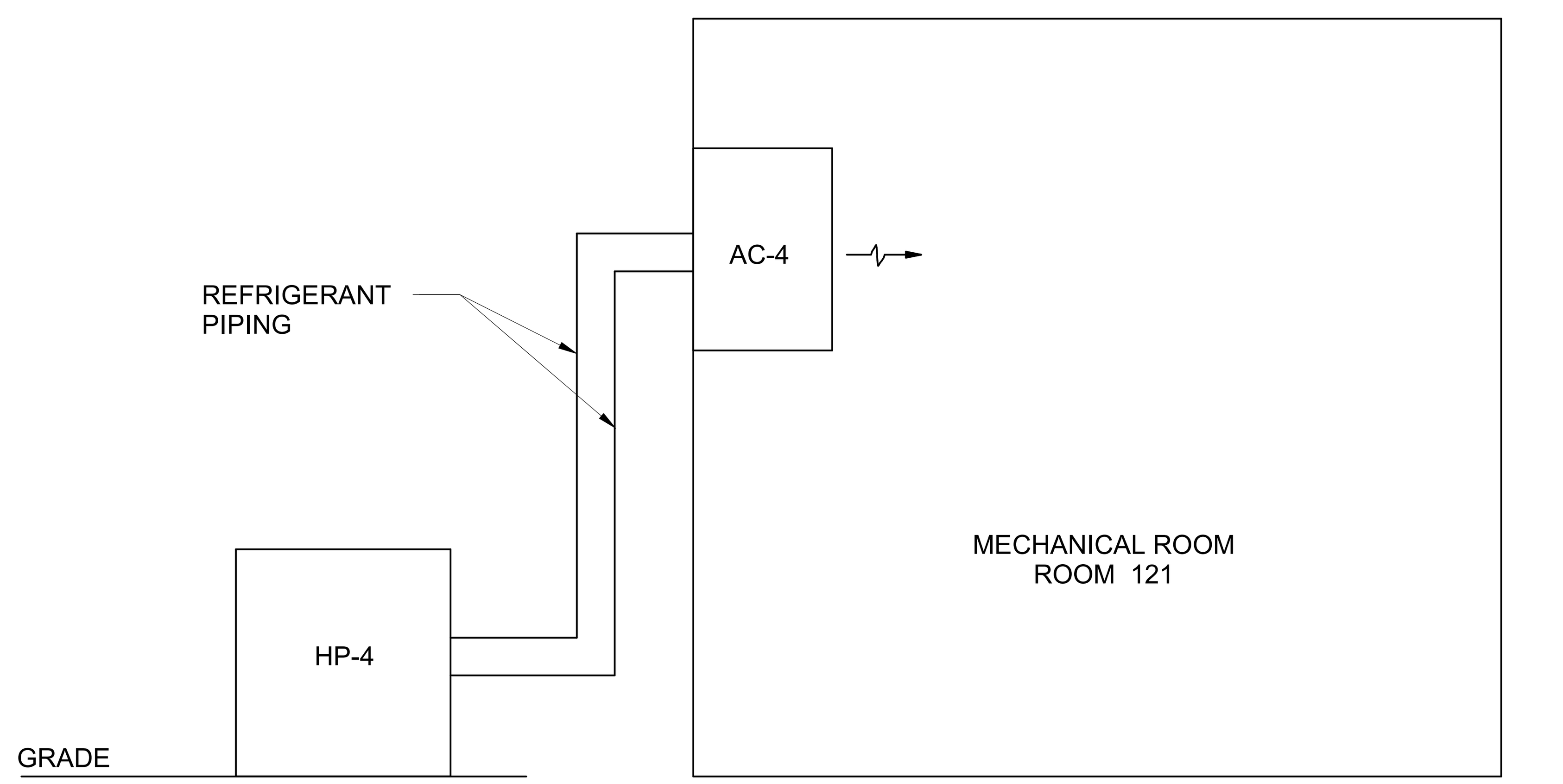

01 / M-605 **MECHANICAL ROOM AIR SYSTEM DIAGRAM**

NTS

MARK	DESCRIPTION	DATE

DESIGNED BY: FYE
DRAWN BY: FYE
CHECKED BY: TOSSEY
SUBMITTED BY: HUTZEL
SIZE: ANSI D
ISSUE DATE: MM-DD-YYYY
SOLICITATION NO.: 70CMSW22Q00000001
CONTRACT NO.: 70Z05018DKZFNPL08

US IMMIGRATION AND CUSTOMS ENFORCEMENT (ICE)
9495 DELEGATED DRIVE
ORLANDO, FL 32837

KZF DESIGN
700 BROADWAY STREET
CINCINNATI, OH 45202

FT BENNING, GEORGIA
IMMIGRATION & CUSTOMS ENFORCEMENT (ICE)

AIR SYSTEM DIAGRAM

SHEET ID
MCB
M-605

JAN 06, 2023 - FINAL SUBMITTAL (35%)

NOT FOR CONSTRUCTION

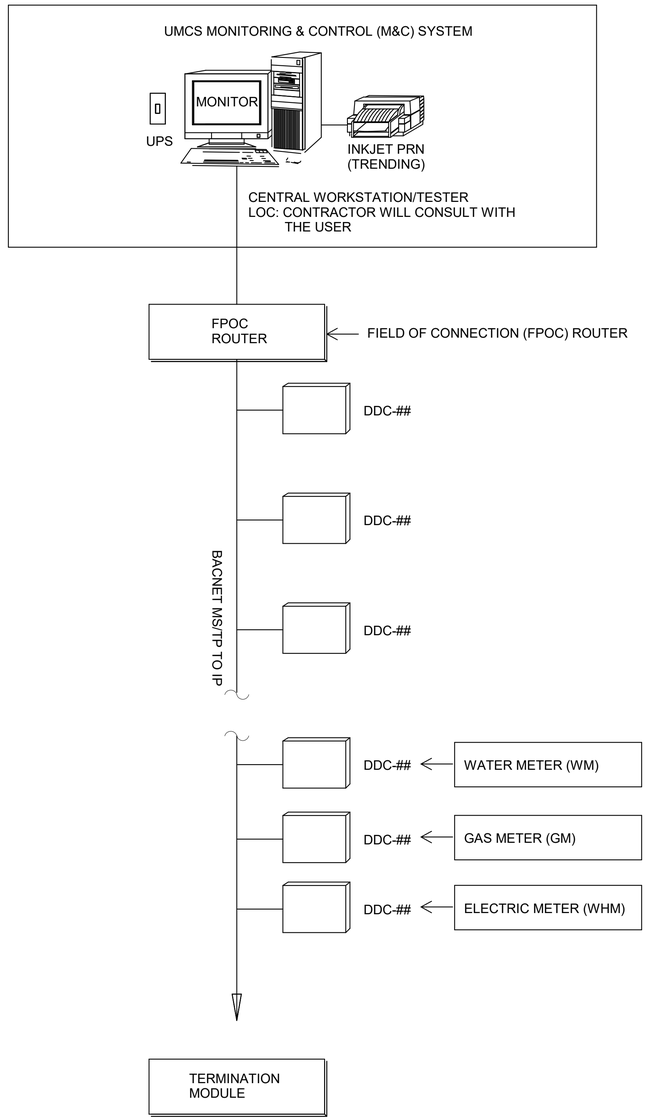

NOTE:
THE LOCATIONS OF CENTRAL WORKSTATION/TESTER, SHOWN ABOVE, ARE SUGGESTED LOCATIONS.
CONTROLS CONTRACTOR SHALL CONSULT WITH THE USER TO LOCATE THE CENTRAL WORKSTATION/TESTER.

03 M-701 **BUILDING LEVEL M&C SCHEMATIC**
NTS

	SYSTEM DEFAULT SCHEDULE		SUPERVISORY MONITORING & CONTROL SCHEDULE			# OCC SENSORS TO PUT AHU IN OCC MODE
SYSTEM	OCCUPIED	UNOCCUPIED	OCCUPIED	UNOCCUPIED	WARM-UP	
ALL	M-F 0500-2200	OTHERWISE	M-F 0700-1600	OTHERWISE	M-F 0600-0700	2

NOTE:
SAMPLE OCCUPANCY SCHEDULE. COORDINATE WITH CONTRACTING OFFICER TO ADJUST SCHEDULE TO REFLECT ACTUAL OPERATING HOURS PRIOR TO BUILDING COMPLETION.

02 M-701 **OCCUPANCY SCHEDULE**
NTS

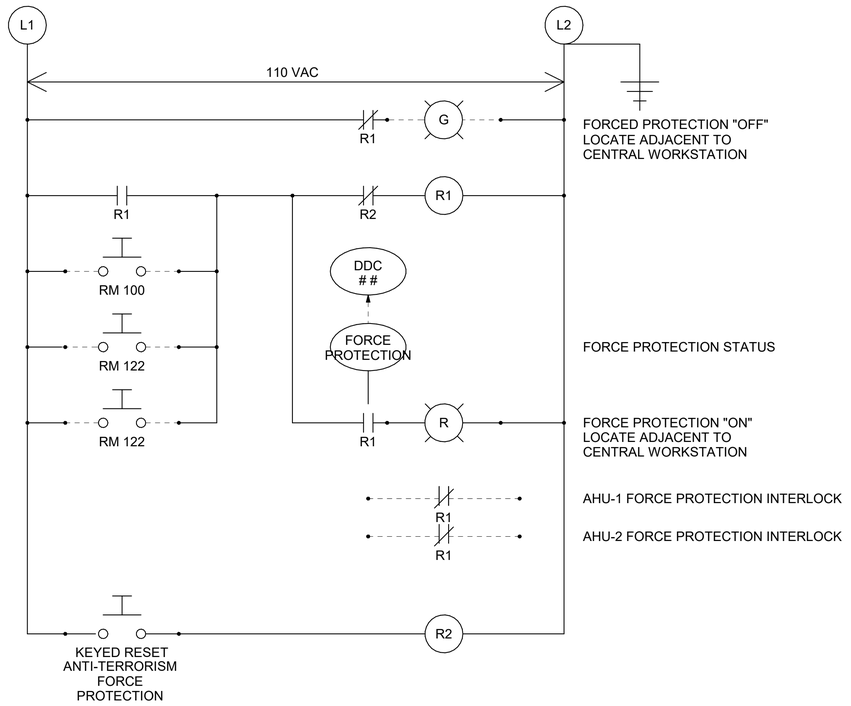

LADDER DIAGRAM

SWITCH
(PUSH BUTTON ON/OFF
SWITCH WITH COVER AND
SIGNAGE TO READ "HVAC
FORCE PROTECTION
SHUTDOWN SWITCH")

NOTE:
HVAC SHUTDOWN SWITCHES TO BE LOCATED IN ROOMS 100 AND 122 . WHEN SWITCH IS ACTIVATED, ALL HVAC SHUTDOWN SYSTEMS CONNECTED TO SWITCH WILL SHUT DOWN.

01 M-701 **ANTI-TERRORISM FORCE PROTECTION CONTROLS**
NTS

MARK	DESCRIPTION	DATE

DESIGNED BY: FYE
DRAWN BY: FYE
CHECKED BY: TOSSEY
ISSUE DATE: MM-DD-YYYY
SOLICITATION NO.: 70CMSW22Q00000001
CONTRACT NO.: 70Z05018KZFNPL08
SUBMITTED BY: HUTZEL
SIZE: ANSI D

US IMMIGRATION AND CUSTOMS ENFORCEMENT (ICE)
9454 ELLIS ROAD EAST DRIVE
ORLANDO, FL 32837

KZF DESIGN
700 BROADWAY STREET
CINCINNATI, OH 45202

FT BENNING, GEORGIA
IMMIGRATION & CUSTOMS ENFORCEMENT (ICE)

CONTROLS

SHEET ID
MCB
M-701

JAN 06, 2023 - FINAL SUBMITTAL (35%)

NOT FOR CONSTRUCTION

ELECTRICAL SYMBOLS

LIGHTING

- LIGHT FIXTURE IDENTIFIERS: A = TYPE MARK, 2 = CIRCUIT NUMBER, a = SWITCH LEG. SEE FIXTURE SCHEDULE FOR DETAILS (TYPICAL ALL LIGHT FIXTURE SYMBOLS)
- EMERGENCY LIGHT FIXTURE INDICATED BY SHADING, NL = NIGHT LIGHT
- RECESSED LIGHT FIXTURE
- PENDANT LIGHT FIXTURE
- SURFACE MOUNT LIGHT FIXTURE
- EXTERIOR WALL PACK
- EXTERIOR AREA POLE LIGHT
- EXIT LIGHT FIXTURE: SHADED QUADRANT INDICATES LETTERED FACE, ARROW INDICATES DIRECTION
- PHOTO ELECTRIC SENSOR, CEILING MOUNTED
- OCCUPANCY SENSOR, CEILING MOUNTED
- DAYLIGHT SENSOR, CEILING MOUNTED
- SWITCH, a = SWITCH LEG, X = SUPERSCRIPT

NOTE: THE FOLLOWING SUPERSCRIPTS ARE USED TO INDICATE VARIOUS TYPES OF SWITCHES

NO SUPERSCRIPT	SINGLE POLE
2	DOUBLE POLE
3	THREE WAY
4	FOUR WAY
D	DIMMER SWITCH
OS	OCCUPANCY SENSOR
K	KEY OPERATED
T	TIMER
WP	WEATHERPROOF
TC	TIME CLOCK

RECEPTACLES

- DUPLEX RECEPTACLE, NEMA 5-20, MOUNTED 18" AFF UNLESS NOTED OTHERWISE
- GFCI DUPLEX RECEPTACLE, NEMA 5-20, MOUNTED 18" AFF UNLESS NOTED OTHERWISE
- DUPLEX RECEPTACLE MOUNTED ABOVE COUNTER, NEMA 5-20
- GFCI DUPLEX RECEPTACLE MOUNTED ABOVE COUNTER, NEMA 5-20
- QUADRUPLEX RECEPTACLE, NEMA 5-20, MOUNTED 18" AFF UNLESS NOTED OTHERWISE
- TAMPER-RESISTANT DUPLEX RECEPTACLE, NEMA 5-20, MOUNTED 18" AFF UNLESS NOTED OTHERWISE
- TAMPER-RESISTANT, GFCI DUPLEX RECEPTACLE, NEMA 5-20, MOUNTED 18" AFF UNLESS NOTED OTHERWISE
- TAMPER-RESISTANT DUPLEX RECEPTACLE MOUNTED ABOVE COUNTER, NEMA 5-20
- TAMPER-RESISTANT, GFCI DUPLEX RECEPTACLE MOUNTED ABOVE COUNTER, NEMA 5-20
- TAMPER-RESISTANT QUADRUPLEX RECEPTACLE, NEMA 5-20, MOUNTED 18"AFF UNLESS NOTED OTHERWISE
- TAMPER-RESISTANT QUADRUPLEX RECEPTACLE MOUNTED ABOVE COUNTER, NEMA 5-20
- DUPLEX RECEPTACLE MOUNTED FLUSH IN THE FLOOR, NEMA 5-20
- DUPLEX RECEPTACLE, CEILING MOUNT, NEMA 5-20
- SPECIAL RECEPTACLE, 1-PHASE
- SPECIAL RECEPTACLE, 3-PHASE

NOTE: THE FOLLOWING SUBSCRIPTS ARE USED TO INDICATE VARIOUS TYPES OF RECEPTACLES

WP	WEATHER PROOF, WITH WHILE-IN-USE COVER
EXP	EXPLOSION PROOF
IG	ISOLATED GROUND
U	USB PORTS INTEGRATED

POWER

- H1A — PANELBOARD, H1A = PANEL NAME
- SB1 — SWITCHBOARD, SB1 = SWITCHBOARD NAME
- T1 — TRANSFORMER, T1 = TRANSFORMER NAME
- MTS — MANUAL TRANSFER SWITCH, MTS = SWITCH NAME
- DISCONNECT SWITCH
- JUNCTION BOX
- POWER/ DATA POLE
- FB# — FLOOR BOX, FB# = IDENTIFIER. REFER TO SCHEDULE
- PLUG IN RECEPTACLE STRIP
- PUSH BUTTON STATION
- $X — SWITCH, X = SUPERSCRIPT

NOTE: THE FOLLOWING SUPERSCRIPTS ARE USED TO INDICATE VARIOUS TYPES OF SWITCHES

CB	CIRCUIT BREAKER
K	KEY OPERATED
LV	LOW VOLTAGE
MC	MOMENTARY CONTACT
M	MOTOR RATED
MD	MOTORIZED DOOR
MS	MOTORIZED SCREEN
P	PILOT LIGHTING
T	TIMER
WP	WEATHER PROOF

SITE POWER

- E — OVERHEAD ELECTRIC
- E — UNDERGROUND ELECTRIC
- T — PAD MOUNT TRANSFORMER
- M — MANHOLE
- H — HANDHOLE
- UTILITY POWER POLE
- POLE MOUNTED TRANSFORMER

SINGLE LINE DIAGRAM

- H1A, 480/277V, 400A — POWER PANEL; H1A = PANEL NAME; 480/277V = VOLTAGE; 400A = AMPERAGE RATING
- CIRCUIT BREAKER
- FUSIBLE SWITCH
- TRANSFORMER
- TRANSFER SWITCH
- GROUND
- KEY INTERLOCK DEVICE
- M — METER

CIRCUIT DESIGNATIONS

- CONDUIT CONCEALED IN WALL OR CEILING
- CONDUIT EXPOSED
- CONDUIT IN OR BELOW SLAB OR GRADE
- H1A-1,3,5 — CIRCUIT HOME RUN; H1A = PANEL; 1,3,5 = CIRCUIT NUMBER

LIGHTNING PROTECTION AND GROUNDING

- AIR TERMINAL
- GROUNDING ROD
- TW — GROUND TEST WELL
- DOWN CONDUCTOR CONNECTION TO GROUND
- G — GRID COUNTERPOISE CONDUCTOR
- RC — LIGHTNING PROTECTION ROOF CONDUCTOR
- DC — LIGHTNING PROTECTION DOWN CONDUCTOR

DATA AND TELEPHONE

- TELEPHONE WALL OUTLET
- DATA WALL OUTLET
- MULTI-MEDIA WALL OUTLET

FIRE DETECTION AND ALARM SYSTEMS

- [FACP] — FIRE ALARM CONTROL PANEL
- [FAAP] — FIRE ALARM REMOTE ANNUNCIATOR PANEL
- F — FIRE ALARM MANUAL PULL STATION
- F — FIRE ALARM HORN AND STROBE, WALL MOUNT
- F — FIRE ALARM STROBE ONLY, WALL MOUNT
- F — FIRE ALARM SPEAKER AND STROBE, WALL MOUNT
- F — FIRE ALARM HORN AND STROBE, CEILING MOUNT
- F — FIRE ALARM STROBE ONLY, CEILING MOUNT
- F — FIRE ALARM SPEAKER AND STROBE, CEILING MOUNT
- S — SMOKE DETECTOR
- D — DUCT TYPE SMOKE DETECTOR

ANNOTATION SYMBOLS

- XX — REVISION TAG
- XX — DEMOLITION DRAWING NOTE
- XX — NEW WORK DRAWING NOTE
- 05 / E102 — DETAIL CALLOUT, 05 = DETAIL NUMBER, E102 = DRAWING ON WHICH DETAIL IS SHOWN

ELECTRICAL ABBREVIATIONS

A/C	AIR CONDITIONING
ACC	AIR COOLED CONDENSOR
ACCU	AIR COOLED CONDENSING UNIT
AFF	ABOVE FINISHED FLOOR
AHU	AIR HANDLER UNIT
AMP	AMPERE
ATS	AUTOMATIC TRANSFER SWITCH
AUX	AUXILIARY
A/V	AUDIO / VISUAL
AVG	AVERAGE
AWG	AMERICAN WIRE GAUGE
BLDG	BUILDING
C	CONDUIT
CATV	CABLE TELEVISION
CB	CIRCUIT BREAKER
CCTV	CLOSED CIRCUIT TELEVISION
CHP	CHILLED WATER PUMP
CKT	CIRCUIT
CLG	CEILING
COMB	COMBINATION
CU	CONDENSING UNIT
CU	COPPER
CUH	CABINET UNIT HEATER
CWP	CONDENSOR WATER PUMP
DIA	DIAMETER
DISC SW	DISCONNECT SWITCH
DP	DISTRIBUTION PANEL
DWG	DRAWING
EC	ELECTRICAL CONTRACTOR
EF	EXHAUST AIR FAN
EHC	ELECTRIC HEATING COIL
EMT	ELECTRIC METALLIC TUBING
EWC	ELECTRIC WATER COOLER
EWH	ELECTRIC WATER HEATER
EXH	EXHAUST
FA	FIRE ALARM
FAAP	FIRE ALARM ANNUNCIATOR PANEL
FACP	FIRE ALARM CONTROL PANEL
FC	FOOTCANDLE
FDR	FEEDER
FT	FEET
FLA	FULL LOAD AMPERE
FLR	FLOOR
GEN	GENERATOR
GFI	GROUND CIRCUIT INTERRUPTER
GRD	GROUND
HP	HORSEPOWER
HTR	HEATER
HWP	HOT WATER PUMP
IN	INCH
JB	JUNCTION BOX
KV	KILOVOLTS
KVA	KILOVOLT-AMPERE
KW	KILOWATT
KWH	KILOWATT HOUR
LP	LIGHTING PANEL
MAT	MATERIAL
MAU	MAKEUP AIR UNIT
MAX	MAXIMUM
MC	METAL-CLAD CABLE
MCB	MOLDED CASE CIRCUIT BREAKER
MCC	MOTOR CONTROL CENTER
MCM	1000 CIRCULAR MILS
MDP	MAIN DISTRIBUTION PANEL
MECH	MECHANICAL
MFR	MANUFACTURER
MCRW	MICROWAVE
MIN	MINIMUM
MISC	MISCELLANEOUS
MLO	MAIN LUGS ONLY
MS	MOTOR STARTER
MSB	MAIN SWITCHBOARD
MTR	MOTOR
NF	NON-FUSED
NIC	NOT IN CONTRACT
NL	NIGHT LIGHT
NTS	NOT TO SCALE
PNL	PANEL
REFR	REFRIGERATOR
RTU	ROOF TOP AIR CONDITIONING UNIT
SB	SWITCHBOARD
SCH	SCHEDULE
SD	SMOKE DETECTOR
T	THERMOSTAT
TEL	TELEPHONE
THRU	THROUGH
TRANS	TRANSFORMER
TS	TAMPER SWITCH
TTB	TELEPHONE TERMINAL BOARD
TV	TELEVISION
TYP	TYPICAL
UCREFR	UNDER COUNTER REFRIGERATOR
UL	UNDERWRITERS LABORATORIES
UPS	UNINTERRUPTABLE POWER SUPPLY
UH	UNIT HEATER
V	VOLT
WP	WEATHERPROOF
XFMR	TRANSFORMER
Y	WYE

NOTE: THIS LEGEND IS COMPOSED OF STANDARD ABBREVIATIONS AND APPLIES TO THE SET OF DRAWINGS TO THE EXTENT APPLICABLE.

U.S. DEPARTMENT OF HOMELAND SECURITY

MARK	DESCRIPTION	DATE

DESIGNED BY: FRANKLIN
DRAWN BY: FRANKLIN
CHECKED BY: STEGMAN
ISSUE DATE: MM-DD-YYYY
SOLICITATION NO.: 70CMSW22Q00000001
CONTRACT NO.: 70Z05018DKZFNPL08
SUBMITTED BY: HUTZEL
SIZE: ANSI D

US IMMIGRATION AND CUSTOMS ENFORCEMENT (ICE)
9400 DISCOVERY BLVD
ORLANDO, FL 32827

KZF DESIGN
700 BROADWAY ST
CINCINNATI, OH 45202

FT. BENNING, GA
MAIN CLASSROOM BUILDING

SYMBOLS & ABBREVIATIONS

SHEET ID
MCB
E-001

JAN 06, 2023 - FINAL SUBMITTAL (35%)

NOT FOR CONSTRUCTION

ELECTRICAL GENERAL NOTES

A ALL WORK SHALL BE PREFORMED PER LATEST NATIONAL ELECTRICAL CODE (NEC). ALL WORK SHALL BE PERFORMED BY A LICENSED ELECTRICIAN.

B ALL WIRING SHALL BE IN RACEWAYS. MINIMUM SIZE CONDUIT SHALL BE 3/4".

C ALL WIRING SHALL BE COPPER. MINIMUM WIRE SIZE SHALL BE #12 AWG., THHN/THWN INSULATED.

D ALL CIRCUITS SHALL HAVE A DEDICATED NEUTRAL, AND A GREEN INSULATED GROUNDING CONDUCTOR.

E CIRCUITS SHALL NOT BE COMBINED WITHOUT PERMISSION FROM DESIGN ENGINEER.

F ALL ELECTRICAL EQUIPMENT DEVICES SHALL BE GROUNDED AS PER NEC, ARTICLE 250.

G UNLESS INDICATED, ALL EMERGENCY EGRESS PATHWAY LIGHTING SHALL BE CONNECTED TO UNSWITCHED HOT PHASE CONDUCTOR FROM THE CIRCUIT SUPPLYING POWER TO RESPECTIVE AREA. CONNECT ALL EMERGENCY LIGHTING, NIGHT LIGHTING, AND EXIT SIGNS AHEAD OF LOCAL LIGHTING CONTROL TO THE CIRCUIT SERVING THE AREA.

H ALL EMERGENCY EGRESS LIGHTING SHALL BE UTILIZED AS NIGHT LIGHT IN THE AREA, UNLESS NOTED OTHERWISE.

I PANELBOARD SHALL HAVE COPPER BUSES, 100% CAPACITY NEUTRAL BUS, AND GROUND BUS.

J VOLTAGE DROP IN BRANCH CIRCUITS SHALL NOT EXCEED 3%. TOTAL VOLTAGE DROP INCLUDING FEEDER AND BRANCH CIRCUIT SHALL NOT EXCEED 5%. USE NEC TABLE 9 TO CALCULATE VOLTAGE DROP.

K THE CONTRACTOR IS EXPECTED TO BE FAMILIAR WITH THE TERMS, LEGENDS, AND ABBREVIATIONS USED IN THE TRADE. IN THE EVENT THAT ANY TERM, LEGEND, OR ABBREVIATION USED IN THE SPECIFICATIONS OR ON DRAWINGS IS NOT CLEAR TO THE CONTRACTOR, CLARIFICATION SHALL BE REQUESTED DURING THE BIDDING PERIOD. THE FAILURE TO UNDERSTAND ANY SUCH TERM, LEGEND, OR ABBREVIATION SHALL NOT BE USED AS A BASIS FOR A CHANGE IN CONTRACT COST.

L LIST OF EQUIPMENT, TABULATIONS OF DATA, AND SCHEDULES APPEARING IN THE SPECIFICATIONS OR ON THE DRAWINGS ARE INCLUDED ONLY FOR THE ASSISTANCE AND GUIDANCE OF THE CONTRACTOR IN ARRIVING AT A MORE COMPLETE UNDERSTANDING OF THE INTENDED INSTALLATION. THEY ARE NOT INTENDED, NOR TO BE CONSTRUED, AS RELIEVING THE RESPONSIBILITY OF THE CONTRACTOR IN MAKING THEIR OWN TAKE-OFF AND PROVIDING ALL REQUIRED WORK.

M PROVIDE GROUNDING TYPE INSULATING BUSHING ON ALL IMC AND RGS CONDUIT ENDS. PROVIDE INSULATED THROAT FOR ALL EMT CONDUIT OPENINGS. PROVIDE MINIMUM #6 JUMPER CONNECTION FROM GROUNDING TERMINAL IN EACH BOX AND PANEL TO ALL GROUNDING TYPE BUSHINGS.

N COORDINATE ALL ELECTRICAL WORK WITH OTHER TRADES.

O COORDINATE ALL HVAC EQUIPMENT BREAKER SIZES WITH SHOP DRAWINGS.

P CONTRACTORS ARE FREE TO USE ANY PRODUCT WHICH MEETS THE GOVERNMENT'S MINIMUM REQUIREMENTS AND NOT IN CONFLICT WITH OTHER CONTRACT PROVISIONS. UNLESS INDICATED OTHERWISE ON THE PLANS OR SPECIFICATIONS (E.G. SOLE-SOURCE), ALL LISTED MANUFACTURERS ARE THE BASIS OF DESIGN. FOR THESE BASIS OF DESIGN PRODUCTS, OTHER MANUFACTURERS MAY BE SUBSTITUTED AS LONG AS THE STANDARD OF QUALITY AND CHARACTERISTICS OF THE SUBSTITUTED MANUFACTURER MEET OR EXCEED THE STANDARD OF QUALITY AND CHARACTERISTICS OF THE BASIS OF DESIGN.

LIGHTING CONTROL SEQUENCE OF OPERATIONS

NOTES

1. ALL LIGHTING CONTROLS SHALL COMPLY TO ASHRAE 90.1 2019 REQUIREMENTS IN COORDINATION WITH LEED CERTIFIED V4.
2. ALL SPACES WITH LIGHTING CONTROLS SHALL BE ROUTED THROUGH LIGHTING CONTROL PANEL [LCP].
3. ALL DIMMER SWITCHES SHALL HAVE MANUAL ON/OFF FUNCTIONALITY.
4. ALL FIXTURES SHALL HAVE CONTINUOUS DIMMING (0-10V).
5. ALL DAYLIGHT HARVESTING ZONES SHALL COMPLY WITH ASHRAE 90.1 2019.
6. DAYLIGHTING PHOTOCELL SHALL OVERRIDE OCCUPANCY OUTPUT WHERE UTILIZED.
7. UNDER A LOSS OF NORMAL POWER, EMERGENCY LIGHT FIXTURES SHALL PROVIDE FULL OUTPUT (100% ON).
8. LIGHT FIXTURES DESIGNATED AS NIGHT LIGHT (NL) ARE ALSO EMERGENCY LIGHTS. WIRE NIGHT LIGHT/ EMERGENCY FIXTURES TO ALLOW CONTROL WITH OTHER LIGHT FIXTURES IN THE AREA BUT ALSO AS EGRESS LIGHTING SO THAT NIGHT LIGHTS REMAIN ON WHEN OTHER LIGHTS ARE TURNED OFF. WHEN NORMAL POWER FAILS, THE NIGHT LIGHTS SHALL REMAIN ON FROM THE 90-MINUTE BATTERY BACKUP.
9. PROVIDE SINGLE SWITCH NEXT TO LIGHTING CONTROL PANEL TO SWEEP ALL LIGHTING ON FOR 30 MINS AS BUILDING PHOTOGRAPHY MODE.
10. REFER TO THE MECHANICAL SERIES FOR ADDITIONAL INTEGRATED CONTROL REQUIREMENTS. THE MECHANICAL CONTROL SYSTEM SHALL BE CONTROLLED BY SAME OCCUPANCY SENSOR AND SWITCH AS LIGHTING.

INTERIOR LIGHTING CONTROL

MAIN LOBBY:
ROUTE THROUGH LCP [TIME CLOCK]
CONTINUOUS DIMMING (0-10V, ON/OFF) LOCATED AT LCP AND AT RECEPTION DESKS.
LOCAL OVERRIDE SWITCHES AT ALL ENTRY POINTS.
AS APPLICABLE: DAYLIGHT HARVESTING, ZONES AS INDICATED ON PLANS PER ASHRAE 90.1 9.4.1.4 WITH A SET POINT OF 30FC.

DURING NORMAL BUSINESS HOURS:
NORMAL: AS SET BY DIMMER SWITCH
EMERGENCY: AS SET BY DIMMER SWITCH, NEVER LESS THAN 25% DIMMED

AFTER NORMAL BUSINESS HOURS:
NORMAL: 0% ON, 1HR LOCAL OVERRIDE ON TO LEVEL SET BY DIMMER SWITCH
EMERGENCY: SET TO AN AVERAGE OF 1 FC, 1HR LOCAL OVERRIDE ON TO LEVEL SET BY DIMMER SWITCH

UNDER A LOSS OF NORMAL POWER EMERGENCY LIGHT FIXTURES SHALL PROVIDE FULL OUTPUT (100% ON).

EMERGENCY FIXTURES SHALL NEVER BE 100% OFF.

RECEPTION/ VESTIBULE:
CONTINUOUS DIMMING (0-10V, ON/OFF).
OCCUPANCY SENSOR [OCCUPANCY MODE].

LOCKERS/ RESTROOMS:
CONTINUOUS DIMMING (0-10V, ON/OFF).
OCCUPANCY SENSOR [OCCUPANCY MODE].

NORMAL:
OCCUPIED: 100% ON
UNOCCUPIED: 100% OFF

EMERGENCY:
OCCUPIED: 100% ON
UNOCCUPIED: 50% ON

UNDER A LOSS OF NORMAL POWER EMERGENCY LIGHT FIXTURES SHALL PROVIDE FULL OUTPUT (100% ON).

EMERGENCY FIXTURES SHALL NEVER BE 100% OFF.

MULTI-PURPOSE:
NORMAL & EMERGENCY:
ZONED AS INDICATED ON PLANS.
CONTINUOUS DIMMING (0-10V, ON/OFF).
DAYLIGHT HARVESTING, ZONES AS INDICATED ON PLANS PER ASHRAE 90.1 9.4.1.4 WITH A SET POINT OF 50FC.
OCCUPANCY SENSOR [OCCUPANCY MODE].
SEPARATE UP/DOWN SHADE CONTROLS, COORDINATE EXACT SHADE ZONES WITH ARCHITECTURAL SERIES.
WHERE INDICATED MOTORIZED WINDOW SHADE ZONES SHALL OPERATE IN UNISON AND INDEPENDENT OF THE LIGHTING WITH UP/STOP/DOWN CONTROL.

UNDER A LOSS OF NORMAL POWER EMERGENCY LIGHT FIXTURES SHALL PROVIDE FULL OUTPUT (100% ON).

OPEN OFFICE:
CONTINUOUS DIMMING (0-10V, ON/OFF).
ZONED AS INDICATED ON PLANS.
AS APPLICABLE: DAYLIGHT HARVESTING, ZONES AS INDICATED ON PLANS PER ASHRAE 90.1 9.4.1.4 WITH A SET POINT OF 30FC.

DURING NORMAL BUSINESS HOURS:
NORMAL & EMERGENCY:
OCCUPIED: 100% ON
UNOCCUPIED: 50% ON

AFTER NORMAL BUSINESS HOURS:
NORMAL:
OCCUPIED: 100% ON
UNOCCUPIED: 100% OFF

EMERGENCY:
OCCUPIED: 100% ON
UNOCCUPIED: 50% ON

UNDER A LOSS OF NORMAL POWER EMERGENCY LIGHT FIXTURES SHALL PROVIDE FULL OUTPUT (100% ON).

EMERGENCY FIXTURES SHALL NEVER BE 100% OFF.

PRIVATE OFFICES:
CONTINUOUS DIMMING (0-10V, ON/OFF).
OCCUPANCY SENSOR [VACANCY MODE].
AS APPLICABLE, DAYLIGHT HARVESTING, ZONES AS INDICATED ON PLANS PER ASHRAE 90.1 9.4.1.4 WITH A SET POINT OF 50FC.

BREAK ROOM/ PERSONAL HEALTH:
CONTINUOUS DIMMING (0-10V, ON/OFF).
OCCUPANCY SENSOR [VACANCY MODE].
DAYLIGHT HARVESTING, ZONES AS INDICATED ON PLANS PER ASHRAE 90.1 9.4.1.4. WITH A SET POINT OF 40FC.

KITCHEN
CONTINUOUS DIMMING (0-10V, ON/OFF).
OCCUPANCY SENSOR [VACANCY MODE].

CONFERENCE:
NORMAL & EMERGENCY:
ZONED AS INDICATED ON PLANS
CONTINUOUS DIMMING (0-10V, ON/OFF).
OCCUPANCY SENSOR [OCCUPANCY MODE].
AS APPLICABLE DAYLIGHT HARVESTING, ZONES AS INDICATED ON PLANS PER ASHRAE 90.1 9.4.1.4 WITH A SET POINT OF 50FC.

UNDER A LOSS OF NORMAL POWER EMERGENCY LIGHT FIXTURES SHALL PROVIDE FULL OUTPUT (100% ON).

CORRIDORS:
ROUTE THROUGH LCP [TIME CLOCK]
DIMMING (0-10V, ON/OFF) LOCATED AT LCP
LOCAL OVERRIDE SWITCHES LOCATED AT ALL ENTRY POINTS
ZONED AS INDICATED ON PLANS.
NIGHTLIGHTS (NL) AS INDICATED.
AS APPLICABLE: DAYLIGHT HARVESTING, ZONES AS INDICATED ON PLANS PER ASHRAE 90.1 9.4.1.4 WITH A SET POINT OF 30FC.

DURING NORMAL BUSINESS HOURS:
NORMAL: AS SET BY DIMMER SWITCH
EMERGENCY: AS SET BY DIMMER SWITCH, NEVER LESS THAN 25% DIMMED

AFTER NORMAL BUSINESS HOURS:
NORMAL: 0% ON, 1HR LOCAL OVERRIDE ON TO LEVEL SET BY DIMMER SWITCH
EMERGENCY: SET TO AN AVERAGE OF 1 FC, 1HR LOCAL OVERRIDE ON TO LEVEL SET BY DIMMER SWITCH

UNDER A LOSS OF NORMAL POWER EMERGENCY LIGHT FIXTURES SHALL PROVIDE FULL OUTPUT (100% ON).

EMERGENCY FIXTURES SHALL NEVER BE 100% OFF.

SERVER/IDF/MDF/CODIS/TELCOM:
CONTINUOUS DIMMING (0-10V, ON/OFF).
OCCUPANCY SENSOR EXCEPTION TO 9.4.1.2b.

ELECTRICAL ROOMS/ SES ROOM/ ATS ROOM:
MANUAL ON/OFF.
NO OCCUPANCY SENSOR DUE TO SAFETY CONCERNS PER ASHRAE 90.1 EXCEPTION TO 9.4.1.2b.

MECHANICAL ROOM/MECH PLENUM ROOM/PLUMBING/FIRE PUMP ROOM:
MANUAL ON/OFF.
NO OCCUPANCY SENSOR DUE TO SAFETY CONCERNS PER ASHRAE 90.1 EXCEPTION TO 9.4.1.2b.

EXTERIOR LIGHTING CONTROL

ENTRY BOLLARDS:
ROUTE THROUGH ASTRONOMICAL TIME-CLOCK.

NORMAL:
FULL OUTPUT FROM DUSK TO CURFEW.
50% OUTPUT AFTER CURFEW TO DAWN.

OVERRIDE DIMMING SWITCHES LOCATED AT TIME-CLOCK.

EXTERIOR DOOR LIGHTING:
ROUTE THROUGH ASTRONOMICAL TIME-CLOCK.

NORMAL:
FULL OUTPUT FROM DUSK TO CURFEW.
50% OUTPUT AFTER CURFEW TO DAWN.

EMERGENCY:
FULL OUTPUT FROM DUSK TO CURFEW.
FULL OUTPUT AFTER CURFEW TO DAWN.

OVERRIDE DIMMING SWITCHES LOCATED AT TIME-CLOCK.

MONUMENT SIGN:
ROUTE THROUGH ASTRONOMICAL TIME-CLOCK.

OVERRIDE DIMMING SWITCHES LOCATED AT LCP.

NORMAL:
FULL OUTPUT FROM BUSINESS OPENING OR 6AM.
30% OUTPUT AFTER 12 MIDNIGHT PER ASHRAE 90.1 9.4.1.7.c.

POLE LIGHTING:
ROUTE THROUGH ASTRONOMICAL TIME-CLOCK VIA WIRELESS MESH NETWORK.

NORMAL:
FULL OUTPUT FROM DUSK TO CURFEW.
50% OUTPUT AFTER CURFEW TO DAWN.

OVERRIDE DIMMING SWITCHES LOCATED AT TIME-CLOCK.

UTILITY AREA WALL PACKS:
ROUTE THROUGH ASTRONOMICAL TIME-CLOCK.

NORMAL:
INTEGRAL PHOTOCELL.
CONTINUOUS DIMMING INCLUDING ON/OFF.
INTEGRAL OCCUPANCY SENSOR
OCCUPIED: OUTPUT HIGH
UNOCCUPIED: OUTPUT OFF

EMERGENCY:
INTEGRAL PHOTOCELL.
CONTINUOUS DIMMING INCLUDING ON/OFF.
INTEGRAL OCCUPANCY SENSOR
OCCUPIED: OUTPUT HIGH
UNOCCUPIED: OUTPUT AT 20%

OVERRIDE DIMMING SWITCH LOCATED AT TIME-CLOCK.

DEPARTMENT OF HOMELAND SECURITY

MARK	DESCRIPTION	DATE

DESIGNED BY: FRANKLIN
DRAWN BY: FRANKLIN
CHECKED BY: STEGMAN
SUBMITTED BY: HUTZEL
SIZE: ANSI D
ISSUE DATE: MM-DD-YYYY
SOLICITATION NO.: 70CMSW22Q00000001
CONTRACT NO.: 70Z05018KZFNPL08

US IMMIGRATION AND CUSTOMS ENFORCEMENT (ICE)
9455 RIO GRAND DRIVE
ORLANDO, FL 32837

KZF DESIGN
700 ROSSI AVE AT STREET
CINCINNATI, OH 45202

FT. BENNING, GA
MAIN CLASSROOM BUILDING

GENERAL NOTES

SHEET ID
MCB
E-002

JAN 06, 2023 - FINAL SUBMITTAL (35%)

NOT FOR CONSTRUCTION

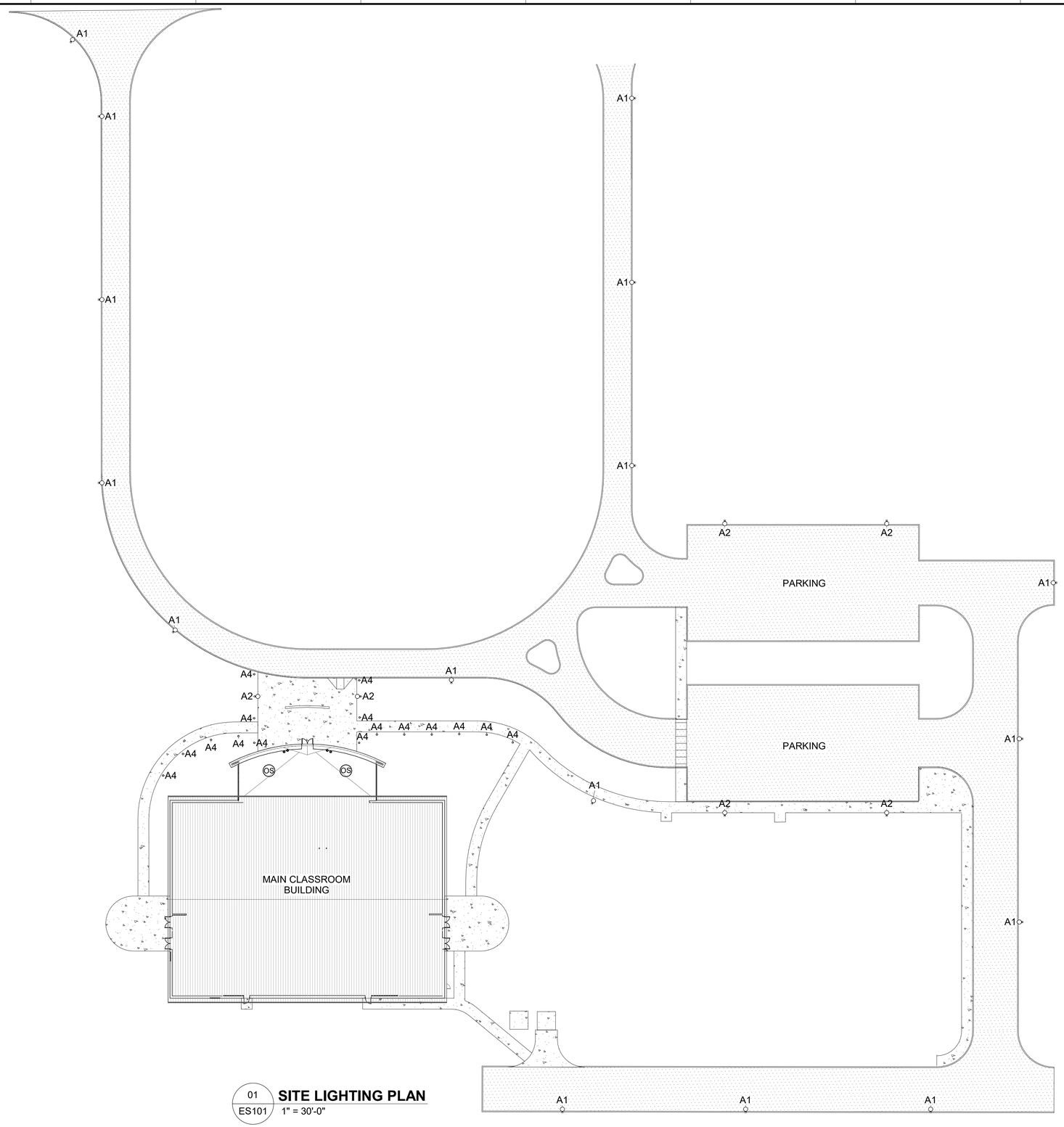

01 ES101 **SITE LIGHTING PLAN**
1" = 30'-0"

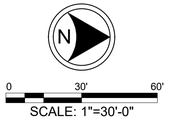

MARK	DESCRIPTION	DATE

DESIGNED BY: FRANKLIN
DRAWN BY: FRANKLIN
CHECKED BY: STEGMAN
SUBMITTED BY: HUTZEL
SIZE: ANSI D
ISSUE DATE: MM-DD-YYYY
SOLICITATION NO.: 70CMSW22Q00000001
CONTRACT NO.: 70Z05018DKZFNPL08

US IMMIGRATION AND CUSTOMS ENFORCEMENT (ICE)
9495 DELEGATED DRIVE
ORLANDO, FL 32837

KZF DESIGN
700 BROADWAY STREET
CINCINNATI, OH 45202

FT. BENNING, GA
MAIN CLASSROOM BUILDING

SITE LIGHTING PLAN

SHEET ID
MCB
ES101

JAN 06, 2023 - FINAL SUBMITTAL (35%)

NOT FOR CONSTRUCTION

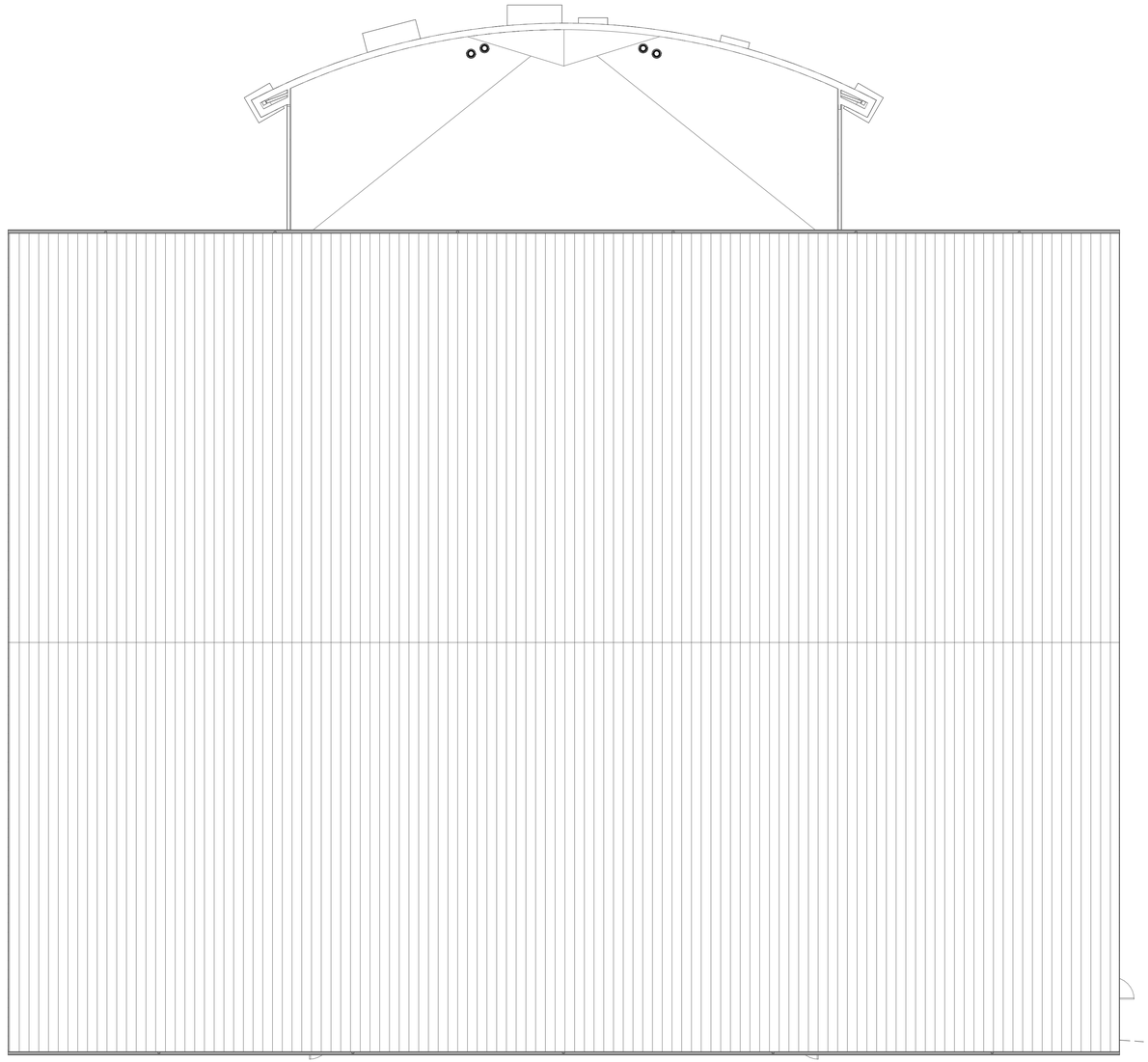

EXISTING OVERHEAD
PRIMARY POWER

EXISTING POWER
POLE

NEW UNDERGROUND
PRIMARY POWER DUCTBANK

P01

P02

P03

DRAWING NOTES

P01 TRANSFORMER GROUND RING

P02 NEW TRANSFORMER AND CONCRETE PAD.

P03 NEW UNDERGROUND SECONDARY DUCTBANK.

01 / ES201 **SITE POWER PLAN**
1" = 10'-0"

N

0 10' 20'
SCALE: 1"=10'-0"

MARK	DESCRIPTION	DATE

DESIGNED BY: FRANKLIN
DRAWN BY: FRANKLIN
CHECKED BY: STEGMAN
SUBMITTED BY: HUTZEL
SIZE: ANSI D

ISSUE DATE: MM-DD-YYYY
SOLICITATION NO.: 70CMSW22Q00000001
CONTRACT NO.: 70Z05018DKZFNPL08

US IMMIGRATION AND CUSTOMS ENFORCEMENT (ICE)
9455 BEE LAKE DRIVE
ORLANDO, FL 32837

KZF DESIGN
700 BROADWAY STREET
CINCINNATI, OH 45202

FT. BENNING, GA
MAIN CLASSROOM BUILDING

SITE POWER PLAN

SHEET ID
MCB
ES201

JAN 06, 2023 - FINAL SUBMITTAL (35%)

NOT FOR CONSTRUCTION

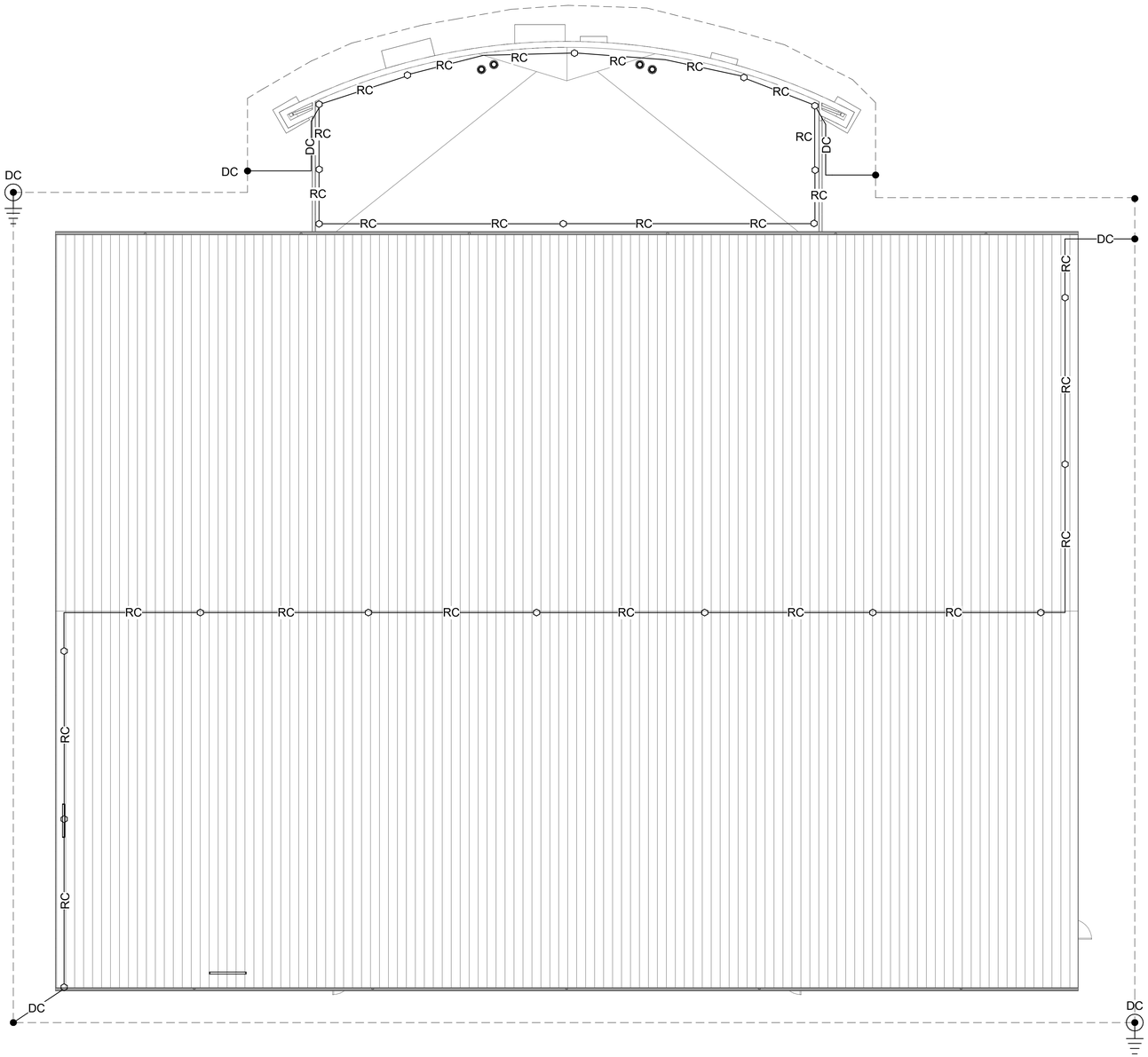

01 ES202 **LIGHTNING PROTECTION PLAN**
1" = 10'-0"

DRAWING NOTES

GENERAL NOTES LIGHTING PROTECTION SYSTEM

A LIGHTNING PROTECTION SYSTEMS MUST BE INSTALLED BY A COMPETENT PERSON(S). THEY MUST HAVE A FULL UNDERSTANDING OF THE LIGHTNING PROTECTIONS STANDARDS: LPI-175, NFPA780 AND UL96A. THESE STANDARDS MUST BE FOLLOWED DURING THE DESIGN, INSTALLATION AND INSPECTION OF A LIGHTNING PROTECTION SYSTEM.

B CONDUCTOR BEND SHALL NOT FORM A SHARPER ANGLE THAN 90 DEGREES OR HAVE A RADIUS LESS THAN 8 INCHES.

C ISOLATED METAL BODIES THAT SHOW NO CONDUCTANCE TO GROUND SHALL NOT REQUIRE BONDING. A GROUNDED METAL BODY WITHIN THE 6 FOOT RULE HAS TO BE BONDED TO THE SYSTEM.

D CONNECTIONS TO GROUND AND/OR COUNTERPOISE MUST BE MADE AT A POINT NOT LESS THAN 1'-0" BELOW GRADE, AND 2'-0" AWAY FROM FOUNDATION WALL.

E AIR TERMINALS SHALL BE PLACED AT THE LOCATIONS INDICATED, NOT MORE THAN 2'-0" FROM THE EDGES OF RIDGES, OUTSIDE CORNERS, OR OUTSIDE EDGES OF MAIN ROOFS AND MUST EXTEND A MINIMUM OF 10" ABOVE OBJECT TO BE PROTECTED.

F MID-ROOF AIR TERMINALS SHALL BE SPACED AT 50'-0" O.C. MAXIMUM SPACING.

G JOB CONDITIONS MAY DICTATE VARIATIONS IN AIR TERMINAL, CONDUCTORS, AND GROUND ROD LOCATIONS.

H CONDUCTORS SHALL MAINTAIN A HORIZONTAL OR DOWNWARD PATH FREE FROM "U" AND "V" POCKETS. ANY RISE IN HORIZONTAL CONDUCTOR SHALL NOT EXCEED 8 INCHES.

I CONDUCTOR MAY RISE UPWARDS AT A RATE OF NO MORE THAN 3" OF RISE PER 1'-0" RUN.

J COPPER LIGHTNING PROTECTION MATERIALS SHALL NOT BE PLACED ON ALUMINUM, GALVANIZED STEEL, GALVALUME SURFACES OR ANY OTHER DISSIMILAR METAL SURFACES. (PAINTED OR NOT) NOR SHALL ALUMINUM MATERIALS BE PLACED ON COPPER SURFACES.

K THE DRAWINGS HAVE NOT CALLED OUT EACH INDIVIDUAL ITEM OF LIGHTNING PROTECTION MATERIALS ON THE ROOF PLAN. THE PLANS SHOWN TYPICAL DETAILS AND CALLED OUT EACH OF THESE DETAILS ON THE ROOF PLAN, ONLY IN SCATTERED LOCATIONS.

L ELECTRIC, TELEPHONE AND ANTENNA SYSTEM GROUNDS SHALL BE CONNECTED WITH MAIN SIZE CONDUCTOR TO ONE LIGHTNING PROTECTION GROUND OR METAL WATER PIPE.

M ALL ADHESIVE FIXTURES SHALL BE SET WITH AN ADHESIVE COMPOUND COMPATIBLE WITH THE ROOFING MATERIAL. ADHESIVES SHALL BE APPROVED IN ADVANCE BY THE ROOFING CONTRACTOR.

N BOND ALL METAL PIPES SUCH AS WATER, GAS, FIRE, STORM, SEWER, ETC., WHICH ENTER THE STRUCTURE TO THE NEAREST DOWN-LEAD, GROUND ROD OR COUNTERPOISE.

O LIGHTNING PROTECTION SYSTEMS SHALL BE INSTALLED IN A NEAT, PROFESSIONAL MANNER.

P WHEN ANCHORING IN MASONRY, HOLES MADE TO RECEIVE THE BODY OF THE ANCHOR SHALL BE MADE IN THE BRICK, STONE, OR OTHER MASONRY UNIT. (RATHER THAN IN MORTAR JOINTS)

N

0 10' 20'
SCALE: 1"=10'-0"

U.S. DEPARTMENT OF HOMELAND SECURITY

MARK	DESCRIPTION	DATE

DESIGNED BY: FRANKLIN
DRAWN BY: FRANKLIN
CHECKED BY: STEGMAN
SUBMITTED BY: HUTZEL
SIZE: ANSI D
ISSUE DATE: MM-DD-YYYY
SOLICITATION NO.: 70CMSW22Q00000001
CONTRACT NO.: 70Z05018DKZFNPL08

US IMMIGRATION AND CUSTOMS ENFORCEMENT (ICE)
9400 EXCELSIOR DRIVE
ORLANDO, FL 32827

KZF DESIGN
700 BROADWAY ST STREET
CINCINNATI, OH 45202

FT. BENNING, GA
MAIN CLASSROOM BUILDING

LIGHTNING PROTECTION PLAN

SHEET ID
MCB
ES202

JAN 06, 2023 - FINAL SUBMITTAL (35%)

NOT FOR CONSTRUCTION

ROOM SCHEDULE	
NAME	NUMBER
BREAKROOM	109
CLASSROOM	118
CLASSROOM	119
CONFERENCE	117
CONTROL/ STORAGE	120
CORRIDOR	108
CORRIDOR	122
COUSELING	101
GEAR LOCKER ROOM	105
GEAR LOCKER ROOM	114
JANITOR	112
LOBBY	100
MECH / ELECT	116
MECHANICAL	121
MECHANICAL	115
MEN	110
OFFICE	102
STORAGE	113
TEAM ROOM	106
TEAM ROOM	107
TEL/COM	123
UNISEX RESTROOM	103
WOMEN	111
WORK ROOM / ADMIN STOR	104

DRAWING NOTES

L01 PROIVDE TIMECLOCK AND OVERRIDE ON/OFF SWITCHING FOR EXTERIOR AND SITE LIGHTING.

10'-0" TO BOTTOM OF FIXTURE

GROUND BAR

01 / E-101 **FIRST FLOOR LIGHTING PLAN**
1/8" = 1'-0"

SCALE: 1/8"=1'-0"

MARK	DESCRIPTION	DATE

ISSUE DATE: MM-DD-YYYY
SOLICITATION NO.: 70CMSW22Q00000001
CONTRACT NO.: 70Z05018KZFNPL08

DESIGNED BY: FRANKLIN
DRAWN BY: FRANKLIN
CHECKED BY: STEGMAN
SUBMITTED BY: HUTZEL
SIZE: ANSI D

US IMMIGRATION AND CUSTOMS ENFORCEMENT (ICE)
9487 DEERFIELD DOWNS DRIVE
ORLANDO, FL 32837

KZF DESIGN
700 BROADWAY ST STREET
CINCINNATI, OH 45202

FT. BENNING, GA
MAIN CLASSROOM BUILDING

FIRST FLOOR LIGHTING PLAN

SHEET ID
MCB
E-101

JAN 06, 2023 - FINAL SUBMITTAL (35%)

NOT FOR CONSTRUCTION

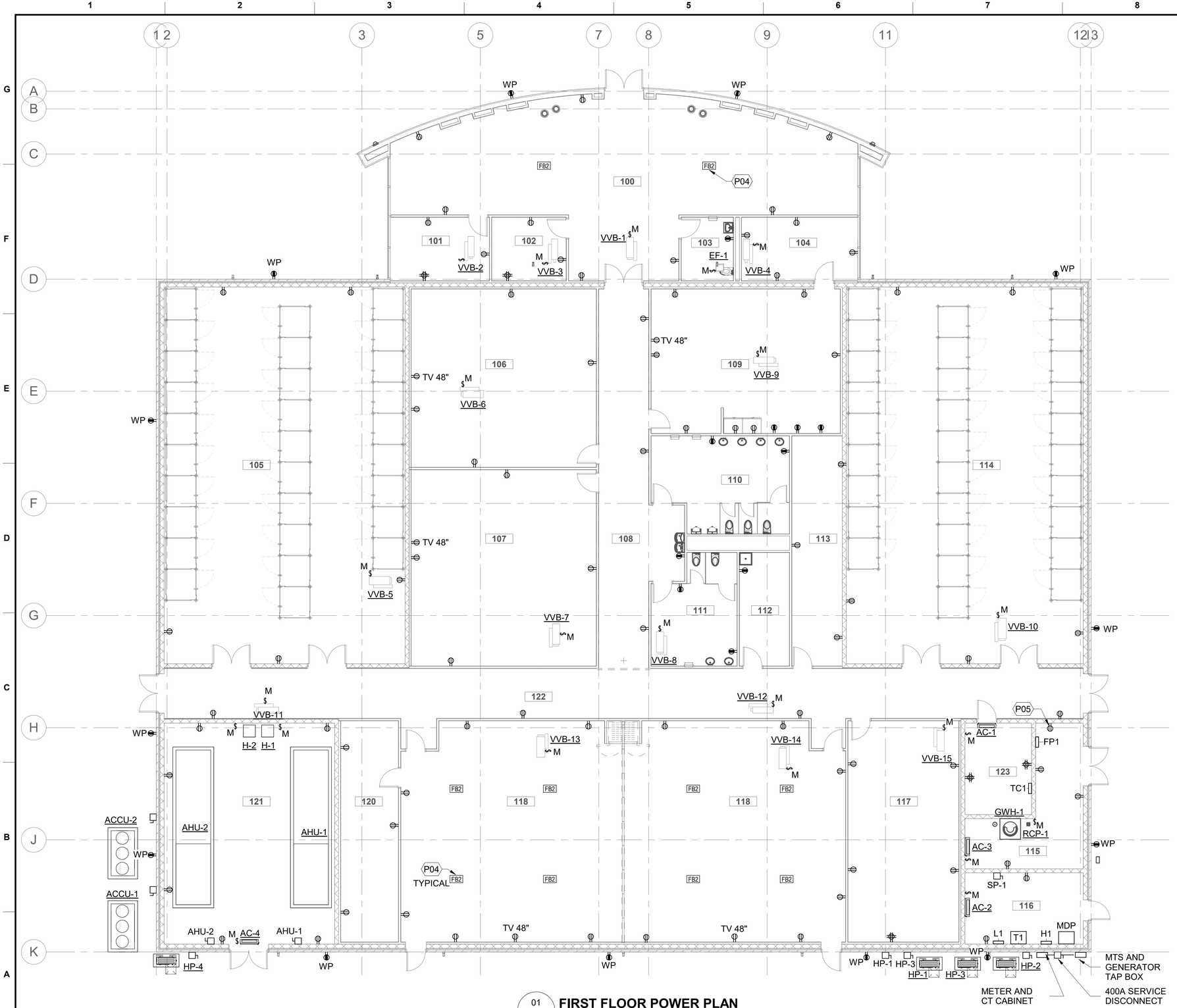

01 E-201 **FIRST FLOOR POWER PLAN**
1/8" = 1'-0"

ROOM SCHEDULE	
NAME	NUMBER
BREAKROOM	109
CLASSROOM	118
CLASSROOM	119
CONFERENCE	117
CONTROL/ STORAGE	120
CORRIDOR	108
CORRIDOR	122
COUSELING	101
GEAR LOCKER ROOM	105
GEAR LOCKER ROOM	114
JANITOR	112
LOBBY	100
MECH / ELECT	116
MECHANICAL	121
MECHANICAL	115
MEN	110
OFFICE	102
STORAGE	113
TEAM ROOM	106
TEAM ROOM	107
TEL/COM	123
UNISEX RESTROOM	103
WOMEN	111
WORK ROOM / ADMIN STOR	104

DRAWING NOTES

P04 CLASSROOM FLOOR BOX TO HAVE (2) DUPLEX RECEPTACLES. INCLUDE DATA CONNECTION PER TELELCOM DRAWINGS.

P05 DEDICATED FIRE ALARM RECEPTACLE.

SCALE: 1/8"=1'-0"

MARK | DESCRIPTION | DATE

ISSUE DATE: MM-DD-YYYY
SOLICITATION NO.: 70CMSW22Q00000001
CONTRACT NO.: 70Z05018DKZFNPL08

DESIGNED BY: FRANKLIN
DRAWN BY: FRANKLIN
CHECKED BY: STEGMAN
SUBMITTED BY: HUTZEL
SIZE: ANSI D

US IMMIGRATION AND CUSTOMS ENFORCEMENT (ICE)
9495 DELEGATED DRIVE
ORLANDO, FL 32837

KZF DESIGN
700 BROADWAY STREET
CINCINNATI, OH 45202

FT. BENNING, GA
MAIN CLASSROOM BUILDING

FIRST FLOOR POWER PLAN

SHEET ID
MCB
E-201

JAN 06, 2023 - FINAL SUBMITTAL (35%)

NOT FOR CONSTRUCTION

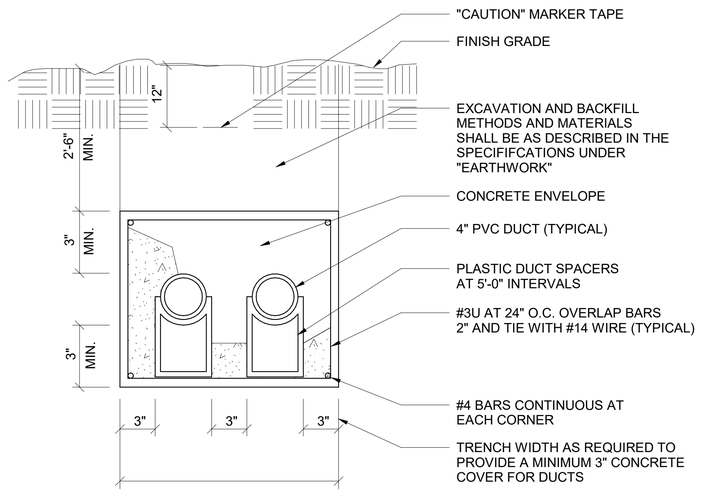

03 / E-501 **2 DUCT BANK**
NTS

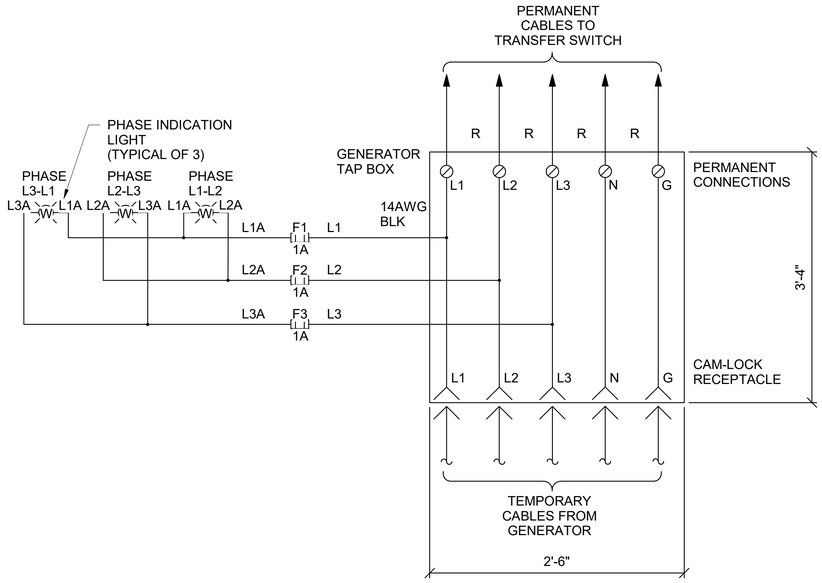

01 / E-501 **GENERATOR TAP BOX**
NTS

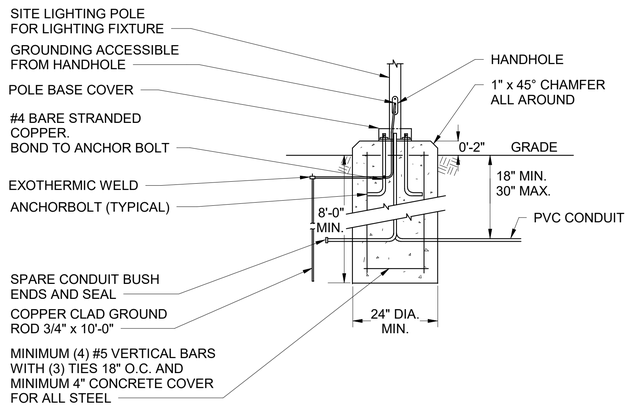

02 / E-501 **GRADE MOUNTED POLE BASE**
NTS

MARK	DESCRIPTION	DATE

DESIGNED BY: FRANKLIN
DRAWN BY: FRANKLIN
CHECKED BY: STEGMAN
SUBMITTED BY: HUTZEL
SIZE: ANSI D
ISSUE DATE: MM-DD-YYYY
SOLICITATION NO.: 70CMSW22Q00000001
CONTRACT NO.: 70Z05018KZFNPL08

US IMMIGRATION AND CUSTOMS ENFORCEMENT (ICE)
9487 DELEGATES DRIVE
ORLANDO, FL 32837

KZF DESIGN
700 BROADWAY ST STREET
CINCINNATI, OH 45202

FT. BENNING, GA
MAIN CLASSROOM BUILDING

DETAILS

SHEET ID
MCB
E-501

JAN 06, 2023 - FINAL SUBMITTAL (35%)

NOT FOR CONSTRUCTION

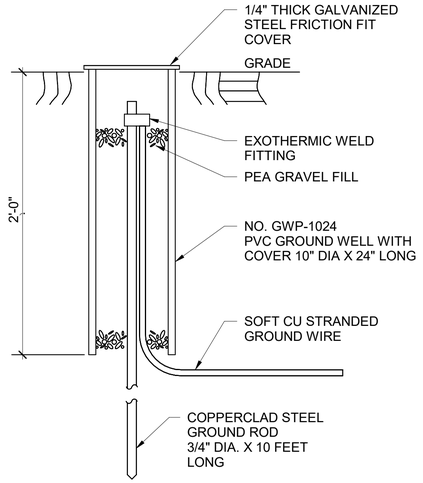

04 E-502 **TESTING WELL**
NTS

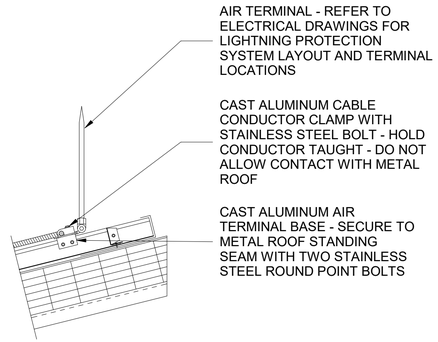

01 E-502 **LIGHTNING PROTECTION - AIR TERMINAL AT RIDGE**
NTS

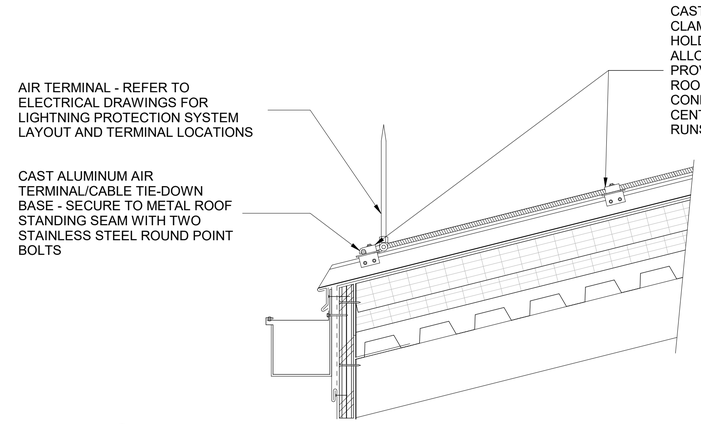

02 E-502 **LIGHTNING PROTECTION AIR TERMINAL AT EAVE -METAL DECK**
NTS

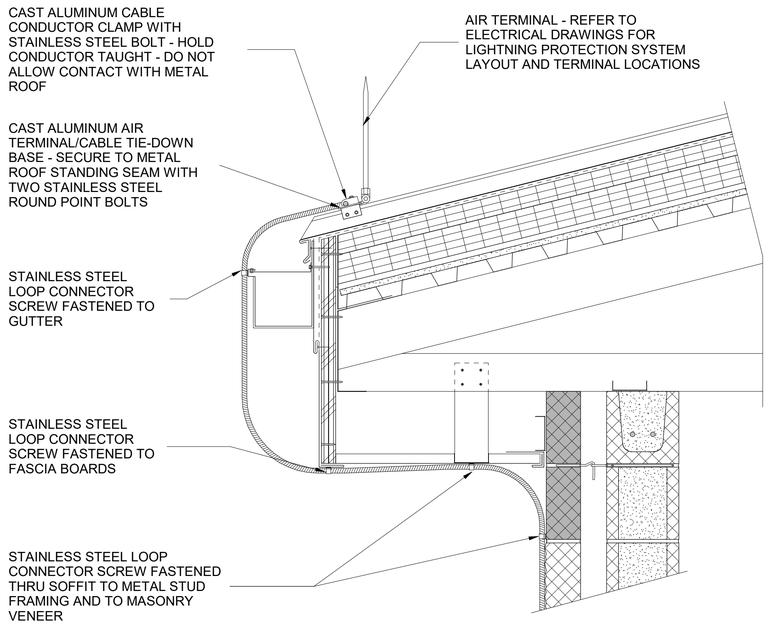

05 E-502 **LIGHTNING PROTECTION - EAVE DETAIL**
NTS

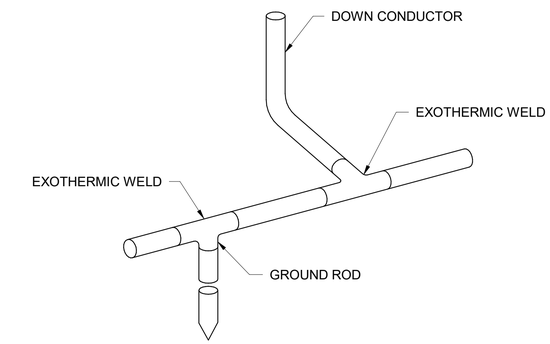

03 E-502 **LIGHTNING PROTECTION SYSTEM GROUND ROD**
NTS

U.S. DEPARTMENT OF HOMELAND SECURITY

MARK	DESCRIPTION	DATE

ISSUE DATE: MM-DD-YYYY
SOLICITATION NO.: 70CMSW22Q00000001
CONTRACT NO.: 70Z05018DKZFNPL08

DESIGNED BY: FRANKLIN
DRAWN BY: FRANKLIN
CHECKED BY: STEGMAN
SUBMITTED BY: HAZEL
SIZE: ANSI D

US IMMIGRATION AND CUSTOMS ENFORCEMENT (ICE)
9455 RESEARCH DRIVE
ORLANDO, FL 32837

KZF DESIGN
700 BROADWAY STREET
CINCINNATI, OH 45202

FT. BENNING, GA
MAIN CLASSROOM BUILDING

DETAILS

SHEET ID
MCB
E-502

JAN 06, 2023 - FINAL SUBMITTAL (35%)

NOT FOR CONSTRUCTION

LUMINAIRE SCHEDULE

MARK	MANUFACTURER	MODEL NUMBER	MOUNTING	LAMP	VOLTAGE	COLOR TEMPERATURE	DESCRIPTION	MARK
A1	LSI INDUSTRIES	MRM LED 12L SIL 3 UNV DIM 40 IMSBT2	POLE	LED	277 V		LED AREA FIXTURE WITH TYPE 3 DISTRIBUTION, HOUSE SIDE SHEILD, INTEGRAL PHOTOCELL MOTION SENSOR. 25' ABOVE GRADE	A1
A2	LSI INDUSTRIES	MRM LED 07L SIL 4 UNV DIM 40 IMSBT2	POLE	LED	277 V		LED AREA FIXTURE WITH TYPE FT DISTRIBUTION, HOUSE SIDE SHEILD, INTEGRAL PHOTOCELL AND MOTION SENSOR. 25' ABOVE GRADE	A2
A4	LSI INDUSTRIES	CBR82L40UNVDBLKSP1	GROUND	LED	277 V		PEDESTRIAN	A4
D1	CURRENT	LBSD- 6RD-CS9-WH-30K	RECESSED	LED	277 V		RECESSED 6" DOWNLIGHT	D1
EX	EXITRONICS	ILX-E-EM-WH	WALL OR CEILING	LED	277 V		RED LETTER, LED EXIT SIGN WITH 90-MINUTE BAKCUP	EX
EX1	EXITRONICS	ILX-E-EM-WH	WALL OR CEILING	LED	277 V		RED LETTER, LED EXIT SIGN WITH 90-MINUTE BAKCUP	EX1
P1	CURRENT	SAE-106-P-LPA-8-SOF-35K-105-4D-D01-1C-UNV-FA1-W3	SUSPENDED	LED	277 V		DIRECT/ INDIRECT PENDANT	P1
P2	CURRENT	SAE-106-P-LPA-8-SOF-35K-105-4D-D01-1C-UNV-FA1-W3	SUSPENDED	LED	277 V		DIRECT/ INDIRECT PENDANT	P2
P3	CURRENT	CLS8-4035	SUSPENDED	LED	277 V		DIRECT/ INDIRECT PENDANT	P3
P4	CURRENT	CLS4-4035	SUSPENDED	LED	277 V		DIRECT/ INDIRECT PENDANT	P4
P6	CURRENT	SAE102-P-ID-STD-4-SOF-CX-35K-I050-D040.ies	SUSPENDED	LED	277 V		DIRECT/ INDIRECT PENDANT	P6
R1	CURRENT	CFP24-55-41-3435	RECESSED	LED	277 V		LED FLAT PANEL	R1
R2	CURRENT	CFP22-40-33-2835	RECESSED	LED	277 V		RECESSED FLAT PANEL, SELECTABLE	R2
R4	CURRENT	70LGRIDD0408C235KD0301CUNVEG	GRID	LED	277 V		RECESSEC LINEAR LED	R4
W1	LSI INDUSTRIES	XWM-FT-LED-03L-40	WALL MOUNT	LED	277 V		WALL MOUNTED EXTERIOR LED WITH INTEGRAL PHOTOCELL CONTROL	W1
W2	LSI INDUSTRIES	XWM3-LED-03L-40	WALL MOUNT	LED	277 V		WALL MOUNTED EXTERIOR LED WITH INTEGRAL PHOTOCELL CONTROL	W2

CONTRACTORS ARE FREE TO USE ANY PRODUCT WHICH MEETS THE GOVERNMENT'S MINIMUM REQUIREMENTS AND NOT IN CONFLICT WITH OTHER CONTRACT PROVISIONS. UNLESS INDICATED OTHERWISE ON THE PLANS OR SPECIFICATIONS (E.G. SOLE-SOURCE), ALL LISTED MANUFACTURERS ARE THE BASIS OF DESIGN. FOR THESE BASIS OF DESIGN PRODUCTS, OTHER MANUFACTURERS MAY BE SUBSTITUTED AS LONG AS THE STANDARD OF QUALITY AND CHARACTERISTICS OF THE SUBSTITUTED MANUFACTURER MEET OR EXCEED THE STANDARD OF QUALITY AND CHARACTERISTICS OF THE BASIS OF DESIGN.

EQUIPMENT COORDINATION SCHEDULE

MARK	DESCRIPTION/ LOCATION	LOAD CHARACTERISTICS			DISC. - TYPE	DISC. - SW./FUSE SIZE	MARK
		VOLT	PHASE	MCA			
AC-1	RM123	208 V	3	1	NF	15	AC-1
AC-2	RM116	208 V	3	1	NF	15	AC-2
AC-3	RM115	480 V	3	1	NF	15	AC-3
AC-4	RM121	208 V	3	1	NF	15	AC-4
ACCU-1	BUILDING EXTERIOR	480 V	3	37.38	NF	60	ACCU-1
ACCU-2	BUILDING EXTERIOR	480 V	3	37.38	NF	30	ACCU-2
AHU-1	RM121	480 V	3	20.7	NF	30	AHU-1
AHU-2	RM121	480 V	3	20.7	NF	30	AHU-2
EF-1	RR 103	208 V	3	.5	M	15	EF-1
H-1	RM121	120 V	1	2.0	M	15	H-1
H-1	RM121	120 V	1	2.0	M	15	H-1
HP-1	BUILDING EXTERIOR	208 V	1	17	NF	30	HP-1
HP-2	BUILDING EXTERIOR	208 V	1	17	NF	30	HP-2
HP-3	BUILDING EXTERIOR	208 V	1	17	NF	30	HP-3
HP-4	BUILDING EXTERIOR	208 V	1	17	NF	30	HP-4
RCP-1	RM115	208 V	1	1.79	M	15	RCP-1
SP-1	UNDERGROUND ENTRANCE	480 V	3	.90	NF	15	SP-1
VVB-1	RM100	480 V	3	7.52	M	15	VVB-1
VVB-2	RM101	208 V	1	9.01	M	15	VVB-2
VVB-3	RM102	208 V	1	6.01	M	15	VVB-3
VVB-4	RM104	208 V	1	6.01	M	15	VVB-4
VVB-5	RM105	480 V	3	9.77	M	15	VVB-5
VVB-6	RM106	480 V	3	6.77	M	15	VVB-6
VVB-7	RM107	480 V	3	6.77	M	15	VVB-7
VVB-8	RM111	480 V	3	6.77	M	15	VVB-8
VVB-9	RM109	480 V	3	3.76	M	15	VVB-9
VVB-10	RM114	208 V	3	9.02	M	15	VVB-10
VVB-11	CORRIDOR CEILING	480 V	3	5.26	M	15	VVB-11
VVB-12	CORRIDOR CEILING	480 V	3	5.26	M	15	VVB-12
VVB-13	RM118	480 V	3	15.04	M	15	VVB-13
VVB-14	RM118	480 V	3	14.28	M	15	VVB-14
VVB-15	RM117	480 V	3	6.01	M	15	VVB-15

EQUIPMENT COORDINATION SCHEDULE ABBREVIATIONS AND NOTES

BI BUILT-IN
CC CONTROL CONTRACTOR
COMB COMBINATION STARTER WITH DISCONNECT
DDC DIRECT DIGITAL CONTROL SYSTEM BY HC.
EC ELECTRICAL CONTRACTOR
EL RM ELECTRICAL ROOM
EXP EXPLOSION PROOF
F FUSED
FB FURNISHED BY
HC HVAC CONTRACTOR
HIP HUMAN INTERFACE PANEL
IB INSTALLED BY
M MOTOR RATED TOGGLE SWITCH
MAN MANUAL
M RM MECHANICAL ROOM
NF NON-FUSED
NU NEAR UNIT
OIP OPERATOR INTERFACE PANEL
PACK PACKED ITEM
SFP SEE FLOOR PLAN
S/S/SS/PL STOP/START/HOA SELECTOR SWITCH WITH RED START AND GREEN STOP LIGHTS
T/PL TOGGLE SWITCH WITH PILOT LIGHT
VFD VARIABLE FREQUENCY DRIVE
WP WEATHER PROOF

MARK	DESCRIPTION	DATE

DESIGNED BY: FRANKLIN
DRAWN BY: FRANKLIN
CHECKED BY: STEGMAN
SUBMITTED BY: HUTZEL
SIZE: ANSI D
ISSUE DATE: MM-DD-YYYY
SOLICITATION NO.: 70CMSW22Q00000001
CONTRACT NO.: 70Z05018KZFNPL08

US IMMIGRATION AND CUSTOMS ENFORCEMENT (ICE)
9401 CITRUS GLEN DRIVE
ORLANDO, FL 32837

KZF DESIGN
700 BROADWAY STREET
CINCINNATI, OH 45202

FT. BENNING, GA
MAIN CLASSROOM BUILDING

SCHEDULES

SHEET ID
MCB
E-601

JAN 06, 2023 - FINAL SUBMITTAL (35%)

NOT FOR CONSTRUCTION

Branch Panel: TC1

Location: RM 123
Supply From: L1
Mounting: SURFACE
Enclosure: TYPE 1

Volts: 120/208 Wye
Phases: 3
Wires: 4

A.I.C. Rating:
Mains Type: MLO
Mains Rating: 100 A
Rating: 100 A

Notes:

CKT	Circuit Description	Trip	Poles	A	B	C	Poles	Trip	Circuit Description	CKT
1										2
3										4
5										6
7										8
9										10
11										12
13										14
15										16
17										18
19										20
21										22
23										24
25										26
27										28
29										30
		Total Load:		0 VA	0 VA	0 VA				
		Total Amps:		0 A	0 A	0 A				

Legend:

Load Classification	Connected Load	Demand Factor	Estimated Demand	Panel Totals	
				Total Conn. Load:	0 VA
				Total Est. Demand:	0 VA
				Total Conn.:	0 A
				Total Est. Demand:	0 A

Notes:

Branch Panel: L1

Location: RM 116
Supply From: T1
Mounting: SURFACE
Enclosure: TYPE 1

Volts: 120/208 Wye
Phases: 3
Wires: 4

A.I.C. Rating:
Mains Type: MCB
Mains Rating: 225 A
MCB Rating: 225A

Notes:

CKT	Circuit Description	Trip	Poles	A	B	C	Poles	Trip	Circuit Description	CKT
1				0 VA	0 VA					2
3	FP1	80 A	3		0 VA	0 VA	3	80 A	TC1	4
5						0 VA	0 VA			6
7	HP-1	30 A	2	1768...	1768...		2	30 A	HP-3	8
9					1768...	1768...				10
11	HP-2	30 A	2			1768...	2	20 A	HP-4	12
13				1768...	1768...					14
15										16
17										18
19										20
21										22
23										24
25										26
27										28
29										30
31										32
33										34
35										36
37										38
39										40
41										42
		Total Load:		7072 VA	3536 VA	3536 VA				
		Total Amps:		59 A	29 A	29 A				

Legend:

Load Classification	Connected Load	Demand Factor	Estimated Demand	Panel Totals	
Equipment	14144 VA	100.00%	14144 VA		
				Total Conn. Load:	14144 VA
				Total Est. Demand:	14144 VA
				Total Conn.:	39 A
				Total Est. Demand:	39 A

Notes:

Branch Panel: FP1

Location: RM 115
Supply From: L1
Mounting: SURFACE
Enclosure: TYPE 1

Volts: 120/208 Wye
Phases: 3
Wires: 4

A.I.C. Rating:
Mains Type: MLO
Mains Rating: 100 A
Rating: 100 A

Notes:

CKT	Circuit Description	Trip	Poles	A	B	C	Poles	Trip	Circuit Description	CKT
1										2
3										4
5										6
7										8
9										10
11										12
13										14
15										16
17										18
19										20
21										22
23										24
25										26
27										28
29										30
		Total Load:		0 VA	0 VA	0 VA				
		Total Amps:		0 A	0 A	0 A				

Legend:

Load Classification	Connected Load	Demand Factor	Estimated Demand	Panel Totals	
				Total Conn. Load:	0 VA
				Total Est. Demand:	0 VA
				Total Conn.:	0 A
				Total Est. Demand:	0 A

Notes:

Branch Panel: H1

Location: RM 116
Supply From: MDP
Mounting: SURFACE
Enclosure: TYPE 1

Volts: 480/277 Wye
Phases: 3
Wires: 4

A.I.C. Rating:
Mains Type: MLO
Mains Rating: 225 A
MCB Rating:

Notes:

CKT	Circuit Description	Trip	Poles	A	B	C	Poles	Trip	Circuit Description	CKT
1										2
3										4
5										6
7										8
9										10
11										12
13										14
15										16
17										18
19										20
21										22
23										24
25										26
27										28
29										30
		Total Load:		0 VA	0 VA	0 VA				
		Total Amps:		0 A	0 A	0 A				

Legend:

Load Classification	Connected Load	Demand Factor	Estimated Demand	Panel Totals	
				Total Conn. Load:	0 VA
				Total Est. Demand:	0 VA
				Total Conn.:	0 A
				Total Est. Demand:	0 A

Notes:

MARK	DESCRIPTION	DATE

DESIGNED BY: FRANKLIN
DRAWN BY: FRANKLIN
CHECKED BY: STEGMAN
SUBMITTED BY: HUTZEL
SIZE: ANSI D
ISSUE DATE: MM-DD-YYYY
SOLICITATION NO.: 70CMSW22Q00000001
CONTRACT NO.: 70Z05018KZFNPL08

US IMMIGRATION AND CUSTOMS ENFORCEMENT (ICE)
9456 BEE LINE HIGHWAY
ORLANDO, FL 32837

KZF DESIGN
700 BROADWAY STREET
CINCINNATI, OH 45202

FT. BENNING, GA
MAIN CLASSROOM BUILDING

SCHEDULES

SHEET ID
MCB
E-602

JAN 06, 2023 - FINAL SUBMITTAL (35%)

NOT FOR CONSTRUCTION

Switchboard: MDP

Location: RM 116
Supply From:
Mounting: SURFACE
Enclosure: TYPE 1

Volts: 480/277 Wye
Phases: 3
Wires: 4

A.I.C. Rating:
Mains Type: MCB
Mains Rating: 400 A
MCB Rating: 400A

Notes:

CKT	Circuit Description	# of Poles	Frame Size	Trip Rating	Load	Remarks
1	L1	3	225 A	225 A	0 VA	
2	T1	3	100 A	100 A	14144 VA	
3	ACCU-1	3	40 A	40 A	22841 VA	
4	ACCU-2	3	40 A	40 A	22841 VA	
5	AHU-2	3	20 A	20 A	17209 VA	
6	AHU-1	3	20 A	20 A	17209 VA	
7						
8						
9						
10						
11						
12						
13						
14						
15						
16						
17						
18						
19						
20						
				Total Conn. Load:	94245 VA	
				Total Amps:	113 A	

Legend:

Load Classification	Connected Load	Demand Factor	Estimated Demand	Panel Totals	
Equipment	94245 VA	100.00%	94245 VA		
				Total Conn. Load:	94245 VA
				Total Est. Demand:	94245 VA
				Total Conn.:	113 A
				Total Est. Demand:	113 A

Notes:

FEEDER SCHEDULE					
FEEDER ID TAG	NUMBER OF SETS	CONDUCTORS			CONDUIT SIZE
		PHASE	NEUTRAL	GROUND	
40-3 CU		3-#8 AWG CU		1-#10 AWG CU	3/4"
100-3 CU		3-#1 AWG CU		1-#8 AWG CU	1-1/4"
100-4 CU		3-#1 AWG CU	1-#1 AWG CU	1-#8 AWG CU	1-1/2"
225-4 CU		3-#4/0 AWG CU	1-#4/0 AWG CU	1-#6 AWG CU	2"
400-4 CU	2	3-#3/0 AWG CU	1-#3/0 AWG CU	1-#3 AWG CU	2"

ALLOWABLE AMPACITIES OF INSULATED CONDUCTORS ARE BASED ON AMBIENT TEMPERATURE OF 86 DEGREES FAHRENHEIT.

PER UFC 3-520-01, CIRCUIT CONDUCTORS MUST BE SIZED BASED ON 60 DEGREES CELCIUS AMPACITY FOR CIRCUITS RATED 100 AMPERES OR LESS AND 75 DEGREES CELCIUS AMPACITY FOR CIRCUITS RATED OVER 100 AMPERES. HIGHER TEMPERATURE AMPACITY RATINGS FOR CONDUCTORS MAY ONLY BE USED FOR AMPACITY ADJUSTMENT OR CORRECTION AS PERMITTED BY NFPA 70.1.

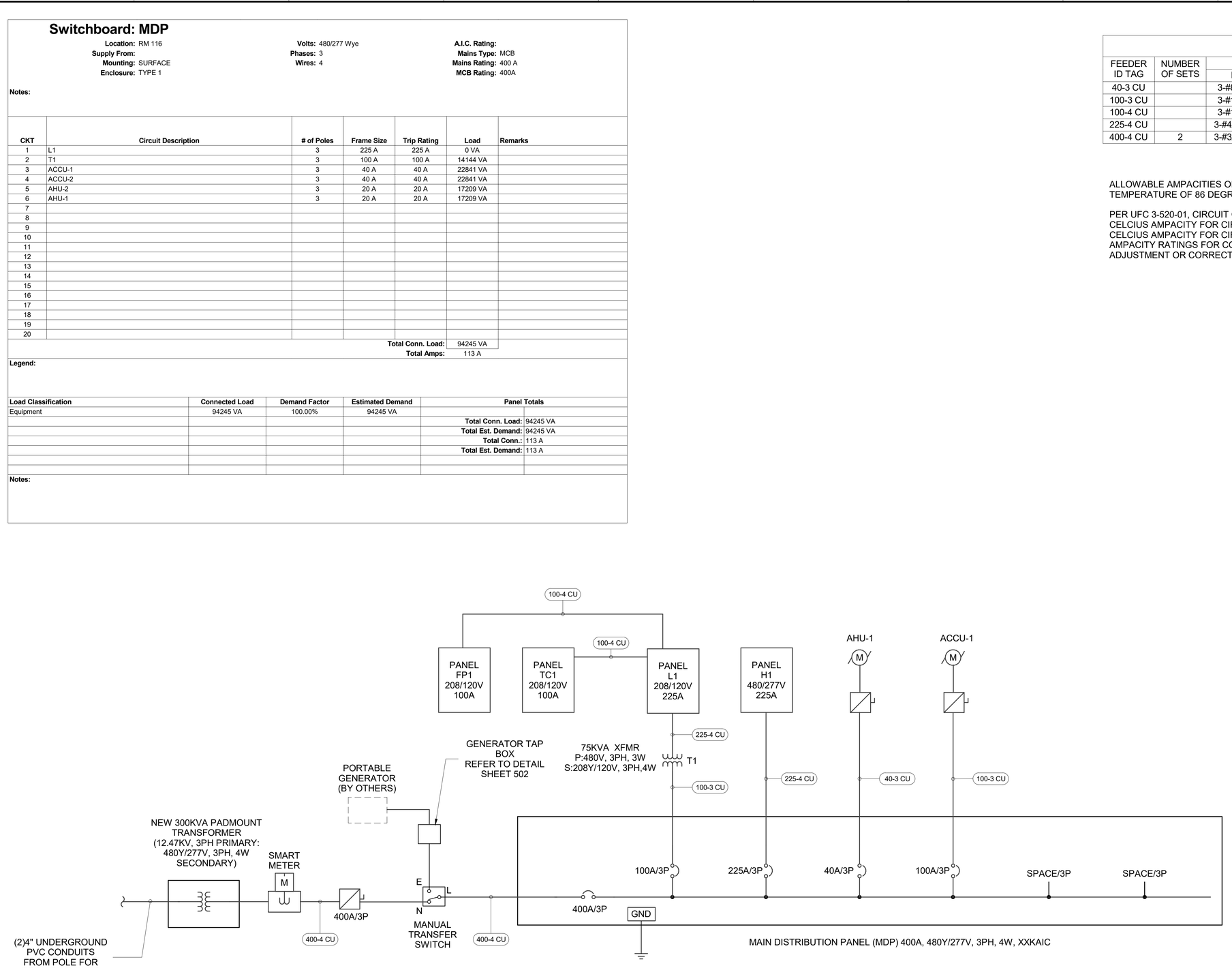

01 / E-801 **POWER SINGLE LINE DIAGRAM**
NTS

MARK	DESCRIPTION	DATE

DESIGNED BY: FRANKLIN
DRAWN BY: FRANKLIN
CHECKED BY: STEGMAN
SUBMITTED BY: HUTZEL
SIZE: ANSI D
ISSUE DATE: MM-DD-YYYY
SOLICITATION NO.: 70CMSW22Q00000001
CONTRACT NO.: 70Z05018DKZFNPL08

US IMMIGRATION AND CUSTOMS ENFORCEMENT (ICE)
9401 BOGGY CREEK DRIVE
ORLANDO, FL 32827

KZF DESIGN
700 BROADWAY ST STREET
CINCINNATI, OH 45202

FT. BENNING, GA
MAIN CLASSROOM BUILDING

POWER SINGLE LINE DIAGRAM

SHEET ID
MCB
E-801

JAN 06, 2023 - FINAL SUBMITTAL (35%)

NOT FOR CONSTRUCTION

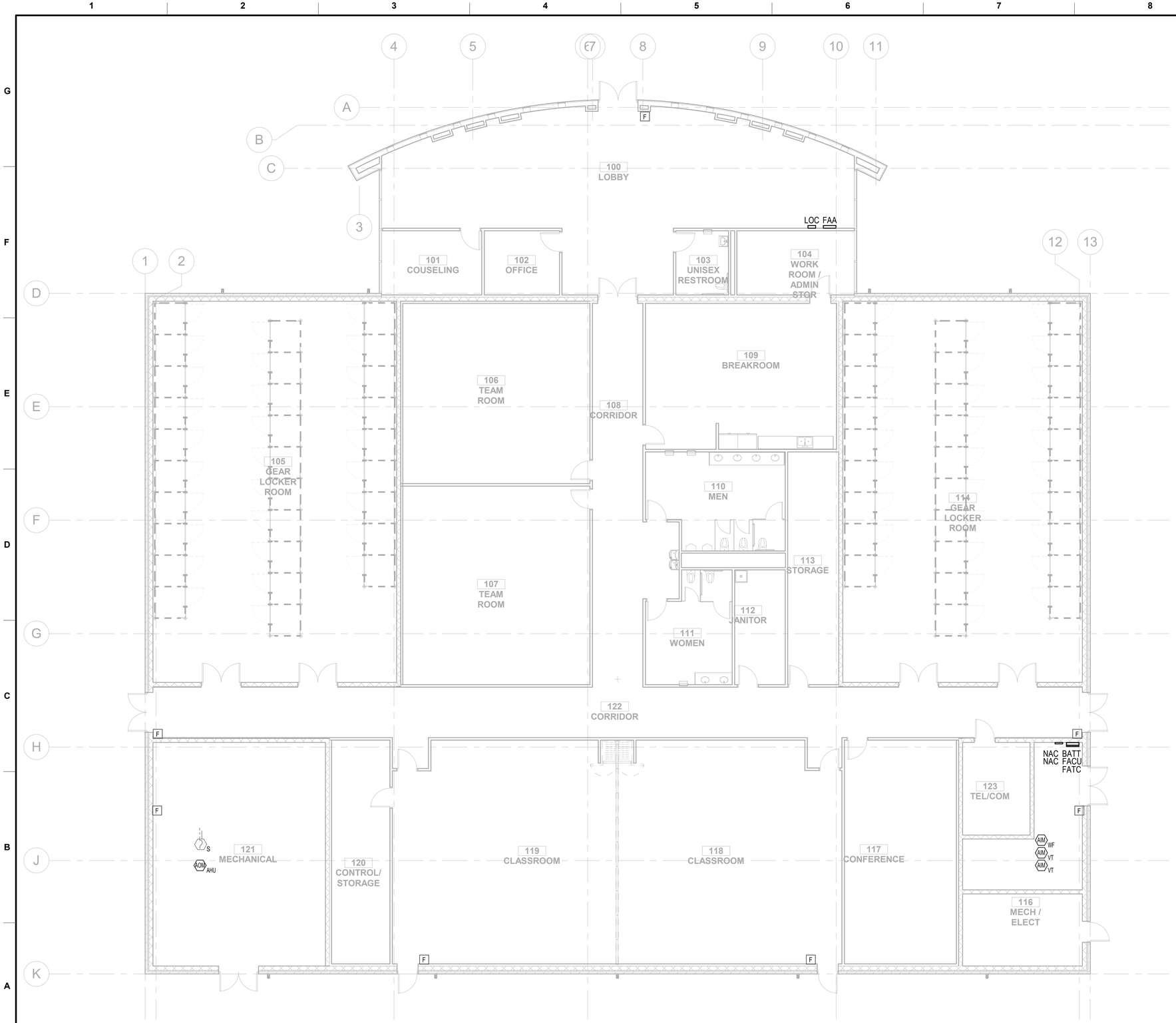

	FIRE ALARM LEGEND
FACU	FIRE ALARM CONTROL UNIT
FATC	FIRE ALARM TERMINAL CABINET
NAC	NOTIFICATION APPLIANCE CONTROL PANEL
BATT	BATTERY
FAA	FIRE ALARM ANNOUNCIATOR

NOTES:

1. PROVIDE NEW COMBINED FIRE ALARM AND MASS NOTIFICATION SYSTEM.
2. PROVIDE MONITORING FOR FLOW AND TAMPER SWITCHES FOR SPRINKLER FLOOR CONTROL VALVE ASSEMBLIES.
3. HOLD* (WAITING ON BASE WIDE REPORTING SYSTEM INFORMATION)

FULL AUDIO VISUAL SHALL BE PROVIDED ACCORDING TO NFPA 72

01 / FA101 **FIRE ALARM FIRST FLOOR PLAN**
1/8" = 1'-0"

N

0 4' 8' 16'
SCALE: 1/8" = 1'-0"

NOT FOR CONSTRUCTION

U.S. DEPARTMENT OF HOMELAND SECURITY

MARK	DESCRIPTION	DATE

DESIGNED BY: K Lawrence
DRAWN BY: A Lockwood
CHECKED BY: E Babcock
SUBMITTED BY: HUTZEL
SIZE: ANSI D

ISSUE DATE: JAN 06,2023
SOLICITATION NO.: 70CMSW22Q00000001
CONTRACT NO.: 70Z05018DKZFNPL08

US IMMIGRATION AND CUSTOMS ENFORCEMENT (ICE)
9485 DELEGATE DRIVE
ORLANDO, FL 32837

KZF DESIGN
700 BROADWAY STREET
CINCINNATI, OH 45202

FT BENNING, GEORGIA
IMMIGRATION & CUSTOM'S ENFORCEMENT (ICE)

FIRE ALARM FIRST FLOOR PLAN

SHEET ID
MCB
FA101

JAN 06, 2023 - FINAL SUBMITTAL (35%)