APPENDIX F
ICE DRAWING STANDARDS

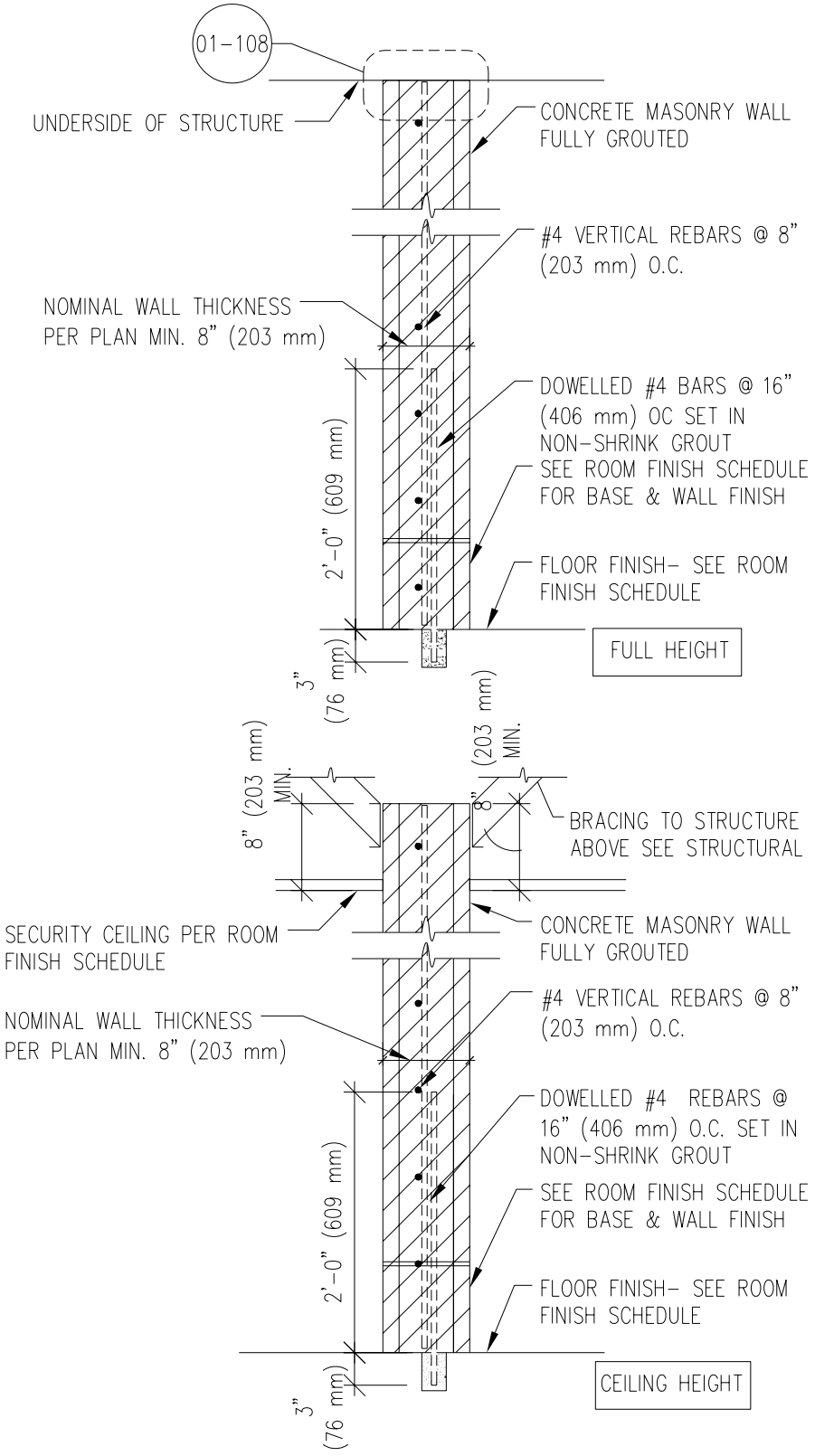

"HIGH" SECURITY WALL TYPE

DETENTION CONSTRUCTION STANDARDS **SERVICE PROCESSING CENTER**

U.S. Immigration and Customs Enforcement

REF NUMBER:	TITLE:	NUMBER
DATE: 08 OCTOBER 2004	"HIGH" SECURITY WALL TYPE	01-101
SCALE: 3/4" = 1'-0"		File: 01-101.dwg

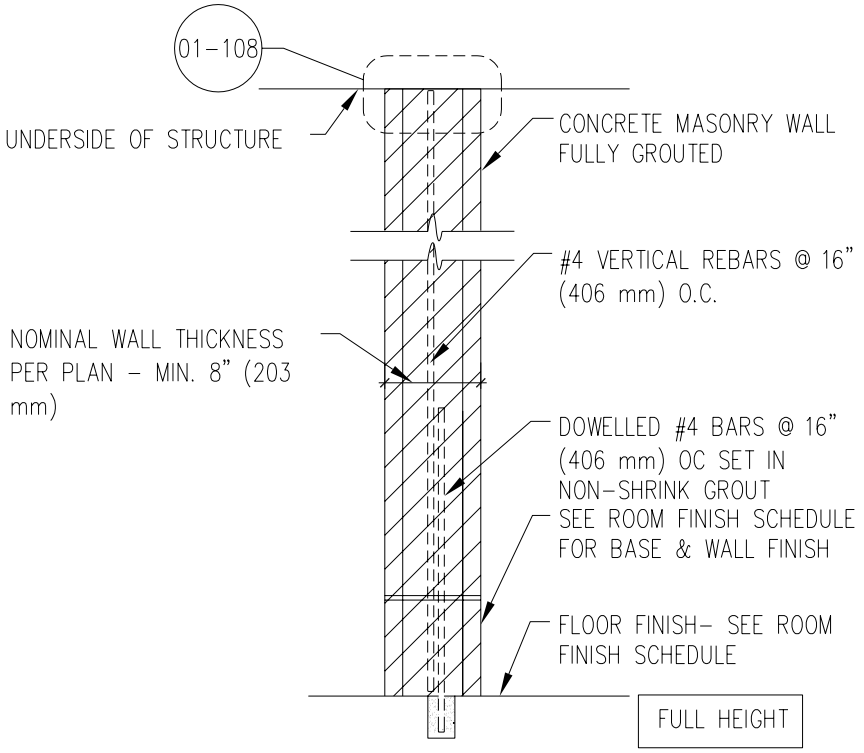

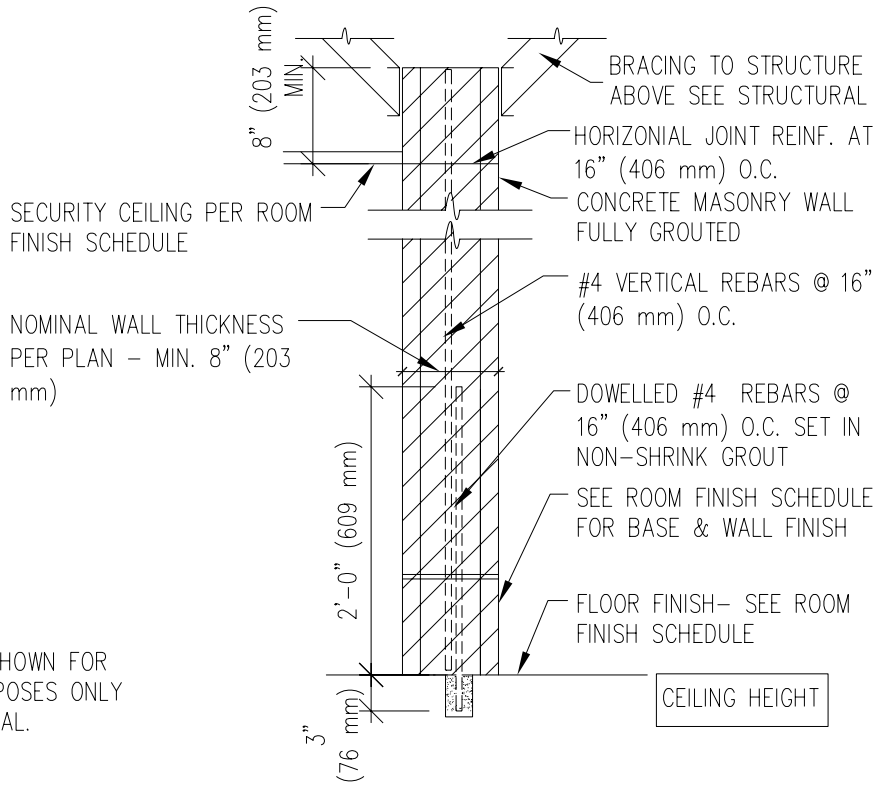

REINFORCING SHOWN FOR SECURITY PURPOSES ONLY NOT STRUCTURAL.

"MEDIUM" SECURITY WALL TYPE

DETENTION CONSTRUCTION STANDARDS		SERVICE PROCESSING CENTER	
U.S. Immigration and Customs Enforcement	**REF NUMBER:**	**TITLE:** "MEDIUM" SECURITY WALL TYPE	**NUMBER** 01-102
	DATE: 08 OCTOBER 2004		File: 01-102.dwg
	SCALE: 3/4" = 1'-0"		

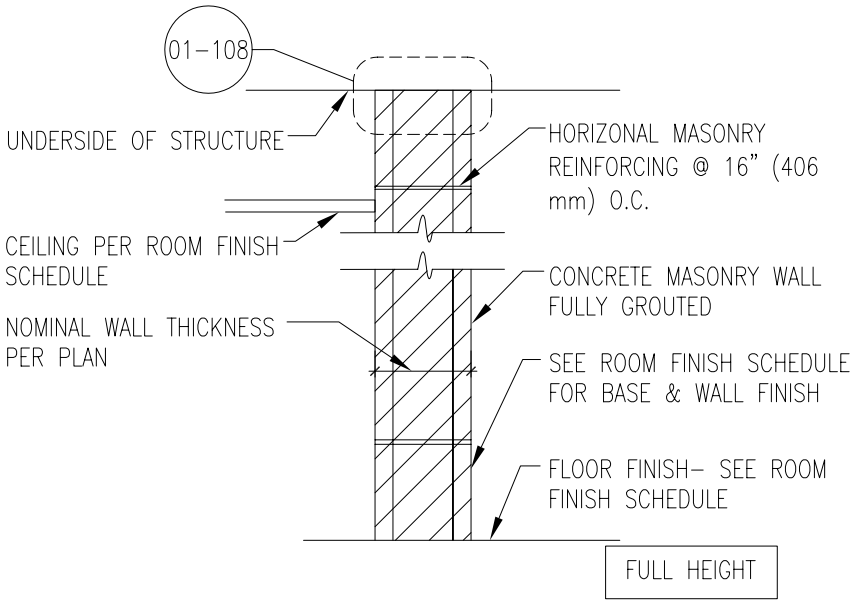

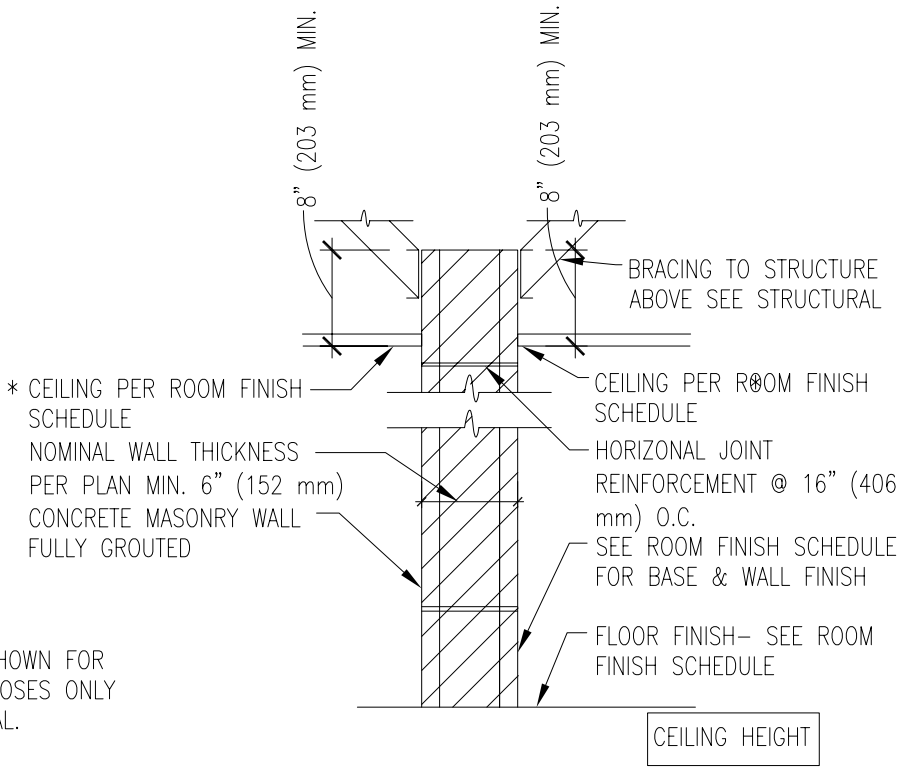

REINFORCING SHOWN FOR SECURITY PURPOSES ONLY NOT STRUCTURAL.

* PENETRATION RESISTANT CEILING

"LOW" SECURITY WALL TYPE

DETENTION CONSTRUCTION STANDARDS			SERVICE PROCESSING CENTER
U.S. Immigration and Customs Enforcement	**REF NUMBER:**	**TITLE:** "LOW" SECURITY WALL TYPE	**NUMBER** 01-103
	DATE: 08 OCTOBER 2004		
	SCALE: 3/4" = 1'-0"		File: 01-103.dwg

SECURITY WALL TYPE ADJACENCIES

	DAYROOM	CORRIDOR	CELL	MULTI-PURPOSE	JANITOR	UTILITY	STORAGE	EXTERIOR	SHOWER
DAYROOM									
CORRIDOR	M								
CELL	M	M							
MULTI-PURPOSE	L	L	M						
JANITOR	L	L	M	L					
UTILITY	*	L	M	*	M				
STORAGE	L	M	M	L	L	*			
EXTERIOR	H	H	H	H	H	H	L		
SHOWER	L	*	M	L	L	*	L	H	

* = REVIEW SPECIFIC LOCATION.

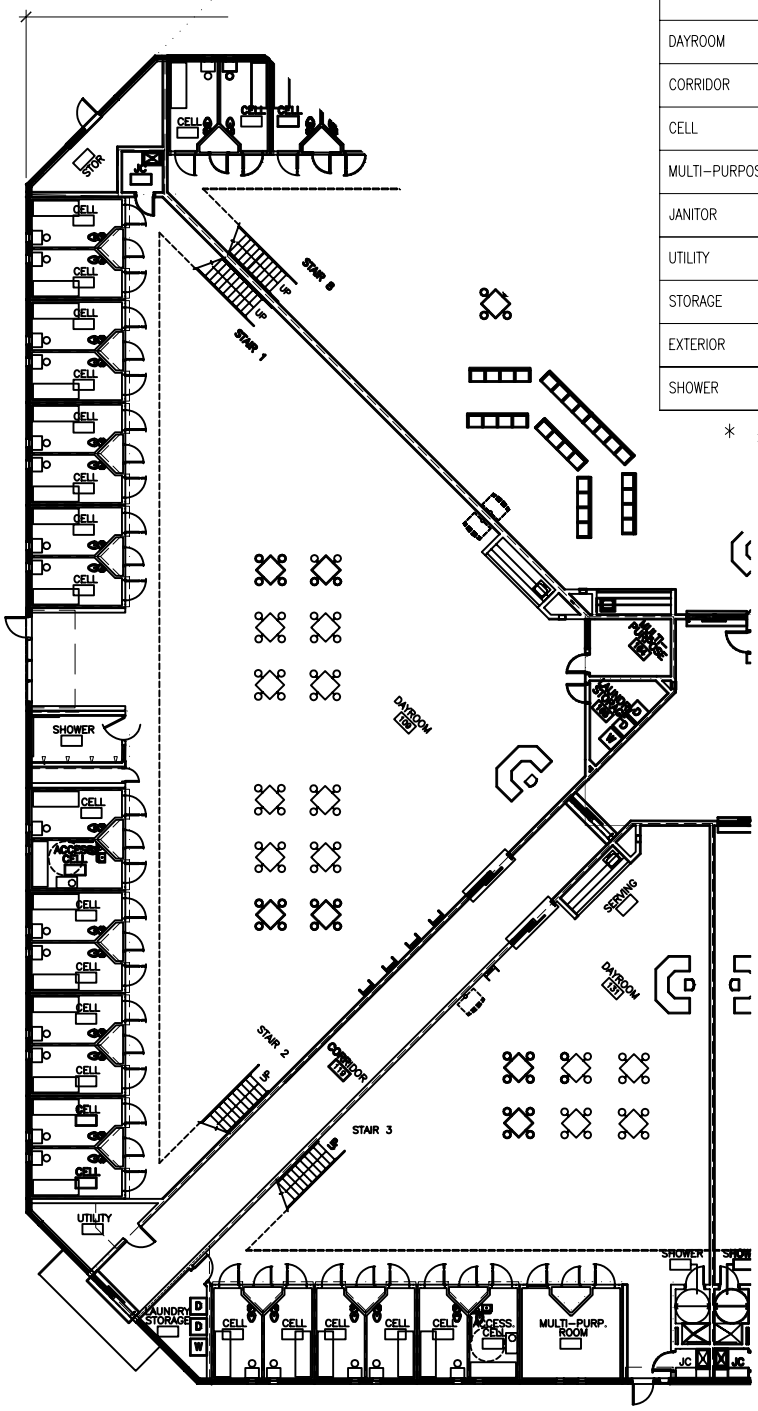

SECURITY WALL TYPE

- H: HIGH
- M: MEDIUM
- L: LOW

PLAN DIAGRAM SHOWS REPRESENTATIVE APPLICATIONS OF SECURITY WALLS IN A TYPICAL HOUSING UNIT.

DETENTION CONSTRUCTION STANDARDS **SERVICE PROCESSING CENTER**

U.S. Immigration and Customs Enforcement

REF NUMBER:

DATE: 08 OCTOBER 2004

SCALE: NOT TO SCALE

TITLE: TYPICAL SECURITY WALL TYPES AT HOUSING - 1ST FLOOR

NUMBER **01-104**

File: 01-104.dwg

SECURITY WALL TYPE ADJACENCIES

	DAYROOM	CORRIDOR	CELL	SHOWER	PROP STOR/JANITOR	CONTROL	TELECOM	ELEC RM	WATER HTR RM	EXTERIOR
DAYROOM										
CORRIDOR	M									
CELL	M	M								
SHOWER	L	*	M							
PROP STOR/JANITOR	L	L	M	L						
CONTROL	H	H	*	*	*					
TELECOM	L	L	L	L	L	H				
ELEC RM	M	*	*	*	*	H	L			
WATER HTR RM	M	*	*	*	*	H	L	L		
EXTERIOR	H	H	H	H	*	H	*	*	*	

* = REVIEW SPECIFIC LOCATION.

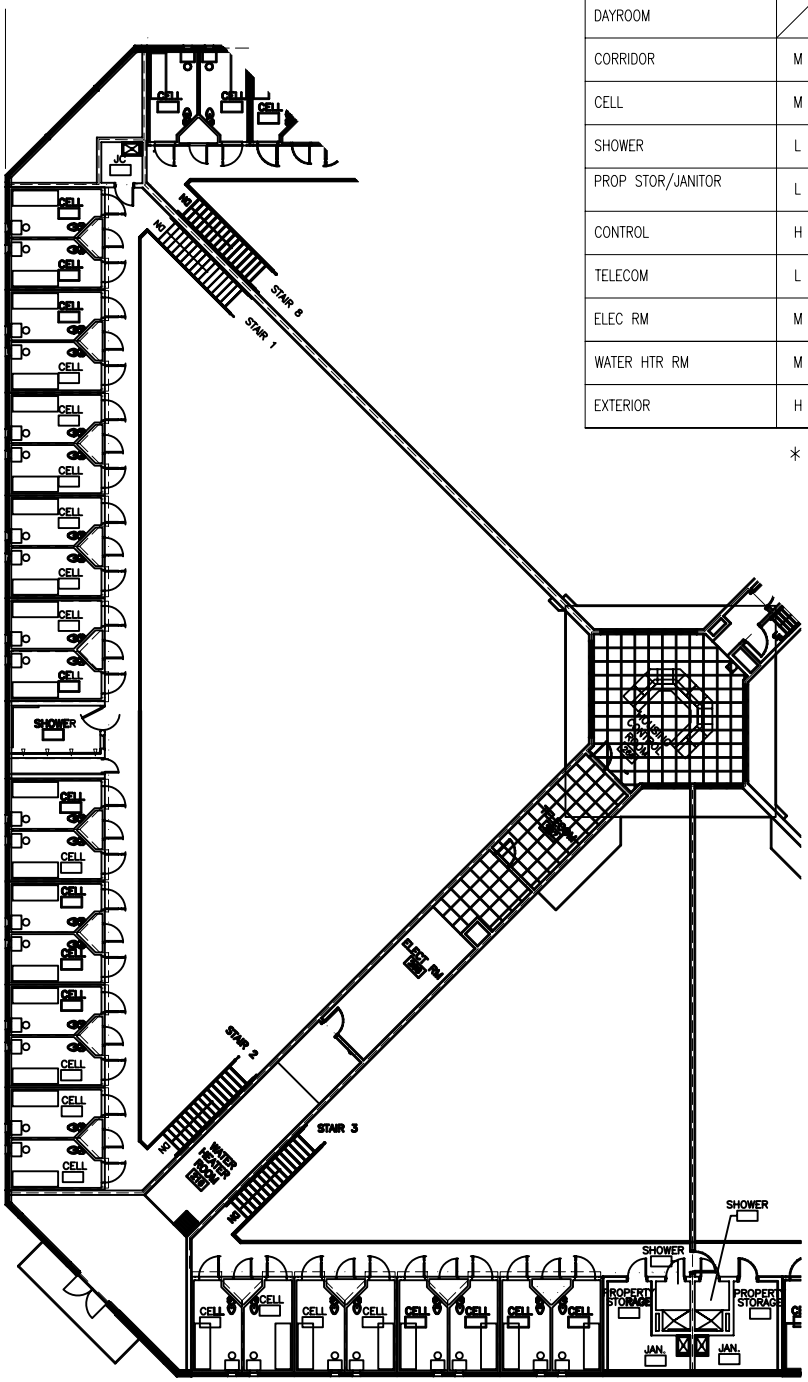

SECURITY WALL TYPE

H: HIGH

M: MEDIUM

L: LOW

PLAN DIAGRAM SHOWS REPRESENTATIVE APPLICATIONS OF SECURITY WALLS IN A TYPICAL HOUSING UNIT.

DETENTION CONSTRUCTION STANDARDS **SERVICE PROCESSING CENTER**

U.S. Immigration and Customs Enforcement

REF NUMBER:

DATE: 08 OCTOBER 2004

SCALE: NOT TO SCALE

TITLE: TYPICAL SECURITY WALL TYPES AT HOUSING - 2ND FLOOR

NUMBER **01-105**

File: 01-105.dwg

SECURITY WALL TYPE

H: HIGH

M: MEDIUM

L: LOW

SECURITY WALL TYPE ADJACENCIES	SALLYPORT	CENTRAL CONTROL RM	SECURITY EQUIPMENT RM
SALLYPORT			
CENTRAL CONTROL RM	H		
SECURITY EQUIPMENT RM	H	M	

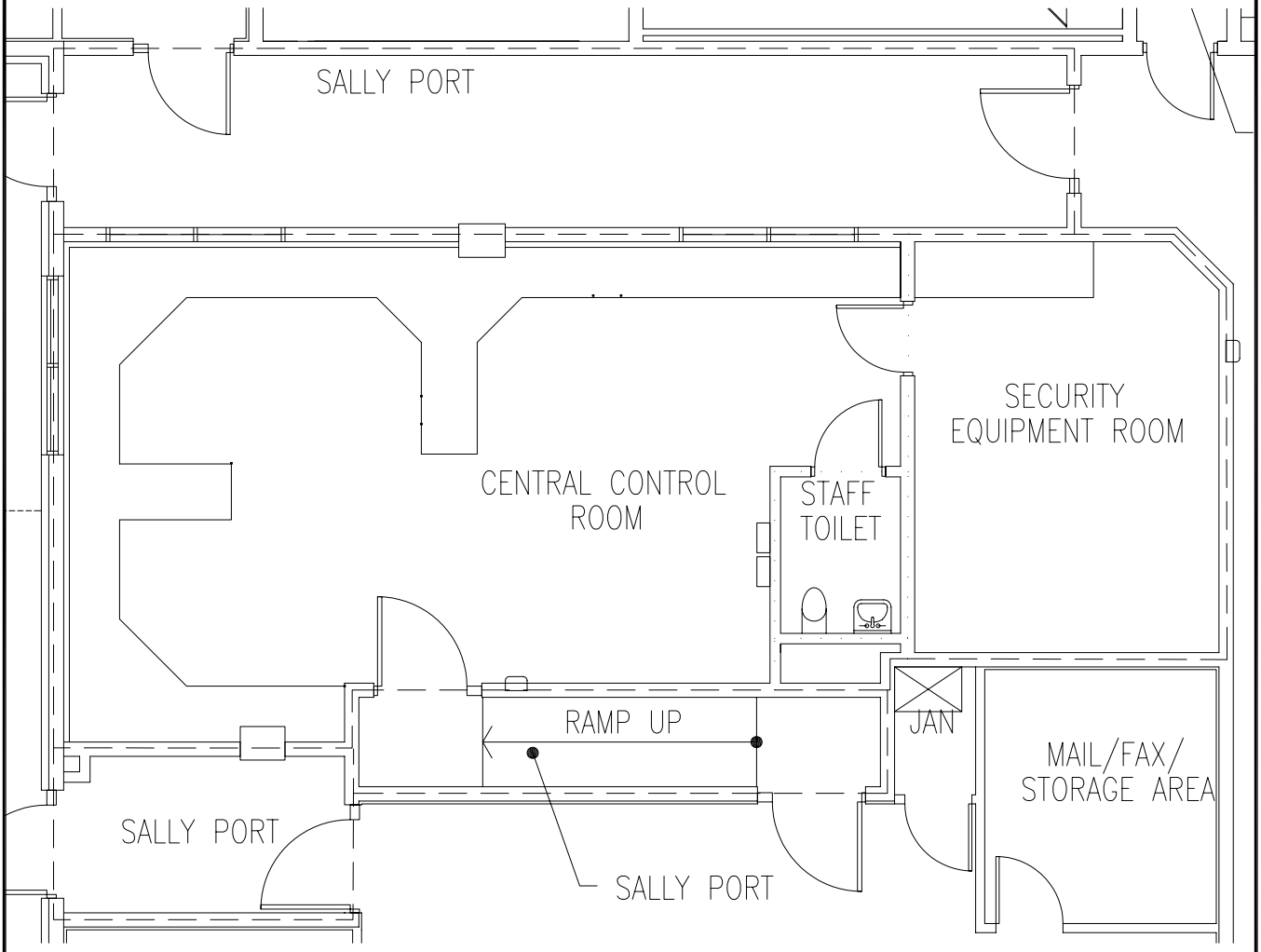

PLAN DIAGRAM SHOWS REPRESENTATIVE APPLICATIONS OF SECURITY WALLS IN A TYPICAL CENTRAL/MASTER CONTROL FACILITY.

DETENTION CONSTRUCTION STANDARDS **SERVICE PROCESSING CENTER**

U.S. Immigration and Customs Enforcement

REF NUMBER:

DATE: 08 OCTOBER 2004

SCALE: 1/8" = 1'-0"

TITLE: TYPICAL SECURITY WALL TYPES AT MASTER CONTROL

NUMBER **01-106**

File: 01-106.dwg

SECURITY WALL TYPE

H: HIGH

M: MEDIUM

L: LOW

PLAN DIAGRAM SHOWS REPRESENTATIVE APPLICATIONS OF SECURITY WALLS IN A TYPICAL DETAINEE PROCESSING FACILITY.

SECURITY WALL TYPE ADJACENCIES

	HOLDING	INPROCESSING	OUTPROCESSING	SALLYPORT
HOLDING				
INPROCESSING	H			
OUTPROCESSING	H	M		
SALLYPORT	H	H	H	

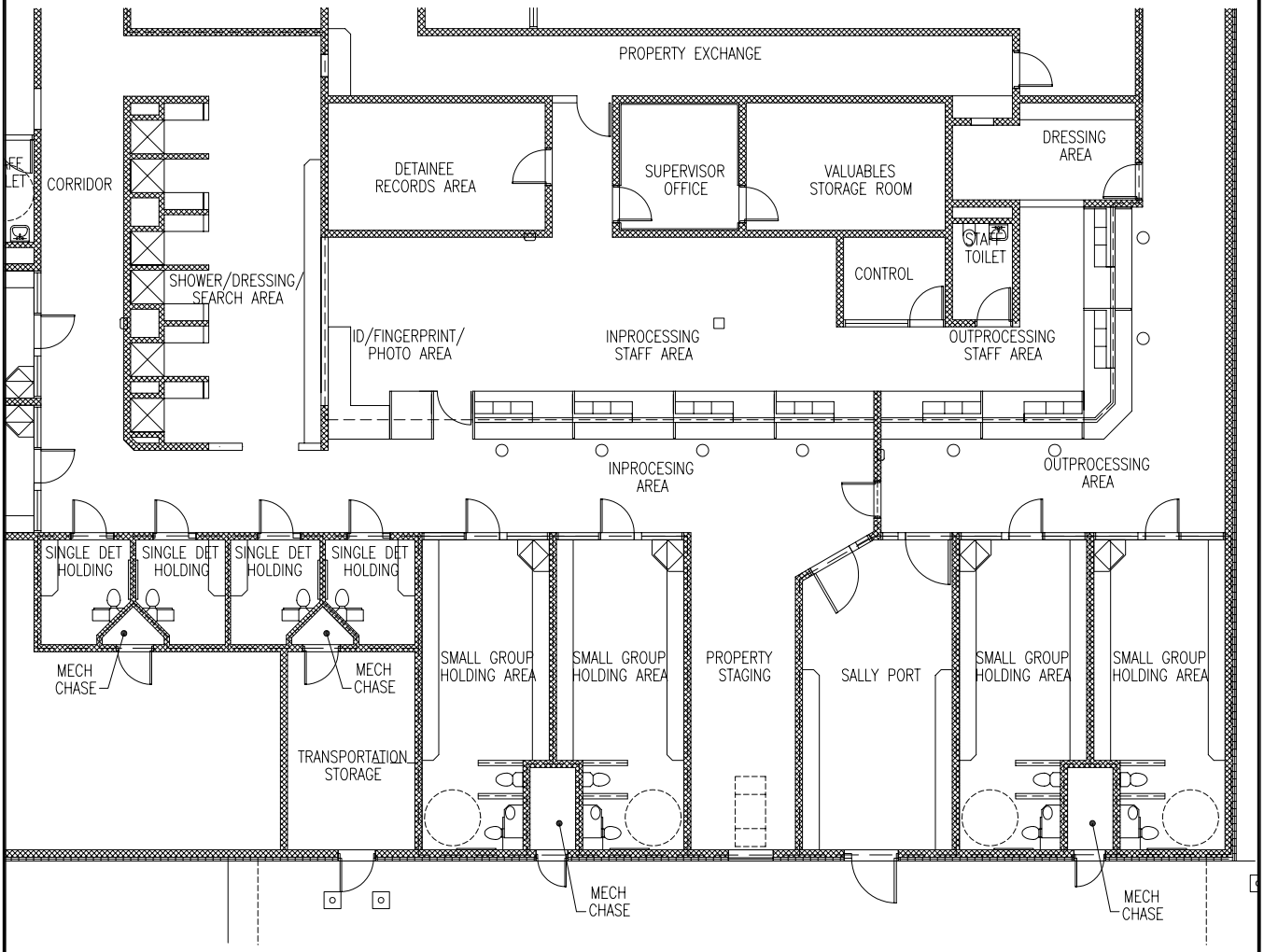

DETENTION CONSTRUCTION STANDARDS **SERVICE PROCESSING CENTER**

U.S. Immigration and Customs Enforcement

REF NUMBER:

DATE: 08 OCTOBER 2004

SCALE: 1/16" = 1'-0"

TITLE: TYPICAL SECURITY WALL TYPES AT DETAINEE PROCESSING

NUMBER **01-107**

File: 01-107.dwg

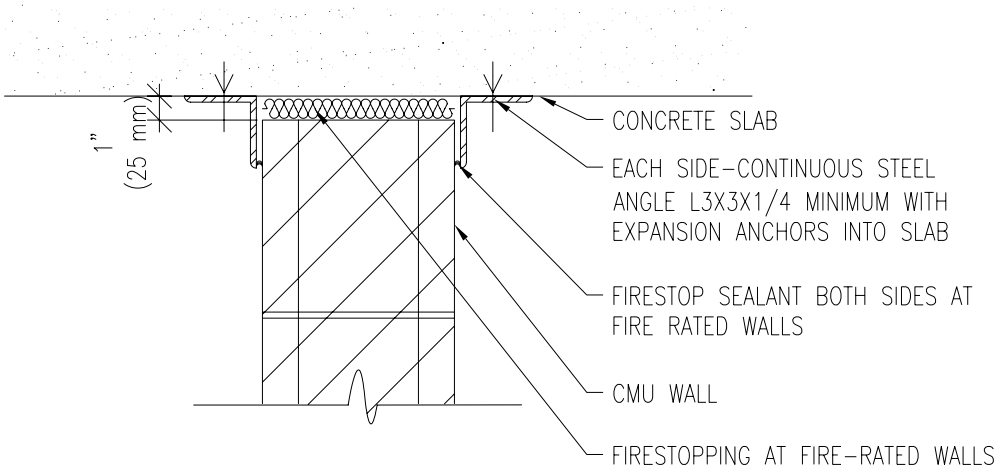

TOP OF SECURITY WALL CLOSURE TO CONCRETE SLAB

DETENTION CONSTRUCTION STANDARDS			SERVICE PROCESSING CENTER
U.S. Immigration and Customs Enforcement	**REF NUMBER:** 01-101/ 01-102/ 01-103	**TITLE:** TOP OF SECURITY WALL CLOSURE TO CONCRETE SLAB	**NUMBER** 01-108
	DATE: 08 OCTOBER 2004		
	SCALE: 1 1/8" = 1'-0"		File: 01-108.dwg

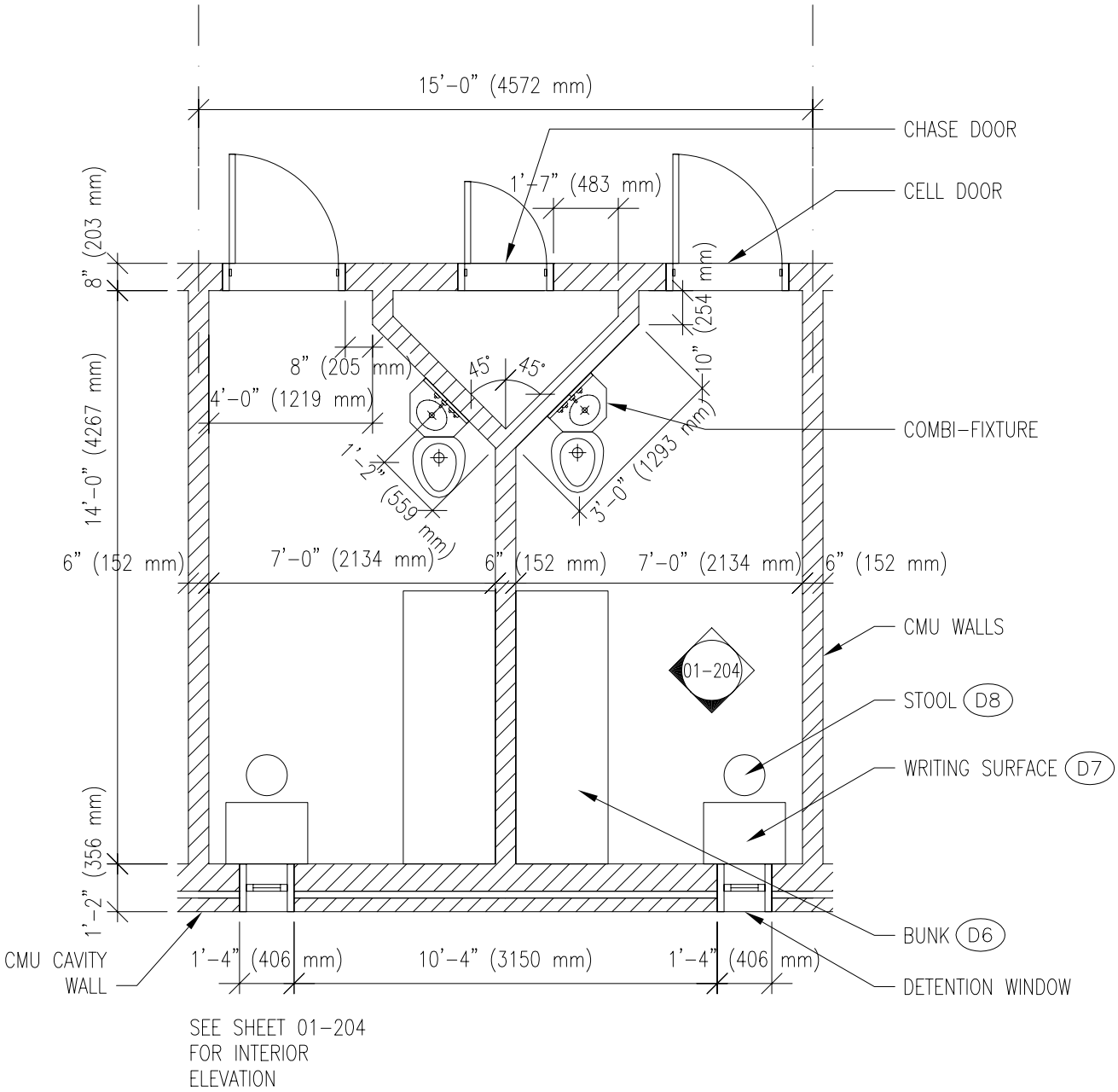

TYPICAL DETAINEE CELL PLAN WITH CONCRETE MASONRY

DETENTION CONSTRUCTION STANDARDS			SERVICE PROCESSING CENTER
U.S. Immigration and Customs Enforcement	**REF NUMBER:**	**TITLE:** TYPICAL DETAINEE CELL PLAN WITH CONCRETE MASONRY	**NUMBER** 01-201
	DATE: 08 OCTOBER 2004		File: 01-201.dwg
	SCALE: 1/4" = 1'-0"		

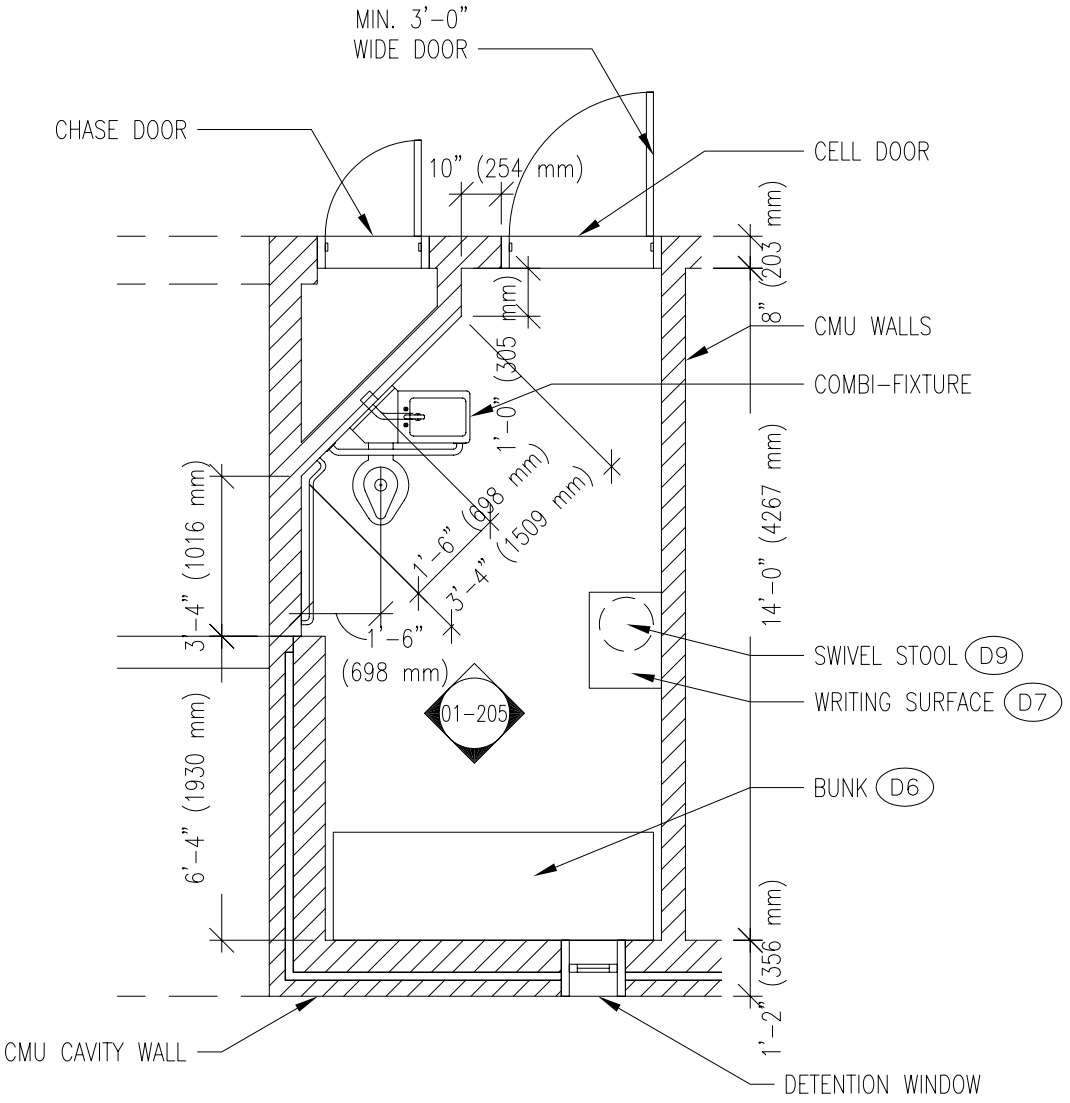

SEE SHEET 01-205
FOR INTERIOR
ELEVATIONS

TYPICAL DETAINEE ACCESSIBLE CELL WITH CONCRETE MASONRY

DETENTION CONSTRUCTION STANDARDS			SERVICE PROCESSING CENTER
U.S. Immigration and Customs Enforcement	**REF NUMBER:**	**TITLE:** TYPICAL DETAINEE ACCESSIBLE CELL WITH CONCRETE MASONRY	**NUMBER** 01-202
	DATE: 08 OCTOBER 2004		File: 01-202.dwg
	SCALE: 1/4" = 1'-0"		

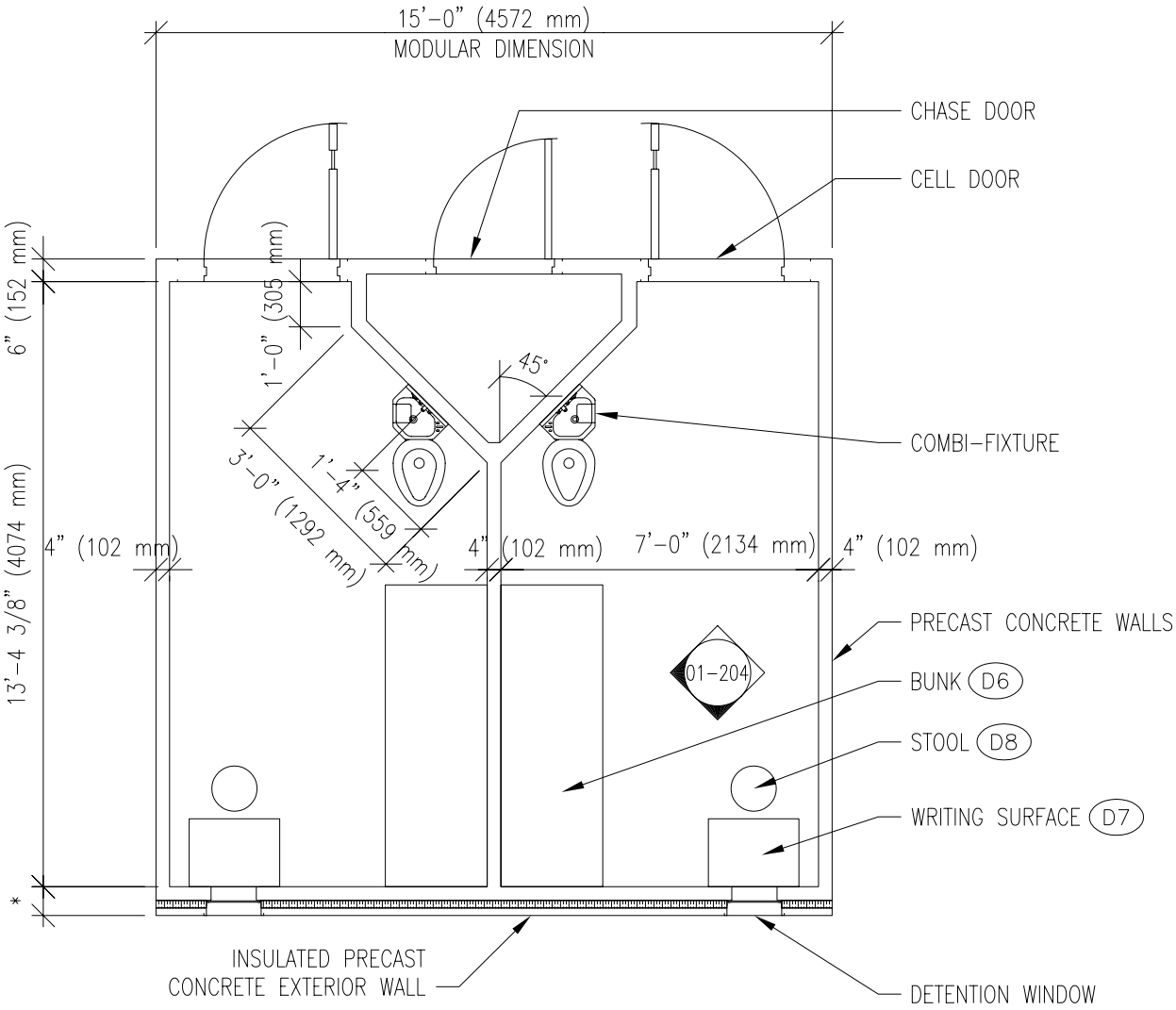

* INNER FACE OF PANEL MINIMUM 4" (102 mm). TOTAL WALL PANEL THICKNESS RANGES 8 7/8" - 11" (225 mm - 280 mm).

DIMENSIONS MAY VARY DEPENDING ON MANUFACTURER

SEE 01-204 FOR INTERIOR ELEVATION

TYPICAL DETAINEE PRECAST CONCRETE MODULAR CELLS

DETENTION CONSTRUCTION STANDARDS			SERVICE PROCESSING CENTER
U.S. Immigration and Customs Enforcement	**REF NUMBER:**	**TITLE:** TYPICAL DETAINEE PRECAST CONCRETE MODULAR CELLS	**NUMBER** 01-203
	DATE: 08 OCTOBER 2004		File: 01-203.dwg
	SCALE: 1/4" = 1'-0"		

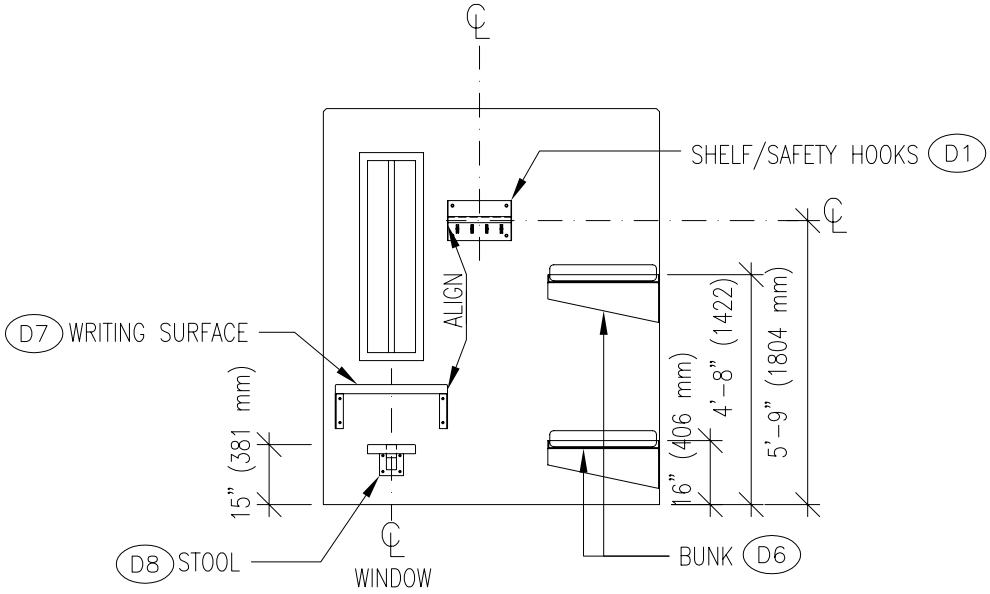

TYPICAL CELL ELEVATION – BUNK WALL

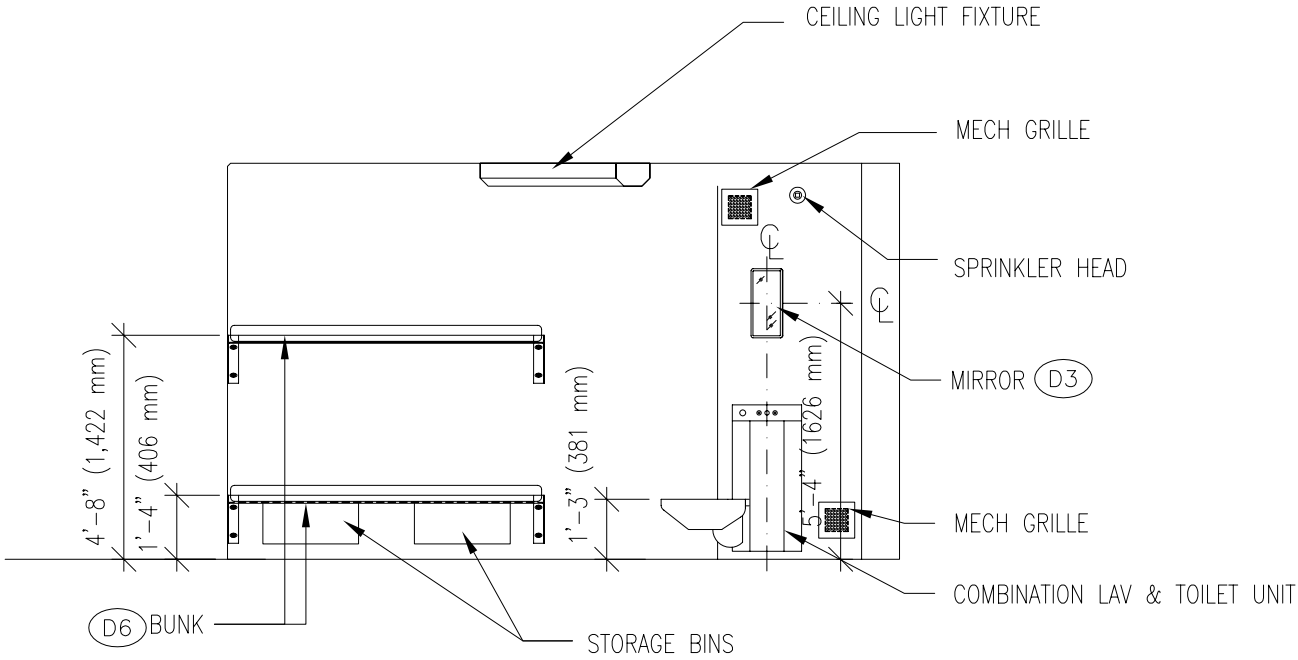

TYPICAL CELL ELEVATION – SIDE WALL

DETENTION CONSTRUCTION STANDARDS			SERVICE PROCESSING CENTER
U.S. Immigration and Customs Enforcement	**REF NUMBER:** 01-201, 01-203	**TITLE:** TYPICAL CELL ELEVATION - SIDE WALL	**NUMBER** 01-204
	DATE: 08 OCTOBER 2004		File: 01-204.dwg
	SCALE: 1/4" = 1'-0"		

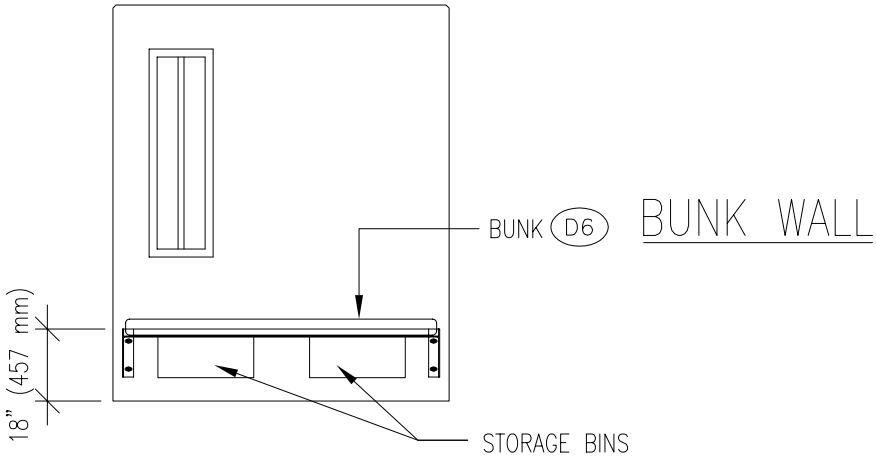

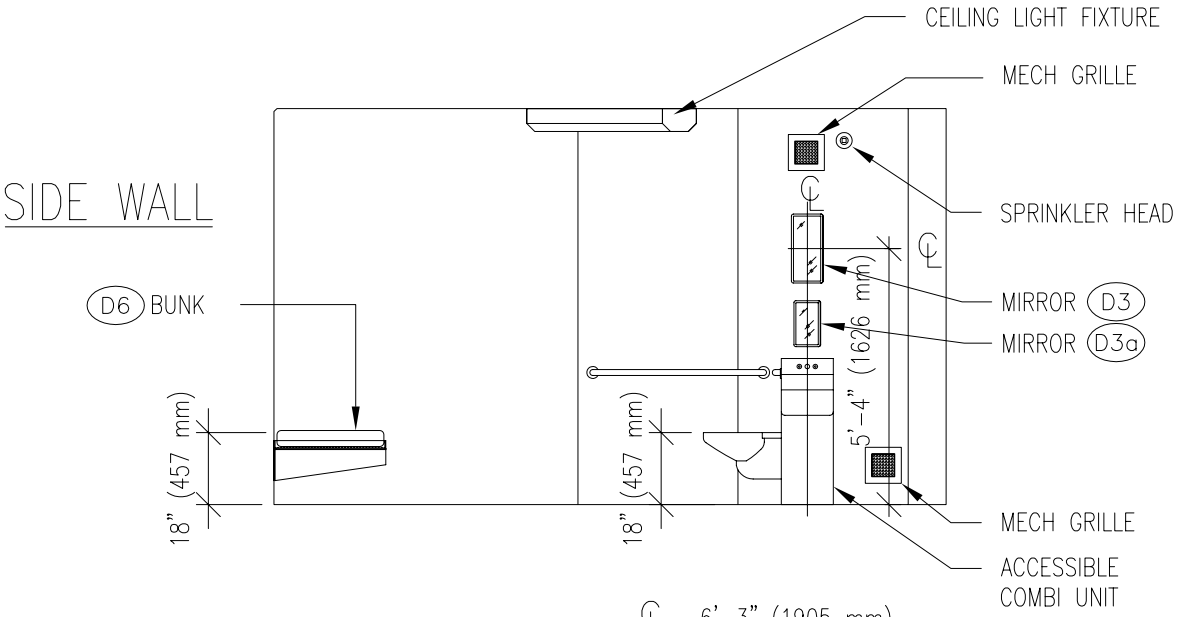

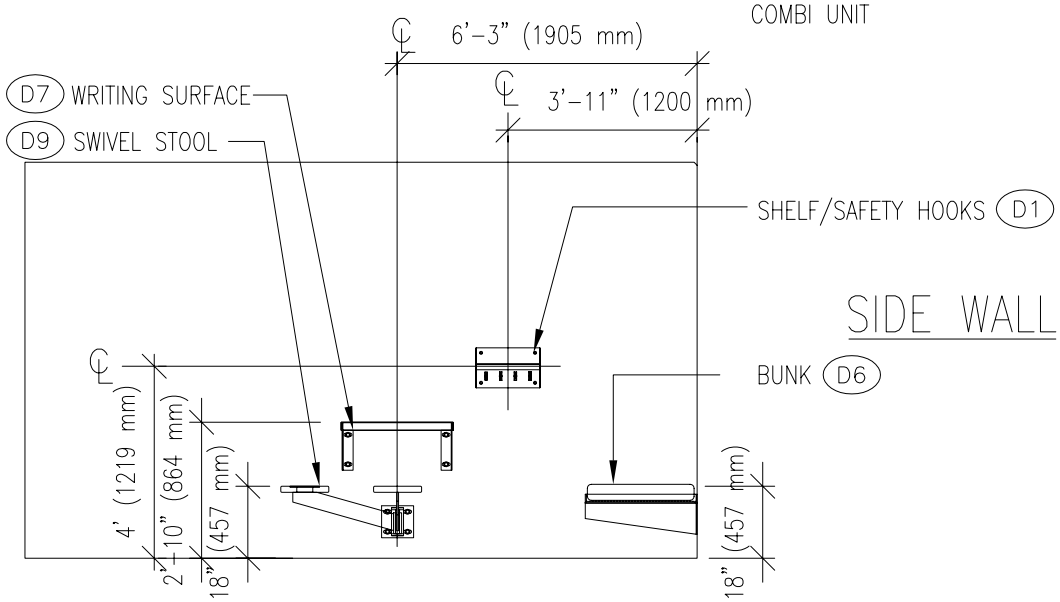

TYPICAL ACCESSIBLE CELL ELEVATIONS

DETENTION CONSTRUCTION STANDARDS | **SERVICE PROCESSING CENTER**

U.S. Immigration and Customs Enforcement

REF NUMBER: 01-202	**TITLE:** TYPICAL ACCESSIBLE CELL ELEVATIONS	**NUMBER** 01-205
DATE: 08 OCTOBER 2004		File: 01-205.dwg
SCALE: 1/4" = 1'-0"		

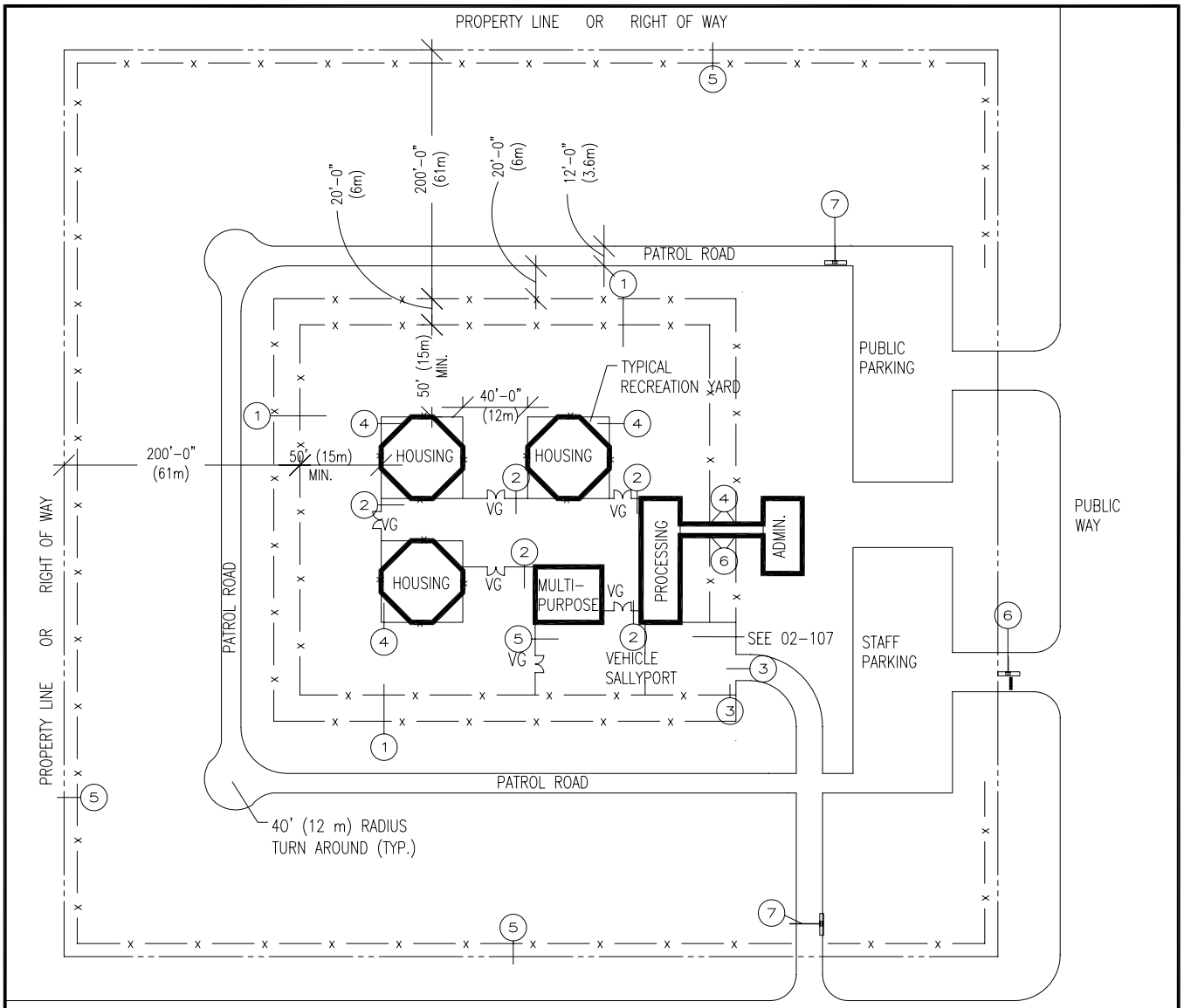

GENERIC SPC SITE DIAGRAM

KEYNOTES

1. TYPE 1 – DOUBLE PERIMETER SECURITY FENCE. SEE DETAIL 02-102
2. TYPE 2 – SECURITY FENCE TO DIVIDE FUNCTIONAL SECURE AREAS. SEE DETAIL 02-103
3. TYPE 3 – VEHICULAR SALLYPORT FENCE. SEE DETAIL 02-104
4. TYPE 4 – SECURITY FENCE – SEE 02-111
5. TYPE 5 – SECURITY FENCE. SEE DETAIL 02-105
6. TRAFFIC CONTROL GATE – DOUBLE LANE-SEE
7. TRAFFIC CONTROL GATE – SINGLE LANE SEE 02-112

VG = VEHICLE GATE (20'-0" WIDE)

(REFER TO TECHNICAL SPECIFICATIONS 02831 AND 11197)

DETENTION CONSTRUCTION STANDARDS **SERVICE PROCESSING CENTER**

U.S. Immigration and Customs Enforcement

REF NUMBER:	TITLE:	NUMBER
DATE: 08 OCTOBER 2004	SITE SECURITY CONCEPT SITE PLAN	02-101
SCALE: 1/128" = 1'-0"		File: 02-101.dwg

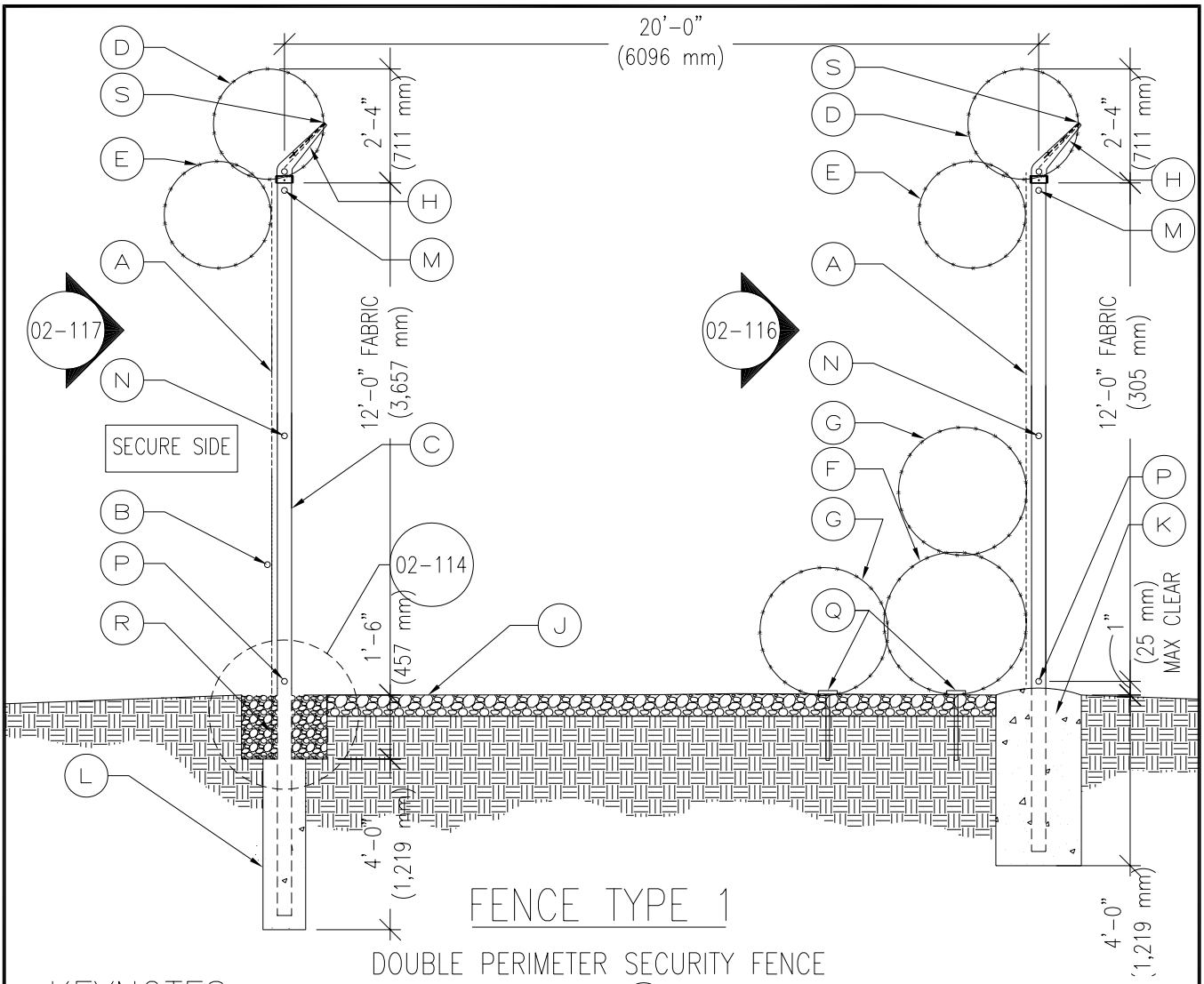

FENCE TYPE 1

DOUBLE PERIMETER SECURITY FENCE

KEYNOTES

(A) 2" (50 mm) MESH SIZE SECURITY CHAIN LINK FABRIC

(B) INTRUSION DETECTION SENSOR

(C) FENCE POST

(D) WIRE REINFORCED CONCERTINA – 30" (750 mm) DIAMETER

(E) WIRE REINFORCED CONCERTINA DETAINER HOOK BARB – 31" (787 mm) DIAMETER

(F) BARBED TAPE NON-REINFORCED OBSTACLE 40" (1016 mm) DIAMETER

(G) WIRE REINFORCED CONCERTINA – 36" (900 mm) DIAMETER

(H) 45 DEG. BARB ARM

(J) 6" (152 mm) LIGHT COLORED CRUSHED ROCK OVER 11 MIL (.28 MM) BLACK POLYPROPYLENE WOVEN WEED CONTROL FABRIC ON SOIL STERILIZATION.

(K) CONCRETE POST BASE

(L) CONCRETE RAT WALL – 1'-0" WIDE

(M) TOP RAIL

(N) MIDDLE RAIL

(P) BOTTOM RAIL

(Q) ANCHORS

(R) FENCE FABRIC BURIED IN AGGREGATE

(S) SINGLE STRAND BARBED WIRE AT END OF BARB ARM

(REFER TO TECHNICAL SPECIFICATIONS 02831)

DETENTION CONSTRUCTION STANDARDS **SERVICE PROCESSING CENTER**

U.S. Immigration and Customs Enforcement

REF NUMBER: 02-101	**TITLE:** FENCE TYPE 1 DOUBLE PERIMETER SECURITY FENCE	**NUMBER** 02-102
DATE: 08 OCTOBER 2004		File: 02-102.dwg
SCALE: 1/4" = 1'-0"		

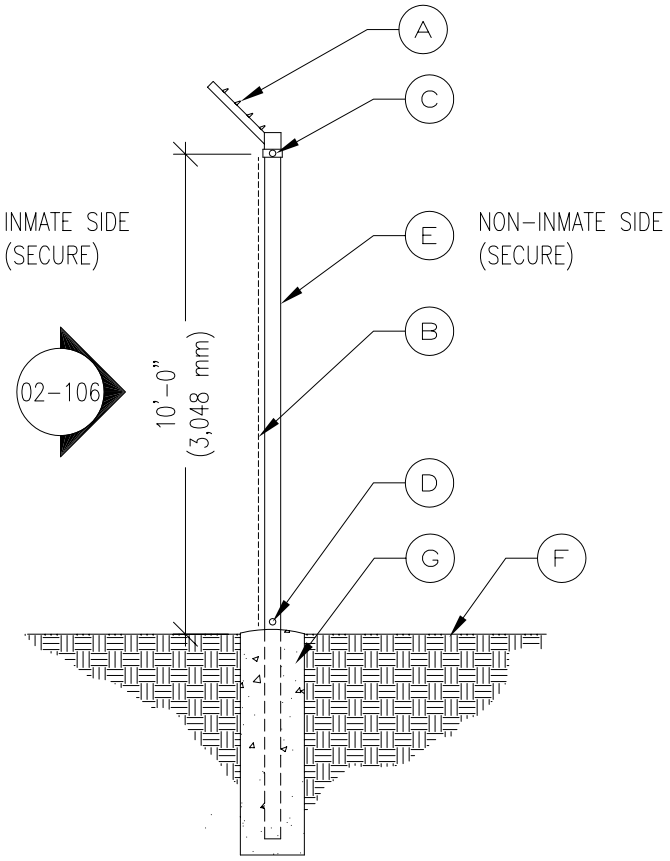

FENCE TYPE 2

SECURITY FENCE TO DIVIDE FUNCTIONAL SECURE AREAS

KEYNOTES

- (A) OUTRIGGER WITH 3 STRANDS BARBED WIRE
- (B) 2" (51 mm) SECURITY CHAIN LINK FABRIC
- (C) CONTINUOUS TOP RAIL
- (D) BOTTOM RAIL
- (E) POSTS AT 10'-0" (3,048 mm) O.C.
- (F) GRADE
- (G) CONCRETE POST BASE SIZE PER LOCAL SOIL CONDITIONS

DETENTION CONSTRUCTION STANDARDS **SERVICE PROCESSING CENTER**

U.S. Immigration and Customs Enforcement

REF NUMBER: 02-101	**TITLE:** FENCE TYPE 2 SECURITY FENCE	**NUMBER** 02-103
DATE: 08 OCTOBER 2004		File: 02-103.dwg
SCALE: 1/4" = 1'-0"		

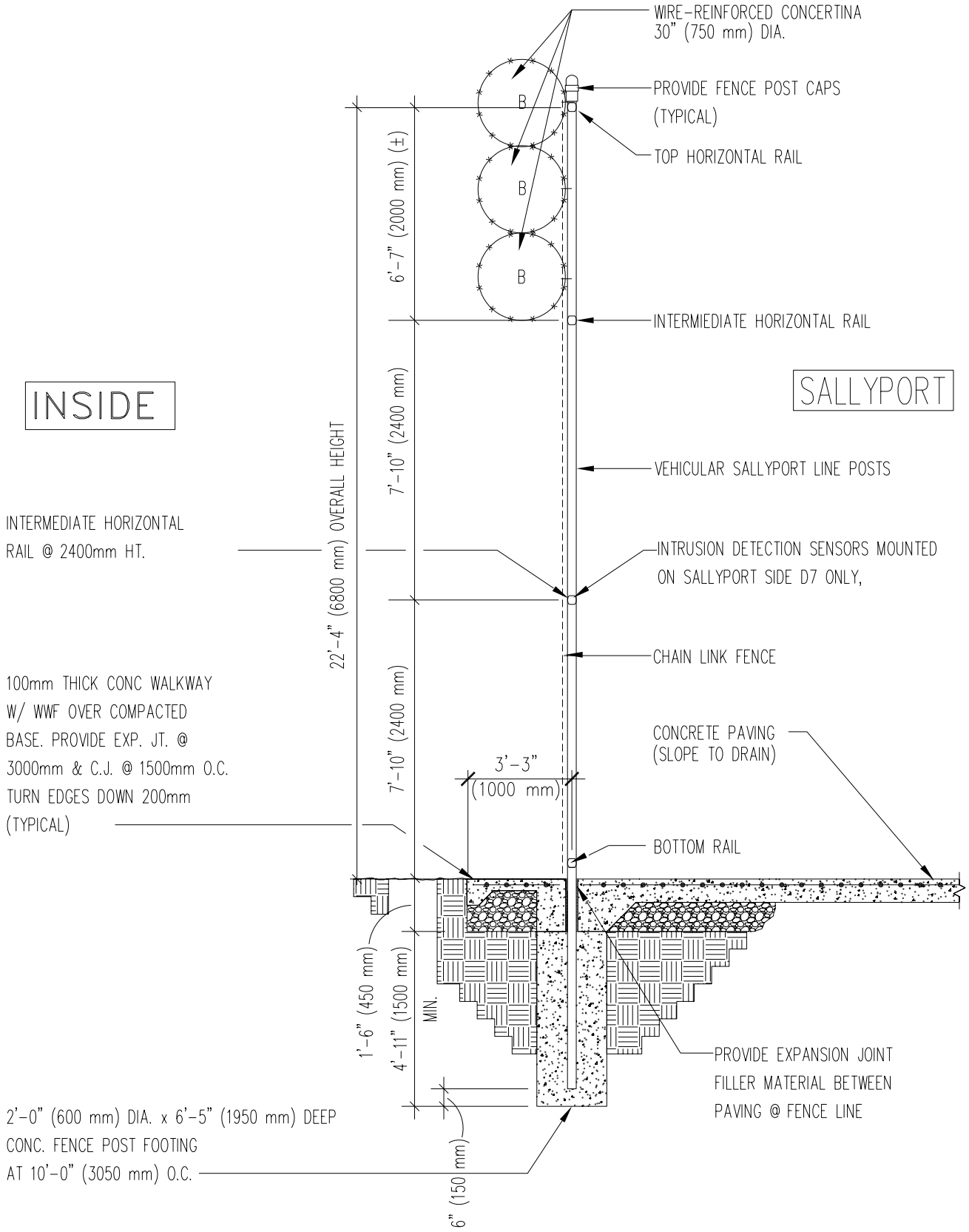

DETENTION CONSTRUCTION STANDARDS **SERVICE PROCESSING CENTER**

U.S. Immigration and Customs Enforcement

REF NUMBER: 02-107	**TITLE:**	**NUMBER**
DATE: 08 OCTOBER 2004	FENCE TYPE 3 VEHICLE SALLYPORT	**02-104**
SCALE: 1/4" = 1'-0"		File: 02-104.dwg

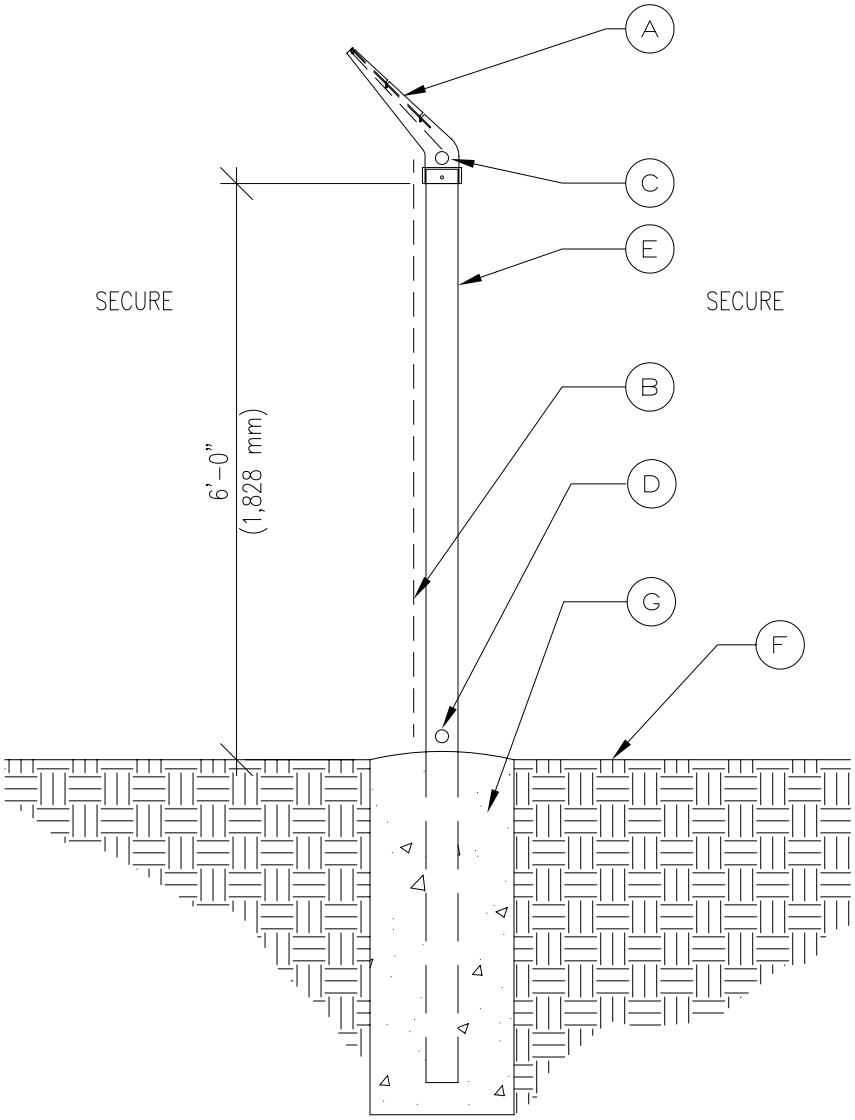

FENCE TYPE 5

SECURITY FENCE TO SEPARATE FUNCTIONAL AREAS

KEYNOTES

- (A) OUTRIGGER WITH 3 STRANDS BARBED WIRE
- (B) 2" (51 mm) SECURITY CHAIN LINK FABRIC
- (C) CONTINUOUS TOP RAIL
- (D) BOTTOM RAIL
- (E) POSTS AT 10'-0" (3,048 mm) O.C.
- (F) GRADE
- (G) CONCRETE POST BASE SIZE PER LOCAL SOIL CONDITIONS POST AT 10'-0" (3,048 mm) O.C.

DETENTION CONSTRUCTION STANDARDS			SERVICE PROCESSING CENTER
U.S. Immigration and Customs Enforcement	**REF NUMBER:** 02-101	**TITLE:**	**NUMBER**
	DATE: 08 OCTOBER 2004	FENCE TYPE 5 SECURITY FENCE	**02-105**
	SCALE: 1/2" = 1'-0"		File: 02-105.dwg

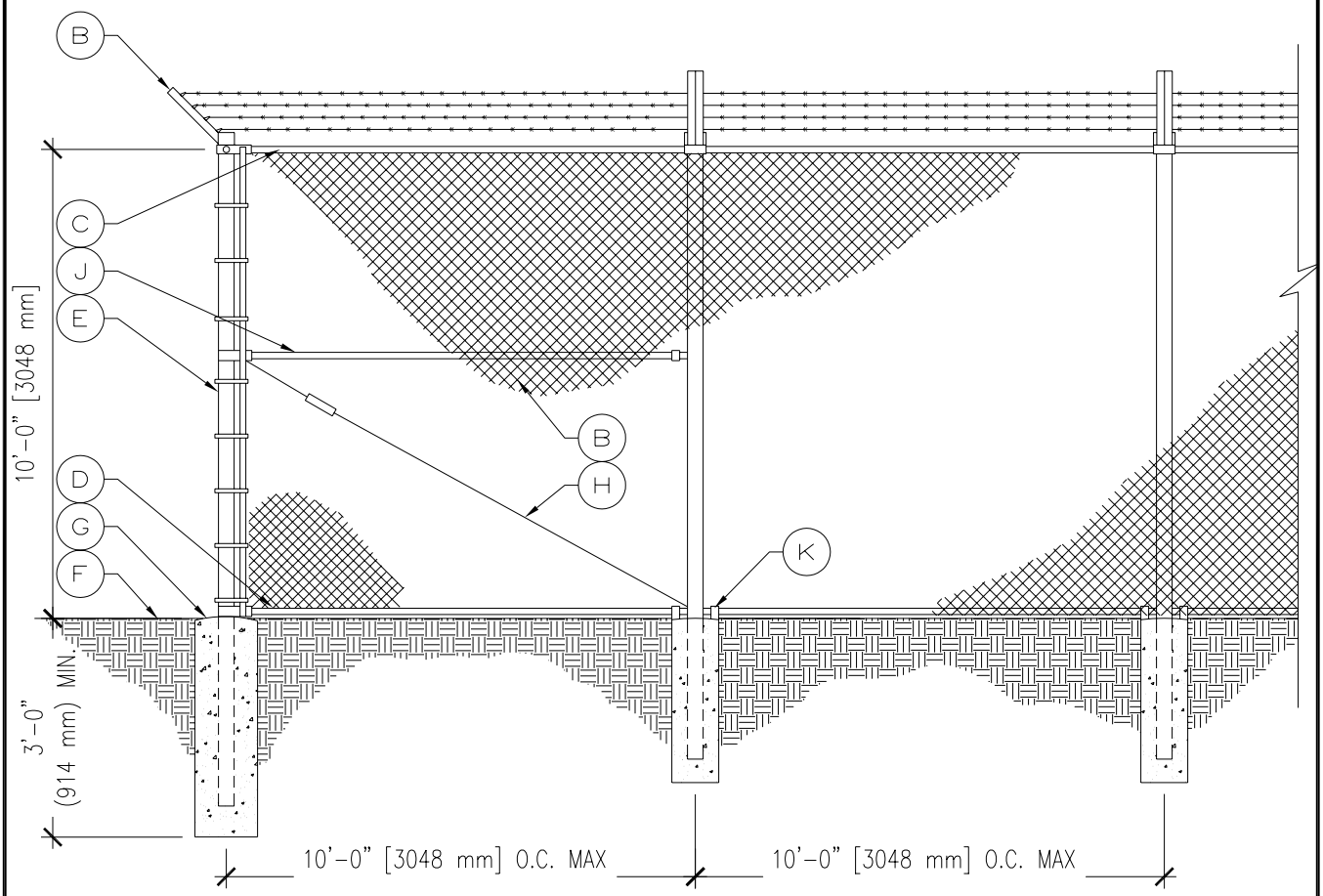

FENCE TYPE 2 AT CORNERS

KEYNOTES

- (A) OUTRIGGER WITH 3 STRANDS BARBED WIRE
- (B) 2" (51mm) SECURITY CHAIN LINK FABRIC
- (C) CONTINUOUS TOP RAIL
- (D) BOTTOM RAIL
- (E) POSTS AT 10'-0" (3,048 mm) O.C.
- (F) GRADE
- (G) CONCRETE POST BASE SIZE PER LOCAL SOIL CONDITIONS. POST AT 10'-0" (3,048 mm) O.C.
- (H) TRUSS ROD WITH TURNBUCKLE
- (J) MIDDLE RAIL
- (K) POST CLAMP

DETENTION CONSTRUCTION STANDARDS **SERVICE PROCESSING CENTER**

U.S. Immigration and Customs Enforcement

REF NUMBER: 02-103	**TITLE:**	**NUMBER**	
DATE: 08 OCTOBER 2004	FENCE TYPE 2 SECURITY FENCE AT CORNERS	**02-106**	
SCALE: 1/4" = 1'-0"		File: 02-106.dwg	

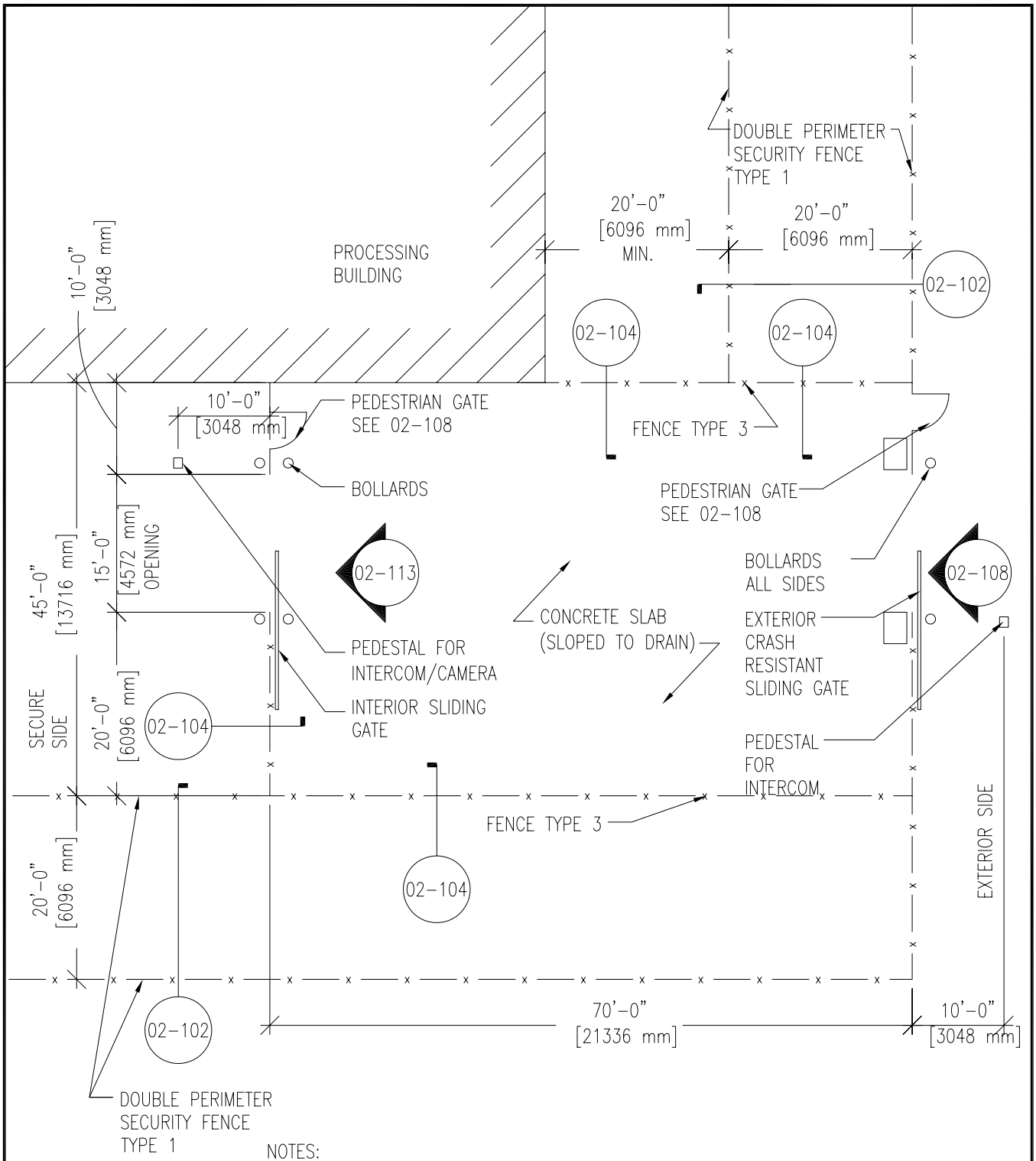

NOTES:

1. INTERIOR SLIDING GATE IS NOT SHOWN AS CRASH RESISTANT. IF REQUIRED FOR FORCE PROTECTION MEASURES, USE DETAIL 02-108 FOR BOTH VEHICLE GATES.

2. NOT ALL BOLLARDS THAT MAY BE REQUIRED FOR PROTECTION ARE SHOWN.

TYPICAL VEHICULAR SALLYPORT DIAGRAM

DETENTION CONSTRUCTION STANDARDS **SERVICE PROCESSING CENTER**

U.S. Immigration and Customs Enforcement

REF NUMBER: 02-101	**TITLE:** TYPICAL VEHICULAR SALLYPORT DIAGRAM	**NUMBER** 02-107
DATE: 08 OCTOBER 2004		File: 02-107.dwg
SCALE: 1/16" = 1'-0"		

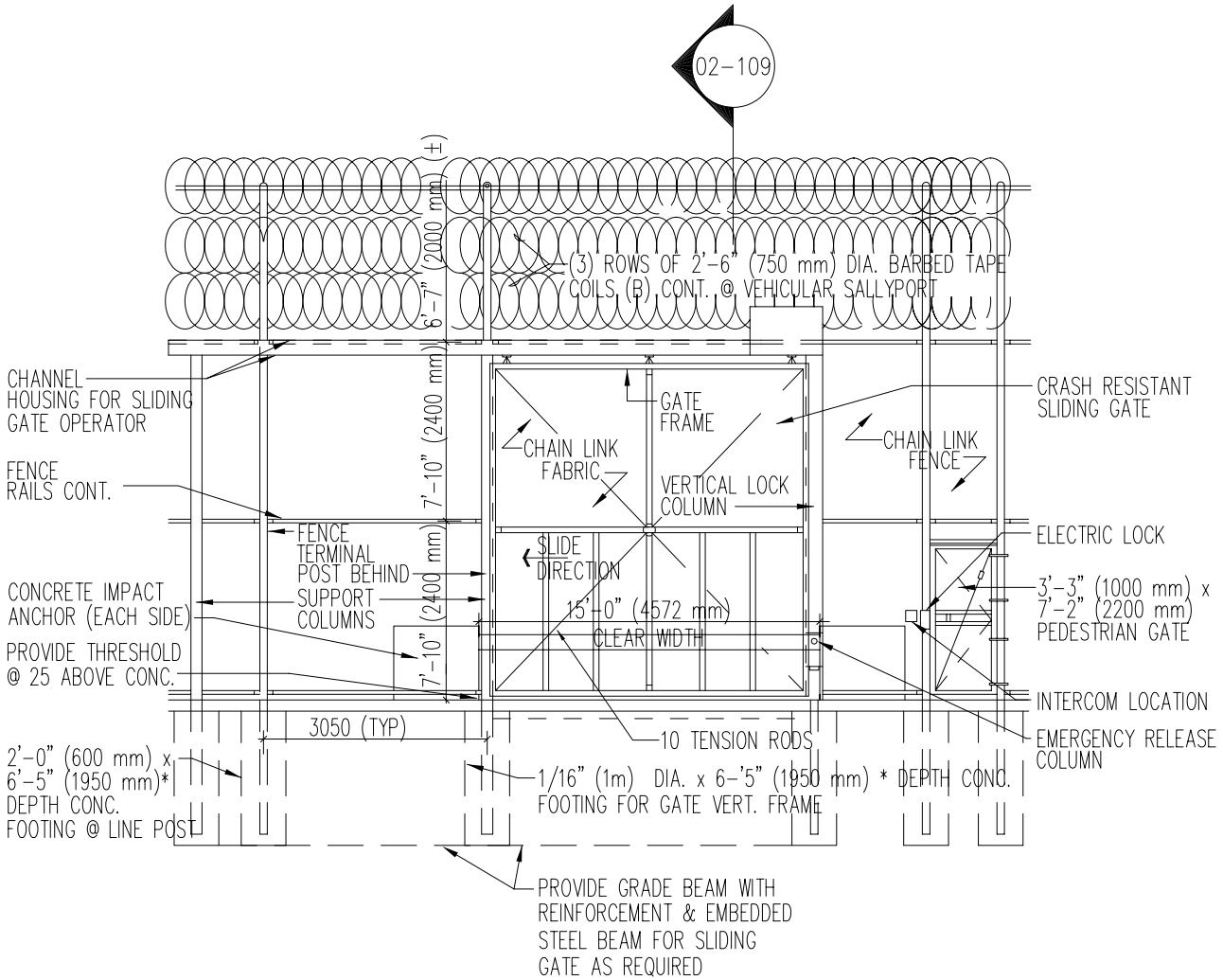

NOTES:

1. * MINIMUM DEPTH BELOW TOP OF CONCRETE PAVING (TYP.)
2. CLEAR OPENING HEIGHT FOR GATE SHALL BE 14'-9" (4500 mm) MINIMUM
3. ANCHORAGE FEATURES OF CRASH RESISTANT GATE MUST BE IN ACCORDANCE WITH A TESTED AND CERTIFIED CRASH RESISTANT ASSEMBLY.

SLIDING VEHICLE GATE (CRASH RESISTANT)

DETENTION CONSTRUCTION STANDARDS			SERVICE PROCESSING CENTER
U.S. Immigration and Customs Enforcement	**REF NUMBER:** 02-107	**TITLE:**	**NUMBER**
	DATE: 08 OCTOBER 2004	VEHICLE SALLYPORT GATE ELEVATION	**02-108**
	SCALE: 1/8" = 1'-0"		File: 02-108.dwg

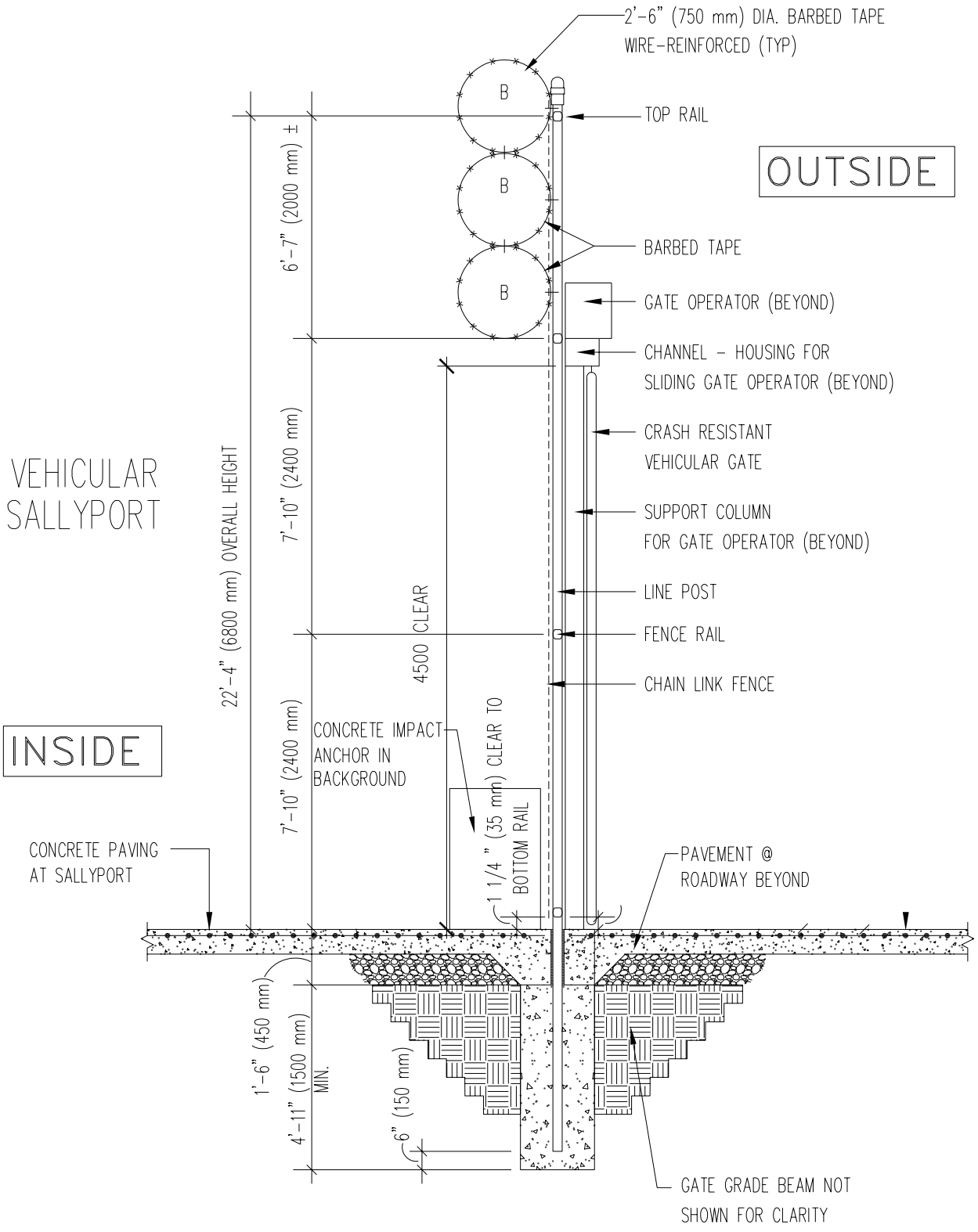

DETENTION CONSTRUCTION STANDARDS | **SERVICE PROCESSING CENTER**

U.S. Immigration and Customs Enforcement

REF NUMBER: 02-108	**TITLE:** TYPICAL FENCE SECTION @ VEHICULAR SALLYPORT	**NUMBER** 02-109
DATE: 08 OCTOBER 2004		File: 02-109.dwg
SCALE: 1/4" = 1'-0"		

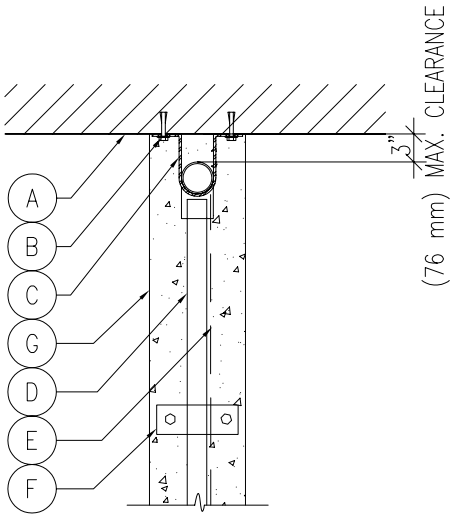

THIS PLAN DETAIL APPLIES WHERE PERIMETER SECURITY FENCE OR INTERIOR SECURITY FENCE ABUTS A SECURE BUILDING.

KEYNOTES

- (A) CONCRETE OR MASONRY WALL
- (B) EXPANTION ANCHOR EACH SIDE
- (C) POST CLAMP
- (D) BOTTOM RAIL
- (E) 2" (51 mm) SECURITY CHAIN LINK FABRIC
- (F) 3" (76 mm) WIDE BRACKET
- (G) GRADE BEAM WHERE OR RAT WALL OCCURS

DETENTION CONSTRUCTION STANDARDS			SERVICE PROCESSING CENTER
U.S. Immigration and Customs Enforcement	**REF NUMBER:** 02-101	**TITLE:**	**NUMBER**
	DATE: 08 OCTOBER 2004	PLAN DETAIL @ BLDG. PERIMETER SECURITY FENCE	**02-110**
	SCALE: 1/2" = 1'-0"		File: 02-110.dwg

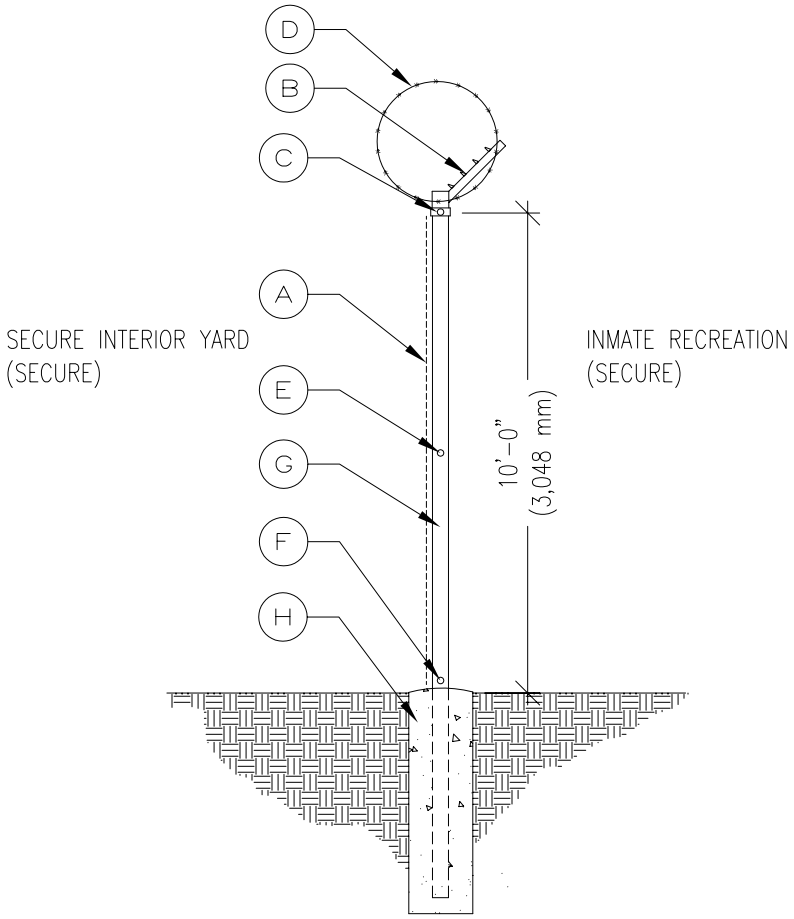

FENCE TYPE 4
SECURE FENCE AT INMATE RECREATION

KEYNOTES

- (A) 2" (51 mm) SECURITY CHAINLINK FABRIC
- (B) 45 DEG. BARB ARM
- (C) TOP RAIL
- (D) WIRE REINFORCED CONCERTINA 30" (750 mm) DIA.
- (E) MIDDLE RAIL
- (F) BOTTOM RAIL
- (G) FENCE POST
- (H) CONCRETE POST BASE

DETENTION CONSTRUCTION STANDARDS | **SERVICE PROCESSING CENTER**

U.S. Immigration and Customs Enforcement

REF NUMBER: 02-101	**TITLE:**	**NUMBER**
DATE: 08 OCTOBER 2004	FENCE TYPE 4 TYPICAL RECREATION YARD ENCLOSURE	**02-111**
SCALE: 1/4" = 1'-0"		File: 02-111.dwg

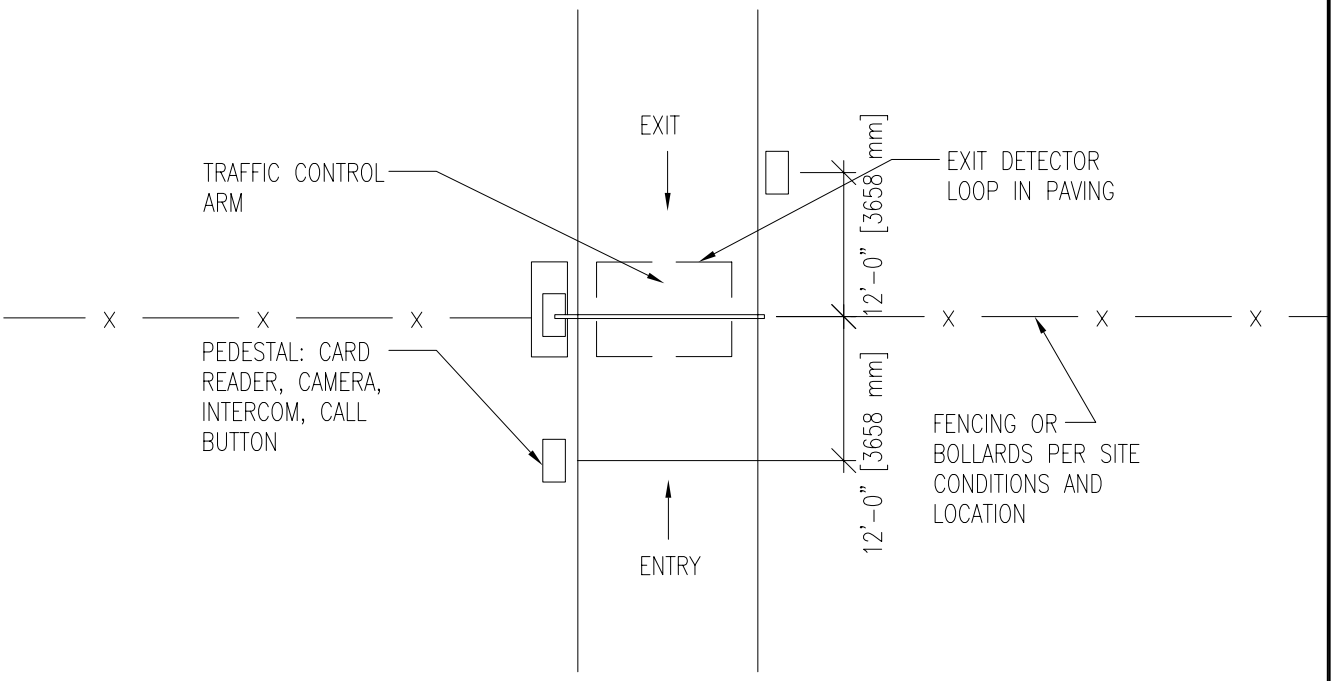

SINGLE LANE TRAFFIC CONTROL GATE

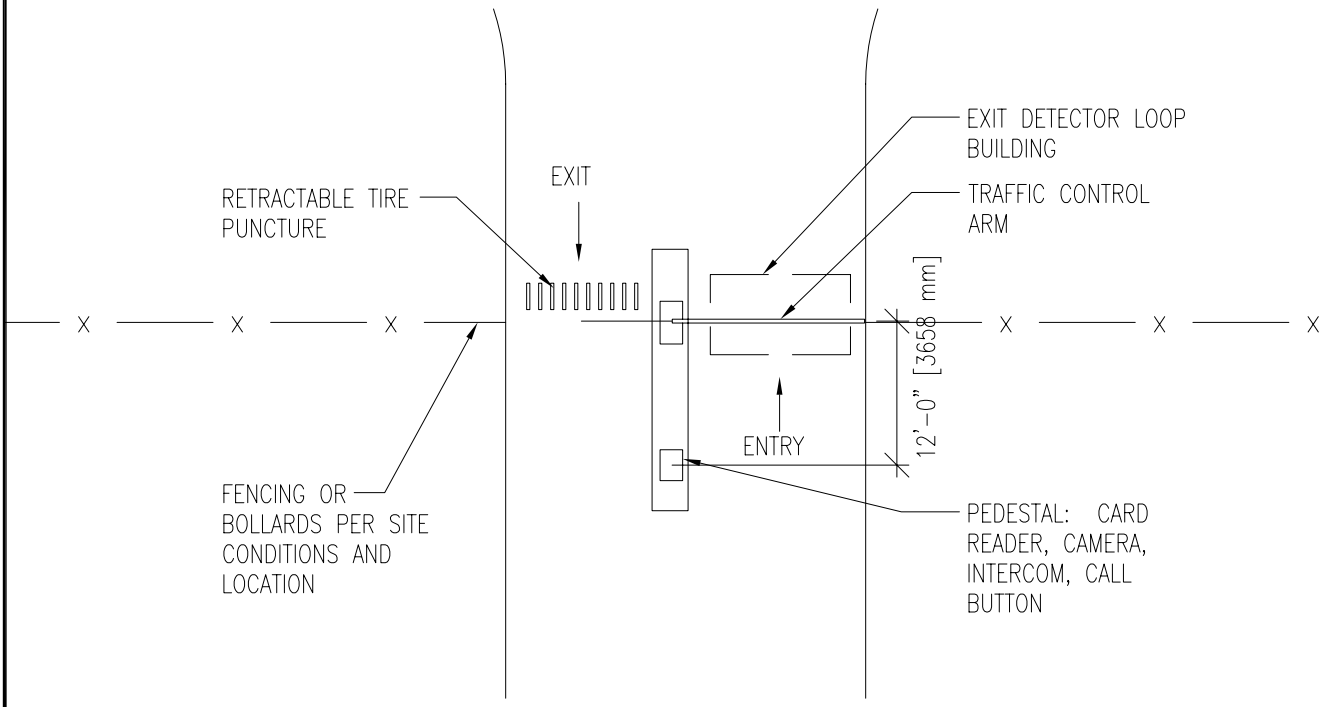

DOUBLE LANE TRAFFIC CONTROL GATE

DETENTION CONSTRUCTION STANDARDS **SERVICE PROCESSING CENTER**

U.S. Immigration and Customs Enforcement

REF NUMBER: 02-101	**TITLE:** TRAFFIC CONTROL GATES	**NUMBER** 02-112
DATE: 08 OCTOBER 2004		File: 02-112.dwg
SCALE: 1/16" = 1'-0"		

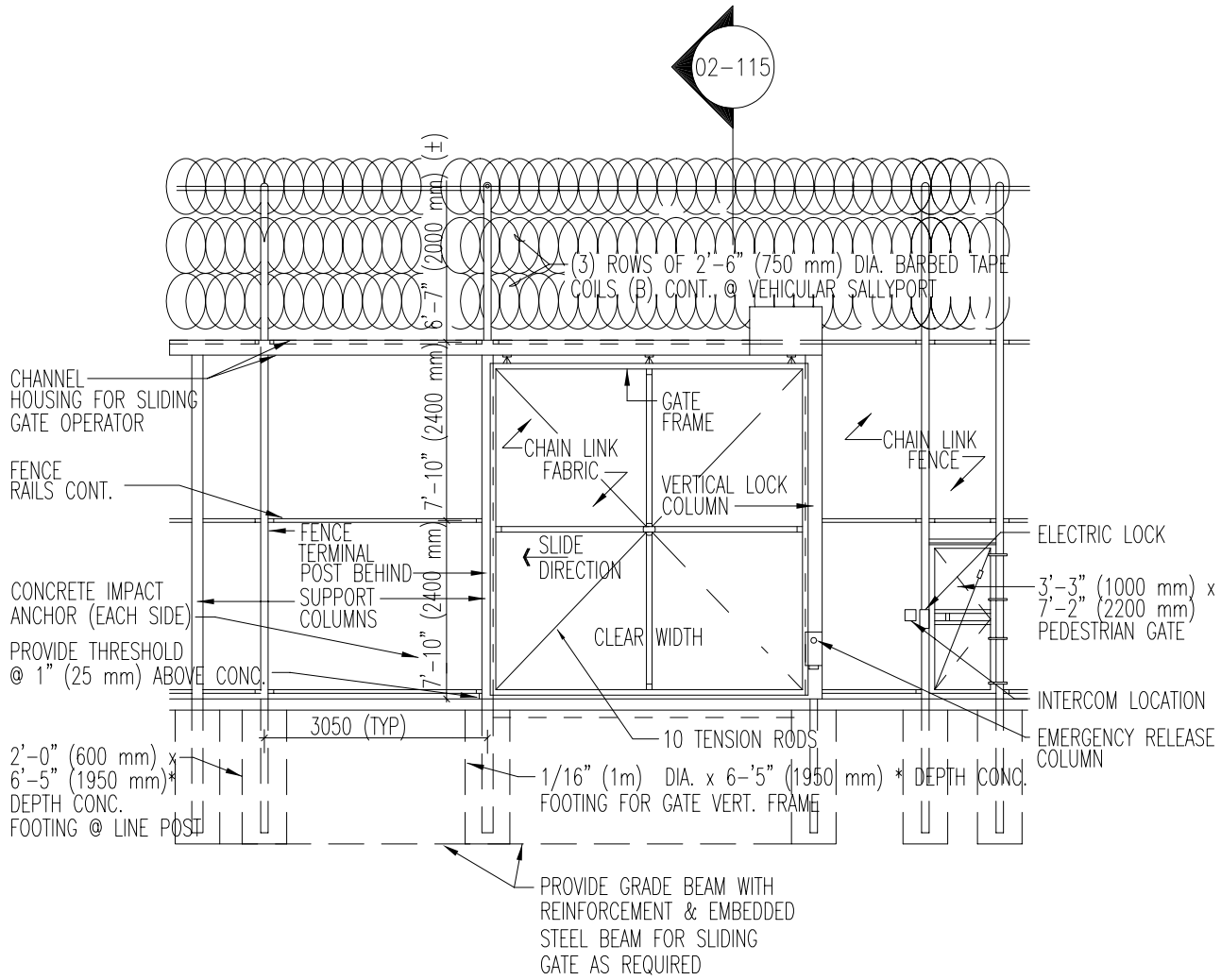

NOTES:

1. * MINIMUM DEPTH BELOW TOP OF CONCRETE PAVING (TYP.)
2. CLEAR OPENING HEIGHT FOR GATE SHALL BE 14'-9" (4500 mm) MINIMUM

SLIDING VEHICLE GATE

(NON-CRASH RESISTANT)

DETENTION CONSTRUCTION STANDARDS		SERVICE PROCESSING CENTER	
U.S. Immigration and Customs Enforcement	**REF NUMBER:** 02-107	**TITLE:**	**NUMBER**
	DATE: 08 OCTOBER 2004	VEHICLE SALLYPORT GATE ELEVATION	**02-113**
	SCALE: 1/8" = 1'-0"		File: 02-113.dwg

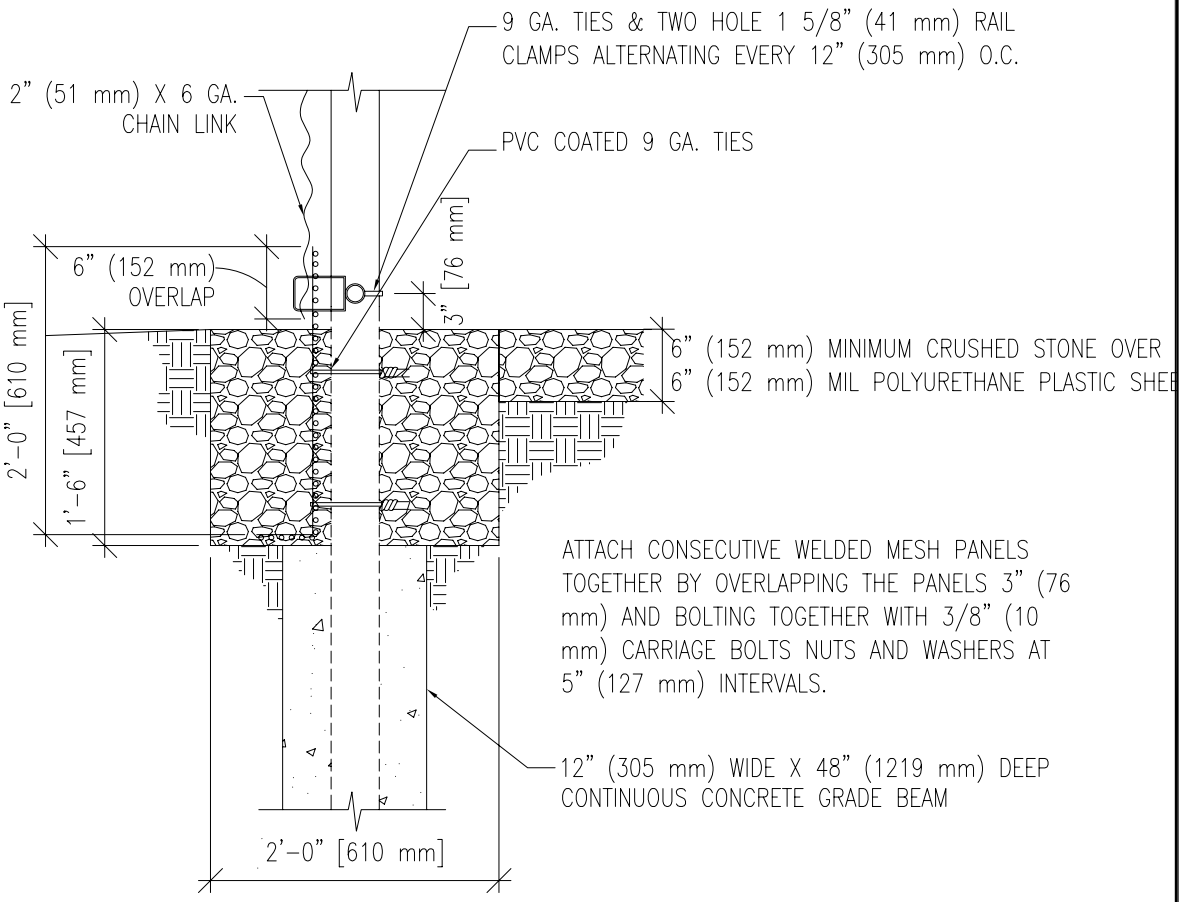

BURIED FABRIC DETAIL

DETENTION CONSTRUCTION STANDARDS			SERVICE PROCESSING CENTER
U.S. Immigration and Customs Enforcement	**REF NUMBER:** 02-102	**TITLE:**	**NUMBER**
	DATE: 08 OCTOBER 2004	BURIED FABRIC DETAIL	**02-114**
	SCALE: 3/4" = 1'-0"		File: 02-114.dwg

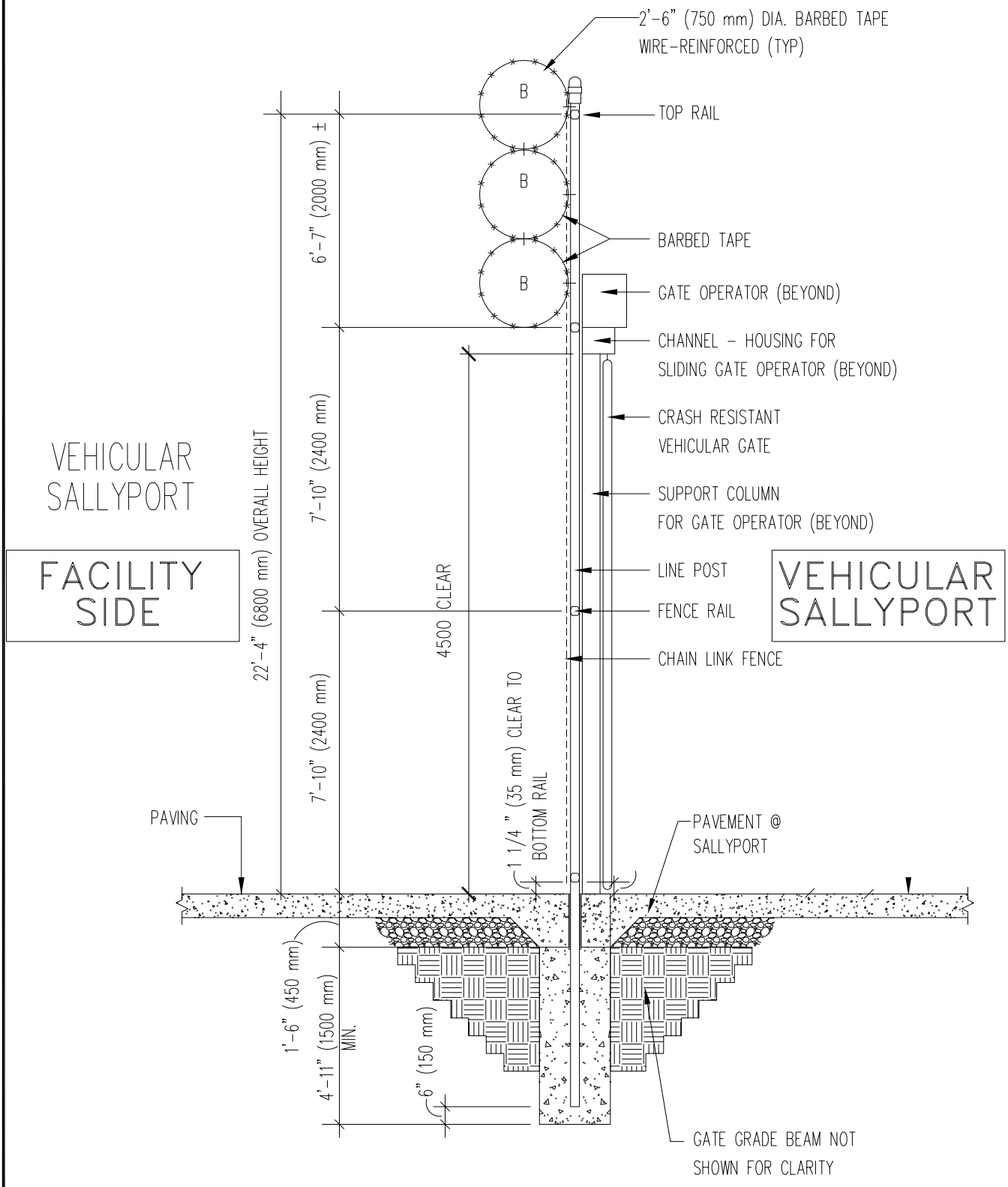

DETENTION CONSTRUCTION STANDARDS **SERVICE PROCESSING CENTER**

U.S. Immigration and Customs Enforcement

REF NUMBER: 02-113	**TITLE:** TYPICAL FENCE SECTION @ VEHICULAR SALLYPORT	**NUMBER** 02-115
DATE: 08 OCTOBER 2004		File: 02-109.dwg
SCALE: 1/4" = 1'-0"		

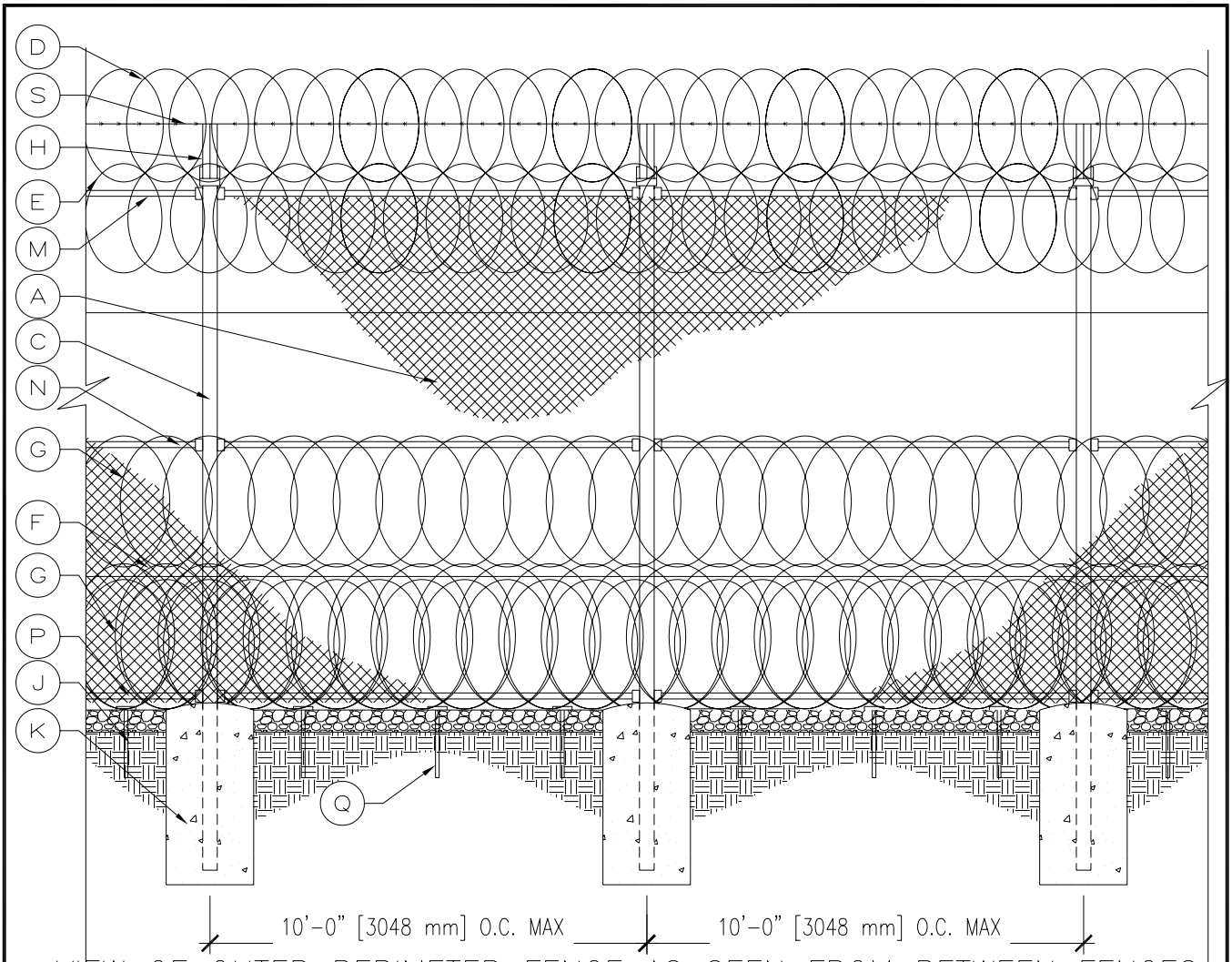

VIEW OF OUTER PERIMETER FENCE AS SEEN FROM BETWEEN FENCES

KEYNOTES

- (A) 2" (50 mm) MESH SIZE SECURITY CHAIN LINK FABRIC
- (B) NOT USED
- (C) FENCE POST
- (D) WIRE REINFORCED CONCERTINA – 30" (750 mm) DIAMETER
- (E) WIRE REINFORCED CONCERTINA DETAINER HOOK BARB – 31" (787 mm) DIAMETER
- (F) BARBED TAPE NON-REINFORCED OBSTACLE 40" (1016 mm) DIAMETER
- (G) WIRE REINFORCED CONCERTINA – 36" (900 mm) DIAMETER
- (H) 45 DEG. BARB ARM
- (J) 6" (152 mm) LIGHT COLORED CRUSHED ROCK OVER 11 MIL (.28 MM) BLACK POLYPROPYLENE WOVEN WEED CONTROL FABRIC ON SOIL STERILIZATION.
- (K) CONCRETE POST BASE
- (L) CONCRETE RAT WALL – 1'-0" WIDE
- (M) TOP RAIL
- (N) MIDDLE RAIL
- (P) BOTTOM RAIL
- (Q) ANCHORS
- (R) NOT USED
- (S) SINGLE STRAND BARBED WIRE AT END OF BARB ARM

DETENTION CONSTRUCTION STANDARDS **SERVICE PROCESSING CENTER**

U.S. Immigration and Customs Enforcement

REF NUMBER: 02-102	**TITLE:**	**NUMBER**
DATE: 08 OCTOBER 2004	FENCE TYPE 1 DOUBLE PERIMETER SECURITY FENCE SIDE VIEW OF OUTER FENCE	**02-116**
SCALE: 1/4" = 1'-0"		File: 02-116.dwg

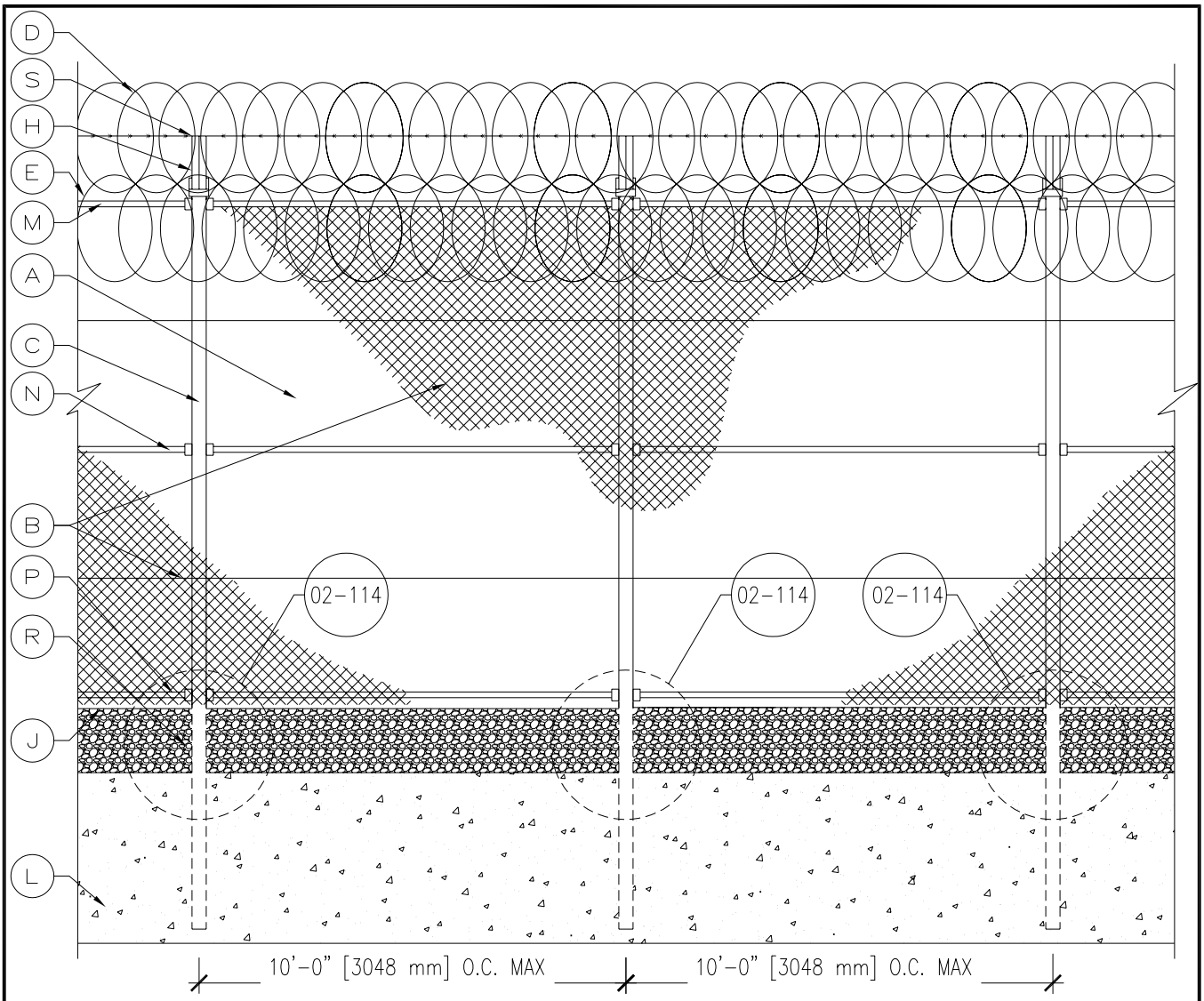

VIEW OF INNER PERIMETER FENCE AS SEEN FROM SECURE SIDE

KEYNOTES

- (A) 2" (50 mm) MESH SIZE SECURITY CHAIN LINK FABRIC
- (B) INTRUSION DETECTION SENSOR
- (C) FENCE POST
- (D) WIRE REINFORCED CONCERTINA – 30" (750 mm) DIAMETER
- (E) WIRE REINFORCED CONCERTINA DETAINER HOOK BARB – 31" (787 mm) DIAMETER
- (F) NOT USED
- (G) NOT USED
- (H) 45 DEG. BARB ARM
- (J) 6" (152 mm) LIGHT COLORED CRUSHED ROCK OVER 11 MIL (.28 MM) BLACK POLYPROPYLENE WOVEN WEED CONTROL FABRIC ON SOIL STERILIZATION.
- (K) CONCRETE POST BASE
- (L) CONCRETE RAT WALL – 1'-0" WIDE
- (M) TOP RAIL
- (N) MIDDLE RAIL
- (P) BOTTOM RAIL
- (Q) NOT USED
- (R) FENCE FABRIC BURIED IN AGGREGATE
- (S) SINGLE STRAND BARBED WIRE AT END OF BARB ARM

DETENTION CONSTRUCTION STANDARDS **SERVICE PROCESSING CENTER**

U.S. Immigration and Customs Enforcement

REF NUMBER: 02-102	**TITLE:**	**NUMBER**	
DATE: 08 OCTOBER 2004	FENCE TYPE 1 DOUBLE PERIMETER SECURITY FENCE SIDE VIEW OF INNER FENCE	**02-117**	
SCALE: 1/4" = 1'-0"		File: 02-117.dwg	

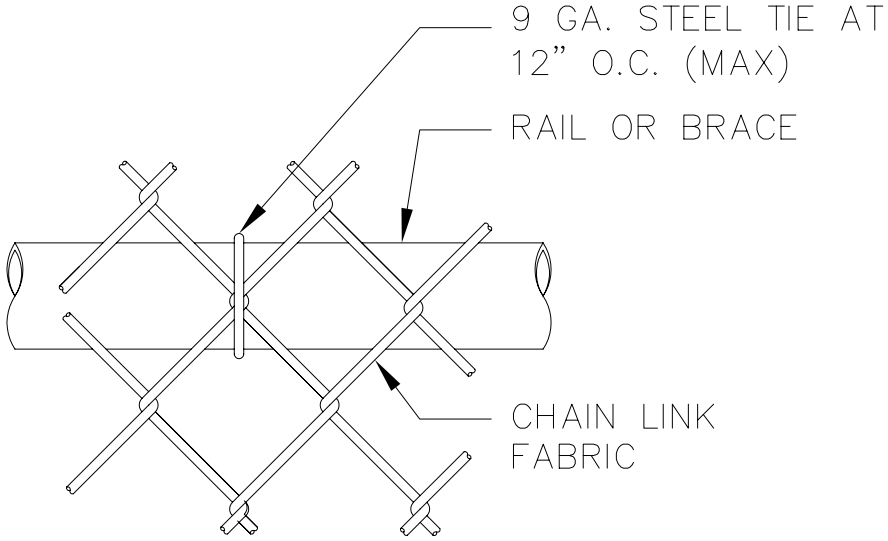

TOP OR BRACE RAIL ATTACHMENT

WIRE TIES SHALL BE PREFORMED POWER TWIST 9 GA. ALUMINIZED STEEL WITH EITHER A GALVANIZED COATING OR ALUMINUM COATING. (ALUMINUM WIRE NOT ALLOWED.) COATING OF TIE SHALL BE THE SAME TYPE AS FENCE FABRIC.

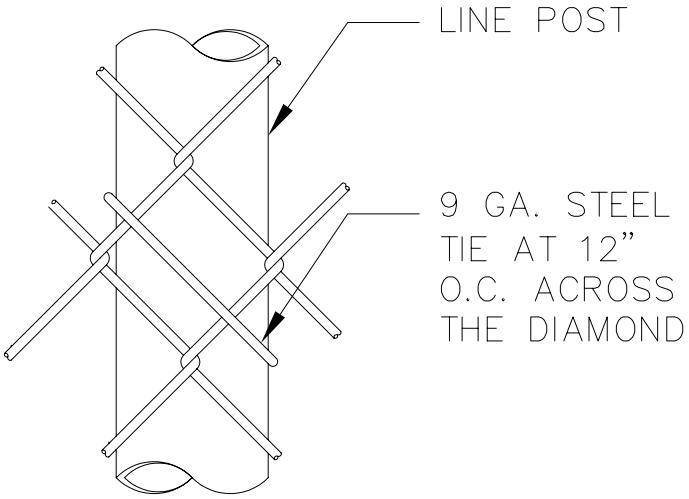

AT LINE POSTS

DETENTION CONSTRUCTION STANDARDS			SERVICE PROCESSING CENTER
U.S. Immigration and Customs Enforcement	**REF NUMBER:** 02-113	**TITLE:** TYPICAL FENCE TIES	**NUMBER** 02-118
	DATE: 08 OCTOBER 2004		File: 02-118.dwg
	SCALE: 1" = 1"		

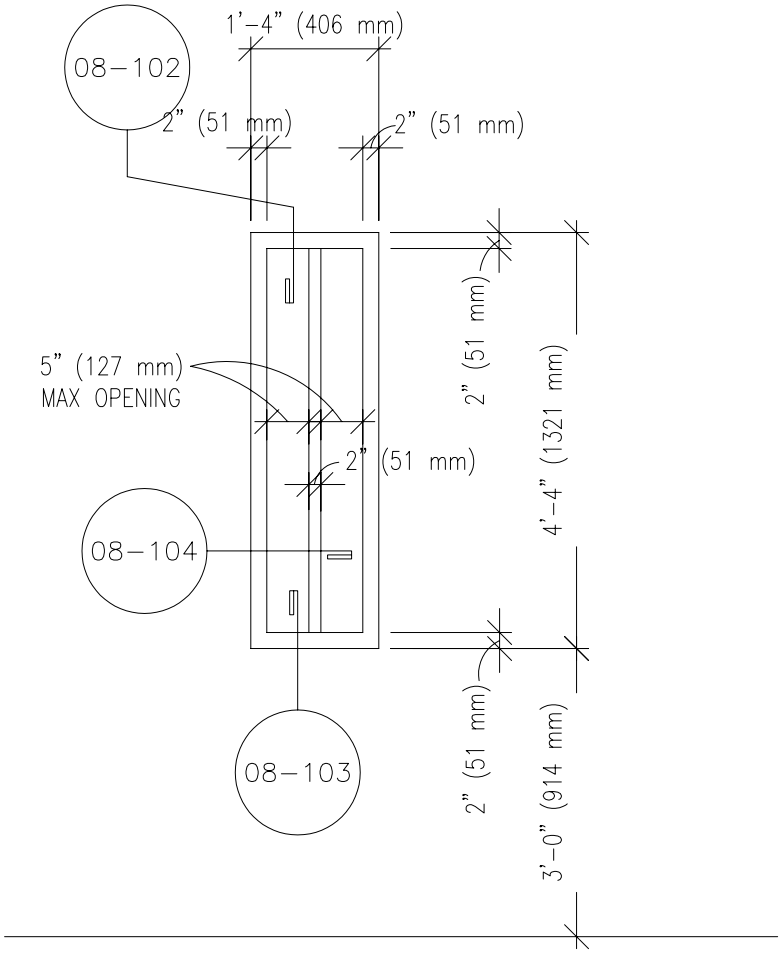

TYPICAL DETENTION CELL WINDOW AT CMU

SEE 08-105, 08-106, 08-107 FOR OPTIONAL CONDITIONS AT PRECAST CONCRETE CELLS

DETENTION CONSTRUCTION STANDARDS			SERVICE PROCESSING CENTER
U.S. Immigration and Customs Enforcement	**REF NUMBER:**	**TITLE:** TYPICAL DETENTION CELL WINDOW AT CMU	**NUMBER** 08-101
	DATE: 08 OCTOBER 2004		
	SCALE: 1/2" = 1'-0"		File: 08-101.dwg

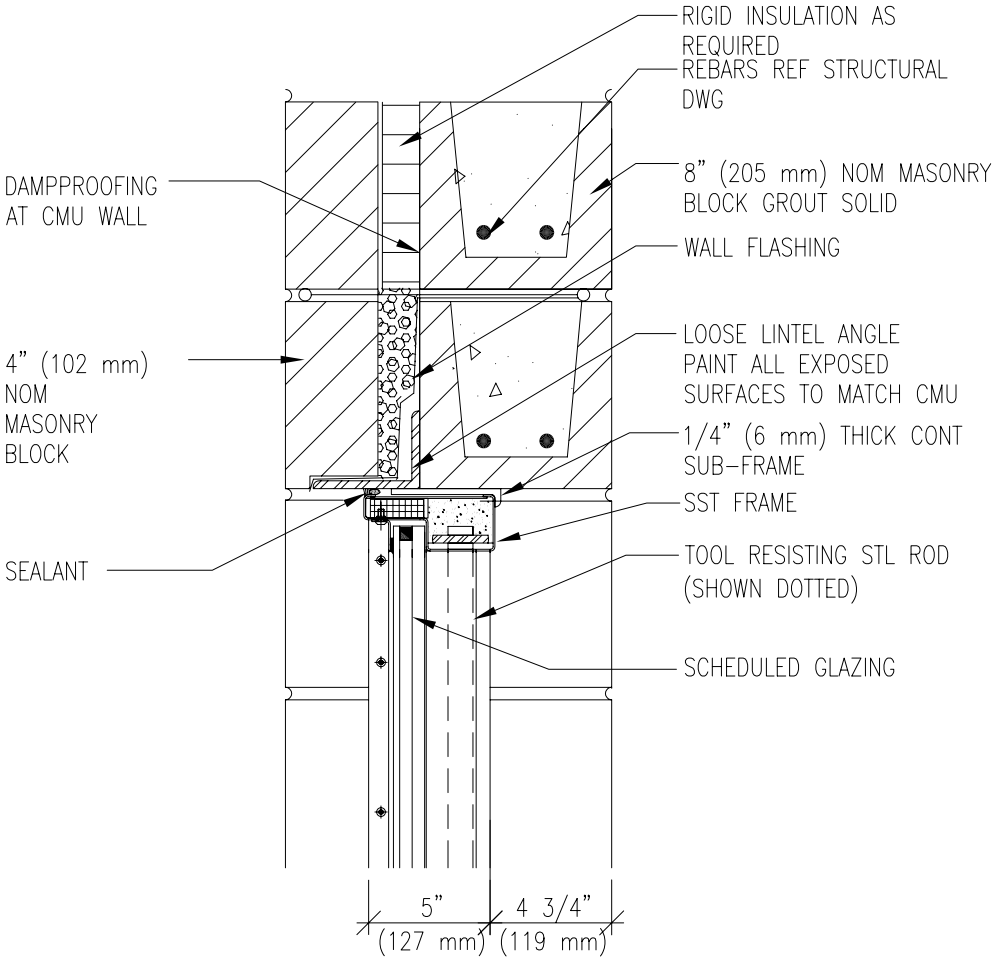

TYPICAL CELL WINDOW HEAD DETAIL AT CMU

DETENTION CONSTRUCTION STANDARDS **SERVICE PROCESSING CENTER**

U.S. Immigration and Customs Enforcement

REF NUMBER: 08-101

DATE: 08 OCTOBER 2004

SCALE: 1 1/2" = 1'-0"

TITLE: CELL WINDOW HEAD DETAIL AT CMU

NUMBER **08-102**

File: 08-102.dwg

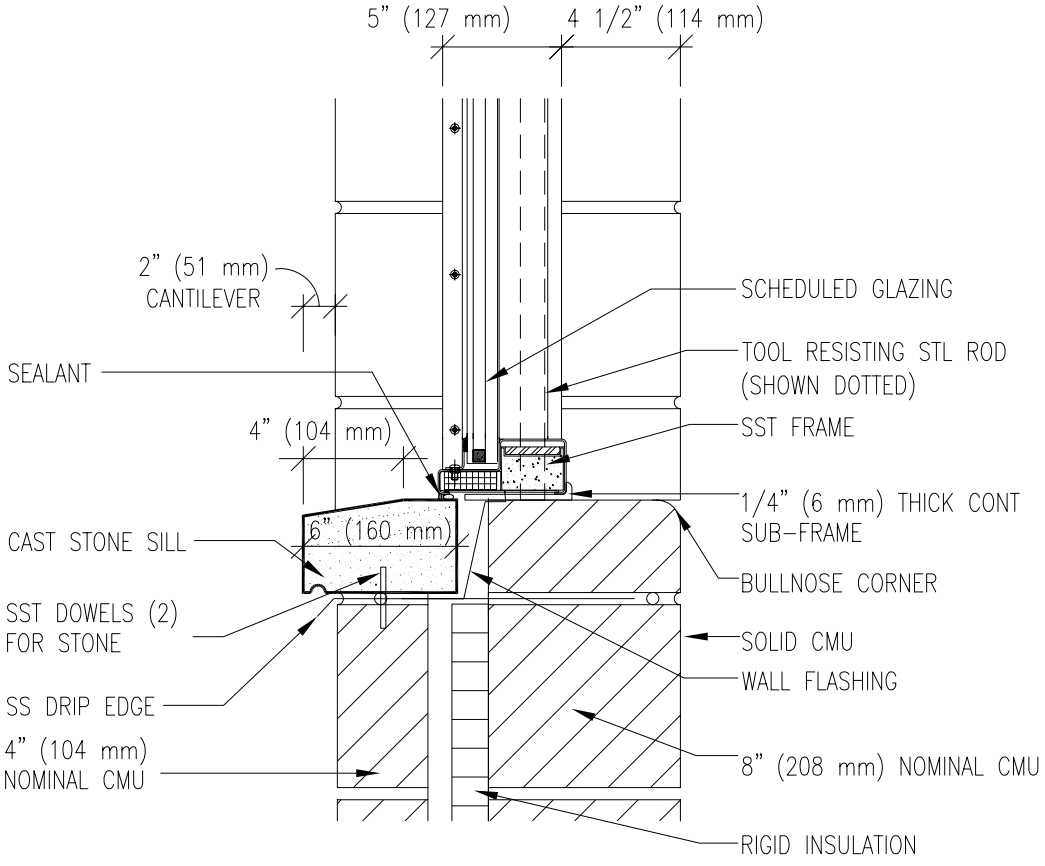

TYPICAL CELL WINDOW SILL DETAIL AT CMU

DETENTION CONSTRUCTION STANDARDS			SERVICE PROCESSING CENTER
U.S. Immigration and Customs Enforcement	**REF NUMBER:** 08-102	**TITLE:** CELL WINDOW SILL DETAIL AT CMU WALL	**NUMBER** 08-103
	DATE: 08 OCTOBER 2004		File: 08-103.dwg
	SCALE: 1 1/2" = 1'-0"		

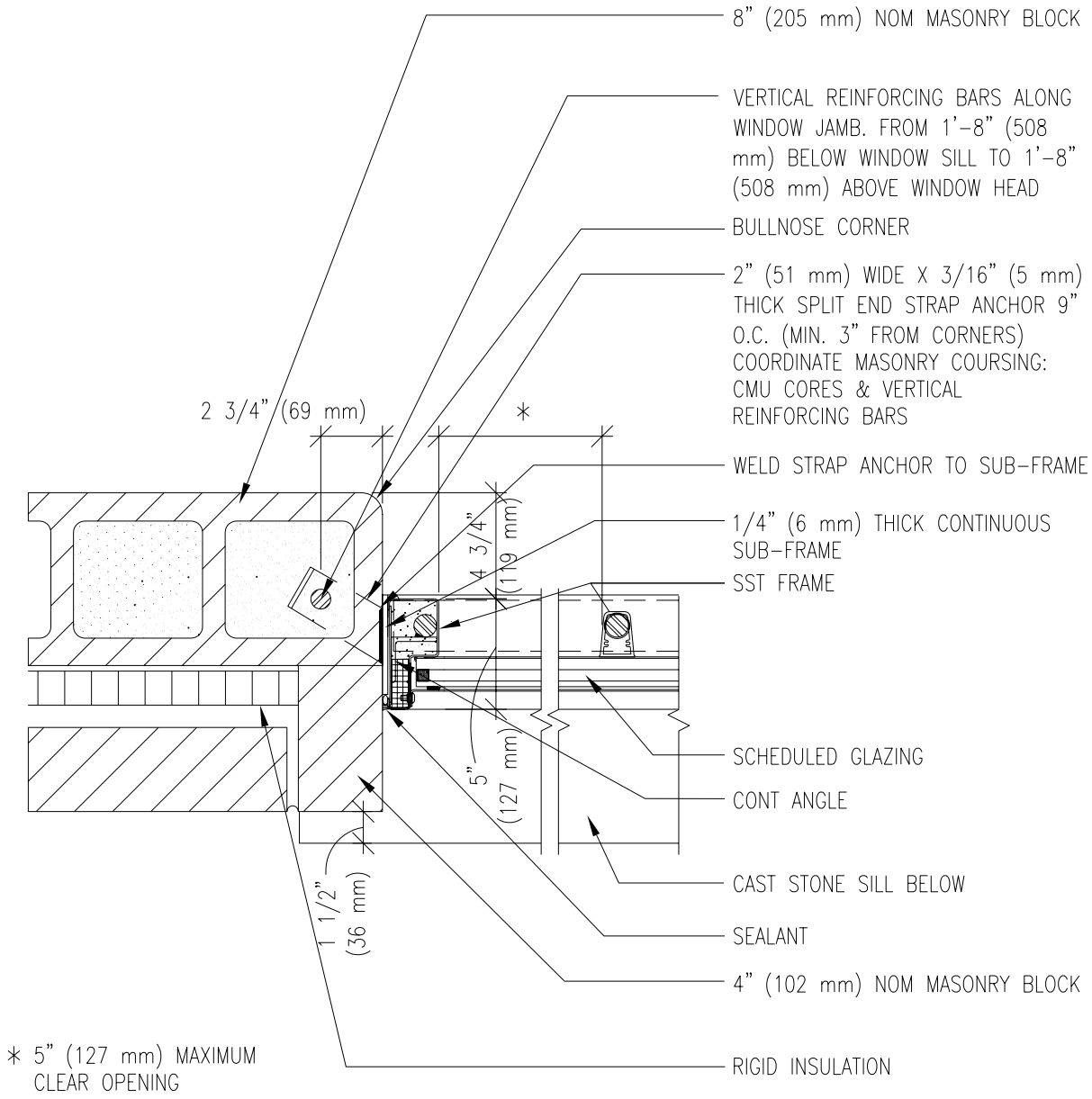

TYPICAL CELL WINDOW JAMB DETAIL AT CMU

DETENTION CONSTRUCTION STANDARDS **SERVICE PROCESSING CENTER**

U.S. Immigration and Customs Enforcement

REF NUMBER: 08-101	**TITLE:** CELL WINDOW JAMB DETAIL AT CMU	**NUMBER** **08-104**
DATE: 08 OCTOBER 2004		File: 08-104.dwg
SCALE: 1 1/2" = 1'-0"		

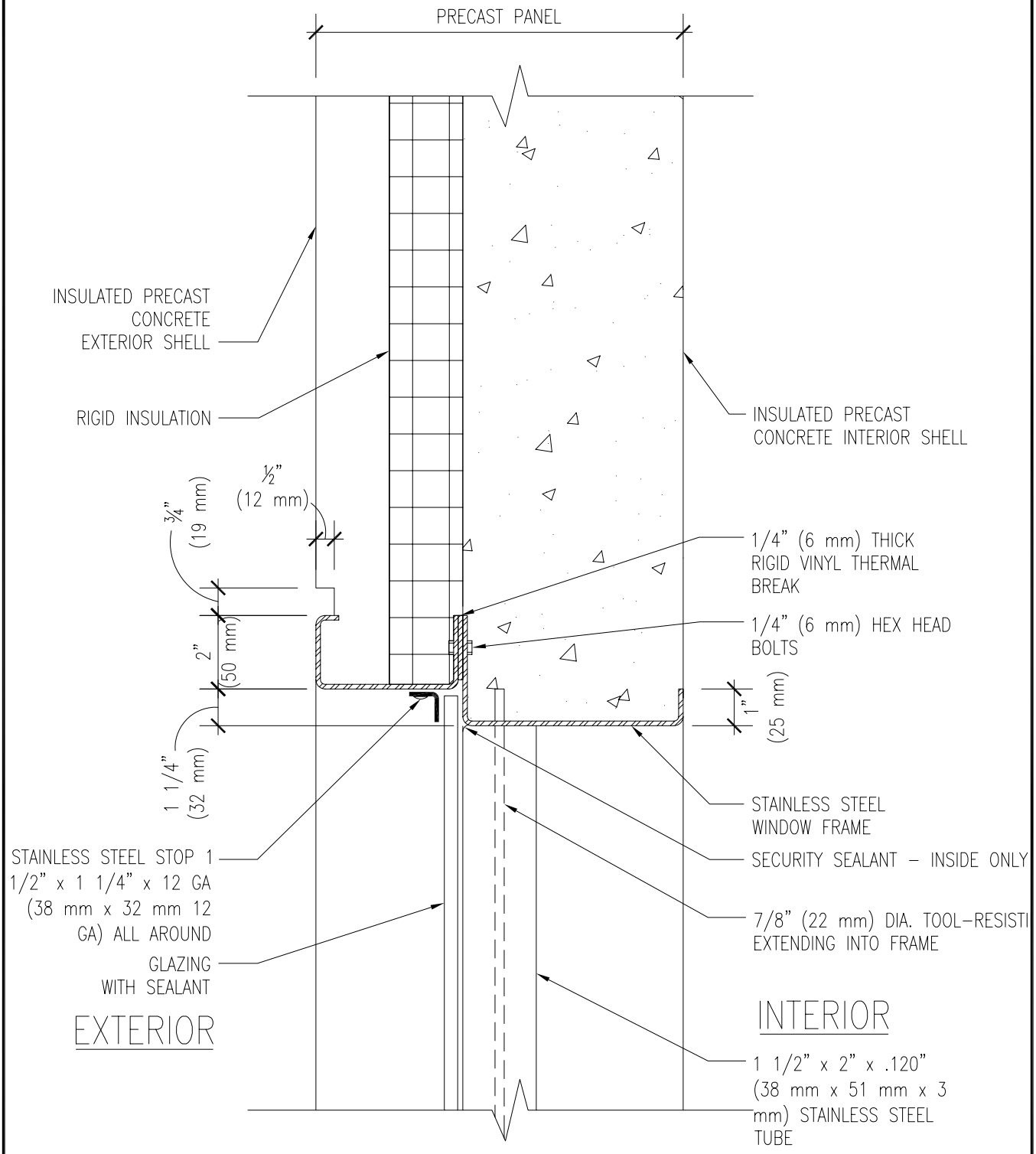

CELL WINDOW HEAD DETAIL AT PRECAST WALL

DETENTION CONSTRUCTION STANDARDS			SERVICE PROCESSING CENTER
U.S. Immigration and Customs Enforcement	**REF NUMBER:** 08-101	**TITLE:** CELL WINDOW HEAD DETAIL AT PRECAST WALL	**NUMBER** 08-105
	DATE: 08 OCTOBER 2004		File: 08-105.dwg
	SCALE: 3" = 1'-0"		

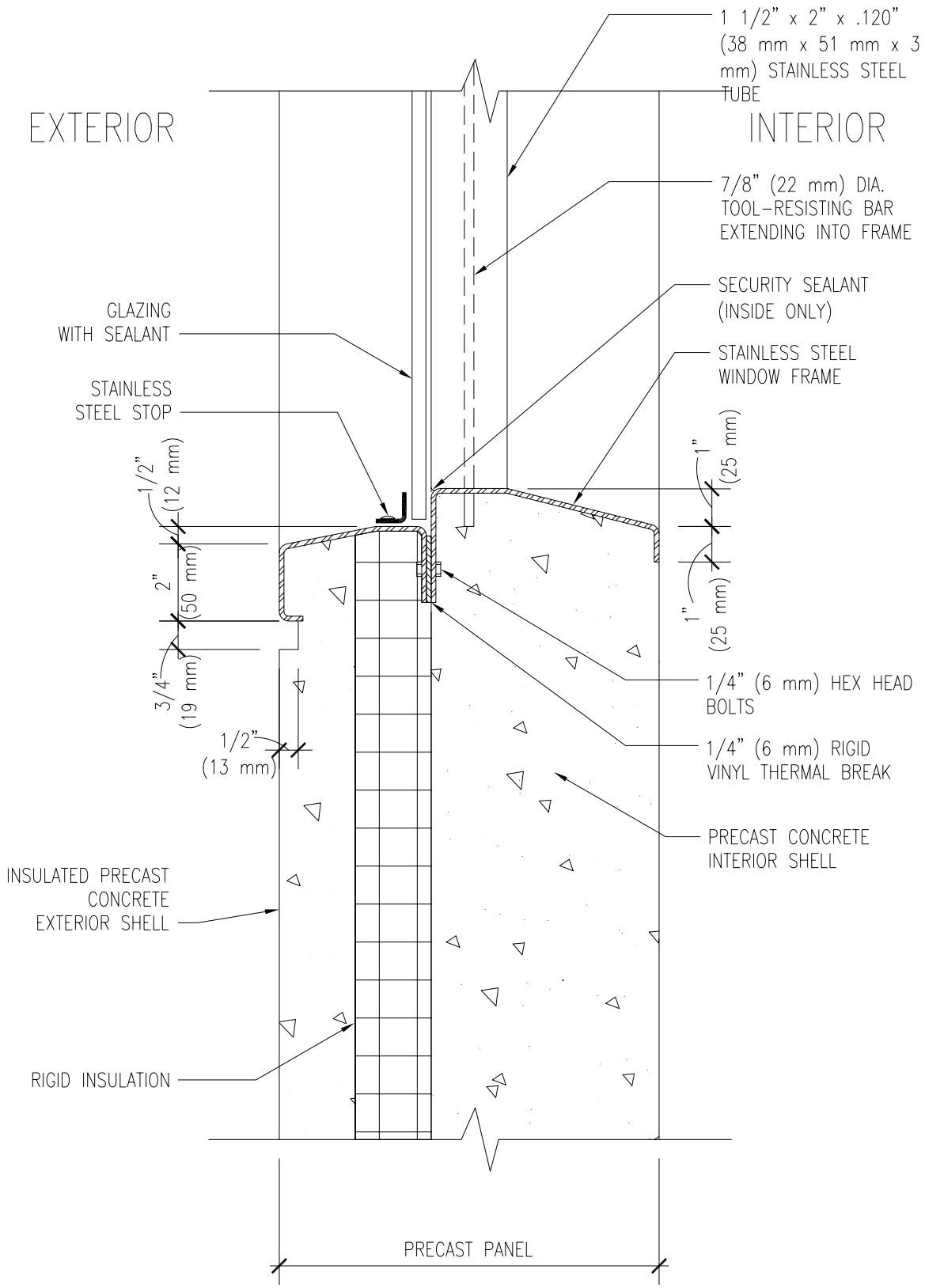

CELL WINDOW SILL DETAIL AT PRECAST

DETENTION CONSTRUCTION STANDARDS | **SERVICE PROCESSING CENTER**

U.S. Immigration and Customs Enforcement

REF NUMBER: 08-101	**TITLE:** CELL WINDOW SILL DETAIL AT PRECAST	**NUMBER** 08-106
DATE: 08 OCTOBER 2004		File: 08-106.dwg
SCALE: 3" = 1'-0"		

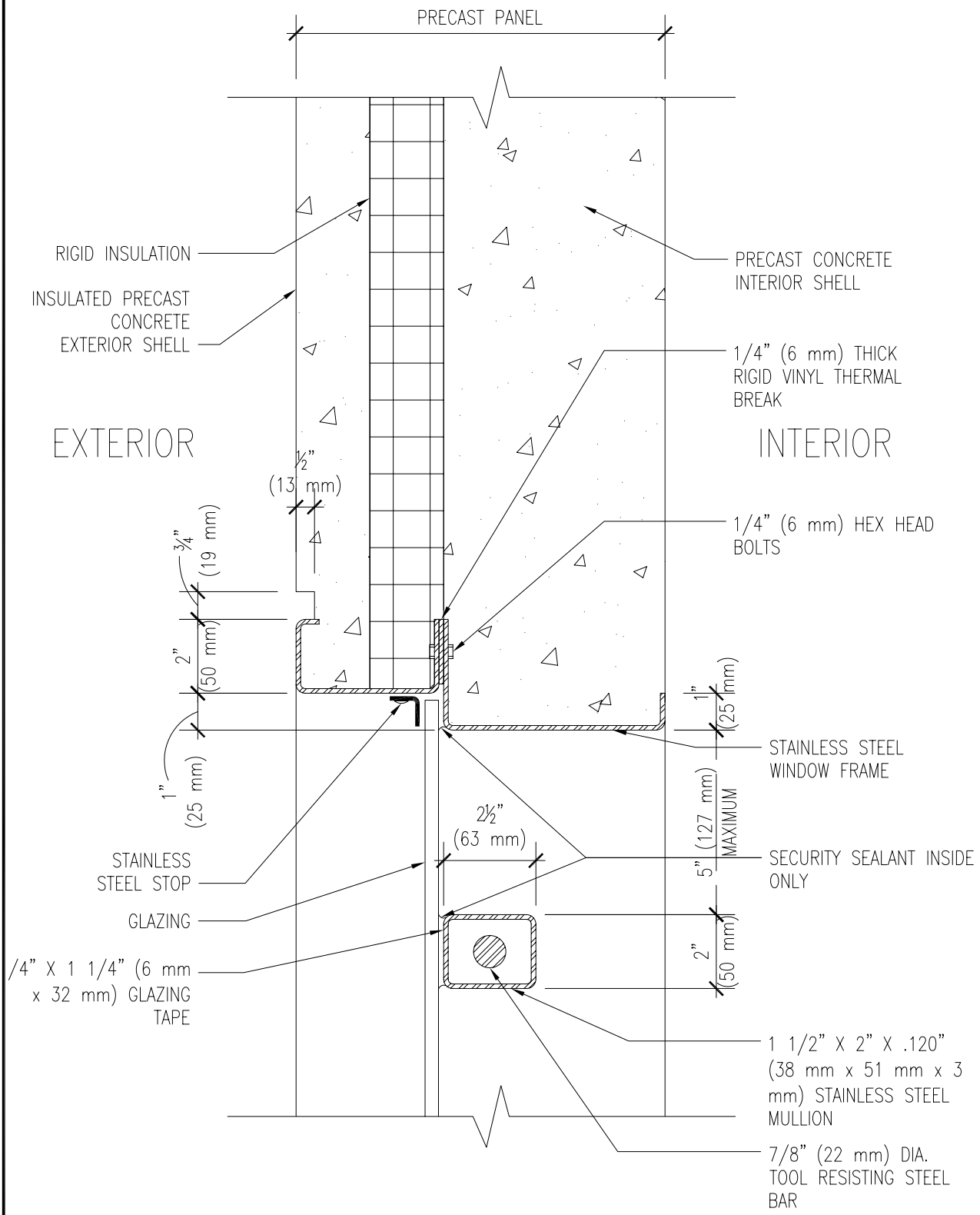

CELL WINDOW JAMB DETAIL AT PRECAST

DETENTION CONSTRUCTION STANDARDS **SERVICE PROCESSING CENTER**

U.S. Immigration and Customs Enforcement

REF NUMBER: 08-101	**TITLE:** CELL WINDOW JAMB DETAIL AT PRECAST	**NUMBER** 08-107
DATE: 08 OCTOBER 2004		File: 08-107.dwg
SCALE: 3" = 1'-0"		

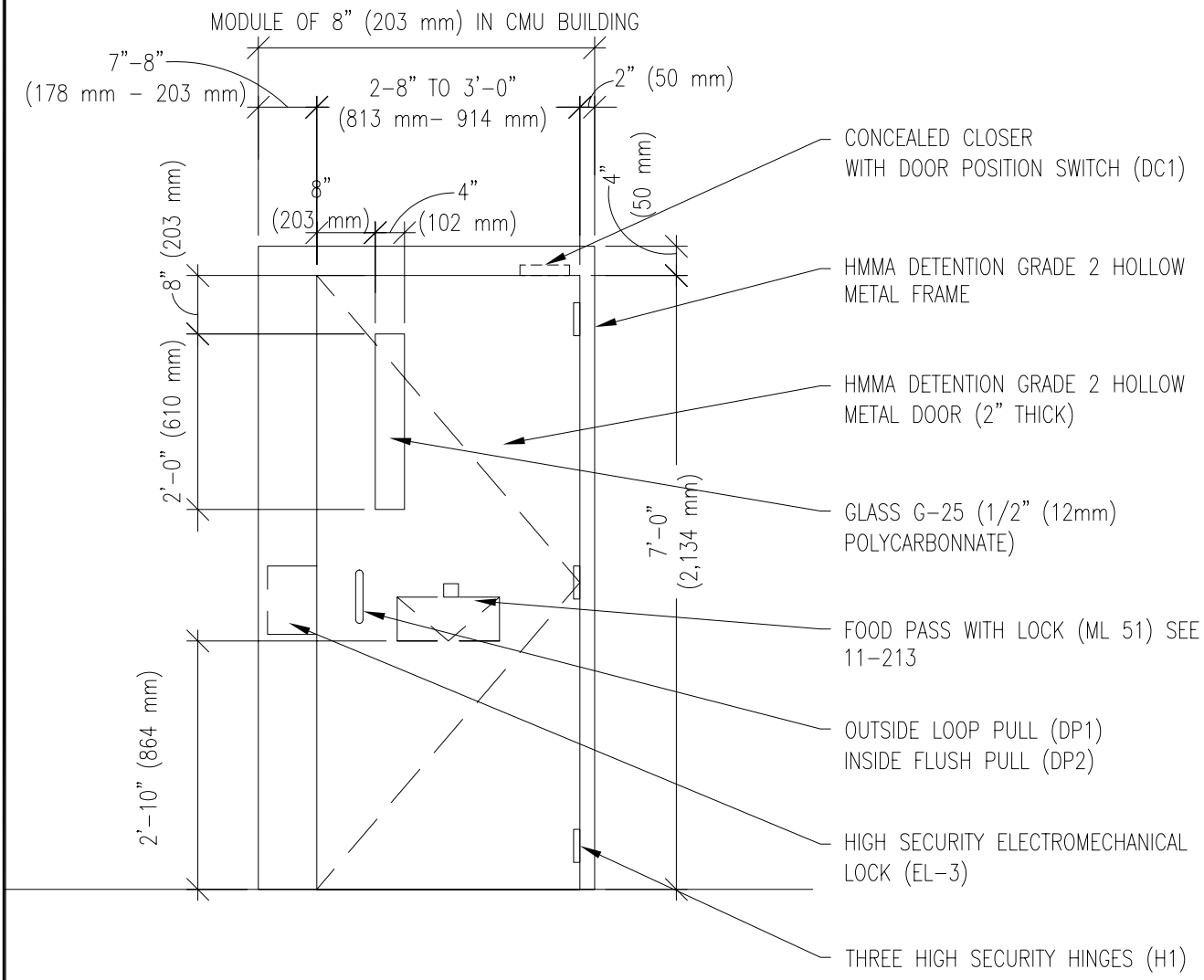

TYPICAL HIGH AND MEDIUM SECURITY CELL DOOR

DETENTION CONSTRUCTION STANDARDS			SERVICE PROCESSING CENTER
U.S. Immigration and Customs Enforcement	**REF NUMBER:**	**TITLE:** TYPICAL HIGH AND MEDIUM SECURITY CELL DOOR	**NUMBER** 11-101
	DATE: 08 OCTOBER 2004		File: 11-101.dwg
	SCALE: 1/2" = 1'-0"		

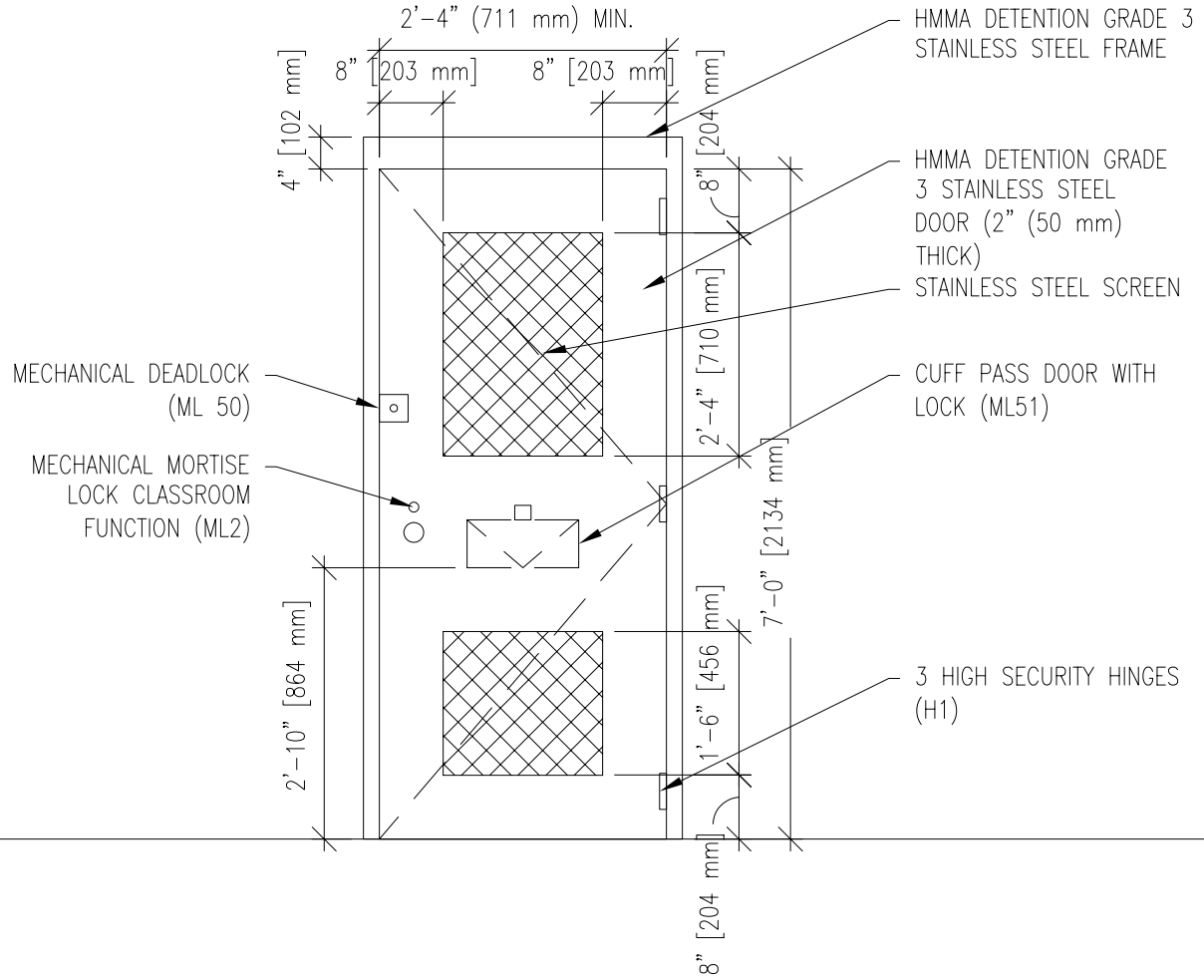

TYPICAL SEGREGATION SHOWER DOOR

DETENTION CONSTRUCTION STANDARDS **SERVICE PROCESSING CENTER**

U.S. Immigration and Customs Enforcement

REF NUMBER:	TITLE:	NUMBER
DATE: 08 OCTOBER 2004	TYPICAL SEGREGATION SHOWER DOOR	11-102
SCALE: 1/2" = 1'-0"		File: 11-102.dwg

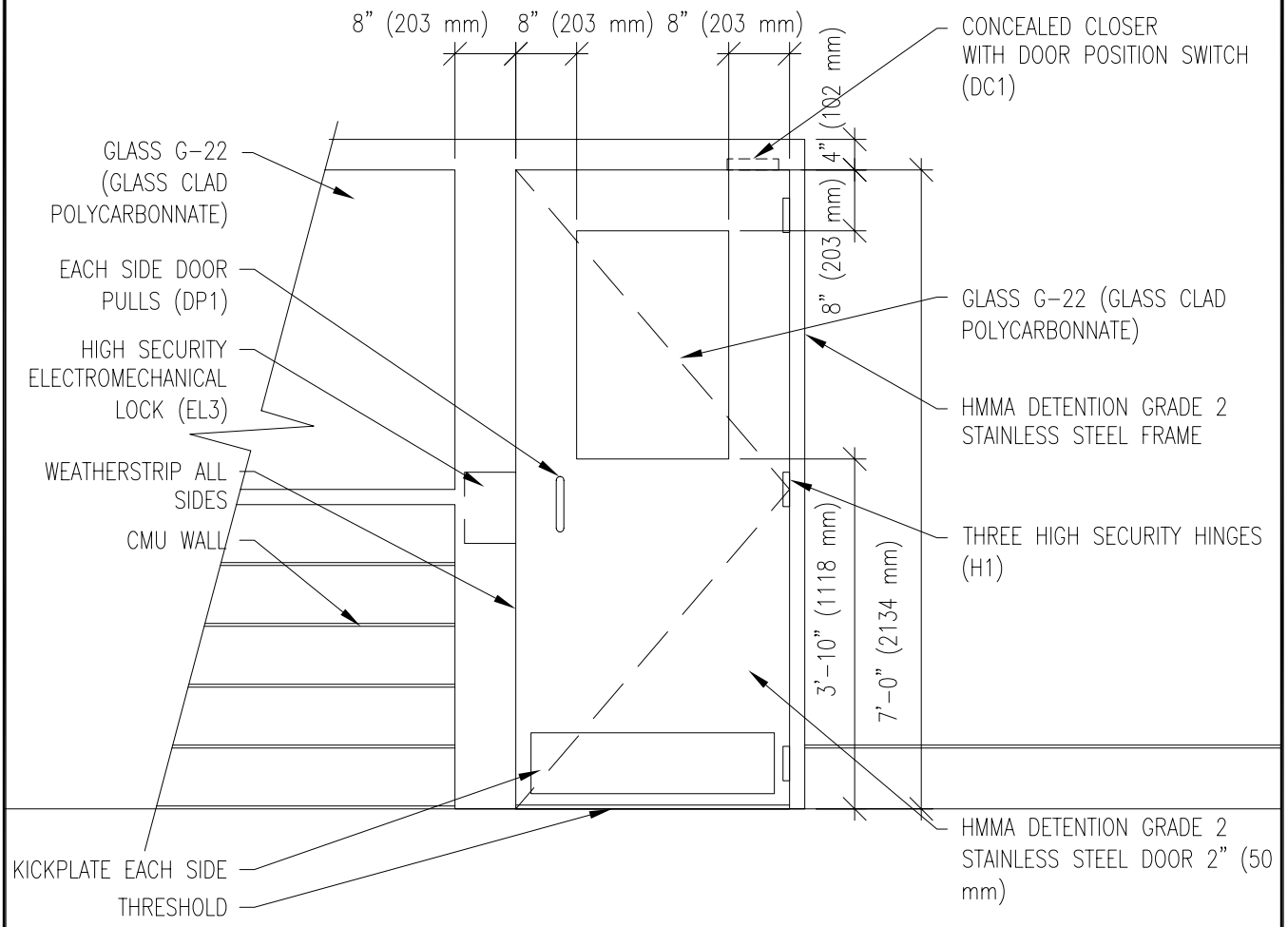

TYPICAL EXTERIOR RECREATION DOOR

DETENTION CONSTRUCTION STANDARDS			SERVICE PROCESSING CENTER
U.S. Immigration and Customs Enforcement	**REF NUMBER:**	**TITLE:** TYPICAL EXTERIOR RECREATION DOOR	**NUMBER** 11-103
	DATE: 08 OCTOBER 2004		
	SCALE: 1/2" = 1'-0"		File: 11-103.dwg

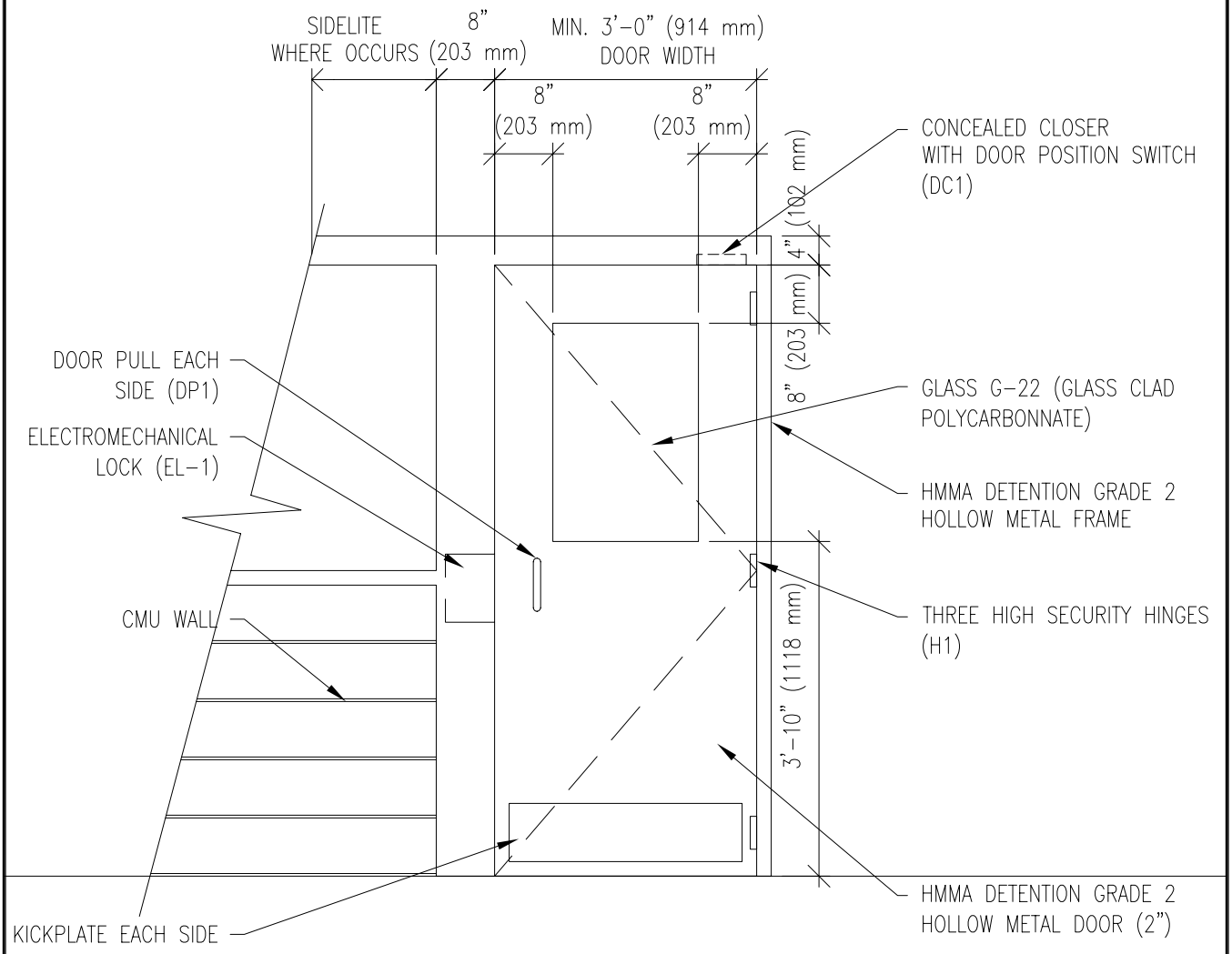

TYPICAL HIGH AND MEDIUM SECURITY SALLYPORT

DETENTION CONSTRUCTION STANDARDS			SERVICE PROCESSING CENTER
U.S. Immigration and Customs Enforcement	**REF NUMBER:**	**TITLE:** TYPICAL HIGH & MEDIUM SECURITY SALLYPORT	**NUMBER** 11-104
	DATE: 08 OCTOBER 2004		
	SCALE: 1/2" = 1'-0"		File: 11-104.dwg

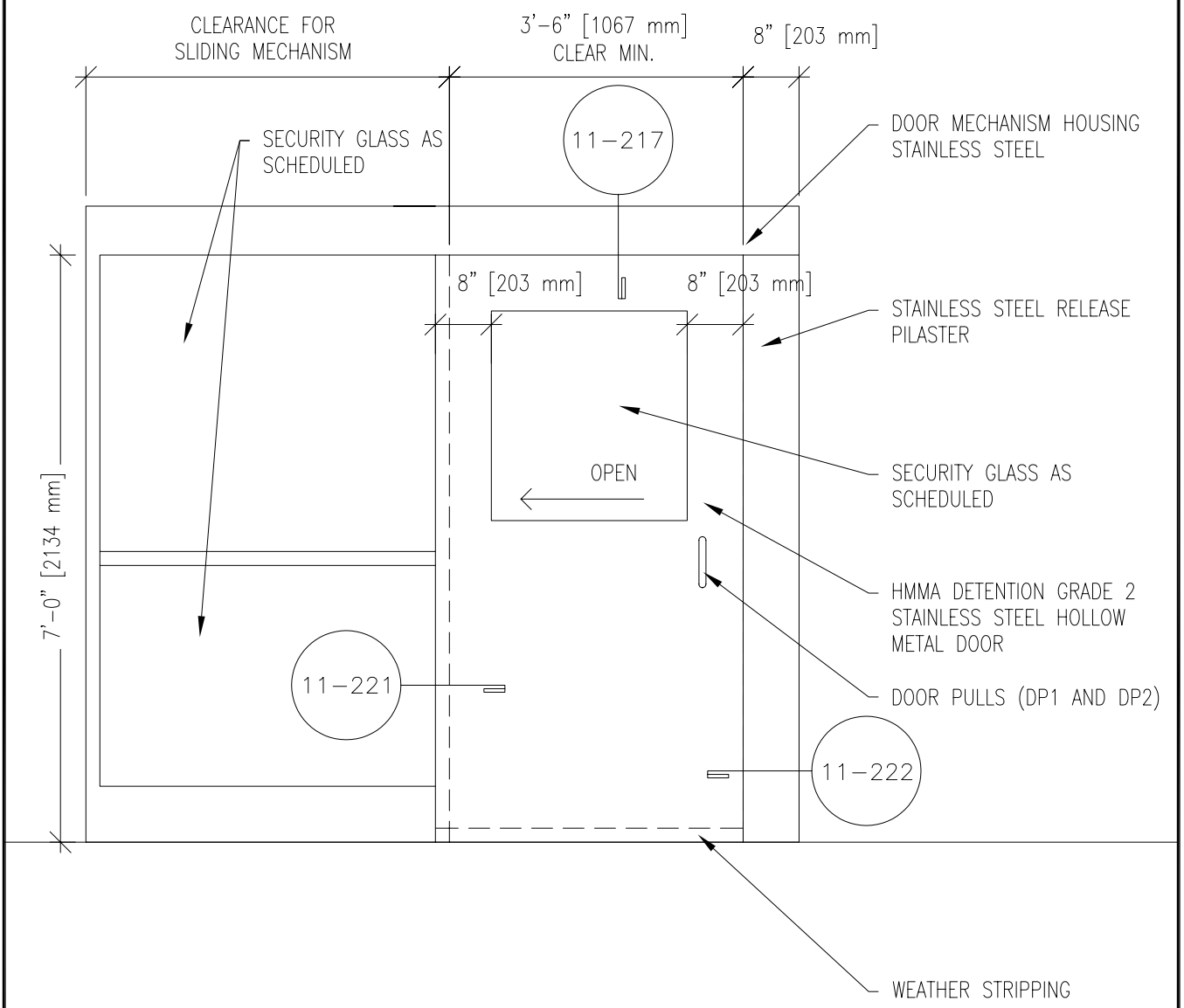

TYPICAL SLIDING DETENTION DOOR AT EXTERIOR

DETENTION CONSTRUCTION STANDARDS			SERVICE PROCESSING CENTER
U.S. Immigration and Customs Enforcement	**REF NUMBER:**	**TITLE:** TYPICAL SLIDING DETENTION DOOR AT EXTERIOR	**NUMBER** 11-105
	DATE: 08 OCTOBER 2004		File: 11-105.dwg
	SCALE: 1/2" = 1'-0"		

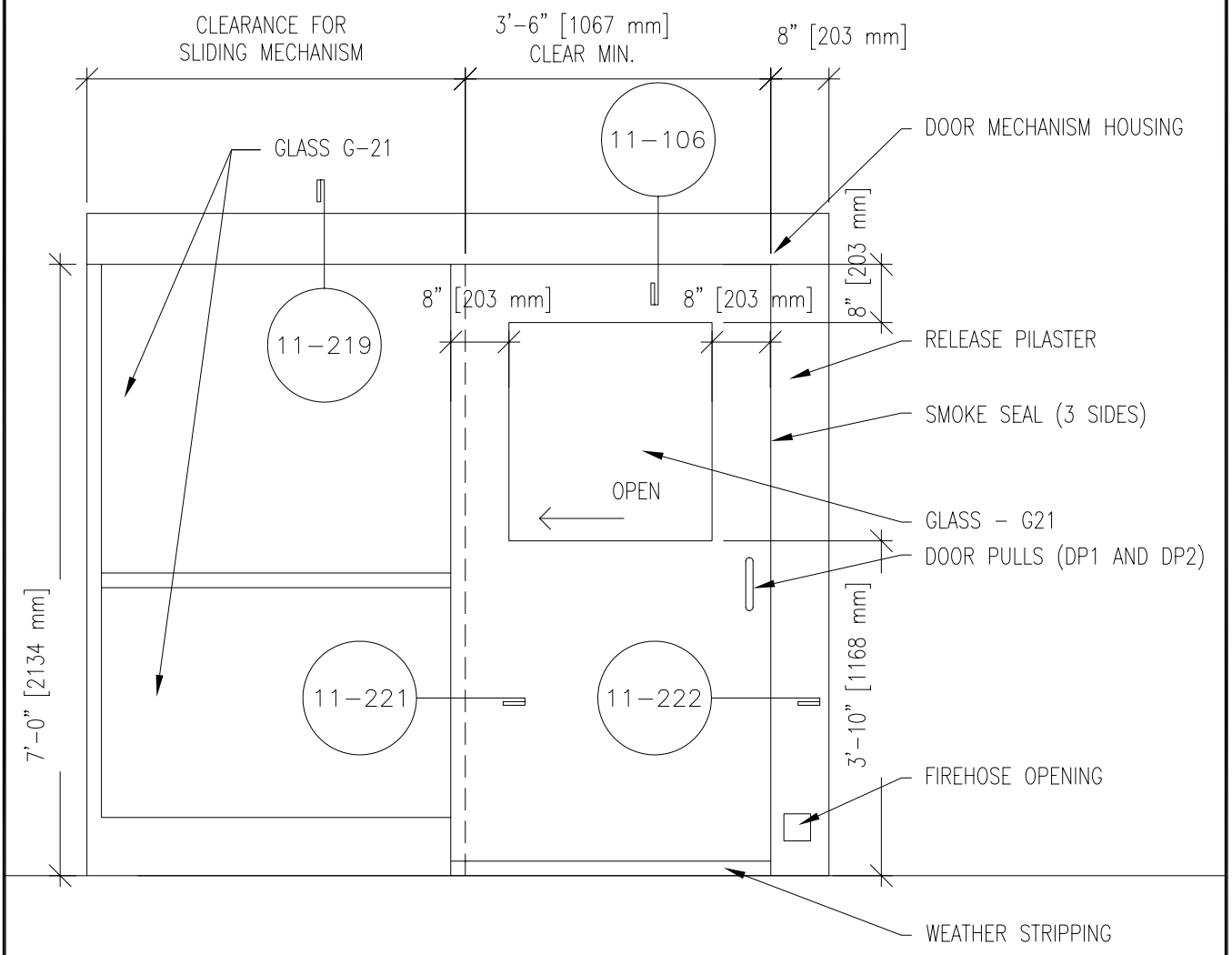

TYPICAL SLIDING DETENTION DOOR AT CORRIDOR TO DAYROOM

DETENTION CONSTRUCTION STANDARDS			SERVICE PROCESSING CENTER
U.S. Immigration and Customs Enforcement	**REF NUMBER:**	**TITLE:**	**NUMBER**
	DATE: 08 OCTOBER 2004	TYPICAL SLIDING DETENTION DOOR @ CORRIDOR DAYROOM	**11-106**
	SCALE: 1/2" = 1'-0"		File: 11-106.dwg

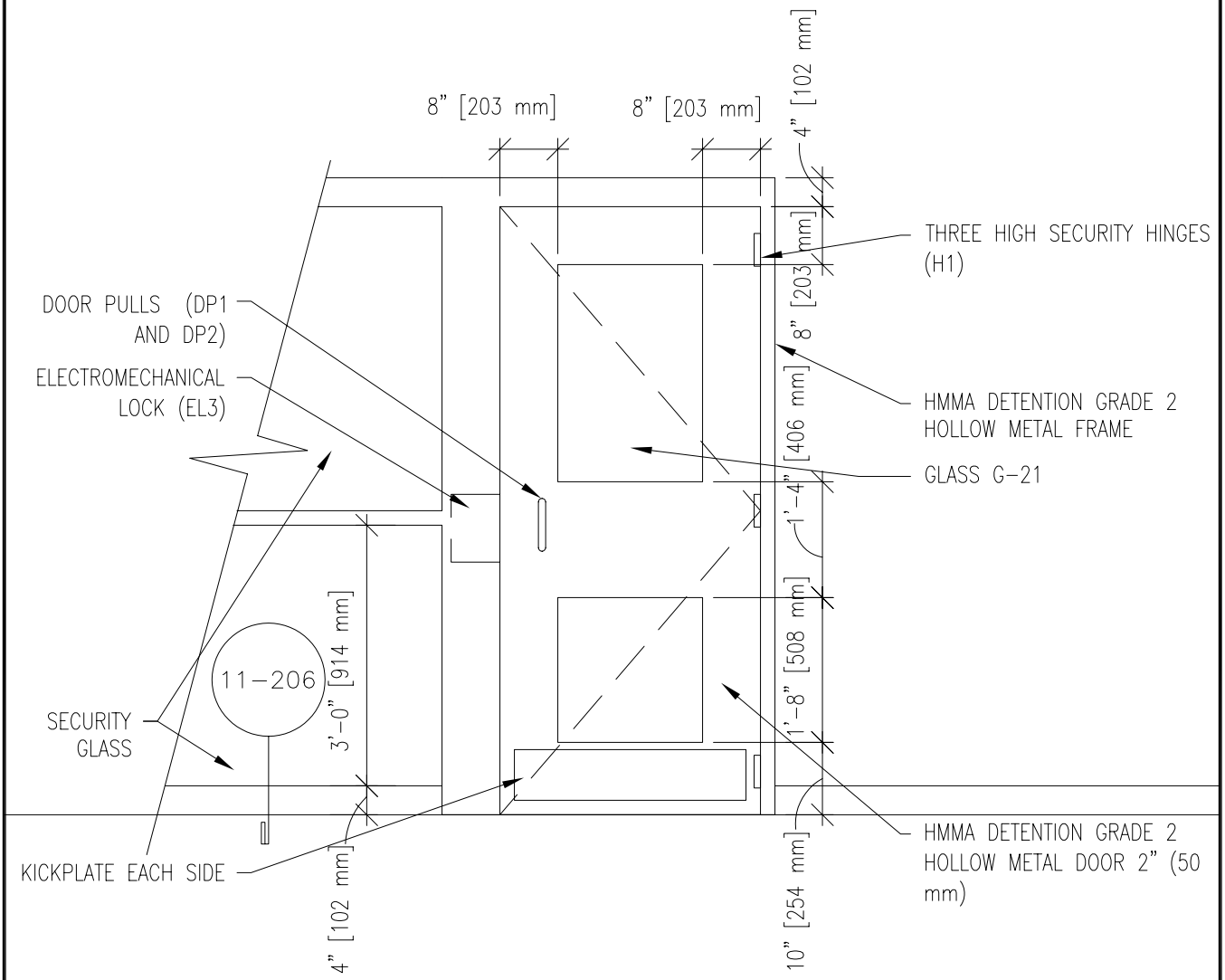

TYPICAL HOLDING ROOM DOOR (FOR HIGH VISIBILITY)

DETENTION CONSTRUCTION STANDARDS			SERVICE PROCESSING CENTER
U.S. Immigration and Customs Enforcement	**REF NUMBER:**	**TITLE:** TYPICAL HOLDING ROOM DOOR (FOR HIGH VISIBILITY)	**NUMBER** 11-107
	DATE: 08 OCTOBER 2004		File: 11-107.dwg
	SCALE: 1/2" = 1'-0"		

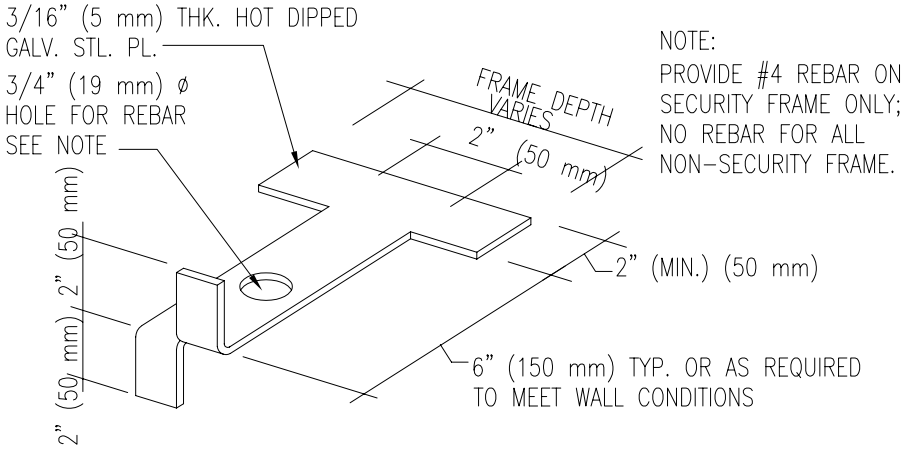

TYPICAL DETENTION FRAME ANCHOR AT MASONRY

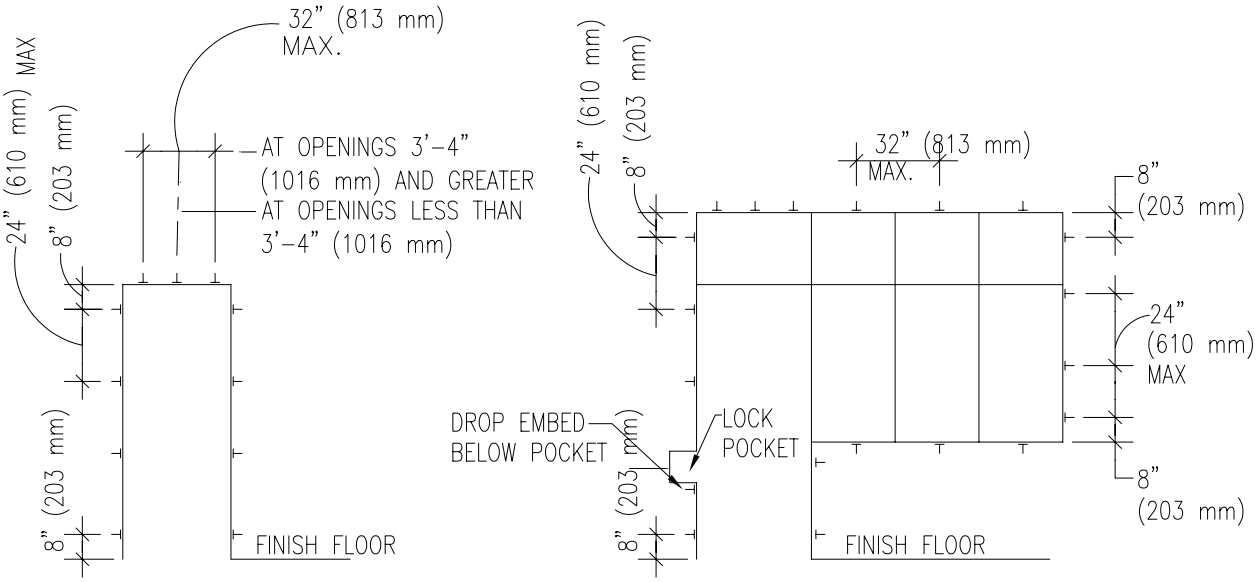

FRAME ANCHOR DETAILS

DETENTION CONSTRUCTION STANDARDS		SERVICE PROCESSING CENTER	
U.S. Immigration and Customs Enforcement	**REF NUMBER:**	**TITLE:** DETENTION HOLLOW METAL FRAME DETAILS	**NUMBER** 11-201
	DATE: 08 OCTOBER 2004		File: 11-201.dwg
	SCALE: 3" = 1'-0"		

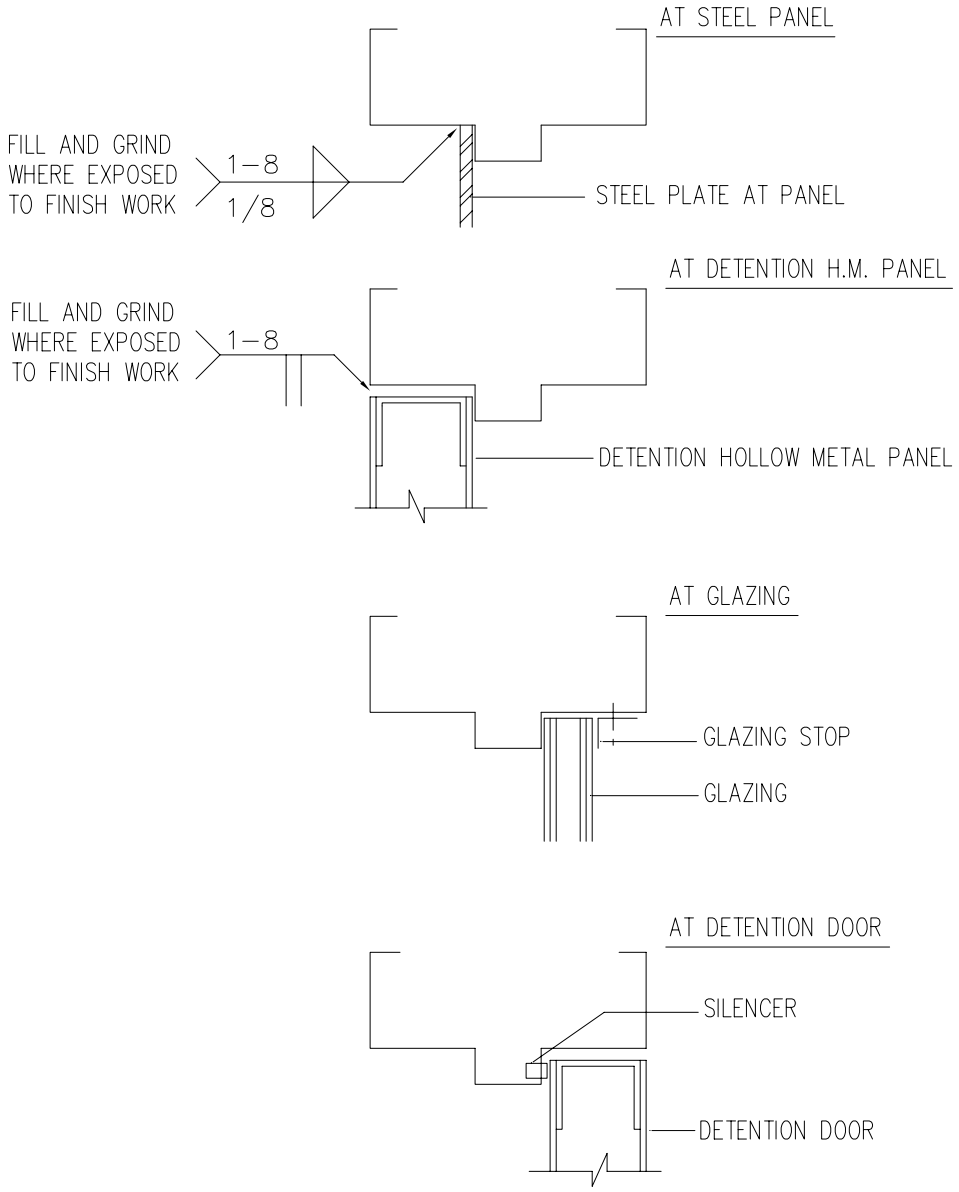

DHM FRAME INFILL CONDITIONS

DETENTION CONSTRUCTION STANDARDS			SERVICE PROCESSING CENTER
U.S. Immigration and Customs Enforcement	**REF NUMBER:**	**TITLE:** DETENTION HOLLOW METAL FRAME INFILL CONDITIONS	**NUMBER** 11-202
	DATE: 08 OCTOBER 2004		File: 11-202.dwg
	SCALE: 3" = 1'-0"		

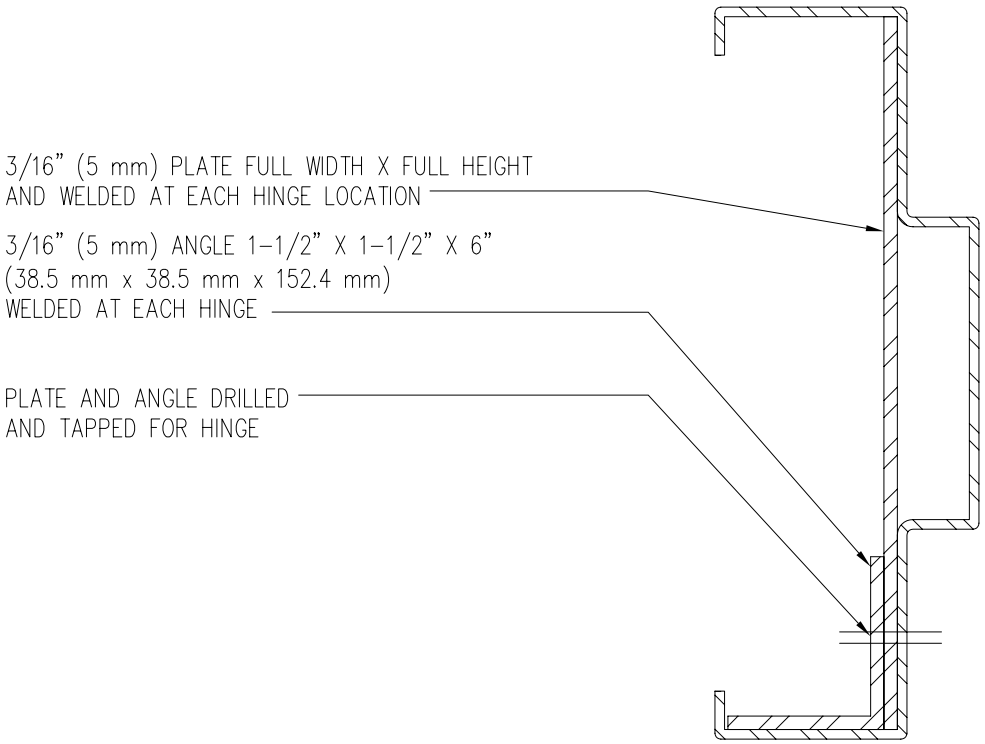

HINGE REINF. AT DHM FRAME JAMB (TYP.)

DETENTION CONSTRUCTION STANDARDS			SERVICE PROCESSING CENTER
U.S. Immigration and Customs Enforcement	**REF NUMBER:**	**TITLE:** DETENTION HOLLOW METAL FRAME HINGE REINFORCING	**NUMBER** 11-203
	DATE: 08 OCTOBER 2004		File: 11-203.dwg
	SCALE: 3" = 1'-0"		

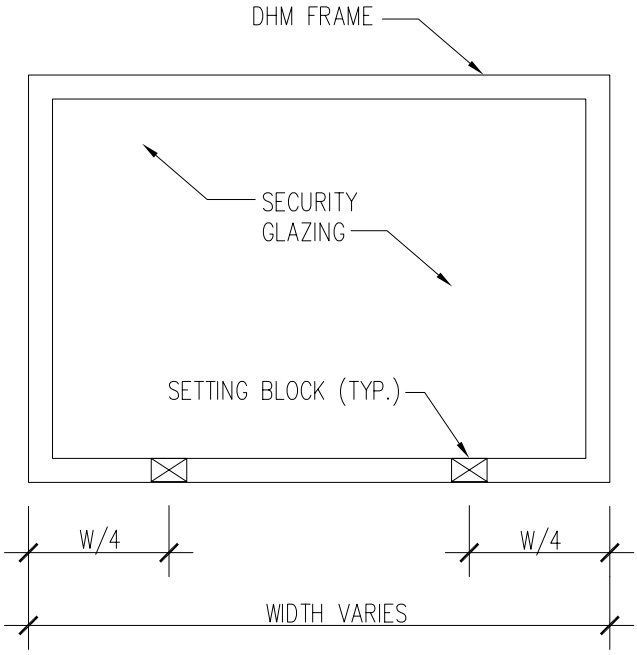

FRONT VIEW OF SETTING BLOCK LOCATION

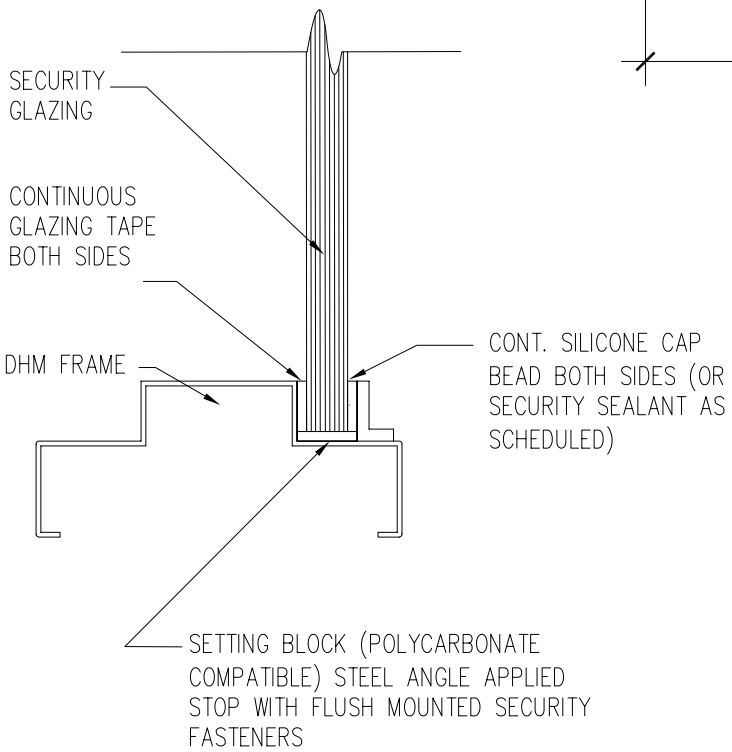

DHM FRAME GLAZING

DETENTION CONSTRUCTION STANDARDS			SERVICE PROCESSING CENTER
U.S. Immigration and Customs Enforcement	**REF NUMBER:**	**TITLE:** DETENTION HOLLOW METAL FRAME GLAZING	**NUMBER** 11-204
	DATE: 08 OCTOBER 2004		
	SCALE: 3" = 1'-0"		File: 11-204.dwg

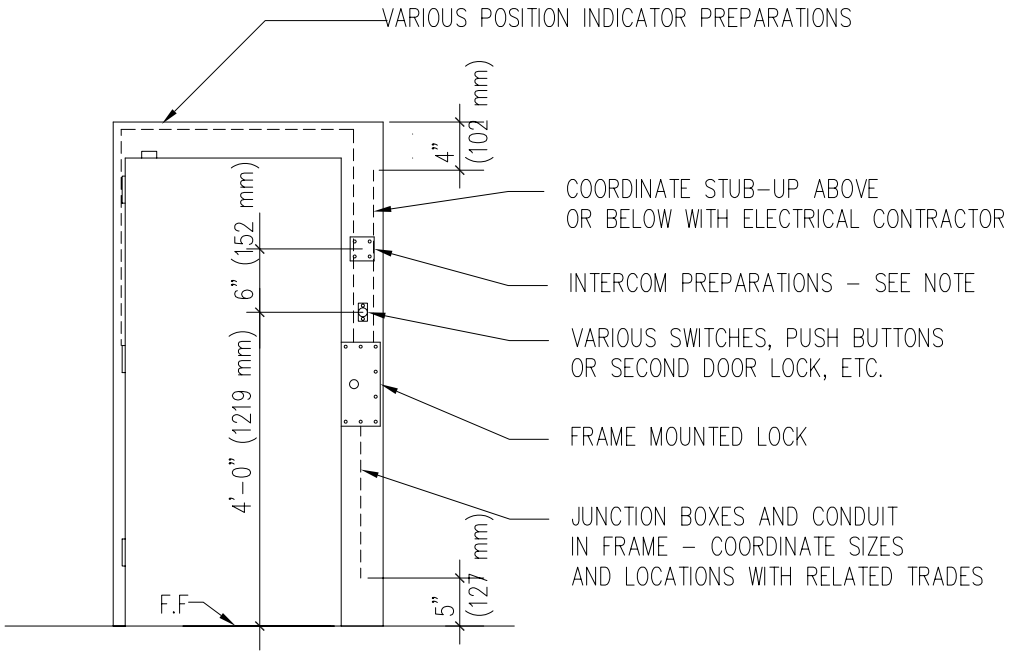

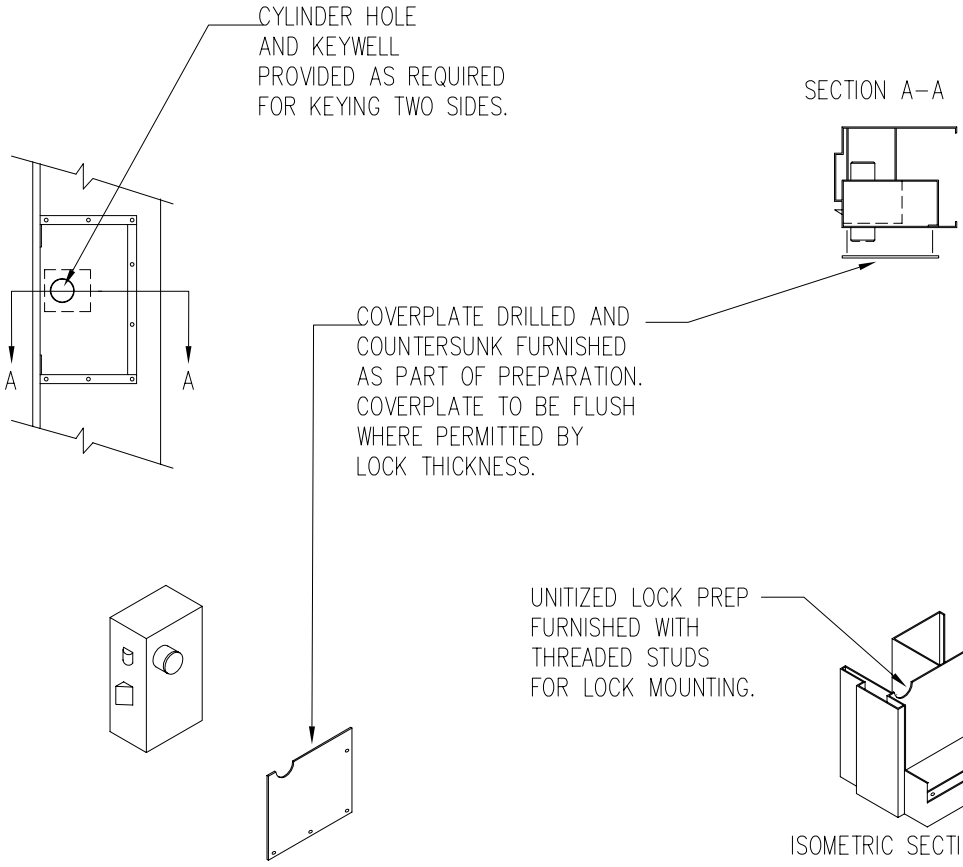

FRAME DETAILS

DETENTION CONSTRUCTION STANDARDS			SERVICE PROCESSING CENTER
U.S. Immigration and Customs Enforcement	**REF NUMBER:**	**TITLE:** DETENTION HOLLOW METAL FRAME DETAILS	**NUMBER** 11-205
	DATE: 08 OCTOBER 2004		
	SCALE: 3" = 1'-0"		File: 11-205.dwg

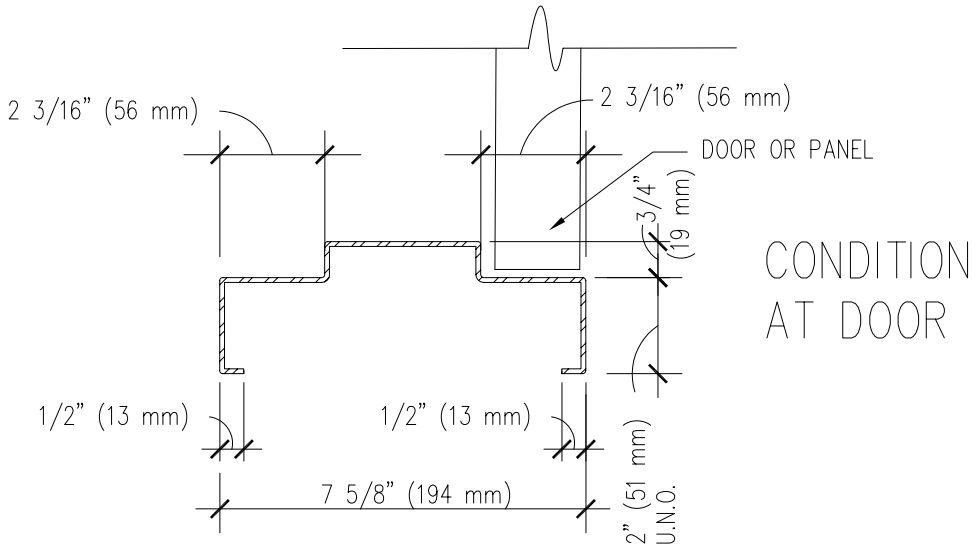

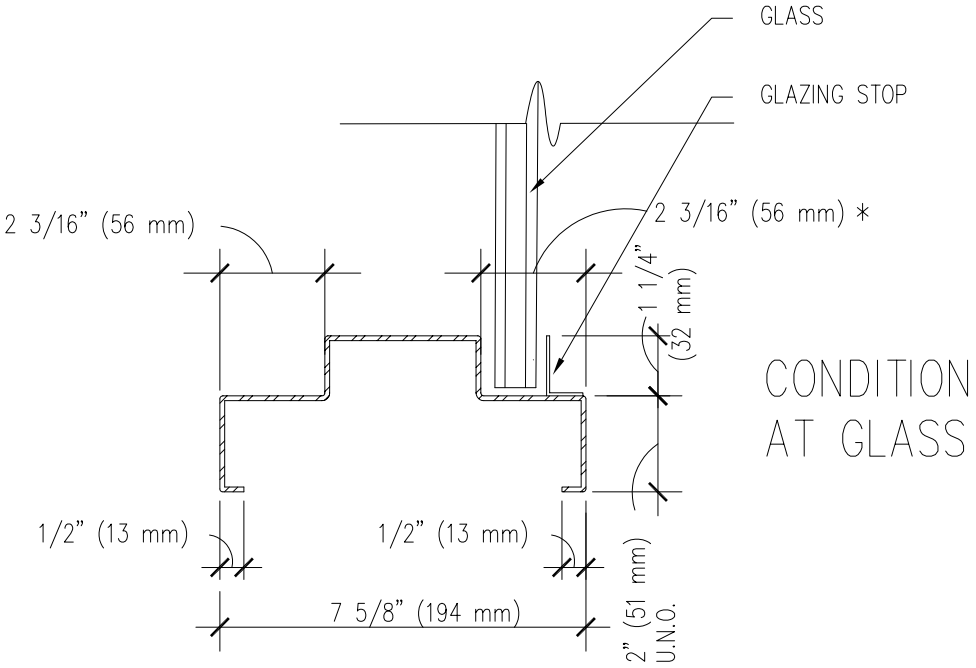

* DIMENSIONS MUST BE SUFFICIENT TO ACCOMMODATE GLAZING STOP AND GLASS SETTING

TYPICAL DHM PROFILES

DETENTION CONSTRUCTION STANDARDS			SERVICE PROCESSING CENTER
U.S. Immigration and Customs Enforcement	**REF NUMBER:**	**TITLE:** TYPICAL DETENTION HOLLOW METAL FRAME PROFILES	**NUMBER** 11-206
	DATE: 08 OCTOBER 2004		
	SCALE: 3" = 1'-0"		File: 11-206.dwg

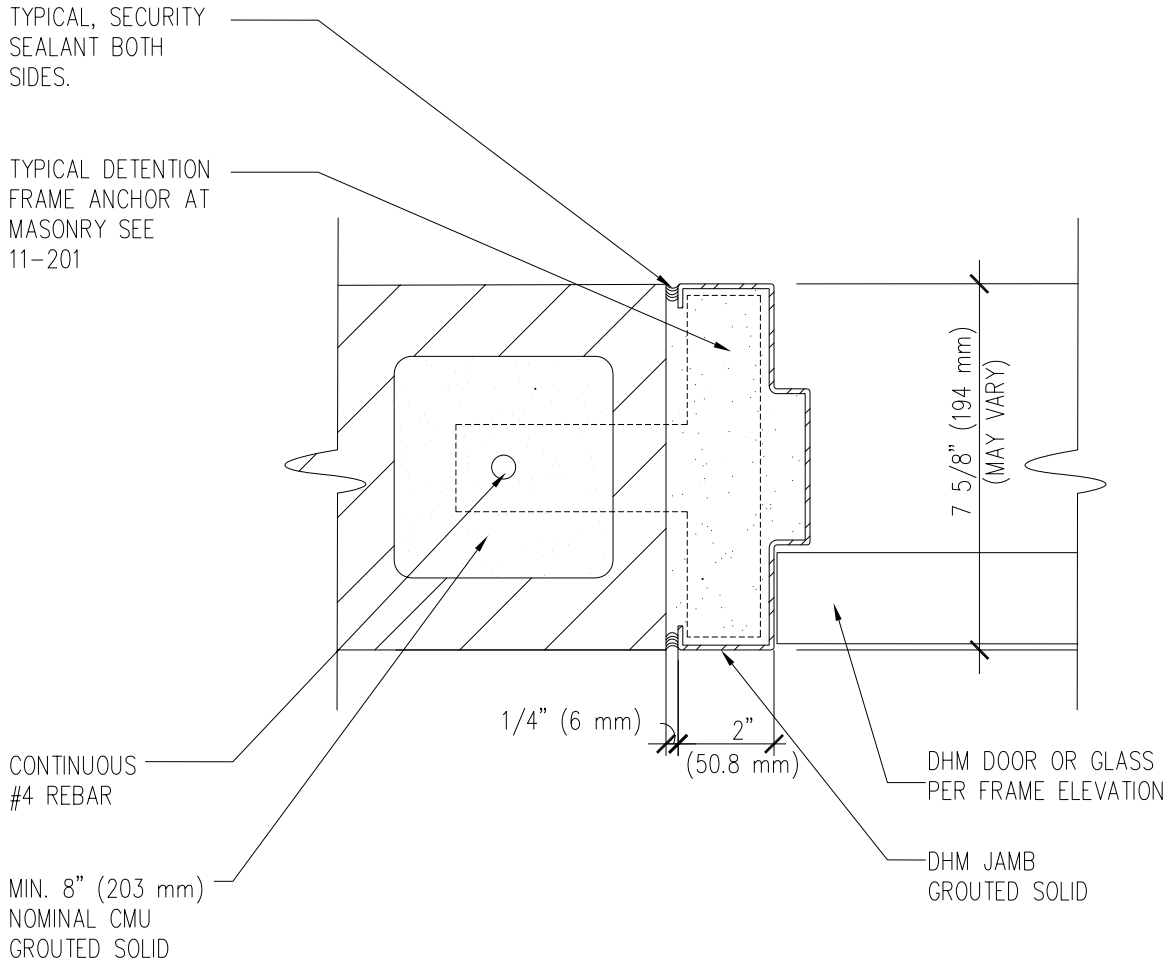

DHM JAMB AT CMU

DETENTION CONSTRUCTION STANDARDS			SERVICE PROCESSING CENTER
U.S. Immigration and Customs Enforcement	**REF NUMBER:**	**TITLE:** DETENTION HOLLOW METAL JAMB AT CMU	**NUMBER** 11-207
	DATE: 08 OCTOBER 2004		
	SCALE: 3" = 1'-0"		File: 11-207.dwg

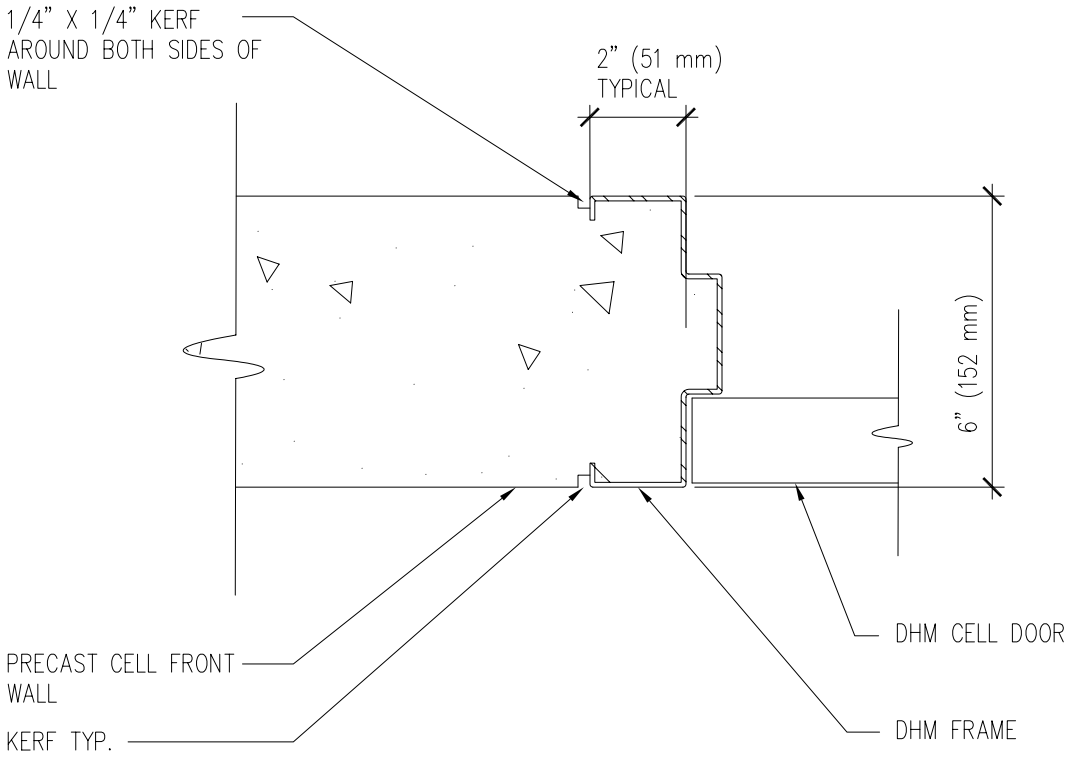

DHM CELL DOOR JAMB AT PRECAST
(HEAD SIMILAR)

DETENTION CONSTRUCTION STANDARDS			SERVICE PROCESSING CENTER
U.S. Immigration and Customs Enforcement	**REF NUMBER:**	**TITLE:** DHM CELL DOOR JAMB AT PRECAST	**NUMBER** **11-208**
	DATE: 08 OCTOBER 2004		
	SCALE: 3" = 1'-0"		File: 11-208.dwg

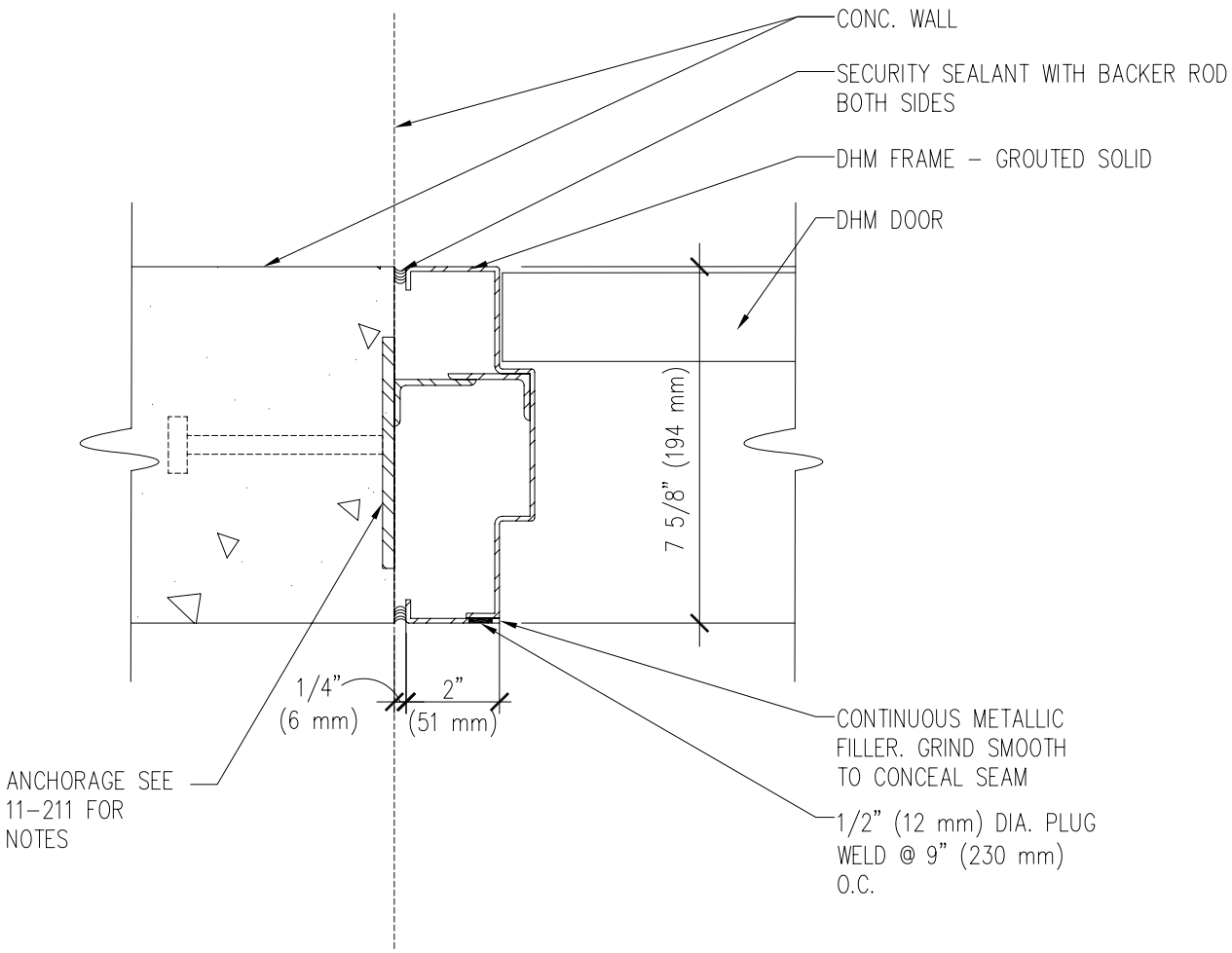

DHM JAMB AT CONCRETE WALL

DETENTION CONSTRUCTION STANDARDS			SERVICE PROCESSING CENTER
U.S. Immigration and Customs Enforcement	**REF NUMBER:**	**TITLE:** DETENTION HOLLOW METAL JAMB AT CONCRETE WALL	**NUMBER** 11-209
	DATE: 08 OCTOBER 2004		
	SCALE: 3" = 1'-0"		File: 11-209.dwg

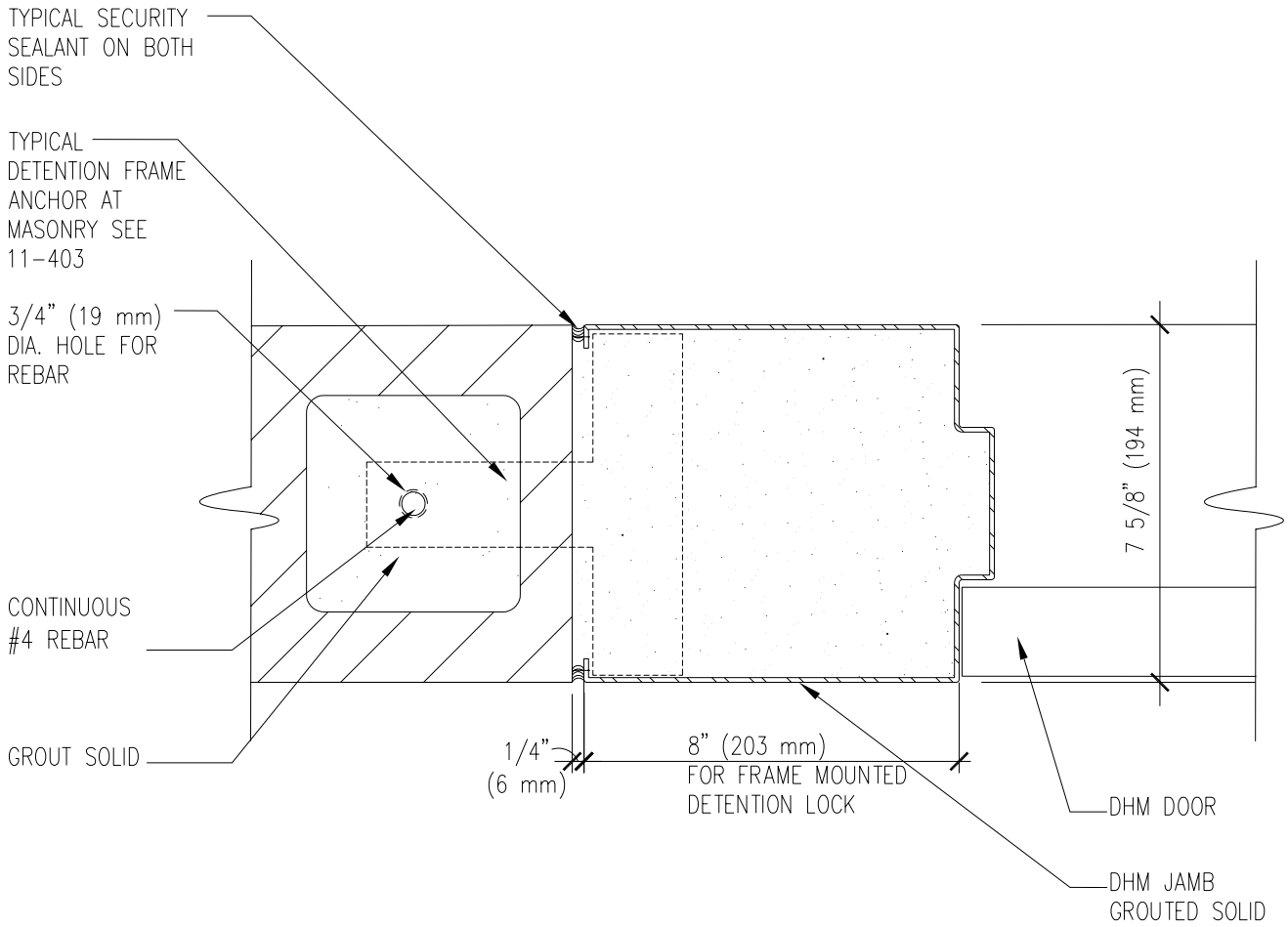

DHM JAMB AT LOCK SIDE

DETENTION CONSTRUCTION STANDARDS			SERVICE PROCESSING CENTER
U.S. Immigration and Customs Enforcement	**REF NUMBER:**	**TITLE:** DETENTION HOLLOW METAL JAMB AT LOCK SIDE	**NUMBER** 11-210
	DATE: 08 OCTOBER 2004		
	SCALE: 3" = 1'-0"		File: 11-210.dwg

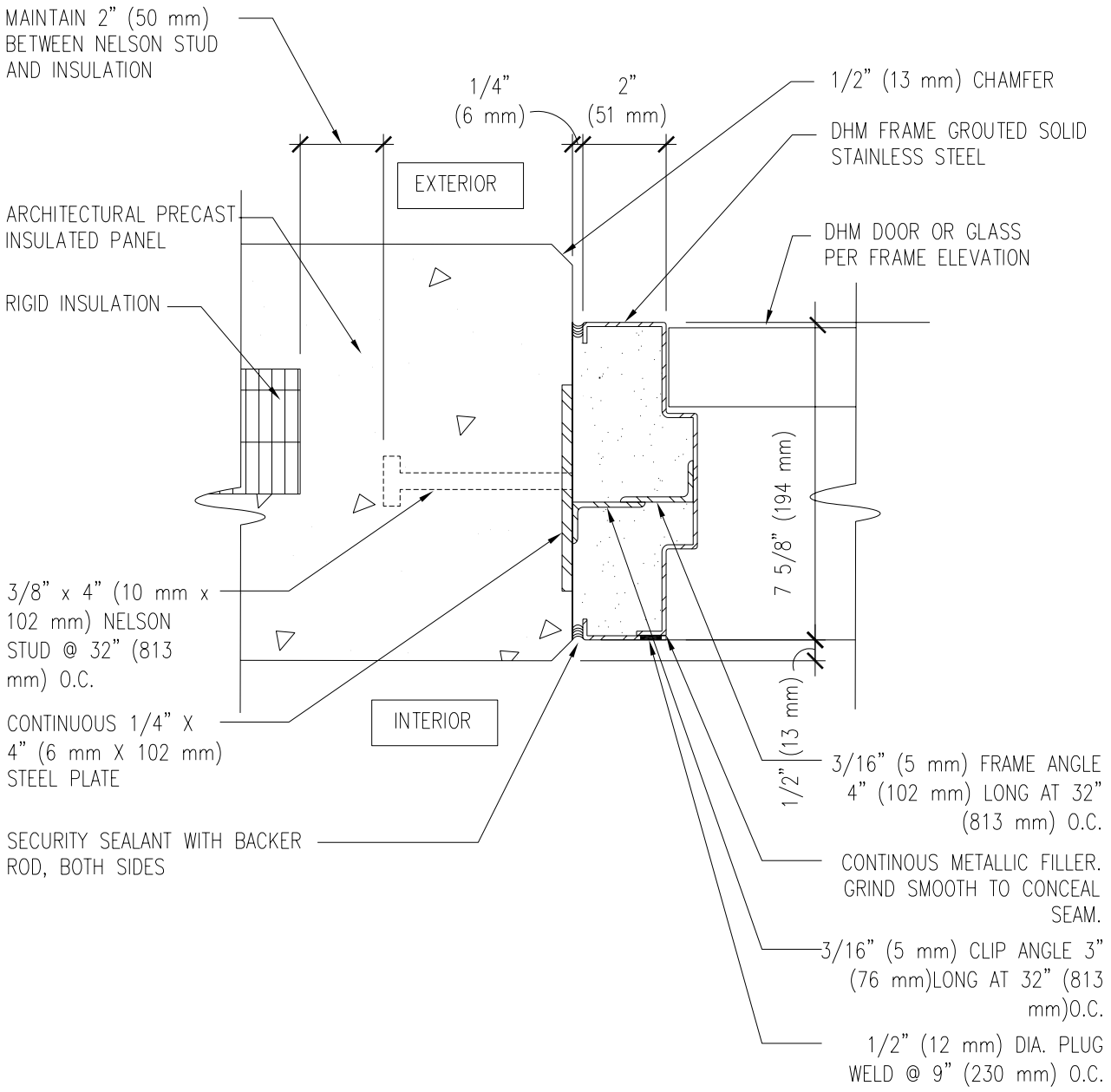

DHM JAMB AT EXTERIOR PRECAST

DETENTION CONSTRUCTION STANDARDS			SERVICE PROCESSING CENTER
U.S. Immigration and Customs Enforcement	**REF NUMBER:**	**TITLE:** DETENTION HOLLOW METAL JAMB AT EXTERIOR PRECAST	**NUMBER** 11-211
	DATE: 08 OCTOBER 2004		File: 11-211.dwg
	SCALE: 3" = 1'-0"		

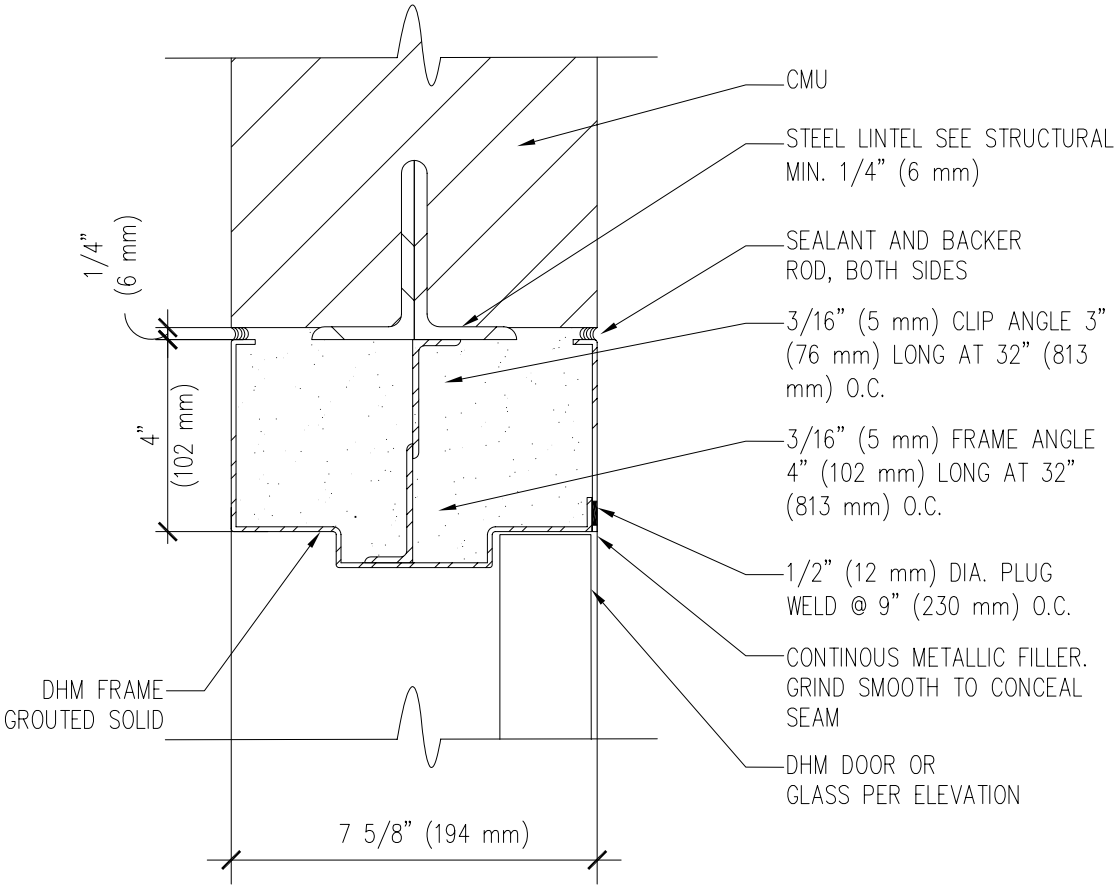

DHM HEAD AT STEEL LINTEL

DETENTION CONSTRUCTION STANDARDS			SERVICE PROCESSING CENTER
U.S. Immigration and Customs Enforcement	**REF NUMBER:**	**TITLE:** DETENTION HOLLOW METAL HEAD AT STEEL LINTEL	**NUMBER** 11-212
	DATE: 08 OCTOBER 2004		File: 11-212.dwg
	SCALE: 3" = 1'-0"		

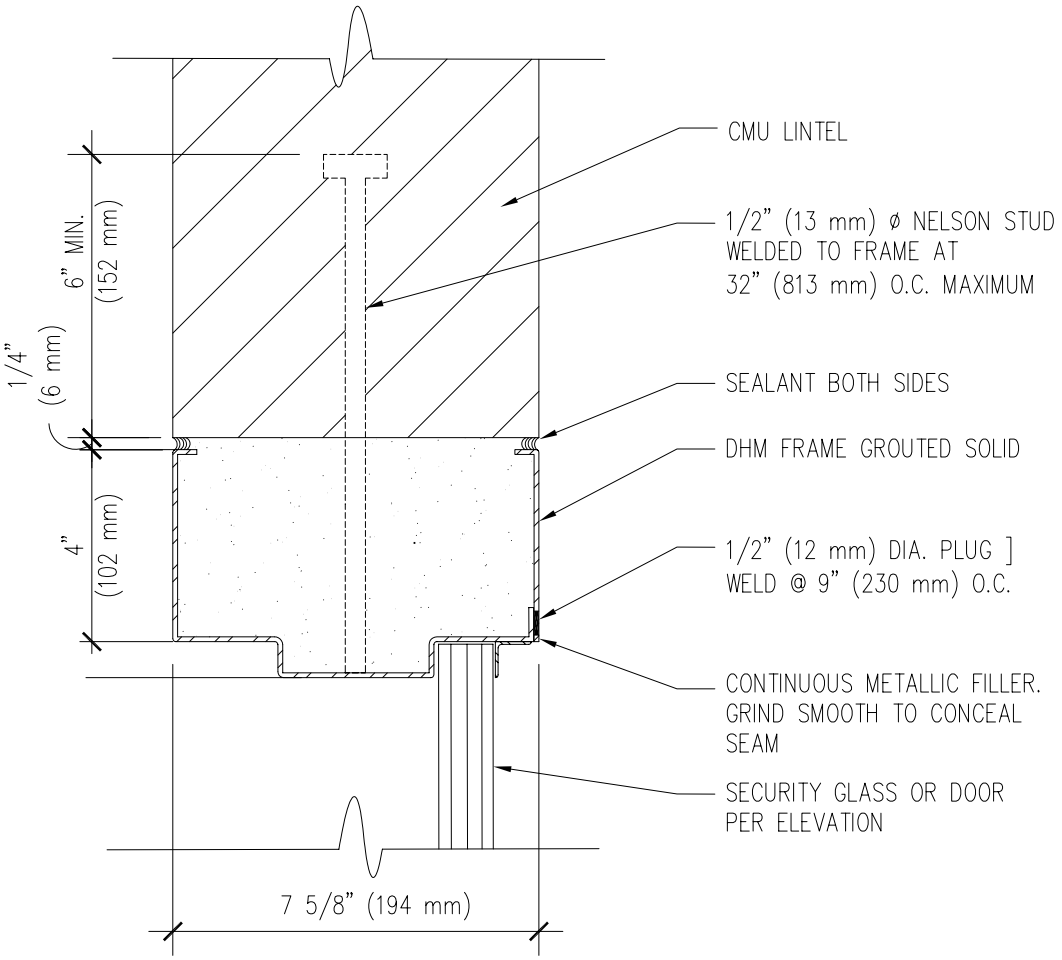

DHM HEAD AT CMU LINTEL

DETENTION CONSTRUCTION STANDARDS			SERVICE PROCESSING CENTER
U.S. Immigration and Customs Enforcement	**REF NUMBER:**	**TITLE:** DETENTION HOLLOW METAL HEAD AT CMU LINTEL	**NUMBER** 11-213
	DATE: 08 OCTOBER 2004		
	SCALE: 3" = 1'-0"		File: 11-213.dwg

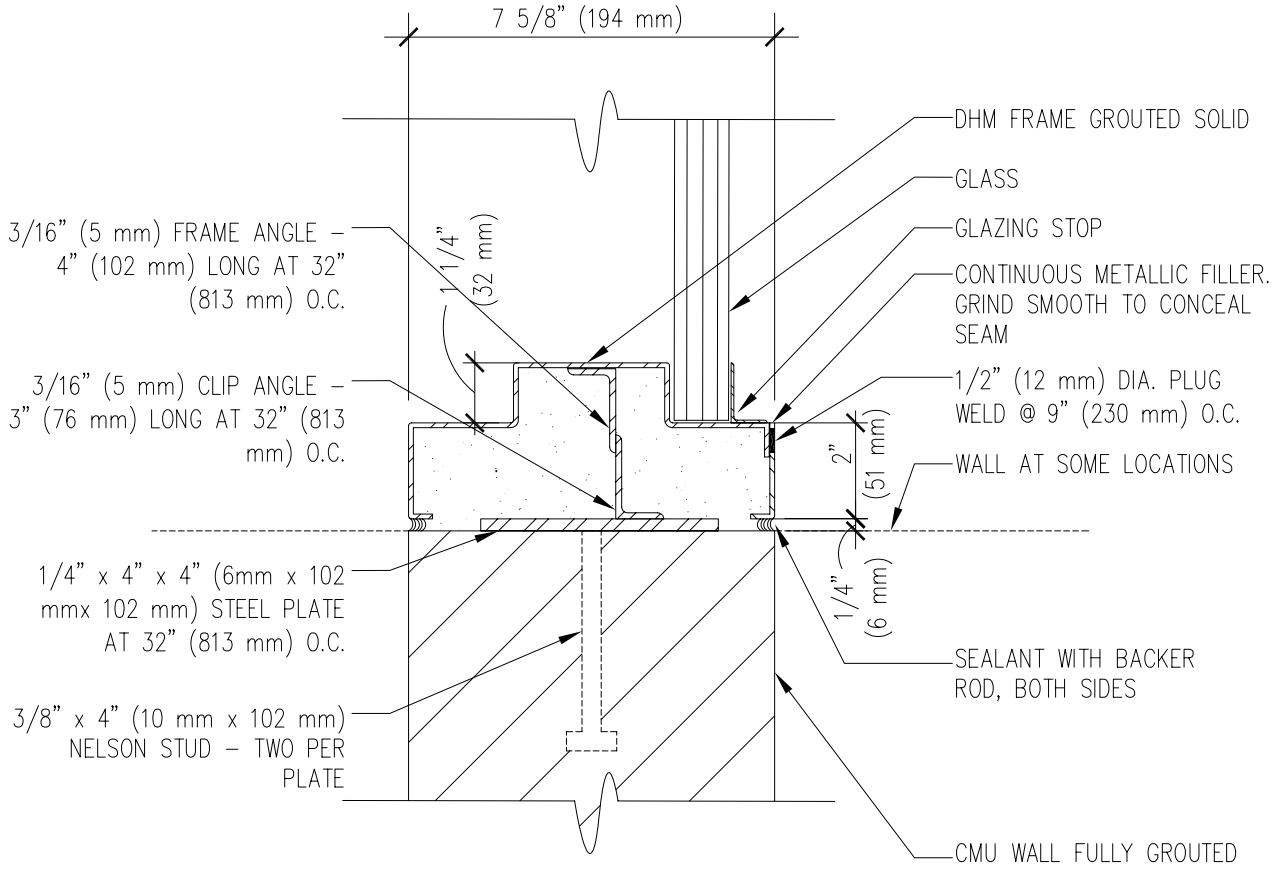

DHM SILL AT CMU (JAMB SIM.)

DETENTION CONSTRUCTION STANDARDS			SERVICE PROCESSING CENTER
U.S. Immigration and Customs Enforcement	**REF NUMBER:**	**TITLE:** DETENTION HOLLOW METAL SILL AT CMU	**NUMBER** 11-214
	DATE: 08 OCTOBER 2004		
	SCALE: 3" = 1'-0"		File: 11-214.dwg

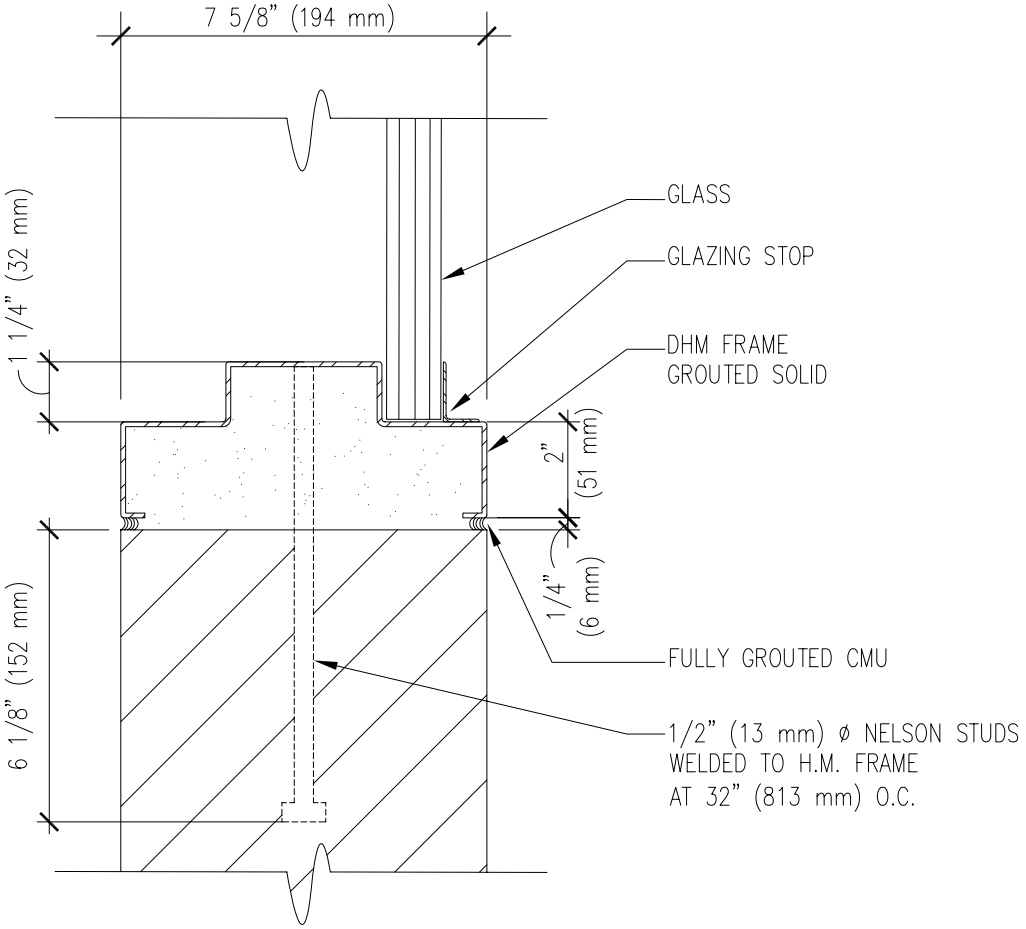

DHM SILL AT CMU (ALTERNATE)

JAMB SIIMILAR

DETENTION CONSTRUCTION STANDARDS **SERVICE PROCESSING CENTER**

U.S. Immigration and Customs Enforcement

REF NUMBER: 11-214	**TITLE:** DETENTION HOLLOW METAL SILL AT CMU (ALTERNATE)	**NUMBER** 11-215
DATE: 08 OCTOBER 2004		File: 11-215.dwg
SCALE: 3" = 1'-0"		

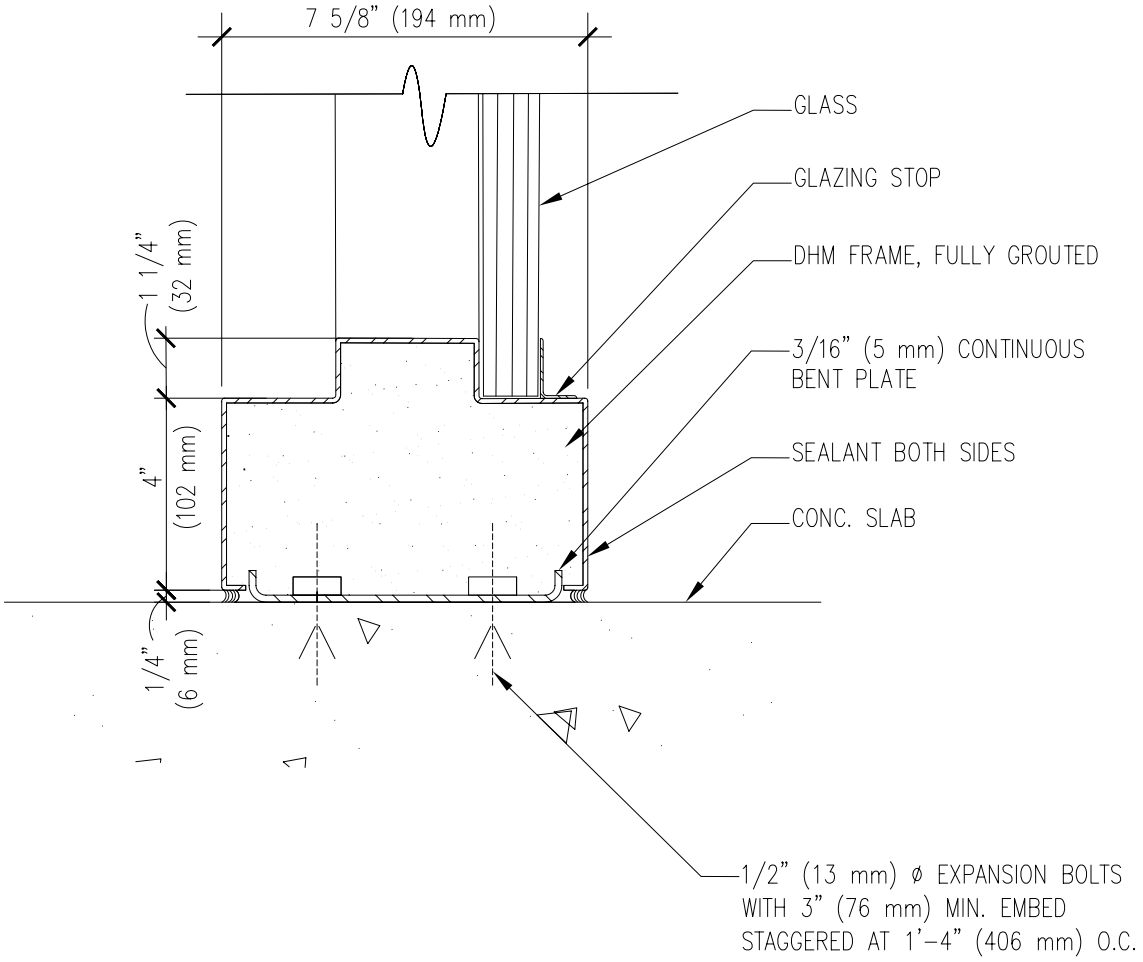

DHM SILL AT FLOOR

DETENTION CONSTRUCTION STANDARDS			SERVICE PROCESSING CENTER
U.S. Immigration and Customs Enforcement	**REF NUMBER:**	**TITLE:** DETENTION HOLLOW METAL SILL AT FLOOR	**NUMBER** 11-216
	DATE: 08 OCTOBER 2004		
	SCALE: 3" = 1'-0"		File: 11-216.dwg

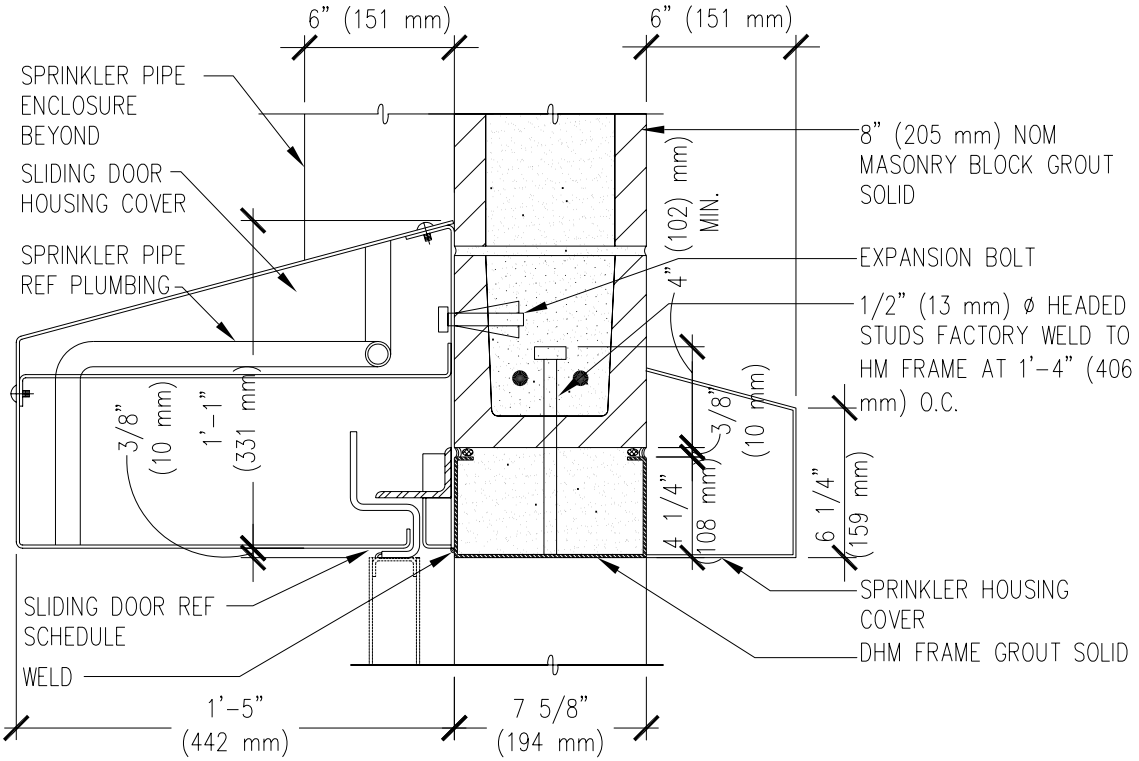

SLIDING DOOR HEAD DETAIL (INTERIOR)

DETENTION CONSTRUCTION STANDARDS			SERVICE PROCESSING CENTER
U.S. Immigration and Customs Enforcement	**REF NUMBER:**	**TITLE:** SLIDING DOOR HEAD DETAIL (INTERIOR)	**NUMBER** 11-218
	DATE: 08 OCTOBER 2004		File: 11-218.dwg
	SCALE: 3" = 1'-0"		

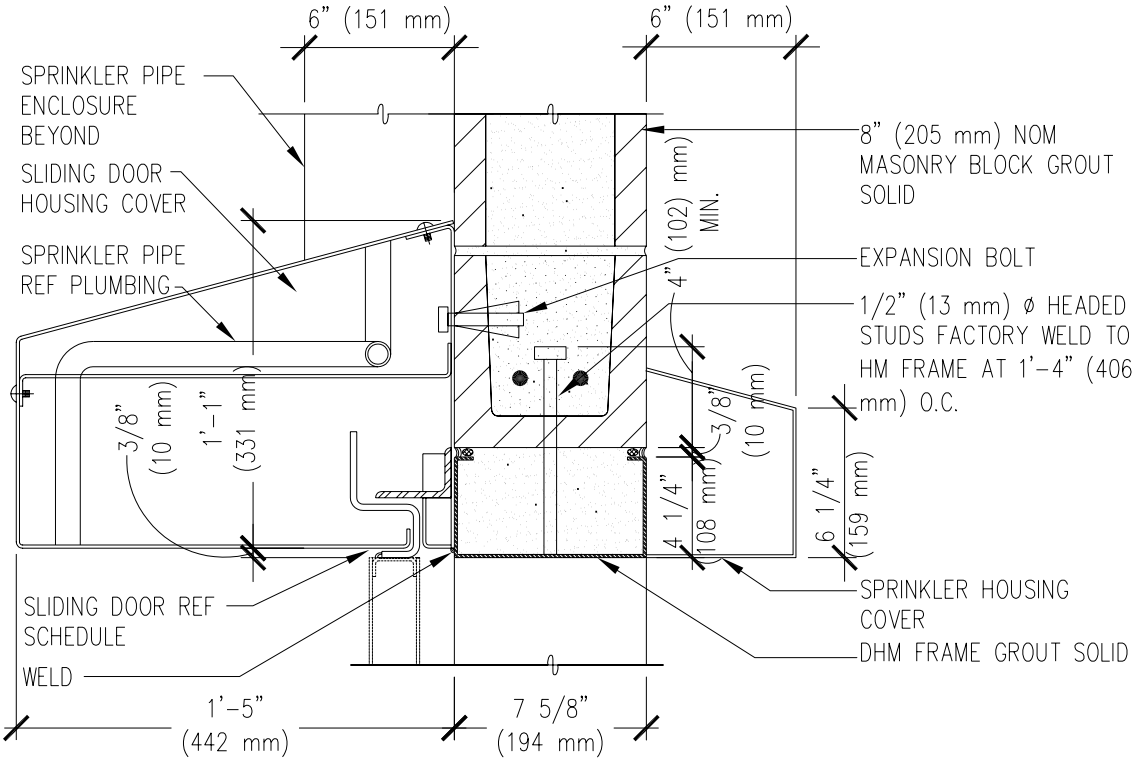

SLIDING DOOR HEAD DETAIL (INTERIOR)

DETENTION CONSTRUCTION STANDARDS			SERVICE PROCESSING CENTER
U.S. Immigration and Customs Enforcement	**REF NUMBER:**	**TITLE:** SLIDING DOOR HEAD DETAIL (INTERIOR)	**NUMBER** 11-218
	DATE: 08 OCTOBER 2004		File: 11-218.dwg
	SCALE: 3" = 1'-0"		

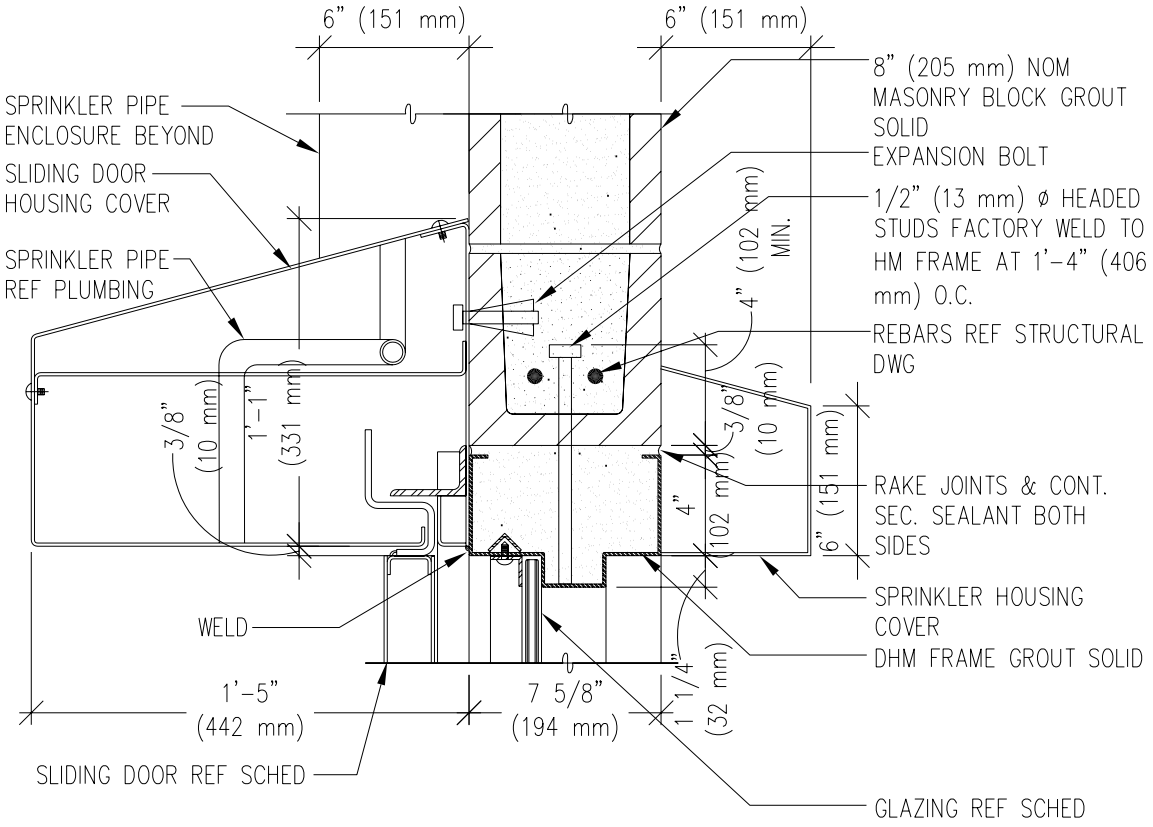

SLIDING DOOR HEAD DETAIL AT WINDOW

DETENTION CONSTRUCTION STANDARDS			SERVICE PROCESSING CENTER
U.S. Immigration and Customs Enforcement	**REF NUMBER:**	**TITLE:** SLIDING DOOR HEAD DETAIL AT WINDOW	**NUMBER** 11-219
	DATE: 08 OCTOBER 2004		
	SCALE: 1 1/2" = 1'-0"		File: 11-219.dwg

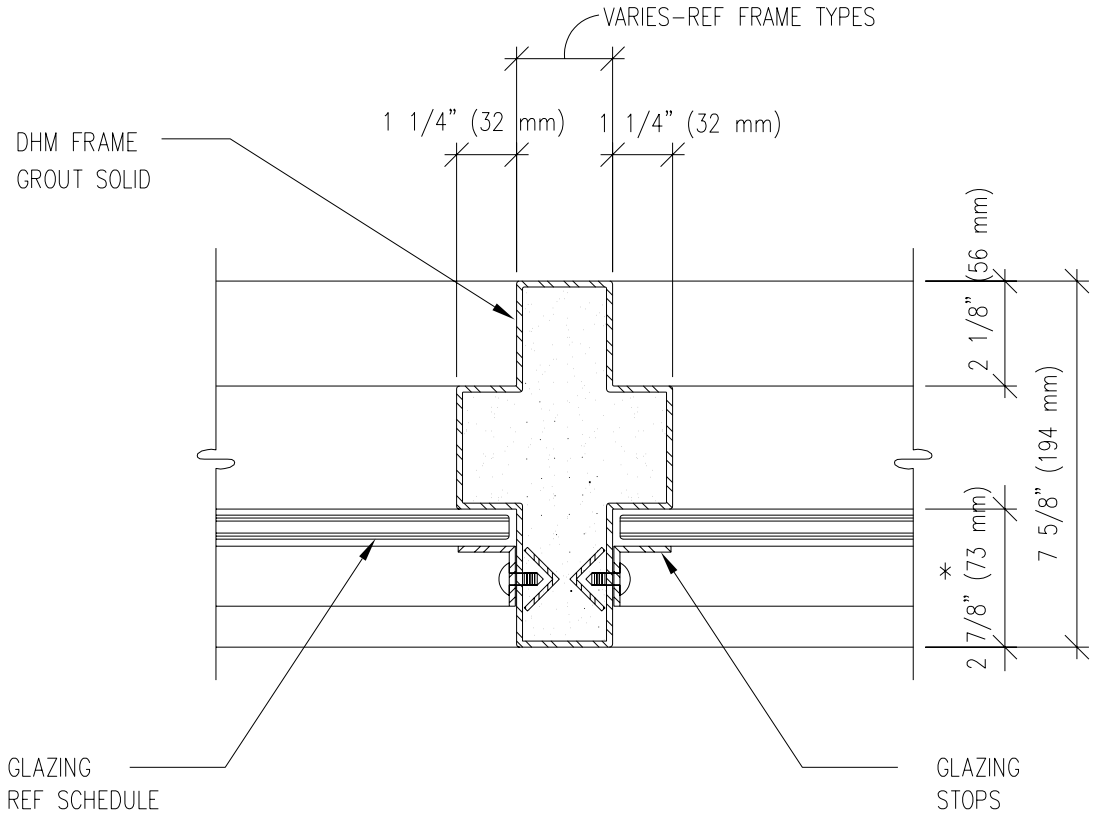

* DIMENSIONS MUST BE SUFFICIENT TO ACCOMMODATE GLAZING STOP AND GLASS SETTING

INTERMEDIATE WINDOW MULLION DETAIL

DETENTION CONSTRUCTION STANDARDS			SERVICE PROCESSING CENTER
U.S. Immigration and Customs Enforcement	**REF NUMBER:**	**TITLE:** INTERMEDIATE WINDOW MULLION DETAIL	**NUMBER** 11-220
	DATE: 08 OCTOBER 2004		
	SCALE: 3" = 1'-0"		File: 11-220.dwg

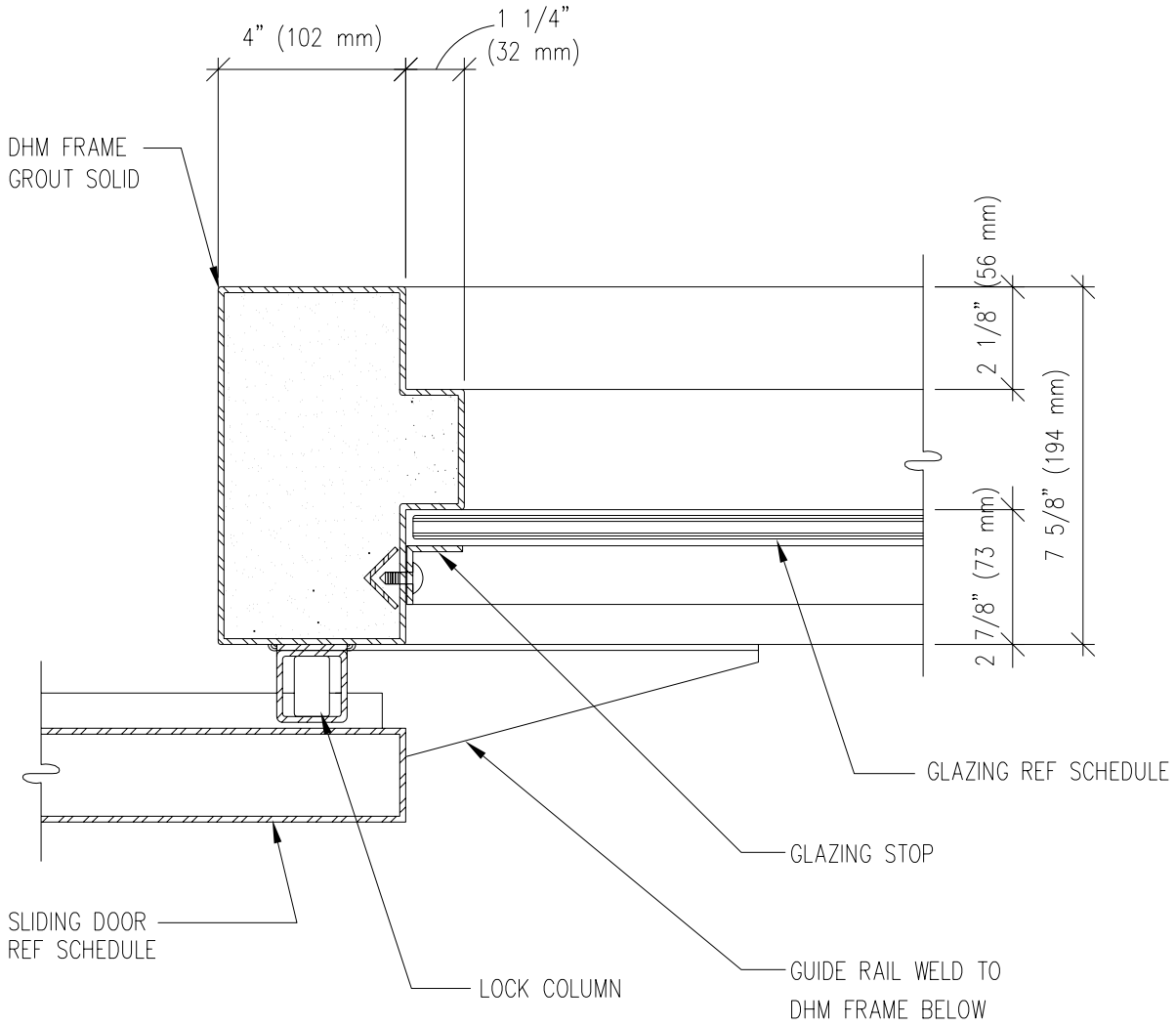

SLIDING DOOR JAMB/WINDOW MULLION DETAIL

DETENTION CONSTRUCTION STANDARDS			SERVICE PROCESSING CENTER
U.S. Immigration and Customs Enforcement	**REF NUMBER:**	**TITLE:** SLIDING DOOR JAMB/ WINDOW MULLION DETAIL	**NUMBER** 11-221
	DATE: 08 OCTOBER 2004		File: 11-221.dwg
	SCALE: 3" = 1'-0"		

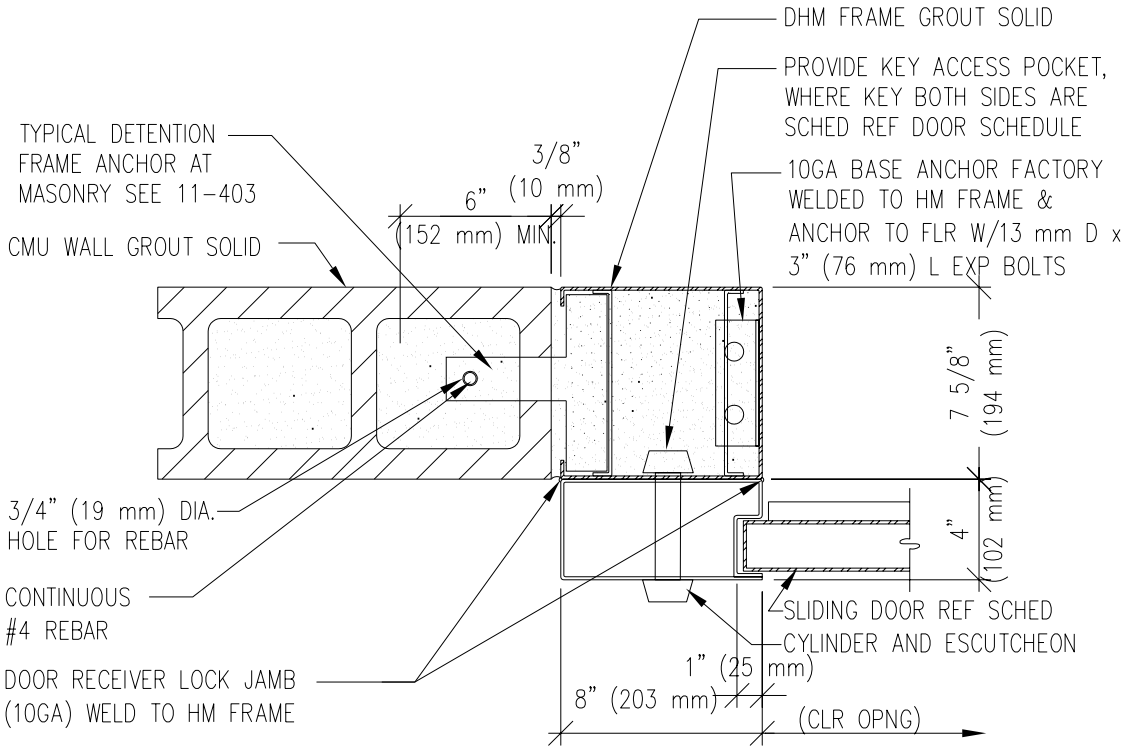

SLIDING DOOR RECEIVER DETAIL

DETENTION CONSTRUCTION STANDARDS			SERVICE PROCESSING CENTER
U.S. Immigration and Customs Enforcement	**REF NUMBER:**	**TITLE:** SLIDING DOOR RECEIVER DETAIL	**NUMBER** 11-222
	DATE: 08 OCTOBER 2004		
	SCALE: 3" = 1'-0"		File: 11-222.dwg

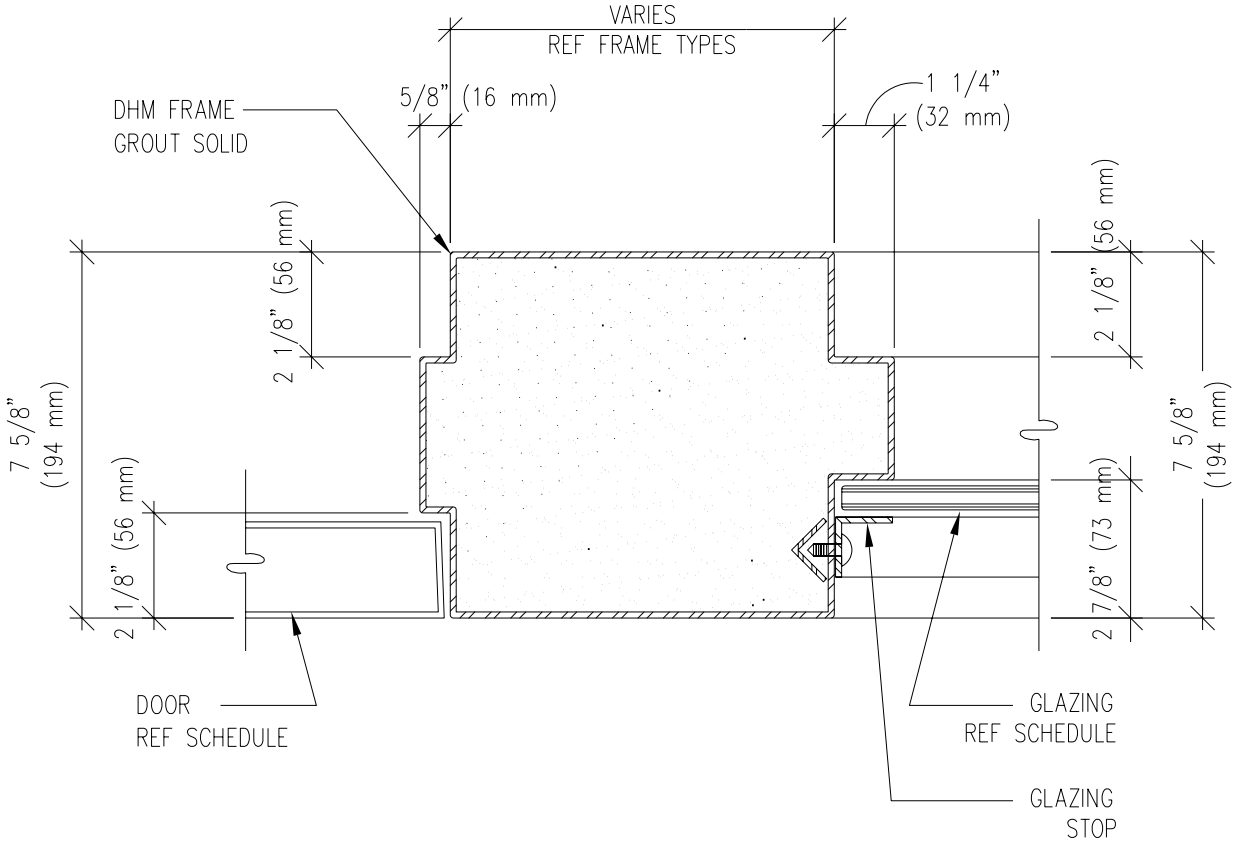

DOOR & WINDOW MULLION DETAIL

DETENTION CONSTRUCTION STANDARDS			SERVICE PROCESSING CENTER
U.S. Immigration and Customs Enforcement	**REF NUMBER:**	**TITLE:** DOOR & WINDOW MULLION DETAIL	**NUMBER** 11-223
	DATE: 08 OCTOBER 2004		
	SCALE: 3" = 1'-0"		File: 11-223.dwg

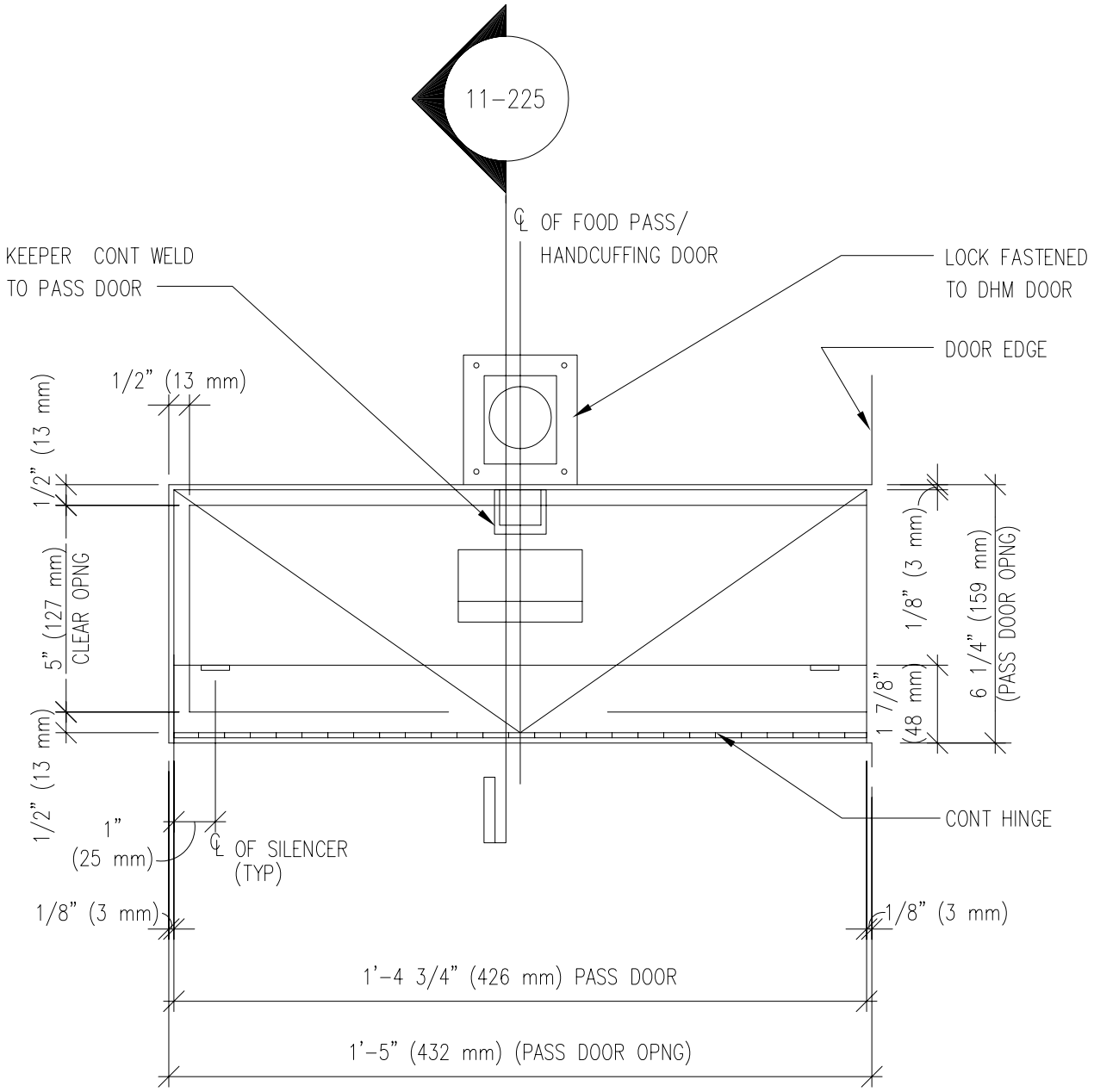

FOOD PASS/HANDCUFF ELEVATION

DETENTION CONSTRUCTION STANDARDS			SERVICE PROCESSING CENTER
U.S. Immigration and Customs Enforcement	**REF NUMBER:** 11-225	**TITLE:** FOOD PASS/ HAND CUFF ELEVATION	**NUMBER** 11-224
	DATE: 08 OCTOBER 2004		File: 11-224.dwg
	SCALE: 3" = 1'-0"		

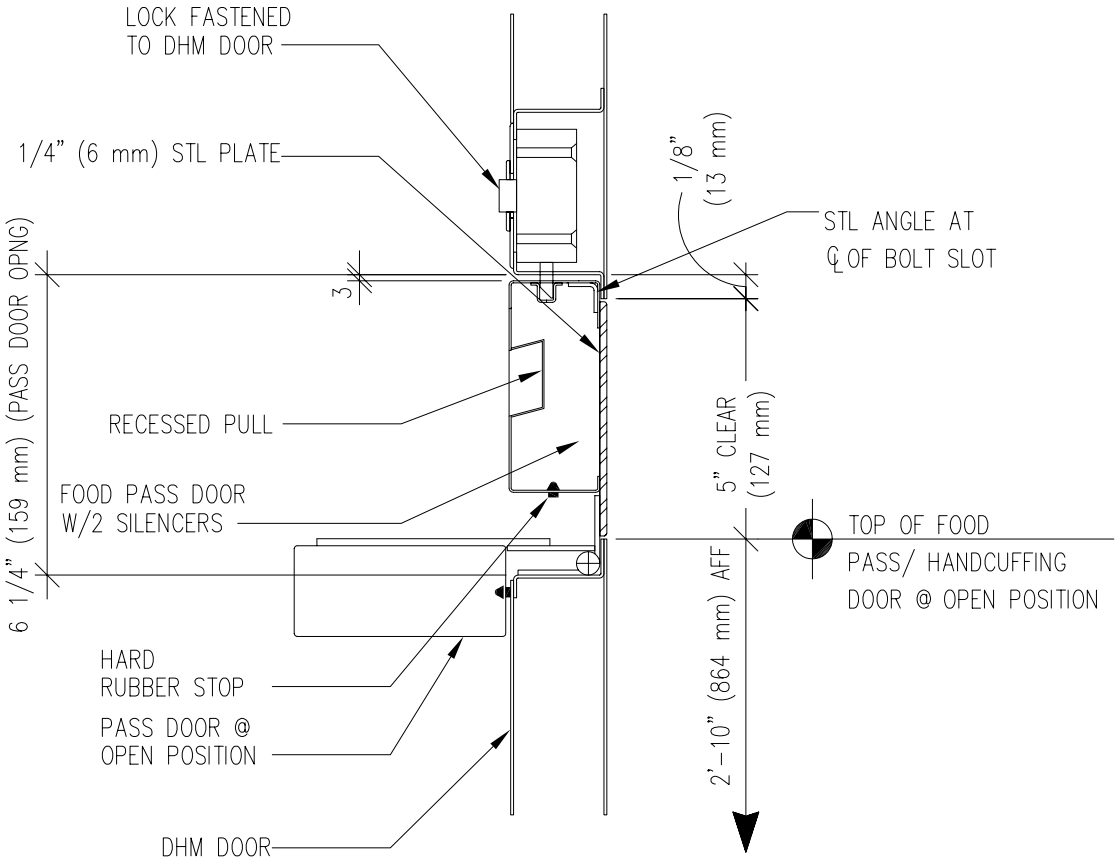

FOOD PASS/HANDCUFF SECTION

DETENTION CONSTRUCTION STANDARDS			SERVICE PROCESSING CENTER
U.S. Immigration and Customs Enforcement	**REF NUMBER:** 11-224	**TITLE:** FOOD PASS/ HANDCUFF SECTION	**NUMBER** 11-225
	DATE: 08 OCTOBER 2004		File: 11-225.dwg
	SCALE: 3" = 1'-0"		

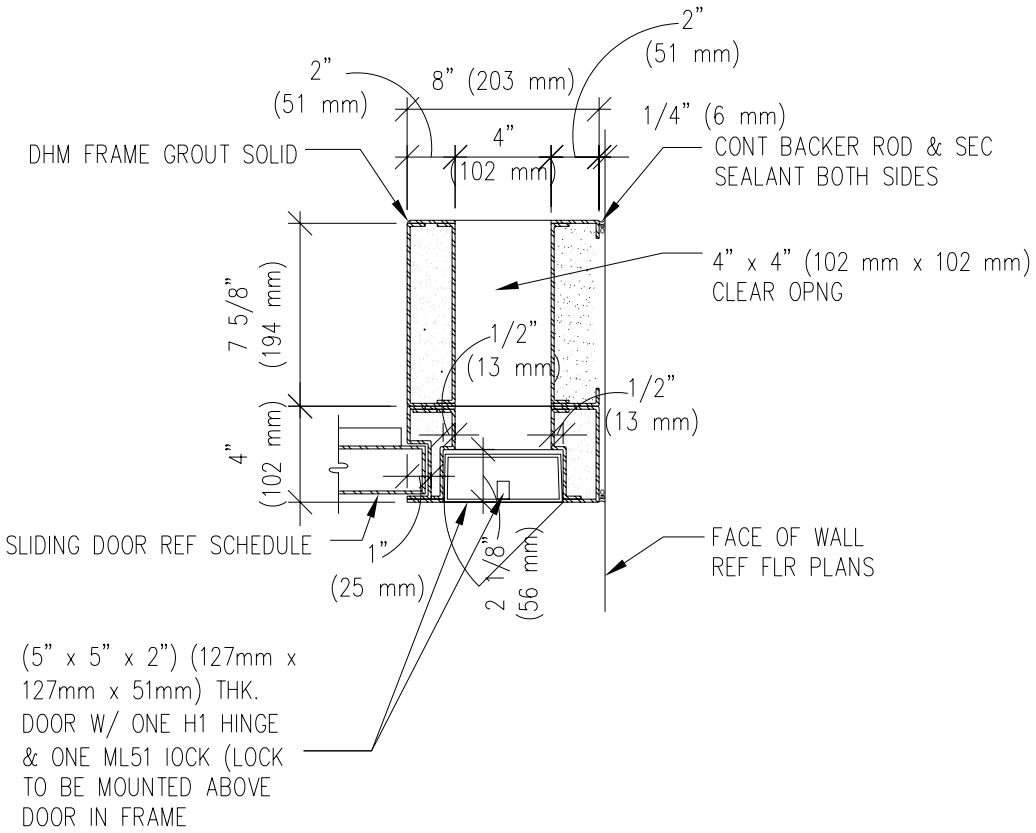

FIRE HOSE PASS-THRU AT SLIDING DOOR JAMB DETAIL

DETENTION CONSTRUCTION STANDARDS			SERVICE PROCESSING CENTER
U.S. Immigration and Customs Enforcement	**REF NUMBER:**	**TITLE:** FIRE HOSE PASS-THRU AT SLIDING DOOR JAMB DETAIL	**NUMBER** 11-226
	DATE: 08 OCTOBER 2004		File: 11-226.dwg
	SCALE: 3" = 1'-0"		

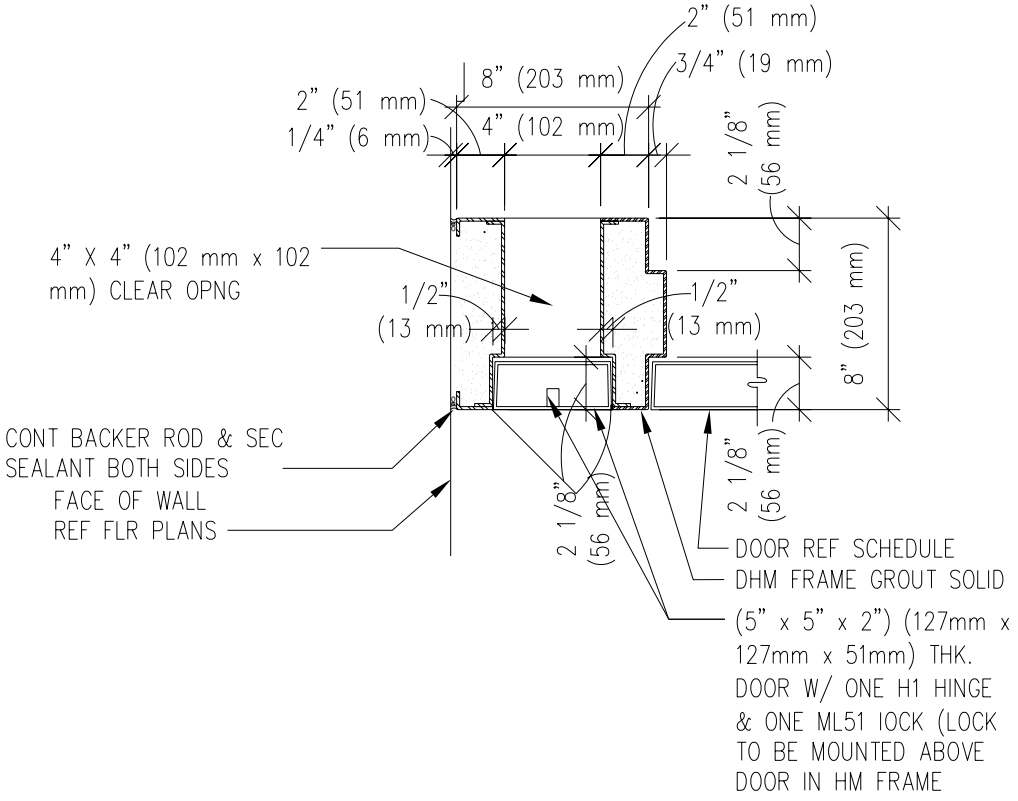

FIRE HOSE PASS-THRU AT SWING DOOR JAMB DETAIL

DETENTION CONSTRUCTION STANDARDS			SERVICE PROCESSING CENTER
U.S. Immigration and Customs Enforcement	**REF NUMBER:**	**TITLE:** FIRE HOSE PASS-THRU AT SWING DOOR JAMB DETAIL	**NUMBER** 11-227
	DATE: 08 OCTOBER 2004		
	SCALE: 1 1/2" = 1'-0"		File: 11-227.dwg

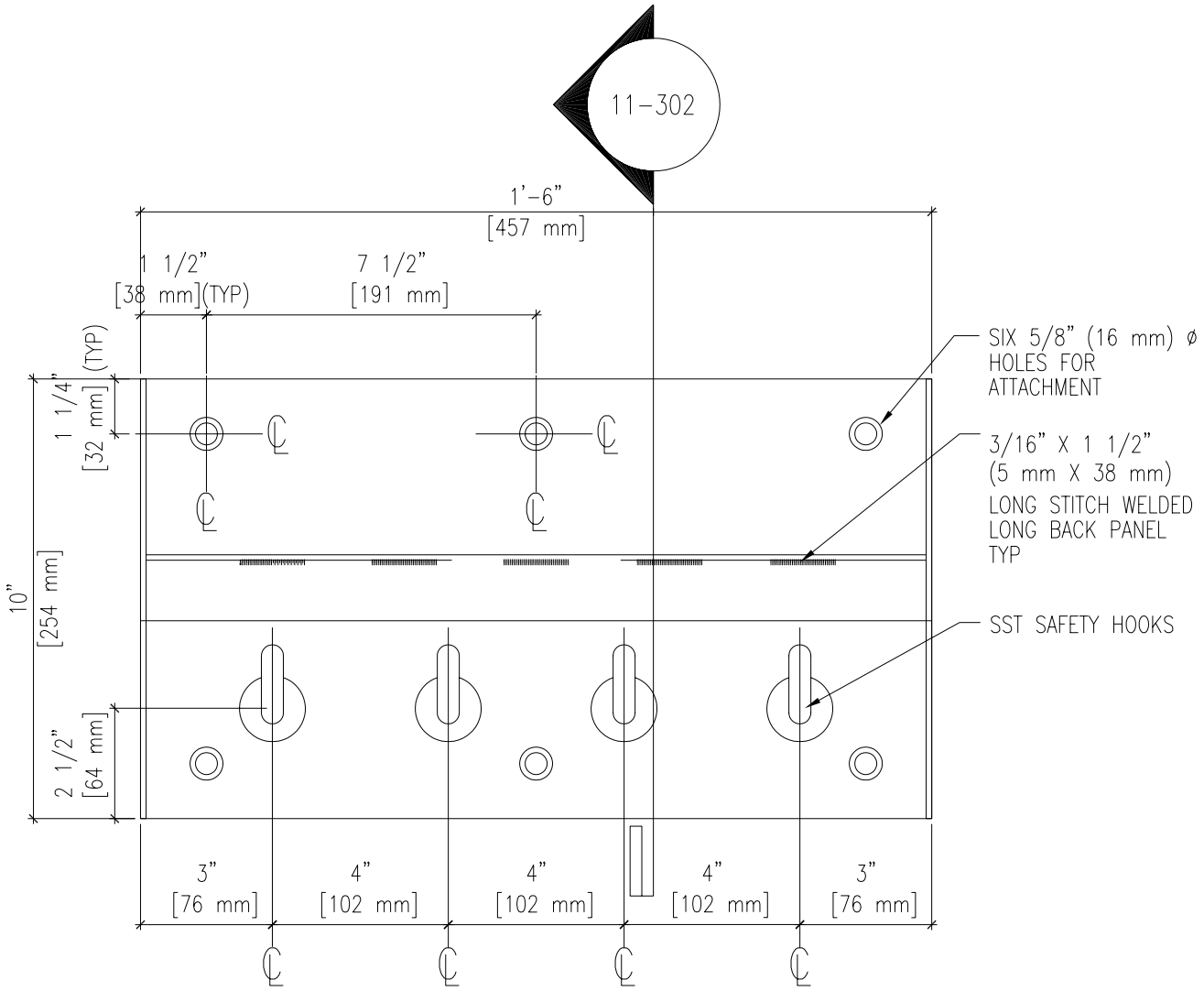

BOOK SHELF/SAFETY HOOKS ELEVATION DETAIL

DETENTION CONSTRUCTION STANDARDS **SERVICE PROCESSING CENTER**

U.S. Immigration and Customs Enforcement

REF NUMBER: 11-302	**TITLE:** BOOK SHELF/ SAFETY HOOKS ELEVATION DETAIL	**NUMBER** 11-301
DATE: 08 OCTOBER 2004		File: 11-301.dwg
SCALE: 3"=1'-0"		

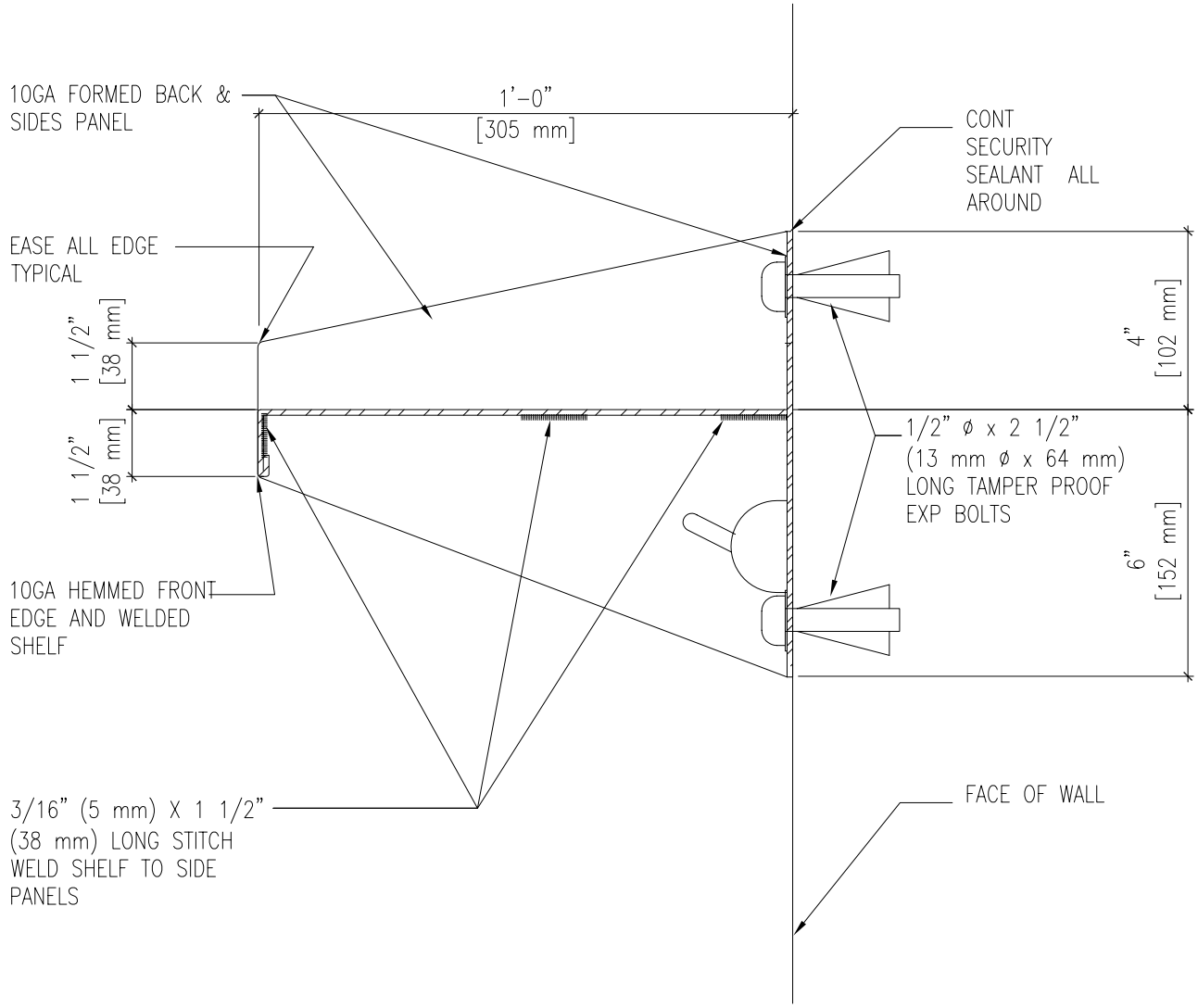

BOOK SHELF/SAFETY HOOKS SECTION DETAIL

WHERE BOOK SHELF IS INSTALLED WITHIN MODULAR PRECAST CELLS. COORDINATE MOUNTING METHOD WITH CELL MANUFACTURER.

DETENTION CONSTRUCTION STANDARDS **SERVICE PROCESSING CENTER**

U.S. Immigration and Customs Enforcement

REF NUMBER: 11-301	**TITLE:** BOOK SHELF/ SAFETY HOOKS SECTION DETAIL	**NUMBER** 11-302
DATE: 08 OCTOBER 2004		File: 11-302.dwg
SCALE: 3"=1'-0"		

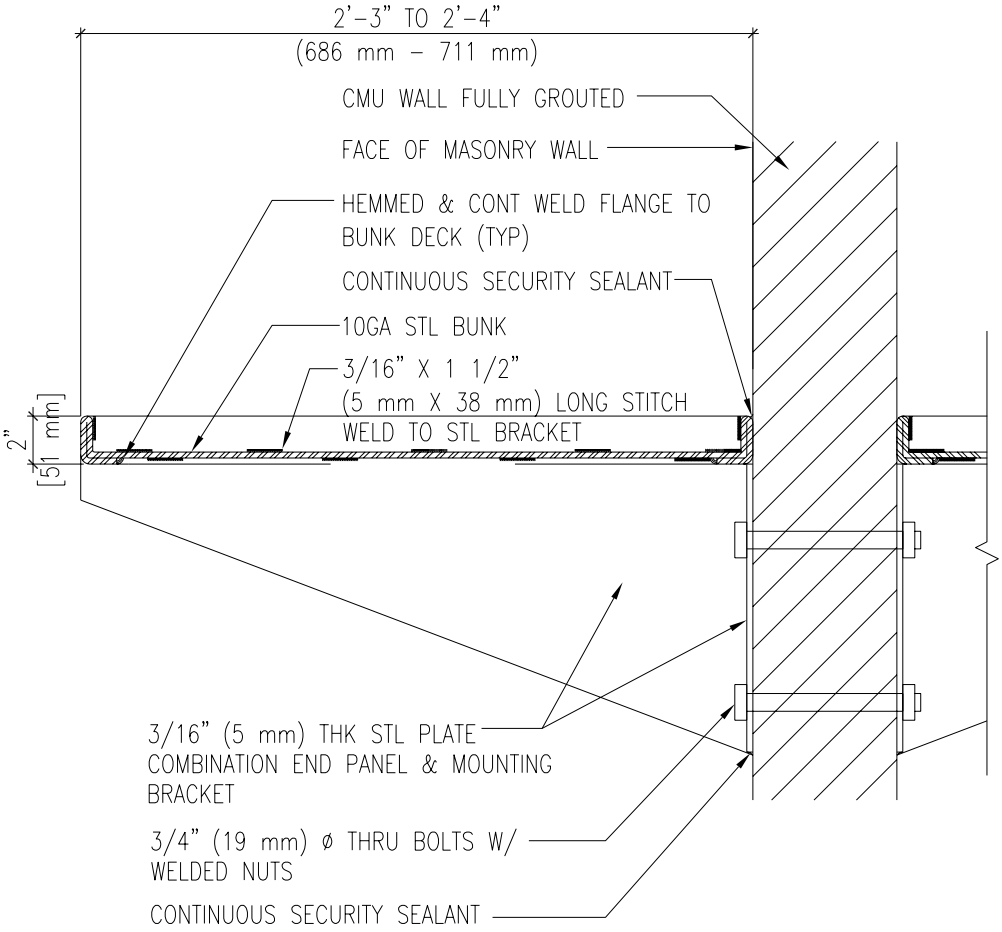

CELL BUNK SECTION DETAIL

WHERE CELL BUNK IS INSTALLED WITHIN MODULAR PRECAST CELLS, COORDINATE MOUNTING METHOD WITH CELL MANUFACTURER.

DETENTION CONSTRUCTION STANDARDS **SERVICE PROCESSING CENTER**

U.S. Immigration and Customs Enforcement

REF NUMBER: 11-305	**TITLE:** CELL BUNK SECTION DETAIL	**NUMBER** 11-303
DATE: 08 OCTOBER 2004		File: 11-303.dwg
SCALE: 3"=1'-0"		

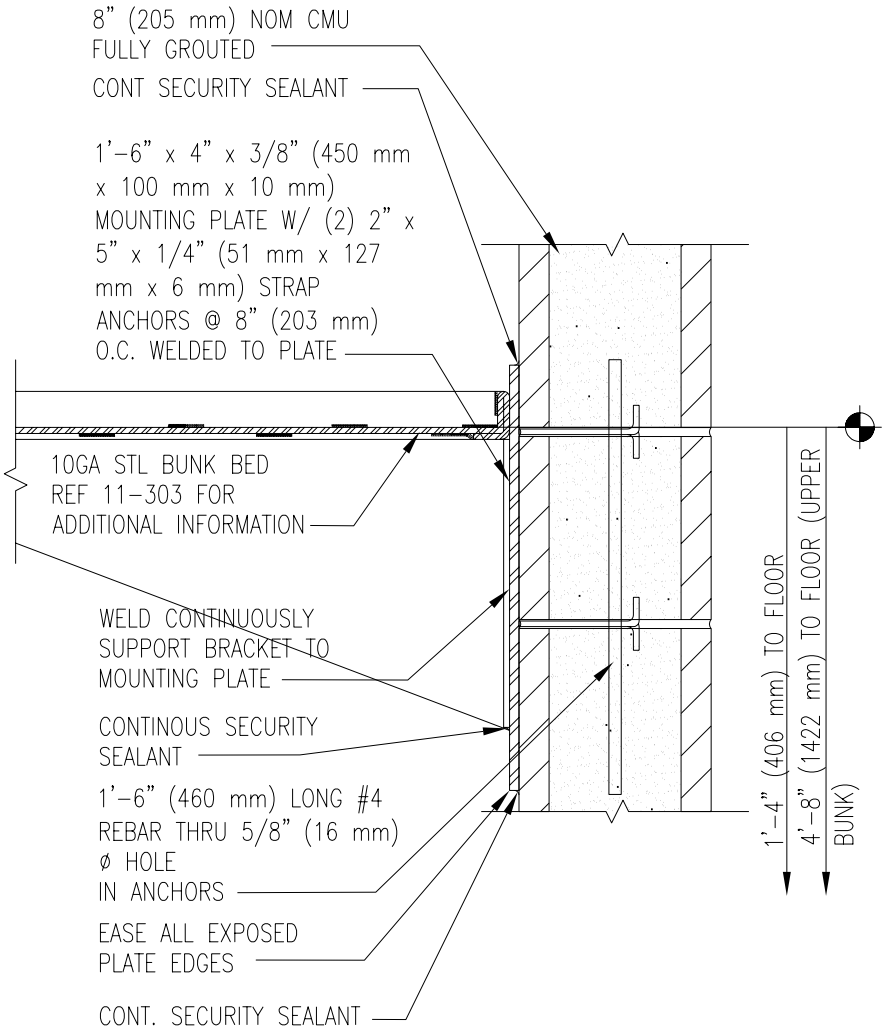

WHERE CELL BUNK IS INSTALLED WITHIN MODULAR PRECAST CELLS, COORDINATE MOUNTING METHOD WITH CELL MANUFACTURER.

CELL BUNK ALTERNATE MOUNTING SECTION DETAIL

DETENTION CONSTRUCTION STANDARDS			SERVICE PROCESSING CENTER
U.S. Immigration and Customs Enforcement	**REF NUMBER:** 11-305	**TITLE:** CELL BUNK ALTERNATE MOUNT. SECTION DETAIL	**NUMBER** 11-304
	DATE: 08 OCTOBER 2004		File: 11-304.dwg
	SCALE: 3"=1'-0"		

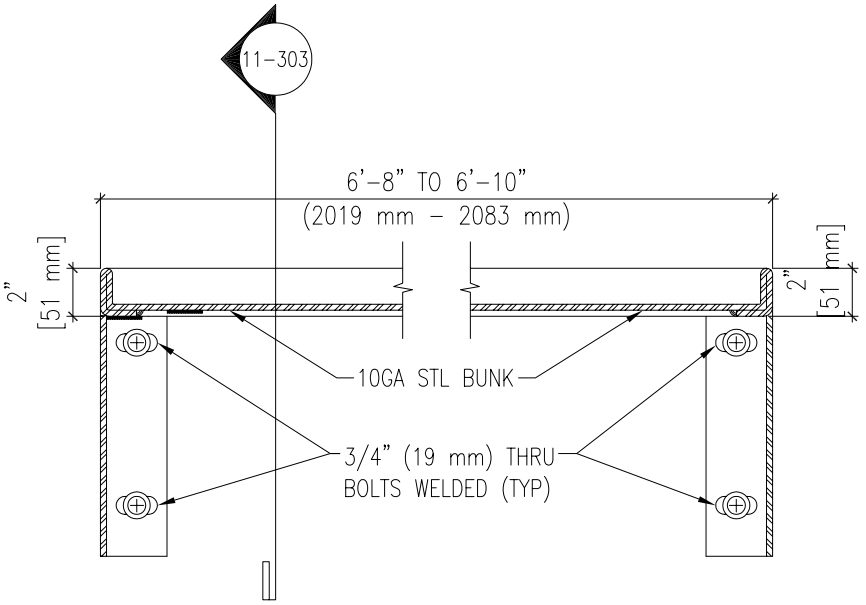

CELL BUNK SUPPORT ANGLE SECTION DETAIL

DETENTION CONSTRUCTION STANDARDS **SERVICE PROCESSING CENTER**

U.S. Immigration and Customs Enforcement

REF NUMBER: 11-303, 11-304	**TITLE:** CELL BUNK SUPPORT ANGLE SECTION DETAIL	**NUMBER** **11-305**
DATE: 08 OCTOBER 2004		File: 11-305.dwg
SCALE: 6" = 1'-0"		

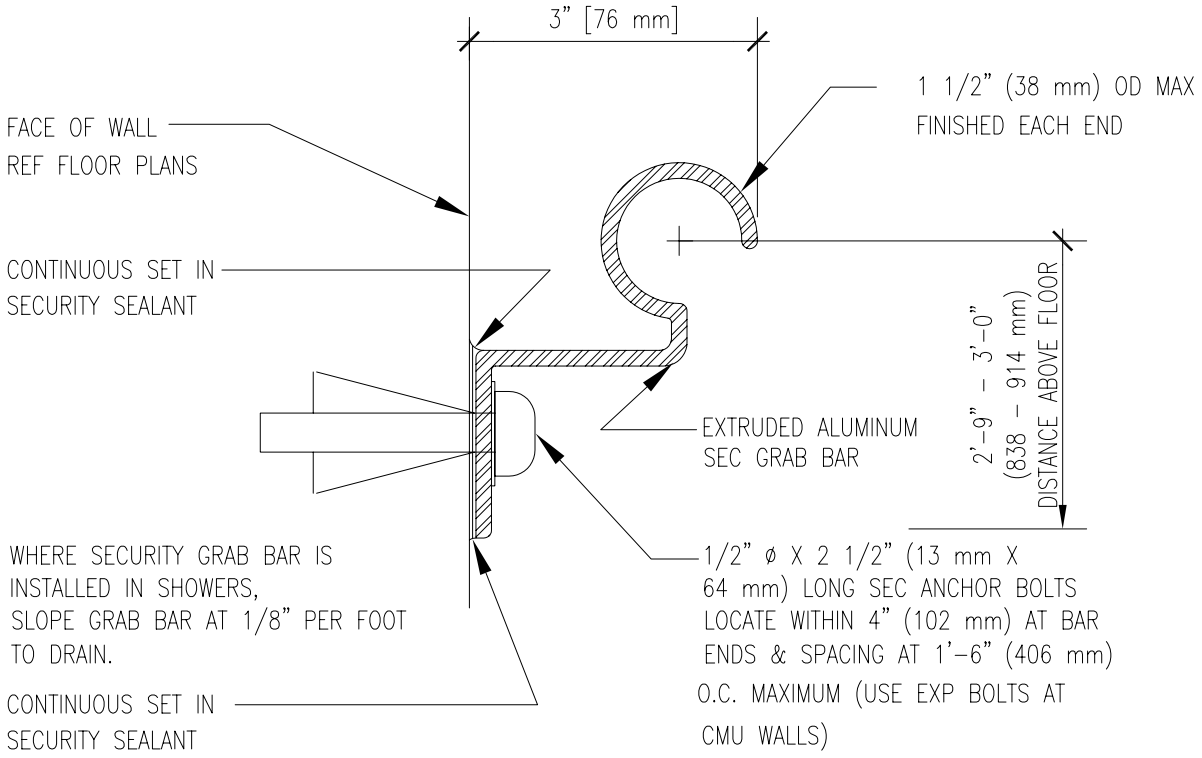

SECURITY GRAB BAR DETAIL

DETENTION CONSTRUCTION STANDARDS			SERVICE PROCESSING CENTER
U.S. Immigration and Customs Enforcement	**REF NUMBER:**	**TITLE:** SECURITY GRAB BAR DETAIL	**NUMBER** 11-306
	DATE: 08 OCTOBER 2004		File: 11-306.dwg
	SCALE: 6" = 1'-0"		

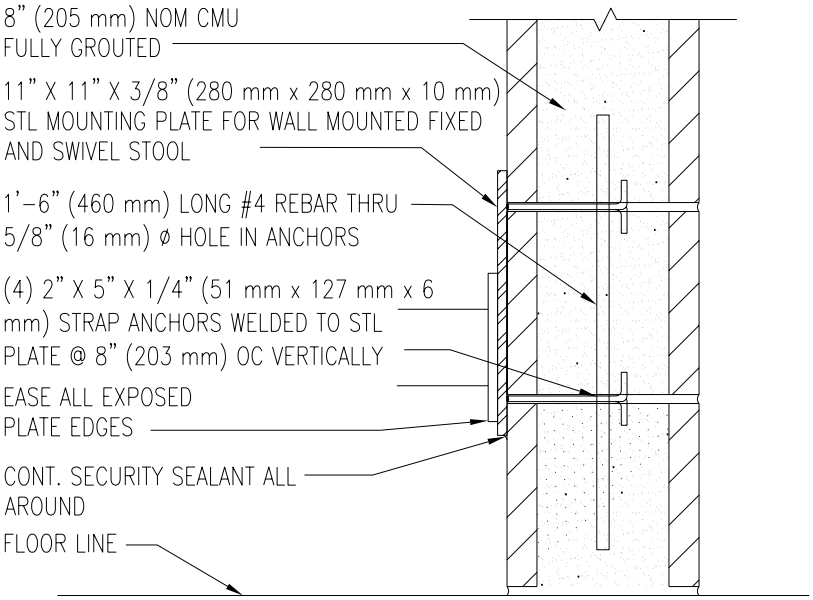

WHERE STOOL IS INSTALLED WITHIN MODULAR PRECAST CELLS,
COORDINATE MOUNTING WITH CELL MANUFACTURER.

WALL MOUNTED STOOL ANCHOR PLATE DETAIL

DETENTION CONSTRUCTION STANDARDS			SERVICE PROCESSING CENTER
U.S. Immigration and Customs Enforcement	**REF NUMBER:**	**TITLE:** WALL MOUNTED STOOL ANCHOR PLATE DETAIL	**NUMBER** 11-307
	DATE: 08 OCTOBER 2004		
	SCALE: 1 1/2" = 1'-0"		File: 11-307.dwg

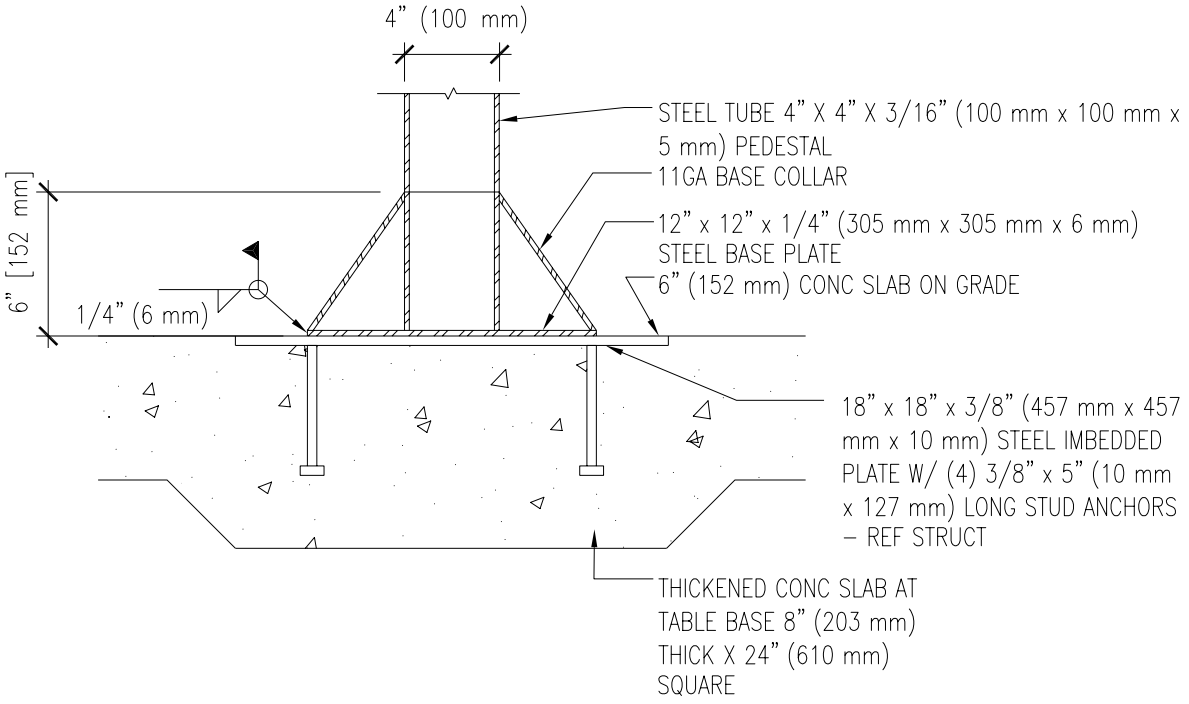

STEEL TABLE BASE SECTION

DETENTION CONSTRUCTION STANDARDS			SERVICE PROCESSING CENTER
U.S. Immigration and Customs Enforcement	**REF NUMBER:**	**TITLE:** STEEL TABLE BASE SECTION	**NUMBER** 11-308
	DATE: 08 OCTOBER 2004		File: 11-308.dwg
	SCALE: 1 1/2" = 1'-0"		

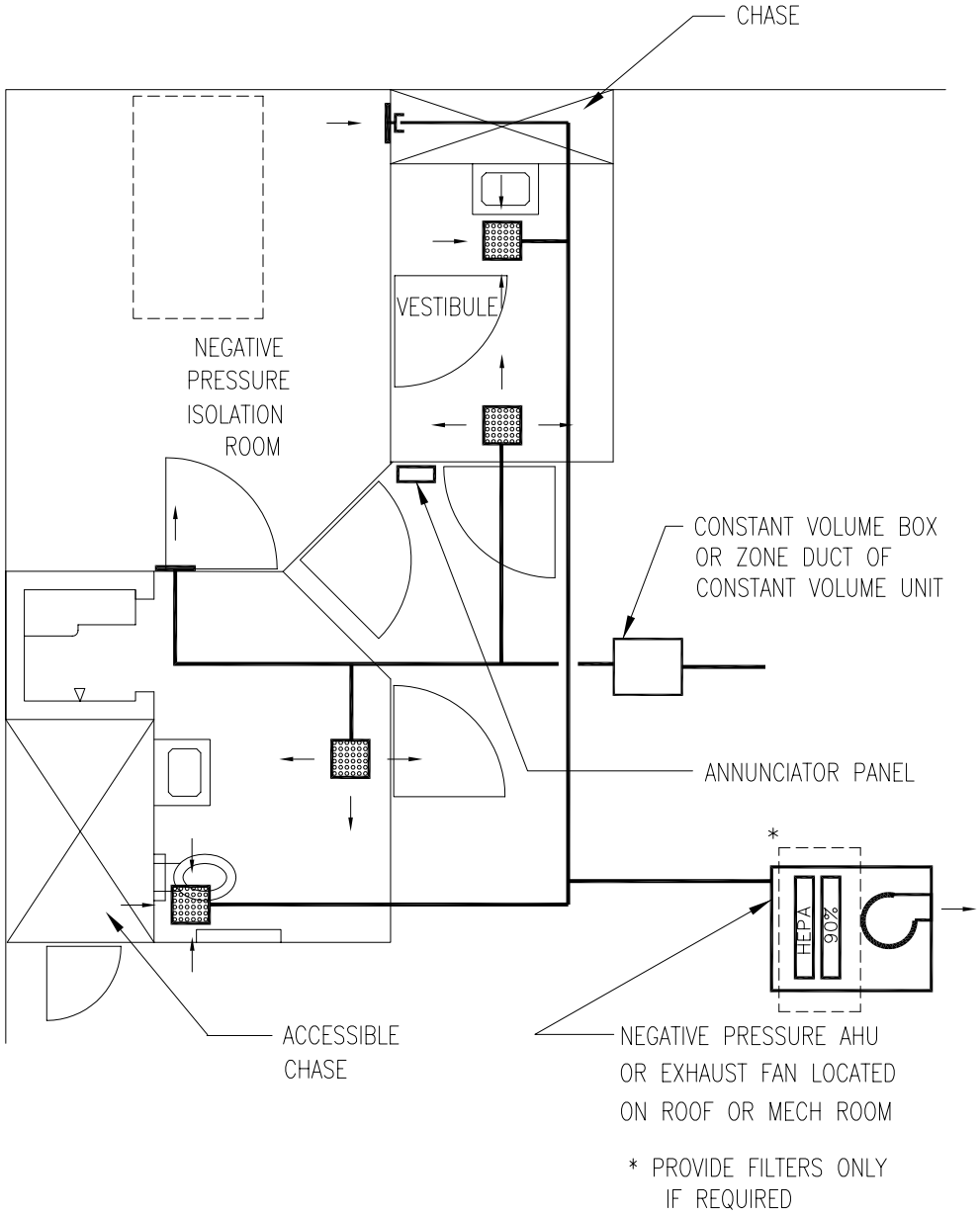

NOTES:

1. ACTUAL LAYOUT AND NUMBER OF ROOMS MAY VARY.
2. LOCATE SUPPLY DIFFUSERS HIGH NEAR DOORS AND RETURN GRILLES LOW ON OPPOSITE SIDE OF ROOM. ALL GRILLES TO BE SECURE TYPE ON SECURE CEILING.
3. ANTEROOM SHOULD BE NEGATIVE WITH RESPECT TO HALL AND ROOM SHOULD BE NEGATIVE WITH RESPECT TO ANTEROOM.

NEGATIVE PRESSURE ISOLATION ROOM CONCEPT LAYOUT

DETENTION CONSTRUCTION STANDARDS		SERVICE PROCESSING CENTER	
U.S. Immigration and Customs Enforcement	**REF NUMBER:**	**TITLE:** NEGATIVE PRESSURE ISOLATION ROOM LAYOUT	**NUMBER** 15-101
	DATE: 08 OCTOBER 2004		File: 15-101.dwg
	SCALE: NOT TO SCALE		

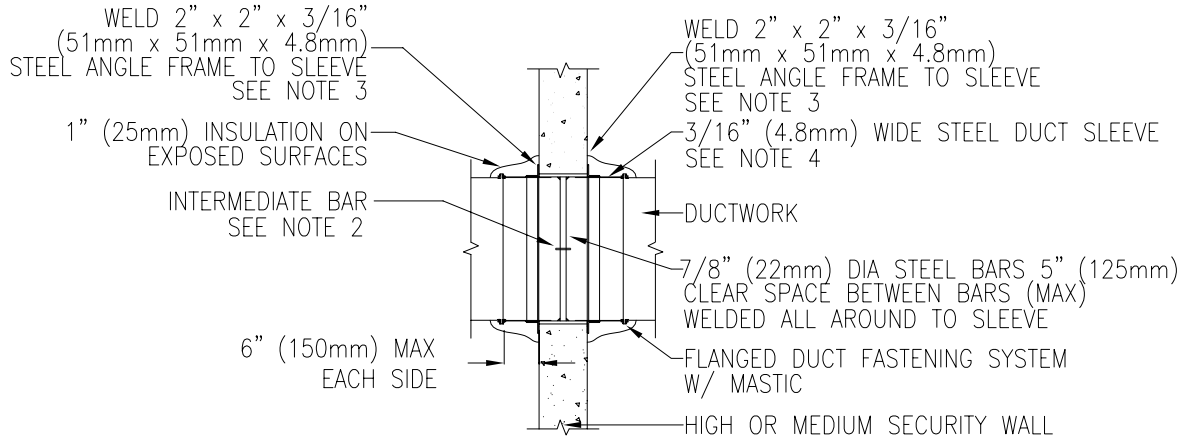

NOTES:

1. SECURITY BARRIERS ARE REQUIRED ON ALL PENETRATIONS IN "HIGH" AND "MEDIUM" SECURE WALLS, FLOORS, AND CEILINGS, WHERE OPENING IS LARGER THAN 8" X 8" (200 mm x 200 mm) OR LARGER THAN 5" (125 mm) SLIT. SECURITY BARRIERS ARE REQUIRED ON ALL PENETRATIONS 5" (125 mm) WIDE WHICH EXCEED 24" (600 mm) IN LENGTH.
2. BARS LONGER THAN 600mm SHALL BE PROVIDED WITH AN INTERMEDIATE FLAT BAR 2 1/2" X 3/8" (63.5mm x 9.5mm) WELDED ALL AROUND TO SLEEVE AND TACK WELDED TO BARS.
3. SECURING ANGLES SHALL BEAR ON WALL A MINIMUM OF 40mm ALL AROUND. ANGLE FIELD WELDS SHALL BE 3.2mm WIDE 25mm IN LENGTH AND 100mm OC (MIN).
4. SHOP WELD SLEEVE ASSEMBLY. ALL SHOP WELDS SHALL BE CONTINUOUS, 3.2mm WIDE (MIN).
5. SHOP PRIME EXPOSED STEEL
6. SECURITY BARRIERS SHALL BE FABRICATED OF TOOL RESISTING STEEL.

DUCT PENETRATION THROUGH HIGH AND MEDIUM SECURE WALL

DETENTION CONSTRUCTION STANDARDS			SERVICE PROCESSING CENTER
U.S. Immigration and Customs Enforcement	**REF NUMBER:**	**TITLE:**	**NUMBER**
	DATE: 08 OCTOBER 2004	DUCT PENETRATION THROUGH "HIGH" AND "MEDIUM" SECURE WALL	**15-201**
	SCALE: NOT TO SCALE		File: 15-201.dwg

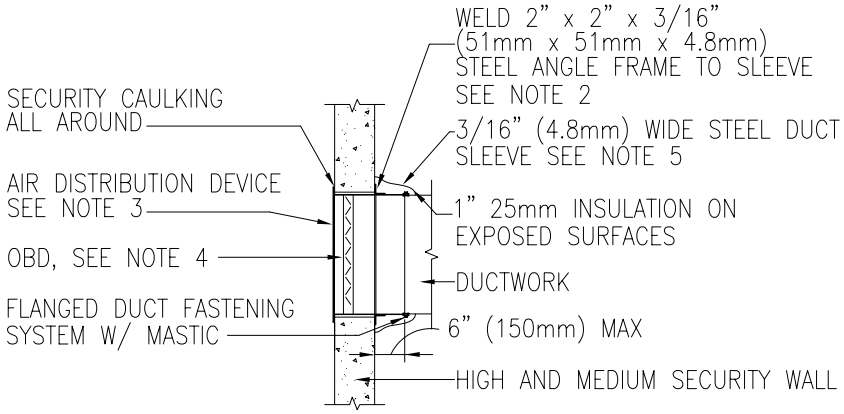

NOTES:

1. SECURITY BARRIERS ARE REQUIRED ON ALL PENETRATIONS IN "HIGH" AND "MEDIUM" SECURE WALLS, FLOORS, AND CEILINGS, WHERE OPENING IS LARGER THAN 8" X 8" (200 mm x 200 mm) OR LARGER THAN 5" (125 mm) SLIT. SECURITY BARRIERS ARE REQUIRED ON ALL PENETRATIONS 5" (125 mm) WIDE WHICH EXCEED 24" (600 mm) IN LENGTH.
2. SECURING ANGLES SHALL BEAR ON WALL A MINIMUM OF 1.5" (40mm) ALL AROUND. ANGLE WELDS TO SLEEVE SHALL BE 1/8" (3.2mm) WIDE 1" (25mm) IN LENGTH AND 4" (100mm) OC.
3. AIR DISTRIBUTION DEVICE SHALL BE FABRICATED OF 3/16" (4.8mm) WIDE STEEL PLATE WITH 1/4" (7.9mm) DIAMETER PERFORATIONS AND WHITE FINISH. DEVICE SHALL BE WELDED TO STEEL SLEEVE W/ 1/8" (3.2mm) WIDE CONTINUOUS WELDS ALL AROUND. USE FOR BOTH SIDEWALL AND CEILING APPLICATIONS. FACE PLATE SHALL BEAR ON WALL A MINIMUM OF 1.5" (40mm) ALL AROUND.
4. ATTACH OBD TO SLEEVE (OR DUCTWORK) WITH SHEET METAL SCREWS. DO NOT WELD. OBD SHALL BE ACCESSIBLE FROM FRONT BY A REMOVABLE KEY.
5. SHOP WELD SLEEVE ASSEMBLY. ALL SHOP WELDS SHALL BE CONTINOUS, 1/8" (3.2mm) WIDE (MIN).
6. SHOP PRIME SECURITY BARRIER PER PAINTING SPECIFICATIONS
7. SECURITY BARRIERS SHALL BE FABRICATED OF TOOL RESISTING STEEL.
8. PROVIDE AN ELBOW BEHIND UNDUCTED DIFFUSERS IN INMATE CELLS. * THESE ELBOWS ARE TO EXTEND 1-10" (560mm) IN AN UPWARD DIRECTION. *
9. ADDITIONAL BARRING NOT REQUIRED FOR THIS SECURITY BARRIER.

SECURE AIR DISTRIBUTION DEVICE @ DETAINEE ACCESSIBLE WALL

DETENTION CONSTRUCTION STANDARDS **SERVICE PROCESSING CENTER**

U.S. Immigration and Customs Enforcement	**REF NUMBER:**	**TITLE:**	**NUMBER**
	DATE: 08 OCTOBER 2004	SECURE AIR DISTRIBUTION DEVICE @ DETAINEE ACCESSIBLE WALL	**15-202**
	SCALE: NOT TO SCALE		File: 15-202.dwg

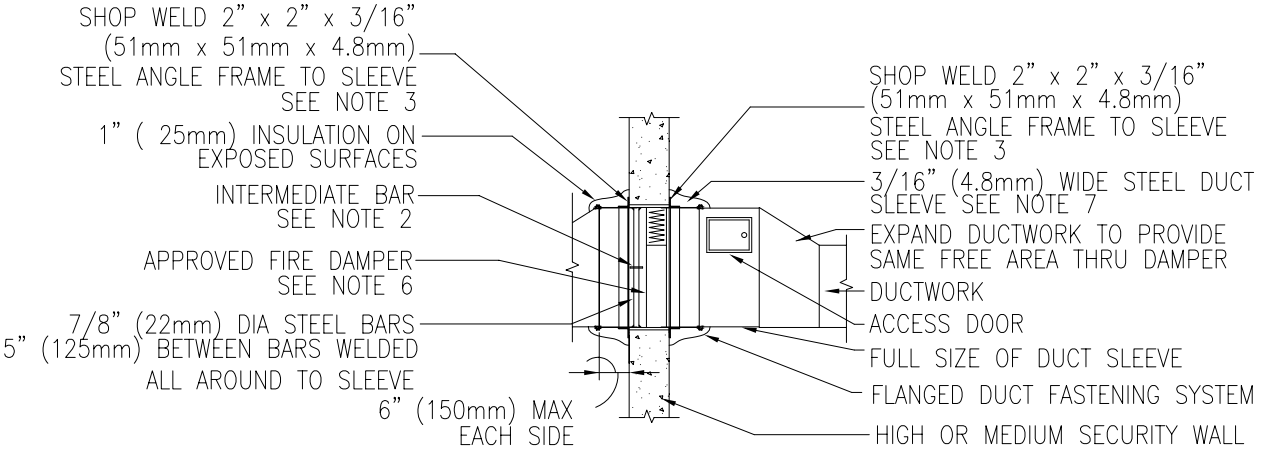

NOTES:

1. SECURITY BARRIERS ARE REQUIRED ON ALL PENETRATIONS IN "HIGH" AND "MEDIUM" SECURE WALLS, FLOORS, AND CEILINGS, WHERE OPENING IS LARGER THAN 8" X 8" (200 mm x 200 mm) OR LARGER THAN 5" (125 mm) SLIT. SECURITY BARRIERS ARE REQUIRED ON ALL PENETRATIONS 5" (125 mm) WIDE WHICH EXCEED 24" (600 mm) IN LENGTH.
2. BARS LONGER THAN 2'-0" (600 mm) SHALL BE PROVIDED WITH AN INTERMEDIATE FLAT BAR 2 1/2" X 3/8" (63.5mm x 9.5mm) WELDED ALL AROUND TO SLEEVE AND TACK WELDED TO BARS.
3. SECURING ANGLES SHALL BEAR ON WALL A MINIMUM OF 1.5" (40mm) ALL AROUND. FIELD ANGLE WELDS SHALL BE 1/8" (3.2mm) WIDE 1" (25mm) IN LENGTH AND 4" (100mm) OC (MIN).
4. LOCATE DAMPER IN THE PLANE OF THE WALL (OR OUTSIDE IF UL APPROVED). LOCATE SECURITY BARS BETWEEN RETAINING ANGLES. ENSURE THAT CLEARANCE BETWEEN BARS AND DAMPER IS SUFFICIENT FOR PROPER DAMPER OPERATION.
5. CLEARANCE BETWEEN WALL AND SLEEVE SHALL BE 1/8" (3.2mm) PER 1' (300 mm) (MAX) OF DAMPER SIZE.
6. DAMPER INSTALLATION SHALL CONFORM WITH PROVISIONS OF NFPA 90A AND MANUFACTURERS UL APPROVED INSTALLATION METHODS.
7. SHOP WELD SLEEVE ASSEMBLY. ALL SHOP WELDS SHALL BE CONTINUOUS, 1/8" (3.2mm) (MIN) WIDE.
8. SHOP PRIME IN ACCORDANCE WITH SPECIFICATION SECTION 09900 "PAINTING."
9. SECURITY BARRIERS SHALL BE FABRICATED OF TOOL RESISTING STEEL.

FIRE DAMPER "HIGH" AND "MEDIUM" SECURE WALL DUCT PENETRATION

DETENTION CONSTRUCTION STANDARDS **SERVICE PROCESSING CENTER**

U.S. Immigration and Customs Enforcement

REF NUMBER:	TITLE:	NUMBER
DATE: 08 OCTOBER 2004	FIRE DAMPER "HIGH" AND "MEDIUM" SECURE WALL DUCT PENETRATION	15-203
SCALE: NOT TO SCALE		File: 15-203.dwg