National Aeronautics and
Space Administration

DRAFT_VERSION 5

DATE: AUGUST 3, 2026

LUNAR REACTOR 1 – PHASE 1 TASK ORDER (LR-1 P1 TO)

STATEMENT OF WORK (SOW)

LUNAR REACTOR 1 (LR-1) DEVELOPMENT THROUGH HARDWARE-DRIVEN PRELIMINARY DESIGN REVIEW (PDR)

Publicly Available: Release to Public Websites Requires Approval of Chief, Office of Primary Responsibility, and approval via the Scientific and Technical Information (STI) process, if applicable

TABLE OF CONTENTS

SECTION **PAGE**

Table of Contents

1 INTRODUCTION 3
2 SYSTEM DEFINITION 4
2.1 KEY SUBSYSTEMS 4
2.2 CONCEPT OF OPERATIONS (LAUNCH INTEGRATION THROUGH END-OF-LIFE) 4
3 REQUIREMENTS 5
4 RELEVANT STANDARDS 11
5 TECHNICAL AND PROGRAMMATIC TASK DESCRIPTIONS 14
5.1 PDR LIFECYCLE MILESTONE REVIEW 14
5.2 ENGINEERING TEST UNIT 14
5.3 DATA REQUIREMENT DELIVERABLES (DRDS) 15
5.4 ETU DELIVERABLES 15
5.5 MEETINGS 15

APPENDIX A ACRONYMS AND ABBREVIATIONS 17

TABLE

TABLE 1 – RELEVANT DESIGN & CONSTRUCTION STANDARDS 11
TABLE A1-1 ACRONYMS AND ABBREVIATIONS 17

FIGURE

FIGURE 1 – EXAMPLE LR-1 SYSTEM BLOCK DIAGRAM 4
FIGURE 2 – LR-1 SHIELDING REQUIREMENT ILLUSTRATION 8

DRAFT

1 INTRODUCTION

The National Aeronautics and Space Administration (NASA) is developing nuclear systems for use in space and on the lunar surface. The Lunar Reactor 1 (LR-1) program will support NASA's strategic objectives by building the first operational fission reactor for the lunar surface, advancing U.S. fission power technologies, supporting upcoming lunar activities, and enabling future power generation capabilities in-space and on Mars.

Through the deployment of LR-1, solar-independent electrical power will be available to lunar surface assets. Lunar polar regions experience extended periods during which little to no sunlight is observed on the surface. Missions located at these polar regions will thus experience extended periods during which it is difficult for photovoltaic systems to produce and store sufficient power. LR-1 will provide a source of solar-independent power accessible to lunar surface assets, such as Moon Base, to assure mission success and crew safety.

LR-1 will be a 20 kW_e fission power system capable of at least 5 years of continuous, maintenance free operation, ready for launch by December 2030. The project is an initiative in response to Executive Order 14369 and National Space Technology Memorandum-3 (NSTM-3). This procurement will serve as the acquisition vehicle for the LR-1 Program to meet NASA's objectives in Executive Order (EO) 14369, Ensuring American Space Superiority, and NSTM-3, National Initiative for American Space Nuclear Power. The preliminary design and hardware demonstration procured within this contract will leverage and advance prior NASA Fission Surface Power projects and studies. Currently, only a design phase with hardware demonstrations is authorized.

This task is to be completed within 18 months of award and includes both non-nuclear hardware demonstrations and component-level radiation exposure testing. In the absence of defined program interface requirements, the LR-1 Phase 1 contractor is not expected to assure design compatibility with transportation or lunar surface assets such as utility rovers, communication relays, user interfaces, power grids, and any associated interoperability software. If authorized, follow-on tasks will be awarded to perform the subsequent phases to ready LR-1 for flight.

The contractor shall furnish all personnel, facilities, materials, services, and any other items and functions necessary to complete the work. Acceptance of the work by NASA will occur following the successful completion of the requirements and deliverables specified in this SOW and acceptance by the designated NASA project manager.

This Statement of Work (SOW) is structured in accordance with a tailored version of NASA project life-cycle phases as outlined in NPR 7120.5 for NASA Space Flight Program Management.

OBJECTIVES

NASA seeks clear hardware-based evidence that the key LR-1 subsystems can be assembled and operated at conditions representative of a potential future Lunar surface mission.

Objectives for Phase 1 of the LR-1 project are as follows:

Objective 1. Develop a PDR-level design for LR-1 that achieves the defined requirements and ensures the technology readiness is sufficient to proceed to flight system development.

Objective 2. Perform an electrically heated integrated system test in a relevant environment (as defined by the requirements) that incorporates representative versions of the key subsystems (an engineering test unit, ETU).

Objective 3. Perform component-level radiation exposure testing to demonstrate the LR-1 design will operate as intended within the induced (reactor) and natural (Lunar surface) radiation environments.

2 SYSTEM DEFINITION

2.1 Key Subsystems

The diagram in Figure 1 illustrates a candidate architecture for the LR-1 system. A successful LR-1 design will include subsystems which perform the tasks described in this section and is capable of providing 20 kW_e to a user on the Lunar surface.

LR-1 is a fission power system that utilizes closed-loop Brayton power conversion. The heat is provided by a reactor that utilizes high-assay low-enrichment uranium (HALEU). A shield is needed to reduce radiation dose from the reactor at the co-located subsystems, and at a distance where the power users may reside. The power conversion system (PCS) accepts heat from the reactor via a hot-side heat exchanger (HSHX) and transfers waste heat to a heat rejection system (HRS). The HRS includes thermal radiators that reject the waste heat to the Lunar environment in order to maintain the desired Brayton compressor inlet temperature. The Controller could work in tandem with the Power Management and Distribution (PMAD) that processes the Brayton output power and provides any electrical conversion needed to permit the power to be transmitted to the user. A Parasitic Load Radiator (PLR) may be used for Brayton speed control to maintain a constant load on the alternator regardless of the user power demand.

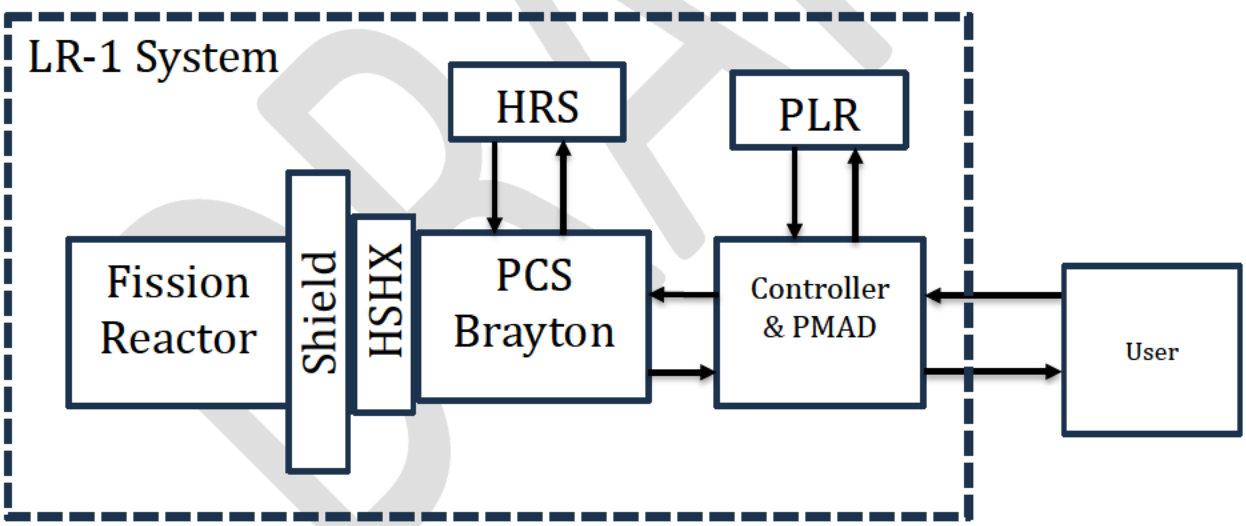

FIGURE 1 – EXAMPLE LR-1 SYSTEM BLOCK DIAGRAM

2.2 Concept of Operations (Launch Integration through End-of-Life)

This section describes the notional sequence of events for the LR-1 power system during its deployment, activation, surface operations, and end of life. These events are not within scope of Task Order 1 but are relevant to preliminary design work.

1. Deliver LR-1 to the launch integration facility in a flight certified, launch ready configuration.
2. Survive launch, transit, and lunar landing in a passive, fully safe state.
3. Be off-loaded from the lander and placed on the lunar surface.
4. Perform a controlled startup to achieve a stable operating condition with electric power shunted by a Parasitic Load Radiator.
5. Demonstrate LR-1 functionality including the ability of the system to achieve the prescribed operating states (as defined by the requirements).
6. Deliver power to an electrical interface that allows the power to be transmitted to remotely located users.
7. Shut down safely at mission completion and enter a long-term, passive safe state.

3 REQUIREMENTS

The contractor shall design the LR-1 system to meet the requirements as defined herein.

Single Reactor Design

LR1-1: LR-1 shall utilize a single reactor.

Rationale: A single reactor design is critical to reduce risk and ensure extensibility to higher power systems. Power capacity is expected to be maximized such that LR-1 can be delivered on one lunar lander, including all the equipment needed to deploy and operate it.

Power Delivery After a Failure

LR1-2: LR-1 shall continue to provide no less than 20 kWe at the power output location after a single failure within the LR-1 system.

Rationale: NASA seeks to demonstrate an LR-1 system that maximizes power output with failure tolerance. This will ensure continued power delivery to meet a minimum projected power demand. This may be accomplished through approaches including, but not limited to, operational adjustments, oversizing components, or redundancy.

Electrical Interface

LR1-3: LR-1 shall provide a 3-kV_{RMS} power output.

Rationale: Provides the proper interface for the planned users (such as Moon Base), which will have to transmit the LR-1 output power at least 1 km to the intended use point.

Fuel Type

LR1-4: The LR-1 reactor shall utilize High-Assay Low-Enriched Uranium (HALEU) fuel.

Rationale: The use of HALEU leverages on-going developments for terrestrial micro-reactors.

- Note: NASA has coordinated with DOE for an allocation of HALEU. The contractor is responsible for submitting the proper application through DOE to acquire the HALEU fuel.

Power Conversion

LR1-5: LR-1 shall utilize closed Brayton cycle power conversion.

Rationale: Brayton power conversion is projected to deliver stable, reliable power, and extensibility to larger systems necessary for future NASA missions including nuclear electric propulsion.

Design Life

LR1-6: LR-1 shall be designed to operate continuously at full power output, on the Lunar surface, for a minimum of 5 years without maintenance from the time of deployment.

Rationale: 5 years represents the upper limit of what lunar surface elements can feasibly be expected to perform given the lunar surface environment. Operational life can be verified through analysis.

Operational Environment

LR1-7: LR-1 shall be designed for operation at the lunar south pole within 84°S and 90°S latitude, where the lunar environment is defined by M2M-30159, "Moon to Mars Design Specification for Natural Environments (DSNE)".

LR1-8: LR-1 shall be designed for slopes up to 10 degrees.

LR1-9: LR-1 shall be designed for darkness periods of at least 354 hours without communication to Earth.

Rationale: The Lunar South pole Region is defined by M2M-30159, Moon to Mars Design Specification for Natural Environments (DSNE) and represents the targeted area for initial Artemis exploration sites.

Automatic Operation

LR1-10: LR-1 shall operate automatically to provide continuous power delivery after initial startup.

Rationale: Removes LR-1's dependency on continuous or real-time communications networks during operations. Contractors will need to assess operational phases which should be dependent on real-time commands, such as initial deployment.

System Restarts

LR1-11: LR-1 shall restart without external power.

Rationale: The contractor will need to assess the need for restarts that could potentially occur during extended periods of darkness. This capability does not pertain to the initial startup of LR-1.

Power Shunt

LR1-12: LR-1 shall shunt any power not taken by the user load.

Rationale: LR-1 is expected to support varying user power demands.

Mass

LR1-13: LR-1 shall not exceed 15 t, inclusive of all adapters and harnesses for the lander.

Rationale: Provides an upper bound for mass based on projected lander availability.

Volume

LR1-14: While in the stowed configuration (undeployed state), LR-1 shall not exceed a dynamic volumetric envelope of 4.57-meter (179.9 inch) diameter cylinder with a 7.8-meter (307 inch) height.

Rationale: Provides an upper bound for volume based on projected lander availability.

Orbital Debris Mitigation

LR1-15: LR-1 shall demonstrate, via failure modes and effects analyses, probabilistic risk assessments, or other appropriate analyses, that the integrated probability of breakup for all credible failure modes is less than 0.001 (excluding small particle impacts).

Rationale: Limiting the risk to other space systems from accidental breakup during deployment and mission operations while in orbit about Earth or the Moon or on the lunar surface. This requirement will not only support LR-1 compliance but also launch vehicle compliance with NASA's orbital debris requirements.

Safety

LR1-16: LR-1 shall be designed to minimize radiation footprint at end of life through a permanent reactor shutdown.

Rationale: Shutdown of the reactor at the end of life enables future proximity operations by halting the creation of fission products and removing stored energy.

LR1-17: LR-1 shall be designed to deplete and/or control all sources of stored energy when no longer required for mission operations or post mission disposal.

Rationale: Design for passivation of the system through depletion burns, venting, system disconnects, and/or discharge of stored energy sources after completion of mission operations or end of life of the system. Minimize the probability of accidental release or deflagration large enough to break up the system after completion of mission operations or end of life of the system. This includes the ability to ensure the reactor remains in a subcritical state.

Habitation Zone Radiation Exposure

LR1-18: LR-1 shall be designed to limit radiation dose rate to no greater than 5 rem per year above the lunar background radiation at a distance no greater than 1 km within a prescribed cone angle and no greater than 50 rem per year above the lunar background radiation at that distance outside the prescribed cone angle, as shown in Figure 2.

DRAFT

Rationale: The notional habitation zone is assumed to be a 1 km diameter circular region with a center point 1.5 km away from the reactor, resulting in the boundaries shown in Figure 2. The actual reactor separation distance may be less than 1 km, provided that the resulting cone angle fully subtends the 1 km diameter notional habitation zone. The radiation calculation should assume an evenly distributed dose rate to an unshielded crew member at the notional user location. The radiation calculation should assume a flat surface with no geographic features. The exact location of the reactor and the relative direction of the user interface will be determined at a future date. The 5 rem/yr limit needs to be met for both nominal and off-nominal operations. The lunar background radiation is specified in Section 3.3.1 of the M2M-30159, Moon to Mars Design Specification for Natural Environments (DSNE).

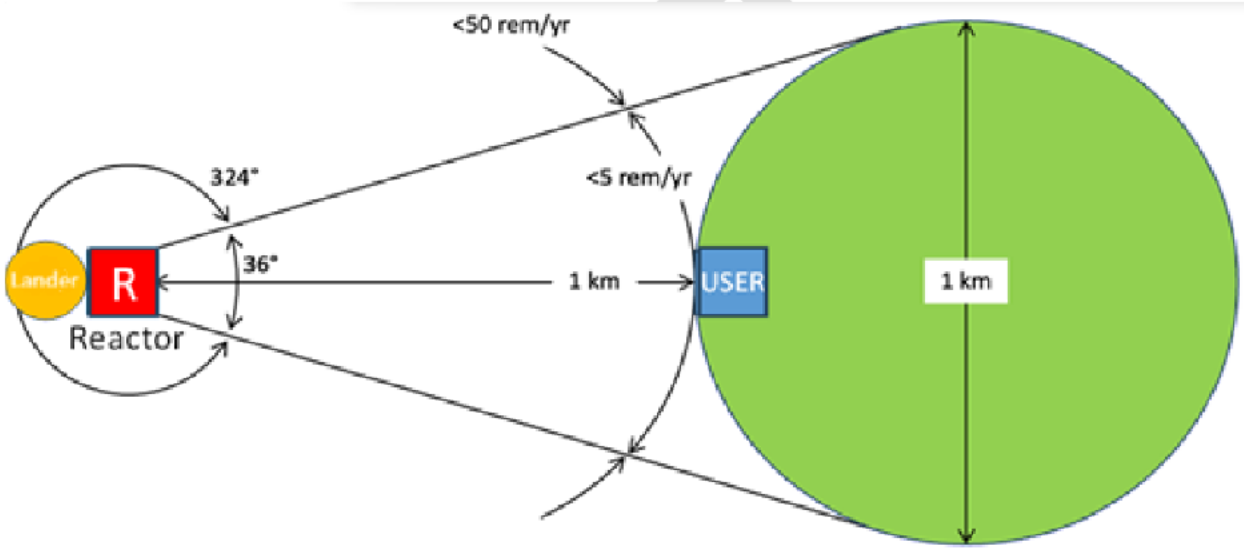

FIGURE 2 – LR-1 SHIELDING REQUIREMENT ILLUSTRATION

Single Failure Tolerance to Catastrophic Events

LR1-19: LR-1 shall be designed to provide at least single failure tolerance to catastrophic events.

Rationale: A Catastrophic event is any event which may cause death, permanent disabling injury, significant environmental impact, total loss of facilities, loss of mission or loss of a lunar asset. Control of catastrophic events ensures proper handling of system hazards to prevent such risks. Specific approaches to failure tolerance and implementation must be derived via an integration of the design and safety analyses. See NASA-STD-8719.29 for strategies for implementing failure tolerance.

Emergency Shutdown

LR1-20: LR-1 shall be designed to enable a commanded shutdown state of the reactor.

Rationale: An emergency shutdown should initiate a safe shutdown of the reactor either from ground command or the lunar surface (crew). Local control supports the crew in self-management of risks in the event they receive an alert of an impending hazard, and the ground is unable to act, or communication is lost. Additional controls may be made available at the Contractor's discretion, but the minimum is an emergency stop to neutralize the hazard.

Fault Annunciation

LR1-21: LR-1 shall be designed to provide the capability to annunciate detected faults to Lunar assets that affect critical systems, subsystems, or crew health.

Rationale: It is necessary to alert the crew/operator to faults (not just failures) that affect critical functions.

Fault Detection, Isolation, and Recovery

LR1-22: LR-1 shall be designed to automatically detect, isolate, and recover from faults.

Rationale: The LR-1 design is expected to provide isolation and recovery from faults. This may be accomplished through approaches including, but not limited to, redundancy or part isolation.

LR1-23: LR-1 shall have two independent methods of detecting faults that lead to catastrophic hazards.

Rationale: Provides a second means of detecting faults leading to catastrophic events. Independent detection could involve, but is not limited to, redundant data, secondary information sources, dissimilar detection logic, or oversight capabilities.

Radiation Monitoring

LR1-24: LR-1 shall be designed to include, at a minimum, continuous radiation monitoring sensors at the power output location.

Rationale: Continuous In-situ monitoring of radiation is required to support crew operations and monitor system performance.

Cyber Security

LR1-25: LR-1 shall be considered a federal information system and comply with NIST SP 800-53 "Security and Privacy Controls for Information Systems and Organizations" An equivalent certification may be acceptable if proposed.

Rationale: The National Institute of Standards and Technology (NIST) develops cybersecurity standards, guidelines, best practices, and other resources to meet the needs of U.S. industry, federal agencies, and the broader public.

Electrical, Electronic, and Electromechanical (EEE) Parts Assurance

LR1-26: LR-1 shall be designed to use grade 1 parts.

Rationale: Grade 1 EEE parts typically meet the highest reliability standards and have been subjected to independent verification. Additionally, Grade 1 parts are manufactured with the greatest amount of element evaluation, traceability, in-process testing and final screening as compared to other parts of the same type, but different reliability grades. Military specification documents (e.g. MIL-PRF 19500P, Semiconductor Devices, General Specification For) describe the Grade 1 designation level as being intended for space applications. Lower grade parts can be used in the design when higher grade parts are unavailable, not in critical systems, or approved by NASA.

Nuclear Launch Authorization

LR1-27: LR-1 shall comply with NSPM-20 "National Security Presidential Memorandum on the Launch of Spacecraft Containing Space Nuclear Systems", Space Policy Directive-6 (SPD-6) "National Strategy for Space Nuclear Power and Propulsion" and NPR 8715.26 "NASA Nuclear Flight Safety".

Rationale: NSPM-20 defines the compliance process for U.S. spacecraft launches involving nuclear systems. SPD-6 establishes the U.S. national strategy for the development and use of space nuclear power and propulsion systems to advance scientific, exploration, national security, and commercial objectives. NPR 8715.26 implements NASA's nuclear flight safety policy, requiring protection of the public, workforce, assets, and environment by embedding safety into all activities and operations.

LR1-28: LR-1 shall be designed to prevent inadvertent reactor criticality using two independent hardware methods for both normal and accident conditions in accordance with the safety guidelines identified in NSPM-20.

Rationale: Per NSPM-20, the U.S. shall develop and use space nuclear systems when such systems safely enable or enhance space exploration or operational capabilities. Designing a reactor to prevent inadvertent criticality minimizes radiation hazards. Potential launch accident scenarios should include, but are not limited to, dry land, wet sand, water (ocean).

LR1-29: The Contractor shall adopt a safety process that is similar to the Payload Safety Process in NPR 8715.7 Payload Safety Program and NASA-STD-8719.24 Payload Safety.

Rationale: LR-1 is expected to operate safely in all phases of development, test, and operations. This should include a robust safety review process to ensure safety is designed into the system. The contractor is expected to provide data in support of the governments phased safety review process.

Department of Energy (DOE) Requirements

LR1-30: LR-1 shall be designed to comply with the standards provided below. The Contractor may propose equivalent requirements in lieu of these or propose tailoring of these requirements as appropriate.

- DOE-STD-1271-2025 Authorization Pathway for Nuclear Facilities

  Note: DOE-STD-1271-2025 Attachment 2 contains information related to fuel qualification, safety limits and systems, autonomous operation, and reactivity control.

While not requirements, DOE-STD-1271-2025 Attachment 2 information should be considered as reference information, as the information may be relevant to meeting the standards listed in Table 1.

- DOE O 414.1 Quality Assurance
- DOE O 420.1 Facility Safety
- DOE-STD-1237-2021 Documented Safety Analysis for DOE Reactor Facilities

While not applicable to TO-1, the LR-1 system shall be designed to meet the following standards while operating on the lunar surface:

- DOE O 225.1 Accident Investigations
- DOE O 231.1B Environment, Safety and Health Reporting
- DOE O 232.2 Occurrence Reporting and Processing of Operations Information
- DOE O 442.1B Department of Energy Employee Concerns Program
- DOE O 422.1 Conduct of Operations

Rationale: All terrestrial activities including, but not limited to, nuclear ground testing, fabrication, storage, and transportation of nuclear materials are subject to federal regulations of nuclear materials and reactors.

Operating States

LR1-31: LR-1 shall have defined operation states that describe the available power output for various system operating conditions including full power, partial power, warm standby, and shutdown as a minimum.

Rationale: NASA may choose to adjust LR-1 power output in relation to mission needs and radiation constraints. Full power could be based on the maximum electric power that can be delivered to the electrical interface. Partial power could be based on operating the system at the minimum electric power to assure LR-1 health and safety (e.g., keeping fluids from freezing). Warm standby could maintain the reactor in a critical state at a nominal temperature to allow an efficient transition to electric power production. Shutdown should be based on the reactor being sub-critical and no electrical power being generated. Other operation states could be defined by the provider.

4 RELEVANT STANDARDS

The following design and construction (D&C) standards are deemed by the LR-1 engineering team to be relevant for the LR-1 system and will be imposed on the flight design. Use of an alternative standard, or tailoring of these standards, can be proposed by the contractor which will be subject to approval by the NASA program manager via the initial proposal review process.

TABLE 1 – RELEVANT DESIGN & CONSTRUCTION STANDARDS

Document Number	Title
10 CFR Part 71	Packaging And Transportation Of Radioactive Material

Document Number	Title
AIAA S-080A-2018	Metallic Pressure Vessels, Pressurized Structures, And Pressure Components
AIAA S-081B-2018	Composite Overwrapped Pressure Vessels (COPV)
AIAA-S-110A	Space Systems—Structures, Structural Items, and Pressurized Structures
AIAA S-120A-2015	Mass Properties Control For Space Systems
ANSI/ESD S20.20 (2014)	For the Development of an Electrostatic Discharge Control Program for - Protection of Electrical and Electronic Parts, Assemblies and Equipment (Excluding Electrically Initiated Explosive Devices)
ASTM E595-15	Low Outgassing In A Vacuum Environment
DOE O 420.1	Facility Safety
IEC 61000-4-2 Edition 2.0 (2008)	Electromagnetic Compatibility (EMC) Testing and Measurement Techniques-Electrostatic Discharge Immunity Test for Human Body Model (HBM) subassemblies, assemblies and equipment discharge levels
IPC-2220 Rev A	Sectional Design Standard for High Density Interconnect (HDI) Printed Boards
IPC-6010 Rev C	Qualification and Performance Specification for High Frequency (Microwave) Printed Boards
JSC-20793 Rev D	Crewed Space Vehicle Battery Safety Requirements
JSC-64399 Rev A	Handbook for Designing MMOD Protection
JSC 65828	Structural Design Requirements And Factors Of Safety For Spaceflight Hardware
MIL-STD-1522A	General Requirements for Safe Design and Operation of Pressurized Missile and Space Systems
MIL-STD-1576 (1984)	Electroexplosive Subsystem Safety Requirements and Test Methods for Space Systems
MIL-STD-461	Requirements For The Control Of Electromagnetic Interference Characteristics Of Subsystems And Equipment
MIL-STD-464	Electromagnetic Environmental Effects Requirements For Systems
MIL-STD-981 Rev C w/ Change 2	Design, Manufacturing and Quality Standards for Custom Electromagnetic Devices for Space Applications
MSFC-SPEC-3746	Flow-Induced Vibration Assessment Requirements For Metal Bellows And Flexhoses
NASA-HDBK-4008 Baseline w/ Change 1	Programmable Logic Devices Handbook
NASA-STD-1006	Space System Protection Standard
NASA-STD-1008	Testing Systems And Hardware To Be Exposed To Dust In Planetary Environments

DRAFT

Document Number	Title
NASA-STD-4003	Electrical Bonding For NASA Launch Vehicles, Spacecraft, Payloads, and Flight Equipment
NASA-STD-5001	Structural Design And Test Factors Of Safety For Spaceflight Hardware
NASA-STD-5002	Load Analyses Of Spacecraft And Payloads
NASA-STD-5005	Design And Fabrication Of Ground Support Equipment
NASA-STD-5006	General Welding Requirements For Aerospace Materials
NASA-STD-5009	Nondestructive Evaluation Requirements For Fracture Critical Metallic Components
NASA-STD-5017	Design And Development Requirements For Mechanisms
NASA-STD-5018	Strength Design And Verification Criteria For Glass, Ceramics, And Windows
NASA-STD-5019	Fracture Control Requirements For Spaceflight Hardware
NASA-STD-5020	Requirements For Threaded Fastening Systems In Spaceflight Hardware
NASA-STD-6001	Flammability, Offgassing, And Compatibility
NASA-STD-6012	Corrosion Protection For Space Flight Hardware
NASA-STD-6016	Standard Materials And Processes Requirements For Spacecraft
NASA-STD-7001	Payload Vibroacoustic Test Criteria
NASA-STD-7002	Payload Test Requirements
NASA-STD-7009	Standard For Models And Simulations
NASA-STD-7012	Leak Test Requirements
NASA-STD-8719.14	Process For Limiting Orbital Debris
NASA-STD-8719.24	Payload Safety Requirements
NASA-STD-8719.25	Range Flight Safety Requirements
NASA-STD-8719.27	Implementing Planetary Protection Requirements For Space Flight
NASA-STD-8719.9	Classifications and Requirements for Testing Systems and Hardware To Be Exposed To Dust In Planetary Environments
NASA-STD-8739.6 Rev A w/ Change 1	Workmanship Standards
NASA-STD-8739.10	Electrical, Electronic, And Electromechanical (EEE) Parts Assurance Standard
SMC-S-010	Parts, Materials, And Processes (PMP) Technical Requirements For Space And Launch Vehicles
SMC-S-016	Test Requirements For Launch, Upper-Stage And Space Vehicles
SMC-S-024	Test Requirements For Ground Systems

DRAFT

5 TECHNICAL AND PROGRAMMATIC TASK DESCRIPTIONS

The contractor shall perform the engineering design and analysis to produce a viable LR-1 system design sufficient for a PDR occurring at the end of this task. The contractor shall perform the work necessary to support the meetings and produce the deliverables described in the following sections. The scope of this work includes but is not limited to: regular monthly reports, test readiness review(s), presentations for various meetings, schedule composition, requirements decomposition, perform trade studies and analyses, document the design (via drawings, solid models, assembly procedures), identify needed technology development, document risks and mitigations. This task also includes hardware demonstrations as described below.

5.1 PDR Lifecycle Milestone Review

The contractor shall conduct a PDR in accordance with contractor defined Major Review Plans and Documentation as referenced in the Project Management Plan deliverable. The contractor may refer to and/or utilize a tailored approach to the PDR entrance and success criteria defined in NPR 7123.1 Systems Engineering Processes and Requirements.

5.2 Engineering Test Unit

A primary objective of this phase is to design, build, and test a non-nuclear Engineering Test Unit (ETU) that incorporates the key subsystem technologies needed for a future LR-1 flight system. In addition to the contractor satisfying the typical criteria for PDR-level design work, NASA expects to see clear hardware-based evidence that the major subsystems can be assembled and operated at conditions representative of the future flight mission including thermal-vacuum testing as necessary to verify system-level performance. NASA also expects a detailed ETU Test Plan in accordance with the Test Plans for ETU deliverable. The goal of the ETU demonstration is proof of the contractor's readiness to move forward with the final flight system design.

The major LR-1 subsystems to be demonstrated in the ETU include the reactor heat transport, power conversion, heat rejection, and power management and distribution (PMAD). A successful ETU would include high-fidelity prototypes that are integrated into a system and operated to demonstrate overall performance in a relevant thermal-vacuum environment. The ETU components should be full-scale and provide flight-like functionality, even if they don't fully match the flight unit size, weight, and design life. Realistic support elements should be provided to mimic critical thermal and electrical interfaces, including the nuclear aspects of the reactor and the downstream electrical attributes of a lunar power grid. An electrically-heated "reactor simulator" should deliver the required heat to the PCS at the proper temperature and respond to transients in a similar manner to the actual reactor. If the proposed flight system design uses parallel power strings, the ETU may require only one full-scale string presuming that string operates as a fully-independent element in the flight design. Detailed analytical models should be developed, and test data collected to validate those models. The ETU should be operated over a broad range of design, off-design, and potential faulted conditions to demonstrate resiliency. The test results should provide clear evidence to permit accurate component, subsystem, and system performance projections for subsequent development phases.

A separate radiation test campaign should address both the ETU components (i.e., electronics, avionics, heat pipes, alternators, pumps, coatings, epoxies, instrumentation and controls) and other LR-1 nuclear components not included in the ETU such as the reactor fuel, moderator,

neutron reflector, control elements, control drives, criticality safety mechanisms, and reactor instrumentation. Dedicated radiation exposure testing should be performed to the extent required to prove the design will perform as intended in the lunar environment for the required lifetime. This testing should include all sources of radiation, including induced radiation from the LR-1 reactor and natural space radiation present on the Lunar surface.

5.3 Data Requirement Deliverables (DRDs)

DRDs specific to this task order are referenced in the Contract Data Requirements List (CDRL). Refer to the attached CDRL for the comprehensive list of deliverables expected for Task Order 1.

5.4 ETU Deliverables

NASA retains the right to accept all ETU hardware and software produced under this contract. The major hardware elements from Task Order 1 include the ETU and the radiation test articles. A preliminary list of required deliverables is provided below. The ETU may be delivered as a complete assembly or as subsystems, at NASA's discretion. The contractor will be responsible for disposition of radioactive test articles.

1) Electrically-heated reactor simulator
2) Reactor heat transport assembly
3) Brayton power conversion unit(s)
4) HRS including radiator(s) and fluid loop(s)
5) PMAD equipment including any electrical load simulators
6) ETU data acquisition and control software
7) Any other test support equipment needed to assemble or operate the ETU

5.5 Meetings

The contractor shall support the meetings described below. Meeting dates are to be finalized during contract negotiations and durations are approximate.

Month (after Authority To Proceed)	Meeting Name	Location
1	Kickoff & Planning Review	Contractor
3	System Requirements Review	Virtual
As Needed	Test Readiness Review(s)	Contractor

Month (after Authority To Proceed)	Meeting Name	Location
Monthly / Quarterly	Project Management Review	Virtual (monthly) / Contractor (quarterly)
As Needed	Technical Interchange Meetings (TIMs) (up to 6 as needed)	Virtual or in person
As Needed	Hardware Demo(s)	Contractor
18	Preliminary Design Review	NASA GRC

DRAFT

APPENDIX A
ACRONYMS AND ABBREVIATIONS

A1.0 Acronyms and Abbreviations

TABLE A1-1 Acronyms and Abbreviations

Acronym	Full Term
AIAA	American Institute of Aeronautics and Astronautics
ANSI	American National Standards Institute
ASTM	American Society for Testing and Materials
CDRL	Contract Data Requirement List
CFR	Code of Federal Regulations
COPV	Composite Overwrapped Pressure Vessels
CUI	Controlled Unclassified Information
D&C	Design and construction
DOE	Department of Energy
DRD	Data Requirement Deliverable
DSNE	Design Specification for Natural Environments
EEE	Electrical Electronics Electromechanical
EMC	Electromagnetic Compatibility
EO	Executive Order
ESD	Electrostatic Discharge
ETU	Engineering Test Unit
GRC	Glenn Research Center
HALEU	High-Assay Low-Enriched Uranium
HBM	Human Body Model
HDBK	Handbook
HDI	High Density Interconnect
HRS	Heat Rejection System
HSHX	Heat Source Heat Exchanger
IEC	International Electrotechincal Commission
IPC	Institute for Interconnecting and Packaging Electronic Circuits / Association Connecting Electronics Industries
IT	Information Technology
JSC	Johnson Space Center

DRAFT

TABLE A1-1 Acronyms and Abbreviations

Acronym	Full Term
km	kilometer
kV_{RMS}	kilovolt root mean square
kW_e	kilowatt electrical
LR-1	Lunar Reactor 1
M2M	Moon-to-Mars
MIL	military
MMOD	Micro-Meteoroid Orbital Debris
MSFC	Marshall Space Flight Center
NASA	National Aeronautics and Space Administration
NIST	National Institute of Standards and Technology
No.	number
NPR	NASA Procedural Requirement
NSPM	National Security Presidential Memo
NSTM	National Space Technology Memorandum
O	order
P1	Phase 1
PCS	Power Conversion System
PDR	Preliminary Design Review
PLR	Parasitic Load Radiator
PMAD	Power Management and Distribution
PMP	Parts, Materials, and Processes
PRF	Performance Requirement Specification
rem	Roentgen Equivalent Man
RFP	Request for Proposal
SMC	Space and Missiles Systems Center
SOW	Statement of Work
SPD	Space Policy Directive
SPEC	Specification
STD	Standard
STI	Scientific and Technical Information
t	tonnes (metric tons)

DRAFT

TABLE A1-1 Acronyms and Abbreviations

Acronym	Full Term
TO	Task Order
U.S.	United States of America
yr	year

DRAFT