Embajada de los Estados Unidos
en Guatemala

August 3, 2026

Dear Prospective Quoter:

Subject: Request for Quotations number 19GT5026Q0057

Enclosed is a Request for Quotations (RFQ) for Preventive Maintenance Services for Potable Treatment Plant. If you would like to submit quotation, follow the instructions in Section 3 of the solicitation, complete the required portions of the attached document, and submit it to the address shown on Standard Form 1449 that follows this letter.

The U.S. Government intends to award a contract to the responsible company submitting an acceptable offer at the lowest price. We intend to award a contract based on initial quotations, without holding discussions, although we may hold discussions with companies in the competitive range if there is a need to do so.

The Embassy intends to conduct a pre-quotation conference at the site **on Tuesday, August 18, 2026, at 9:30am (local time**) at the US Embassy Guatemala located in Boulevard Austriaco 11-51, Zona 16**.** Prospective offerors/quoters should contact Ingrid Cifuentes at CifuentesIG@state.gov by **Wednesday, August 12, 2026 by 12:00pm** for additional information or to arrange entry to the building.

Quotations are due by Friday, September 11, 2026, at 5:00pm (local time). No quotations will be accepted after this time. Proposals must be in English and incomplete proposals will not be accepted.

Your quotation must be submitted electronically to GuatemalaBids@state.gov It is important to make sure the submission is made in Adobe Acrobat (pdf) file format. The file size must not exceed 30MB. If the file size should exceed 30MB, the submission must be made in separate files and attached to separate emails with less than 30MB each.

For a quotation to be considered, you must also complete and submit the following:
1. SF-1449
2. Section I, Pricing
3. Section 5 Representations and Certifications
4. Additional information as required in Section 3
5. The Offeror should submit a completed IRS Form W-14, found at www.irs.gov/w14, to ensure compliance with FAR 52.229-11
6. Proof of SAM Registration

Offerors shall be registered in the SAM (System for Award Management) database at https://www.sam.gov prior to submittal of their offer/proposal as prescribed under FAR 4.1102. Failure to be registered at time of proposal submission may deem the offeror's proposal to be considered non-responsible and no further consideration will be given. Therefore, offerors are highly encouraged to register immediately if they are interested in submitting a response to this requirement.

Sincerely,

Scott Dargus
Contracting Officer

SOLICITATION/CONTRACT/ORDER FOR COMMERCIAL ITEMS

OFFEROR TO COMPLETE BLOCKS 12, 17, 23, 24, & 30

			1. REQUISITION NUMBER PR16120431	PAGE 1 OF 107 PAGES
2. CONTRACT NO.	3. AWARD/ EFFECTIVE DATE	4. ORDER NUMBER	5. SOLICITATION NUMBER 19GT5026Q0057	6. SOLICITATION ISSUE DATE 08/03/2026
7. FOR SOLICITATION INFORMATION CALL: ▶	a. NAME Ingrid G Cifuentes		b. TELEPHONE NUMBER(No collect calls) +502 2371-9635	8. OFFER DUE DATE/ LOCAL TIME

9. ISSUED BY CODE GT500
AMERICAN EMBASSY GUATEMALA CITY
Boulevard Austriaco 11-51, Zona 16, ATTN: GSO - PROCUREMENT SECTION
Guatemala
GUATEMALA

10. THIS ACQUISITION IS ☐ UNRESTRICTED OR ☐ SET ASIDE: _____ % FOR:
☐ SMALL BUSINESS ☐ WOMEN-OWNED SMALL BUSINESS
☐ HUBZONE SMALL BUSINESS ☐ (WOSB) ELLIGIBLE UNDER THE WOMEN-OWNED SMALL BUSINESS PROGRAM NAICS:
☐ SERVICE-DISABLED VETERAN-OWNED ☐ EDWOSB ☐ EMERGING SMALL BUSINESS
☐ 8 (A) SIZE STANDARD:

11. DELIVERY FOR FOB DESTINATION UNLESS BLOCK IS MARKED ☐

12. DISCOUNT TERMS

13a. THIS CONTRACT IS A RATED ORDER UNDER DPAS (15 CFR 700)

13b. RATING

14. METHOD OF SOLICITATION
☐ x RFQ ☐ IFB ☐ RFP

15. DELIVER TO CODE
AMERICAN EMBASSY GUATEMALA CITY
Boulevard Austriaco 11-51 Zona 16, ATTN: GSO
GUATEMALA CITY
GUATEMALA

16. ADMINISTERED BY CODE
AMERICAN EMBASSY GUATEMALA CITY
Boulevard Austriaco 11-51, Zona 16, ATTN: GSO - PROCUREMENT SECTION
Guatemala
GUATEMALA

17a. CONTRACTOR/ OFFERER CODE FACILITY CODE

18a. PAYMENT WILL BE MADE BY CODE
AMERICAN EMBASSY GUATEMALA CITY
1A. AVENIDA 7-41, ZONA 10, ATTN: CASHIER
GUATEMALA
GUATEMALA

☐ 17b. CHECK IF REMITTANCE IS DIFFERENT AND PUT SUCH ADDRESS IN OFFER

18b. SUBMIT INVOICES TO ADDRESS SHOWN IN BLOCK 18a UNLESS BLOCK BELOW IS CHECKED ☐ SEE ADDENDUM

19. ITEM NO.	20. SCHEDULE OF SUPPLIES/SERVICES	21. QUANTITY	22. UNIT	23. UNIT PRICE	24. AMOUNT
	(Use Reverse and/or Attach Additional Sheets as Necessary)				

25. ACCOUNTING AND APPROPRIATION DATA

26. TOTAL AWARD AMOUNT *(For Govt. Use Only)*

☐ x 27a.SOLICITATION INCORPORATES BY REFERENCE FAR 52.212-1, 52.212-4. FAR 52.212-3 AND 52.212-5 ARE ATTACHED. ADDENDA ☐ x ARE ☐ ARE NOT ATTACHED

☐ 27b.CONTRACT/PURCHASE ORDER INCORPORATES BY REFERENCE FAR 52.212-4. FAR 52.212-5 IS ATTACHED. ADDENDA ☐ ARE ☐ ARE NOT ATTACHED

☐ 28. CONTRACTOR IS REQUIRED TO SIGN THIS DOCUMENT AND RETURN ___ COPIES TO ISSUING OFFICE. CONTRACTOR AGREES TO FURNISH AND DELIVER ALL ITEMS SET FORTH OR OTHERWISE IDENTIFIED ABOVE AND ON ANY ADDITIONAL SHEETS

☐ 29. AWARD OF CONTRACT: REF. _____ OFFER DATED _____. YOUR OFFER ON SOLICITATION (BLOCK 5), INCLUDING ANY ADDITIONS OR CHANGES WHICH ARE SET FORTH HEREIN, IS ACCEPTED AS

30a. SIGNATURE OF OFFEROR/CONTRACTOR

31a. UNITED STATES OF AMERICA *(SIGNATURE OF CONTRACTING OFFICER)*

30b. NAME AND TITLE OF SIGNER *(Type or print)*

30c. DATE SIGNED

31b. NAME OF CONTRACTING OFFICER *(Type or print)*

31c. DATE SIGNED

AUTORIZED FOR LOCAL REPRODUCTION

PREVIOUS EDITION IS NOT USABLE

Computer Generated

STANDARD FORM 1449 (REV. 02/2012)

Prescribed by GSA - FAR (48 CFR) 53.212

ITEM NO.	20. SCHEDULE OF SUPPLIES/SERVICES	21. QUANTITY	22. UNIT	23. UNIT PRICE	24. AMOUNT

32a. QUANTITY IN COLUMN 21 HAS BEEN

☐ RECEIVED ☐ INSPECTED ☐ ACCEPTED, AND CONFORMS TO THE CONTRACT, EXCEPT AS NOTED:

32b. SIGNATURE OF AUTHORIZED GOVERNMENT REPRESENTATIVE	32c. DATE	32d. PRINTED NAME AND TITLE OF AUTHORIZED GOVERNMENT REPRESENTATIVE

32e. MAILING ADDRESS OF AUTHORIZED GOVERNMENT REPRESENTATIVE	32f. TELEPHONE NUMBER OF AUTHORIZED GOVERNMENT REPRESENTATIVE 32g. E-MAIL OF AUTHORIZED GOVERNMENT REPRESENTATIVE

33. SHIP NUMBER ☐ PARTIAL ☐ FINAL	34. VOUCHER NUMBER	35. AMOUNT VERIFIED CORRECT FOR	36. PAYMENT ☐ COMPLETE ☐ PARTIAL ☐ FINAL	37. CHECK NUMBER
38. S/R ACCOUNT NO.	39. S/R VOUCHER NO.	40. PAID BY		

41.a. I CERTIFY THIS ACCOUNT IS CORRECT AND PROPER FOR PAYMENT		42a. RECEIVED BY *(Print)*	
41b. SIGNATURE AND TITLE OF CERTIFYING OFFICER	41C. DATE	42b. RECEIVED AT *(Location)*	
		42c. DATE REC'D *(YY/MM/DD)*	42d. TOTAL CONTAINERS

TABLE OF CONTENTS

SECTION 1 - THE SCHEDULE

- SF 1449 cover sheet
- Continuation To SF-1449, **RFQ 19GT5026Q0057***,* Prices, Block 23
- Continuation To SF-1449, **RFQ 19GT5026Q0057**, Schedule of Supplies/Services, Block 20 Description/Specifications/Work Statement
- Attachment A to Description/Specifications/Performance Work Statement, Government Furnished Property

SECTION 2 - CONTRACT CLAUSES

- Contract Clauses
- Addendum to Contract Clauses - FAR and DOSAR Clauses not Prescribed in Part 12

SECTION 3 - SOLICITATION PROVISIONS

- Solicitation Provisions
- Addendum to Solicitation Provisions - FAR and DOSAR Provisions not Prescribed in Part 12

SECTION 4 - EVALUATION FACTORS

- Evaluation Factors
- Addendum to Evaluation Factors - FAR and DOSAR Provisions not Prescribed in Part 12

SECTION 5 - REPRESENTATIONS AND CERTIFICATIONS

- Offeror Representations and Certifications
- Addendum to Offeror Representations and Certifications - FAR and DOSAR Provisions not Prescribed in Part 12

SECTION 1 - THE SCHEDULE

CONTINUATION TO SF-1449, RFQ NUMBER 19GT5026Q0057
PRICES, BLOCK 23

I. PERFORMANCE WORK STATEMENT

The purpose of this firm fixed price contract is to acquire preventive maintenance services for the potable water treatment plant at the U.S. Embassy Guatemala in accordance with Exhibit A.

1.1 TYPE OF CONTRACT

This is a firm fixed price contract payable entirely in the proposed currency. Prices are for all contract line items. No additional sums will be payable for any escalation in the cost of materials, equipment, or labor, or because of the Contractor's failure to properly estimate or accurately predict the cost or difficulty of achieving the results required. The contract price will not be adjusted due to fluctuations in currency exchange rates.

The contract will be for a one-year period from the date of the contract award, with four (4) one-year options.

1.2 The Overseas Buildings Operations (OBO) has a requirement to obtain water treatment maintenance services to execute this work, including logistics, customs, shipping, transportation, labor, water treatment chemicals, tools, water treatment testing kits/equipment, administrative and all associated management support functions. The water treatment service contract will include but not limited to combinations of physical methods, chemical methods, equipment servicing and testing to control water-related problems such as corrosion, scaling, general deposits, and microbiological fouling of the Potable Water Treatment System. All work shall comply with the requirements described in the following, as a minimum:

- NSF Standards (National Sanitation Foundation)
- AWWA Standards (American Water Works Association) ANSI Standards
- MSDS Regulations
- ASTM D
- NFPA Codes
- UL Standards
- IEEE Standards
- NEMA Standards
- OSHA Standards
- And all applicable manufacturer O&M and installation instructions/requirements.

1.3. OBJECTIVES

1.3.1 The purpose of this scope of work is to define the requirements for the planning, procurement, and maintenance of the Potable Water Treatment System located at the New Embassy Compound, Guatemala City. The intent of this service contract is to preserve the current piping, potable water systems, and sprinkler piping/equipment, and establish a cost-effective water treatment program to control water related problems such as corrosion, scaling, general deposits, and microbiological

fouling and meet water treatment goals. All work shall be executed in accordance with the project SOW, approved water treatment chemicals, associated contract documents and be compliant with all applicable safety, equipment and building codes and standards.

II. PRICING

The rates below include all costs associated with providing preventive maintenance services in accordance with the attached scope of work, and the manufacturer's warranty including materials, labor, insurance (see FAR 52.228-4 and 52.228-5), overhead, profit and GST (if applicable).

2.1 Base Year. The Contractor shall provide the services shown below for the base period of the contract and continuing for a period of 12 months.

CLIN	DESCRIPTION	QUANTITY OF EQUIPMENT	TYPE OF SERVICE	# OF SERVICE	UNIT PRICE / SERVICE	TOTAL PER YEAR
001	**SKID #1 RAW WATER AND CHLORINATION:** RECIRCULATION PUMPS 5 HP. TRANSFER PUMPS 3 HP CHLORINE PUMP. CITY WATER INLET 2". WELL WATER INLET 2". OUTLET TO RAW WATER STORAGE TANKS 3". INLET FROM RAW WATER. STORAGE TANKS 4". OUTLET TO FINAL FILTRATION SKID 1-1/2". CHLORINE CHEMICAL TANK 35 GAL. CONTROL PANEL. CHECK OVERALL STATUS.	15	QUARTERLY	2		
001-A	**SKID #1 RAW WATER AND CHLORINATION:** RECIRCULATION PUMPS 5 HP TRANSFER PUMPS 3 HP CHLORINE PUMP CITY WATER INLET 2" WELL WATER INLET 2"	15	SEMI ANNUAL	2		

	OUTLET TO RAW WATER STORAGE TANKS 3" INLET FROM RAW WATER STORAGE TANKS 4" OUTLET TO FINAL FILTRATION SKID 1-1/2" CHLORINE CHEMICAL TANK 35 GAL CONTROL PANEL. RE-PAINT STRUCTURE IF NEEDED.					
002	**SKID #1&3 CHLORINE ANALYZER SYSTEM** CLEANING AND TESTING.	2	MONTHLY	10		
002-A	**SKID #1&3 CHLORINE ANALYZER SYSTEM.** CLEANING, TESTING AND CALIBRATION.	2	SEMI ANNUAL	2		
003	**SKID #2 TWIN CARBON ACTIVATED FILTER A&B.** INSPECTION AND CHECKLIST.	1	WEEKLY	50		
003-A	**SKID #2 TWIN ACTIVATED CARBON FILTER A&B.** GRANULAR ACTIVATED CARBON, INLET/OUTLET, PRESSURE GAUGES, FLOWMETER, ACTIVATED CARBON INSPECTION, CONTROL PANEL, ACCESS PORT.	2	SEMI ANNUAL	1		
003-B	**SKID #2 TWIN ACTIVATED CARBON FILTER A&B.** REPLACE GRANULATED ACTIVATED CARBON BED.	2	ANNUAL	1		
004	**SKID # 3 FINAL FILTRATION AND CHLORINATION:** RECIRC PUMPS 1 HP NaOH PUMP CHLORINE PUMP	16	QUARTERLY	2		

	CORROSION INHIBITOR PUMP NaOH TANK CHLORINE TANK CORROSION INHIBITOR TANK CALCITE FILTER INLET 1-1/2" BACKWASH/DRAIN 1-1/2" OUTLET TO POTABLE WATER STORAGE TANKS 1-1/2" INLET FROM POTABLE WATER STORAGE TANKS 1-1/2" CONTROL PANEL					
004-A	**SKID # 3 FINAL FILTRATION AND CHLORINATION:** RECIRC PUMPS 1 HP NaOH PUMP CHLORINE PUMP CORROSION INHIBITOR PUMP NaOH TANK CHLORINE TANK CORROSION INHIBITOR TANK CALCITE FILTER INLET 1-1/2" BACKWASH/DRAIN 1-1/2" OUTLET TO POTABLE WATER STORAGE TANKS 1-1/2" INLET FROM POTABLE WATER STORAGE TANKS 1-1/2" CONTROL PANEL	16	SEMI ANNUAL	2		
004-B	**SKID # 3 FINAL FILTRATION AND CHLORINATION** TURBIDITY ANALYZER: CLEANING, TESTING AND CALIBRATION.	1	MONTHLY	12		
005	**SKID #6 WELL WATER PREFILTRATION-DEEP BED SAND FILTERS.** SKID #6 WATER FILTRATION MEDIA	2	WEEKLY	50		

005-A	**SKID #6 WELL WATER PREFILTRATION-DEEP BED SAND FILTERS.** SKID #6: WATER FILTRATION MEDIA, NLET/OUTLET, PRESSURE GAUGES, FLOWMETER, MEDIA INSPECTION AND TESTING, CONTROL PANEL, ACCESS PORT.	2	SEMI ANNUAL	1		
005-B	**SKID #6 WELL WATER PREFILTRATION-DEEP BED SAND FILTERS.** SKID #6: REPLACE FILTRATION MEDIA.	2	ANNUAL	1		
006	**SKID # 4 TANK 1&2:** CLEANING AND INSPECTION OF TANKS.	2	QUARTERLY	3		
006-A	**SKID # 4: TANK 1&2:** CLEANING, INSPECTION OF TANKS, VALVES AND LEVELS.	2	ANNUAL	1		
007	**50 MICRON BAG PREFILTER** CLEANING, REPLACE IF NEEDED.	1	WEEKLY	52		
008	**POTABLE WATER TREATMENT CARTRIDGE FILTERING** (50, 20 & 5 MICRON). REPLACEMENT AND CASE MAINTENANCE.	6	WEEKLY	52		
009	**BOOSTER 1,2&3 PUMPS SKID.** CONTROL PANEL & VFD 1, 2 & 3	6	QUARTERLY	4		
010	**LABORATORY TESTS:** PHYSICOCHEMICAL AND MICROBIOLOGICAL LABORATORY ANALISIS.	1	ANNUAL	1		
011	**RAW WATER TANKS** CLEANING AND SANITIZATION.	2	ANNUAL	1		

012	**POTABLE WATER TANKS** CLEANING AND SANITIZATION	2	ANNUAL	1		
013	**REPORTS**	1	ANNUAL	1		
014	**DEFENSE BASE ACT**		MONTHLY	12		
015	**LIABILITY INSURANCE**		ANNUAL	1		
	TOTAL BASE YEAR					

2.2 Option Year 1. The Contractor shall provide the services shown below for Option Year 1 of the contract and continuing for a period of 12 months.

CLIN	DESCRIPTION	QUANTITY OF EQUIPMENT	TYPE OF SERVICE	# OF SERVICE	UNIT PRICE / SERVICE	TOTAL PER YEAR
001	**SKID #1 RAW WATER AND CHLORINATION:** RECIRCULATION PUMPS 5 HP. TRANSFER PUMPS 3 HP CHLORINE PUMP. CITY WATER INLET 2". WELL WATER INLET 2". OUTLET TO RAW WATER STORAGE TANKS 3". INLET FROM RAW WATER. STORAGE TANKS 4". OUTLET TO FINAL FILTRATION SKID 1-1/2". CHLORINE CHEMICAL TANK 35 GAL. CONTROL PANEL. CHECK OVERALL STATUS.	15	QUARTERLY	2		
001-A	**SKID #1 RAW WATER AND CHLORINATION:** RECIRCULATION PUMPS 5 HP TRANSFER PUMPS 3 HP CHLORINE PUMP CITY WATER INLET 2"	15	SEMI ANNUAL	2		

	WELL WATER INLET 2" OUTLET TO RAW WATER STORAGE TANKS 3" INLET FROM RAW WATER STORAGE TANKS 4" OUTLET TO FINAL FILTRATION SKID 1-1/2" CHLORINE CHEMICAL TANK 35 GAL CONTROL PANEL. RE-PAINT STRUCTURE IF NEEDED.					
002	**SKID #1&3 CHLORINE ANALYZER SYSTEM** CLEANING AND TESTING.	2	MONTHLY	10		
002-A	**SKID #1&3 CHLORINE ANALYZER SYSTEM.** CLEANING, TESTING AND CALIBRATION.	2	SEMI ANNUAL	2		
003	**SKID #2 TWIN CARBON ACTIVATED FILTER A&B.** INSPECTION AND CHECKLIST.	1	WEEKLY	50		
003-A	**SKID #2 TWIN ACTIVATED CARBON FILTER A&B.** GRANULAR ACTIVATED CARBON, INLET/OUTLET, PRESSURE GAUGES, FLOWMETER, ACTIVATED CARBON INSPECTION, CONTROL PANEL, ACCESS PORT.	2	SEMI ANNUAL	1		
003-B	**SKID #2 TWIN ACTIVATED CARBON FILTER A&B.** REPLACE GRANULATED ACTIVATED CARBON BED.	2	ANNUAL	1		
004	**SKID # 3 FINAL FILTRATION AND CHLORINATION:** RECIRC PUMPS 1 HP NaOH PUMP	16	QUARTERLY	2		

	CHLORINE PUMP CORROSION INHIBITOR PUMP NaOH TANK CHLORINE TANK CORROSION INHIBITOR TANK CALCITE FILTER INLET 1-1/2" BACKWASH/DRAIN 1-1/2" OUTLET TO POTABLE WATER STORAGE TANKS 1-1/2" INLET FROM POTABLE WATER STORAGE TANKS 1-1/2" CONTROL PANEL					
004-A	**SKID # 3 FINAL FILTRATION AND CHLORINATION:** RECIRC PUMPS 1 HP NaOH PUMP CHLORINE PUMP CORROSION INHIBITOR PUMP NaOH TANK CHLORINE TANK CORROSION INHIBITOR TANK CALCITE FILTER INLET 1-1/2" BACKWASH/DRAIN 1-1/2" OUTLET TO POTABLE WATER STORAGE TANKS 1-1/2" INLET FROM POTABLE WATER STORAGE TANKS 1-1/2" CONTROL PANEL	16	SEMI ANNUAL	2		
004-B	**SKID # 3 FINAL FILTRATION AND CHLORINATION** TURBIDITY ANALYZER: CLEANING, TESTING AND CALIBRATION.	1	MONTHLY	12		
005	**SKID #6 WELL WATER PREFILTRATION-DEEP BED SAND FILTERS.**	2	WEEKLY	50		

	SKID #6 WATER FILTRATION MEDIA					
005-A	**SKID #6 WELL WATER PREFILTRATION-DEEP BED SAND FILTERS.** SKID #6: WATER FILTRATION MEDIA, NLET/OUTLET, PRESSURE GAUGES, FLOWMETER, MEDIA INSPECTION AND TESTING, CONTROL PANEL, ACCESS PORT.	2	SEMI ANNUAL	1		
005-B	**SKID #6 WELL WATER PREFILTRATION-DEEP BED SAND FILTERS.** SKID #6: REPLACE FILTRATION MEDIA.	2	ANNUAL	1		
006	**SKID # 4 TANK 1&2:** CLEANING AND INSPECTION OF TANKS.	2	QUARTERLY	3		
006-A	**SKID # 4: TANK 1&2:** CLEANING, INSPECTION OF TANKS, VALVES AND LEVELS.	2	ANNUAL	1		
007	**50 MICRON BAG PREFILTER** CLEANING, REPLACE IF NEEDED.	1	WEEKLY	52		
008	**POTABLE WATER TREATMENT CARTRIDGE FILTERING** (50, 20 & 5 MICRON). REPLACEMENT AND CASE MAINTENANCE.	6	WEEKLY	52		
009	**BOOSTER 1,2&3 PUMPS SKID.** CONTROL PANEL & VFD 1, 2 & 3	6	QUARTERLY	4		
010	**LABORATORY TESTS:** PHYSICOCHEMICAL AND MICROBIOLOGICAL LABORATORY ANALISIS.	1	ANNUAL	1		
011	**RAW WATER TANKS**	2	ANNUAL	1		

	CLEANING AND SANITIZATION.					
012	**POTABLE WATER TANKS** CLEANING AND SANITIZATION	2	ANNUAL	1		
013	**REPORTS**	1	ANNUAL	1		
014	**DEFENSE BASE ACT**		MONTHLY	12		
015	**LIABILITY INSURANCE**		ANNUAL	1		
	TOTAL FIRST OPTION YEAR					

2.3. Option Year 2. The Contractor shall provide the services shown below for Option Year 2 of the contract and continuing for a period of 12 months.

CLIN	DESCRIPTION	QUANTITY OF EQUIPMENT	TYPE OF SERVICE	# OF SERVICE	UNIT PRICE / SERVICE	TOTAL PER YEAR
001	**SKID #1 RAW WATER AND CHLORINATION:** RECIRCULATION PUMPS 5 HP. TRANSFER PUMPS 3 HP CHLORINE PUMP. CITY WATER INLET 2". WELL WATER INLET 2". OUTLET TO RAW WATER STORAGE TANKS 3". INLET FROM RAW WATER. STORAGE TANKS 4". OUTLET TO FINAL FILTRATION SKID 1-1/2". CHLORINE CHEMICAL TANK 35 GAL. CONTROL PANEL. CHECK OVERALL STATUS.	15	QUARTERLY	2		
001-A	**SKID #1 RAW WATER AND CHLORINATION:** RECIRCULATION PUMPS 5 HP TRANSFER PUMPS 3 HP CHLORINE PUMP	15	SEMI ANNUAL	2		

	CITY WATER INLET 2" WELL WATER INLET 2" OUTLET TO RAW WATER STORAGE TANKS 3" INLET FROM RAW WATER STORAGE TANKS 4" OUTLET TO FINAL FILTRATION SKID 1-1/2" CHLORINE CHEMICAL TANK 35 GAL CONTROL PANEL. RE-PAINT STRUCTURE IF NEEDED.					
002	**SKID #1&3 CHLORINE ANALYZER SYSTEM** CLEANING AND TESTING.	2	MONTHLY	10		
002-A	**SKID #1&3 CHLORINE ANALYZER SYSTEM.** CLEANING, TESTING AND CALIBRATION.	2	SEMI ANNUAL	2		
003	**SKID #2 TWIN CARBON ACTIVATED FILTER A&B.** INSPECTION AND CHECKLIST.	1	WEEKLY	50		
003-A	**SKID #2 TWIN ACTIVATED CARBON FILTER A&B.** GRANULAR ACTIVATED CARBON, INLET/OUTLET, PRESSURE GAUGES, FLOWMETER, ACTIVATED CARBON INSPECTION, CONTROL PANEL, ACCESS PORT.	2	SEMI ANNUAL	1		
003-B	**SKID #2 TWIN ACTIVATED CARBON FILTER A&B.** REPLACE GRANULATED ACTIVATED CARBON BED.	2	ANNUAL	1		
004	**SKID # 3 FINAL FILTRATION AND CHLORINATION:** RECIRC PUMPS 1 HP	16	QUARTERLY	2		

	NaOH PUMP CHLORINE PUMP CORROSION INHIBITOR PUMP NaOH TANK CHLORINE TANK CORROSION INHIBITOR TANK CALCITE FILTER INLET 1-1/2" BACKWASH/DRAIN 1-1/2" OUTLET TO POTABLE WATER STORAGE TANKS 1-1/2" INLET FROM POTABLE WATER STORAGE TANKS 1-1/2" CONTROL PANEL					
004-A	**SKID # 3 FINAL FILTRATION AND CHLORINATION:** RECIRC PUMPS 1 HP NaOH PUMP CHLORINE PUMP CORROSION INHIBITOR PUMP NaOH TANK CHLORINE TANK CORROSION INHIBITOR TANK CALCITE FILTER INLET 1-1/2" BACKWASH/DRAIN 1-1/2" OUTLET TO POTABLE WATER STORAGE TANKS 1-1/2" INLET FROM POTABLE WATER STORAGE TANKS 1-1/2" CONTROL PANEL	16	SEMI ANNUAL	2		
004-B	**SKID # 3 FINAL FILTRATION AND CHLORINATION** TURBIDITY ANALYZER: CLEANING, TESTING AND CALIBRATION.	1	MONTHLY	12		
005	**SKID #6 WELL WATER PREFILTRATION-DEEP BED SAND FILTERS.**	2	WEEKLY	50		

	SKID #6 WATER FILTRATION MEDIA					
005-A	**SKID #6 WELL WATER PREFILTRATION-DEEP BED SAND FILTERS.** SKID #6: WATER FILTRATION MEDIA, NLET/OUTLET, PRESSURE GAUGES, FLOWMETER, MEDIA INSPECTION AND TESTING, CONTROL PANEL, ACCESS PORT.	2	SEMI ANNUAL	1		
005-B	**SKID #6 WELL WATER PREFILTRATION-DEEP BED SAND FILTERS.** SKID #6: REPLACE FILTRATION MEDIA.	2	ANNUAL	1		
006	**SKID # 4 TANK 1&2:** CLEANING AND INSPECTION OF TANKS.	2	QUARTERLY	3		
006-A	**SKID # 4: TANK 1&2:** CLEANING, INSPECTION OF TANKS, VALVES AND LEVELS.	2	ANNUAL	1		
007	**50 MICRON BAG PREFILTER** CLEANING, REPLACE IF NEEDED.	1	WEEKLY	52		
008	**POTABLE WATER TREATMENT CARTRIDGE FILTERING** (50, 20 & 5 MICRON). REPLACEMENT AND CASE MAINTENANCE.	6	WEEKLY	52		
009	**BOOSTER 1,2&3 PUMPS SKID.** CONTROL PANEL & VFD 1, 2 & 3	6	QUARTERLY	4		
010	**LABORATORY TESTS:** PHYSICOCHEMICAL AND MICROBIOLOGICAL LABORATORY ANALISIS.	1	ANNUAL	1		
011	**RAW WATER TANKS**	2	ANNUAL	1		

	CLEANING AND SANITIZATION.					
012	**POTABLE WATER TANKS** CLEANING AND SANITIZATION	2	ANNUAL	1		
013	**REPORTS**	1	ANNUAL	1		
014	**DEFENSE BASE ACT**		MONTHLY	12		
015	**LIABILITY INSURANCE**		ANNUAL	1		
	TOTAL SECOND OPTION YEAR					

2. 4. Option Year 3. The Contractor shall provide the services shown below for Option Year 3 of the contract, and continuing for a period of 12 months.

CLIN	DESCRIPTION	QUANTITY OF EQUIPMENT	TYPE OF SERVICE	# OF SERVICE	UNIT PRICE / SERVICE	TOTAL PER YEAR
001	**SKID #1 RAW WATER AND CHLORINATION:** RECIRCULATION PUMPS 5 HP. TRANSFER PUMPS 3 HP CHLORINE PUMP. CITY WATER INLET 2". WELL WATER INLET 2". OUTLET TO RAW WATER STORAGE TANKS 3". INLET FROM RAW WATER. STORAGE TANKS 4". OUTLET TO FINAL FILTRATION SKID 1-1/2". CHLORINE CHEMICAL TANK 35 GAL. CONTROL PANEL. CHECK OVERALL STATUS.	15	QUARTERLY	2		
001-A	**SKID #1 RAW WATER AND CHLORINATION:** RECIRCULATION PUMPS 5 HP TRANSFER PUMPS 3 HP CHLORINE PUMP	15	SEMI ANNUAL	2		

	CITY WATER INLET 2" WELL WATER INLET 2" OUTLET TO RAW WATER STORAGE TANKS 3" INLET FROM RAW WATER STORAGE TANKS 4" OUTLET TO FINAL FILTRATION SKID 1-1/2" CHLORINE CHEMICAL TANK 35 GAL CONTROL PANEL. RE-PAINT STRUCTURE IF NEEDED.					
002	**SKID #1&3 CHLORINE ANALYZER SYSTEM** CLEANING AND TESTING.	2	MONTHLY	10		
002-A	**SKID #1&3 CHLORINE ANALYZER SYSTEM.** CLEANING, TESTING AND CALIBRATION.	2	SEMI ANNUAL	2		
003	**SKID #2 TWIN CARBON ACTIVATED FILTER A&B.** INSPECTION AND CHECKLIST.	1	WEEKLY	50		
003-A	**SKID #2 TWIN ACTIVATED CARBON FILTER A&B.** GRANULAR ACTIVATED CARBON, INLET/OUTLET, PRESSURE GAUGES, FLOWMETER, ACTIVATED CARBON INSPECTION, CONTROL PANEL, ACCESS PORT.	2	SEMI ANNUAL	1		
003-B	**SKID #2 TWIN ACTIVATED CARBON FILTER A&B.** REPLACE GRANULATED ACTIVATED CARBON BED.	2	ANNUAL	1		
004	**SKID # 3 FINAL FILTRATION AND CHLORINATION:** RECIRC PUMPS 1 HP	16	QUARTERLY	2		

	NaOH PUMP CHLORINE PUMP CORROSION INHIBITOR PUMP NaOH TANK CHLORINE TANK CORROSION INHIBITOR TANK CALCITE FILTER INLET 1-1/2" BACKWASH/DRAIN 1-1/2" OUTLET TO POTABLE WATER STORAGE TANKS 1-1/2" INLET FROM POTABLE WATER STORAGE TANKS 1-1/2" CONTROL PANEL					
004-A	**SKID # 3 FINAL FILTRATION AND CHLORINATION:** RECIRC PUMPS 1 HP NaOH PUMP CHLORINE PUMP CORROSION INHIBITOR PUMP NaOH TANK CHLORINE TANK CORROSION INHIBITOR TANK CALCITE FILTER INLET 1-1/2" BACKWASH/DRAIN 1-1/2" OUTLET TO POTABLE WATER STORAGE TANKS 1-1/2" INLET FROM POTABLE WATER STORAGE TANKS 1-1/2" CONTROL PANEL	16	SEMI ANNUAL	2		
004-B	**SKID # 3 FINAL FILTRATION AND CHLORINATION** TURBIDITY ANALYZER: CLEANING, TESTING AND CALIBRATION.	1	MONTHLY	12		
005	**SKID #6 WELL WATER PREFILTRATION-DEEP BED SAND FILTERS.**	2	WEEKLY	50		

	SKID #6 WATER FILTRATION MEDIA					
005-A	**SKID #6 WELL WATER PREFILTRATION-DEEP BED SAND FILTERS.** SKID #6: WATER FILTRATION MEDIA, NLET/OUTLET, PRESSURE GAUGES, FLOWMETER, MEDIA INSPECTION AND TESTING, CONTROL PANEL, ACCESS PORT.	2	SEMI ANNUAL	1		
005-B	**SKID #6 WELL WATER PREFILTRATION-DEEP BED SAND FILTERS.** SKID #6: REPLACE FILTRATION MEDIA.	2	ANNUAL	1		
006	**SKID # 4 TANK 1&2:** CLEANING AND INSPECTION OF TANKS.	2	QUARTERLY	3		
006-A	**SKID # 4: TANK 1&2:** CLEANING, INSPECTION OF TANKS, VALVES AND LEVELS.	2	ANNUAL	1		
007	**50 MICRON BAG PREFILTER** CLEANING, REPLACE IF NEEDED.	1	WEEKLY	52		
008	**POTABLE WATER TREATMENT CARTRIDGE FILTERING** (50, 20 & 5 MICRON). REPLACEMENT AND CASE MAINTENANCE.	6	WEEKLY	52		
009	**BOOSTER 1,2&3 PUMPS SKID.** CONTROL PANEL & VFD 1, 2 & 3	6	QUARTERLY	4		
010	**LABORATORY TESTS:** PHYSICOCHEMICAL AND MICROBIOLOGICAL LABORATORY ANALISIS.	1	ANNUAL	1		
011	**RAW WATER TANKS**	2	ANNUAL	1		

	CLEANING AND SANITIZATION.					
012	**POTABLE WATER TANKS** CLEANING AND SANITIZATION	2	ANNUAL	1		
013	**REPORTS**	1	ANNUAL	1		
014	**DEFENSE BASE ACT**		MONTHLY	12		
015	**LIABILITY INSURANCE**		ANNUAL	1		
	TOTAL THIRD OPTION YEAR					

2.5. Option Year 4. The Contractor shall provide the services shown below for Option Year 4 of the contract, and continuing for a period of 12 months

CLIN	DESCRIPTION	QUANTITY OF EQUIPMENT	TYPE OF SERVICE	# OF SERVICE	UNIT PRICE / SERVICE	TOTAL PER YEAR
001	**SKID #1 RAW WATER AND CHLORINATION:** RECIRCULATION PUMPS 5 HP. TRANSFER PUMPS 3 HP CHLORINE PUMP. CITY WATER INLET 2". WELL WATER INLET 2". OUTLET TO RAW WATER STORAGE TANKS 3". INLET FROM RAW WATER. STORAGE TANKS 4". OUTLET TO FINAL FILTRATION SKID 1-1/2". CHLORINE CHEMICAL TANK 35 GAL. CONTROL PANEL. CHECK OVERALL STATUS.	15	QUARTERLY	2		
001-A	**SKID #1 RAW WATER AND CHLORINATION:** RECIRCULATION PUMPS 5 HP TRANSFER PUMPS 3 HP CHLORINE PUMP	15	SEMI ANNUAL	2		

	CITY WATER INLET 2" WELL WATER INLET 2" OUTLET TO RAW WATER STORAGE TANKS 3" INLET FROM RAW WATER STORAGE TANKS 4" OUTLET TO FINAL FILTRATION SKID 1-1/2" CHLORINE CHEMICAL TANK 35 GAL CONTROL PANEL. RE-PAINT STRUCTURE IF NEEDED.					
002	**SKID #1&3 CHLORINE ANALYZER SYSTEM** CLEANING AND TESTING.	2	MONTHLY	10		
002-A	**SKID #1&3 CHLORINE ANALYZER SYSTEM.** CLEANING, TESTING AND CALIBRATION.	2	SEMI ANNUAL	2		
003	**SKID #2 TWIN CARBON ACTIVATED FILTER A&B.** INSPECTION AND CHECKLIST.	1	WEEKLY	50		
003-A	**SKID #2 TWIN ACTIVATED CARBON FILTER A&B.** GRANULAR ACTIVATED CARBON, INLET/OUTLET, PRESSURE GAUGES, FLOWMETER, ACTIVATED CARBON INSPECTION, CONTROL PANEL, ACCESS PORT.	2	SEMI ANNUAL	1		
003-B	**SKID #2 TWIN ACTIVATED CARBON FILTER A&B.** REPLACE GRANULATED ACTIVATED CARBON BED.	2	ANNUAL	1		
004	**SKID # 3 FINAL FILTRATION AND CHLORINATION:** RECIRC PUMPS 1 HP	16	QUARTERLY	2		

	NaOH PUMP CHLORINE PUMP CORROSION INHIBITOR PUMP NaOH TANK CHLORINE TANK CORROSION INHIBITOR TANK CALCITE FILTER INLET 1-1/2" BACKWASH/DRAIN 1-1/2" OUTLET TO POTABLE WATER STORAGE TANKS 1-1/2" INLET FROM POTABLE WATER STORAGE TANKS 1-1/2" CONTROL PANEL					
004-A	**SKID # 3 FINAL FILTRATION AND CHLORINATION:** RECIRC PUMPS 1 HP NaOH PUMP CHLORINE PUMP CORROSION INHIBITOR PUMP NaOH TANK CHLORINE TANK CORROSION INHIBITOR TANK CALCITE FILTER INLET 1-1/2" BACKWASH/DRAIN 1-1/2" OUTLET TO POTABLE WATER STORAGE TANKS 1-1/2" INLET FROM POTABLE WATER STORAGE TANKS 1-1/2" CONTROL PANEL	16	SEMI ANNUAL	2		
004-B	**SKID # 3 FINAL FILTRATION AND CHLORINATION** TURBIDITY ANALYZER: CLEANING, TESTING AND CALIBRATION.	1	MONTHLY	12		
005	**SKID #6 WELL WATER PREFILTRATION-DEEP BED SAND FILTERS.**	2	WEEKLY	50		

	SKID #6 WATER FILTRATION MEDIA					
005-A	**SKID #6 WELL WATER PREFILTRATION-DEEP BED SAND FILTERS.** SKID #6: WATER FILTRATION MEDIA, NLET/OUTLET, PRESSURE GAUGES, FLOWMETER, MEDIA INSPECTION AND TESTING, CONTROL PANEL, ACCESS PORT.	2	SEMI ANNUAL	1		
005-B	**SKID #6 WELL WATER PREFILTRATION-DEEP BED SAND FILTERS.** SKID #6: REPLACE FILTRATION MEDIA.	2	ANNUAL	1		
006	**SKID # 4 TANK 1&2:** CLEANING AND INSPECTION OF TANKS.	2	QUARTERLY	3		
006-A	**SKID # 4: TANK 1&2:** CLEANING, INSPECTION OF TANKS, VALVES AND LEVELS.	2	ANNUAL	1		
007	**50 MICRON BAG PREFILTER** CLEANING, REPLACE IF NEEDED.	1	WEEKLY	52		
008	**POTABLE WATER TREATMENT CARTRIDGE FILTERING** (50, 20 & 5 MICRON). REPLACEMENT AND CASE MAINTENANCE.	6	WEEKLY	52		
009	**BOOSTER 1,2&3 PUMPS SKID.** CONTROL PANEL & VFD 1, 2 & 3	6	QUARTERLY	4		
010	**LABORATORY TESTS:** PHYSICOCHEMICAL AND MICROBIOLOGICAL LABORATORY ANALISIS.	1	ANNUAL	1		
011	**RAW WATER TANKS**	2	ANNUAL	1		

	CLEANING AND SANITIZATION.					
012	**POTABLE WATER TANKS** CLEANING AND SANITIZATION	2	ANNUAL	1		
013	**REPORTS**	1	ANNUAL	1		
014	**DEFENSE BASE ACT**		MONTHLY	12		
015	**LIABILITY INSURANCE**		ANNUAL	1		
	TOTAL FOURTH OPTION YEAR					

2.5 Option to extend the services

CLIN	DESCRIPTION	QUANTITY OF EQUIPMENT	TYPE OF SERVICE	# OF SERVICE	UNIT PRICE / SERVICE	TOTAL PER YEAR
001	**SKID #1 RAW WATER AND CHLORINATION:** RECIRCULATION PUMPS 5 HP. TRANSFER PUMPS 3 HP CHLORINE PUMP. CITY WATER INLET 2". WELL WATER INLET 2". OUTLET TO RAW WATER STORAGE TANKS 3". INLET FROM RAW WATER. STORAGE TANKS 4". OUTLET TO FINAL FILTRATION SKID 1-1/2". CHLORINE CHEMICAL TANK 35 GAL. CONTROL PANEL. CHECK OVERALL STATUS.	15	QUARTERLY	1		
001-A	**SKID #1 RAW WATER AND CHLORINATION:** RECIRCULATION PUMPS 5 HP TRANSFER PUMPS 3 HP CHLORINE PUMP CITY WATER INLET 2"	15	SEMI ANNUAL	1		

	WELL WATER INLET 2" OUTLET TO RAW WATER STORAGE TANKS 3" INLET FROM RAW WATER STORAGE TANKS 4" OUTLET TO FINAL FILTRATION SKID 1-1/2" CHLORINE CHEMICAL TANK 35 GAL CONTROL PANEL. RE-PAINT STRUCTURE IF NEEDED.					
002	**SKID #1&3 CHLORINE ANALYZER SYSTEM** CLEANING AND TESTING.	2	MONTHLY	5		
002-A	**SKID #1&3 CHLORINE ANALYZER SYSTEM.** CLEANING, TESTING AND CALIBRATION.	2	SEMI ANNUAL	1		
003	**SKID #2 TWIN CARBON ACTIVATED FILTER A&B.** INSPECTION AND CHECKLIST.	1	WEEKLY	25		
003-A	**SKID #2 TWIN ACTIVATED CARBON FILTER A&B.** GRANULAR ACTIVATED CARBON, INLET/OUTLET, PRESSURE GAUGES, FLOWMETER, ACTIVATED CARBON INSPECTION, CONTROL PANEL, ACCESS PORT.	2	SEMI ANNUAL	1		
003-B	**SKID #2 TWIN ACTIVATED CARBON FILTER A&B.** REPLACE GRANULATED ACTIVATED CARBON BED.	2	ANNUAL	0		
004	**SKID # 3 FINAL FILTRATION AND CHLORINATION:** RECIRC PUMPS 1 HP NaOH PUMP	16	QUARTERLY	1		

	CHLORINE PUMP CORROSION INHIBITOR PUMP NaOH TANK CHLORINE TANK CORROSION INHIBITOR TANK CALCITE FILTER INLET 1-1/2" BACKWASH/DRAIN 1-1/2" OUTLET TO POTABLE WATER STORAGE TANKS 1-1/2" INLET FROM POTABLE WATER STORAGE TANKS 1-1/2" CONTROL PANEL					
004-A	**SKID # 3 FINAL FILTRATION AND CHLORINATION:** RECIRC PUMPS 1 HP NaOH PUMP CHLORINE PUMP CORROSION INHIBITOR PUMP NaOH TANK CHLORINE TANK CORROSION INHIBITOR TANK CALCITE FILTER INLET 1-1/2" BACKWASH/DRAIN 1-1/2" OUTLET TO POTABLE WATER STORAGE TANKS 1-1/2" INLET FROM POTABLE WATER STORAGE TANKS 1-1/2" CONTROL PANEL	16	SEMI ANNUAL	1		
004-B	**SKID # 3 FINAL FILTRATION AND CHLORINATION** TURBIDITY ANALYZER: CLEANING, TESTING AND CALIBRATION.	1	MONTHLY	6		
005	**SKID #6 WELL WATER PREFILTRATION-DEEP BED SAND FILTERS.**	2	WEEKLY	25		

	SKID #6 WATER FILTRATION MEDIA					
005-A	**SKID #6 WELL WATER PREFILTRATION-DEEP BED SAND FILTERS.** SKID #6: WATER FILTRATION MEDIA, NLET/OUTLET, PRESSURE GAUGES, FLOWMETER, MEDIA INSPECTION AND TESTING, CONTROL PANEL, ACCESS PORT.	2	SEMI ANNUAL	1		
005-B	**SKID #6 WELL WATER PREFILTRATION-DEEP BED SAND FILTERS.** SKID #6: REPLACE FILTRATION MEDIA.	2	ANNUAL	0		
006	**SKID # 4 TANK 1&2:** CLEANING AND INSPECTION OF TANKS.	2	QUARTERLY	2		
006-A	**SKID # 4: TANK 1&2:** CLEANING, INSPECTION OF TANKS, VALVES AND LEVELS.	2	ANNUAL	0		
007	**50 MICRON BAG PREFILTER** CLEANING, REPLACE IF NEEDED.	1	WEEKLY	26		
008	**POTABLE WATER TREATMENT CARTRIDGE FILTERING** (50, 20 & 5 MICRON). REPLACEMENT AND CASE MAINTENANCE.	6	WEEKLY	26		
009	**BOOSTER 1,2&3 PUMPS SKID.** CONTROL PANEL & VFD 1, 2 & 3	6	QUARTERLY	2		
010	**LABORATORY TESTS:** PHYSICOCHEMICAL AND MICROBIOLOGICAL LABORATORY ANALISIS.	1	ANNUAL	0		
011	**RAW WATER TANKS**	2	ANNUAL	0		

	CLEANING AND SANITIZATION.					
012	**POTABLE WATER TANKS** CLEANING AND SANITIZATION	2	ANNUAL	0		
013	**REPORTS**	1	ANNUAL	1		
014	**DEFENSE BASE ACT**		MONTHLY	6		
015	**LIABILITY INSURANCE**		MONTHLY	6		
	TOTAL OPTION TO EXTEND – 6 MONTHS					

2.6. **Total for all years**:

Base Year $_____
Option Year 1 $_____
Option Year 2 $_____
Option Year 3 $_____
Option Year 4 $_____
6-Month Option to extend $_____
TOTAL $_____

2.7 **Repair option**.

Repairs are NOT included under this agreement and are to be made outside this contract. However, we would like to have current labor rates if there is an issue discovered during the preventive maintenance of the specified equipment. Please provide your current labor rates in the Repair Option fields below. Any necessary repairs or parts will be submitted for approval and then billed against a separate purchase order (PO). The Contractor is not approved to do any additional work without approval.

Repair Labor Rates

Base Year $_____/hr.
Option Year 1 $_____/hr.
Option Year 2 $_____/hr
Option Year 3 $_____/hr
Option Year 4 $_____/hr
6-month Option to Extend $_____/hr

2.8 **Emergency Service Option.**

Emergency Service is NOT included under this agreement and will be billed outside the contract. However, we would like to have the rates in the event of an emergency. Emergency Service, with a four-hour response time, must be available 24 hours per day, 365 days a year. Submit cost for Emergency Services below. Please indicate how the emergency service will be billed (hourly, trip charge, etc.).

Emergency Service Rates

Base Year	$_____
Option Year 1	$_____
Option Year 2	$_____
Option Year 3	$_____
Option Year 4	$_____
6-month Option to Extend	$_____

III. VALUE ADDED TAX

Value Added Tax (VAT) is not included in the CLIN rates. Instead, it will be priced as a separate Line Item in the contract and on Invoices.

QUALITY ASSURANCE AND SURVEILLANCE PLAN (QASP)

This plan provides an effective method to promote satisfactory contractor performance. The QASP provides a method for the Contracting Officer's Representative (COR) to monitor Contractor performance, advise the Contractor of unsatisfactory performance, and notify the Contracting Officer of continued unsatisfactory performance. The Contractor, not the Government, is responsible for management and quality control to meet the terms of the contract. The role of the Government is to monitor quality to ensure that contract standards are achieved.

Performance Objective	**Scope of Work Paragraphs**	**Performance Threshold**
Services. Performs all preventive maintenance services set forth in the scope of work for the potable water treatment plant.	I through IX	All required services are performed and no more than one (1) customer complaint is received per month.

1. SURVEILLANCE. The COR will receive and document all complaints from Government personnel regarding the services provided. If appropriate, the COR will send the complaints to the Contractor for corrective action.

2. STANDARD. The performance standard is that the Government receives no more than one (1) customer complaint per month. The COR shall notify the Contracting Officer of the complaints so that the Contracting Officer may take appropriate action to enforce the inspection clause (FAR 52.212.4, Contract Terms and Conditions - Commercial Products and Commercial Services (NOV 2023), if any of the services exceed the standard.

3. PROCEDURES.

(a) If any Government personnel observe unacceptable services, either incomplete work or required services not being performed they should immediately contact the COR.

(b) The COR will complete appropriate documentation to record the complaint.

(c) If the COR determines the complaint is invalid, the COR will advise the complainant. The COR will retain the annotated copy of the written complaint for his/her files.

(d) If the COR determines the complaint is valid, the COR will inform the Contractor and give the Contractor additional time to correct the defect, if additional time is available. The COR shall determine how much time is reasonable.

(e) The COR shall, as a minimum, orally notify the Contractor of any valid complaints.

(f) If the Contractor disagrees with the complaint after investigation of the site and challenges the validity of the complaint, the Contractor will notify the COR. The COR will review the matter to determine the validity of the complaint.

(g) The COR will consider complaints as resolved unless notified otherwise by the complainant.

(h) Repeat customer complaints are not permitted for any services. If a repeat customer complaint is received for the same deficiency during the service period, the COR will contact the Contracting Officer for appropriate action under the Inspection clause.

IV. GENERAL REQUIREMENTS

4.1 This statement of work (SOW) describes the preventive maintenance and testing services and deliverables to be performed by the Contractor at the New U.S. Embassy Compound, in Guatemala City.

4.2 The assigned Contracting Officer and Contracting Officer's Representative are the sole points of contact for all technical and contractual discussions or issues regarding the scope of work and its intent and execution. The Contractor shall take no direction verbal or otherwise from United States Government (USG) personnel other than the Contracting Officer or Contract Officer's Representative.

4.3 This Statement of Work requires the Contractor to provide site assessment and survey services, project management, professional water treatment services, water treatment logistics and material procurement services, preventive maintenance and testing services, cost estimating and scheduling services, and general support services for this water treatment maintenance contract.

4.4 The Contractor's proposed and USG accepted maintenance contract cost proposal and maintenance schedule, including completion dates shall be incorporated into the task order. Additionally, the task order shall be a firm fixed price task order.

4.5 This statement of work and applicable deliverables and documents as developed by the Contractor and accepted by the USG shall serve as the basis for describing and delineating the scope of the required services and work limits for service contracts to be furnished and executed by the Contractor.

4.6 All deliverables, documents, proposals, etc. submitted by the Contractor under this statement of work shall remain the property of the U.S. Government. All U.S. Government documents and data provided to the Contractor shall remain the property of the U.S. Government. The Contractor shall limit duplication and dissemination of all U.S. Government documents and Contractor developed documents under this statement of work to/within the Contractor's execution team. Duplication or distribution of project documents outside the Contractor's team is strictly prohibited without the express written approval and authorization of the contracting officer.

Upon completion of each service visit all documents, electronic media, photos, etc. shall be submitted to the Government, including all documents and data the Government provided to the Contractor. All service contract documents and media shall be submitted to the Government along with the Contractor's service report.

4.7 The Contractor shall schedule, coordinate, and arrange all work to cause the least interference with the normal occurrence of post operations. In those cases where some interference is unavoidable, the Contractor shall make every effort to minimize the impact of the interference and

its effects on the occupants or users. All detailed work schedules required by this statement of work shall be electronically documented and updated and made available to the Contracting Officer's Representative (COR) upon request, oral or written. If the COR determines that the Contractor's schedule conflicts with critical post operations, the Contractor shall modify the schedule as required.

4.8 The Contractor shall ensure that all Embassy/Post facilities, equipment and systems recommended for and maintained or installed by the Contractor are done so with the highest quality and cost-effective materials, finishes, fixtures, equipment and system that provide for sustained operational reliability, dependability and durability. The Contractor shall assure that the equipment/water treatment chemicals furnished and installed are maintainable and equipment/parts can be readily replaced with locally available supplies and services as practical, taking into consideration local economy and resources. The Contractor shall utilize reliability-centered maintenance (RCM) principles and methodologies during and for all project activities and tasks. Uniformity of parts and components shall be taken into consideration to maximize part interchangeability with other existing Post systems. Except as otherwise directed by the contracting officer all parts, materials, components, equipment, systems, etc. furnished by the Contractor shall be new – not used or manufactured by third party entities. Except as otherwise directed by the contracting officer, all replacement or warranty parts shall be new and equal to or better than manufacturer recommended replacements.

4.9 After reviewing the US Government Statement of Work and provided technical data by the Contractor, any discrepancies, errors, conflicts, etc. that are discovered by the Contractor, the Contractor shall forward those items to the CO via written correspondence. Submittal of this written correspondence shall be completed within 3 days upon receipt of the US Government Statement of Work.

4.9.1 The Contractor shall provide 3 customer references of similar scope of work and US Dollar value.

4.9.2 The Contractor will not use any method or substances which may cause damage to the equipment or systems. Any damage or loss through negligence and/or maintenance practices by the Contractor, Sub-contractor, or Contractor's staff shall be entirely the responsibility of the Contractor. The U.S. New Embassy Compound, Guatemala, City will require the Contractor to repair/replace any damaged systems or pay for the cost of rectification.

4.9.3 The Contractor must, for the duration of the contracted Services, continue to maintain a quality control process which has been agreed to by the U.S. New Embassy Compound, Guatemala, City COR and the Contractor.

4.9.4 Notice to proceed: After Contract award and submission of acceptable insurance certificates and copies of all applicable licenses and permits have been provided, the Contracting Officer will issue a Notice to Proceed.

The Notice to Proceed will establish a date (a minimum of ten (10) calendar days from date of Contract award unless the Contractor agrees to an earlier date) on which performance shall start.

The Contractor shall provide the technician's resume and training documentation within 20 days of the notice to proceed.

4.9.5 The service provider must have a minimum of five (5) years of experience with the design, manufacturing, and start-up of potable water treatment in industrial facilities or large building facilities and have provided service or start-up services to a minimum of 10 industrial/building facilities.

V. PERFORMANCE CRITERIA

5.1 Performance Objective

The objective of this Agreement is to provide, within the Term of this Contract, a professional level of service, which provides:

- US Embassy satisfaction in respect to the maintenance of water treatment systems and prompt reaction to any change in arrangements or operational requirements of the US Embassy.
- Compliance with the statutory and regulatory provisions of the laws of the jurisdiction.
- Best in class practices within the industry.
- Risk reduction for the US Embassy.
- Preservation of asset value; and
- Reduction in operating costs.

The Service Contractor agrees that its performance under the Contract shall be measured against performance criteria specified in this document or otherwise agreed at the time of commencement.

5.2 Performance Benchmarks

The Service Contractor must for the duration of the contracted Services continue to maintain a quality control process, which has been agreed by the US Embassy and the Service Contractor.

The Service Contractor must allow the US Embassy access to the quality control system as well as the relevant quality systems of its subcontractors so as to enable monitoring and quality auditing of the maintenance service.

The US Embassy may reject any aspect of the Services that fails to comply with the requirements of the Contract, or its quality system, at any time.

5.3 Performance Monitoring and Reporting

The Service Contractor shall monitor its own performance against the criteria and benchmarks identified in this document and shall provide reports when required by the US Embassy.

5.4 SPECIFICATIONS

5.1 All equipment, chemicals, and testing procedures and kits shall be approved by the COR prior to use in the service contract.

5.2 The Contractor will be responsible for submitting the manufacture specifications, MSDS sheets and equipment cut sheets for all equipment, chemicals (including chemical composition), and testing procedures in both English and Spanish languages.

5.3 Potable Water Treatment System:

5.3.1 The potable water shall be maintained with the parameters specified in the Domestic (Potable) Water Treatment Systems Statement of Work.

VI. SAFETY HEALTH AND ENVIROMENTAL MANAGEMENT (SHEM)

6.1 The Service Contractor shall take all reasonable and proper safety precautions to prevent death or injury to any person or damage to any property at the US Embassy Guatemala City Compound and in particular all equipment used by the Service Contractor shall be used in such a manner and maintained so as to minimize the danger of accident, death, injury, loss or damage arising from the use of such equipment. In addition to relevant statutory requirements, standards and other provisions of this Contract, the Service Contractor shall have the following requirements:

- Numbers (CLIN) shall include proper disposal of toxic substances where applicable.
- The Service Contractor's personnel shall be knowledgeable with and adhere to all relevant occupational health and safety legislation and MSDS sheets.
- All electrical equipment and associated materials for the Services Contract comply with UL requirements.
- Follow all NFPA guidelines against fire, production of smoke or the venting of any noxious substances
- Ensure that the Service Contractor's personnel comply with all safety procedures and requirements
- Ensure that the Service Contractor's personnel are adequately trained and instructed in the safe and correct usage, handling and operation of materials and equipment relevant to the Services and provide reasonable proof of such to the US Embassy Guatemala City, on request.
- Ensure the Service Contractor's personnel are certified as having completed occupational health and safety training and have been issued all the necessary Personal Protection Equipment (PPE) required for safe implementation of this contract;
- Training program(s) shall be presented and must satisfy the US Embassy Guatemala City, during the submittal process.

VII. MAINTENANCE SPECIFICATION DETAILS

7.1 Precedence of Specifications. If and to the extent that there is an inconsistency between this maintenance specification and any Manufacture's maintenance specification, the Manufacture's maintenance specification shall prevail.

7.2 Hours of Work. The Service Contractor shall schedule all preventive maintenance during normal working hour which are defined as Monday through Friday from 7am to 4pm, inclusive of periodic maintenance that may be required on Saturdays, with the exception of any regular or special public holidays on which the US Embassy Compound is not open, or as agreed with the US Embassy prior to commencement of the contract.

VIII. SCOPE OF WORK

8.1 The water treatment Contractor shall provide both the required chemical products and necessary services to apply the chemicals, monitor their performance, and report the results. The water treatment service contract shall 1) preserve the interior waterside of current piping, potable water systems, and sprinkler piping/equipment, 2) reduce operating costs and establish a cost-effective water treatment program to control water related problems such as corrosion, scaling, general deposits, and microbiological fouling, and 3) ensure the proper operation of water treatment equipment.

8.2 The water treatment Contractor shall provide a "support service water treatment" contract. The support service water treatment contract shall involve joint responsibilities between the embassy facility management staff and the water treatment vendor.

8.3 The support service water treatment program shall consist of the embassy facility management staff conducting routine (daily, weekly) water treatment tests of the potable water treatment systems and emailing the results to the water treatment Contractor on a weekly basis. The Contractor will then be responsible for conducting a technical analysis of the weekly water treatment testing results from the embassy. The Contractor will then respond to the embassy within 24 hours to direct the embassy facility management staff to make any changes to the chemical dosages and/or equipment operations as necessary.

8.4 The water treatment Contractor shall visit the embassy on a Weekly basis (52 times a year – every week) at 6-day consecutive intervals. The Contractor shall be responsible for all logistics including but not limited to transportation and hotel reservations for their staff.

8.5 **The water treatment Contractor shall provide good chemicals and have a storage life expectance of at least 1 year.**

8.6 **The water treatment Contractor shall establish minimum and maximum control ranges for each treatment chemical and avoid unnecessary high levels of chemicals to mitigate cost and adverse chemical reactions from improper high level chemical dosage.**

8.7 The water treatment Contractor shall perform the required services as described in the following SOW attachments, as applicable:

Exhibit A – Potable Water Treatment System

8.8 The water treatment Contractor shall provide 12 hours of familiarization annually in both English and Spanish to acquaint operators in the necessary water treatment tests, the control ranges for each treatment chemical, safe handling of equipment and chemicals, and new water treatment procedures/technologies.

8.9 The water treatment Contractor shall review the facility water treatment logs and the operating logs to verify the chemicals are within design parameters.

8.10 The water treatment Contractor shall discuss the water treatment conditions with the Facility Manager and operating engineers monthly and follow up with a written service report within 3 business days after each visit. The report shall be in English and contain the results of water treatment Contractor's on-site and laboratory tests, comment on the status of each system, and specific recommendations for action if necessary.

IX. ACCESS TO GOVERNMENT BUILDINGS AND STANDARDS OF CONDUCT

9.1 The Contractor shall designate a representative who shall supervise the Contractor's technicians and be the Contractor's liaison with the US New Embassy Compound, Guatemala City. The Contractor's employees shall be on-site only for contractual duties and not for any other business or purposes. Contractor employees shall have access to the systems dedicated rooms with or without security escorts, only with specific permission by the Facility Manager, Contracting Officer, or the COR.

9.2 Personnel security: The US Embassy reserves the right to deny access to U.S owned and U.S.-operated facilities to any individual. The Contractor shall provide the names, biographic data and police clearance on all Contractor personnel, who shall be used on this contract prior to their utilization on this contract.

9.3 Standards of Conduct.

9.3.1 General: The Contractor shall maintain satisfactory standards of employee competency, conduct, cleanliness, appearance, and integrity and shall be responsible for taking such disciplinary action with respect to employees as necessary. Each Contractor employee shall adhere to standards of conduct that reflect credit on themselves, their employer, and the United States Government. The US Embassy reserves the right to direct the Contractor to remove an employee from the worksite for failure to comply with the standards of conduct. The Contractor shall immediately replace such an employee to maintain continuity of services at no additional cost to the Government.

9.3.2 Uniforms and Personal Equipment. The Contractor's employees shall wear clean, neat and complete uniforms when on duty. The Contractor shall provide, to each employee and supervisor,

uniforms and personal equipment. The Contractor shall be responsible for the cost of purchasing, cleaning, pressing, and repair of the uniforms.

9.3.3 Neglect of Duties. Neglect of duties shall not be condoned. This includes sleeping while on duty, unreasonable delays or failures to carry out assigned tasks, conducting personal affairs during duty hours and refusing to render assistance or cooperate in upholding the integrity of the worksite security.

9.3.4 Intoxicants and Narcotics. The Contractor shall not allow its employees while on duty to possess, sell, consume, or be under the influence of intoxicants, drugs or substances which produce similar effects.

SECTION 2 - CONTRACT CLAUSES

52.212-4 CONTRACT TERMS AND CONDITIONS – COMMERCIAL ITEMS (NOV 2023) IS INCORPORATED BY REFERENCE. (SEE SF-1449, BLOCK 27A)

FAR 52.212-5 Contract Terms and Conditions Required to Implement Statutes or Executive Orders—Commercial Products and Commercial Services (MAR 2026)

(a) The Contractor shall comply with the following Federal Acquisition Regulation (FAR) clauses, which are incorporated in this contract by reference, to implement provisions of law or Executive orders applicable to acquisitions of commercial products and commercial services:
(1) 52.203-19, Prohibition on Requiring Certain Internal Confidentiality Agreements or Statements (Jan 2017) (section 743 of Division E, Title VII, of the Consolidated and Further Continuing Appropriations Act, 2015 (Pub. L. 113-235) and its successor provisions in subsequent appropriations acts (and as extended in continuing resolutions)).
(2) 52.204-23, Prohibition on Contracting for Hardware, Software, and Services Developed or Provided by Kaspersky Lab Covered Entities (Dec 2023) (Section 1634 of Pub. L. 115-91).
(3) 52.204-25, Prohibition on Contracting for Certain Telecommunications and Video Surveillance Services or Equipment. (Nov 2021) (Section 889(a)(1)(A) of Pub. L. 115-232).
(4) 52.209-10, Prohibition on Contracting with Inverted Domestic Corporations (Nov 2015).
(5) 52.232-40, Providing Accelerated Payments to Small Business Subcontractors (Mar 2023) (31 U.S.C. 3903 and 10 U.S.C. 3801).
(6) 52.233-3, Protest After Award (Aug 1996) (31 U.S.C. 3553).
(7) 52.233-4, Applicable Law for Breach of Contract Claim (Oct 2004) (Public Laws 108-77 and 108-78 (19 U.S.C. 3805 note)).
(b) The Contractor shall comply with the FAR clauses in this paragraph (b) that the Contracting Officer has indicated as being incorporated in this contract by reference to implement provisions of law or Executive orders applicable to acquisitions of commercial products and commercial services:
__ (1) 52.203-6, Restrictions on Subcontractor Sales to the Government (Jun 2020), with *Alternate I* (Nov 2021) (41 U.S.C. 4704 and 10 U.S.C. 4655).
__ (2) 52.203-13, Contractor Code of Business Ethics and Conduct (Nov 2021) (41 U.S.C. 3509)).
__ (3) 52.203-15, Whistleblower Protections under the American Recovery and Reinvestment Act of 2009 (Jun 2010) (Section 1553 of Pub. L. 111-5). (Applies to contracts funded by the American Recovery and Reinvestment Act of 2009.)
__ (4) 52.203-17, Contractor Employee Whistleblower Rights (Nov 2023) (41 U.S.C. 4712); this clause does not apply to contracts of DoD, NASA, the Coast Guard, or applicable elements of the intelligence community—see FAR 3.900(a).
X (5) 52.204-10, Reporting Executive Compensation and First-Tier Subcontract Awards (Jun 2020) (Pub. L. 109-282) (31 U.S.C. 6101 note).
__ (6) [Reserved].
__ (7) 52.204-14, Service Contract Reporting Requirements (Oct 2016) (Pub. L. 111-117, section 743 of Div. C).
__ (8) 52.204-15, Service Contract Reporting Requirements for Indefinite-Delivery Contracts (Oct 2016) (Pub. L. 111-117, section 743 of Div. C).

X (9) 52.204-27, Prohibition on a ByteDance Covered Application (Jun 2023) (Section 102 of Division R of Pub. L. 117-328).
__ (10) 52.204-28, Federal Acquisition Supply Chain Security Act Orders—Federal Supply Schedules, Governmentwide Acquisition Contracts, and Multi-Agency Contracts. (Dec 2023) (Pub. L. 115–390, title II).
X (11)
(i) 52.204-30, Federal Acquisition Supply Chain Security Act Orders—Prohibition. (Dec 2023) (Pub. L. 115–390, title II).
__ (ii) Alternate I (Dec 2023) of 52.204-30.
X (12) 52.209-6, Protecting the Government's Interest When Subcontracting With Contractors Debarred, Suspended, Proposed for Debarment, or Voluntarily Excluded. (Jan 2025) (31 U.S.C. 6101 note).
__ (13) 52.209-9, Updates of Publicly Available Information Regarding Responsibility Matters (Oct 2018) (41 U.S.C. 2313).
__ (14) [Reserved].
__ (15) 52.219-3, Notice of HUBZone Set-Aside or Sole-Source Award (Oct 2022) (15 U.S.C. 657a).
__ (16) 52.219-4, Notice of Price Evaluation Preference for HUBZone Small Business Concerns (Oct 2022) (if the offeror elects to waive the preference, it shall so indicate in its offer) (15 U.S.C. 657a).
__ (17) [Reserved]
__ (18)
(i) 52.219-6, Notice of Total Small Business Set-Aside (Nov 2020) (15 U.S.C. 644).
__ (ii) Alternate I (Mar 2020) of 52.219-6.
__ (19)
(i) 52.219-7, Notice of Partial Small Business Set-Aside (Nov 2020) (15 U.S.C. 644).
__ (ii) Alternate I (Mar 2020) of 52.219-7.
__ (20) 52.219-8, Utilization of Small Business Concerns (Jan 2025)(15 U.S.C. 637(d)(2) and (3)).
__ (21)
(i) 52.219-9, Small Business Subcontracting Plan (Jan 2025) (15 U.S.C. 637(d)(4)).
__ (ii) Alternate I (Nov 2016) of 52.219-9.
__ (iii) Alternate II (Nov 2016) of 52.219-9.
__ (iv) Alternate III (Jun 2020) of 52.219-9.
__ (v) Alternate IV (Jan 2025) of 52.219-9.
__ (22)
(i) 52.219-13, Notice of Set-Aside of Orders (Mar 2020) (15 U.S.C. 644(r)).
__ (ii) Alternate I (Mar 2020) of 52.219-13.
__ (23) 52.219-14, Limitations on Subcontracting (Oct 2022) (15 U.S.C. 657s).
__ (24) 52.219-16, Liquidated Damages—Subcontracting Plan (Sep 2021) (15 U.S.C. 637(d)(4)(F)(i)).
__ (25) 52.219-27, Notice of Set-Aside for, or Sole-Source Award to, Service-Disabled Veteran-Owned Small Business (SDVOSB) Concerns Eligible Under the SDVOSB Program (Feb 2024) (15 U.S.C. 657f).
__ (26)

(i) 52.219-28, Post award Small Business Program Representation (Jan 2025) (15 U.S.C. 632(a)(2)).
__ (ii) Alternate I (Mar 2020) of 52.219-28.
__ (27) 52.219-29, Notice of Set-Aside for, or Sole-Source Award to, Economically Disadvantaged Women-Owned Small Business Concerns (Oct 2022) (15 U.S.C. 637(m)).
__ (28) 52.219-30, Notice of Set-Aside for, or Sole-Source Award to, Women-Owned Small Business Concerns Eligible Under the Women-Owned Small Business Program (Oct 2022) (15 U.S.C. 637(m)).
__ (29) 52.219-32, Orders Issued Directly Under Small Business Reserves (Mar 2020) (15 U.S.C. 644(r)).
__ (30) 52.219-33, Nonmanufacturer Rule (Sep 2021) (15 U.S.C. 637(a)(17)).
__ (31) 52.222-3, Convict Labor (Jun 2003) (E.O. 11755).
X (32) 52.222-19, Child Labor—Cooperation with Authorities and Remedies (Mar 2026)(E.O. 13126).
__ (33) 52.222-21, Prohibition of Segregated Facilities (Apr 2015).
__ (34)
(i) 52.222-26, Equal Opportunity (Sep 2016) (E.O. 11246).
__ (ii) Alternate I (Feb 1999) of 52.222-26.
__ (35)
(i) 52.222-35, Equal Opportunity for Veterans (Jun 2020) (38 U.S.C. 4212).
__ (ii) Alternate I (Jul 2014) of 52.222-35.
__ (36)
(i) 52.222-36, Equal Opportunity for Workers with Disabilities (Jun 2020) (29 U.S.C. 793).
__ (ii) Alternate I (Jul 2014) of 52.222-36.
X (37) 52.222-37, Employment Reports on Veterans (Jun 2020) (38 U.S.C. 4212).
__ (38) 52.222-40, Notification of Employee Rights Under the National Labor Relations Act (Dec 2010) (E.O. 13496).
X (39)
(i) 52.222-50, Combating Trafficking in Persons (Oct 2025) (22 U.S.C. chapter 78 and E.O. 13627).
__ (ii) Alternate I (Mar 2015) of 52.222-50 (22 U.S.C. chapter 78 and E.O. 13627).
__ (40) 52.222-54, Employment Eligibility Verification (Jan 2025) (Executive Order 12989). (Not applicable to the acquisition of commercially available off-the-shelf items or certain other types of commercial products or commercial services as prescribed in FAR 22.1803.)
__ (41)
(i) 52.223-9, Estimate of Percentage of Recovered Material Content for EPA–Designated Items (May 2008) (42 U.S.C. 6962(c)(3)(A)(ii)). (Not applicable to the acquisition of commercially available off-the-shelf items.)
__ (ii) Alternate I (May 2008) of 52.223-9 (42 U.S.C. 6962(i)(2)(C)). (Not applicable to the acquisition of commercially available off-the-shelf items.)
__ (42) 52.223-11, Ozone-Depleting Substances and High Global Warming Potential Hydrofluorocarbons (May 2024) (42 U.S.C. 7671, *et seq.*).
__ (43) 52.223-12, Maintenance, Service, Repair, or Disposal of Refrigeration Equipment and Air Conditioners (May 2024) (42 U.S.C. 7671, *et seq.*).
__ (44) 52.223-20, Aerosols (May 2024) (42 U.S.C. 7671, *et seq.*).
__ (45) 52.223-21, Foams (May 2024) (42 U.S.C. 7671, *et seq.*).

X (46) 52.223-23, Sustainable Products and Services (May 2024) (E.O. 14057, 7 U.S.C. 8102, 42 U.S.C. 6962, 42 U.S.C. 8259b, and 42 U.S.C. 7671l).
__ (47)
(i) 52.224-3 Privacy Training (Jan 2017) (5 U.S.C. 552 a).
__ (ii) Alternate I (Jan 2017) of 52.224-3.
__ (48)
(i) 52.225-1, Buy American-Supplies (Oct 2022) (41 U.S.C. chapter 83).
__ (ii) Alternate I (Oct 2022) of 52.225-1.
__ (49)
(i) 52.225-3, Buy American-Free Trade Agreements-Israeli Trade Act (NOV 2023) (19 U.S.C. 3301 note, 19 U.S.C. 2112 note, 19 U.S.C. 3805 note, 19 U.S.C. 4001 note, 19 U.S.C. chapter 29 (sections 4501-4732), Public Law 103-182, 108-77, 108-78, 108-286, 108-302, 109-53, 109-169, 109-283, 110-138, 112-41, 112-42, and 112-43.
__ (ii) Alternate I [Reserved].
__ (iii) Alternate II (Jan 2025) of 52.225-3.
__ (iv) Alternate III (Feb 2024) of 52.225-3.
__ (v) Alternate IV (Oct 2022) of 52.225-3.
X (50) 52.225-5, Trade Agreements (NOV 2023) (19 U.S.C. 2501, *et seq*., 19 U.S.C. 3301 note).
X (51) 52.225-13, Restrictions on Certain Foreign Purchases (Feb 2021) (E.O.'s, proclamations, and statutes administered by the Office of Foreign Assets Control of the Department of the Treasury).
__ (52) 52.225-26, Contractors Performing Private Security Functions Outside the United States (Oct 2016) (Section 862, as amended, of the National Defense Authorization Act for Fiscal Year 2008; 10 U.S.C. Subtitle A, Part V, Subpart G Note).
__ (53) 52.226-4, Notice of Disaster or Emergency Area Set-Aside (Nov 2007) (42 U.S.C. 5150).
__ (54) 52.226-5, Restrictions on Subcontracting Outside Disaster or Emergency Area (Nov 2007) (42 U.S.C. 5150).
X (55) 52.226-8, Encouraging Contractor Policies to Ban Text Messaging While Driving (May 2024) (E.O. 13513).
__ (56) 52.229-12, Tax on Certain Foreign Procurements (Feb 2021).
X (57) 52.232-29, Terms for Financing of Purchases of Commercial Products and Commercial Services (Nov 2021) (41 U.S.C. 4505, 10 U.S.C. 3805).
__ (58) 52.232-30, Installment Payments for Commercial Products and Commercial Services (Nov 2021) (41 U.S.C. 4505, 10 U.S.C. 3805).
X (59) 52.232-33, Payment by Electronic Funds Transfer-System for Award Management (Oct2018) (31 U.S.C. 3332).
X (60) 52.232-34, Payment by Electronic Funds Transfer-Other than System for Award Management (Jul 2013) (31 U.S.C. 3332).
__ (61) 52.232-36, Payment by Third Party (May 2014) (31 U.S.C. 3332).
__ (62) 52.239-1, Privacy or Security Safeguards (Aug 1996) (5 U.S.C. 552a).
X (63) 52.240-1, Prohibition on Unmanned Aircraft Systems Manufactured or Assembled by American Security Drone Act-Covered Foreign Entities (Nov 2024) (Sections 1821-1826, Pub. L. 118-31, 41 U.S.C. 3901 note prec.).
__ (64) 52.242-5, Payments to Small Business Subcontractors (Jan 2017) (15 U.S.C. 637(d)(13)).
__ (65)

(i) 52.247-64, Preference for Privately Owned U.S.-Flag Commercial Vessels (Nov 2021) (46 U.S.C. 55305 and 10 U.S.C. 2631).
__ (ii) Alternate I (Apr 2003) of 52.247-64.
__ (iii) Alternate II (Nov 2021) of 52.247-64.
(c) The Contractor shall comply with the FAR clauses in this paragraph (c), applicable to commercial services, that the Contracting Officer has indicated as being incorporated in this contract by reference to implement provisions of law or Executive orders applicable to acquisitions of commercial products and commercial services:
__ (1) 52.222-41, Service Contract Labor Standards (Aug 2018) (41 U.S.C. chapter67).
__ (2) 52.222-42, Statement of Equivalent Rates for Federal Hires (May 2014) (29 U.S.C. 206 and 41 U.S.C. chapter 67).
__ (3) 52.222-43, Fair Labor Standards Act and Service Contract Labor Standards-Price Adjustment (Multiple Year and Option Contracts) (Aug 2018) (29 U.S.C. 206 and 41 U.S.C. chapter 67).
__ (4) 52.222-44, Fair Labor Standards Act and Service Contract Labor Standards-Price Adjustment (May 2014) (29U.S.C.206 and 41 U.S.C. chapter 67).
__ (5) 52.222-51, Exemption from Application of the Service Contract Labor Standards to Contracts for Maintenance, Calibration, or Repair of Certain Equipment-Requirements (May 2014) (41 U.S.C. chapter 67).
__ (6) 52.222-53, Exemption from Application of the Service Contract Labor Standards to Contracts for Certain Services-Requirements (May 2014) (41 U.S.C. chapter 67).
__ (7) 52.222-55, Minimum Wages for Contractor Workers Under Executive Order 14026 (Jan 2022).
__ (8) 52.222-62, Paid Sick Leave Under Executive Order 13706 (Jan 2022) (E.O. 13706).
__ (9) 52.226-6, Promoting Excess Food Donation to Nonprofit Organizations (Jun 2020) (42 U.S.C. 1792).
__ (10) 52.247-69, Reporting Requirement for U.S.-Flag Air Carriers Regarding Training to Prevent Human Trafficking (Jan 2025) (49 U.S.C. 40118(g)).
(d) *Comptroller General Examination of Record*. The Contractor shall comply with the provisions of this paragraph (d) if this contract was awarded using other than sealed bid, is in excess of the simplified acquisition threshold, as defined in FAR 2.101, on the date of award of this contract, and does not contain the clause at 52.215-2, Audit and Records-Negotiation.
(1) The Comptroller General of the United States, or an authorized representative of the Comptroller General, shall have access to and right to examine any of the Contractor's directly pertinent records involving transactions related to this contract.
(2) The Contractor shall make available at its offices at all reasonable times the records, materials, and other evidence for examination, audit, or reproduction, until 3 years after final payment under this contract or for any shorter period specified in FAR subpart 4.7, Contractor Records Retention, of the other clauses of this contract. If this contract is completely or partially terminated, the records relating to the work terminated shall be made available for 3 years after any resulting final termination settlement. Records relating to appeals under the disputes clause or to litigation or the settlement of claims arising under or relating to this contract shall be made available until such appeals, litigation, or claims are finally resolved.
(3) As used in this clause, records include books, documents, accounting procedures and practices, and other data, regardless of type and regardless of form. This does not require the Contractor to

create or maintain any record that the Contractor does not maintain in the ordinary course of business or pursuant to a provision of law.
(e)
(1) Notwithstanding the requirements of the clauses in paragraphs (a), (b), (c), and (d) of this clause, the Contractor is not required to flow down any FAR clause, other than those in this paragraph (e)(1), in a subcontract for commercial products or commercial services. Unless otherwise indicated below, the extent of the flow down shall be as required by the clause-
(i) 52.203-13, Contractor Code of Business Ethics and Conduct (Nov 2021) (41 U.S.C. 3509).
(ii) 52.203-17, Contractor Employee Whistleblower Rights (Nov 2023) (41 U.S.C. 4712).
(iii) 52.203-19, Prohibition on Requiring Certain Internal Confidentiality Agreements or Statements (Jan 2017) (section 743 of Division E, Title VII, of the Consolidated and Further Continuing Appropriations Act, 2015 (Pub. L. 113-235) and its successor provisions in subsequent appropriations acts (and as extended in continuing resolutions)).
(iv) 52.204-23, Prohibition on Contracting for Hardware, Software, and Services Developed or Provided by Kaspersky Lab Covered Entities (Dec 2023) (Section 1634 of Pub. L. 115-91).
(v) 52.204-25, Prohibition on Contracting for Certain Telecommunications and Video Surveillance Services or Equipment. (Nov 2021) (Section 889(a)(1)(A) of Pub. L. 115-232).
(vi) 52.204-27, Prohibition on a ByteDance Covered Application (Jun 2023) (Section 102 of Division R of Pub. L. 117-328).
(vii)
(A) 52.204–30, Federal Acquisition Supply Chain Security Act Orders—Prohibition. (Dec 2023) (Pub. L. 115–390, title II).
(B) Alternate I (Dec 2023) of 52.204–30.
(viii) 52.219-8, Utilization of Small Business Concerns (Jan 2025) (15 U.S.C. 637(d)(2) and (3)), in all subcontracts that offer further subcontracting opportunities. If the subcontract (except subcontracts to small business concerns) exceeds the applicable threshold specified in FAR 19.702(a) on the date of subcontract award, the subcontractor must include 52.219-8 in lower tier subcontracts that offer subcontracting opportunities.
(ix) 52.222-21, Prohibition of Segregated Facilities (Apr 2015).
(x) 52.222-26, Equal Opportunity (Sep 2016) (E.O. 11246).
(xi) 52.222-35, Equal Opportunity for Veterans (Jun 2020) (38 U.S.C. 4212).
(xii) 52.222-36, Equal Opportunity for Workers with Disabilities (Jun 2020) (29 U.S.C. 793).
(xiii) 52.222-37, Employment Reports on Veterans (Jun 2020) (38 U.S.C. 4212).
(xiv) 52.222-40, Notification of Employee Rights Under the National Labor Relations Act (Dec 2010) (E.O. 13496). Flow down required in accordance with paragraph (f) of FAR clause 52.222-40.
(xv) 52.222-41, Service Contract Labor Standards (Aug 2018) (41 U.S.C. chapter 67).
(xvi)
(A) 52.222-50, Combating Trafficking in Persons (Oct 2025) (22 U.S.C. chapter 78 and E.O. 13627).
(B) Alternate I (Mar 2015) of 52.222-50 (22 U.S.C. chapter 78 and E.O. 13627).
(xvii) 52.222-51, Exemption from Application of the Service Contract Labor Standards to Contracts for Maintenance, Calibration, or Repair of Certain Equipment-Requirements (May 2014) (41 U.S.C. chapter 67).
(xviii) 52.222-53, Exemption from Application of the Service Contract Labor Standards to Contracts for Certain Services-Requirements (May 2014) (41 U.S.C. chapter 67).

(xix) 52.222-54, Employment Eligibility Verification (Jan 2025) (E.O. 12989).
(xx) 52.222-55, Minimum Wages for Contractor Workers Under Executive Order 14026 (Jan 2022).
(xxi) 52.222-62, Paid Sick Leave Under Executive Order 13706 (Jan 2022) (E.O. 13706).
(xxii)
(A) 52.224-3, Privacy Training (Jan 2017) (5 U.S.C. 552a).
(B) Alternate I (Jan 2017) of 52.224-3.
(xxiii) 52.225-26, Contractors Performing Private Security Functions Outside the United States (Oct 2016) (Section 862, as amended, of the National Defense Authorization Act for Fiscal Year 2008; 10 U.S.C. Subtitle A, Part V, Subpart G Note).
(xxiv) 52.226-6, Promoting Excess Food Donation to Nonprofit Organizations (Jun 2020) (42 U.S.C. 1792). Flow down required in accordance with paragraph (e) of FAR clause 52.226-6.
(xxv) 52.232-40, Providing Accelerated Payments to Small Business Subcontractors (Mar 2023) (31 U.S.C. 3903 and 10 U.S.C. 3801). Flow down required in accordance with paragraph (c) of 52.232-40.
(xxvi) 52.240-1, Prohibition on Unmanned Aircraft Systems Manufactured or Assembled by American Security Drone Act-Covered Foreign Entities (Nov 2024) (Sections 1821-1826, Pub. L. 118-31, 41 U.S.C. 3901 note prec.).
(xxvii) 52.247-64, Preference for Privately Owned U.S.-Flag Commercial Vessels (Nov 2021) (46 U.S.C. 55305 and 10 U.S.C. 2631). Flow down required in accordance with paragraph (d) of FAR clause 52.247-64.
(2) While not required, the Contractor may include in its subcontracts for commercial products and commercial services a minimal number of additional clauses necessary to satisfy its contractual obligations.

(End of clause)

Alternate I (Feb 2000). As prescribed in 12.301 (b)(4)(i), delete paragraph (d) from the basic clause, redesignate paragraph (e) as paragraph (d), and revise the reference to "paragraphs (a), (b), (c), or (d) of this clause" in the redesignated paragraph (d) to read "paragraphs (a), (b), and (c) of this clause".
Alternate II (Oct 2025). As prescribed in 12.301 (b)(4)(ii), substitute the following paragraphs (d)(1) and (e)(1) for paragraphs (d)(1) and (e)(1) of the basic clause as follows:
(d)(1) The Comptroller General of the United States, an appropriate Inspector General appointed under section 3 or 8 G of the Inspector General Act of 1978 (5 U.S.C. App.), or an authorized representative of either of the foregoing officials shall have access to and right to—
(i) Examine any of the Contractor's or any subcontractors' records that pertain to, and involve transactions relating to, this contract; and
(ii) Interview any officer or employee regarding such transactions.
(e)(1) Notwithstanding the requirements of the clauses in paragraphs (a), (b), and (c), of this clause, the Contractor is not required to flow down any FAR clause in a subcontract for commercial products or commercial services, other than—
(i) *Paragraph (d) of this clause*. This paragraph flows down to all subcontracts, except the authority of the Inspector General under paragraph (d)(1)(ii) does not flow down; and

(ii) *Those clauses listed in this paragraph (e)(1)*. Unless otherwise indicated below, the extent of the flow down shall be as required by the clause-
(A) 52.203-13, Contractor Code of Business Ethics and Conduct (Nov 2021) (41 U.S.C. 3509).
(B) 52.203-15, Whistleblower Protections Under the American Recovery and Reinvestment Act of 2009 (Jun 2010) (Section 1553 of Pub. L. 111-5).
(C) 52.203-17, Contractor Employee Whistleblower Rights (Nov 2023) (41 U.S.C. 4712).
(D) 52.204-23, Prohibition on Contracting for Hardware, Software, and Services Developed or Provided by Kaspersky Lab Covered Entities (Dec 2023) (Section 1634 of Pub. L. 115-91).
(E) 52.204-25, Prohibition on Contracting for Certain Telecommunications and Video Surveillance Services or Equipment. (Nov 2021) (Section 889(a)(1)(A) of Pub. L. 115-232).
(F) 52.204-27, Prohibition on a ByteDance Covered Application (Jun 2023) (Section 102 of Division R of Pub. L. 117-328).
(G)__(*1*) 52.204–30, Federal Acquisition Supply Chain Security Act Orders— Prohibition. (Dec 2023) (Pub. L. 115–390, title II).
__(*2*) Alternate I (Dec 2023) 52.204-30.
(H) 52.219-8, Utilization of Small Business Concerns (Jan 2025) (15 U.S.C. 637(d)(2) and (3)), in all subcontracts that offer further subcontracting opportunities. If the subcontract (except subcontracts to small business concerns) exceeds the applicable threshold specified in FAR 19.702(a) on the date of subcontract award, the subcontractor must include 52.219-8 in lower tier subcontracts that offer subcontracting opportunities.
(I) 52.222-21, Prohibition of Segregated Facilities (Apr 2015).
(J) 52.222-26, Equal Opportunity (Sep 2016) (E.O. 11246).
(K) 52.222-35, Equal Opportunity for Veterans (Jun 2020) (38 U.S.C. 4212).
(L) 52.222-36, Equal Opportunity for Workers with Disabilities (Jun 2020) (29 U.S.C. 793).
(M) 52.222-40, Notification of Employee Rights Under the National Labor Relations Act (Dec 2010) (E.O. 13496). Flow down required in accordance with paragraph (f) of FAR clause 52.222-40.
(N) 52.222-41, Service Contract Labor Standards (Aug 2018) (41 U.S.C. chapter 67).
(O) __ *(1)* 52.222-50, Combating Trafficking in Persons (Oct 2025) (22 U.S.C. chapter 78 and E.O. 13627).
__ *(2)* Alternate I (Mar 2015) of 52.222-50 (22 U.S.C. chapter 78 and E.O. 13627).
(P) 52.222-51, Exemption from Application of the Service Contract Labor Standards to Contracts for Maintenance, Calibration, or Repair of Certain Equipment-Requirements (May 2014) (41 U.S.C. chapter 67).
(Q) 52.222-53, Exemption from Application of the Service Contract Labor Standards to Contracts for Certain Services-Requirements (May 2014) (41 U.S.C. chapter 67).
(R) 52.222-54, Employment Eligibility Verification (Jan 2025) (Executive Order 12989).
(S) 52.222-55, Minimum Wages for Contractor Workers Under Executive Order 14026 (Jan 2022).
(T) 52.222-62, Paid Sick Leave Under Executive Order 13706 (Jan 2022) (E.O. 13706).
(U)__ *(1)* 52.224-3, Privacy Training (Jan 2017) (5 U.S.C. 552a).
__ *(2)* Alternate I (Jan 2017) of 52.224-3.
(V) 52.225-26, Contractors Performing Private Security Functions Outside the United States (Oct 2016) (Section 862, as amended, of the National Defense Authorization Act for Fiscal Year 2008; 10 U.S.C. Subtitle A, Part V, Subpart G Note).

(W) 52.226-6, Promoting Excess Food Donation to Nonprofit Organizations. (Jun 2020) (42 U.S.C. 1792). Flow down required in accordance with paragraph (e) of FAR clause 52.226-6.
(X) 52.232-40, Providing Accelerated Payments to Small Business Subcontractors (MAR 2023) (31 U.S.C. 3903 and 10 U.S.C. 3801). Flow down required in accordance with paragraph (c) of 52.232-40.
(Y) 52.240-1, Prohibition on Unmanned Aircraft Systems Manufactured or Assembled by American Security Drone Act-Covered Foreign Entities (Nov 2024) (Sections 1821-1826, Pub. L. 118-31, 41 U.S.C. 3901 note prec.).
(Z) 52.247-64, Preference for Privately Owned U.S.-Flag Commercial Vessels (Nov 2021) (46 U.S.C. 55305 and 10 U.S.C. 2631). Flow down required in accordance with paragraph (d) of FAR clause 52.247-64.

(End of clause)

ADD THE FOLLOWING CLAUSE IN FULL TEXT:

52.229-12 TAX ON CERTAIN FOREIGN PROCUREMENTS—NOTICE AND REPRESENTATION (FEB 2021)

(a) *Definitions.* As used in this clause—
Foreign person means any person other than a United States person.
United States person, as defined in 26 U.S.C. 7701(a)(30), means–
(1) A citizen or resident of the United States;
(2) A domestic partnership;
(3) A domestic corporation;
(4) Any estate (other than a foreign estate, within the meaning of 26 U.S.C. 7701(a)(31)); and
(5) Any trust if-
(i) A court within the United States is able to exercise primary supervision over the administration of the trust; and
(ii) One or more United States persons have the authority to control all substantial decisions of the trust.
(b) This clause applies only to foreign persons. It implements 26 U.S.C. 5000C and its implementing regulations at 26 CFR 1.5000C-1 through 1.5000C-7.
(c)

(1) If the Contractor is a foreign person and has only a partial or no exemption to the withholding, the Contractor shall include the Department of the Treasury Internal Revenue Service Form W-14, Certificate of Foreign Contracting Party Receiving Federal Procurement Payments, with each voucher or invoice submitted under this contract throughout the period in which this status is applicable. The excise tax withholding is applied at the payment level, not at the contract level. The Contractor should revise each IRS Form W-14 submission to reflect the exemption (if any) that applies to that particular invoice, such as a different exemption applying. In the absence of a completed IRS Form W-14 accompanying a payment request, the default withholding percentage is 2 percent for the section 5000C withholding for that payment request. Information about IRS Form W-14 and its separate instructions is available via the internet at www.irs.gov/w14.

(2) If the Contractor is a foreign person and has indicated in its offer in the provision 52.229-11, Tax on Certain Foreign Procurements—Notice and Representation, that it is fully exempt from the withholding, and certified the full exemption on the IRS Form W-14, and if that full exemption no longer applies due to a change in circumstances during the performance of the contract that causes the Contractor to become subject to the withholding for the 2 percent excise tax then the Contractor shall–

(i) Notify the Contracting Officer within 30 days of a change in circumstances that causes the Contractor to be subject to the excise tax withholding under 26 U.S.C. 5000C; and

(ii) Comply with paragraph (c)(1) of this clause.

(d) The Government will withhold a full 2 percent of each payment unless the Contractor claims an exemption. If the Contractor enters a ratio in Line 12 of the IRS Form W-14, the result of Line 11 divided by Line 10, the Government will withhold from each payment an amount equal to 2 percent multiplied by the contract ratio. If the Contractor marks box 9 of the IRS Form W-14 (rather than completes Lines 10 through 12), the Contractor must identify and enter the specific exempt and nonexempt amounts in Line 15 of the IRS Form W-14; the Government will then withhold 2 percent only from the nonexempt amount. See the IRS Form W-14 and its instructions.

(e) Exemptions from the withholding under this clause are described at 26 CFR 1.5000C-1(d)(5) through (7). Any exemption claimed and self-certified on the IRS Form W-14 is subject to audit by the IRS. Any disputes regarding the imposition and collection of the 26 U.S.C. 5000C tax are adjudicated by the IRS as the 26 U.S.C. 5000C tax is a tax matter, not a contract issue.

(f) Taxes imposed under 26 U.S.C. 5000C may not be—

(1) Included in the contract price; nor

(2) Reimbursed.

(g) A taxpayer may, for a fee, seek advice from the Internal Revenue Service (IRS) as to the proper tax treatment of a transaction. This is called a private letter ruling. Also, the IRS may publish a revenue ruling, which is an official interpretation by the IRS of the Internal Revenue Code, related statutes, tax treaties, and regulations. A revenue ruling is the conclusion of the IRS on how the law is applied to a specific set of facts. For questions relating to the interpretation of the IRS regulations go to https://www.irs.gov/help/tax-law-questions.

(End of clause)

ADDENDUM TO CONTRACT CLAUSES
FAR AND DOSAR CLAUSES NOT PRESCRIBED IN PART 12

52.252-2 CLAUSES INCORPORATED BY REFERENCE (FEB 1998)

This contract incorporates one or more clauses by reference, with the same force and effect as if they were given in full text. Upon request, the Contracting Officer will make their full text available. In addition, the full text of a clause may be accessed electronically at: Acquisition.gov this address is subject to change.

THE FOLLOWING FEDERAL ACQUISITION REGULATIONS (FAR) CLAUSES ARE INCORPORATED BY REFERENCE:

CLAUSE	TITLE AND DATE
52.203-17	CONTRACTOR EMPLOYEE WHISTLEBLOWER RIGHTS (NOV 2023)
52.204-9	PERSONAL IDENTITY VERIFICATION OF CONTRACTOR PERSONNEL (JAN 2011)
52.204-13	SYSTEM FOR AWARD MANAGEMENT MAINTENANCE (OCT 2018)
52.204-18	COMMERCIAL AND GOVERNMENT ENTITY CODE MAINTENANCE (AUG 2020)
52.204-25	PROHIBITION ON CONTRACTING FOR CERTAIN TELECOMMUNICATIONS AND VIDEO SURVEILLANCE SERVICES OR EQUIPMENT (NOV 2021)
52.204-27	PROHIBITION ON A BYTEDANCE COVERE APPLICATION (JUN 2023)
52.222-19	CHILD LABOR-COOPERATION WITH AUTHORITIES AND REMEDIES (MAR 2026)
52.225-14	INCONSISTENCY BETWEEN ENGLISH VERSION AND TRANSLATION OF CONTRACT (FEB 2000)
52.228-3	WORKERS' COMPENSATION INSURANCE (DEFENSE BASE ACT) (JUL 2014)
52.228-5	INSURANCE - WORK ON A GOVERNMENT INSTALLATION (JAN 1997)
52.229-6	TAXES - FOREIGN FIXED PRICE CONTRACTS (FEB 2013)
52.232-39	UNENFORCEABILITY OF UNAUTHORIZED OBLIGATIONS (JUNE 2013)
52.232-40	PROVIDING ACCELERATED PAYMENTS TO SMALL BUSINESS SUBCONTRACTORS (MAR 2023)
52.244-6	SUBCONTRACTS FOR COMMERCIAL PRODUCTS AND COMMERCIAL SERVICES (OCT 2025)

THE FOLLOWING FAR CLAUSES ARE PROVIDED IN FULL TEXT:

52.217-8 OPTION TO EXTEND SERVICES (NOV 1999)

The Government may require continued performance of any services within the limits and at the rates specified in the contract. The option provision may be exercised more than once, but the

total extension of performance hereunder shall not exceed 6 months. The Contracting Officer may exercise the option by written notice to the Contractor within the performance period of the contract.

(End of clause)

52.217-9 OPTION TO EXTEND THE TERM OF THE CONTRACT (MAR 2000)

(a) The Government may extend the term of this contract by written notice to the Contractor within the performance period of the contract or within 30 days after funds for the option year become available, whichever is later.

(b) If the Government exercises this option, the extended contract shall be considered to include this option clause.

(c) The total duration of this contract, including the exercise of any options under this clause, shall not exceed 66 months.

(End of clause)

52.232-19 AVAILABILITY OF FUNDS FOR THE NEXT FISCAL YEAR (APR 1984)

Funds are not presently available for performance under this contract beyond September 30 of the current calendar year. The Government's obligation for performance of this contract beyond that date is contingent upon the availability of appropriated funds from which payment for contract purposes can be made. No legal liability on the part of the Government for any payment may arise for performance under this contract beyond September 30 of the current calendar year, until funds are made available to the Contracting Officer for performance and until the Contractor receives notice of availability, to be confirmed in writing by the Contracting Officer.

(End of clause)

THE FOLLOWING DOSAR CLAUSES ARE PROVIDED IN FULL TEXT:

652.204-70 Department of State Personal Identification Card Policy and Procedures.

As prescribed in 604.1303–70, insert the following clause:

Department of State Personal Identification Card Policy and Procedures (FEB 2015)

(a) The Contractor shall comply with the Department of State (DOS) Personal Identification Card Policy and Procedures for all employees performing under this contract who require frequent and continuing access to DOS facilities, or information systems. The Contractor shall insert the substance of this clause in all subcontracts when the subcontractor's employees will require frequent and continuing access to DOS facilities, or information systems.

(b) The DOS Personal Identification Card Policy and Procedures may be accessed at *http://www.state.gov/m/ds/rls/rpt/c21664.htm*.

(End of clause)

CONTRACTOR IDENTIFICATION (JULY 2008)

Contract performance may require contractor personnel to attend meetings with government personnel and the public, work within government offices, and/or utilize government email.

Contractor personnel must take the following actions to identify themselves as non-federal employees:

1) Use an email signature block that shows name, the office being supported and company affiliation (e.g. "John Smith, Office of Human Resources, ACME Corporation Support Contractor");

2) Clearly identify themselves and their contractor affiliation in meetings;

3) Identify their contractor affiliation in Departmental e-mail and phone listings whenever contractor personnel are included in those listings; and

4) Contractor personnel may not utilize Department of State logos or indicia on business cards.

(End of clause)

652.215-70 EXAMINATION OF RECORDS

(a) With respect to matters related to this contract or a subcontract hereunder, the Department of State Office of the Inspector General, or an authorized representative, shall have upon request:
(1) Complete, prompt, and free access to all Contractor and Subcontractor files (in any format), documents, records, data, premises, and employees, except as limited by law; and

(2) The right to interview any current Contractor and Subcontractor personnel, individually and directly, with respect to such matters.

(b) This clause may not be construed to require the contractor or any subcontractor to create or maintain any record that the contractor or subcontractor does not maintain in the ordinary course of business or pursuant to a provision of law.

(c) The Contractor shall insert a clause containing all the terms of this clause, including this paragraph (c), in all subcontracts under this contract other than acquisitions described in Federal Acquisition Regulation 15.209(b)(1).

652.232-70 PAYMENT SCHEDULE AND INVOICE SUBMISSION (FIXED-PRICE) (AUG 1999)

(a) General. The Government shall pay the Contractor as full compensation for all work required, performed, and accepted under this contract the firm fixed-price stated in this contract.

(b) Invoice Submission. The Contractor shall submit invoices in an original. To constitute a proper invoice, the invoice shall include all the items required by FAR 32.905(e).

*The price in the contract does not include VAT.
* The invoice must include VAT and should be downloaded from your Virtual Agency SAT.
*Payment processing will begin after services have been rendered and/or items have been delivered and a correct invoice has been received.
*Payment terms: Net 30 days after receipt of valid invoice in the finance office.
*Invoice cannot include any services and/or items beyond what is included in this Purchase Order.
*Performance (services) will be coordinated by the requesting office, if applicable.
***Payments will be made only via Electronic Funds Transfer (EFT).**

INVOICE AND PAYMENT PROCESS:

Bill to:
Embajada Americana
Boulevard Austriaco 11-51, Zona 16
Nit 347497-6

INVOICE MUST BE SUBMITTED THROUGH THE PAYMENT PORTAL.

***You must attach in PDF format the EFT form to verify that your bank information for payment process is correct.**
*Access to the portal can be requested at:
https://mygrants.servicenowservices.com/mygrants to create an account.
*Click the Create an Account button to open the Choose your Account Type pop-up.
*Click the **Create a mylLMS Vendor Account** button to open the Account Request Form.
*Click the **Please Select Your Language** drop-down to choose a language for the account. Users can update their preferred language at any time. Click Next.
*Fill out the "Account Request Form". On the Embassy field you must select GUATEMALA. Click the Submit button.
*The U.S. Embassy Guatemala will approve the account, and you will receive a confirmation email.
*The vendor will search their inbox for an email from noreply@seicam.state.gov for the **Welcome to Department of State ICAM (SE-ICAM), Activate Your Account!** email and follow the steps to create their Okta accounts.
*Scroll to the bottom of the email and click on the **Activate SE-ICAM Account** button in the activation email to open the **Set-Up Security Methods** page. Click on the Set-Up button under the Password section to create a password for the Okta. Create a password that meets the

password requirements (12 characters that do not include the name of the provider, neither the username, nor the name of the person making the registration) and re-enter the password.
*Click the **Set-Up** button under the **Okta Verify** section to open instructions to download and set up the Okta Verify app. You must configure Okta Verify, sync the telephone number and select a security question.
*Click on the MyGrants button to sign into the Okta account and access the system.
*Review the Rules of Behavior and click the **Agree** button to go to the homepage.
*Attachments shall be legible and in PDF format only.
*The name of the file shall not have more than 40 characters.
*Invoice must include clear and complete description of items and/or services as described in this Purchase Order, including period of service, if applicable.
*Please make sure that the registered email in your account has the capacity to receive notifications.
*All notifications related to the invoice acceptance or any payment notifications, Will be sent to the registered email in your account.
*In chase of specific questions to create your account, you can submit an email to GTMDBO@state.gov

***The IVA form, when applicable, must be downloaded through the virtual agency SAT, https://portal.sat.gob.gt/portal. To access you must login to your virtual agency, in the menu "Servicios" search for the electronic invoice module, select "Consultar DTE", fill out the required fields, search and you will be able to access the IVA form document.**

INVOICES ARE SUBJECT TO REJECTION IF ANY OF THE PREVIOUS REQUIREMENTS ARE MISSING.

For payment inquiries, please contact the FMO Section by email to GTMDBO@state.gov

(c) Contractor Remittance Address. The Government will make payment to the contractor's address stated on the cover page of this contract, unless a separate remittance address is shown below:

_____

_____

_____

(End of clause)

652.237-72 OBSERVANCE OF LEGAL HOLIDAYS AND ADMINISTRATIVE LEAVE (FEB 2015)

(a) The Department of State observes the following days as holidays:

New Year's Day
Martin Luther King's Birthday
Washington's Birthday
Holy Thursday
Good Friday
Guatemala Labor Day

Memorial Day
Juneteenth
Guatemala Army Day
US Independence Day
US Labor Day
Guatemala Independence Day
Columbus Day
Guatemala Revolution Day
All Saints Day
Veterans Day
Thanksgiving Day
Christmas Eve – Half Day
Christmas Day
New Year's Eve – Half Day

*Any other day designated by Federal law, Executive Order, or Presidential Proclamation.

(b) When New Year's Day, Independence Day, Veterans Day or Christmas Day falls on a Sunday, the following Monday is observed; if it falls on Saturday the preceding Friday is observed. Observance of such days by Government personnel shall not be cause for additional period of performance or entitlement to compensation except as set forth in the contract. If the contractor's personnel work on a holiday, no form of holiday or other premium compensation will be reimbursed either as a direct or indirect cost, unless authorized pursuant to an overtime clause elsewhere in this contract.

(c) When the Department of State grants administrative leave to its Government employees, assigned contractor personnel in Government facilities shall also be dismissed. However, the contractor agrees to continue to provide sufficient personnel to perform round-the-clock requirements of critical tasks already in operation or scheduled, and shall be guided by the instructions issued by the contracting officer or his/her duly authorized representative.

(d) For fixed-price contracts, if services are not required or provided because the building is closed due to inclement weather, unanticipated holidays declared by the President, failure of Congress to appropriate funds, or similar reasons, deductions will be computed as follows:

(1) The deduction rate in dollars per day will be equal to the per month contract price divided by 21 days per month.

(2) The deduction rate in dollars per day will be multiplied by the number of days services are not required or provided.

If services are provided for portions of days, appropriate adjustment will be made by the contracting officer to ensure that the contractor is compensated for services provided.

(e) If administrative leave is granted to contractor personnel as a result of conditions stipulated in any "Excusable Delays" clause of this contract, it will be without loss to the contractor. The cost of salaries and wages to the contractor for the period of any such excused absence shall be a reimbursable item of direct cost hereunder for employees whose regular time is normally charged, and a reimbursable item of indirect cost for employees whose time is normally charged indirectly in accordance with the contractors accounting policy.

(End of clause)

652.242-70 CONTRACTING OFFICER'S REPRESENTATIVE (COR) AUG 1999)

(a) The Contracting Officer may designate in writing one or more Government employees, by name or position title, to take action for the Contracting Officer under this contract. Each designee shall be identified as a Contracting Officer's Representative (COR). Such designation(s) shall specify the scope and limitations of the authority so delegated; provided, that the designee shall not change the terms or conditions of the contract, unless the COR is a warranted Contracting Officer and this authority is delegated in the designation.

(b) The COR for this contract is the Facilities Mechanical Engineer.

(End of clause)

652.242-73 AUTHORIZATION AND PERFORMANCE (AUG 1999)

(a) The Contractor warrants the following:

(1) That is has obtained authorization to operate and do business in the country or countries in which this contract will be performed;

(2) That is has obtained all necessary licenses and permits required to perform this contract; and,

(3) That it shall comply fully with all laws, decrees, labor standards, and regulations of said country or countries during the performance of this contract.

(b) If the party actually performing the work will be a subcontractor or joint venture partner, then such subcontractor or joint venture partner agrees to the requirements of paragraph (a) of this clause.

652.243-70 NOTICES (AUG 1999)

Any notice or request relating to this contract given by either party to the other shall be in writing. Said notice or request shall be mailed or delivered by hand to the other party at the address provided in the schedule of the contract. All modifications to the contract must be made in writing by the Contracting Officer.

SECTION 3 - SOLICITATION PROVISIONS

52.212-1 INSTRUCTIONS TO OFFERORS -- COMMERCIAL PRODUCTS AND COMMERCIAL SERVICES (SEP 2023) IS INCORPORATED BY REFERENCE (SEE SF-1449, BLOCK 27A)

ADDENDUM TO 52.212-1

A. Summary of Instructions. Each offer must consist of the following:

A.1. A completed solicitation, in which the SF-1449 cover page (blocks 12, 17, 19-24, and 30 as appropriate), and Section 1 has been filled out.

The Offeror shall include Defense Base Act (DBA) insurance premium costs covering employees. The offeror may obtain DBA insurance directly from any Department of Labor approved providers at the DOL website at *http://www.dol.gov/owcp/dlhwc/lscarrier.htm]*

A.2. Information demonstrating the offeror's/quoter's ability to perform, including:

(1) Name of a Project Manager (or other liaison to the U.S. Embassy/Consulate) who understands written and spoken English;

(2) Evidence that the offeror/quoter operates an established business with a permanent address and telephone listing; in Guatemala or plans to establish an office within 30 days of contract award.

(3) The offeror shall provide proof of SAM registration to include the SAM UEI number.

4. List of clients over the past three years, demonstrating prior experience with relevant past performance information and references (provide dates of contracts, places of performance, value of contracts, contact names, telephone and fax numbers and email addresses). If the offeror has not performed comparable services in Guatemala then the offeror shall provide its international experience. Offerors are advised that the past performance information requested above may be discussed with the client's contact person. In addition, the client's contact person may be asked to comment on the offeror's:

- Quality of services provided under the contract;
- Compliance with contract terms and conditions;
- Effectiveness of management;
- Willingness to cooperate with and assist the customer in routine matters, and when confronted by unexpected difficulties; and
- Business integrity / business conduct.

The Government will use past performance information primarily to assess an offeror's capability to meet the solicitation performance requirements, including the relevance and successful performance of the offeror's work experience. The Government may also use this

data to evaluate the credibility of the offeror's proposal. In addition, the Contracting Officer may use past performance information in making a determination of responsibility.

5. Evidence that the offeror/quoter can provide the necessary personnel, equipment, and financial resources needed to perform the work;

6. The offeror shall address its plan to obtain all licenses and permits required by local law (see DOSAR 652.242-73 in Section 2). If offeror already possesses the locally required licenses and permits, a copy shall be provided.

7. The offeror's strategic plan for preventive maintenance service for potable water treatment plant services to include but not limited to:

(a) A work plan considering all work elements in Section 1, Performance Work Statement.
(b) Identify types and quantities of equipment, supplies and materials required for performance of services under this contract. Identify if the offeror already possesses the listed items and their condition for suitability and if not already possessed or inadequate for use how and when the items will be obtained;
(c) Plan of ensuring quality of services including but not limited to contract administration and oversight; and
(d) (1) If insurance is required by the solicitation, a copy of the Certificate of Insurance(s), **or** (2) a statement that the contractor will get the required insurance, and the name of the insurance provider to be used.

ADDENDUM TO SOLICITATION PROVISIONS
FAR AND DOSAR PROVISIONS NOT PRESCRIBED IN PART 12

52.252-1 SOLICITATION PROVISIONS INCORPORATED BY REFERENCE (FEB 1998)

This solicitation incorporates one or more solicitation provisions by reference, with the same force and effect as if they were given in full text. Upon request, the Contracting Officer will make their full text available. In addition, the full text of a clause may be accessed electronically at Acquisition.gov this address is subject to change.

THE FOLLOWING FEDERAL ACQUISITION REGULATION SOLICITATION PROVISIONS ARE INCORPORATED BY REFERENCE:

PROVISION	TITLE AND DATE
52.204-7	SYSTEM FOR AWARD MANAGEMENT (NOV 2024)
52.204-16	COMMERCIAL AND GOVERNMENT ENTITY CODE REPORTING (AUG 2020)
52.211-1	AVAILABILITY OF SPECIFICATIONS LISTED IN THE GSA INDEX OF FEDERAL SPECIFICATIONS, STANDARDS AND COMMERCIAL ITEM DESCRIPTIONS, FPMR PART 101-29 (SEP 2023)

52.212-1 INSTRUCTIONS TO OFFERORS -- COMMERCIAL PRODUCTS AND COMMERCIAL SERVICES (SEP 2023)

52.214-34 SUBMISSION OF OFFERS IN THE ENGLISH LANGUAGE (APR 1991)

52.237-1 SITE VISIT (APR 1984)

The site visit will be held on Tuesday, August 18th, 2026 at 9:30am (local time) at Boulevard Austriaco 11-51, Zona 16, Guatemala City.

Prospective offerors/quoters should contact Ingrid Cifuentes at CifuentesIG@state.gov for additional information or to arrange entry to the building **no later than Wednesday, August 12, 2026 by 12:00pm.**

THE FOLLOWING DOSAR PROVISION(S) IS/ARE PROVIDED IN FULL TEXT:

652.206-70 ADVOCATE FOR COMPETITION/OMBUDSMAN (FEB 2015)

(a) The Department of State's Advocate for Competition is responsible for assisting industry in removing restrictive requirements from Department of State solicitations and removing barriers to full and open competition and use of commercial items. If such a solicitation is considered competitively restrictive or does not appear properly conducive to competition and commercial practices, potential offerors are encouraged first to contact the contracting office for the solicitation. If concerns remain unresolved, contact:

(1) For solicitations issued by the Office of Acquisition Management (A/GA/AMD) or a Regional Procurement Support Office, the A/GA/AMD Advocate for Competition, at AQMCompetitionAdvocate@state.gov.

(2) For all others, the Department of State Advocate for Competition at cat@state.gov.

(b) The Department of State's Acquisition Ombudsman has been appointed to hear concerns from potential offerors and contractors during the pre-award and post-award phases of this acquisition. The role of the ombudsman is not to diminish the authority of the contracting officer, the Technical Evaluation Panel or Source Evaluation Board, or the selection official. The purpose of the ombudsman is to facilitate the communication of concerns, issues, disagreements, and recommendations of interested parties to the appropriate Government personnel, and work to resolve them. When requested and appropriate, the ombudsman will maintain strict confidentiality as to the source of the concern. The ombudsman does not participate in the evaluation of proposals, the source selection process, or the adjudication of formal contract disputes. Interested parties are invited to contact the contracting activity ombudsman, Mark Mishkin, on +502 2354-0000. For an American Embassy or overseas post, refer to the numbers below for the Department Acquisition Ombudsman. Concerns, issues, disagreements, and recommendations which cannot be resolved at a contracting activity level may be referred to the Department of State Acquisition Ombudsman at (703) 516-1696 or write to: Department of State, Acquisition Ombudsman, Office of Global Acquisitions (A/GA), Suite 1060, SA-15, Washington, DC 20520.

(End of provision)

SECTION 4 - EVALUATION FACTORS

- Award will be made to the lowest priced, acceptable, responsible offeror. The quoter shall submit a completed solicitation, including Sections 1 and 5.

- The Government reserves the right to reject proposals that are unreasonably low or high in price.

- The lowest price will be determined by multiplying the offered prices times the estimated quantities in "Prices - Continuation of SF-1449, block 23", and arriving at a grand total, including all options.

- The Government will determine acceptability by assessing the offeror's compliance with the terms of the RFQ **to include the technical information required by Section 3.**

- The Government will determine contractor responsibility by analyzing whether the apparent successful offeror complies with the requirements of FAR 9.1, including:

  - Adequate financial resources or the ability to obtain them;
  - Ability to comply with the required performance period, taking into consideration all existing commercial and governmental business commitments;
  - Satisfactory record of integrity and business ethics;
  - Necessary organization, experience, and skills or the ability to obtain them;
  - Necessary equipment and facilities or the ability to obtain them; and
  - Be otherwise qualified and eligible to receive an award under applicable laws and regulations.

ADDENDUM TO EVALUATION FACTORS
FAR AND DOSAR PROVISION(S) NOT PRESCRIBED IN PART 12

THE FOLLOWING FAR PROVISION(S) IS/ARE PROVIDED IN FULL TEXT:

52.217-5 EVALUATION OF OPTIONS (JUL 1990)

The Government will evaluate offers for award purposes by adding the total price for all options to the total price for the basic requirement. Evaluation of options will not obligate the Government to exercise the option(s).

52.225-17 EVALUATION OF FOREIGN CURRENCY OFFERS (FEB 2000)

If the Government receives offers in more than one currency, the Government will evaluate offers by converting the foreign currency to United States currency using the exchange rate used by the Embassy in effect as follows:

(a) For acquisitions conducted using sealed bidding procedures, on the date of bid opening.

(b) For acquisitions conducted using negotiation procedures—

(1) On the date specified for receipt of offers, if award is based on initial offers; otherwise

(2) On the date specified for receipt of proposal revisions.

SECTION 5 - REPRESENTATIONS AND CERTIFICATIONS

52.204-24 REPRESENTATION REGARDING CERTAIN TELECOMMUNICATIONS AND VIDEO SURVEILLANCE SERVICES OR EQUIPMENT (NOV 2021)

The Offeror shall not complete the representation at paragraph (d)(1) of this provision if the Offeror has represented that it "does not provide covered telecommunications equipment or services as a part of its offered products or services to the Government in the performance of any contract, subcontract, or other contractual instrument" in paragraph (c)(1) in the provision at 52.204-26, Covered Telecommunications Equipment or Services—Representation, or in paragraph (v)(2)(i) of the provision at 52.212-3, Offeror Representations and Certifications-Commercial Products or Commercial Services. The Offeror shall not complete the representation in paragraph (d)(2) of this provision if the Offeror has represented that it "does not use covered telecommunications equipment or services, or any equipment, system, or service that uses covered telecommunications equipment or services" in paragraph (c)(2) of the provision at 52.204-26, or in paragraph (v)(2)(ii) of the provision at 52.212-3.

(a) *Definitions.* As used in this provision—

Backhaul, covered telecommunications equipment or services, critical technology, interconnection arrangements, reasonable inquiry, roaming, and substantial or essential component have the meanings provided in the clause 52.204-25, Prohibition on Contracting for Certain Telecommunications and Video Surveillance Services or Equipment.

(b) *Prohibition*.

(1) Section 889(a)(1)(A) of the John S. McCain National Defense Authorization Act for Fiscal Year 2019 (Pub. L. 115-232) prohibits the head of an executive agency on or after August 13, 2019, from procuring or obtaining, or extending or renewing a contract to procure or obtain, any equipment, system, or service that uses covered telecommunications equipment or services as a substantial or essential component of any system, or as critical technology as part of any system. Nothing in the prohibition shall be construed to—

(i) Prohibit the head of an executive agency from procuring with an entity to provide a service that connects to the facilities of a third-party, such as backhaul, roaming, or interconnection arrangements; or

(ii) Cover telecommunications equipment that cannot route or redirect user data traffic or cannot permit visibility into any user data or packets that such equipment transmits or otherwise handles.

(2) Section 889(a)(1)(B) of the John S. McCain National Defense Authorization Act for Fiscal Year 2019 (Pub. L. 115-232) prohibits the head of an executive agency on or after August 13, 2020, from entering into a contract or extending or renewing a contract with an entity that uses any equipment, system, or service that uses covered telecommunications equipment or services as a substantial or essential component of any system, or as critical technology as part of any system. This prohibition applies to the use of covered telecommunications equipment or services, regardless of whether that use is in performance of work under a Federal contract. Nothing in the prohibition shall be construed to—

(i) Prohibit the head of an executive agency from procuring with an entity to provide a service that connects to the facilities of a third-party, such as backhaul, roaming, or interconnection arrangements; or

(ii) Cover telecommunications equipment that cannot route or redirect user data traffic or cannot permit visibility into any user data or packets that such equipment transmits or otherwise handles.

(c) *Procedures.* The Offeror shall review the list of excluded parties in the System for Award Management (SAM) (https://www.sam.gov) for entities excluded from receiving federal awards for "covered telecommunications equipment or services".

(d) *Representation.* The Offeror represents that—

(1) It □ will, □ will not provide covered telecommunications equipment or services to the Government in the performance of any contract, subcontract or other contractual instrument resulting from this solicitation. The Offeror shall provide the additional disclosure information required at paragraph (e)(1) of this section if the Offeror responds "will" in paragraph (d)(1) of this section; and

(2) After conducting a reasonable inquiry, for purposes of this representation, the Offeror represents that—

It □ does, □ does not use covered telecommunications equipment or services, or use any equipment, system, or service that uses covered telecommunications equipment or services. The Offeror shall provide the additional disclosure information required at paragraph (e)(2) of this section if the Offeror responds "does" in paragraph (d)(2) of this section.

(e) *Disclosures.*
(1) Disclosure for the representation in paragraph (d)(1) of this provision. If the Offeror has responded "will" in the representation in paragraph (d)(1) of this provision, the Offeror shall provide the following information as part of the offer:

(i) For covered equipment—

(A) The entity that produced the covered telecommunications equipment (include entity name, unique entity identifier, CAGE code, and whether the entity was the original equipment manufacturer (OEM) or a distributor, if known);

(B) A description of all covered telecommunications equipment offered (include brand; model number, such as OEM number, manufacturer part number, or wholesaler number; and item description, as applicable); and

(C) Explanation of the proposed use of covered telecommunications equipment and any factors relevant to determining if such use would be permissible under the prohibition in paragraph (b)(1) of this provision.

(ii) For covered services—

(A) If the service is related to item maintenance: A description of all covered telecommunications services offered (include on the item being maintained: Brand; model number, such as OEM number, manufacturer part number, or wholesaler number; and item description, as applicable); or

(B) If not associated with maintenance, the Product Service Code (PSC) of the service being provided; and explanation of the proposed use of covered telecommunications services and any factors relevant to determining if such use would be permissible under the prohibition in paragraph (b)(1) of this provision.

(2) Disclosure for the representation in paragraph (d)(2) of this provision. If the Offeror has responded "does" in the representation in paragraph (d)(2) of this provision, the Offeror shall provide the following information as part of the offer:

(i) For covered equipment—

(A) The entity that produced the covered telecommunications equipment (include entity name, unique entity identifier, CAGE code, and whether the entity was the OEM or a distributor, if known);

(B) A description of all covered telecommunications equipment offered (include brand; model number, such as OEM number, manufacturer part number, or wholesaler number; and item description, as applicable); and

(C) Explanation of the proposed use of covered telecommunications equipment and any factors relevant to determining if such use would be permissible under the prohibition in paragraph (b)(2) of this provision.

(ii) For covered services—

(A) If the service is related to item maintenance: A description of all covered telecommunications services offered (include on the item being maintained: Brand; model number, such as OEM number, manufacturer part number, or wholesaler number; and item description, as applicable); or

(B) If not associated with maintenance, the PSC of the service being provided; and explanation of the proposed use of covered telecommunications services and any factors relevant to determining if such use would be permissible under the prohibition in paragraph (b)(2) of this provision.
(End of provision)

52.204-26 COVERED TELECOMMUNICATIONS EQUIPMENT OR SERVICES REPRESENTATION (OCT 2020)

(a) *Definitions.* As used in this provision, "covered telecommunications equipment or services" and "reasonable inquiry" have the meaning provided in the clause 52.204-25, Prohibition on Contracting for Certain Telecommunications and Video Surveillance Services or Equipment.

(b) *Procedures.* The Offeror shall review the list of excluded parties in the System for Award Management (SAM) (*https://www.sam.gov*) for entities excluded from receiving federal awards for "covered telecommunications equipment or services".

(c) *Representations.* (1) The Offeror represents that it [ ] does, [ ] does not provide covered telecommunications equipment or services as a part of its offered products or services to the Government in the performance of any contract, subcontract, or other contractual instrument.

(2) After conducting a reasonable inquiry for purposes of this representation, the Offeror represents that it [ ] does, [ ] does not use covered telecommunications equipment or services, or any equipment, system, or service that uses covered telecommunications equipment or services.

(End of provision)

52.212-3 OFFEROR REPRESENTATIONS AND CERTIFICATIONS—COMMERCIAL PRODUCTS AND COMMERCIAL SERVICES (OCT 2025)

The Offeror shall complete only paragraph (b) of this provision if the Offeror has completed the annual representations and certification electronically in the System for Award Management (SAM) accessed through https://www.sam.gov. If the Offeror has not completed the annual representations and certifications electronically, the Offeror shall complete only paragraphs (c) through (v) of this provision.

(a) *Definitions*. As used in this provision—

Covered telecommunications equipment or services has the meaning provided in the clause 52.204-25, Prohibition on Contracting for Certain Telecommunications and Video Surveillance Services or Equipment.

Economically disadvantaged women-owned small business (EDWOSB) concern means a small business concern that is at least 51 percent directly and unconditionally owned by, and the management and daily business operations of which are controlled by, one or more women who are citizens of the United States and who are economically disadvantaged in accordance with 13 CFR part 127, and the concern is certified by SBA or an approved third-party certifier in accordance with 13 CFR 127.300. It automatically qualifies as a women-owned small business eligible under the WOSB Program.

Forced or indentured child labor means all work or service—

(1) Exacted from any person under the age of 18 under the menace of any penalty for its nonperformance and for which the worker does not offer himself voluntarily; or

(2) Performed by any person under the age of 18 pursuant to a contract the enforcement of which can be accomplished by process or penalties.

Highest-level owner means the entity that owns or controls an immediate owner of the offeror, or that owns or controls one or more entities that control an immediate owner of the offeror. No entity owns or exercises control of the highest level owner.

Immediate owner means an entity, other than the offeror, that has direct control of the offeror. Indicators of control include, but are not limited to, one or more of the following: ownership or interlocking management, identity of interests among family members, shared facilities and equipment, and the common use of employees.

Inverted domestic corporation, means a foreign incorporated entity that meets the definition of an inverted domestic corporation under 6 U.S.C. 395(b), applied in accordance with the rules and definitions of 6 U.S.C. 395(c).

Manufactured end product means any end product in product and service codes (PSCs) 1000-9999, except—

(1) PSC 5510, Lumber and Related Basic Wood Materials;
(2) Product or Service Group (PSG) 87, Agricultural Supplies;
(3) PSG 88, Live Animals;
(4) PSG 89, Subsistence;
(5) PSC 9410, Crude Grades of Plant Materials;
(6) PSC 9430, Miscellaneous Crude Animal Products, Inedible;
(7) PSC 9440, Miscellaneous Crude Agricultural and Forestry Products;
(8) PSC 9610, Ores;
(9) PSC 9620, Minerals, Natural and Synthetic; and
(10) PSC 9630, Additive Metal Materials.

Place of manufacture means the place where an end product is assembled out of components, or otherwise made or processed from raw materials into the finished product that is to be provided to the Government. If a product is disassembled and reassembled, the place of reassembly is not the place of manufacture.

Predecessor means an entity that is replaced by a successor and includes any predecessors of the predecessor.

Reasonable inquiry has the meaning provided in the clause 52.204-25, Prohibition on Contracting for Certain Telecommunications and Video Surveillance Services or Equipment.

Restricted business operations means business operations in Sudan that include power production activities, mineral extraction activities, oil-related activities, or the production of military equipment, as those terms are defined in the Sudan Accountability and Divestment Act of 2007 (Pub. L. 110-174). Restricted business operations do not include business operations that the person (as that term is defined in Section 2 of the Sudan Accountability and Divestment Act of 2007) conducting the business can demonstrate—
(1) Are conducted under contract directly and exclusively with the regional government of southern Sudan;
(2) Are conducted pursuant to specific authorization from the Office of Foreign Assets Control in the Department of the Treasury, or are expressly exempted under Federal law from the requirement to be conducted under such authorization;
(3) Consist of providing goods or services to marginalized populations of Sudan;
(4) Consist of providing goods or services to an internationally recognized peacekeeping force or humanitarian organization;
(5) Consist of providing goods or services that are used only to promote health or education; or
(6) Have been voluntarily suspended. "Sensitive technology"—
Sensitive technology—
(1) Means hardware, software, telecommunications equipment, or any other technology that is to be used specifically—
(i) To restrict the free flow of unbiased information in Iran; or
(ii) To disrupt, monitor, or otherwise restrict speech of the people of Iran; and
(2) Does not include information or informational materials the export of which the President does not have the authority to regulate or prohibit pursuant to section 203(b)(3)of the International Emergency Economic Powers Act (50 U.S.C. 1702(b)(3)).
Service-disabled veteran-owned small business (SDVOSB) concern means a small business concern—
(1)
(i) Not less than 51 percent of which is owned and controlled by one or more service-disabled veterans or, in the case of any publicly owned business, not less than 51 percent of the stock of which is owned by one or more service-disabled veterans; and
(ii) The management and daily business operations of which are controlled by one or more service-disabled veterans or, in the case of a service-disabled veteran with permanent and severe disability, the spouse or permanent caregiver of such veteran; or
(2) A small business concern eligible under the SDVOSB Program in accordance with 13 CFR part 128 (see subpart 19.14).
(3) *Service-disabled veteran*, as used in this definition, means a veteran as defined in 38 U.S.C. 101(2), with a disability that is service connected, as defined in 38 U.S.C. 101(16), and who is registered in the Beneficiary Identification and Records Locator Subsystem, or successor system that is maintained by the Department of Veterans Affairs' Veterans Benefits Administration, as a service-disabled veteran.
Service-disabled veteran-owned small business (SDVOSB) concern eligible under the SDVOSB Program means an SDVOSB concern that—
(1) Effective January 1, 2024, is designated in the System for Award Management (SAM) as certified by the Small Business Administration (SBA) in accordance with 13 CFR 128.300; or
(2) Has represented that it is an SDVOSB concern in SAM and submitted a complete application for certification to SBA on or before December 31, 2023.
Service-disabled veteran-owned small business (SDVOSB) Program means a program that authorizes contracting officers to limit competition, including award on a sole-source basis, to SDVOSB concerns eligible under the SDVOSB Program.
Small business concern—
(1) Means a concern, including its affiliates, that is independently owned and operated, not dominant in its field of operation, and qualified as a small business under the criteria in 13 CFR part 121 and size standards in this solicitation.

(2) *Affiliates*, as used in this definition, means business concerns, one of whom directly or indirectly controls or has the power to control the others, or a third party or parties control or have the power to control the others. In determining whether affiliation exists, consideration is given to all appropriate factors including common ownership, common management, and contractual relationships. SBA determines affiliation based on the factors set forth at 13 CFR 121.103.
Small disadvantaged business concern, consistent with 13 CFR 124.1001, means a small business concern under the size standard applicable to the acquisition, that—
(1) Is at least 51 percent unconditionally and directly owned (as defined at 13 CFR 124.105) by—
(i) One or more socially disadvantaged (as defined at13 CFR 124.103) and economically disadvantaged (as defined at 13 CFR 124.104) individuals who are citizens of the United States; and
(ii) Each individual claiming economic disadvantage has a net worth not exceeding the threshold at 13 CFR 124.104(c)(2) after taking into account the applicable exclusions set forth at 13 CFR124.104(c)(2); and
(2) The management and daily business operations of which are controlled (as defined at 13.CFR 124.106) by individuals, who meet the criteria in paragraphs (1)(i) and (ii) of this definition.
Subsidiary means an entity in which more than 50 percent of the entity is owned—
(1) Directly by a parent corporation; or
(2) Through another subsidiary of a parent corporation
Successor means an entity that has replaced a predecessor by acquiring the assets and carrying out the affairs of the predecessor under a new name (often through acquisition or merger). The term "successor" does not include new offices/divisions of the same company or a company that only changes its name. The extent of the responsibility of the successor for the liabilities of the predecessor may vary, depending on State law and specific circumstances.
Veteran-owned small business concern means a small business concern—
(1) Not less than 51 percent of which is owned and controlled by one or more veterans (as defined at 38 U.S.C. 101(2)) or, in the case of any publicly owned business, not less than 51 percent of the stock of which is owned by one or more veterans; and
(2) The management and daily business operations of which are controlled by one or more veterans.
Women-owned business concern means a concern which is at least 51 percent owned by one or more women; or in the case of any publicly owned business, at least 51 percent of its stock is owned by one or more women; and whose management and daily business operations are controlled by one or more women
Women-owned small business concern means a small business concern—
(1) That is at least 51 percent owned by one or more women; or, in the case of any publicly owned business, at least51 percent of the stock of which is owned by one or more women; and
(2) Whose management and daily business operations are controlled by one or more women.
Women-owned small business (WOSB) concern eligible under the WOSB Program (in accordance with 13 CFR part 127), means a small business concern that is at least 51 percent directly and unconditionally owned by, and the management and daily business operations of which are controlled by, one or more women who are citizens of the United States, and the concern is certified by SBA or an approved third-party certifier in accordance with 13 CFR 127.300.
(b)
(1) *Annual Representations and Certifications*. Any changes provided by the Offeror in paragraph (b)(2) of this provision do not automatically change the representations and certifications in SAM.
(2) The offeror has completed the annual representations and certifications electronically in SAM accessed through http://www.sam.gov. After reviewing SAM information, the Offeror verifies by submission of this offer that the representations and certifications currently posted electronically at FAR 52.212-3, Offeror Representations and Certifications-Commercial Products and Commercial Services, have been entered or updated in the last 12 months, are current, accurate, complete, and applicable to this solicitation (including the business size standard(s) applicable to the NAICS code(s) referenced for this solicitation), at the time

this offer is submitted and are incorporated in this offer by reference (see FAR 4.1201), except for paragraphs __.
[*Offeror to identify the applicable paragraphs at (c) through (v) of this provision that the offeror has completed for the purposes of this solicitation only, if any.*
These amended representation(s) and/or certification(s) are also incorporated in this offer and are current, accurate, and complete as of the date of this offer.
Any changes provided by the offeror are applicable to this solicitation only, and do not result in an update to the representations and certifications posted electronically on SAM.]
(c) Offerors must complete the following representations when the resulting contract is for supplies to be delivered or services to be performed in the United States or its outlying areas, or when the contracting officer has applied part 19 in accordance with 19.000(b)(1)(ii). Check all that apply.
(1) *Small business concern*. The offeror represents as part of its offer that—
(i) It □ is, □ is not a small business concern; or
(ii) It □ is, □ is not a small business joint venture that complies with the requirements of 13 CFR 121.103(h) and 13 CFR 125.8(a) and (b). [*The offeror shall enter the name and unique entity identifier of each party to the joint venture:* _____.]
(2) *Veteran-owned small business concern*. [*Complete only if the offeror represented itself as a small business concern in paragraph (c)(1) of this provision*.] The offeror represents as part of its offer that it □ is, □ is not a veteran-owned small business concern.
(3) *SDVOSB concern.* [*Complete only if the offeror represented itself as a veteran-owned small business concern in paragraph (c)(2) of this provision.*] The offeror represents that it □ is, □ is not an SDVOSB concern.
(4) *SDVOSB concern joint venture eligible under the SDVOSB Program*. The offeror represents that it □ is, □ is not an SDVOSB joint venture eligible under the SDVOSB Program that complies with the requirements of 13 CFR 128.402. [*Complete only if the offeror represented itself as an SDVOSB concern in paragraph (c)(3) of this provision.*] [*The offeror shall enter the name and unique entity identifier of each party to the joint venture:* _____.]
(5) *Small disadvantaged business concern. [Complete only if the offeror represented itself as a small business concern in paragraph (c)(1) of this provision.]* The offeror represents that it □ is, □ is not a small disadvantaged business concern as defined in 13 CFR 124.1001.
(6) *Women-owned small business concern*. [*Complete only if the offeror represented itself as a small business concern in paragraph (c)(1) of this provision*.] The offeror represents that it □ is, □ is not a women-owned small business concern.
(7) *WOSB joint venture eligible under the WOSB Program.* The offeror represents that it □ is, □ is not a joint venture that complies with the requirements of 13 CFR 127.506(a) through (c). [*The offeror shall enter the name and unique entity identifier of each party to the joint venture:* _____.]
(8) *Economically disadvantaged women-owned small business (EDWOSB) joint venture.* The offeror represents that it □ is, □ is not a joint venture that complies with the requirements of 13 CFR 127.506(a) through (c). [*The offeror shall enter the name and unique entity identifier of each party to the joint venture:* _____.]
Note to paragraphs (c)(9) and (10): Complete paragraphs (c)(9) and (10) only if this solicitation is expected to exceed the simplified acquisition threshold.
(9) *Women-owned business concern (other than small business concern*). [*Complete only if the offeror is a women-owned business concern and did not represent itself as a small business concern in paragraph (c)(1) of this provision*.] The offeror represents that it □ is a women-owned business concern.
(10) *Tie bid priority for labor surplus area concerns*. If this is an invitation for bid, small business offerors may identify the labor surplus areas in which costs to be incurred on account of manufacturing or production (by offeror or first-tier subcontractors) amount to more than 50 percent of the contract price:_____

(11) *HUBZone small business concern*. [*Complete only if the offeror represented itself as a small business concern in paragraph (c)(1) of this provision*.] The offeror represents, as part of its offer, that–
(i) It □ is, □ is not a HUBZone small business concern listed, on the date of this representation, as having been certified by SBA as a HUBZone small business concern in the Dynamic Small Business Search and SAM, and will attempt to maintain an employment rate of HUBZone residents of 35 percent of its employees during performance of a HUBZone contract (see 13 CFR 126.200(e)(1)); and
(ii) It □ is, □ is not a HUBZone joint venture that complies with the requirements of 13 CFR 126.616(a) through (c). [*The offeror shall enter the name and unique entity identifier of each party to the joint venture:* _____.] Each HUBZone small business concern participating in the HUBZone joint venture shall provide representation of its HUBZone status.
(d) Representations required to implement provisions of Executive Order 11246-

(1) Previous contracts and compliance. The offeror represents that-
(i) It □ has, □ has not participated in a previous contract or subcontract subject to the Equal Opportunity clause of this solicitation; and
(ii) It □ has, □ has not filed all required compliance reports.
(2) *Affirmative Action Compliance*. The offeror represents that-
(i) It □ has developed and has on file, □ has not developed and does not have on file, at each establishment, affirmative action programs required by rules and regulations of the Secretary of Labor (41 CFR parts 60-1 and 60-2), or
(ii) It □ has not previously had contracts subject to the written affirmative action programs requirement of the rules and regulations of the Secretary of Labor.
(e) *Certification Regarding Payments to Influence Federal Transactions (31 http://uscode.house.gov/ U.S.C. 1352)*. (Applies only if the contract is expected to exceed $200,000.) By submission of its offer, the offeror certifies to the best of its knowledge and belief that no Federal appropriated funds have been paid or will be paid to any person for influencing or attempting to influence an officer or employee of any agency, a Member of Congress, an officer or employee of Congress or an employee of a Member of Congress on his or her behalf in connection with the award of any resultant contract. If any registrants under the Lobbying Disclosure Act of 1995 have made a lobbying contact on behalf of the offeror with respect to this contract, the offeror shall complete and submit, with its offer, OMB Standard Form LLL, Disclosure of Lobbying Activities, to provide the name of the registrants. The offeror need not report regularly employed officers or employees of the offeror to whom payments of reasonable compensation were made.
(f) *Buy American Certificate*. (Applies only if the clause at Federal Acquisition Regulation (FAR) 52.225-1, Buy American-Supplies, is included in this solicitation.)
(1)
(i) The Offeror certifies that each end product, except those listed in paragraph (f)(2) of this provision, is a domestic end product and that each domestic end product listed in paragraph (f)(3) of this provision contains a critical component.
(ii) The Offeror shall list as foreign end products those end products manufactured in the United States that do not qualify as domestic end products. For those foreign end products that do not consist wholly or predominantly of iron or steel or a combination of both, the Offeror shall also indicate whether these foreign end products exceed 55 percent domestic content, except for those that are COTS items. If the percentage of the domestic content is unknown, select “no”.
(iii) The Offeror shall separately list the line item numbers of domestic end products that contain a critical component (see FAR 25.105).
(iv) The terms “commercially available off-the-shelf (COTS) item,” “critical component,” “domestic end product,” "end product," "foreign end product," and "United States" are defined in the clause of this solicitation entitled "Buy American-Supplies."
(2) Foreign End Products:

Line Item No.	Country of Origin	Exceeds 55% domestic content (yes/no)

[*List as necessary*]

(3) Domestic end products containing a critical component:

Line Item No. ___

[*List as necessary*]

(4) The Government will evaluate offers in accordance with the policies and procedures of FAR part 25.

(g)

(1) *Buy American-Free Trade Agreements-Israeli Trade Act Certificate*. (Applies only if the clause at FAR 52.225-3, Buy American-Free Trade Agreements-Israeli Trade Act, is included in this solicitation.)

(i)

(A) The Offeror certifies that each end product, except those listed in paragraph (g)(1)(ii) or (iii) of this provision, is a domestic end product and that each domestic end product listed in paragraph (g)(1)(iv) of this provision contains a critical component.

(B) The terms "Bahraini, Moroccan, Omani, Panamanian, or Peruvian end product," "commercially available off-the-shelf (COTS) item," "critical component," "domestic end product," "end product," "foreign end product," "Free Trade Agreement country," "Free Trade Agreement country end product," "Israeli end product," and "United States" are defined in the clause of this solicitation entitled "Buy American-Free Trade Agreements-Israeli Trade Act."

(ii) The Offeror certifies that the following supplies are Free Trade Agreement country end products (other than Bahraini, Moroccan, Omani, Panamanian, or Peruvian end products) or Israeli end products as defined in the clause of this solicitation entitled "Buy American-Free Trade Agreements-Israeli Trade Act."

Free Trade Agreement Country End Products (Other than Bahraini, Moroccan, Omani, Panamanian, or Peruvian End Products) or *Israeli End Products*:

Line Item No.	Country of Origin

[*List as necessary*]

(iii) The Offeror shall list those supplies that are foreign end products (other than those listed in paragraph (g)(1)(ii) of this provision) as defined in the clause of this solicitation entitled "Buy American-Free Trade Agreements-Israeli Trade Act." The Offeror shall list as other foreign end products those end products manufactured in the United States that do not qualify as domestic end products. For those foreign end products that do not consist wholly or predominantly of iron or steel or a combination of both, the Offeror shall also indicate whether these foreign end products exceed 55 percent domestic content, except for those that are COTS items. If the percentage of the domestic content is unknown, select “no”.

Other Foreign End Products:

Line Item No.	Country of Origin	Exceeds 55% domestic content (yes/no)

[List as necessary]

(iv) The Offeror shall list the line item numbers of domestic end products that contain a critical component (see FAR 25.105).

Line Item No. ___

[List as necessary]

(v) The Government will evaluate *offers* in accordance with the policies and procedures of FAR part 25.

(2) *Buy American-Free Trade Agreements-Israeli Trade Act Certificate, Alternate II*. If Alternate II to the clause at FAR 52.225-3 is included in this solicitation, substitute the following paragraph (g)(1)(ii) for paragraph (g)(1)(ii) of the basic provision:

(g)(1)(ii) The offeror certifies that the following supplies are Israeli end products as defined in the clause of this solicitation entitled "Buy American—Free Trade Agreements—Israeli Trade Act":

Israeli End Products:

Line Item No.

[*List as necessary*]

(3) *Buy American-Free Trade Agreements-Israeli Trade Act Certificate, Alternate III*. If Alternate III to the clause at 52.225-3 is included in this solicitation, substitute the following paragraphs (g)(1)(i)(B) and (g)(1)(ii) for paragraphs (g)(1)(i)(B) and (g)(1)(ii) of the basic provision:

(g)(1)(i)(B) The terms "Korean end product", "commercially available off-the-shelf (COTS) item," "critical component," "domestic end product," "end product," "foreign end product," "Free Trade Agreement country," "Free Trade Agreement country end product," "Israeli end product," and "United States" are defined in the clause of this solicitation entitled "Buy American—Free Trade Agreements—Israeli Trade Act."

(g)(1)(ii) The Offeror certifies that the following supplies are Korean end products or Israeli end products as defined in the clause of this solicitation entitled "Buy American—Free Trade Agreements—Israeli Trade Act":

Korean End Products or Israeli End Products:

Line Item No.	Country of Origin

[*List as necessary*]

(4) *Trade Agreements Certificate*. (Applies only if the clause at FAR 52.225-5, Trade Agreements, is included in this solicitation.)

(i) The offeror certifies that each end product, except those listed in paragraph (g)(4)(ii) of this provision, is a U.S.-made or designated country end product, as defined in the clause of this solicitation entitled "Trade Agreements."

(ii) The offeror shall list as other end products those end products that are not U.S.-made or designated country end products.

Other End Products:

Line Item No.	Country of Origin

[*List as necessary*]

(iii) The Government will evaluate offers in accordance with the policies and procedures of FAR part 25. For line items covered by the WTO GPA, the Government will evaluate offers of U.S.-made or designated country end products without regard to the restrictions of the Buy American statute. The Government will consider for award only offers of U.S.-made or designated country end products unless the Contracting Officer determines that there are no offers for such products or that the offers for such products are insufficient to fulfill the requirements of the solicitation.

(h) *Certification Regarding Responsibility Matters (Executive Order 12689*). (Applies only if the contract value is expected to exceed the simplified acquisition threshold.) The offeror certifies, to the best of its knowledge and belief, that the offeror and/or any of its principals–
(1) □ Are, □ are not presently debarred, suspended, proposed for debarment, or declared ineligible for the award of contracts by any Federal agency;
(2) □ Have, □ have not, within a three-year period preceding this offer, been convicted of or had a civil judgment rendered against them for: commission of fraud or a criminal offense in connection with obtaining, attempting to obtain, or performing a Federal, state or local government contract or subcontract; violation of Federal or state antitrust statutes relating to the submission of offers; or commission of embezzlement, theft, forgery, bribery, falsification or destruction of records, making false statements, tax evasion, violating Federal criminal tax laws, or receiving stolen property;
(3) □ Are, □ are not presently indicted for, or otherwise criminally or civilly charged by a Government entity with, commission of any of these offenses enumerated in paragraph (h)(2) of this clause; and
(4) □ Have, □ have not, within a three-year period preceding this offer, been notified of any delinquent Federal taxes in an amount that exceeds the threshold at 9.104-5(a)(2) for which the liability remains unsatisfied.
(i) Taxes are considered delinquent if both of the following criteria apply:
(A) *The tax liability is finally determined*. The liability is finally determined if it has been assessed. A liability is not finally determined if there is a pending administrative or judicial challenge. In the case of a judicial challenge to the liability, the liability is not finally determined until all judicial appeal rights have been exhausted.
(B) *The taxpayer is delinquent in making payment*. A taxpayer is delinquent if the taxpayer has failed to pay the tax liability when full payment was due and required. A taxpayer is not delinquent in cases where enforced collection action is precluded.
(ii) *Examples*.

(A) The taxpayer has received a statutory notice of deficiency, under I.R.C. §6212, which entitles the taxpayer to seek Tax Court review of a proposed tax deficiency. This is not a delinquent tax because it is not a final tax liability. Should the taxpayer seek Tax Court review, this will not be a final tax liability until the taxpayer has exercised all judicial appeal rights.
(B) The IRS has filed a notice of Federal tax lien with respect to an assessed tax liability, and the taxpayer has been issued a notice under I.R.C. §6320 entitling the taxpayer to request a hearing with the IRS Office of Appeals contesting the lien filing, and to further appeal to the Tax Court if the IRS determines to sustain the lien filing. In the course of the hearing, the taxpayer is entitled to contest the underlying tax liability because the taxpayer has had no prior opportunity to contest the liability. This is not a delinquent tax because it is not a final tax liability. Should the taxpayer seek tax court review, this will not be a final tax liability until the taxpayer has exercised all judicial appeal rights.
(C) The taxpayer has entered into an installment agreement pursuant to I.R.C. §6159. The taxpayer is making timely payments and is in full compliance with the agreement terms. The taxpayer is not delinquent because the taxpayer is not currently required to make full payment.
(D) The taxpayer has filed for bankruptcy protection. The taxpayer is not delinquent because enforced collection action is stayed under 11 U.S.C. §362 (the Bankruptcy Code).
(i) *Certification Regarding Knowledge of Child Labor for Listed End Products (Executive Order 13126). [The Contracting Officer must list in paragraph (i)(1) any end products being acquired under this solicitation that are included in the List of Products Requiring Contractor Certification as to Forced or Indentured Child Labor, unless excluded at 22.1503(b).]*
(1) *Listed end products.*

Listed End Product	Listed Countries of Origin

(2) *Certification. [If the Contracting Officer has identified end products and countries of origin in paragraph (i)(1) of this provision, then the offeror must certify to either (i)(2)(i) or (i)(2)(ii) by checking the appropriate block.]*

☐ (i) *The* offeror *will not supply any* end product *listed in paragraph (i)(1) of this provision that was mined, produced, or manufactured in the corresponding country as listed for that product.*

☐ (ii) *The* offeror may *supply an* end product *listed in paragraph (i)(1) of this provision that was mined, produced, or manufactured in the corresponding country as listed for that product. The* offeror *certifies that it has made a good faith effort to determine whether forced or indentured child labor was used to mine, produce, or manufacture any such end product furnished under this contract. On the basis of those efforts, the* offeror *certifies that it is not aware of any such use of child labor.*

(j) *Place of manufacture.* (Does not apply unless the solicitation is predominantly for the acquisition of manufactured end products.) For statistical purposes only, the offeror shall indicate whether the place of manufacture of the end products it expects to provide in response to this solicitation is predominantly-

(1) □ In the United States (Check this box if the total anticipated price of offered end products manufactured in the United States exceeds the total anticipated price of offered end products manufactured outside the United States); or

(2) □ Outside the United States.

(k) *Certificates regarding exemptions from the application of the Service Contract Labor Standards* (Certification by the offeror as to its compliance with respect to the contract also constitutes its certification as to compliance by its subcontractor if it subcontracts out the exempt services.) [*The contracting officer is to check a box to indicate if paragraph (k)(1) or (k)(2) applies.*]

☐ (1) *Maintenance, calibration, or repair of certain equipment as described in FAR* 22.1003-4(c)(1). The offeror □ does □ does not certify that–

(i) The items of equipment to be serviced under this contract are used regularly for other than Governmental purposes and are sold or traded by the offeror (or subcontractor in the case of an exempt subcontract) in substantial quantities to the general public in the course of normal business operations;

(ii) The services will be furnished at prices which are, or are based on, established catalog or market prices (see FAR 22.1003-4(c)(2)(ii)) for the maintenance, calibration, or repair of such equipment; and

(iii) The compensation (wage and fringe benefits) plan for all service employees performing work under the contract will be the same as that used for these employees and equivalent employees servicing the same equipment of commercial customers.

☐ (2) *Certain services as described in FAR* 22.1003-4(d)(1). The offeror □ does □ does not certify that-

(i) The services under the contract are offered and sold regularly to non-Governmental customers, and are provided by the offeror (or subcontractor in the case of an exempt subcontract) to the general public in substantial quantities in the course of normal business operations;

(ii) The contract services will be furnished at prices that are, or are based on, established catalog or market prices (see FAR 22.1003-4(d)(2)(iii));

(iii) Each service employee who will perform the services under the contract will spend only a small portion of his or her time (a monthly average of less than 20 percent of the available hours on an annualized basis, or less than 20 percent of available hours during the contract period if the contract period is less than a month) servicing the Government contract; and

(iv) The compensation (wage and fringe benefits) plan for all service employees performing work under the contract is the same as that used for these employees and equivalent employees servicing commercial customers.

(3) If paragraph (k)(1) or (k)(2) of this clause applies–

(i) If the offeror does not certify to the conditions in paragraph (k)(1) or (k)(2) and the Contracting Officer did not attach a Service Contract Labor Standards wage determination to the solicitation, the offeror shall notify the Contracting Officer as soon as possible; and

(ii) The Contracting Officer may not make an award to the offeror if the offeror fails to execute the certification in paragraph (k)(1) or (k)(2) of this clause or to contact the Contracting Officer as required in paragraph (k)(3)(i) of this clause.
(l) *Taxpayer Identification Number (TIN) (* 26 U.S.C. 6109, 31 U.S.C. 7701). (Not applicable if the offeror is required to provide this information to the SAM to be eligible for award.)
(1) All offerors must submit the information required in paragraphs (l)(3) through (l)(5) of this provision to comply with debt collection requirements of 31 U.S.C. 7701(c) and 3325(d), reporting requirements of 26 U.S.C. 6041, 6041A, and 6050M, and implementing regulations issued by the Internal Revenue Service (IRS).
(2) The TIN may be used by the Government to collect and report on any delinquent amounts arising out of the offeror's relationship with the Government (31 U.S.C. 7701(c)(3)). If the resulting contract is subject to the payment reporting requirements described in FAR 4.904, the TIN provided hereunder may be matched with IRS records to verify the accuracy of the offeror's TIN.
(3) *Taxpayer Identification Number (TIN)*.
☐TIN: _____.
☐TIN has been applied for.
☐TIN is not required because:
☐Offeror is a nonresident alien, foreign corporation, or foreign partnership that does not have income effectively connected with the conduct of a trade or business in the United States and does not have an office or place of business or a fiscal paying agent in the United States;
☐Offeror is an agency or instrumentality of a foreign government;
☐Offeror is an agency or instrumentality of the Federal Government.
(4) *Type of organization*.
☐Sole proprietorship;
☐Partnership;
☐Corporate entity (not tax-exempt);
☐Corporate entity (tax-exempt);
☐Government entity (Federal, State, or local);
☐Foreign government;
☐International organization per 26 CFR1.6049-4;
☐Other _____.
(5) *Common parent*.
☐Offeror is not owned or controlled by a common parent;
☐Name and TIN of common parent:
Name _____.
TIN _____.
(m) *Restricted business operations in Sudan*. By submission of its offer, the offeror certifies that the offeror does not conduct any restricted business operations in Sudan.
(n) Prohibition on Contracting with Inverted Domestic Corporations.

(1) Government agencies are not permitted to use appropriated (or otherwise made available) funds for contracts with either an inverted domestic corporation, or a subsidiary of an inverted domestic corporation, unless the exception at 9.108-2(b) applies or the requirement is waived in accordance with the procedures at 9.108-4.
(2) *Representation*. The Offeror represents that–
(i) It □ is, □ is not an inverted domestic corporation; and
(ii) It □ is, □ is not a subsidiary of an inverted domestic corporation.
(o) Prohibition on contracting with entities engaging in certain activities or transactions relating to Iran.

(1) The offeror shall e-mail questions concerning sensitive technology to the Department of State at CISADA106@state.gov.

(2) *Representation and Certifications*. Unless a waiver is granted or an exception applies as provided in paragraph (o)(3) of this provision, by submission of its offer, the offeror-
(i) Represents, to the best of its knowledge and belief, that the offeror does not export any sensitive technology to the government of Iran or any entities or individuals owned or controlled by, or acting on behalf or at the direction of, the government of Iran;
(ii) Certifies that the offeror, or any person owned or controlled by the offeror, does not engage in any activities for which sanctions may be imposed under section 5 of the Iran Sanctions Act; and
(iii) Certifies that the offeror, and any person owned or controlled by the offeror, does not knowingly engage in any transaction that exceeds the threshold at FAR 25.703-2(a)(2) with Iran's Revolutionary Guard Corps or any of its officials, agents, or affiliates, the property and interests in property of which are blocked pursuant to the International Emergency Economic Powers Act (et seq.) (see OFAC's Specially Designated Nationals and Blocked Persons List at https://www.treasury.gov/resource-center/sanctions/SDN-List/Pages/default.aspx).
(3) The representation and certification requirements of paragraph (o)(2) of this provision do not apply if-
(i) This solicitation includes a trade agreements certification (*e.g.*, 52.212-3(g) or a comparable agency provision); and
(ii) The offeror has certified that all the offered products to be supplied are designated country end products.
(p) *Ownership or Control of Offeror*. (Applies in all solicitations when there is a requirement to be registered in SAM or a requirement to have a unique entity identifier in the solicitation).
(1) The Offeror represents that it □ has or □ does not have an immediate owner. If the Offeror has more than one immediate owner (such as a joint venture), then the Offeror shall respond to paragraph (2) and if applicable, paragraph (3) of this provision for each participant in the joint venture.
(2) If the Offeror indicates "has" in paragraph (p)(1) of this provision, enter the following information:
Immediate owner CAGE code: _____.
Immediate owner legal name: _____.
(Do not use a "doing business as" name)
Is the immediate owner owned or controlled by another entity: □ Yes or □ No.
(3) If the Offeror indicates "yes" in paragraph (p)(2) of this provision, indicating that the immediate owner is owned or controlled by another entity, then enter the following information:
Highest-level owner CAGE code: _____.
Highest-level owner legal name: _____.
(*Do not use a "doing business as" name*)
(q) *Representation by Corporations Regarding Delinquent Tax Liability or a Felony Conviction under any Federal Law.*
(1) As required by sections 744 and 745 of Division E of the Consolidated and Further Continuing Appropriations Act, 2015 (Pub. L. 113-235), and similar provisions, if contained in subsequent appropriations acts, The Government will not enter into a contract with any corporation that–
(i) Has any unpaid Federal tax liability that has been assessed, for which all judicial and administrative remedies have been exhausted or have lapsed, and that is not being paid in a timely manner pursuant to an agreement with the authority responsible for collecting the tax liability, where the awarding agency is aware of the unpaid tax liability, unless an agency has considered suspension or debarment of the corporation and made a determination that suspension or debarment is not necessary to protect the interests of the Government; or
(ii) Was convicted of a felony criminal violation under any Federal law within the preceding 24 months, where the awarding agency is aware of the conviction, unless an agency has considered suspension or debarment of the corporation and made a determination that this action is not necessary to protect the interests of the Government.
(2) The Offeror represents that–

(i) It is □ is not □ a corporation that has any unpaid Federal tax liability that has been assessed, for which all judicial and administrative remedies have been exhausted or have lapsed, and that is not being paid in a timely manner pursuant to an agreement with the authority responsible for collecting the tax liability; and
(ii) It is □ is not □ a corporation that was convicted of a felony criminal violation under a Federal law within the preceding 24 months.
(r) *Predecessor of Offeror*. (Applies in all solicitations that include the provision at 52.204-16, Commercial and Government Entity Code Reporting.)
(1) The Offeror represents that it □ is or □ is not a successor to a predecessor that held a Federal contract or grant within the last three years.
(2) If the Offeror has indicated "is" in paragraph (r)(1) of this provision, enter the following information for all predecessors that held a Federal contract or grant within the last three years (if more than one predecessor, list in reverse chronological order):
Predecessor CAGE code: (or mark "Unknown").
Predecessor legal name:_____.
(*Do not use a "doing business as" name*).
(s) [Reserved].
(t) *Public Disclosure of Greenhouse Gas Emissions and Reduction Goals*. Applies in all solicitations that require offerors to register in SAM (12.301(d)(1)).
(1) This representation shall be completed if the Offeror received $7.5 million or more in contract awards in the prior Federal fiscal year. The representation is optional if the Offeror received less than $7.5 million in Federal contract awards in the prior Federal fiscal year.
(2) Representation. [Offeror to check applicable block(s) in paragraph (t)(2)(i) and (ii)].

(i) The Offeror (itself or through its immediate owner or highest-level owner) □ does, □ does not publicly disclose greenhouse gas emissions, i.e., makes available on a publicly accessible website the results of a greenhouse gas inventory, performed in accordance with an accounting standard with publicly available and consistently applied criteria, such as the Greenhouse Gas Protocol Corporate Standard.
(ii) The Offeror (itself or through its immediate owner or highest-level owner) □ does, □ does not publicly disclose a quantitative greenhouse gas emissions reduction goal, i.e., make available on a publicly accessible website a target to reduce absolute emissions or emissions intensity by a specific quantity or percentage.
(iii) A publicly accessible website includes the Offeror's own website or a recognized, third-party greenhouse gas emissions reporting program.
(3) If the Offeror checked "does" in paragraphs (t)(2)(i) or (t)(2)(ii) of this provision, respectively, the Offeror shall provide the publicly accessible website(s) where greenhouse gas emissions and/or reduction goals are reported:_____.
(u)
(1) In accordance with section 743 of Division E, Title VII, of the Consolidated and Further Continuing Appropriations Act, 2015 (Pub. L. 113-235) and its successor provisions in subsequent appropriations acts (and as extended in continuing resolutions), Government agencies are not permitted to use appropriated (or otherwise made available) funds for contracts with an entity that requires employees or subcontractors of such entity seeking to report waste, fraud, or abuse to sign internal confidentiality agreements or statements prohibiting or otherwise restricting such employees or subcontractors from lawfully reporting such waste, fraud, or abuse to a designated investigative or law enforcement representative of a Federal department or agency authorized to receive such information.
(2) The prohibition in paragraph (u)(1) of this provision does not contravene requirements applicable to Standard Form 312 (Classified Information Nondisclosure Agreement), Form 4414 (Sensitive Compartmented Information Nondisclosure Agreement), or any other form issued by a Federal department or agency governing the nondisclosure of classified information.
(3) *Representation*. By submission of its offer, the Offeror represents that it will not require its employees or subcontractors to sign or comply with internal confidentiality agreements or

statements prohibiting or otherwise restricting such employees or subcontractors from lawfully reporting waste, fraud, or abuse related to the performance of a Government contract to a designated investigative or law enforcement representative of a Federal department or agency authorized to receive such information (*e.g.*, agency Office of the Inspector General).
(v) *Covered Telecommunications Equipment or Services-Representation.* Section 889(a)(1)(A) and section 889 (a)(1)(B) of Public Law 115-232.
(1) The Offeror shall review the list of excluded parties in the System for Award Management (SAM) (https://www.sam.gov) for entities excluded from receiving federal awards for "covered telecommunications equipment or services".
(2) The Offeror represents that–
(i) It □ does, □ does not provide covered telecommunications equipment or services as a part of its offered products or services to the Government in the performance of any contract, subcontract, or other contractual instrument.
(ii) After conducting a reasonable inquiry for purposes of this representation, that it □ does, □ does not use covered telecommunications equipment or services, or any equipment, system, or service that uses covered telecommunications equipment or services.
(End of Provision)
Alternate I (Feb 2024). As prescribed in 12.301 (b)(2), add the following paragraph (c)(12) to the basic provision:
(12) (Complete if the offeror has represented itself as disadvantaged in paragraph (c)(5) of this provision.)
□ Black American.
□ Hispanic American.
□ Native American (American Indians, Eskimos, Aleuts, or Native Hawaiians).
□ Asian-Pacific American (persons with origins from Burma, Thailand, Malaysia, Indonesia, Singapore, Brunei, Japan, China, Taiwan, Laos, Cambodia (Kampuchea), Vietnam, Korea, The Philippines, Republic of Palau, Republic of the Marshall Islands, Federated States of Micronesia, the Commonwealth of the Northern Mariana Islands, Guam, Samoa, Macao, Hong Kong, Fiji, Tonga, Kiribati, Tuvalu, or Nauru).
□ Subcontinent Asian (Asian-Indian) American (persons with origins from India, Pakistan, Bangladesh, Sri Lanka, Bhutan, the Maldives Islands, or Nepal).
□ Individual/concern, other than one of the preceding.

52.229-11 TAX ON CERTAIN FOREIGN PROCUREMENTS – NOTICE AND REPRESENTATION (JUN 2020)

(a) *Definitions.* As used in this provision—

Foreign person means any person other than a United States person.

Specified Federal procurement payment means any payment made pursuant to a contract with a foreign contracting party that is for goods, manufactured or produced, or services provided in a foreign country that is not a party to an international procurement agreement with the United States. For purposes of the prior sentence, a foreign country does not include an outlying area.

United States person as defined in 26 U.S.C. 7701(a)(30) means—

(1) A citizen or resident of the United States;

(2) A domestic partnership;

(3) A domestic corporation;

(4) Any estate (other than a foreign estate, within the meaning of 26 U.S.C. 701(a)(31)); and

(5) Any trust if—

(i) A court within the United States is able to exercise primary supervision over the administration of the trust; and

(ii) One or more United States persons have the authority to control all substantial decisions of the trust.

(b) Unless exempted, there is a 2 percent tax of the amount of a specified Federal procurement payment on any foreign person receiving such payment. See 26 U.S.C. 5000C and its implementing regulations at 26 CFR 1.5000C-1 through 1.5000C-7.

(c) Exemptions from withholding under this provision are described at 26 CFR 1.5000C-1(d)(5) through (7). The Offeror would claim an exemption from the withholding by using the Department of the Treasury Internal Revenue Service Form W-14, Certificate of Foreign Contracting Party Receiving Federal Procurement Payments, available via the internet at ***www.irs.gov/w14*** . Any exemption claimed and self-certified on the IRS Form W-14 is subject to audit by the IRS. Any disputes regarding the imposition and collection of the 26 U.S.C. 5000C tax are adjudicated by the IRS as the 26 U.S.C. 5000C tax is a tax matter, not a contract issue. The IRS Form W-14 is provided to the acquiring agency rather than to the IRS.

(d) For purposes of withholding under 26 U.S.C. 5000C, the Offeror represents that—

(1) It [__]is [__]is not a foreign person; and

(2) If the Offeror indicates "is" in paragraph (d)(1) of this provision, then the Offeror represents that—I am claiming on the IRS Form W-14 [____] a full exemption, or [____] partial or no exemption [*Offeror shall select one*] from the excise tax.

(e) If the Offeror represents it is a foreign person in paragraph (d)(1) of this provision, then—

(1) The clause at FAR 52.229-12, Tax on Certain Foreign Procurements, will be included in any resulting contract; and

(2) The Offeror shall submit with its offer the IRS Form W-14. If the IRS Form W-14 is not submitted with the offer, exemptions will not be applied to any resulting contract and the Government will withhold a full 2 percent of each payment.

(f) If the Offeror selects "is" in paragraph (d)(1) and "partial or no exemption" in paragraph (d)(2) of this provision, the Offeror will be subject to withholding in accordance with the clause at FAR 52.229-12, Tax on Certain Foreign Procurements, in any resulting contract.

(g) A taxpayer may, for a fee, seek advice from the Internal Revenue Service (IRS) as to the proper tax treatment of a transaction. This is called a private letter ruling. Also, the IRS may publish a revenue ruling, which is an official interpretation by the IRS of the Internal Revenue

Code, related statutes, tax treaties, and regulations. A revenue ruling is the conclusion of the IRS on how the law is applied to a specific set of facts. **For questions relating to the interpretation of the IRS regulations go to *https://www.irs.gov/help/tax-law-questions* .**

(End of provision)

ADDENDUM TO SOLICITATION PROVISIONS
FAR AND DOSAR PROVISIONS NOT PRESCRIBED IN PART 12

THE FOLLOWING FEDERAL ACQUISITION REGULATION SOLICITATION PROVISIONS ARE INCORPORATED BY REFERENCE:

52.225-25 PROHIBITION ON CONTRACTING WITH ENTITIES ENGAGING IN CERTAIN ACTIVITIES OR TRANSACTIONS RELATING TO IRAN—REPRESENTATION AND CERTIFICATIONS (JUN 2020)

EXHIBIT A

PERFORMANCE WORK STATEMENT (PWS)

Domestic (Potable) Water Treatment System

I. GENERAL INFORMATION:

The United States New Embassy Compound in Guatemala City requires professional services and contractor cost proposals to perform preventive maintenance services of the facility's Potable Water Treatment System.

II. PROJECT REQUIREMENTS:

Potable Water Treatment System

DESCRIPTION OF EQUIPMENT:

- **Description: POTABLE WATER TREATMENT**
- **Volume: Domestic Water 113.55 liters or 30 gallons per minute.**

The potable water treatment is designed for:

1. Provide multi-barrier potable water system capable of providing the design volume and flow rate of water with minimum of operations and maintenance. Systems shall be able to automatically produce potable water with one unit of each process out of service. System shall include the following:

    1. Pretreatment.
    2. Potable water treatment.
    3. Process pressure FRP tanks.
    4. Controls.
    5. System accessories
    6. Testing and monitoring equipment.

2. Water treatment shall conform to requirements in **Chapter 6 of the OBO Plumbing Code**.

3. Water treatment systems should be tailored to specific source water quality. However, in
    1. No case shall source water be conveyed directly to Department of State facilities served by system without written approval from Project Director/COR based on input from OBO/PDCS/DE mechanical engineer.
    2. Systems shall be passive and self-correcting, with chemical feed systems minimized to the extent practicable.

4. Provide automatic treatment capable of complying with National Primary and Secondary Drinking Water Regulations 40 CFR Parts 141 – 143, and Safe Drinking Water Act (PL 93-523, PL 104-182, and other applicable public laws).

MANUFACTURER'S TABLE OF CONTENTS (Technical information contained in M&O Manual).

1.
2. NPE/NPE-F Installation, Operation and Maintenance Instructions
3. Micron W & WD Series Filters Installation and Operation Manual
4. Peristaltic Metering Pump - SVP Series Installation and Maintenance Manual
5. Peristaltic Metering Pump - Classic Series Installation and Maintenance Manual
6. Pentair Fleck 2850 Control Valve Service Manual
7. Analyzer System Operating Instructions
8. Turbidimeter Operating Instructions
9. Rotor X Flow Sensors Operating Instructions
10. Submersible Level Transmitters User Manual
11. Electric Actuator Installation, Operation and Maintenance Instructions.
    1 Skid 1 – Raw water filtration and chlorination per technical proposal.
12. 1 Skid 2 - Carbon filter skid per technical proposal.
13. 1 Skid 3 - Final filtration and chlorination per technical proposal.
14. 6 ProSense hydrostatic submersible level transmitter, 0 to 10 psig (23.1ft of water column) sensing range, 4-20 mA, stainless steel body and non-fouling stainless steel protective cage, 1/2in male NPT with shielded and vented 40ft cable. Part Number: SLT2-010-L40.
15. 6 ProSense indicating desiccant vent filter, for ProSense submersible hydrostatic level transmitters. Part Number: SLT-VF1.
16. 4 ProSense junction box, for use with ProSense submersible hydrostatic level transmitters. Part Number: SLT-JB1.

DESCRIPTION OF EQUIPMENT *:

REAL PROPERTY CODE	EQUIPMENT / PRODUCT ID	SKID #	LOCATION	EQUIPMENT / SUB ASSET TYPE	CRITICALITY	MANUFACTURER	MANUFACTURER'S ADDRESS	MODEL	SERIAL NUMBER	CAPACITY
PE-GUATEMALA CITY-018	RAW WATER CHLORINE ANALYZER SYSTEM	1	SPX LEVEL 1 U108			GF	6200 VIPOND DR, MISSISSAUGA, ON L5T 2B2, CANADA	SIGNET4630		0-5 PPM
PE-GUATEMALA CITY-018	RAW WATER CHEMICAL PUMP	1	SPX LEVEL 1 U108			STENNER	3174 DESALVO RD, JACKSONVILLE, FL 32246, U.S.A.	SVP4H1		0.3-5 GPD
PE-GUATEMALA CITY-018	BAG FILTER A	1	SPX LEVEL 1 U108			SHELCO	100 BRADLEY ST. MIDDLETOWN, CT 06457 USA.	BFS-1C-2	236808	50 MICRON
PE-GUATEMALA CITY-018	BAG FILTER B	1	SPX LEVEL 1 U108			SHELCO	100 BRADLEY ST. MIDDLETOWN, CT 06457 USA.	BFS-1C-2	236808	50 MICRON
PE-GUATEMALA CITY-018	CITY WATER FILL VALVE MOTORIZED ACTUATOR A	1	SPX LEVEL 1 U108			ASAHI AMERICA	655 ANDOVER ST, LAWRENCE, MA 01843, U.S.A.	SERIES 94		120 VAC
PE-GUATEMALA CITY-018	CITY WATER FILL VALVE MOTORIZED ACTUATOR B	1	SPX LEVEL 1 U108			ASAHI AMERICA	655 ANDOVER ST, LAWRENCE, MA 01843, U.S.A.	SERIES 94		120 VAC
PE-GUATEMALA CITY-018	RECIRC 1	1	SPX LEVEL 1 U108			GOULDS	2881 EAST BAYARD STREET. SENECA FALLS, NY 13148	NPE.1.5X2X6-2P-PM	B2000606	5 HP
PE-GUATEMALA CITY-018	RECIRC 2	1	SPX LEVEL 1 U108			GOULDS	2881 EAST BAYARD STREET. SENECA FALLS, NY 13148	NPE.1.5X2X6-2P-PM	B2000605	5 HP
PE-GUATEMALA CITY-018	TRANSFER 1	1	SPX LEVEL 1 U108			GOULDS	2881 EAST BAYARD STREET. SENECA FALLS, NY 13148	NPE-1X1 ¼-6	J1G01740	3 HP
PE-GUATEMALA CITY-018	TRANSFER 2	1	SPX LEVEL 1 U108			GOULDS	2881 EAST BAYARD STREET. SENECA FALLS, NY 13148	NPE-1X1 ¼-6	L1G08257	3 HP
PE-GUATEMALA CITY-018	TURBIDITY METER	1	SPX LEVEL 1 U108			ROSEMOUNT	8200 MARKET BLVD CHANHASSEN, MN 55317 UNITED STATES	CLARITY II		0-5 NTU
PE-GUATEMALA CITY-018	CARBON FILTER A	2	SPX LEVEL 1 U108			LAKESIDE	7869 N 73RD ST, MILWAUKEE, WI 53223, U.S.A.	A8008-12	23024	30 GPM
PE-GUATEMALA CITY-018	CARBON FILTER B	2	SPX LEVEL 1 U108			LAKESIDE	7869 N 73RD ST, MILWAUKEE, WI 53223, U.S.A.	A8008-12	23023	30 GPM
PE-GUATEMALA CITY-018	RECIRC 1	3	SPX LEVEL 1 U108			GOULDS	2881 EAST BAYARD STREET. SENECA FALLS, NY 13148	1ST1EGD4 (NPE)	M1905215	1 HP
PE-GUATEMALA CITY-018	RECIRC 2	3	SPX LEVEL 1 U108			GOULDS	2881 EAST BAYARD STREET. SENECA FALLS, NY 13148	1ST1EGD4 (NPE)	M1808898	1 HP
PE-GUATEMALA CITY-018	POTABLE WATER CHLORINE ANALYZER SYSTEM	3	SPX LEVEL 1 U108			GF	6200 VIPOND DR, MISSISSAUGA, ON L5T 2B2, CANADA	SIGNET4630		0-5 PPM
PE-GUATEMALA CITY-018	POTABLE WATER PH & CHLORINE SENSORS	3	SPX LEVEL 1 U108			GF	6200 VIPOND DR, MISSISSAUGA, ON L5T 2B2, CANADA	SIGNET515/2536		
PE-GUATEMALA CITY-018	CARTRIDGE FILTER A	3	SPX LEVEL 1 U108			SHELCO	100 BRADLEY ST. MIDDLETOWN, CT 06457 USA.	4FOS2-1.5MNPT-ML	236808	20 µ
PE-GUATEMALA CITY-018	CARTRIDGE FILTER B	3	SPX LEVEL 1 U108			SHELCO	100 BRADLEY ST. MIDDLETOWN, CT 06457 USA.	4FOS2-1.5MNPT-ML	236808	5 µ
PE-GUATEMALA CITY-018	CARTRIDGE FILTER C	3	SPX LEVEL 1 U108			SHELCO	100 BRADLEY ST. MIDDLETOWN, CT 06457 USA.	4FOS2-1.5MNPT-ML	236808	1 µ
PE-GUATEMALA CITY-018	CALCITE FILTER	3	SPX LEVEL 1 U108			CLACK CORPORATION	4462 DURAFORM LANE, WINDSOR, WISCONSIN, USA.	A8021-01		
PE-GUATEMALA CITY-018	TURBIDITY METER	3	SPX LEVEL 1 U108			ROSEMOUNT	8200 MARKET BLVD CHANHASSEN, MN 55317 UNITED STATES	CLARITY II		0-5 NTU

PE-GUATEMALA CITY-018	POTABLE WATER CHEMICAL PUMP NAOH	3	SPX LEVEL 1 U108			STENNER	3174 DESALVO RD, JACKSONVILLE, FL 32246, U.S.A.	SVP4H1		0.3-5 GPD
PE-GUATEMALA CITY-018	POTABLE WATER CHEMICAL PUMP CHLORINE	3	SPX LEVEL 1 U108			STENNER	3174 DESALVO RD, JACKSONVILLE, FL 32246, U.S.A.	SVP4H1		0.3-5 GPD
PE-GUATEMALA CITY-018	POTABLE WATER CHEMICAL PUMP CORROTION INHIBITOR	3	SPX LEVEL 1 U108			STENNER	3174 DESALVO RD, JACKSONVILLE, FL 32246, U.S.A.	45MHP10		0.5-10 GPD
PE-GUATEMALA CITY-018	CITY WATER FILL VALVE MOTORIZED ACTUATOR A	3	SPX LEVEL 1 U108			ASAHI AMERICA	655 ANDOVER ST, LAWRENCE, MA 01843, U.S.A.	SERIES 94		120 VAC
PE-GUATEMALA CITY-018	TANK 1	4	SPX LEVEL 1 U108			PENTAIR	13845 BISHOPS DR. SUITE 200. BROOKFIELD, WI 53005, USA.	FXA-700	326445	450.5 L
PE-GUATEMALA CITY-018	TANK 2	4	SPX LEVEL 1 U108			PENTAIR	13845 BISHOPS DR. SUITE 200. BROOKFIELD, WI 53005, USA.	FXA-700	326444	450.5 L
PE-GUATEMALA CITY-018	PRESSURE VESSELS	4	SPX LEVEL 1 U108			PENTAIR	13845 BISHOPS DR. SUITE 200. BROOKFIELD, WI 53005, USA.	24X72		119 GAL
PE-GUATEMALA CITY-018	TRANSFER 1	5	SPX LEVEL 1 U108			GRUNDFOS	902 KOOMEY RD, BROOKSHIRE, TX 77423, USA.	CR 5-5 K-FGJ-A-E-HQQE		
PE-GUATEMALA CITY-018	PUMP DRIVE	5	SPX LEVEL 1 U108			ABB, INC	5711 R S BOREHAM JR ST, FORT SMITH, AR 72901, USA	ACH550		
PE-GUATEMALA CITY-018	CALCITE	6	SPX LEVEL 1 U108			CLACK CORPORATION	4462 DURAFORM LANE, WINDSOR, WISCONSIN, USA.	A8021-01		
PE-GUATEMALA CITY-018	ANTHRACITE	6	SPX LEVEL 1 U108			CLACK CORPORATION	4462 DURAFORM LANE, WINDSOR, WISCONSIN, USA.	A8029		
PE-GUATEMALA CITY-018	DEEP BED SAND FILTERS	6	SPX LEVEL 1 U108			WATERCO	PHOENIX, ARIZONA, USA.	W700		240 L
PE-GUATEMALA CITY-018	WATER FILTRATION MEDIA	6	SPX LEVEL 1 U108			RED FLINT SAND & GRAVEL, LLC.	615 SHORT ST, EAU CLAIRE, WI 54701,			

SKID 1. RAW WATER AND CHLORINATION.

1. RECIRC PUMPS 5 HP
2. TRANSFER PUMPS 3 HP
3. CHLORINE PUMP
4. 50 MICRON BAG FILTERS
5. CITY WATER INLET 2"
6. WELL WATER INLET 2"
7. OUTLET TO RAW WATER STORAGE TANKS 3"
8. INLET FROM RAW WATER STORAGE TANKS 4"
9. OUTLET TO FINAL FILTRATION SKID 1-1/2"
10. CHLORINE CHEMICAL TANK 35 GAL
11. CHLORINE ANALYZER
12. CONTROL PANEL

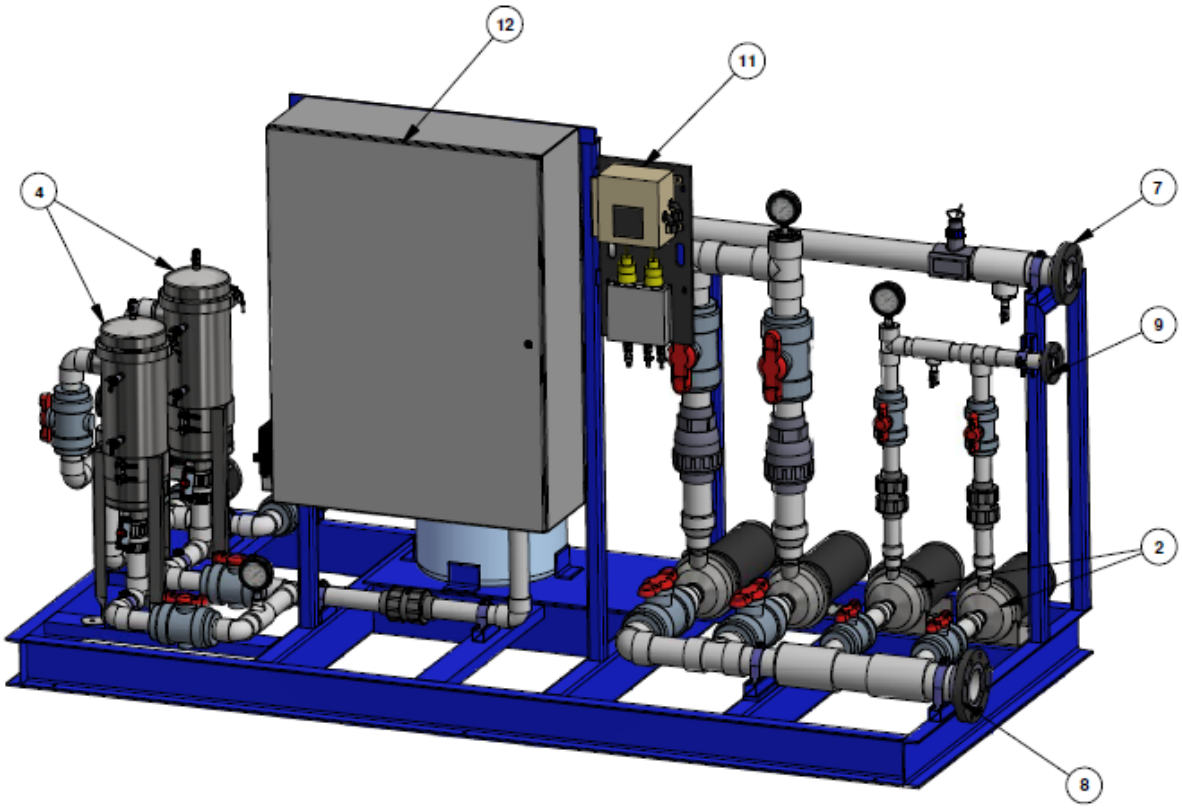

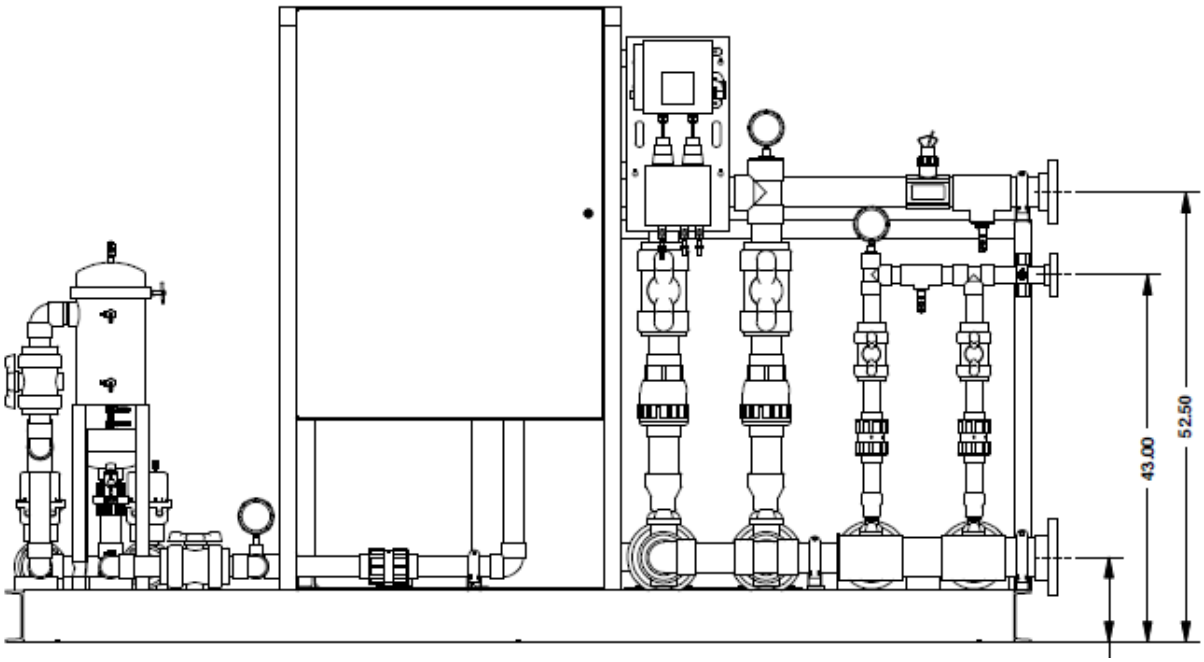

Single Bag Housings: #1, #2, #3 and #4 sizes

- Maximum Operating Pressure: 150 psig (10.3 bar) @ 300°F (149°C).
- Connections

- Inlet /Outlet: 2" FNPT (#1 and #2 Sizes) 3/4", 1" and 1 1/2" FNPT (#3 and #4 Sizes)
- Drain Port: 1/2" FNPT (#1 and #2 Sizes)
- Gauge Ports: 1/4" FNPT - clean and dirty sides (#1 and #2 sizes)
- Vent Port: 1/4" NPT Plug.

MODEL AND BAG SIZE	CLOSURE	MAX FLOW RATE* GPM (LPM)	DRAIN SIZE	DIMENSIONS					
				A	B	C	D	E	F
BFS-1 / BFC-1	Clamp or Swing Bolt	70 (265)	1/2"	18 7/8" (47.9 cm)	20 1/2" (52.1 cm)	21 3/4" (55.2 cm)	3" (7.6 cm)	6 11/16" (17.0 cm)	3" (7.6 cm)
BFS-2 / BFC-2	Clamp or Swing Bolt	150 (567)	1/2"	34 7/8" (88.6 cm)	22 3/4" (92.7 cm)	21 3/4" (55.2 cm)	3" (7.6 cm)	6 11/16" (17.0 cm)	3" (7.6 cm)
BFS-3	Clamp	25 (95)		16 9/16" (42.1 cm)	10 3/8" (26.4 cm)				
BFS-4	Clamp	40 (151)		22 7/8" (58.1 cm)	16 11/16" (42.4 cm)				

*Flow rates are guidelines only. Actual flow rates are based upon fluid, viscosity, bag type, micron ratings and other factors

Dimensions

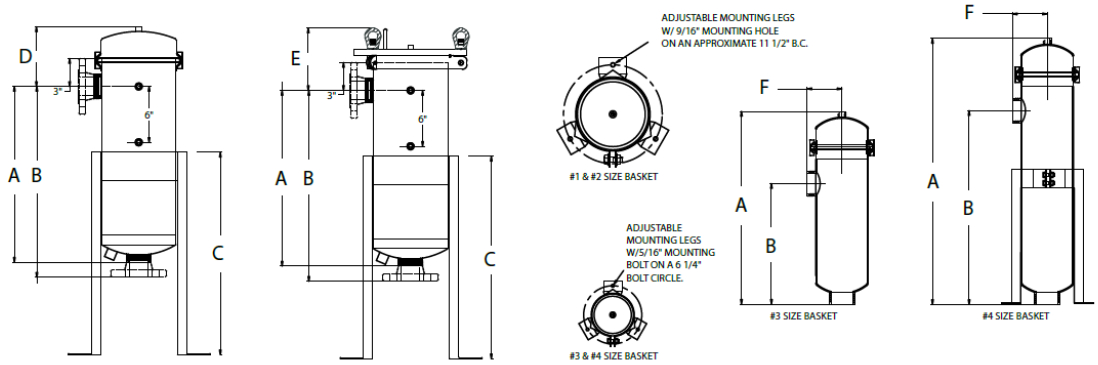

BFS	- 2	SB	- 2	- 316	-	B
MODEL	BAG SIZE	CLOSURE	PIPE SIZE	MATERIAL	CONNECTION ORIENTATION	GASKET
#1 and #2 Sizes						
BFS = Stainless Steel BFC = Carbon Steel	1 2	C = Clamp SB = Swing Bolt	2 = 2" FNPT (standard) 2F = 2" RF Flange 3 = 3" FNPT 3F = 3" RF Flange 2TC = 2" Sanitary Ferrules	304 = 304 SS 316 = 316 SS 134 = 134 Coating over 304 SS*	Blank = Side In / Bottom Out Z = Side In / Side Out	B = Buna N (Standard) E = EPR S = Silicone V = Viton

MicroSentry™HTF FILTER BAGS

- Fitering level: 50 micron.
- Media and ring: Polypropylene.

SKID # 2: TWIN ACTIVADED CARBON FILTERS.

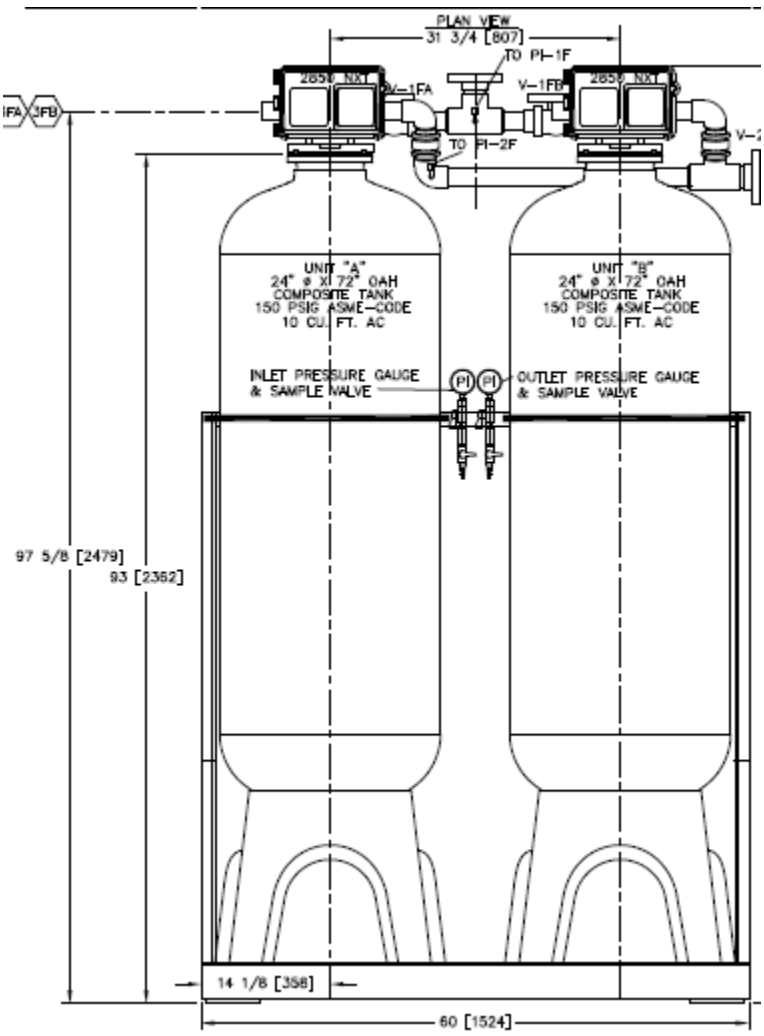

SKID # 3: FINAL FILTRATION AND CHLORINATION.

1. RECIRC PUMPS 1 HP
2. NaOH PUMP
3. CHLORINE PUMP
4. CORROSION INHIBITOR PUMP
5. NaOH TANK
6. CHLORINE TANK
7. CORROSION INHIBITOR TANK
8. 20 MICRON CARTRIDGE FILTERS
9. 5 MICRON CARTRIDGE FILTERS
10. 1 MICRON CARTRIDGE FILTERS
11. CALCITE FILTER
12. INLET 1-1/2"
13. BACKWASH/DRAIN 1-1/2"
14. OUTLET TO POTABLE WATER STORAGE TANKS 1-1/2"
15. INLET FROM POTABLE WATER STORAGE TANKS 1-1/2"

16. TURBIDITY ANALYZER
17. CHLORINE ANALYZER
18. CONTROL PANEL

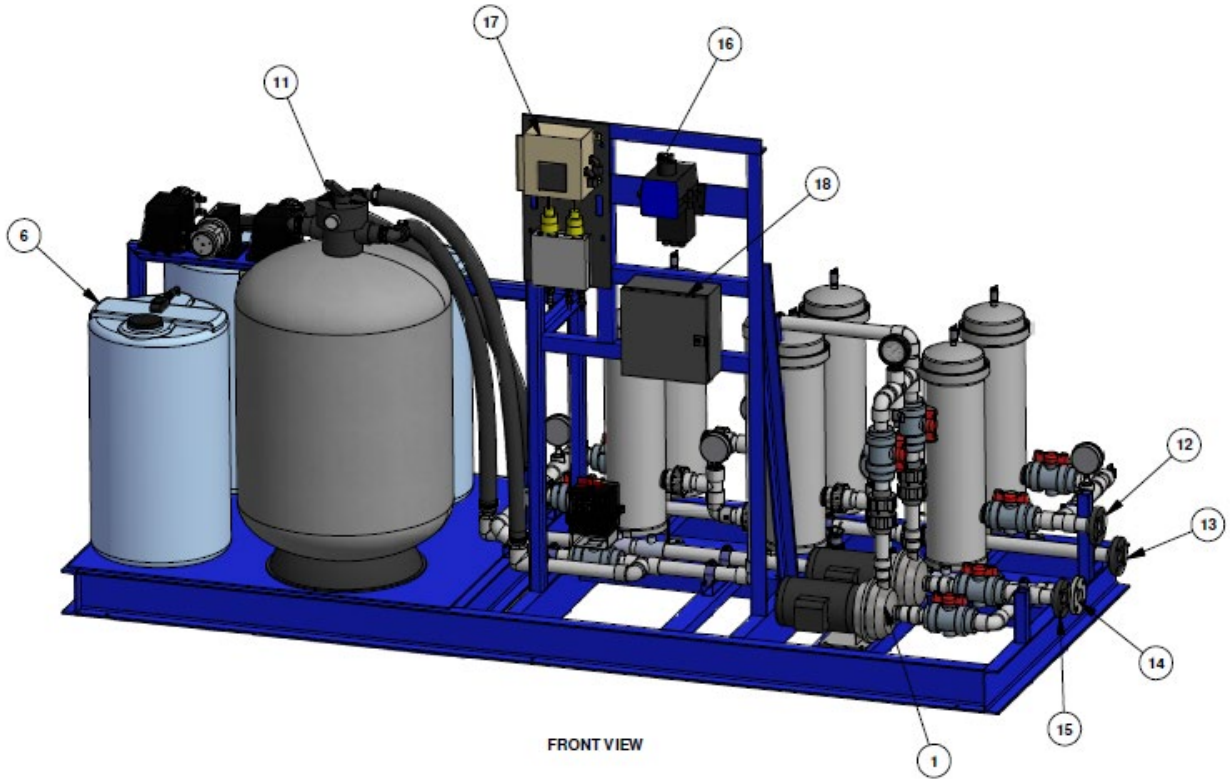

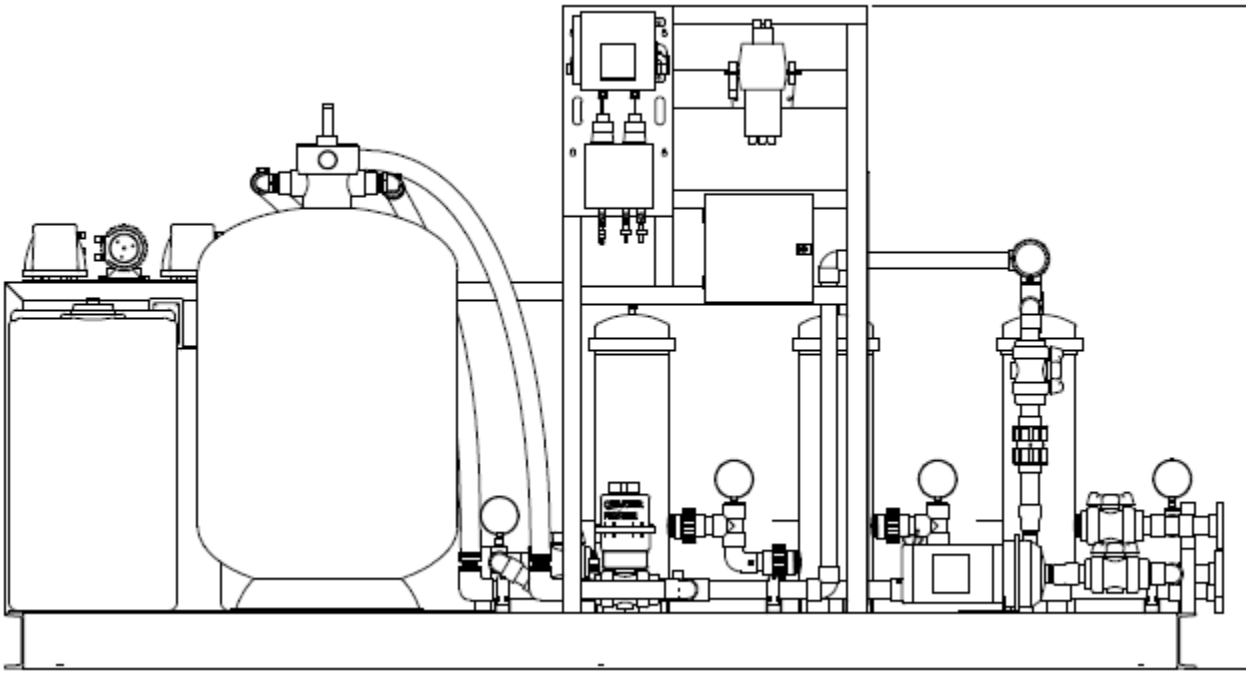

4FOS and 5FOS Multi-Cartridge Housings

- Design pressure: 150psi (10bar) @ 300ºF (149ºC).
- Standard inlet and outlet connections are 2”.

Standard Design Specifications

Model	Qty. (Length) of Cartridges†	Flow Rate GPM*	Pipe Size	Drains	Vent	Max Ctg Diameter	Shipping Wgt. Clamp	Box Size Clamp	Shipping Wgt. Swing Bolt	Box Size Swing Bolt
4FOS1	4 (10”)	28	2” MNPT	1/2”NPT	1/4”NPT	2 3/4” OD	25 lbs	12x12x23	62 lbs	18x18x27
4FOS2	4 (20”)	56	2” MNPT	1/2”NPT	1/4”NPT	2 3/4” OD	31 lbs	12x12x33	68 lbs	18x18x37

4	FOS	2 -	SB -	316 -	222 -	2TC -	EP -	ML -	E
No. of Columns	Product Code	No. of Stacks	Closure Style	Material	Cartridge Configuration	Connection Type	Finish	Options	Gasket
4 5	FOS	1 = 1 High 2 = 2 High 3 = 3 High 4 = 4 High	Blank= V-Band Clamp SB = Swing Bolt	Blank = 304L 316 = 316L	Blank = Double Open Ended 222 = 222 Style Cartridge Fin or Flat 226 = 226 Style Cartridge Fin or Flat	Blank = 2” MNPT 1.5MNPT = 1 1/2” MNPT BSP = 2” BSP-NIPPLE 1F = 1” Flange 1.5F = 1 1/2” Flange 2F = 2” Flange 1TC = 1” Ferrules	Blank = Standard Poly Coat EP = Electro-Polished GB = Glass Bead P = Passivate	Blank = None ML = Legs TABS = Tabs OL = Heavy Duty Legs GP = Gauge Ports GPA = Gauge Ports	Blank = Buna E = EPR S = Silicone V = Viton TS = Teflon Encasulated Silicone

Poly-Pleat™ Series Filter Cartridges

- Filter media: Polyester-Plus TM
- End caps: Plastisol (pliable PVC)
- Surface area: Approx. 6 sq. ft. (0.56 M2) per 9-3/4” length
- Temperature*: Up to 140°F (60°C) for standard cartridges, Up to 200°F (93°C) for high-temp cartridges
- pH: 3 to 11 (see compatibility charts)**
- Flow rate: 3-6 GPM (11-22 LPM; One M3/hr.) per 9-3/4” length
- Dimensions: 2-3/4” (70 mm) OD; 1-1/16” (27 mm) ID
- Shrink wrap: Available in single length 9-3/4” cartridges

Harmsco 19-1/2” (495 mm) cartridges. (For Harmsco filter housings requiring “double” length cartridges.)

0.35	921-0.35	Brown	24	19	9	12x17x21
1	921-1	Tan	24	19	9	12x17x21
5	921-5	White	24	19	9	12x17x21
10	921-10	Red	24	19	9	12x17x21
20	921-20	Blue	24	19	9	12x17x21
50	921-50	Yellow	24	19	9	12x17x21

ANSI-NSF 61

2-1/2”, 2-3/4”, 4-1/2” and 7-3/4” O.D. - Harmsco® HIF filter housings use 9-3/4”, 19-1/2” and 29-1/4” lengths only

Cartridge O.D.	Product Code	Pleated Media Area (sq ft)	Type	Length (in.)	O.D. (in.)	Recommended Flow Rate (GPM) for 2 log removal	No./Carton
	Poly-Pleat™ - 1 micron absolute, multi-layered media						
2-1/2”	PP-701-1/10	3	Standard	10	2-1/2	1.5	28
	PP-701-1/20	7	Standard	20	2-1/2	3.5	28
	PP-701-1/30	11	Standard	30	2-1/2	5.5	28
	PP-701-1/40	15	Standard	40	2-1/2	7.5	28
2-3/4”	PP-S-1	3.7	Standard	9-3/4	2-3/4	1.85	24
	PP-D-1	7.5	Standard	19-1/2	2-3/4	3.75	24
	PP-T-1	11	Standard	29-1/4	2-3/4	5.5	24

III. GENERAL REQUIREMENTS:

The Contractor under this SOW will be responsible for labor, tools, and materials required to carry out all preventive maintenance as outlined in this SOW. Embassy staff should have service manuals for all equipment included in this SOW. If they do not, the Contractor will assist Embassy Staff in obtaining the manuals and ensure they have been received.

IV. SCOPE OF WORK - PREVENTIVE MAINTENANCE

Contractor shall provide all materials, supervision, labor, tools and equipment to perform preventive maintenance. All personnel working in the vicinity should wear and /or use safety protection while all work is done. Any questions or injuries **shall** be brought to the attention of the Post Occupation Safety and Health Officer (POSHO). Material Safety Data Sheets (MSDS) shall be provided by the Contractor for all HAZMAT materials. Copies will be provided to the COR for approval.

The Service program shall consist of the embassy facility management staff conducting routine (daily/weekly) operator testing of the potable water treatment systems and monthly e-mailing the results to the service contractor, with copy to OBO/FAC (water_testing_group@state.gov). The Contractor will then be responsible for conducting a technical analysis of the routine potable water treatment testing results from the embassy. The Contractor will then respond to the embassy within 24 hours to direct the embassy facility management staff to make changes to the treatment plant operations to re-establish effective and efficient potable water treatment to meet water quality standards.

At a minimum, the following work must be done according to the O&M Manual and OBO Recommendations:

1. PR15AN - PUMP RECIRCULATING MAINTENANCE ANNUAL
2. PR15SA - PUMP RECIRCULATING MAINTENANCE SEMI-ANNUAL
3. CP45AN - CHLORINE ANALYZER (CL500) MAINTENANCE ANNUAL
4. CP45MO - CHLORINE ANALYZER (CL500) MAINTENANCE MONTHLY
5. CP45QU - CHLORINE ANALYZER (CL500) MAINTENANCE QUARTERLY
6. GACF35AN - WATER TREATMENT SYSTEM CARBON FILTER SKID MAINTENANCE ANNUAL
7. GACF35SA - WATER TREATMENT SYSTEM CARBON FILTER SKID MAINTENANCE SEMIANNUAL
8. GACF35WK - WATER TREATMENT SYSTEM CARBON FILTER SKID MAINTENANCE WEEKLY
9. WSF05AN - WATER TREATMENT SAND FILTER SKID MAINTENANCE ANNUAL
10. WSF05SA - WATER TREATMENT SAND FILTER SKID MAINTENANCE SEMIANNUAL
11. WSF05WK - WATER TREATMENT SAND FILTER SKID MAINTENANCE WEEKLY
12. SP07AN - SUMP PUMP MAINTENANCE ANNUAL
13. WT083Y - TANK WATER WITH CONTROLS MAINTENANCE EVERY THREE YEARS
14. WT08AN - TANK WATER WITH CONTROLS MAINTENANCE ANNUAL
15. WT14QU - TANK, WATER STORAGE (300 GAL OR LESS, LITE USE) MAINTENANCE QUARTERLY.

Preventive Maintenance Checklist: PCEN04AN

- ***Code: PCEN04AN***
- ***Frequency: Annual***
- ***Description: PUMP CENTRIFUGAL Annual***
- ***Asset Type: PUMP, CENTRIFUGAL***

Task Summary

1. Inspect the centrifugal pump.
2. Clean and lubricate the centrifugal pump and motor.
3. Perform a vibration analysis.
4. Perform an operational test.

(T)ools, (S)afety Equipment, and (M)aterials Required

1. Pressure measurement device, if gauges are not installed.
2. Mechanic's tool set.
3. Pump and motor lubricants.
4. Lubricant grease gun.
5. Cleaning materials.
6. Paint and brushes.
7. Clamp on ammeter.
8. Alignment tools/shims.
9. Vibration analysis tester.

Safety Procedures

1. Schedule work with operating personnel.
2. Follow site safety rules for lockout and tagout.
3. Review and follow the manufacturer's instructions.
4. Record equipment damage or deficiencies.
5. Record results in the equipment history log.

Procedures

1. Shutdown, and tag out the unit.
2. Clean and check the centrifugal pump.
    A. Clean builtup dirt and grime from pump casing, shaft coupling, and motor.
    B. Check motor ventilation ports for soil buildup, clean if necessary.
    C. Clean outer motor surfaces of built-up dirt.
    D. Check motor hold down bolts and grounding straps for tightness.
    E. Inspect all electrical wiring, motor, and controls for signs of overheating, or damaged or worn insulation, lose or corroded connections, or damaged conduit.
    F. Check motor and pump alignment.
    G. Check drive shaft coupling for evidence of damage.
    H. Check that base bolts are securely fastened.
3. Drain pump housing, check suction, discharge, and check valve for holding.
4. Remove rust and repaint.
5. On pumps with oil ring lubricated bearings, drain oil, flush, and fill to proper oil level with new approved type oil.
6. Clean pump suction strainers, and pump packing water seal filter/strainer.
7. Cycle isolation valves two times. Do not cycle triple duty valves or balancing valves.
8. Remove tags and start the pump.
    A. Adjust the packing if necessary.
    B. Grease the centrifugal pump.

C. Grease the motor bearings.
D. Perform a vibration analysis and make corrections if necessary.

10. Perform an operational test of the centrifugal pump.
    A. Check the flanges and fittings for leaks.
    B. Check for excessive leakage at the shaft seal.
    C. Measure the motor phase voltages and current and record the results. Compare the results against motor nameplate data.
    D. Record the inlet and outlet pressures.
11. Return the unit to service.

Preventive Maintenance Checklist: PCEN04SA

- ***Code: PCEN04SA***
- ***Frequency: SemiAnnual***
- ***Description: PUMP CENTRIFUGAL***
- ***Asset Type: PUMP, CENTRIFUGAL***

Task Summary

1. Inspect the centrifugal pump.

(T)ools, (S)afety Equipment, and (M)aterials Required

1. Pressure measurement device, if gauges are not installed.

Safety Procedures

1. Perform proper lockout/tagout steps.
2. Schedule outage with operating staff.
3. Follow site safety rules and your supervisor's instructions.
4. Record and report equipment damage or problems.
5. Note and list all test results in the pump maintenance log.
6. Obtain and review manufacturer's operation and maintenance instructions.

Procedures

1. Check the pump for excessive vibration, leakage or other abnormal operation.
2. Record the inlet and outlet pressures.
3. Note any pending problems which should be fixed before the annual maintenance check.

Preventive Maintenance Checklist: PCEN16AN

- ***Code: PCEN16AN***
- ***Frequency: Annual***
- ***Description: PUMP VERTICAL TURBINE Annual***
- ***Asset Type : PUMP, CENTRIFUGAL***

Task Summary

1. Inspect the pump assembly.
2. Clean and lubricate the pump and motor.
3. Perform a vibration analysis.
4. Perform an operational test.

(T)ools, (S)afety Equipment, and (M)aterials Required

1. Pressure measurement device, if gauges are not installed.
2. Mechanic's tool set.
3. Pump and motor lubricants.
4. Lubricant grease gun.

5. Cleaning materials.
6. Paint and brushes.
7. Clamp on ammeter.
8. Vibration analysis tester.

Safety Procedures

1. Schedule work with operating personnel.
2. Follow site safety rules for lockout and tagout.
3. Review and follow the manufacturer's instructions.
4. Record equipment damage or deficiencies.
5. Record results in the equipment history log.

Procedures

1. Shutdown, and tag out the unit.
2. Clean and check the pump assembly.
    A. Clean built-up
2. dirt and grime from pump casing and motor.
    B. Check motor ventilation ports for soil buildup, clean if necessary.
    C. Clean outer motor surfaces of built-up dirt.
5. Check motor hold down bolts and grounding straps for tightness.
6. Inspect all electrical wiring, motor, and controls for signs of overheating, or damaged or worn insulation, lose or corroded connections, or damaged conduit.
7. Check that base bolts are securely fastened.
4. Drain pump housing, check suction, discharge and check valve for holding.
5. Remove rust and repaint.
6. Clean pump suction strainers, and pump packing water seal filter/strainer.
7. Cycle isolation valves two times. Do not cycle triple duty valves or balancing valves.
8. Remove tags and start the pump.
    A. Adjust the packing if necessary.
    B. Grease the pump if applicable.
    C. Grease the motor bearings.
    D. Perform a vibration analysis and make corrections if necessary.
9. Perform an operational test of the pump assembly.
    A. Check the flanges and fittings for leaks.
    B. Check for excessive leakage at the shaft seal.
    C. Measure the motor phase voltages and current and record the results. Compare the results against motor nameplate data.
    D. Record the inlet and outlet pressures.
10. Return the unit to service.

Preventive Maintenance Checklist: PCEN16SA

- ***Code: PCEN16SA***
- ***Frequency: SemiAnnual***
- ***Description: PUMP VERTICAL TURBINE SemiAnnual***
- ***Asset Type : PUMP, CENTRIFUGAL***

Task Summary

1. Clean, inspect, and perform an operational test of pump assembly.

(T)ools, (S)afety Equipment, and (M)aterials Required

1. Pressure measurement device, if gauges are not installed.
2. Mechanic's tool set.

3. Cleaning materials.

Safety Procedures

1. Schedule work with operating personnel.
2. Follow site safety rules for lockout and tagout.
3. Review and follow the manufacturer's instructions.
4. Record equipment damage or deficiencies.
5. Record results in the equipment history log.

Procedures

1. Clean and inspect the pump assembly:
    A. Remove accumulated dirt and sludge from pump casing.
    B. Clean motor and motor ventilation ports.
    C. Inspect all electrical wiring, motor, and controls for signs of overheating, or damaged or worn insulation, lose or corroded connections, or damaged conduit.
2. Check that base bolts are securely fastened.
3. Drain pump housing, check suction, discharge, and check valve for holding.
4. Remove rust and repaint.
5. Clean pump suction strainers, and pump packing water seal filter/strainer.
6. Cycle isolation valves two times. Do not cycle triple duty valves or balancing valves.
7. Remove tags and start the pump.
    A. Check for excessive vibration.
    B. Check action of check valve.
    C. Adjust the packing if necessary.
8. Perform an operational test of the pump assembly.
    A. Check the flanges and fittings for leaks.
    B. Check for excessive leakage at the shaft seal.
    C. Record the inlet and outlet pressures.
9. Return the unit to service.

Preventive Maintenance Checklist: PR15AN

- ***Code: PR15AN***
- ***Frequency: Annual***
- ***Description: PUMP RECIRCULATING Annual***
- ***Asset Type : PUMP, RECIRCULATING***

Task Summary

1. Inspect the pump assembly.
2. Clean and lubricate the pump and motor.
3. Perform a vibration analysis.
4. Perform an operational test.

(T)ools, (S)afety Equipment, and (M)aterials Required

1. Pressure measurement device, if gauges are not installed.
2. Mechanic's tool set.
3. Pump and motor lubricants.
4. Lubricant grease gun.
5. Cleaning materials.
6. Paint and brushes.
7. Clamp on ammeter.
9. Vibration analysis tester.

Safety Procedures

1. Schedule work with operating personnel.
2. Follow site safety rules for lockout and tagout.
3. Review and follow the manufacturer's instructions.
4. Record equipment damage or deficiencies.
5. Record results in the equipment history log.

Procedures

1. Shutdown, and tag out the unit.
2. Clean and check the pump assembly.
    A. Clean builtup dirt and grime from pump casing and motor.
    B. Check motor ventilation ports for soil buildup, clean if necessary.
    C. Clean outer motor surfaces of builtup dirt.
    D. Check motor hold down bolts and grounding straps for tightness.
    E. Inspect all electrical wiring, motor, and controls for signs of overheating, or damaged or worn insulation, loose or corroded connections, or damaged conduits.
    F. Check that base bolts are securely fastened.
3. Drain pump housing, check suction, discharge and check valve for holding.
4. Remove rust and repaint.
5. Clean pump suction strainers, and pump packing water seal filter/strainer.
6. Cycle isolation valves two times. Do not cycle triple duty valves or balancing valves.
7. Remove tags and start the pump.
    A. Adjust the packing if necessary.
    B. Grease the pump if necessary.
    C. Grease the motor bearings.
    D. Perform a vibration analysis and make corrections if necessary.
8. Perform an operational test of the pump assembly.
    A. Check the flanges and fittings for leaks.
    B. Measure the motor phase voltages and current and record the results. Compare the results against motor
1. nameplate data.
    C. Record the inlet and outlet pressures.
9. Return the unit to service.

Preventive Maintenance Checklist: PR15SA

- ***Code: PR15SA***
- ***Frequency: SemiAnnual***
- ***Description: PUMP RECIRCULATING SemiAnnual***
- ***Asset Type: PUMP, RECIRCULATING***

Task Summary

1. Clean, inspect, and perform an operational test of pump assembly.

(T)ools, (S)afety Equipment, and (M)aterials Required

1. Pressure measurement device, if gauges are not installed.
2. Mechanic's tool set.
3. Cleaning materials.

Safety Procedures

1. Schedule work with operating personnel.
2. Follow site safety rules for lockout and tagout.
3. Review and follow the manufacturer's instructions.
4. Record equipment damage or deficiencies.

5. Record results in the equipment history log.

Procedures

1. Clean and inspect the pump assembly:
    A. Remove accumulated dirt and sludge from pump casing.
    B. Clean motor and motor ventilation ports.
    C. Inspect all electrical wiring, motor, and controls for signs of overheating, or damaged or worn insulation, loose or corroded connections, or damaged conduit.
2. Check that base bolts are securely fastened.
3. Drain pump housing, check suction, discharge and check valve for holding.
4. Remove rust and repaint.
5. Clean pump suction strainers, and pump packing water seal filter/strainer.
6. Cycle isolation valves two times. Do not cycle triple duty valves or balancing valves.
7. Remove tags, and start the pump.
    A. Check for excessive vibration.
    B. Check action of check valve.
    D. Adjust the packing if necessary.
8. Perform an operational test of the pump assembly.
    A. Check the flanges and fittings for leaks.
    B. Check for excessive leakage at the shaft seal.
    C. Record the inlet and outlet pressures.
9. Return the unit to service.

Preventive Maintenance Checklist: CP45AN

- ***Code: CP45AN***
- ***Frequency: Annual***
- ***Description: CHLORINE ANALYZER (CL500)***
- ***Asset Type : PANEL, CONTROL***

Task Summary

1. Inspect chlorine concentration and replace reagents.
2. Replace chlorine analyzer pump tubing.
3. Replace analyzer tubing.

(T)ools, (S)afety Equipment, and (M)aterials Required

1. Electrician's toolset.
2. Reagents. (Global 09953GW, 09954GW)
3. Curvette (Global 25018GW)
4. Tubing/Cuvette Kit (Global 09950GW)
5. Deionized water.
6. Mixing bottles.

Safety Procedures

1. Follow site safety procedures.
2. Record and report equipment damage or deficiencies.
3. Record all test results in the component maintenance log.
4. Obtain and review manufacturer operation and maintenance instructions.
5. Wear protective equipment when handling chemicals.
6. Dispose of trash properly.

Procedures

1. Change the reagents (with a 2.5-minute cycle time).
2. The external strainer should be checked and cleaned if necessary.

3. The glass cuvette should be inspected. Check for excessive debris on the inside surface of the glass. It is suggested to keep a spare cuvette to replace when required. The old cuvette may be cleaned, if possible, for future replacement.
4. Three-Month Tubing Replacement.
    A. Flush the system to reduce personal contact with the reagents.
    B. Press SERVICE to stop the flow of sample water and drain the cuvette.
    C. Remove and retain the thumb screw on top of the pump; pull the pump hammer and spring up and out of the way. There is no need to completely remove the hammer and spring.
    D. Working on one reagent side at a time. Replace the "B" (black) tubing between optics inlet and the check valve OUTLET. Discard the old "B" tubing.
    E. Ensure the check valve is placed into its seat.
    F. Repeat steps 4 & 5 for the other reagent.
    G. Replace the hammer and spring back into place and secure with the thumb screw.
    H. Check the drawing on the following page to ensure correct installation.
5. Annual Tubing Replacement:
    A. Replace the two "A" Cap Assemblies.
    B. Turn the knurled top on the optics system counterclockwise (as viewed for the top) until the cuvette just "pops" out, but do not remove the top.
    C. When the cuvette "pops" out, move the retaining oring & remove the cuvette. You may need a stiff wire such as a bent paper clip to grasp the cuvette. Retain this cuvette for future use if it can be cleaned.
    D. Install the new cuvette by pushing it firmly in place and turning the knurled top clockwise until the cuvette is held securely.
    E. Check the drawing on the following page to ensure correct installation.
6. Return to operation.

Preventive Maintenance Checklist: CP45MO

- ***Code: CP45MO***
- ***Frequency: Monthly***
- ***Description: CHLORINE ANALYZER (CL500)***
- ***Asset Type: PANEL, CONTROL***

Task Summary
1. Inspect chlorine concentration and replace reagents.

(T)ools, (S)afety Equipment, and (M)aterials Required
1. Electrician tool set.
2. Reagents. (Global 09953GW, 09954GW)
3. Curvette (Global 25018GW)
4. Deionized water.

Safety Procedures
1. Follow site safety procedures.
2. Record and report equipment damage or deficiencies.
3. Record all test results in the component maintenance log.
4. Obtain and review manufacturer operation and maintenance instructions.
5. Wear protective equipment when handling chemicals.
6. Dispose of trash properly.

Procedures
1. Change the reagents (with a 2.5-minute cycle time).
2. The external strainer should be checked and cleaned if necessary.

1. The glass cuvette should be inspected. Check for excessive debris on the inside surface of the glass. It is suggested keeping a spare cuvette to replace when required. The old cuvette may be cleaned, if possible, for future replacement.

Preventive Maintenance Checklist: CP45QU

- ***Code: CP45QU***
- ***Frequency: Quarterly***
- ***Description: CHLORINE ANALYZER (CL500)***
- ***Asset Type: PANEL, CONTROL***

Task Summary

1. Inspect chlorine concentration and replace reagents.
2. Replace chlorine analyzer pump tubing.

(T)ools, (S)afety Equipment, and (M)aterials Required

1. Electrician's toolset.
2. Reagents. (Global 09953GW, 09954GW)
3. Curvette (Global 25018GW)
4. Tubing/Cuvette Kit (Global 09950GW)
5. Deionized water.
6. Mixing bottles.

Safety Procedures

1. Follow site safety procedures.
2. Record and report equipment damage or deficiencies.
3. Record all test results in the component maintenance log.
4. Obtain and review manufacturer operation and maintenance instructions.
5. Wear protective equipment when handling chemicals.
6. Dispose of trash properly.

Procedures

1. Change the reagents (with a 2.5 minute cycle time).
2. The external strainer should be checked and cleaned if necessary.
3. The glass cuvette should be inspected. Check for excessive debris on the inside surface of the glass. It is suggested to keep a spare cuvette to replace when required. The old cuvette may be cleaned, if possible, for future replacement.
4. Three Month Tubing Replacement.
    A. Flush the system to reduce personal contact with the reagents.
    B. Press SERVICE to stop the flow of sample water and drain the cuvette.
    C. Remove and retain the thumb screw on top of the pump; pull the pump hammer and spring up and out of the way. There is no need to completely remove the hammer and spring.
    D. Working on one reagent side at a time. Replace the “B” (black) tubing between optics inlet and the check valve OUTLET. Discard the old “B” tubing.
    E. Ensure the check valve is placed into its seat.
    F. Repeat steps 4 & 5 for the other reagent.
    G. Replace the hammer and spring back into place and secure with the thumb screw.
    H. Check the drawing on the following page to ensure correct installation.
    I. Return to operation as described.

Preventive Maintenance Checklist: GACF35AN

- ***Code: GACF35AN***

- ***Frequency: Annual***
- ***Description: WATER TREATMENT SYSTEM CARBON FILTER SKID Annual***
- ***Asset Type: FILTER***

Task Summary

1. Check the system for proper performance.
2. Service the system.
3. Check the backwash flow controller for proper operation.
4. Evaluate filter media for replacement.

(T)ools, (S)afety Equipment, and (M)aterials Required

1. Mechanics tool set.
2. Cleaning materials.

Safety Procedures

1. Schedule outage with operating staff.
2. Follow site safety rules and your supervisor's instructions.
3. Obtain and review manufacturer's operation and maintenance instructions.
4. Record and report to your supervisor any equipment damage or problems found during this maintenance task.
5. Record all test results in the equipment maintenance log.

Procedures

1. Check for leakage.
2. Review daily records for negative trends.
3. Check and clean the backwash flow controller
4. Check and clean the pilot valve assembly.
5. Check and clean the brunematic valves.
6. Check and clean the pilot strainer.
7. Clean the unit.
8. Sanitize the unit and return to service.
9. Cycle the backwash flow controller and verify proper operation.
10. Verify no diagnostic errors on the controller.

Preventive Maintenance Checklist: GACF35WK

- ***Code: GACF35WK***
- ***Frequency: Weekly***
- ***Description: WATER TREATMENT SYSTEM CARBON FILTER SKID Weekly***
- ***Asset Type: FILTER***

Task Summary

1. Check the system for proper performance.

(T)ools, (S)afety Equipment, and (M)aterials Required

1. None.

Safety Procedures

1. Schedule outage with operating staff.
2. Follow site safety rules and your supervisor's instructions.
3. Obtain and review manufacturer's operation and maintenance instructions.
4. Record and report to your supervisor any equipment damage or problems found during this maintenance task.
5. Record all test results in the equipment maintenance log.

Procedures

1. Check for leakage.
2. Verify no diagnostic errors on the controller.
3. Review daily records for negative trends.

Preventive Maintenance Checklist: SP07AN

- ***Code: SP07AN***
- ***Frequency: Annual***
- ***Description: SUMP PUMP***
- ***Asset Type: PUMP, SUMP***

Task Summary

1. Clean and inspect sump pump.
2. Operational test of the sump pump.

(T)ools, (S)afety Equipment, and (M)aterials Required

1. Mechanics tool set.
2. Cleaning equipment and materials.
3. Lubricants.

Safety Procedures

1. Tag out and lock out equipment before servicing.
2. Schedule outage with operating personnel.
3. Strainer cleaning requires removal of pump unit and should be handled as a repair.
4. Excessive sediment and debris, not removed by flushing the pit should be handled on a separate work order.
5. Follow site safety procedures and your supervisor instructions.
6. Record and report to your supervisor any equipment damage or deficiencies found during this maintenance task.
7. Record all test results in the component maintenance log.
8. Obtain and review manufacturer OM instructions.
9. If the material removed from the pump is hazardous, follow Post instructions for disposal.

Procedures

1. Tag out units.
2. Clean sand, sludge, and deposits from sump and pump screen.
3. Inspect for corrosion of deterioration. Treat as necessary
4. Tighten loose bolts, screws, or fittings. 5. Inspect sump pump discharge line for leaks and tightness.
5. Remove tags and energize circuit.
6. Test sump pump "onoff" water level switch by adding water to sump and checking operation.
    A. On two pump installations: With both pumps off, add water to just above the "alarm" level. Turn both pumps on. Verify alarm sounds and both pumps start.
    B. Verify one pump stops when level drops below upper control.
7. Check sump pump/motor for excessive noise or vibration.

8. MOTOR AND CONTROLS PROCEDURES (ANNUAL):

A. Clean exterior of motor surfaces of soil accumulation.
B. Check hold down bolts and grounding straps for tightness.
C. Lubricate bearings.

D. Check hold down bolts and grounding straps for tightness.
E. Check controller for proper operation. Check electrical connections for tightness. Relamp as necessary.
F. Remove tags and return to service.

Preventive Maintenance Checklist: WT083Y

- ***Code: WT083Y***
- ***Frequency: Every Three Years***
- ***Description: TANK WATER WITH CONTROLS***
- ***Asset Type : TANK, WATER***

Task Summary

1. Test operation of sluice gate.
2. Operational test of the water tank.
3. Test operation of controls.
4. Clean and inspect the water tank.

(T)ools, (S)afety Equipment, and (M)aterials Required

1. Mechanic's tool set.
2. Cleaning equipment and materials.
3. Chlorine disinfectant.

Safety Procedures

1. Perform proper lockout/tagout steps of site safety procedures to be sure machinery will not start.
2. Schedule outage with operating staff.
3. Follow site safety rules and your supervisor's instructions.
4. Record and report to your supervisor any equipment damage or problems found while performing this maintenance task.
5. Record all test results in the component maintenance log.
6. Obtain and review manufacturer's operation and maintenance instructions.
7. All tests shall follow and meet the manufacturer's test procedures and standard values.

Procedures

1. Check the visible interior of tank including fittings, hatches, ladders, manholes, and handholes for signs of corrosion, and correct as indicated.
2. Clean, test and inspect sight glasses, valves, fittings, drains and controls.
3. Clean and inspect tank level control panel.
   A. Clean the outside of the panel and inspect front panel components for damage.
   B. Clean the interior panel components of dust and foreign material.
   C. Inspect electrical wiring for damage and loose connections.
   D. Inspect relays for damaged contacts and signs of overheating.
4. Perform an operational test on the panel/electronic control units and mechanical level control equipment.
   A. Verify that all alarm, control, and communication circuits operate correctly.
   B. Check to be sure that mechanical level indicating and control devices are functioning properly.
5. Look for presence of contamination (bugs, frogs, snakes, paper, plastic, etc.). Notify your supervisor if found.
6. Drain and flush the tank.
7. Open the tank and remove scale and sludge buildup by mechanical or chemical means.
8. Inspect the interior of tank.
9. Note any requirement for recoating.

10. Clean with a chlorine-based disinfectant approved for potable water.
11. Refill the tank.
12. Return the system to service.

Preventive Maintenance Checklist: WT08AN

- ***Code: WT08AN***
- ***Frequency: Annual***
- ***Description: TANK WATER WITH CONTROLS***
- ***Asset Type: TANK, WATER***

Task Summary

1. Test operation of sluice gate.
2. Operational test of the water tank.
3. Test operation of controls.

(T)ools, (S)afety Equipment, and (M)aterials Required

1. Mechanic's tool set.
2. Cleaning equipment and materials.

Safety Procedures

1. Perform proper lockout/tagout steps of site safety procedures to be sure machinery will not start.
2. Schedule outage with operating staff.
3. Follow site safety rules and your supervisor's instructions.
4. Record and report to your supervisor any equipment damage or problems found while performing this maintenance task.
5. Record all test results in the component maintenance log.
6. Obtain and review manufacturer's operation and maintenance instructions.
8. All tests shall follow and meet the manufacturer's test procedures and standard values.

Procedures

1. Check the visible interior of tank including fittings, hatches, ladders, manholes, and handholes
9. for signs of corrosion and correct as indicated.
2. Clean, test and inspect sight glasses, valves, fittings, drains and controls.
3. Clean and inspect tank level control panel.
    A. Clean the outside of the panel and inspect front panel components for damage.
    B. Clean the interior panel components of dust and foreign material.
    C. Inspect electrical wiring for damage and loose connections.
    D. Inspect relays for damaged contacts and signs of overheating.
4. Perform an operational test on the panel/electronic control units and mechanical level control equipment.
    A. Verify that all alarm, control, and communication circuits operate correctly.
    B. Check to be sure that mechanical level indicating and control devices are functioning properly.
5. Look for presence of contamination (bugs, frogs, snakes, paper, plastic, etc.). Notify your supervisor if found.
6. Return the system to service.

Preventive Maintenance Checklist: WT14QU

- ***Code: WT14QU***
- ***Frequency: Quarterly***

- ***Description: TANK, WATER STORAGE (300 GAL OR LESS, LITE USE)***
- ***Asset Type : TANK, WATER***

Task Summary

1. Clean and inspect the water tank.

(T)ools, (S)afety Equipment, and (M)aterials Required

1. Mechanic tool set.
2. Cleaning equipment and materials.
3. Chlorine disinfectant.

Safety Procedures

1. Schedule work with operating personnel.
2. Follow site safety procedures and your supervisor's instructions.
3. Record and report to your supervisor any equipment damage or seficiencies found while performing this maintenance task.
4. Record results in the component maintenance log.

Procedures

1. Drain tank and clean.
2. Sanitize tank with chlorine disinfectants.
3. Flush tank and refill.
4. Return system to service and test automatic controls.

Daily Maintenance checklist.

DAILY MAINTENANCE
MONTH: YEAR:

Task Description	Raw Water Chlorine	Raw Water pH	Raw Water Turbidity	Raw Water Bag Filter Inlet Pressure	Raw Water Bag Filter Oulet Pressure	Raw Water Feed Flow	Carbon Filter Inlet Pressure	Carbon Filter Outlet Pressure	Potable Water Chlorine	Potable Water pH	Potable Water Turbidity	Potable Water Cartrigde Filter Inlet Pressure	Potable Water Cartrigde Filter Outlet Pressure	Potable Water Feed Flow	Raw Water Tank A Level	Raw Water Tank B Level	Potable Water Tank A Level	Potable Water Tank B Level	INITIALS
Unit	PPM		NTU	psi	psi	gpm	psi	psi	PPM		NTU	psi	psi	gpm	%	%	%	%	
1																			
2																			
3																			
4																			
5																			
6																			
7																			
8																			
9																			
10																			
11																			
12																			
13																			
14																			
15																			
16																			
17																			
18																			
19																			
20																			
21																			
22																			
23																			
24																			
25																			
26																			
27																			
28																			
29																			
30																			
31																			

NAME _____ SIGNATURE _____

DAILY MAINTENANCE
MONTH: YEAR:

Task Description	NOB Chlorine	NOB pH	Greensand Filter Inlet Pressure	Greensand Filter Outlet Pressure	Calcite Filter Inlet TDS	Calcite Filter Outlet TDS	Raw Water Transfer Pump A Outlet Pressure	Raw Water Transfer Pump B Outlet Pressure	Raw Water Recirc Pump A Outlet Pressure	Raw Water Recirc Pump B Outlet Pressure	Potable Water Recirc Pump A Outlet Pressure	Potabe Water Recirc Pump B Outlet Pressure	Raw Water Chlorine Tank Level	Potable Water Chlorine Tank Level	Potable Water NaOH Tank Level	Potable Water Corrossion Inhibitor Tank Level	Greensand Filter Chlorine Tank Level	Raw Water Chlorine Grab Sample	Raw Water pH Grab Sample	Raw Water Turbidity Grab Sample	Potable Water Chlorine Grab Sample	Potable Water pH Grab Sample	Potable Water Turbidity Grab Sample	Greensand Filter Iron	Greensand Filter Manganese	INITIALS
Unit	PPM		psi	psi	PPM	PPM	psi	psi	psi	psi	psi	psi	%	%	%	%	%	%	PPM	NTU	PPM		NTU	PPM	PPM	
1																										
2																										
3																										
4																										
5																										
6																										
7																										
8																										
9																										
10																										
11																										
12																										
13																										
14																										
15																										
16																										
17																										
18																										
19																										
20																										
21																										
22																										
23																										
24																										
25																										
26																										
27																										
28																										
29																										
30																										
31																										

NAME _____ SIGNATURE _____

WEEKLY MAINTENANCE

MONTH: YEAR:

Task Description	NOB Chlorine	NOB pH	Greensand Filter Inlet Pressure	Greensand Filter Outlet Pressure	Calcite Filter Inlet TDS	Calcite Filter Outlet TDS	Raw Water Transfer Pump A Outlet Pressure	Raw Water Transfer Pump B Outlet Pressure	Raw Water Recirc Pump A Outlet Pressure	Raw Water Recirc Pump B Outlet Pressure	Potable Water Recirc Pump A Outlet Pressure	Potable Water Recirc Pump B Outlet Pressure	Raw Water Chlorine Tank Level	Potable Water Chlorine Tank Level	Potable Water NaOH Tank Level	Potable Water Corrosion Inhibitor Tank Level	Greensand Filter Chlorine Tank Level	Raw Water Chlorine Grab Sample	Raw Water pH Grab Sample	Raw Water Turbidity Grab Sample	Potable Water Chlorine Grab Sample	Potable Water pH Grab Sample	Potable Water Turbidity Grab Sample	Greensand Filter Iron	Greensand Filter Manganese	INITIALS
Unit	PPM		psi	psi	PPM	PPM	psi	psi	psi	psi	psi	psi	%	%	%	%	%	%	PPM	NTU	PPM		NTU	PPM	PPM	
1																										
2																										
3																										
4																										
5																										
6																										
7																										
8																										
9																										
10																										
11																										
12																										
13																										
14																										
15																										
16																										
17																										
18																										
19																										
20																										
21																										
22																										
23																										
24																										
25																										
26																										
27																										
28																										
29																										
30																										
31																										

NAME _____ SIGNATURE _____

MONTHLY MAINTENANCE

MONTH: YEAR:

Task Description	Comments
Replace Raw Water Bag Filter A	
Replace Raw Water Bag Filter B	
Replace Potable Water Cartridge Filters A	
Replace Potable Water Cartridge Filters B	
Check Backwash Sequence of Carbon Filter A	
Check Backwash Sequence of Carbon Filter B	
Check Backwash Sequence of Greensand Filter A	
Check Backwash Sequence of Greensand Filter B	

NAME _____

SIGNATURE _____

QUARTERLY MAINTENANCE

QUARTER: YEAR:

Task Description	Comments
Calibrate Raw Water Chlorine Sensor	
Calibrate Raw Water pH Sensor	
Calibrate Raw Water Turbidity Sensor	
Calibrate Potable Water Chlorine Sensor	
Calibrate Potable Water pH Sensor	
Calibrate Potable Water Turbidity Sensor	
Clean Raw Water Chlorine/pH Sensor Housing	
Clean Potable Water Chlorine/pH Sensor Housing	
Replace Raw Water Cl2 Dosing Pump Tubing	
Replace Potable Water Cl2 Dosing Pump Tubing	
Replace Potable Water NaOH Dosing Pump Tubing	
Replace Potable Water Corrossion Inhibitor Dosing Pump Tubing	
Replace Greensand Filter Cl2 Dosing Pump Tubing	

NAME _____

SIGNATURE _____

Semi-Annually (2 times per year):

Booster Pumps

1. Safety & Special Instructions:
    a. Perform applicable lockout/tag-out steps of site safety procedures.
2. Schedule outage with operating personnel.
3. Follow site and manufacturer's safety procedures.
4. Record and report equipment damage or deficiencies.
5. Obtain and review manufacturer operation and maintenance instructions.
6. All tests shall conform to the manufacturer test procedures and standard values.
7. Maintenance Description:
    a. Clean and inspect the boosters pump.
    b. Clean and inspect motor.
    c. Lubricate motor.
8. Maintenance Procedures:
9. Tag out unit.
10. Clean and inspect pump.
11. Clean accumulated dirt and grime from pump casing, shaft coupling, and motor.
12. Inspect electrical wiring, motor, and controls for signs of over-heating, broken insulation, loose or corroded connections, or damaged conduit.
13. Check for evidence of leaks.
14. Check alignment of coupling and security of baseplate mounting bolts.
15. Lubricate pump (if applicable).
16. Conduct operational test of the circulating pump.
17. Start pump. Check flanges and fittings for leaks.
18. Check for unusual noise or vibration.

19. Return the unit to service.
20. Check the motor.
21. Inspect electrical wiring, motor, and controls for signs of over-heating, broken insulation, loose or corroded connections, or damaged conduit.
22. Meggar check motor, record results.
23. Check running current and voltage for each phase, record results.
24. Lubricate the motor (if applicable). NOTES: DO NOT OVERGREASE THE MOTOR. USE MOTOR RATED GREASE. DO NOT USE PUMP GREASE IN THE MOTOR.

Quarterly:

Potable Water Treatment System

i. Maintenance Description:
1. Check and record pressures and chemical levels.
2. Replace chemical dosing detection probes

ii. Safety and Special Handling Description:

1. Chemicals must comply with the Environmental Protection Agency (EPA) regulations, ANSI/NSF Standard 60 Certification and be handled in accordance with occupational safety requirements. Employ personal protection against corrosive or hazardous treatment chemicals as appropriate.
2. Be familiar with the Material Safety Data Sheets of any chemicals used in the water treatment program
3. Assure that post water treatment specialists understand the proper operation and maintenance of the equipment and correct any deficiencies found with on-site personnel's familiarizations with equipment.
4. Water treatment must be based on proven standard engineering practices and Post specific water treatment goals.
5. Follow treatment as directed by manufacturer.
6. Maintenance includes chemicals, chemical feeding, maintaining proper water conditions, controlling bleed off, protecting idle equipment, and record-,keeping
7. Ensure chemicals are properly stored, test equipment clean, and that chemicals have not passed expiration date.
8. All tests shall conform to the manufacturer test procedures and standard values.
9. Maintain records and test results

iii. Maintenance Procedures:

1. Review daily logs for trends
2. Check chemical levels in the chemical addition tanks. Adjust if necessary.
3. Check system for any signs of leakage
4. Check all tubing for tightness
5. Inspect and clean metering pumps:
   a. Check the pump diaphragm for damage, clean if needed.
   b. Check chemical seepage at vent hole.
   c. Check that the discharge tubing is connected firmly to the liquid end.
   d. Check that the liquid end is generally watertight (especially vent hole)
   e. Check for correct feed.
   f. Check electrical connections for wear.
6. Replace the sensors (pH, chlorine, as applicable).
   a. Clean filters, flow cell, and fittings.
7. Calibrate the new sensors.

8. Check chemical addition tanks to ensure no damage or leakage.
9. Test unit safety functions:
   a. Ensure the alarm relay works.
   b. Check the function of the flow sensor and ensure the controller stops.
10. Wipe down the unit.
11. Verify maintenance records for all components of the water treatment system.
12. Check total and free chlorine and pH in all domestic water tanks.

Annually:

Potable Water Treatment System

(In addition to all quarterly maintenance described above)

i. Safety & Special Instructions:
   1. Schedule outage with operating personnel.
   2. Follow site and manufacturer's safety procedures.
   3. Record and report any equipment damage or deficiencies found during this maintenance task.
   4. Record all test results in the component maintenance log.
   5. Obtain and review manufacturers operation and maintenance instructions.

ii. Maintenance Description:
   1. Check the system for proper performance.
   2. Service the system.
   3. Check the backwash flow controller for proper operation.
   4. Evaluate filter media for replacement (as applicable)

iii. Maintenance Procedures (General)
   1. Cycle the backwash flow controller and verify proper operation (as applicable).
   2. Evaluate any media for replacement.
   3. Conduct water quality testing to verify maintenance of water quality treatment goals as specified by section 10 of this contract. Have treated water tested by a certified laboratory for an analysis of the following parameters: pH, alkalinity, aluminum, calcium, copper, bromide, fluoride, nitrite, nitrate, orthophosphate, silica, strontium, iron, manganese, lead, magnesium, sodium, chloride, total hardness, total dissolved solids (TDS), turbidity, free chlorine, coliform bacteria, and temperature.

Water Well.

i. Safety & Special Instructions:
   1. Schedule work with operating personnel.
   2. Follow site and manufacturer's safety procedures.
   3. Record and report any equipment damage or deficiencies found during this maintenance task.
   4. Record all test results in the component maintenance log.
   5. Obtain and review manufacturer operation and maintenance instructions.

ii. Maintenance Description:
   1. Inspect the well-head casing and seals for cleanliness and water tightness integrity.
   2. Perform a water chemistry and bacterial test.

iii. Maintenance Procedures:

1. Note any sources of potential well contamination and verify chemicals, fertilizers, fuel or oil, paint, etc., are not stored near the well. Maintain clearance of 50 to 100 feet between the well and buildings, parked cars or other vehicles, etc.
2. Check the well cover or well cap on top of the well casing to ensure it is in good repair.
3. Check that the casing is free of cracks.
4. Check that the sanitary seal is secure and watertight.
5. Check that the ground slopes away from the well for at least 15 feet in all directions.
6. Check all backflow preventers and anti-siphon devices to ensure water is not siphoning back into the well.
7. Provide backflow annual certification test.
8. Sample the well and send to a certified laboratory for chemical and bacteriological analysis. Bacteriological tests to include: total coliform, fecal coliform, E. coli, and heterotrophic plate count (HPC) bacteria. Chemical/Physical tests to include: pH, alkalinity, total dissolved solids (TDS), turbidity, total iron (Fe), total manganese (Mn), nitrate, nitrite, total hardness, and ammonia.

Water Tanks with Controls (Above and Underground)

i. Safety & Special Instructions:
   1. Perform applicable lockout/tag-out steps of site safety procedures to ensure machinery will not start.
   2. Schedule outage with operating personnel.
   3. Follow site and manufacturer's safety procedures.
   4. Record and report to the post any equipment damage or deficiencies found while performing this maintenance task.
   5. Record all test results in the component maintenance log.
   6. Obtain and review manufacturer operation and maintenance instructions.
   7. All tests shall conform to the manufacturer test procedures and standard values.

ii. Maintenance Description:
   1. Test operation of sluice gate.
   2. Operational test of the water tank
   3. Test operation of controls.

iii. Maintenance Procedures:
   1. Examine visible interior of tank including fittings, hatches, ladders, manholes, and hand-holes for signs of corrosion, and correct as indicated.
   2. Clean, test and inspect sight glasses, valves, fittings, drains and controls.
   3. Clean and inspect tank level control panel.
      a. Clean exterior of panel and inspect front panel components for damage.
      b. Clean interior panel components of dust and foreign material.
      c. Inspect electrical wiring for damage and loose connections.
      d. Inspect relays for damaged contacts and signs of over-heating.
   4. Operational Test panel/electronic control units and mechanical level control equipment.
      a. Verify that all alarm, control, and communication circuits operate correctly.

b. Verify that mechanical level indicating and control devices are functioning properly.

5. Look for presence of contamination (bugs, frogs, snakes, paper, plastic, etc.). Notify the post if found.
6. Tanks should be drained, cleaned, and disinfected as per current U.S. Department of State Guidelines
7. Return system to service.

The water treatment Contractor shall determine the dosage levels of chemicals and stay within the specified operating parameters:

Parameters	**Maintenance Levels**
For Maintenance of Potable Water Quality Treatment Goals	
Chlorine Residual	0.2 – 0.5 mg/L in all parts of the distribution system
Microbiological and Chemical constituents	Treated water meets U.S. Environmental Protection Agency Primary and Secondary Drinking Water Regulations (40 CFR Parts 141-143)
For Maintenance of Piping and Equipment	
Corrosion on mild steel	Less than 2.0 mpy
Pitting attack on mild steel	None
Corrosion on copper alloys	Less than 0.2 mpy
Scaling and deposition	None
Microbiological fouling	1. No visible deposits 2. No health hazards 3. Total Heterotrophic Plate Count (HPC) less than 500/CFU