DEXTER NATIONAL FISH HATCHERY AND TECHNOLOGY CENTER - PHASE I

NOVEMBER 1993

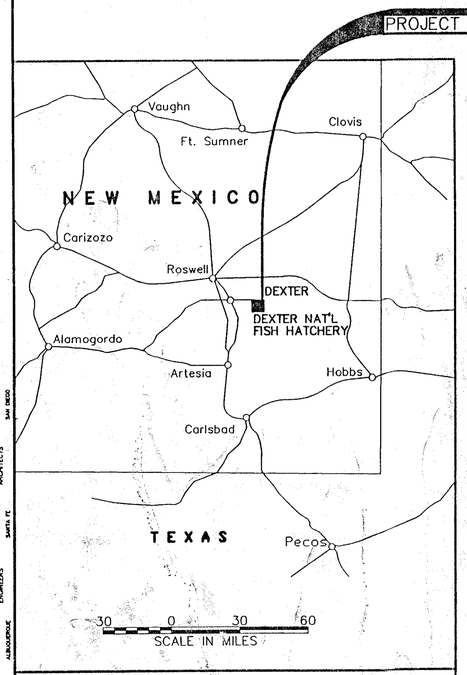

SITE VICINITY MAP

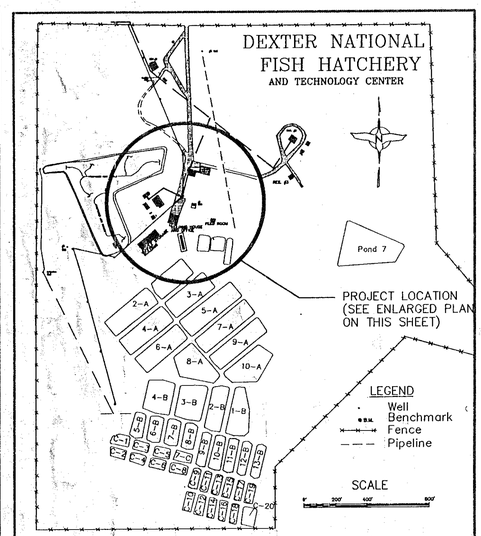

PROJECT LOCATION MAP

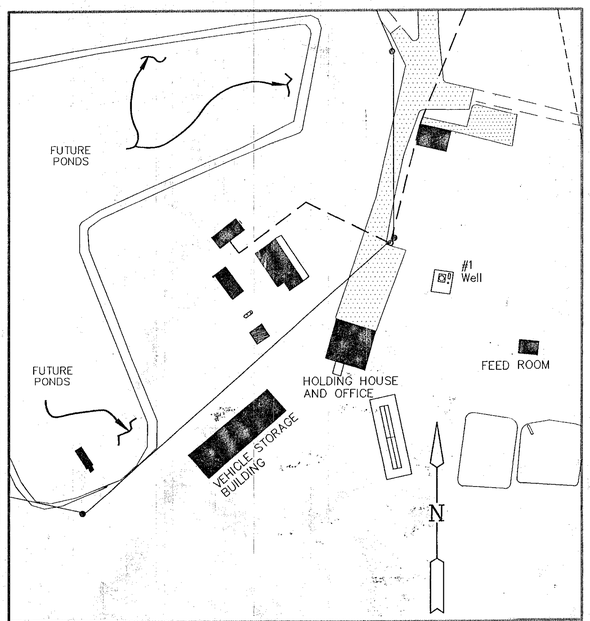

ENLARGED PLAN (EXISTING)

REDRAWN FOR RECORD PURPOSES

STATE OF NEW MEXICO
STEVEN T. KOFFMAN
NO. 1233
12-20-95
REGISTERED ARCHITECT

RECORD DRAWING
Date DECEMBER 1995
These drawings have been revised based on the construction records of the owner. While the information submitted by the Owner will be assumed to be reliable, the Engineer will not be responsible for the accuracy of this information nor for errors or omissions which may appear in the record document as a result thereof.

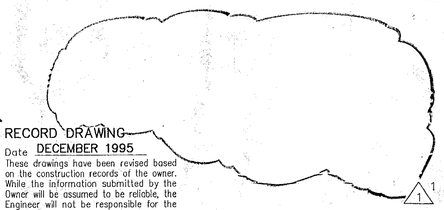

SUBMITTED BY
CHIEF DENVER ENGINEERING CENTER

REVIEWED BY
NAME:
TITLE:
DATE:

DESIGNED	LH	DRAWN	LH
CHECKED	LH	DATE	NOV. 1993

REVISIONS	DATE	SUBMITTED BY
1 AS-BUILT	12/95	DLJ

APPROVED BY: DATE:

DEXTER NATIONAL FISH HATCHERY AND TECHNOLOGY CENTER
COVER AND SITE VICINITY MAP
PROJECT LOCATION MAP AND ENLARGED PLAN
CHAVEZ COUNTY NEW MEXICO

SHEET NO. 1 OF 64

DRAWING NO. SEC – NM – 133 – 100.0

U.S. FISH & WILDLIFE SERVICE

UNITED STATES DEPARTMENT OF THE INTERIOR
FISH AND WILDLIFE SERVICE
DENVER ENGINEERING CENTER

LEEDSHILL-HERKENHOFF INC. ENGINEERS ALBUQUERQUE SANTA FE ARCHITECTS SAN DIEGO

I:\DWGS\133\DEXCOVER.72-15-85.PRP

INDEX OF DRAWINGS

DWG	DISCIPLINE / TITLE
	GENERAL
G1	COVER SHEET, SITE VICINITY MAP, PROJECT LOCATION MAP, AND ENLARGED PLAN
G2	INDEX OF DRAWINGS, GENERAL NOTES, BID SCHEDULES & SYMBOLS LEGEND
	CIVIL
C1	EXISTING SITE SURVEY PLAN
C2	SITE DEMOLITION PLAN
C3	SITE LAYOUT PLAN
C4.1	SITE UTILITY PLAN
C5	SITE GRADING PLAN
C6	TYPICAL CROSS SECTIONS
C7	DETAILS
	ARCHITECTURAL
A1	FISH CULTURE BUILDING – FLOOR PLAN
A2	FISH CULTURE BUILDING – REFLECTED CEILING PLAN AND DETAILS
A3	FISH CULTURE BUILDING – ROOF PLAN
A4	FISH CULTURE BUILDING – ELEVATIONS
A5	FISH CULTURE BUILDING – BUILDING SECTIONS
A6	FISH CULTURE BUILDING – WALL SECTIONS
A7	FISH CULTURE BUILDING – WALL/ROOF DETAILS
A8	FISH CULTURE BUILDING – SCHEDULES AND WINDOW DETAILS
A9	FISH CULTURE BUILDING – DOOR DETAILS AND INTERIOR PLANS AND ELEVATIONS
	STRUCTURAL
S1	FISH CULTURE BUILDING – FOUNDATION PLAN
S2	FISH CULTURE BUILDING – ROOF FRAMING PLAN
S5	FOUNDATION DETAILS
S6	FOUNDATION DETAILS

DWG	DISCIPLINE / TITLE
	MECHANICAL
M1	MECHANICAL SYMBOL LEGEND
M2	FISH CULTURE BUILDING – HVAC PLAN
M3	FISH CULTURE BUILDING – PLUMBING PLAN
M6	MECHANICAL ISOMETRICS
M7	MECHANICAL HVAC DETAILS
M8	MECHANICAL PLUMBING DETAILS AND FIXTURE SCHEDULE
M9	MECHANICAL EQUIPMENT SCHEDULES
	ELECTRICAL
E1	ELECTRICAL LEGEND
E2	ELECTRICAL LEGEND
E3	ELECTRICAL SITE PLAN DEMOLITION
E4	ELECTRICAL SITE PLAN
E5	POWER SYSTEM ONE LINE
E6	SPECIAL SYSTEMS ONE LINES AND DIAGRAMS
E7	FISH CULTURE BUILDING – POWER PLAN
E8	FISH CULTURE BUILDING – LIGHTING PLAN
E9	FISH CULTURE BUILDING – SPECIAL SYSTEMS PLAN
E13	ENLARGED PLAN AND DETAILS
E14	CONTROL SCHEMATICS
E15	CONTROL SCHEMATICS
E16	FISH CULTURE BUILDING – PANEL SCHEDULES
E18	SCHEDULES
E19	ELECTRICAL DETAILS
	FISH CULTURE WATER SUPPLY
W1	FISH CULTURE BUILDING – REFLECTED CEILING PIPING PLAN
W2	FISH CULTURE BUILDING – ISOMETRIC CEILING PIPING PLAN
W3	FISH CULTURE BUILDING – DETAILS

1/1

SYMBOLS LEGEND

SECTION CUT — SECTION LETTER; SHEET NUMBER WHERE SECTION IS REFERENCED; SHEET NUMBER WHERE SECTION IS LOCATED

ELEVATION POINTER — ELEVATION LETTER; DIRECTION OF VIEWS; SHEET NUMBER WHERE ELEVATION IS REFERENCED; SHEET NUMBER WHERE ELEVATION IS LOCATED

DRAWING TITLE — DETAIL NUMBER; DRAWING NAME; SCALE : X" = 1'-0"; SHEET NUMBER WHERE DETAIL IS REFERENCED; SHEET NUMBER WHERE DETAIL IS LOCATED

DOOR NUMBER — 000

COLUMN LINES — 1; A

ROOM NAME / NUMBER — ROOM NAME; 000

WINDOW NUMBER — 0

KEYNOTE — 1

REDRAWN FOR RECORD PURPOSES

GENERAL NOTES

1 A.F.S. – AT FULL SCALE (FOR 22" x 34" DRAWINGS)

2 EQUATION SCALES ARE SHOWN FOR 22" x 34" DRAWINGS ONLY. CONTRACTOR SHOULD REFER TO BAR SCALE ON REDUCED SIZED DRAWINGS.

3 METRIC BAR SCALE ADDED FOR REFERENCE ONLY

1/3

1/2

RECORD DRAWING
Date DECEMBER 1995
These drawings have been revised based on the construction records of the owner. While the information submitted by the Owner will be assumed to be reliable, the Engineer will not be responsible for the accuracy of this information nor for errors or omissions which may appear in the record document as a result thereof.

STATE OF NEW MEXICO — STEVEN KOFFMAN — NO. 1232 — 12-20-95 — REGISTERED ARCHITECT

48/90024.31AD5/DEXINDEX/12-20-95/FKP

REVISION	STATUS	DATE	DESCRIPTION	BY
1/3	AS-BUILT	12/95	RECORD DRAWING	DLJ

DEXTER NATIONAL FISH HATCHERY AND TECHNOLOGY CENTER – PHASE I

INDEX OF DRAWINGS, GENERAL NOTES, BID SCHEDULES & SYMBOLS LEGEND

G 2

DATE	DESIGNED	DRAWN	CHECKED	DRAWING NO.
NOV. 1993	STK	FKP	DLJ	S.E.C. – NM – 133 – 101.0

LEEDSHILL-HERKENHOFF, INC. ALBUQUERQUE ENGINEERS SANTA FE ARCHITECTS SAN DIEGO

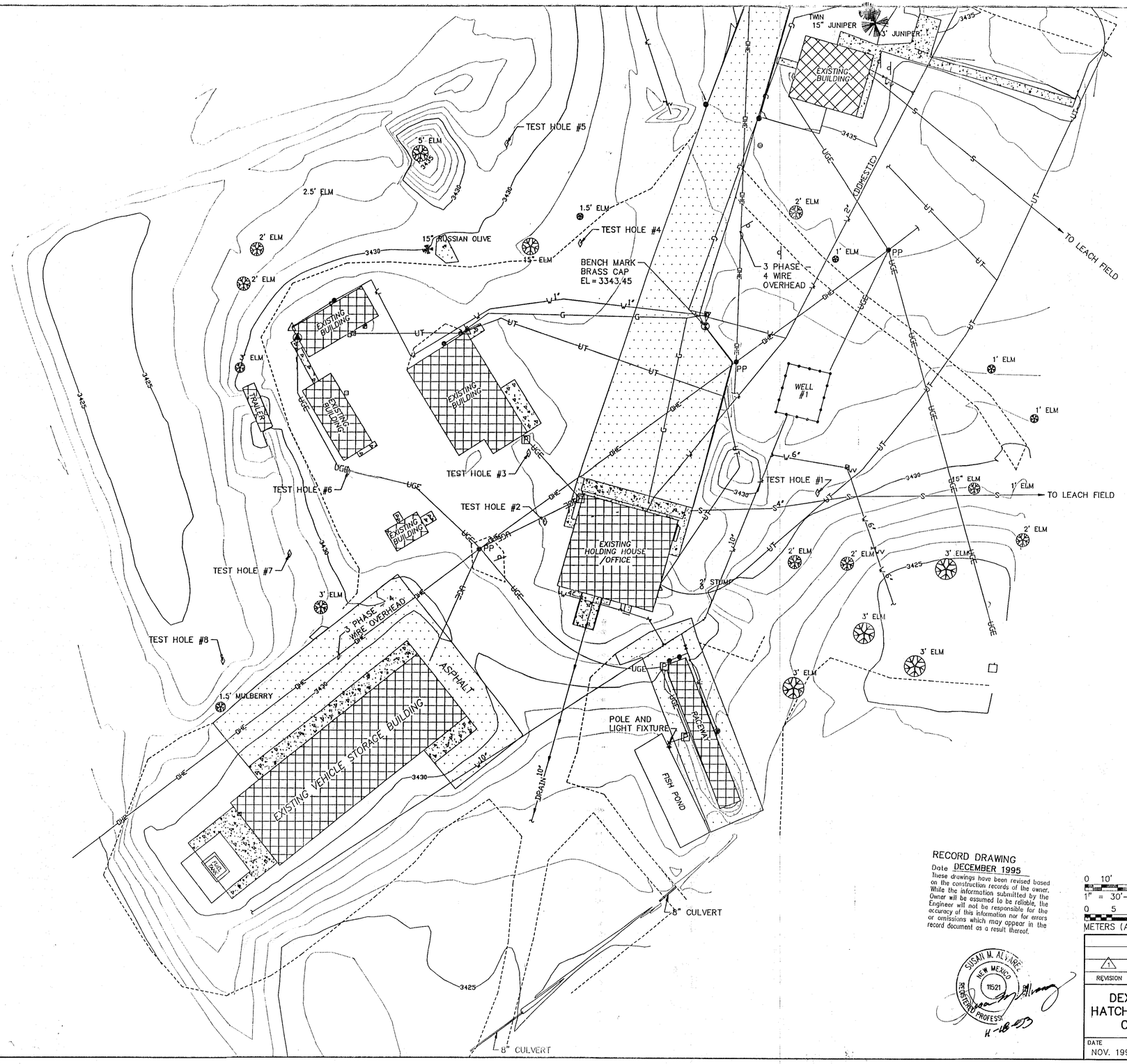

GENERAL NOTES

1. INFORMATION SHOWN ON THIS SHEET IS BASED UPON FIELD SURVEY PERFORMED BY JOHN D. JAQUESS & ASSOCIATES OF ROSWELL, NEW MEXICO, SEPTEMBER 1993.
2. TEST HOLE LOCATIONS INDICATE TEST BORINGS DONE BY VINYARD & ASSOCIATES, INC. THE REPORT ASSOCIATED WITH THE TEST HOLES IS TITLED "GEOTECHNICAL INVESTIGATION, ADDITIONS TO THE DEXTER NATIONAL FISH HATCHERY AND TECHNOLOGY CENTER" AND IS DATED AUGUST 6, 1993. THE REPORT IS INCLUDED IN THE SPECIFICATIONS FOR THIS PROJECT.
3. PROJECT BENCHMARK: BRASS CAP LOCATED APPROXIMATELY 116 FEET NNE OF HOLDING HOUSE/OFFICE BUILDING.
   ELEV 3343.45
   N 8913.2996
   E 10,960.4035
   ALL COORDINATES SHOWN ARE GROUND, BASED ON LOCAL COORDINATE SYSTEM.

LEGEND

- ELECTRIC METER BOX
- PP — POWER POLE
- WATER RISER
- CLEAN OUT
- TELEPHONE RISER
- ELECTRIC STREET LIGHT
- TEST HOLE
- PHONE BOX
- WV — WATER VALVE
- GAS RISER
- BRASS CAP: ELEV. 3343.45
- SIGN
- ELECTRIC RISER
- 1' ELM — TREE, CALIPER SIZE, TYPE
- UGE — UNDERGROUND ELECTRIC
- OHE — OVERHEAD ELECTRIC
- UT — UNDERGROUND PHONE
- DRAIN — DRAIN LINE
- G — GAS LINE
- S — SANITARY SEWER LINE
- EXISTING STRUCTURE
- EDGE OF GRAVEL
- ASPHALT PAVING
- CONCRETE RAMP OR WALK
- EXISTING CHAIN LINK FENCE

N

0 10' 30' 60' 90'
1" = 30'-0" (A.F.S.)
0 5 10 20 30
METERS (A.F.S.)

RECORD DRAWING
Date DECEMBER 1995
These drawings have been revised based on the construction records of the owner. While the information submitted by the Owner will be assumed to be reliable, the Engineer will not be responsible for the accuracy of this information nor for errors or omissions which may appear in the record document as a result thereof.

SUSAN M. ALVAREZ NEW MEXICO 11521 REGISTERED PROFESSIONAL

30/90024.31CD2/SVYBASE/11-15-93/KHK

REVISION	STATUS	DATE	DESCRIPTION	BY
1	AS-BUILT	12/95	RECORD DRAWING	GN

DEXTER NATIONAL FISH HATCHERY AND TECHNOLOGY CENTER – PHASE I

EXISTING SITE SURVEY PLAN

DATE	DESIGNED	DRAWN	CHECKED	DRAWING NO.
NOV. 1993	GN	TJL	SMA	S.E.C. – NM – 133 – 102.0

C 1

LEEDSHILL–HERKENHOFF, INC.
ALBUQUERQUE ENGINEERS SANTA FE ARCHITECTS SAN DIEGO

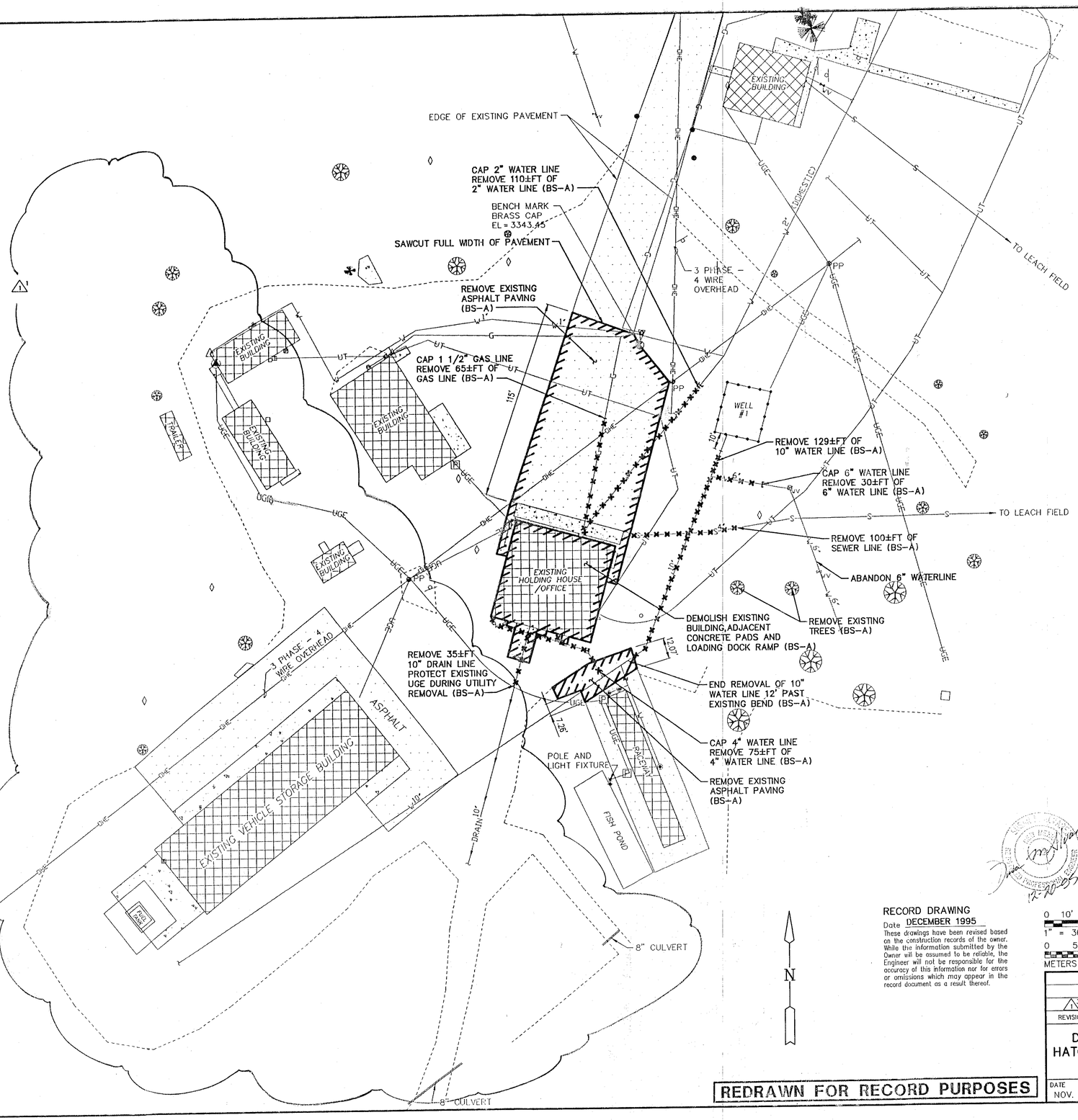

GENERAL NOTES

1. CONTRACTOR MUST COORDINATE ALL UTILITY REMOVAL WITH CONTRACTING OFFICER.
2. SEE ELECTRICAL DEMOLITION DRAWINGS FOR REMOVAL OR ABANDONING OF ELECTRIC AND TELEPHONE LINES.
3. COORDINATE THE SHUTDOWN OF WELL #1 WITH THE FISH HATCHERY PERSONNEL. DO ALL WORK ON THE 10" WATERLINE RELOCATION AFTER WELL #1 IS SHUT DOWN. MAXIMUM SHUTDOWN OF 30 DAYS.
4. DO ALL WORK ON THE 2" WATERLINE RELOCATION WHILE THE LINE REMAINS ACTIVE. TAP THE EXISTING 2" LINE, INSTALL, TEST AND DISINFECT THE RELOCATED LINE PRIOR TO THE REMOVAL OF THE EXISTING LINE.
5. COORDINATE THE SHUT OFF OF THE GAS LINE WITH THE FISH HATCHERY PERSONNEL. DO ALL WORK ON THE GAS LINE RELOCATION IN ACCORDANCE WITH REQUIREMENTS OF GAS COMPANY.
6. COORDINATE UTILITY DEMOLITION WITH UTILITY LAYOUT SHOWN ON SHEET C4. PROVIDE TEMPORARY CAPS ON LINES TO BE CONNECTED TO NEW CONSTRUCTION.
7. COORDINATE UTILITY SHUTOFF AND DEMOLITION WITH BUILDING REMOVAL

LEGEND

- LIMITS OF REMOVAL
- REMOVE BURIED UTILITY LINE
- TEST HOLE LOCATION

N

REDRAWN FOR RECORD PURPOSES

RECORD DRAWING
Date DECEMBER 1995
These drawings have been revised based on the construction records of the owner. While the information submitted by the Owner will be assumed to be reliable, the Engineer will not be responsible for the accuracy of this information nor for errors or omissions which may appear in the record document as a result thereof.

0 10' 30' 60' 90'
1" = 30'-0" (A.F.S.)
0 5 10 20 30
METERS (A.F.S.)

30/90024.31CD1/DEXDEMO/12-15-95/FKP

REVISION	STATUS	DATE	DESCRIPTION	BY
3	AS-BUILT	12/95	RECORD DRAWING	GN

DEXTER NATIONAL FISH HATCHERY AND TECHNOLOGY CENTER – PHASE I

SITE DEMOLITION PLAN

C 2

DATE	DESIGNED	DRAWN	CHECKED	DRAWING NO.
NOV. 1993	GN	KHK	SMA	S.E.C. – NM – 133 – 103.0

SHEET 4 OF 64

LEEDSHILL-HERKENHOFF, INC.
ENGINEERS SANTA FE ARCHITECTS SAN DIEGO
ALBUQUERQUE

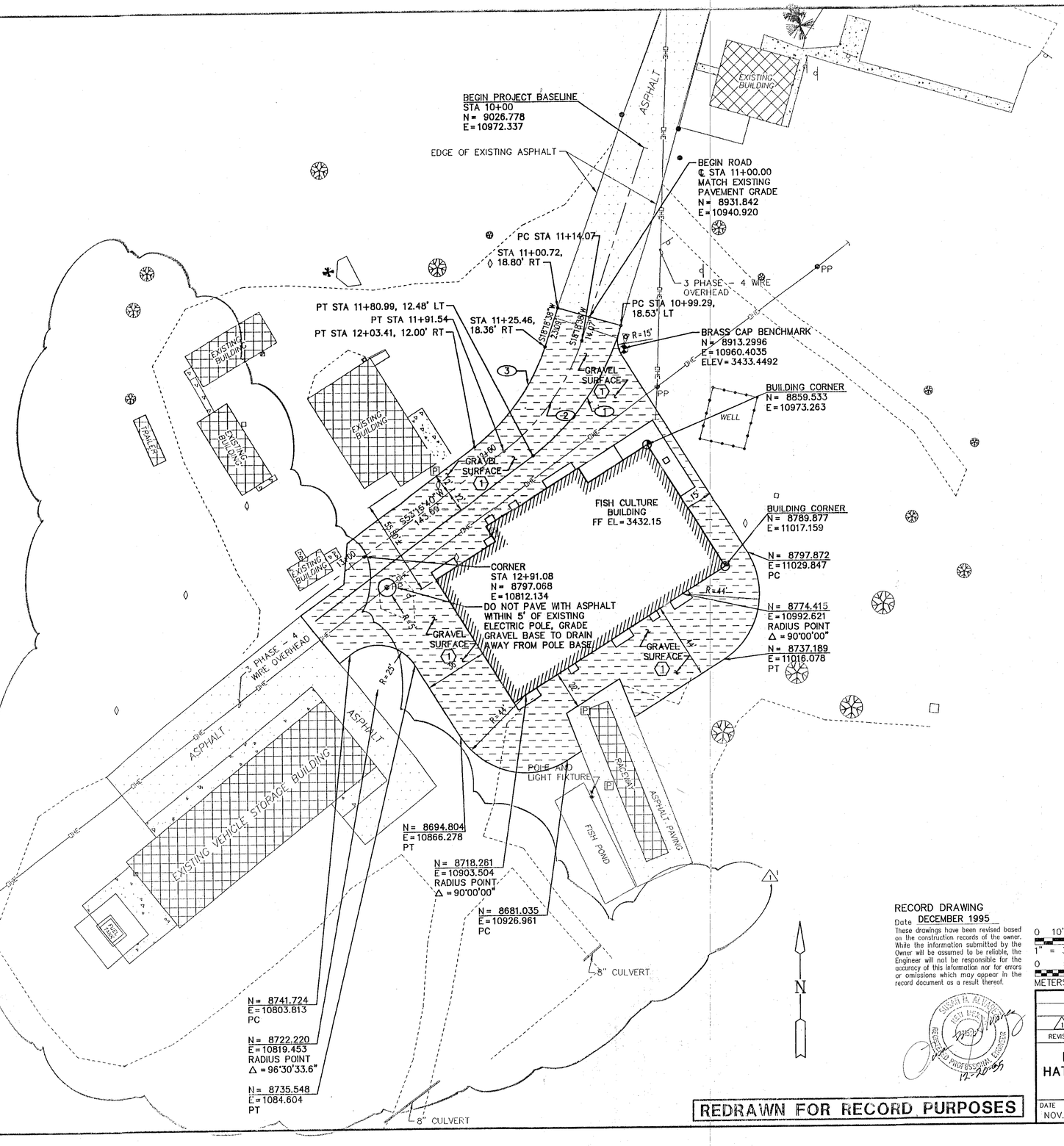

GENERAL NOTES

1. SEE STRUCTURAL DRAWINGS FOR PRECISE LOCATIONS AND DETAILS FOR ALL CONCRETE PADS OUTSIDE OF THE BUILDINGS.
2. DO NOT DISTURB THE BRASS CAP BENCHMARK.
3. PROJECT BENCHMARK: BRASS CAP LOCATED APPROXIMATELY 116 FEET NNE OF HOLDING HOUSE/OFFICE BUILDING.
   ELEV 3343.45 (BRASS CAP)
   N 8913.2996
   E 10,960.4035
   ALL COORDINATES SHOWN ARE GROUND, BASED ON LOCAL COORDINATE SYSTEM.

KEYED NOTES ⬡

1 THE BASE BID INCLUDES A GRAVEL SURFACE. IF THE PAVING ADDITIVE ALTERNATE IS SELECTED, THE SURFACE SHOWN AS GRAVEL SURFACE SHALL BE ASPHALTIC CONCRETE PAVING.
SEE SHEET C7, DETAIL A.

LEGEND

NEW	EXISTING	
		BUILDING
		GRAVEL LIMIT
		ASPHALT PAVEMENT
		GRAVEL SURFACING (BASE BID) OR ASPHALTIC CONCRETE PAVING (ADDITIVE ALTERNATE)
	— OHE —	OVERHEAD ELECTRIC LINES
	○	MANHOLE
	○PP	POWER POLE
		POLE AND LIGHT FIXTURE
	[P]	UTILITY BOX
		FENCE
	—o—	SIGN
	◊	TEST HOLE LOCATION
	⬭	ROADWAY CURVE NUMBER
	◔	BUILDING ORIENTATION POINT

CURVE DATA ⬭

1. R = 139.00'
   Δ = 37°08'00"
   L = 90.09'
   T = 46.69'
   CH = 88.52',
   S34°41'39"W
2. R = 127.00'
   Δ = 34°57'02"
   L = 77.47'
   T = 39.98'
   CH = 76.27',
   S35°47'09"W
3. R = 115.00'
   Δ = 34°57'02"
   L = 70.15'
   T = 36.20'
   CH = 69.07',
   S35°47'09"W

RECORD DRAWING
Date DECEMBER 1995

These drawings have been revised based on the construction records of the owner. While the information submitted by the Owner will be assumed to be reliable, the Engineer will not be responsible for the accuracy of this information nor for errors or omissions which may appear in the record document as a result thereof.

SUSAN H. KEYSER
NEW MEXICO
REGISTERED PROFESSIONAL ENGINEER
12-20-95

REDRAWN FOR RECORD PURPOSES

0 10' 30' 60' 90'
1" = 30'-0" (A.F.S.)
0 5 10 20 30
METERS (A.F.S.)

30/90024.31CD1/DEXSITE/12-15-93/FKP

REVISION	STATUS	DATE	DESCRIPTION	BY
1 3	AS-BUILT	12/95	RECORD DRAWING	GN

DEXTER NATIONAL FISH HATCHERY AND TECHNOLOGY CENTER - PHASE I

SITE LAYOUT PLAN

C 3

DATE	DESIGNED	DRAWN	CHECKED	DRAWING NO.
NOV. 1993	GN	KHK	SMA	S.E.C. - NM - 133 - 104.0

LEEDSHILL-HERKENHOFF, INC.
ENGINEERS SANTA FE ALBUQUERQUE ARCHITECTS SAN DIEGO

SHEET 5 OF 64

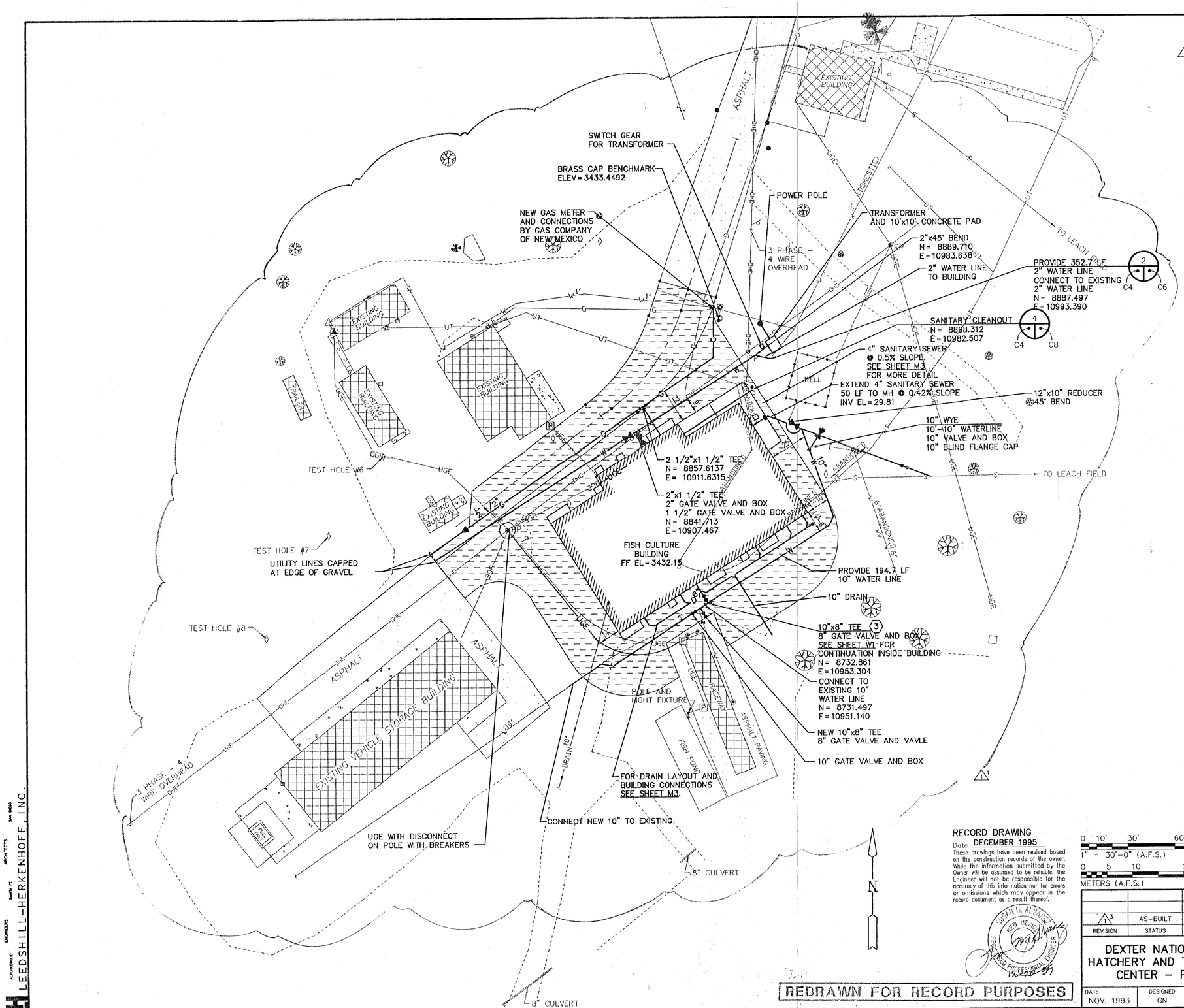

GENERAL NOTES

1. SEE MECHANICAL AND ELECTRICAL DRAWINGS FOR PRECISE LOCATION OF UTILITY CONNECTIONS INTO BUILDINGS. SEE MECHANICAL SPECIFICATIONS AND DRAWING FOR ALL GAS LINE DETAILS AND INFORMATION.
2. DO NOT DISTURB THE BRASS CAP BENCHMARK.
3. PROJECT BENCHMARK: BRASS CAP LOCATED APPROXIMATELY 116 FEET NNE OF HOLDING HOUSE/OFFICE BUILDING.
   ELEV 3343.45
   N 8913.2996
   E 10,960.4035
4. ALL COORDINATES SHOWN ARE GROUND, BASED ON LOCAL COORDINATE SYSTEM.
5. SEE ELECTRICAL DRAWINGS FOR ELECTRICAL AND TELEPHONE LINE INFORMATION.

KEYED NOTES

1 NOT USED

2 NOT USED

3 PROVIDE ALL WATERLINE FITTINGS WITH LOCKING RETAINER GLAND TYPE JOINTS.

LEGEND

NEW	EXISTING	
		BUILDING
		GRAVEL LIMIT
		ASPHALT PAVEMENT
		GRAVEL SURFACING (BASE BID) OR ASPHALTIC CONCRETE PAVING (ADDITIVE ALTERNATE)
	— OHE —	OVERHEAD ELECTRIC LINES
	— UGE —	UNDERGROUND ELECTRIC LINES
	— UT —	UNDERGROUND TELEPHONE LINES
	— G —	NATURAL GAS LINES
— W 10" —	— W —	WATER LINES
	— S —	SANITARY SEWER LINES
— D —	— DRAIN —	DRAIN LINE
		VALVE
		MANHOLE
	PP	POWER POLE
		POLE AND LIGHT FIXTURE
	P	UTILITY BOX
		FENCE
		SIGN
		TEST HOLE LOCATION

RECORD DRAWING
Date DECEMBER 1995
These drawings have been revised based on the construction records of the owner. While the information submitted by the Owner will be assumed to be reliable, the Engineer will not be responsible for the accuracy of this information nor for errors or omissions which may appear in the record document as a result thereof.

SUSAN H. ALVARD NEW MEXICO REGISTERED PROFESSIONAL ENGINEER 12-20-95

REDRAWN FOR RECORD PURPOSES

0 10' 30' 60' 90'
1" = 30'-0" (A.F.S.)
0 5 10 20 30
METERS (A.F.S.)

30/90024.31CD2/DEXUTIL/12-15-95/FKP

REVISION	STATUS	DATE	DESCRIPTION	BY
3	AS-BUILT	12/95	RECORD DRAWING	RER

DEXTER NATIONAL FISH HATCHERY AND TECHNOLOGY CENTER – PHASE I

SITE UTILITY PLAN

DATE	DESIGNED	DRAWN	CHECKED	DRAWING NO.
NOV. 1993	GN	KHK	SMA	S.E.C. – NM – 133 – 105.0

C 4.1

SHEET 6 OF 64

LEEDSHILL-HERKENHOFF, INC. ARCHITECTS SANTA FE SAN DIEGO ALBUQUERQUE ENGINEERS

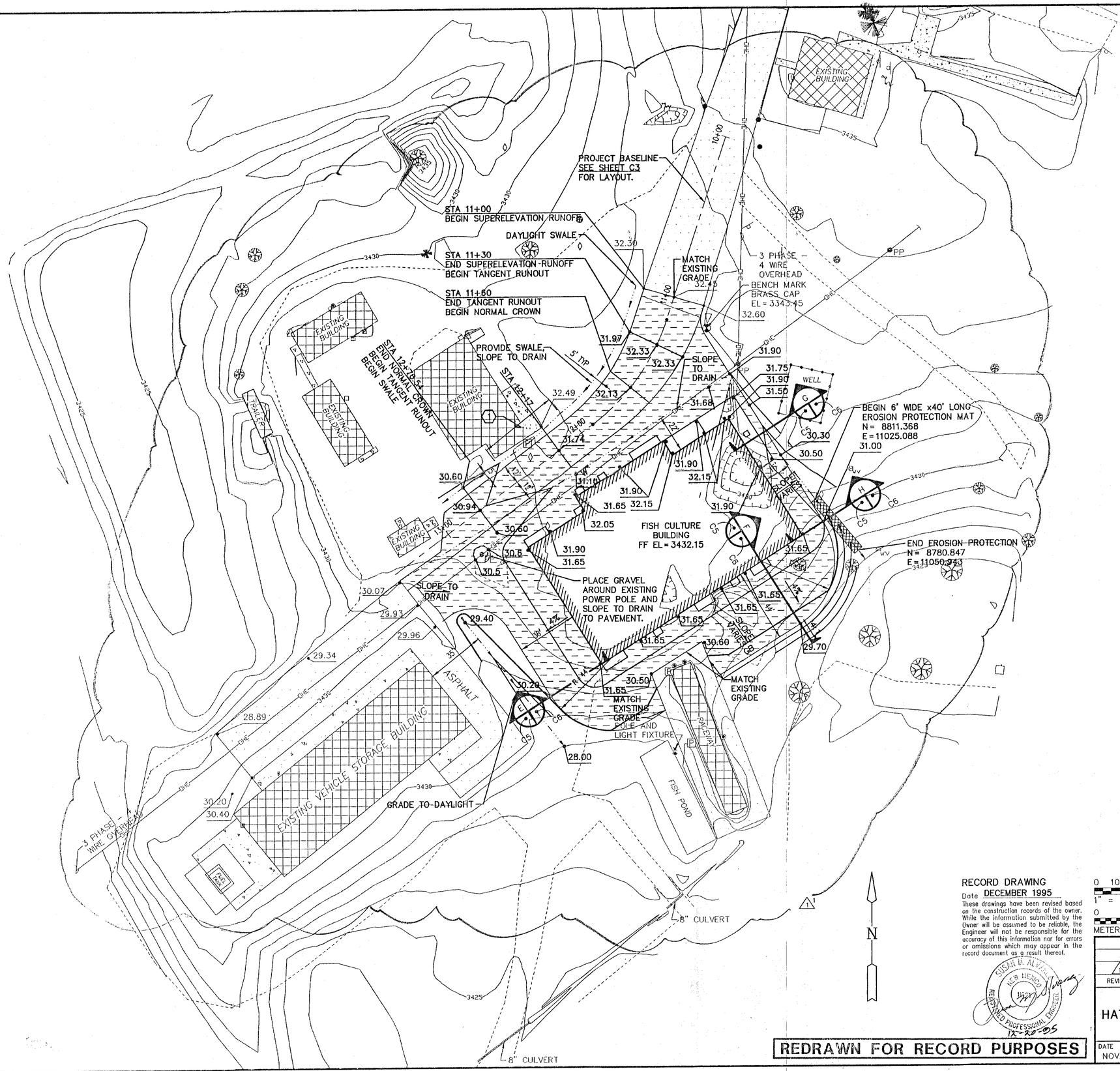

GENERAL NOTES

1. MINIMUM SWALE SLOPE = 0.5%.
2. ALL SPOT ELEVATIONS ARE PLUS 3400 FEET OF ELEVATION.
3. GRADE BASE COURSE MINIMUM OF 4% SLOPE AWAY FROM NEW BUILDINGS FOR MINIMUM OF 10 FEET.
4. SEE SHEETS S1 AND S3 FOR CONCRETE PAD DETAILS.
5. SEED ALL AREAS DISTURBED BY CONSTRUCTION AND NOT DESIGNATED FOR GRAVEL OR ASPHALT SURFACE.
6. DO NOT DISTURB THE BRASS CAP BENCHMARK.
7. SECTIONS J, K, N, P AND R LOCATED BY STATION, SEE SHEET C6.
8. REGRADE AREA OF ABSORPTION FIELD TO ROUGHLY MATCH THR EXISTING GRADE AND TO DRAIN TO THE NORTHWEST AND WEST. PROVIDE A MINIUM CROSS SLOPE OF 1%.

KEYED NOTES

1 LOCATE SWALE MIDWAY BETWEEN EDGE OF PAVEMENT SECTION AND EXISTING FACE OF BUILDING.

LEGEND

NEW	EXISTING	
31.85	31.85	SPOT ELEVATION
3430	3430	CONTOUR (5' INTERVAL)
		CONTOUR (1' INTERVAL)
		BUILDING
		GRAVEL LIMIT
		ASPHALT PAVEMENT
		GRAVEL SURFACING (BASE BID) OR ASPHALTIC CONCRETE PAVING (ADDITIVE ALTERNATE)
OHE	OHE	OVERHEAD ELECTRIC LINES
PP		POWER POLE
		POLE AND LIGHT FIXTURE
P		UTILITY BOX
		FENCE
		SIGN
		TEST HOLE LOCATION
		CONCRETE PADS
		GEOTEXTILE EROSION CONTROL MAT

RECORD DRAWING
Date DECEMBER 1995
These drawings have been revised based on the construction records of the owner. While the information submitted by the Owner will be assumed to be reliable, the Engineer will not be responsible for the accuracy of this information nor for errors or omissions which may appear in the record document as a result thereof.

SUSAN M. ALVAREZ
NEW MEXICO
REGISTERED PROFESSIONAL ENGINEER
12-20-95

0 10' 30' 60' 90'
1" = 30'-0" (A.F.S.)
0 5 10 20 30
METERS (A.F.S.)

30/90024.31CD1/DEXGRAD/12-15-95/FKP

REVISION	STATUS	DATE	DESCRIPTION	BY
3	AS-BUILT	12/95	RECORD DRAWING	GN

DEXTER NATIONAL FISH HATCHERY AND TECHNOLOGY CENTER – PHASE I

SITE GRADING PLAN

C 5

DATE	DESIGNED	DRAWN	CHECKED	DRAWING NO.
NOV. 1993	GN	KHK	SMA	S.E.C. – NM – 133 – 106.0

REDRAWN FOR RECORD PURPOSES

LEEDSHILL-HERKENHOFF, INC.
ALBUQUERQUE ENGINEERS SANTA FE ARCHITECTS SAN DIEGO

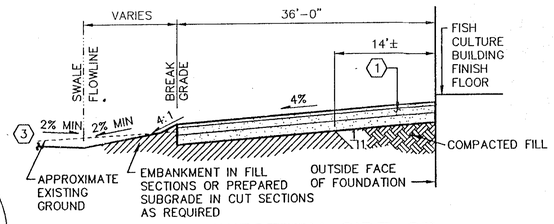

SOUTHWESTERN SIDE OF FISH CULTURE BUILDING

E — C5 C6

SCALE: HORIZ 1" = 10'
VERT 1" = 5'

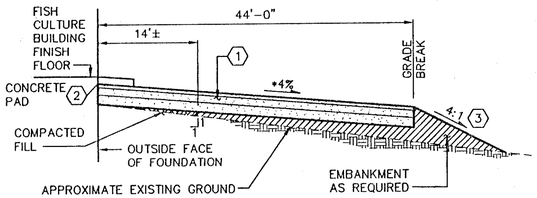

*BEGIN TO WARP SLOPE WITHIN 10' OF EXISTING FISH RACEWAY PAVEMENT TO MATCH PAVEMENT GRADE.
MAINTAIN MINIMUM 4% SLOPE AT LEAST 10' AWAY FROM BUILDING.

SOUTHEASTERN SIDE OF FISH CULTURE BUILDING

F — C5 C6

SCALE: HORIZ 1" = 10'
VERT 1" = 5'

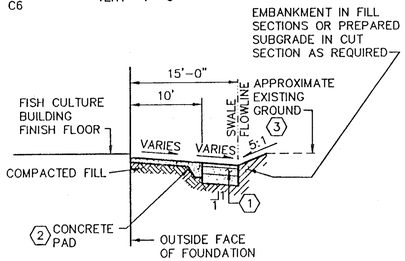

NORTHEASTERN SIDE OF FISH CULTURE BUILDING

C — C5 C6

SCALE: HORIZ 1" = 10'
VERT 1" = 5'

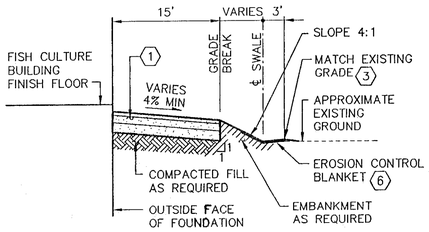

SWALE ON NORTHEASTERN SIDE OF FISH CULTURE BUILDING

H — C5 C6

SCALE: HORIZ 1" = 10'
VERT 1" = 5'

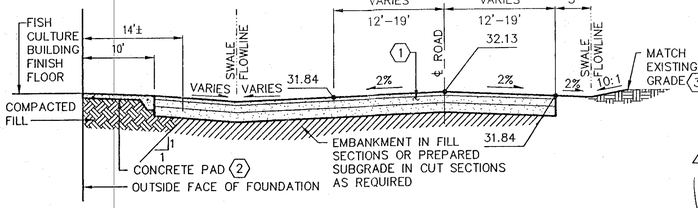

℄ STA 11+60

J — C5 C6

SCALE: HORIZ 1" = 10'
VERT 1" = 5'

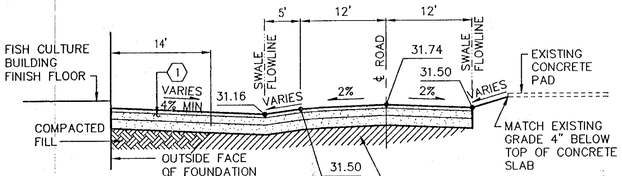

℄ STA 12+17

K — C5 C6

SCALE: HORIZ 1" = 10'
VERT 1" = 5'

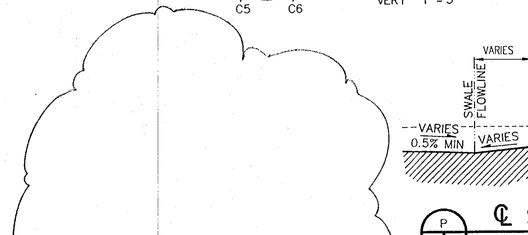

℄ STA 12+76.54

N — C5 C6

SCALE: HORIZ 1" = 10'
VERT 1" = 5'

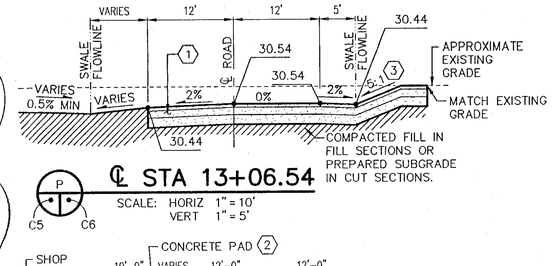

℄ STA 13+06.54

P — C5 C6

SCALE: HORIZ 1" = 10'
VERT 1" = 5'

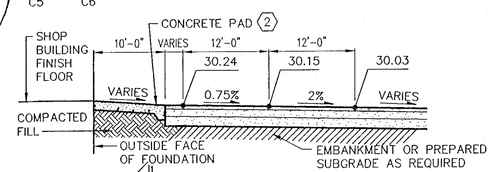

℄ STA 13+35.24

R — C5 C6

SCALE: HORIZ 1" = 10'
VERT 1" = 5'

GENERAL NOTES

1. FOR ELEVATIONS NOT SHOWN SEE SITE GRADING PLAN SHEET C5.

KEYED NOTES

1. SEE SHEET C7 FOR PAVEMENT SECTION.
2. SEE STRUCTURAL DRAWINGS FOR CONCRETE PAD INFORMATION.
3. CONTINUE SLOPE UNTIL IT MEETS EXISTING GROUND.
4. NOT USED.
5. NOT USED.
6. INSTALL PER MANUFACTURER'S RECOMMENDATIONS FOR AREA SHOWN ON SITE GRADING PLAN, SHEET C5.
7. NOT USED.
8. NOT USED.

LEGEND

COMPACTED FILL, CONSTRUCT IN ACCORDANCE WITH SPECIFICATION 02221

EMBANKMENT, CONSTRUCT IN ACCORDANCE WITH SPECIFICATION 02200

RECORD DRAWING

Date DECEMBR 1995

These drawings have been revised based on the construction records of the owner. While the information submitted by the Owner will be assumed to be reliable, the Engineer will not be responsible for the accuracy of this information nor for errors or omissions which may appear in the record document as a result thereof.

0 2.5' 5' 10' 15'
1" = 5'-0" (A.F.S.)
0 1 2 3 4 5
METERS (A.F.S.)
0 5' 10' 20' 30'
1" = 10'-0" (A.F.S.)
0 5 10
METERS (A.F.S.)

SUSAN M. ALVAREZ NEW MEXICO REGISTERED PROFESSIONAL ENGINEER 12-20-95

REDRAWN FOR RECORD PURPOSES

10/90024.31CD3/DXSECS/12-05-95/FKP

REVISION	STATUS	DATE	DESCRIPTION	BY
4	AS-BUILT	12/95	RECORD DRAWING	GN

DEXTER NATIONAL FISH HATCHERY AND TECHNOLOGY CENTER – PHASE 1

TYPICAL CROSS SECTIONS

C 6

DATE	DESIGNED	DRAWN	CHECKED	DRAWING NO.
NOV. 1993	GN	TJL	SMA	S.E.C. – NM – 133 – 107.0

LEEDSHILL-HERKENHOFF, INC.
ENGINEERS SANTA FE ALBUQUERQUE ARCHITECTS SAN DIEGO

SHEET 8 OF 64

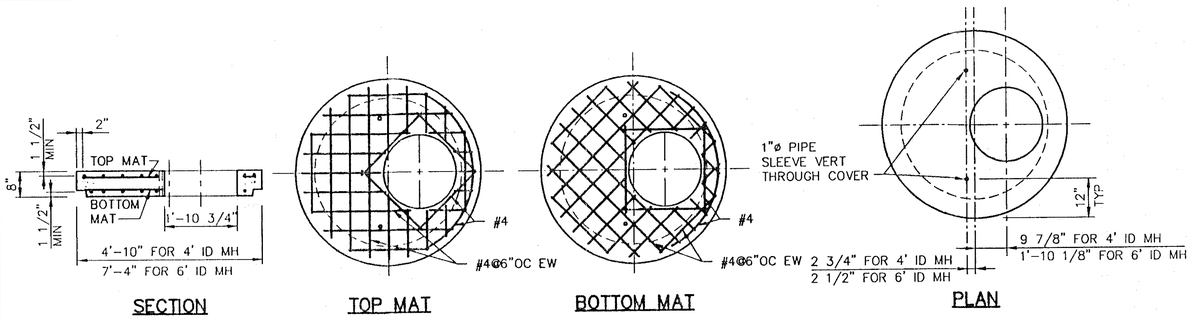

SECTION TOP MAT BOTTOM MAT PLAN

CONCRETE MH COVER TYPE "A" MANHOLE

1 C7 C7

SCALE: 1/2"=1'-0"

MANHOLE NOTES

1. SEAL ALL PRECAST MANHOLE JOINTS WITH A CONTINUOUS BEAD OF MASTIC GASKET. USE NON-SHRINK GROUT FOR FILLETS, TO SEAL PENETRATIONS, AND TO FINISH INTERIOR AND EXTERIOR PRECAST JOINTS.
2. POSITION MANHOLE OPENING OVER THE UPSTREAM SIDE OF THE MAINLINE.
3. CORE DRILL ALL MANHOLE PENETRATIONS WHICH ARE NOT FACTORY PREFORMED.
4. USE WATER STOP RUBBER RING ON ALL PIPES AT CENTER OF GROUT FILL TO SEAL PIPE PENETRATIONS.

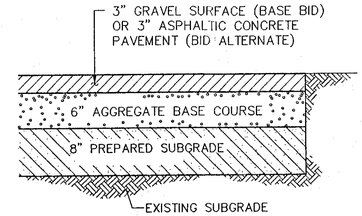

6 C6 C7

PAVEMENT SECTION

NOT TO SCALE

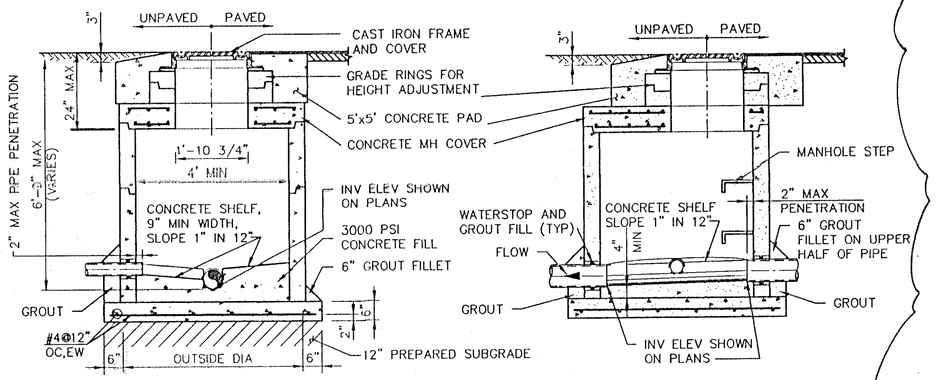

TYPE "A" PRECAST CONCRETE MANHOLE

2 C4 C7

SCALE: 1/2"=1'-0"

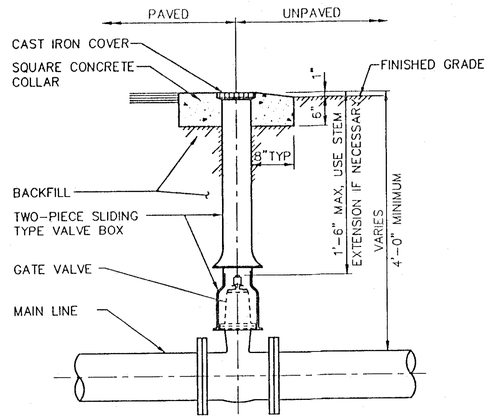

TYPICAL VALVE AND VALVE BOX DETAIL

4 C4 C7

NOT TO SCALE

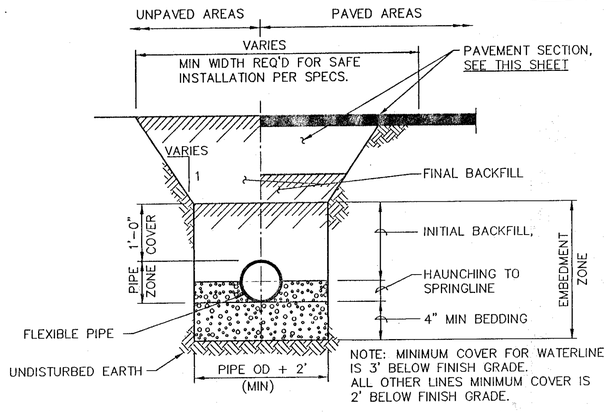

TYPICAL FLEXIBLE PIPE TRENCHING AND BEDDING SECTION

5 C4 C7

NOT TO SCALE

RECORD DRAWING

Date DECEMBER 1995

These drawings have been revised based on the construction records of the owner. While the information submitted by the Owner will be assumed to be reliable, the Engineer will not be responsible for the accuracy of this information nor for errors or omissions which may appear in the record document as a result thereof.

SUSAN M. ALVAREZ NEW MEXICO 9339 REGISTERED PROFESSIONAL ENGINEER 12-20-95

REDRAWN FOR RECORD PURPOSES

0 1' 2' 4' 6'
1/2" = 1'-0" (A.F.S.)
0 .2 .4 .6 .8 1 2
METERS (A.F.S.)

24/90024.31CD3/DXDTONE/12-15-95/FKP

REVISION	STATUS	DATE	DESCRIPTION	BY
1 2	AS-BUILT	12/95	RECORD DRAWING	GN

DEXTER NATIONAL FISH HATCHERY AND TECHNOLOGY CENTER – PHASE I

DETAILS

C 7

DATE	DESIGNED	DRAWN	CHECKED	DRAWING NO.
NOV. 1993	GN	KHK	SMA	S.E.C. – NM – 133 – 108.0

LEEDSHILL-HERKENHOFF, INC. ENGINEERS SANTA FE ALBUQUERQUE SAN DIEGO ARCHITECTS

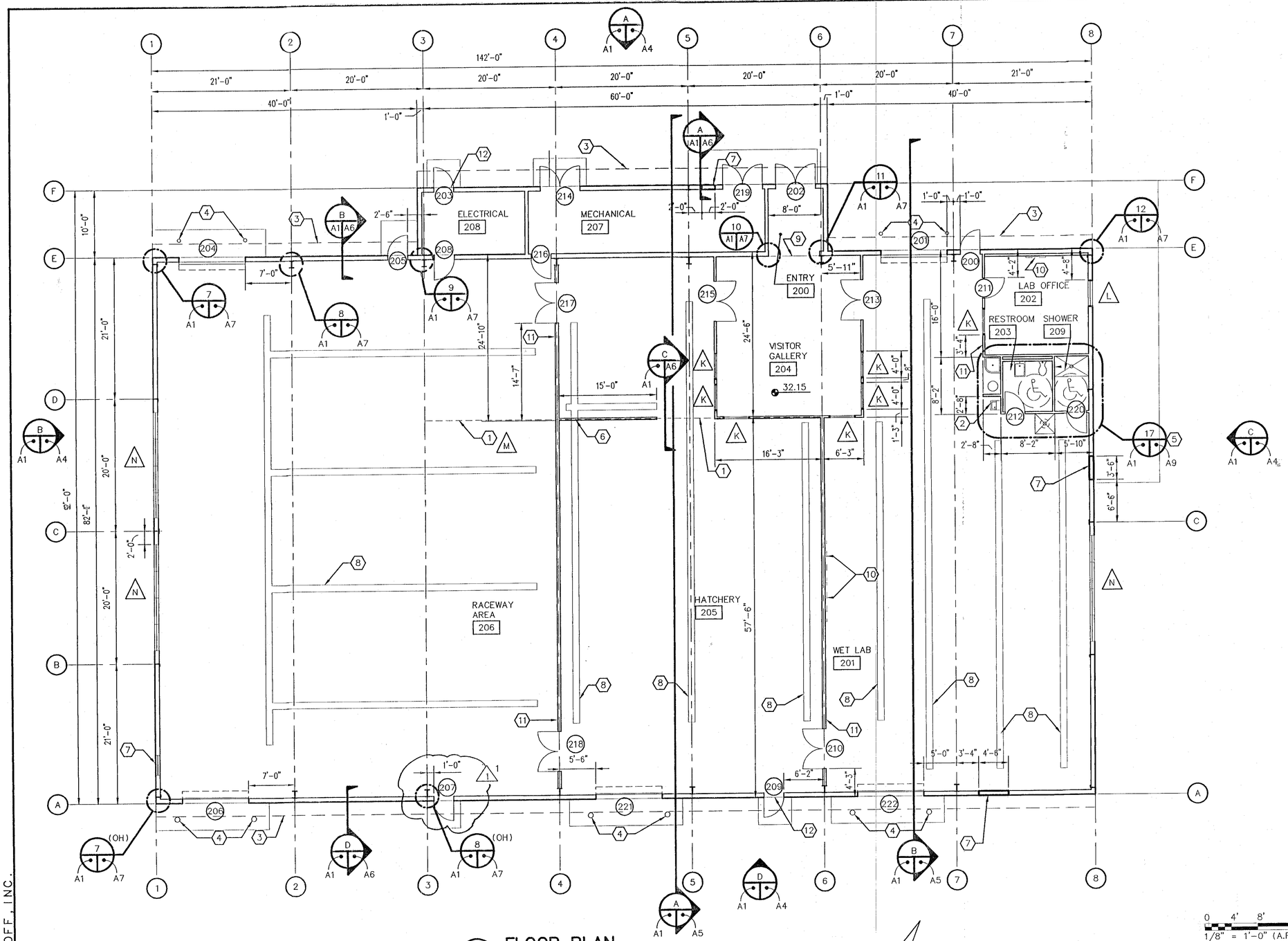

FLOOR PLAN

SCALE : 1/8" = 1'-0"

KEYED NOTES

1. CLERESTORY WINDOWS ARE TYPE "M"
2. ELECTRIC WATER COOLER
3. LINE OF ROOF OVERHANG
4. 4" PIPE BOLLARD (TYP. AT EACH EXTERIOR COILING DOOR SEE STRUCTURAL) SEE SHEET C-7
5. SEE ENLARGED PLAN OF THIS AREA FOR DETAILED REQUIREMENTS AND DIMENSIONS
6. INSTALL 1/4" CHECKERED STEEL PLATE @ THIS LOCATION TO EXTEND 6" MIN. BEYOND WALL, EACH SIDE
7. LOUVER, SEE MECHANICAL
8. TRENCH, SEE STRUCTURAL
9. TRANSITION: ENTRY MAT FROM HERE TO DOOR 202, VCT FROM HERE NORTH
10. MARKER BOARD
11. FIRE EXTINGUISHER
12. LOUVER ABOVE DOOR, SEE MECHANICAL

LEGEND

32.15 = 3432.15' ABOVE MEAN SEA LEVEL NOMINAL SEE SHEET S-1 FOR T.O.C. ELEVATIONS

20'-6" = ELEVATION ABOVE FINISHED FLOOR (AFF)

0 4' 8' 16' 24'
1/8" = 1'-0" (A.F.S.)
0 1 2 3 4 5 6 7 8
METERS (A.F.S.)

FP2B3A

REDRAWN FOR RECORD PURPOSES

STATE OF NEW MEXICO
STEVEN J. KOFFMAN
NO. 1232
12-20-95
REGISTERED ARCHITECT

RECORD DRAWING
Date DECEMBER 1995
These drawings have been revised based on the construction records of the owner. While the information submitted by the Owner will be assumed to be reliable, the Engineer will not be responsible for the accuracy of this information nor for errors or omissions which may appear in the record document as a result thereof.

96/9002431AD1/DEXFP2/12-13-95/FKP

REVISION	STATUS	DATE	DESCRIPTION	BY
1	AS-BUILT	12/95	RECORD DRAWING	DLJ

DEXTER NATIONAL FISH HATCHERY AND TECHNOLOGY CENTER – PHASE I

FISH CULTURE BUILDING FLOOR PLAN

A 1

DATE	DESIGNED	DRAWN	CHECKED	DRAWING NO.
NOV. 1993	STK	FKP	DLJ	S.E.C. – NM – 133 – 110.0

LEEDSHILL-HERKENHOFF, INC.
ENGINEERS SANTA FE ALBUQUERQUE ARCHITECTS SAN DIEGO

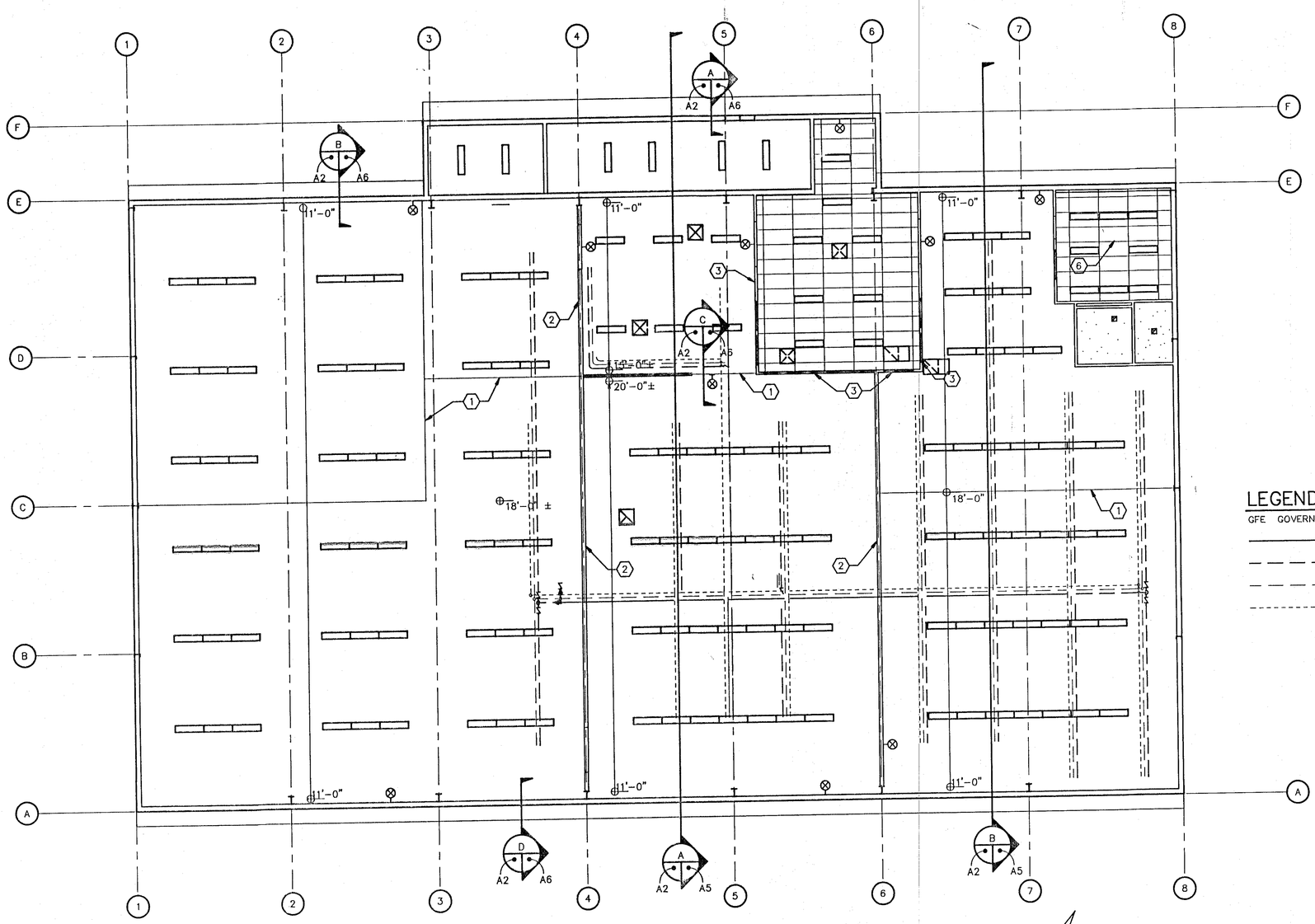

KEYED NOTES

1. LINE OF CLERESTORY ABOVE
2. 6"x20 GA. METAL STUD PARTITION WALLS FLOOR TO ROOF STRUCTURE WITH PLYWOOD WALL PANELS EACH FOR CONNECTION AT STRUCTURE ABOVE SEE 3/A2
3. 4" METAL STUD PARTITION W/ 5/8" PLYWOOD WALL PANELS OUTSIDE, 5/8" GYP. BD. OTHER SIDE. FOR CONNECTION AT STRUCTURE SEE 2/A2 AND 4/A2 (SIM.)
4. 4" METAL STUD AT 16" O.C. W/TOP AND BOTTOM TRACK
5. 5/8" TYPE "X" GYPSUM BOARD, TAPE TEXTURE, FINISH
6. SUSPENDED ACOUSTICAL CEILING SYSTEM
7. ∠ 2" x 2" x .125" CONTINUOUS
8. INTERIOR METAL DECK PANEL
9. STANDING SEAM METAL ROOF
10. SLIP TRACK FASTENED TO CLIP ANGLES OR DECK. FIT PARTITION AND PARTITION TRACK INTO SLIP TRACK WITHOUT FASTENERS. (CLIP ANGLES AT 24" O.C.)
11. PLYWOOD WALL PANEL
12. STEEL BEAM
13. 6" METAL STUDS @ 16" O.C.

LEGEND

GFE GOVERNMENT FURNISHED EQUIPMENT

- 8" PVC SCHEDULE 40
- 6" PVC SCHEDULE 40
- 2" PVC SCHEDULE 40
- ½" OXYGEN LINE
- 2x4 SUSPENDED ACOUSTIC CEILING
- SUSPENDED GYP. BD. CEILING
- 1x4 LIGHTING FIXTURE
- HVAC SUPPLY GRILLE
- HVAC RETURN GRILLE
- EXHAUST GRILLE
- HEIGHT ABOVE FINISH FLOOR (A.F.F.)
- EXIT LIGHT

1 REFLECTED CEILING PLAN

SCALE : 1/8" = 1'-0"

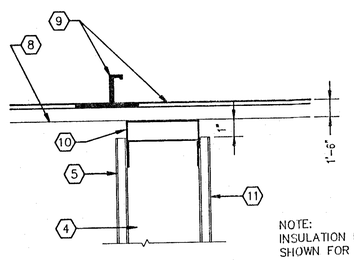

NOTE:
INSULATION NOT
SHOWN FOR CLARITY

2 SLIP-FIT DETAIL

SCALE : 3" = 1'-0"

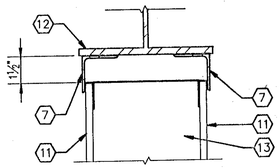

3 SLIP FIT DETAIL

SCALE : 3" = 1'-0"

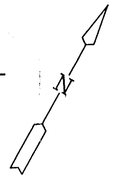

0 4' 8' 16' 24'
1/8" = 1'-0" (A.F.S.)

0 1 2 3 4 5 6 7 8
METERS (A.F.S.)

0 3" 6" 9" 1'
3" = 1'-0" (A.F.S.)

0 .10 .20 .30
METERS (A.F.S.)

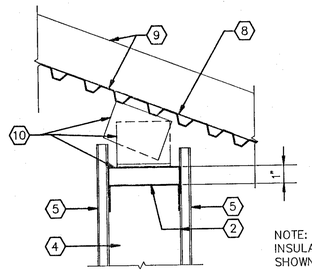

NOTE:
INSULATION NOT
SHOWN FOR CLARITY

4 SLIP-FIT DETAIL

SCALE : 3" = 1'-0"

RECORD DRAWING
Date DECEMBER 1995
These drawings have been revised based on the construction records of the owner. While the information submitted by the Owner will be assumed to be reliable, the Engineer will not be responsible for the accuracy of this information nor for errors or omissions which may appear in the record document as a result thereof.

STATE OF NEW MEXICO
Steven K. Koffman
KOFFMAN
NO. 1232
11-19-93
REGISTERED ARCHITECT

96/9002431AD1/DEXRC2/11-15-93/FKP

FP2B3A

REVISION	STATUS	DATE	DESCRIPTION	BY

DEXTER NATIONAL FISH HATCHERY AND TECHNOLOGY CENTER – PHASE I

FISH CULTURE BUILDING
REFLECTED CEILING PLAN
AND DETAILS

DATE	DESIGNED	DRAWN	CHECKED	DRAWING NO.
NOV. 1993	STK	FKP	DLJ	S.E.C. – NM – 133 – 111.0

A
2

SHEET 12 OF 64

LEEDSHILL-HERKENHOFF, INC.
ARCHITECTS
SAN DIEGO
SANTA FE
ALBUQUERQUE
ENGINEERS

KEYED NOTES ⬡

1. LINE OF WALL BELOW
2. LINE OF CLERESTORY WINDOWS BELOW
3. STANDING SEAM METAL ROOF
4. UPPER ROOF EDGE
5. RIDGE CAP
6. LIGHTNING PROTECTION (⊙ TYPICAL) SEE ELECTRICAL
7. ROOF VENT (HVAC)

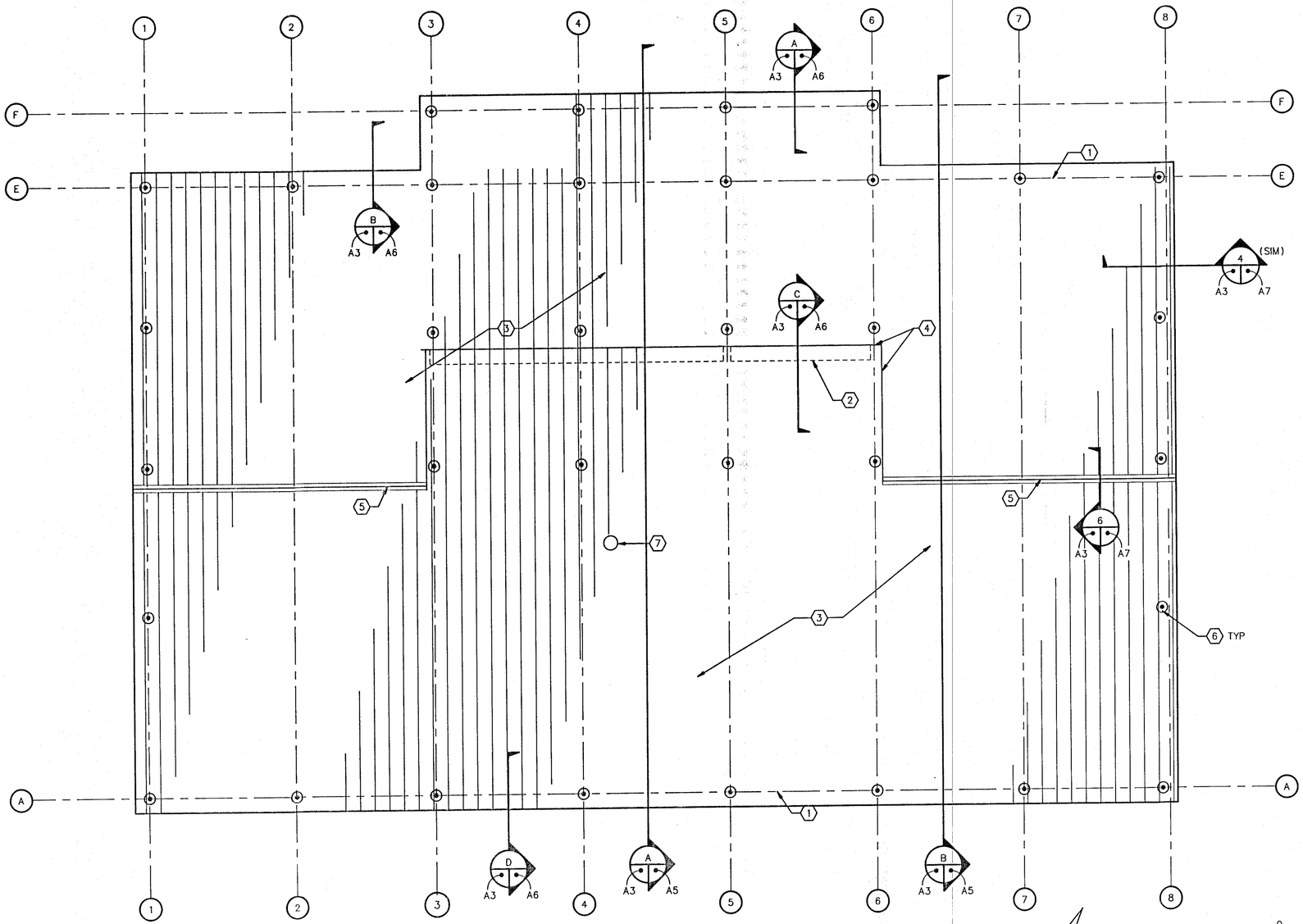

1 ROOF PLAN
SCALE : 1/8" = 1'-0"

0 4' 8' 16' 24'
1/8" = 1'-0" (A.F.S.)
0 1 2 3 4 5 6 7 8
METERS (A.F.S.)

RECORD DRAWING
Date DECEMBER 1995
These drawings have been revised based on the construction records of the owner. While the information submitted by the Owner will be assumed to be reliable, the Engineer will not be responsible for the accuracy of this information nor for errors or omissions which may appear in the record document as a result thereof.

96/9002431AD1/DEXRP2/11-15-93/FKP

STATE OF NEW MEXICO
STEVEN F. KOFFMAN
NO. 1232
11-19-93
REGISTERED ARCHITECT

REVISION	STATUS	DATE	DESCRIPTION	BY

DEXTER NATIONAL FISH HATCHERY AND TECHNOLOGY CENTER – PHASE I

FISH CULTURE BUILDING ROOF PLAN

DATE	DESIGNED	DRAWN	CHECKED	DRAWING NO.
NOV. 1993	STK	FKP	DLJ	S.E.C. – NM – 133 – 112.0

A 3

SHEET 13 OF 64

LEEDSHILL-HERKENHOFF, INC.
ENGINEERS ALBUQUERQUE
ARCHITECTS SANTA FE SAN DIEGO

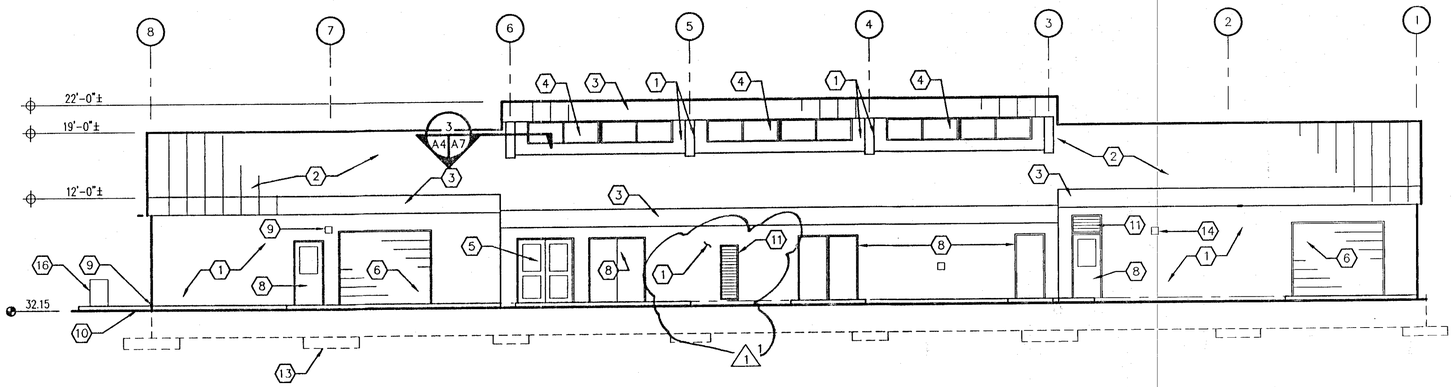

NORTH ELEVATION

SCALE : 1/8" = 1'-0"

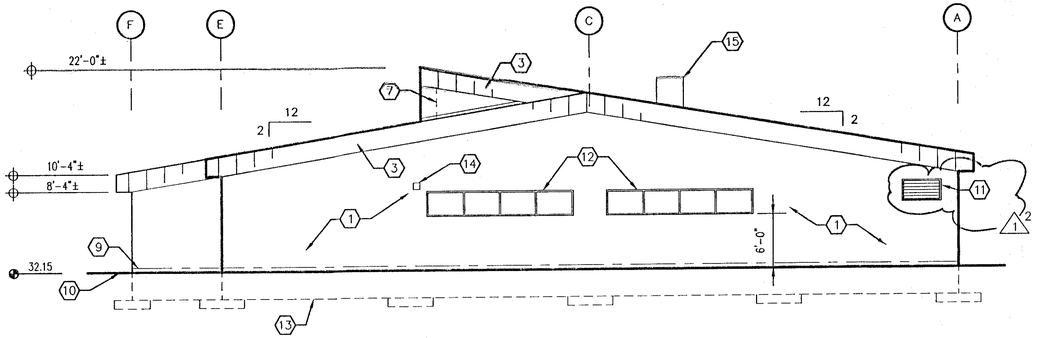

WEST ELEVATION

SCALE : 1/8" = 1'-0"

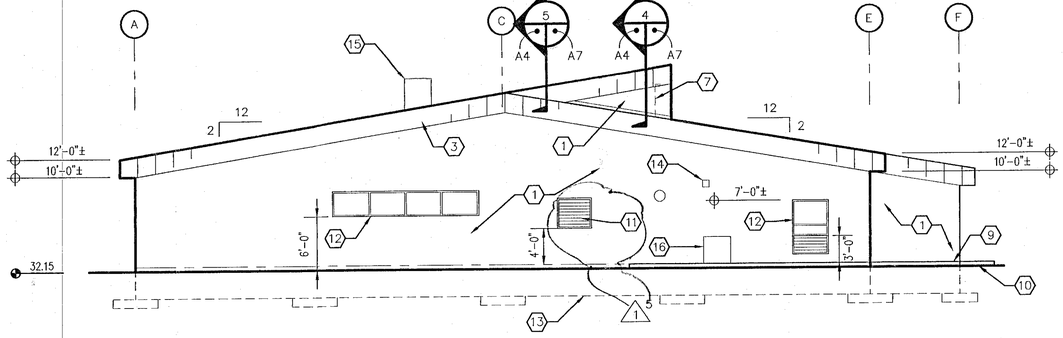

EAST ELEVATION

SCALE : 1/8" = 1'-0"

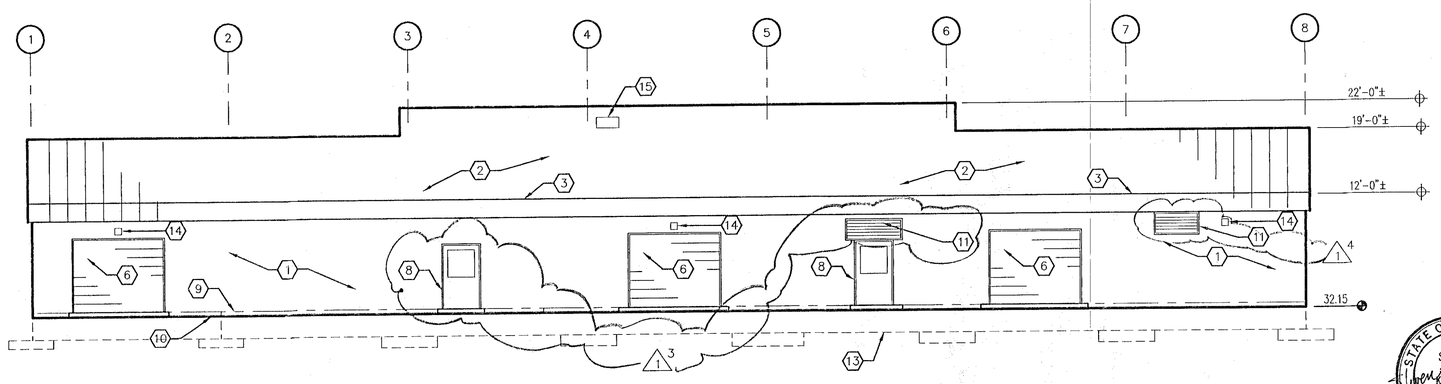

SOUTH ELEVATION

SCALE : 1/8" = 1'-0"

KEYED NOTES

1. METAL WALL PANEL
2. STANDING SEAM METAL ROOF SYSTEM
3. TURN-DOWN STANDING SEAM METAL FASCIA
4. ALUMINUM CLERESTORY WINDOWS
5. ALUMINUM STOREFRONT ENTRY DOORS
6. ALUMINUM OVERHEAD COILING DOORS
7. LINE OF CLERESTORY BEYOND
8. HOLLOW METAL DOOR
9. FINISH FLOOR
10. FINISH GRADE
11. LOUVER. FOR DETAIL SEE 4 & 5/A9
12. WINDOW(S)
13. LINE OF FOUNDATION
14. EXTERIOR LIGHTING
15. EXHAUST FAN
16. CHILLER

LEGEND

32.15 = 3432.15' ABOVE MEAN SEA LEVEL

20'-6" = ELEVATION ABOVE FINISHED FLOOR (AFF)

0 4' 8' 16' 24'
1/8" = 1'-0" (A.F.S.)
0 1 2 3 4 5 6 7 8
METERS (A.F.S.)

REDRAWN FOR RECORD PURPOSES

STATE OF NEW MEXICO
STEVEN T. KOFFMAN
NO. 1232
12-20-95
REGISTERED ARCHITECT

RECORD DRAWING
Date DECEMBER 1995
These drawings have been revised based on the construction records of the owner. While the information submitted by the Owner will be assumed to be reliable, the Engineer will not be responsible for the accuracy of this information nor for errors or omissions which may appear in the record document as a result thereof.

96/900243.1AD1/DEXEL2/12-13-95/FKP

REVISION	STATUS	DATE	DESCRIPTION	BY
5	AS-BUILT	12/95	RECORD DRAWING	DLJ

DEXTER NATIONAL FISH HATCHERY AND TECHNOLOGY CENTER - PHASE I

FISH CULTURE BUILDING ELEVATIONS

DATE	DESIGNED	DRAWN	CHECKED	DRAWING NO.
NOV. 1993	STK	FKP	DLJ	S.E.C. - NM - 133 - 113.0

A 4

LEEDSHILL-HERKENHOFF, INC.
ENGINEERS SANTA FE ALBUQUERQUE ARCHITECTS SAN DIEGO

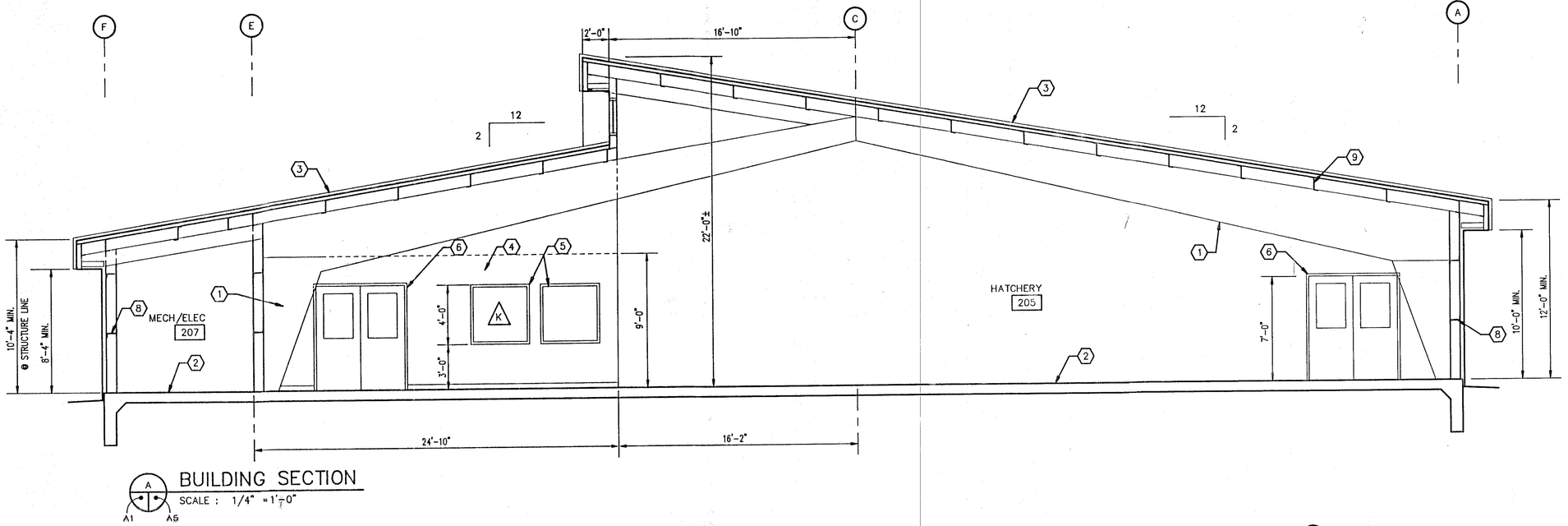

BUILDING SECTION

SCALE : 1/4" = 1'-0"

A1 A5

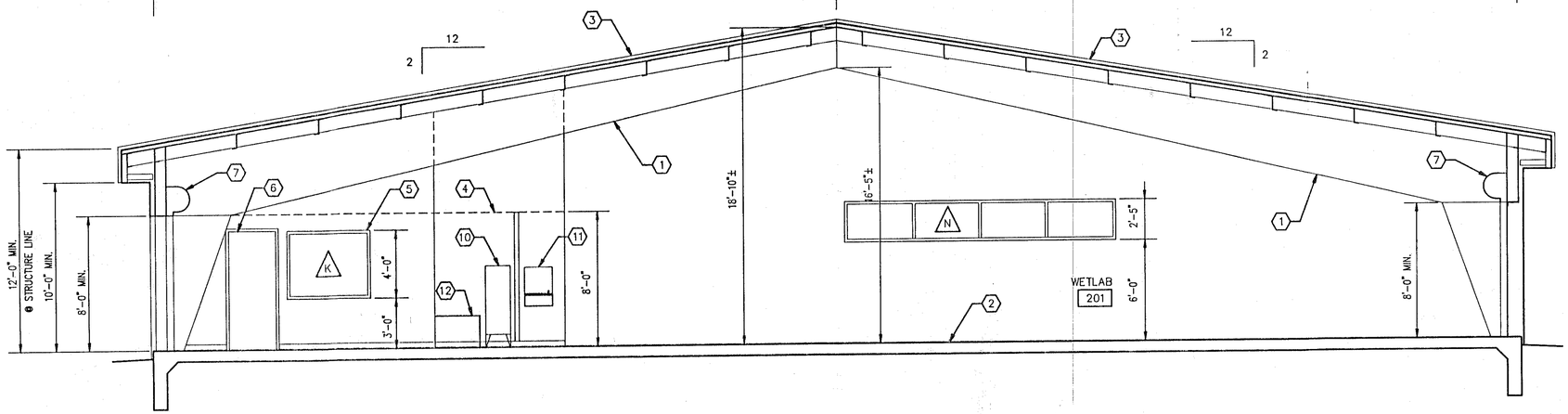

BUILDING SECTION

SCALE : 1/4" = 1'-0"

B A1 A5

GENERAL NOTES

A PIPING HANGERS AND FISH CULTURE PIPING NOT SHOWN. SEE SHEET W1.

KEYED NOTES

1. STRUCTURE
2. FINISH FLOOR
3. STANDING SEAM ROOF SYSTEM
4. CEILING BEYOND
5. WINDOW
6. DOOR
7. OVERHEAD DOOR
8. GIRT
9. PURLIN
10. HOT WATER HEATER
11. ELECTRIC WATER COOLER
12. MOP SINK

0 2' 4' 8' 12'

1/4" = 1'-0" (A.F.S.)

0 1 2 3 4

METERS (A.F.S.)

RECORD DRAWING

Date DECEMBER 1995

These drawings have been revised based on the construction records of the owner. While the information submitted by the Owner will be assumed to be reliable, the Engineer will not be responsible for the accuracy of this information nor for errors or omissions which may appear in the record document as a result thereof.

STATE OF NEW MEXICO
STEVEN KOFFMAN
NO. 1232
REGISTERED ARCHITECT
11-19-93

48/9002431AD1/DEXBS2/11-15-93/FKP

REVISION	STATUS	DATE	DESCRIPTION	BY
1	AS-BUILT	12/95	RECORD DRAWING	DLJ

DEXTER NATIONAL FISH HATCHERY AND TECHNOLOGY CENTER – PHASE I

FISH CULTURE BUILDING
BUILDING SECTIONS

A 5

DATE	DESIGNED	DRAWN	CHECKED	DRAWING NO.
NOV. 1993	STK	FKP	DLJ	S.E.C. – NM – 133 – 114.0

SHEET 15 OF 64

LEEDSHILL-HERKENHOFF, INC.
ENGINEERS ALBUQUERQUE SANTA FE
ARCHITECTS SAN DIEGO

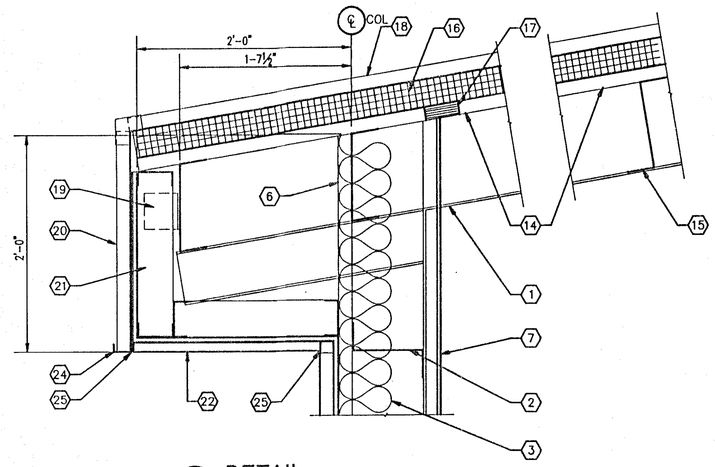

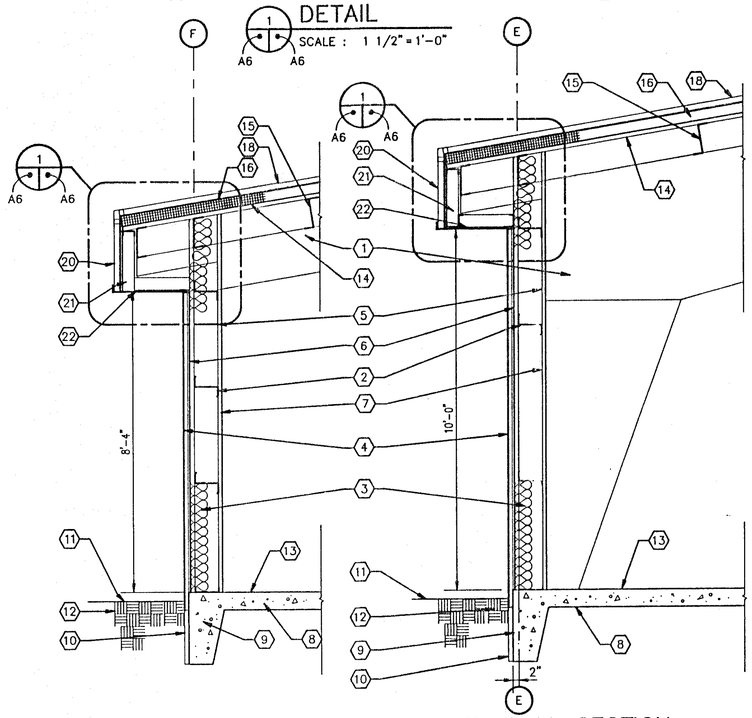

A WALL SECTION
SCALE : 1/2" = 1'-0"

B WALL SECTION
SCALE : 1/2" = 1'-0"

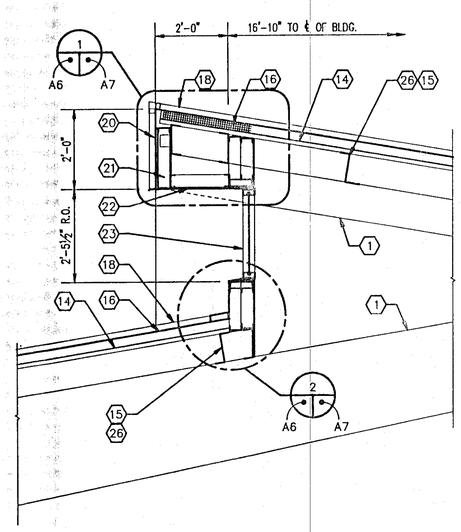

C WALL SECTION
SCALE : 1/2" = 1'-0"

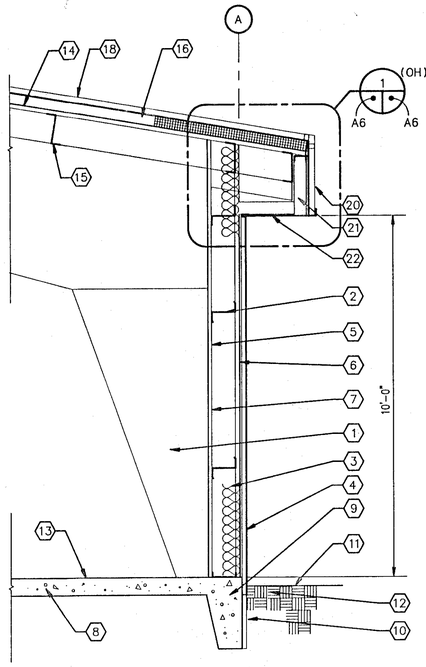

D WALL SECTION
SCALE : 1/2" = 1'-0"

KEYED NOTES ⬡

1. RIGID FRAME STEEL STRUCTURE
2. 8" "Z" GIRT STRUCTURAL FRAMING @ 4'-0" O.C. MAX.
3. 6" BATT INSULATION R-19
4. METAL BUILDING PANEL
5. VAPOR BARRIER
6. 1 ½" METAL FURRING CHANNEL @ 16" O.C.
7. 5/8" PLYWOOD '. PANEL OVER 1 ½" METAL FURRING CHANNEL
8. CONCRETE FLOOR SLAB
9. CONCRETE TURN-DOWN EDGE
10. PERIMETER INSULATION
11. FINISH GRADE
12. COMPACTED SUBGRADE
13. FINISH FLOOR
14. INTERIOR METAL DECK PANEL CEILING
15. PURLIN
16. 3" RIGID URETHANE INSULATION R-25
17. NEOPRENE CLOSURE
18. STANDING SEAM METAL ROOF
19. CLIP ∠ @ EVERY OTHER STUD
20. METAL ROOF TURN-DOWN FASCIA ON 5/8" GYP. SHEATHING
21. 4"x20 GA. METAL STUD FRAMING @ 16" O.C.
22. METAL SOFFIT
23. ALUMINUM WINDOWS W/INSULATING GLASS
24. FASCIA TRIM
25. SEALANT

RECORD DRAWING
Date DECEMBER 1995
These drawings have been revised based on the construction records of the owner. While the information submitted by the Owner will be assumed to be reliable, the Engineer will not be responsible for the accuracy of this information nor for errors or omissions which may appear in the record document as a result thereof.

0 3" 6" 9" 1' 2'
1-1/2" = 1'-0" (A.F.S.)
0 .20 .40 .60
METERS (A.F.S.)

0 1' 2' 4' 6'
1/2" = 1'-0" (A.F.S.)
0 .2 .4 .6 .8 1 2
METERS (A.F.S.)

24/9002431AD2/DEXWS2/11-15-93/FKP

STATE OF NEW MEXICO
STEVEN R. KOFFMAN
NO. 1232
REGISTERED ARCHITECT
11-19-93

REVISION	STATUS	DATE	DESCRIPTION	BY
1	AS-BUILT	12/95	RECORD DRAWING	DLJ

DEXTER NATIONAL FISH HATCHERY AND TECHNOLOGY CENTER – PHASE I

FISH CULTURE BUILDING WALL SECTIONS

A 6

DATE	DESIGNED	DRAWN	CHECKED	DRAWING NO.
NOV. 1993	STK	FKP	DLJ	S.E.C. – NM – 133 – 115.0

LEEDSHILL-HERKENHOFF, INC. ENGINEERS SANTA FE ARCHITECTS SAN DIEGO ALBUQUERQUE

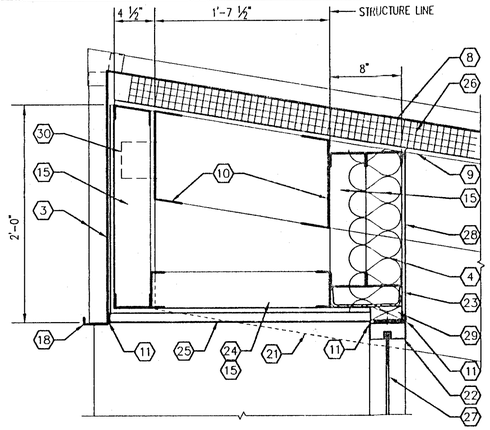

1 DETAIL
SCALE : 1 1/2" = 1'-0"
A6 A7

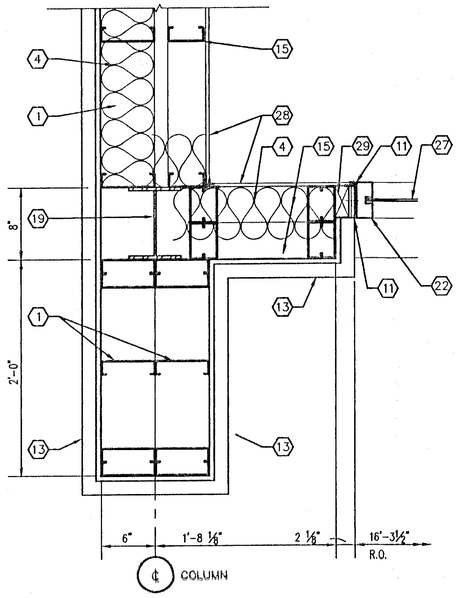

3 PLAN DETAIL
SCALE : 1 1/2" = 1'-0"
A4 A7

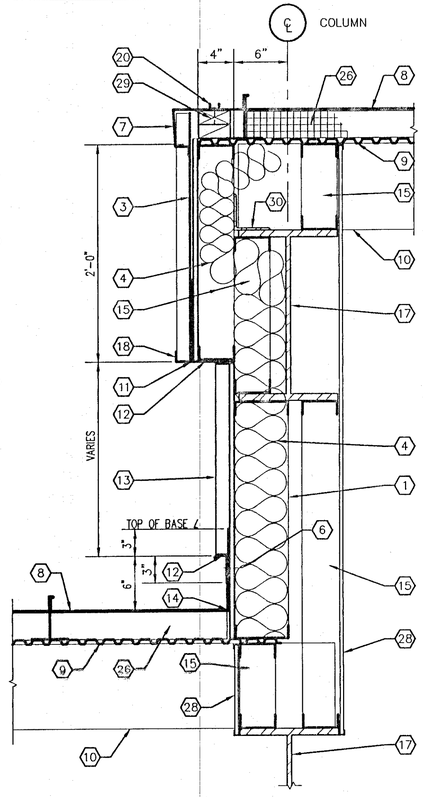

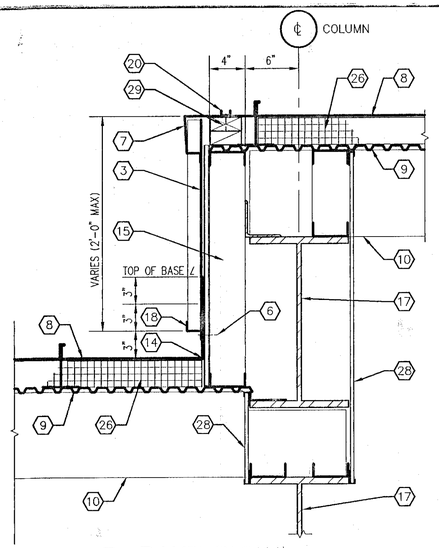

5 RAKE DETAIL
SCALE : 1 1/2" = 1'-0"
A4 A7

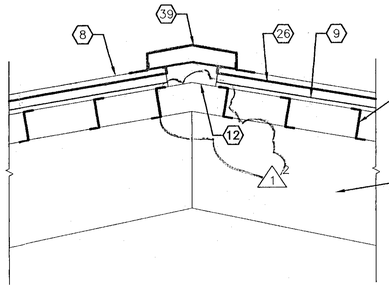

4 RAKE DETAIL
SCALE : 1 1/2" = 1'-0"
A4 A7

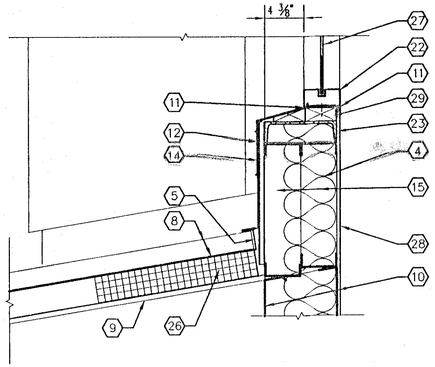

2 DETAIL
SCALE : 1 1/2" = 1'-0"
A6 A7

6 RIDGE DETAIL
SCALE : 1/2" = 1'-0"
A3 A7

KEYED NOTES

1 6" METAL STUDS @ 16" O.C.
2 NOT USED
3 STANDING SEAM METAL ROOF FASCIA
4 6" BATT INSULATION
5 SHEET METAL CLOSURE CHANNEL
6 SHEET METAL FASTENER @ 12" O.C. W/ NEOPRENE WASHER
7 GABLE TRIM
8 STANDING SEAM METAL ROOF
9 METAL DECK
10 PURLIN/EAVE STRUT BY PRE-ENGINEERED BLDG. MANUFACTURER
11 SEALANT
12 PREFINISHED METAL FLASHING
13 METAL BUILDING PANEL
14 PREFINISHED METAL BASE ANGLE FLASHING
15 4"x20 GA. METAL STUDS @ 16" O.C.
16 1 ½" FURRING CHANNELS @ 16" O.C.
17 RAKE CLOSURE
18 FASCIA TRIM
19 POST BY PRE-ENGINEERED BLDG. MANUFACTURER
20 GABLE TRIM FASTENER
21 STEEL BEAM BEYOND (HIDDEN IN FRAME & EIFS CONSTRUCTION)
22 ALUMINUM CLERESTORY WINDOW
23 STEEL GIRT BY PRE-ENGINEERED BLDG. MANUFACTURER
24 SOFFIT FRAMING
25 METAL SOFFIT
26 3" RIGID INSULATION
27 GLAZING
28 PLYWOOD WALL PANEL & FRP SYSTEM
29 WOOD BLOCKING
30 CLIP ANGLE
31 ∠ 2"x2"x0.125"
32 6" METAL STUD HEADER
33 HOLLOW METAL FRAME
34 DOOR, SEE SCHEDULE
35 STEEL GIRT, SEE STRUCTURAL
36 4" METAL STUD BRACING
37 CROSS BRACING
38 2½" METAL STUDS AT 16" O.C. TO ABOVE CEILING
39 RIDGE CAP

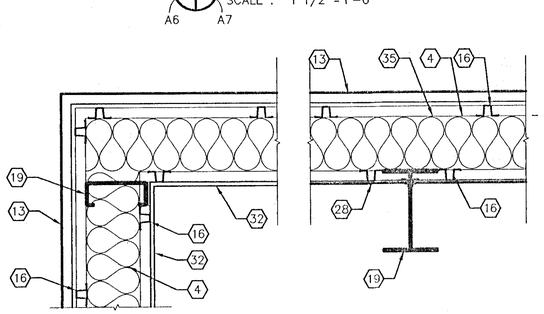

7 PLAN SECTION
SCALE: 1" = 1'-0"
A1 A7

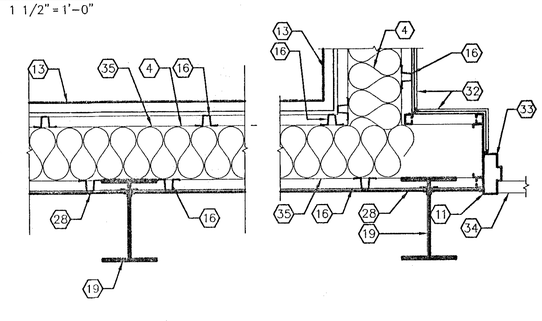

8 PLAN SECTION
SCALE: 1" = 1'-0"
A1 A7

9 PLAN SECTION
SCALE: 1" = 1'-0"
A1 A7

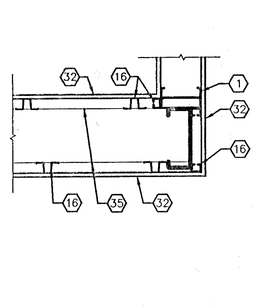

10 PLAN SECTION
SCALE: 1" = 1'-0"
A1 A7

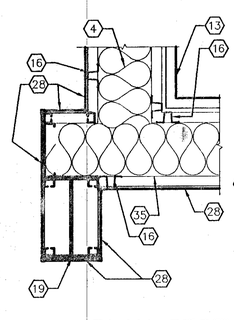

11 PLAN SECTION
SCALE: 1" = 1'-0"
A1 A7

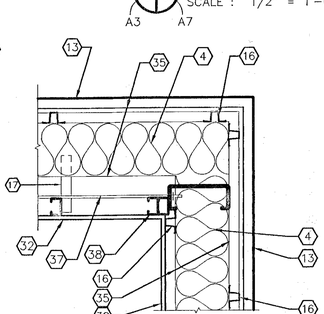

12 PLAN SECTION
SCALE: 1-½" = 1'-0"
A1 A7

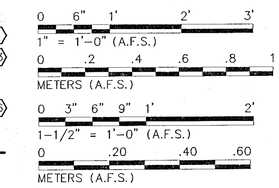

RECORD DRAWING
Date DECEMBER 1995
These drawings have been revised based on the construction records of the owner. While the information submitted by the Owner will be assumed to be reliable, the Engineer will not be responsible for the accuracy of this information nor for errors or omissions which may appear in the record document as a result thereof.

8/9002431AD1/DEXCDET/12-13-95/FKP

STATE OF NEW MEXICO
STEVEN M. KUFFMAN
NO. 1232
REGISTERED ARCHITECT
12-20-95

REDRAWN FOR RECORD PURPOSES

REVISION	STATUS	DATE	DESCRIPTION	BY
1 2	AS-BUILT	12/95	RECORD DRAWING	RER

DEXTER NATIONAL FISH HATCHERY AND TECHNOLOGY CENTER – PHASE I

FISH CULTURE BUILDING WALL/ROOF DETAILS

A 7

DATE	DESIGNED	DRAWN	CHECKED	DRAWING NO.
NOV. 1993	STK	FKP	DLJ	S.E.C. – NM – 133 – 116.0

SHEET 17 OF 64

LEEDSHILL-HERKENHOFF, INC.
ENGINEERS SANTA FE ALBUQUERQUE ARCHITECTS SAN DIEGO

INTERIOR FINISH SCHEDULE

NOTES		FLOOR						BASE			WALLS NORTH				WALLS SOUTH				WALLS EAST				WALLS WEST				CEILING			
ROOM NAME	RM. NO.	CONCRETE SEALED	VINYL COMPOSITION TILE	FIBERGLASS UNIT	ENTRY MAT	–	–	VINYL 4"	FIBERGLASS UNIT	–	GYP. BD. PAINTED	VINYL WAINSCOT	FIBERGLASS UNIT	PLYWOOD PANEL	GYP. BD. PAINTED	VINYL WAINSCOT	FIBERGLASS UNIT	PLYWOOD	GYP. BD. PAINTED	VINYL WAINSCOT	FIBERGLASS UNIT	FIBERGLASS PANEL	GYP. BD. PAINTED	VINYL WAINSCOT	FIBERGLASS UNIT	PLYWOOD	SUSPENDED ACOUSTICAL	GYP. BD. PAINTED	METAL (COATED)	HEIGHT
FISH CULTURE BUILDING																														
ENTRY	200		◎		◎			◎			◎								◎				◎				◎			9'–0"
WET LAB	201	◎						◎						◎				◎				◎				◎			◎	VAR
LAB OFFICE	202		◎					◎			◎				◎				◎				◎				◎			8'–0"
RESTROOM	203		◎					◎			◎	◎			◎				◎	◎			◎					◎		8'–0"
VISITOR GALLERY	204		◎					◎			◎				◎				◎				◎				◎			9'–0"
HATCHERY	205	◎												◎				◎				◎				◎			◎	VAR
RACEWAY AREA	206	◎												◎				◎				◎				◎			◎	VAR
MECHANICAL	207	◎						◎			◎				◎				◎				◎						◎	VAR
ELECTRICAL	208	◎						◎			◎				◎				◎				◎						◎	VAR
SHOWER	209		◎	◎				◎	◎						◎				◎		◎		◎		◎			◎		8'–0"
–	–																													
–	–																													
–	–																													
–	–																													

WINDOW SCHEDULE

MARK	SIZE W	SIZE H	ELEV.	MAT'L.	DETAILS ALL ON THIS SHEET EXCEPT AS NOTED HEAD	JAMB	SILL	GLASS TYPE	REMARKS
K	4'–0"	4'–0"	K	AL.	1	1	1	C	TEMPERED/FX
L	4'–0"	4'–6"	L	AL.	2	2	2	A	
M	4'–0"	2'–5"	M	AL.	1	5/A9	2	A	CLERESTORY/FX
N	4'–0"	2'–5"	M	AL.	1	5/A9	2	A	

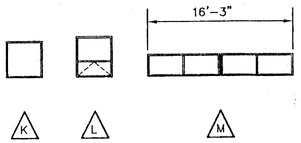

KEYED NOTES

1 5/8" TYPE "X" GYP. BD.
2 NOT USED
3 METAL PANEL
4 SUPPORT POST
5 ALUMINUM WINDOW
6 SEALANT
7 1 1/2" FURRING CHANNELS
8 5/8" PLYWOOD PANEL
9 4" METAL STUD @ 16" O.C.
10 1 1/2" CHANNELS

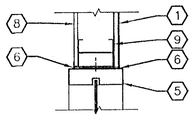

JAMB (HEAD & SILL SIM.)

1 A8 A8
SCALE : 1–1/2"=1'–0"

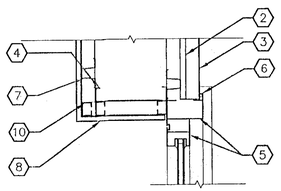

WINDOW PLAN DETAIL

2 A8 A8
SCALE : 1–1/2"=1'–0"

WINDOW TYPES (ELEVATIONS)

SCALE : 1/8"=1'–0"

WINDOW GLASS TYPES

A = DOUBLE GLAZED
EXTERIOR SURFACE 2 – BRONZE TINT
INTERIOR SURFACE 3 – LOW 'E', CLEAR
C = TEMPERED CLEAR
FX = FIXED GLASS UNIT

NOTE:

1 CONTRACTOR TO FIELD VERIFY ALL WINDOW OPENINGS PRIOR TO INSTALLATION OF WINDOW SYSTEMS.

2 CONTRACTOR TO NOTE WINDOW MULLION LAYOUT IN CONJUNCTION WITH THE METAL STUD PARTITION SYSTEM LAYOUT.

3 GLASS TYPE IN SPECIFICATIONS SEE 08800 GLAZING SCHEDULE.

4 WINDOW LITES IN DOORS AS DESCRIBED IN DOOR SCHEDULE

DOOR SCHEDULE

NO.	DOOR SIZE (1)	DOOR TYPE	DOOR MAT'L.	DOOR GLASS TYPE	DOOR NAME PLATE	FRAME TYPE	FRAME MAT'L.	FRAME DETAILS HEAD	FRAME DETAILS JAMB	FRAME DETAILS TH'HLD	LABEL (M= MIN.) (H= HOUR)	HRD'WR. (GROUP)	REMARKS (2)
FISH CULTURE BUILDING	DETAILS ARE ON SHEET A/7 EXCEPT AS NOTED												
200	3'– 0"x 7'– 0"	3	HM	W		B	HM	1	2	3		10	
201	10'– 0"x 8'– 0"	4	AL			C	STL	8	7	9		MANUF.	
202	2– 3'– 0"x 7'– 0"	1	AL	T		A	AL	12	13	3		1	
203	3'– 0"x 7'– 0"	2	HM			B	HM	1	2	3		8	
204	10'– 0"x 9'– 0"	4	AL			C	STL	8	7	9		10	
205	3'– 0"x 7'– 0"	3	HM	W		B	HM	6	2	3		10	SEE 4 & 5/A9 FOR LOUVER ABOVE DOOR
206	10'– 0"x 9'– 0"	4	AL			C	STL	8	7	9		10	
207	3'– 0"x 7'– 0"	3	HM	W		B	HM	1	2	3		10	1 HR RATED
208	3'– 0"x 7'– 0"	2	HM			B	HM	9/A7	9/A7			3	SEE 4 & 5/A9 FOR LOUVER ABOVE DOOR
209	4'– 0"x 7'– 0"	3	HM	W		B	HM	6	2	3		9	
210	2– 3'– 0"x 7'– 0"	3	HM	T		D	HM	11	11			5	
211	3'– 0"x 7'– 0"	3	HM	W		B	HM	10	10			5	
212	3'– 0"x 7'– 0"	2	HM		REST–ROOM	B	HM	10	10			9	
213	2– 3'– 0"x 7'– 0"	3	HM	T		D	HM	10	10			9	
214	2– 3'– 0"x 7'– 0"	2	HM			D	HM	1	2	3		9	
215	2– 3'– 0"x 7'– 0"	3	HM	T		D	HM	10	10			7	1 HR RATED
216	3'– 0"x 7'– 0"	2	HM			B	HM	10	10			9	
217	2– 3'– 0"x 7'– 0"	3	HM	T		D	HM	11	11			9	
218	2– 3'– 0"x 7'– 0"	3	HM	T		D	HM	11	11			6	
~~219~~	~~2– 3'– 0"x 7'– 0"~~	~~2~~	HM			D	HM	1	2	3		5	SHOWER
220	3'– 0"x 7'– 0"	2	HM		SHOWER	B	HM	10	10				
221	10'– 0"x 9'– 0"	4	AL			C	STL	8	7	9			
222	10'– 0"x 9'– 0"	4	AL			C	STL	8	7	9			

1. FOR HOLLOW METAL AND WOOD DOORS, TYPICAL DOOR CONDITION IS ONE EACH, 1–3/4" THICK LEAF UNLESS OTHERWISE NOTED

2. ALL OVERHEAD COILING DOORS TO BE INSULATED EXCEPT WHERE NOTED OTHERWISE.

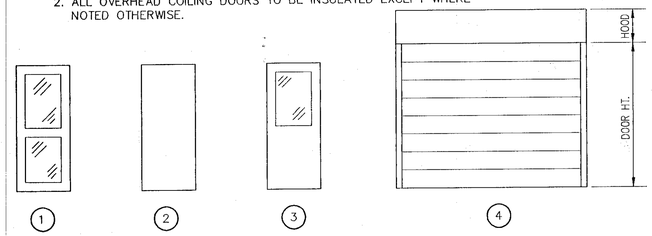

DOOR TYPES

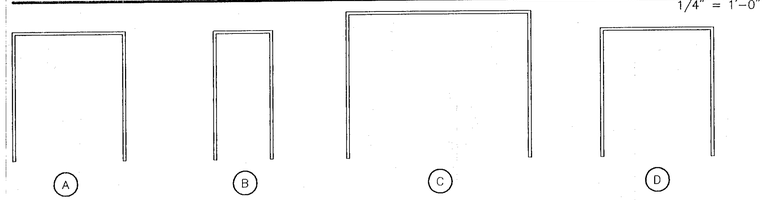

FRAME TYPES

1/4" = 1'–0"

DOOR GLASS TYPES

T = TEMPERED 1/4"
W = WIRE 1/4"

STATE OF NEW MEXICO
STEVEN T. KOFFMAN
NO. 1232
REGISTERED ARCHITECT
12-20-95

REDRAWN FOR RECORD PURPOSES

RECORD DRAWING
Date DECEMBER 1995
These drawings have been revised based on the construction records of the owner. While the information submitted by the Owner will be assumed to be reliable, the Engineer will not be responsible for the accuracy of this information nor for errors or omissions which may appear in the record document as a result thereof.

0 3" 6" 9" 1' 2'
1–1/2" = 1'–0" (A.F.S.)
0 .20 .40 .60
METERS (A.F.S.)
0 2' 4' 8' 12'
1/4" = 1'–0" (A.F.S.)
0 1 2 3 4
METERS (A.F.S.)

95/9002431AD2/DEXSCH2/12-13-95/FKP

REVISION	STATUS	DATE	DESCRIPTION	BY
1	AS–BUILT	12/95	RECORD DRAWING	DLJ

DEXTER NATIONAL FISH HATCHERY AND TECHNOLOGY CENTER – PHASE I

FISH CULTURE BUILDING SCHEDULES AND WINDOW DETAILS

DATE	DESIGNED	DRAWN	CHECKED	DRAWING NO.
NOV. 1993	STK	FKP	DLJ	S.E.C. – NM – 133 – 117.0

A 8

SHEET 18 OF 64

LEEDSHILL–HERKENHOFF, INC.
ALBUQUERQUE ENGINEERS SANTA FE ARCHITECTS SAN DIEGO

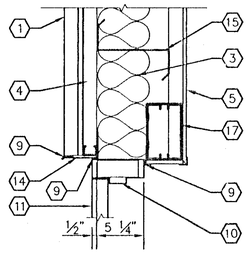

1 HEAD
SCALE : 1 1/2" = 1'-0"
A8 A9

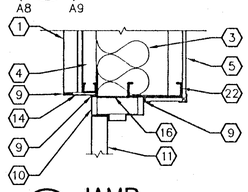

2 JAMB
SCALE : 1 1/2" = 1'-0"
A8 A9

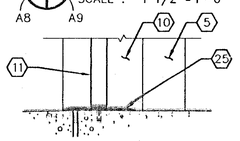

3 THRESHOLD
SCALE : 1 1/2" = 1'-0"
A8 A9

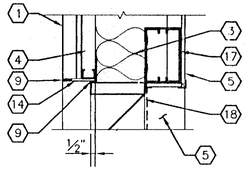

LOUVER HEAD (SILL SIM.)
4
SCALE : 1 1/2" = 1'-0"
A8 A9

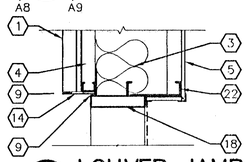

5 LOUVER JAMB
SCALE : 1 1/2" = 1'-0"
A8 A9

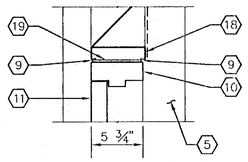

DOOR HEAD AT LOUVER
6
SCALE : 1 1/2" = 1'-0"
A8 A9

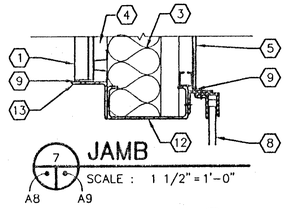

7 JAMB
SCALE : 1 1/2" = 1'-0"
A8 A9

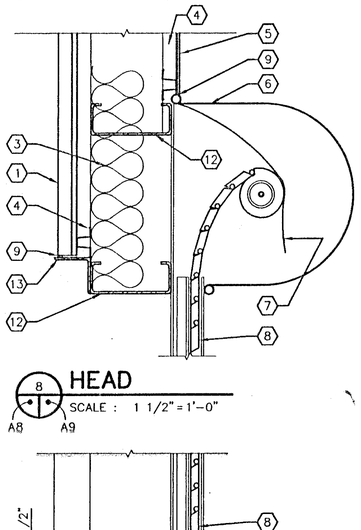

8 HEAD
SCALE : 1 1/2" = 1'-0"
A8 A9

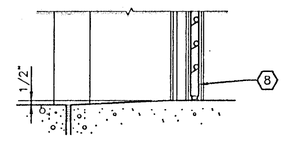

9 THRESHOLD
SCALE : 1 1/2" = 1'-0"
A8 A9

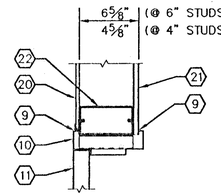

10 JAMB (HEAD SIM.)
SCALE : 1 1/2" = 1'-0"
A8 A9

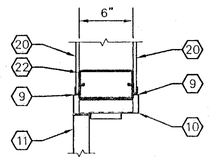

11 JAMB (HEAD SIM.)
SCALE : 1 1/2" = 1'-0"
A8 A9

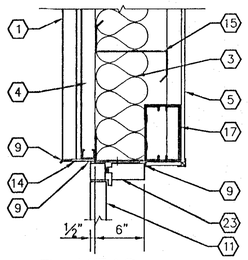

12 HEAD
SCALE : 1 1/2" = 1'-0"
A8 A9

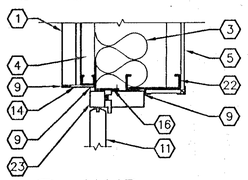

13 JAMB
SCALE : 1 1/2" = 1'-0"
A8 A9

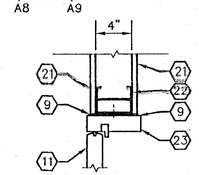

14 JAMB
SCALE : 1 1/2" = 1'-0"
A8 A9

15 NOT USED
SCALE: X" = 1'-0"

16 NOT USED
SCALE: X" = 1'-0"

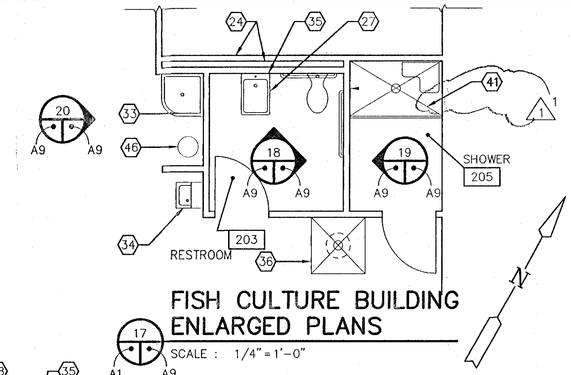

17
SCALE : 1/4" = 1'-0"
A1 A9

FISH CULTURE BUILDING
ENLARGED PLANS

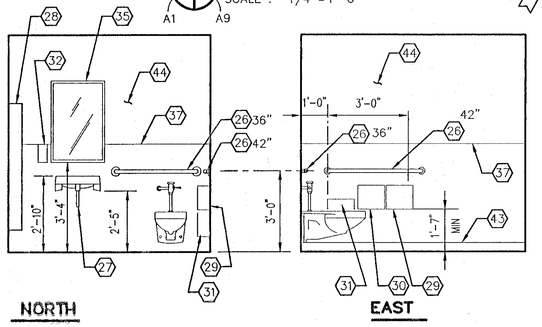

NORTH

EAST

18
SCALE : 3/8" = 1'-0"
A9 A9

RESTROOM ELEVATIONS

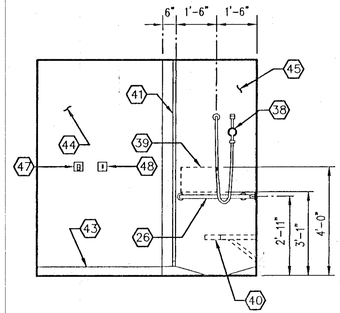

19
SCALE: 3/8" = 1'-0"
A9 A9

SHOWER ELEVATION

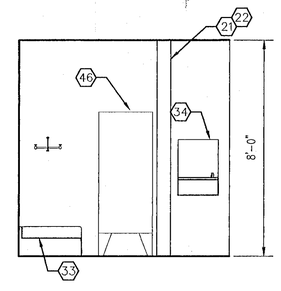

20
SCALE: 3/8" = 1'-0"
A9 A9

ELEVATION

KEYED NOTES

1 METAL BUILDING PANEL
2 NOT USED
3 6" BATT. INSULATION R-19
4 1½" FURRING CHANNELS @ 16" O.C. W/TOP & BOTTOM TRACKS
5 5/8" PLYWOOD PANEL OVER ½" FURRING CHANNELS
6 O.H. DOOR HOOD W/ WEATHERSTRIPPING
7 INTERNAL BAFFLE
8 INSULATED COILING DOOR
9 SEALANT
10 HOLLOW METAL FRAME
11 DOOR
12 CHANNEL FRAME
13 L4"x4"x¼"x CONTINUOUS WELD TO CHANNEL
14 PREFINISHED SHEET METAL FLASHING
15 GIRT
16 DOOR POST
17 6" METAL STUD LINTLE & FRAME
18 ALUMINUM LOUVER WITH INSECT SCREEN
19 ¼" PLYWOOD SHIM
20 PLYWOOD WALL PANEL
21 5/8" TYPE 'X' GYPSUM BOARD
22 METAL STUD
23 ALUMINUM FRAME
24 4" METAL STUDS
25 THRESHOLD
26 1½"ø GRAB BAR, LENGTH AS SHOWN
27 HANDICAP ACCESSABLE SINK
28 PAPER TOWEL DISPENSER & DISPOSAL
29 TOILET PAPER HOLDER
30 SANITARY NAPKIN DISPENSER
31 SANITARY NAPKIN DISPOSAL
32 SOAP DISPENSER
33 MOP SINK
34 ELECTRIC WATER COOLER, SEE MECHANICAL
35 MIRROR
36 SHOWER & EYE-WASH STATION
37 VINYL WAINSCOT TO 48"
38 HAND-HELD SHOWER/HOSE UNIT.
39 AREA FOR LOCATION OF CONTROLS
40 FOLD-UP SHOWER SEAT
41 FIBERGLASS SHOWER UNIT (1 2)
42 TOWEL HOOK
43 VINYL BASE
44 PAINTED GYPSUM BOARD
45 FIBERGLASS SHOWER
46 HOT WATER HEATER
47 ROBE HOOK

0 1' 2' 4' 8'
3/8" = 1'-0" (A.F.S.)
0 .5 1 1.5 2 2.5
METERS (A.F.S.)

0 2' 4' 8' 12'
1/4" = 1'-0" (A.F.S.)
0 1 2 3 4
METERS (A.F.S.)

0 3" 6" 9" 1' 2'
1-1/2" = 1'-0" (A.F.S.)
0 .20 .40 .60
METERS (A.F.S.)

RECORD DRAWING
Date DECEMBER 1995
These drawings have been revised based on the construction records of the owner. While the information submitted by the Owner will be assumed to be reliable, the Engineer will not be responsible for the accuracy of this information nor for errors or omissions which may appear in the record document as a result thereof.

48/9002431AD2/DEXEFP/12-13-95/FKP

STATE OF NEW MEXICO
STEVEN T. KOFFMAN
NO. 1232
12-20-95
REGISTERED ARCHITECT

REDRAWN FOR RECORD PURPOSES

REVISION	STATUS	DATE	DESCRIPTION	BY
1 2	AS-BUILT	12/95	RECORD DRAWING	DLJ

DEXTER NATIONAL FISH HATCHERY AND TECHNOLOGY CENTER – PHASE I

FISH CULTURE BUILDING DOOR DETAILS AND INTERIOR PLANS AND ELEVATIONS

DATE	DESIGNED	DRAWN	CHECKED	DRAWING NO.
NOV. 1993	STK	FKP	DLJ	S.E.C. – NM – 133 – 118.0

A 9

LEEDSHILL-HERKENHOFF, INC.
ARCHITECTS SAN DIEGO
SANTA FE
ENGINEERS
ALBUQUERQUE

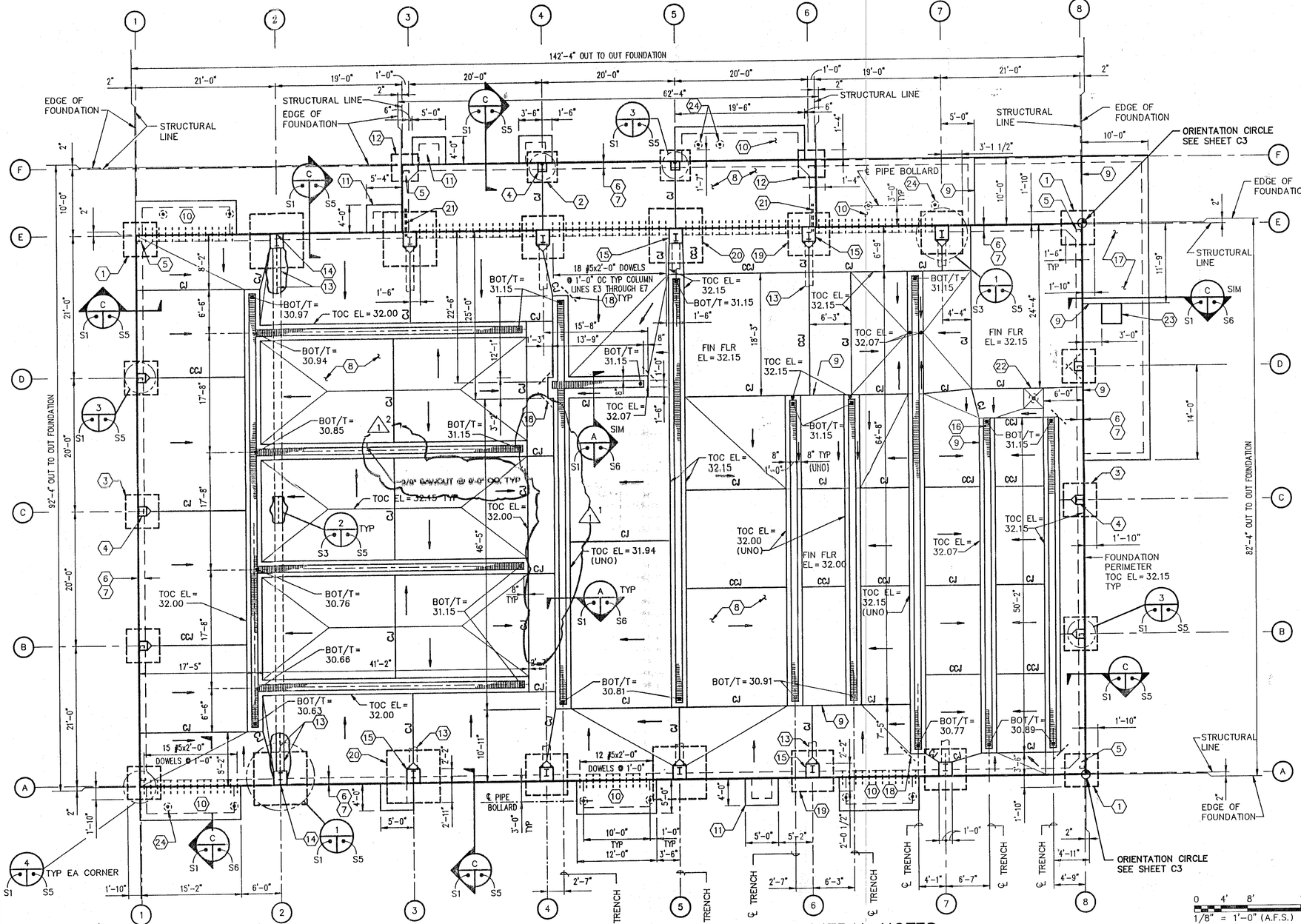

FOUNDATION PLAN

SCALE: 1/8" = 1'-0"

KEYED NOTES

1. 5'-0" SQ x 1'-0" THICK FOOTING WITH 6~#5 EACH WAY, TYPICAL AT COLUMNS A1, A8, E1 AND E8. BOTTOM FOOTING EL = 3427.65
2. 4'-6" SQ x 1'-0" THICK FOOTING WITH 5~#5 EACH WAY, AT COLUMN F4 AND F5. BOTTOM FOOTING EL = 3427.65'
3. 5'-0" SQ x 1'-0" THICK FOOTING WITH 6~#5 EACH WAY, AT ENDWALL POSTS. TYPICAL AT COLUMNS B1, B8, C1, C8, D1 AND D8. BOTTOM OF FOOTING EL = 3427.65
4. 16" SQ PIER. TYPICAL AT COLUMNS B1, B8, C1, C8, D1 AND D8. SEE DETAIL 3, SHEET S5 FOR REINFORCING.
5. CAST PIER MONOLITHIC WITH SLAB AND GRADE BEAM. TYPICAL EACH CORNER. SEE DETAIL 4, SHEET S5 FOR REINFORCING.
6. SLAB MONOLITHIC WITH GRADE BEAM AT PERIMETER OF FOUNDATION. BOTTOM GRADE BEAM EL = 3428.65
7. 1'-0" THICK GRADE BEAM UNLESS NOTED OTHERWISE. SEE SECTION C, SHEET S5 FOR REINFORCING.
8. 8" CONCRETE SLAB ON GRADE WITH #4 AT 12" ON CENTER, EACH WAY, OVER 5'-0" OF COMPACTED FILL, TYPICAL.
9. 1/2" PREMOLDED BITUMINOUS EXPANSION JOINT MATERIAL, TYPICAL AROUND ALL TRENCHES.
10. 8" CONCRETE APRON WITH THICKENED EDGE, REINFORCE WITH #4 @ 12" ON CENTER, EACH WAY.
11. 4" CONCRETE STOOP WITH THICKENED EDGE. SEE SHEET S6, SECTION B.
12. 4'-0" SQ x 1'-0" THICK FOOTING WITH 5#5 EACH WAY, BOTTOM FOOTING EL = 3427.65. TYPICAL AT COLUMNS F3 AND F6.
13. #10 TIE ROD BELOW SLAB IN CONCRETE ENCASEMENT WITH TIE ROD 1'-2" BELOW FINISH FLOOR AT COLUMNS 4,6 AND 7; TIE ROD 3'-0" BELOW FINISH FLOOR AT COLUMN LINES 2, 3 AND 5.
14. #10 TIE ROD THRU PIER, TYPICAL COLUMNS 2 THRU 7.
15. 2'-0" x 2'-2" PIER, TYPICAL COLUMNS A2 THRU A7 AND COLUMNS E2 THRU E7. SEE DETAIL 1, SHEET S5 FOR REINFORCING.
16. ALUMINUM GRATING WITH 1"x1/4" BEARING BARS AT 1 3/16" ON CENTER. TYPICAL AT ALL TRENCHES.
17. 4" CONCRETE SLAB. SEE SHEET C5 FOR TOP OF SLAB ELEVATIONS.
18. #4 x 4' DIAGONAL – TYPICAL AT CORNERS WHERE SHOWN.
19. 6'-3" SQ x 1'-3" THICK FOOTING WITH 6~#5 EACH WAY, TYPICAL COLUMNS A4, A6, A7, E4, E6 AND E7. BOTTOM FOOTING EL = 3427.40
20. 8'-0" SQ x 1'-6" THICK FOOTING WITH 8#6 EACH WAY BOTTOM AND 6#4 EACH WAY TOP. TYPICAL COLUMNS A2, A3, A5, E2, E3 AND E5. BOTTOM FOOTING EL = 3427.15
21. 2~#5 x 4'-0" DOWELS TOP AND 2~#6 x 4'-0" DOWELS BOTTOM. PROJECT 2'-0" FROM PIER, LAP 1'-10" WITH GRADE BEAM REINFORCEMENT.
22. SLOPE SLAB 3/4" TO DRAIN AT EYEWASH STATION. SEE DRAWING M2 AND M7 FOR PLUMBING.
23. 6" THICK x 3'-0" SQUARE CONCRETE PAD WITH #4 @ 12" ON CENTER, EACH WAY FOR CONDENSING UNIT. SEE DRAWING M2. TOP OF PAD EL = 31.90
24. CONCRETE FILLED 4" STD WT PIPE BOLLARD. PROJECT 4'-0" ABOVE TOP OF APRON. EMBED 3'-0" IN 14" DIAMETER CONCRETE PIER BELOW APRON. TYPICAL AT ROLL-UP DOORS AND AT PRESSURE REGULATING VALVE (COORDINATE LOCATION WITH VALVE, SEE SHEET M2).

ABBREVIATIONS

BOT/T	BOTTOM OF TRENCH ELEVATION	FIN FLR	FINISH FLOOR
CCJ	CRACK CONTROL JOINT, SAW CUT, PREFORMED ZIP STRIP OR CONSTRUCTION JOINT AT CONTRACTOR'S OPTION.	SIM	SIMILAR
		TOC	TOP OF CONCRETE
CJ	CONSTRUCTION JOINT.	TYP	TYPICAL
EL	ELEVATION	UNO	UNLESS NOTED OTHERWISE

GENERAL NOTES

1. ALL ELEVATIONS ARE 3400'+.
2. SEE DRAWING S6 FOR GENERAL STRUCTURAL NOTES AND DESIGN CRITERIA NOT OTHERWISE SPECIFIED BELOW.
3. DIMENSIONS TO BUILDING PERIMETER ARE TO EDGE OF FOUNDATION, NOT TO STRUCTURAL LINE.
4. SEE DRAWINGS W1 AND M3 FOR UNDERGROUND PIPING, PIPE PENETRATIONS THROUGH CONCRETE FLOORS, CLEANOUTS AND FOR FLOOR DRAINS NOT SHOWN. SLOPE SLABS TO DRAINS.
5. SEE DETAIL 2, SHEET S6 FOR JOINT DETAILS.

0 4' 8' 16' 24'
1/8" = 1'-0" (A.F.S.)
0 1 2 3 4 5 6 7 8
METERS (A.F.S.)

RECORD DRAWING
Date DECEMBER 1995
These drawings have been revised based on the construction records of the owner. While the information submitted by the Owner will be assumed to be reliable, the Engineer will not be responsible for the accuracy of this information nor for errors or omissions which may appear in the record document as a result thereof.

96/90024.31SD1/DEXFND2/11-19-93/KHK

REVISION	STATUS	DATE	DESCRIPTION	BY
1 2	AS-BUILT	12/95	RECORD DRAWING	MAZ

DEXTER NATIONAL FISH HATCHERY AND TECHNOLOGY CENTER – PHASE I

FISH CULTURE BUILDING – FOUNDATION PLAN

DATE	DESIGNED	DRAWN	CHECKED	DRAWING NO.
NOV. 1993	MAZ	TJL	MAZ	S.E.C. – NM – 133 – 128.0

S 1

LEEDSHILL-HERKENHOFF, INC. ENGINEERS SANTA FE ARCHITECTS SAN DIEGO ALBUQUERQUE

SHEET 29 OF 64

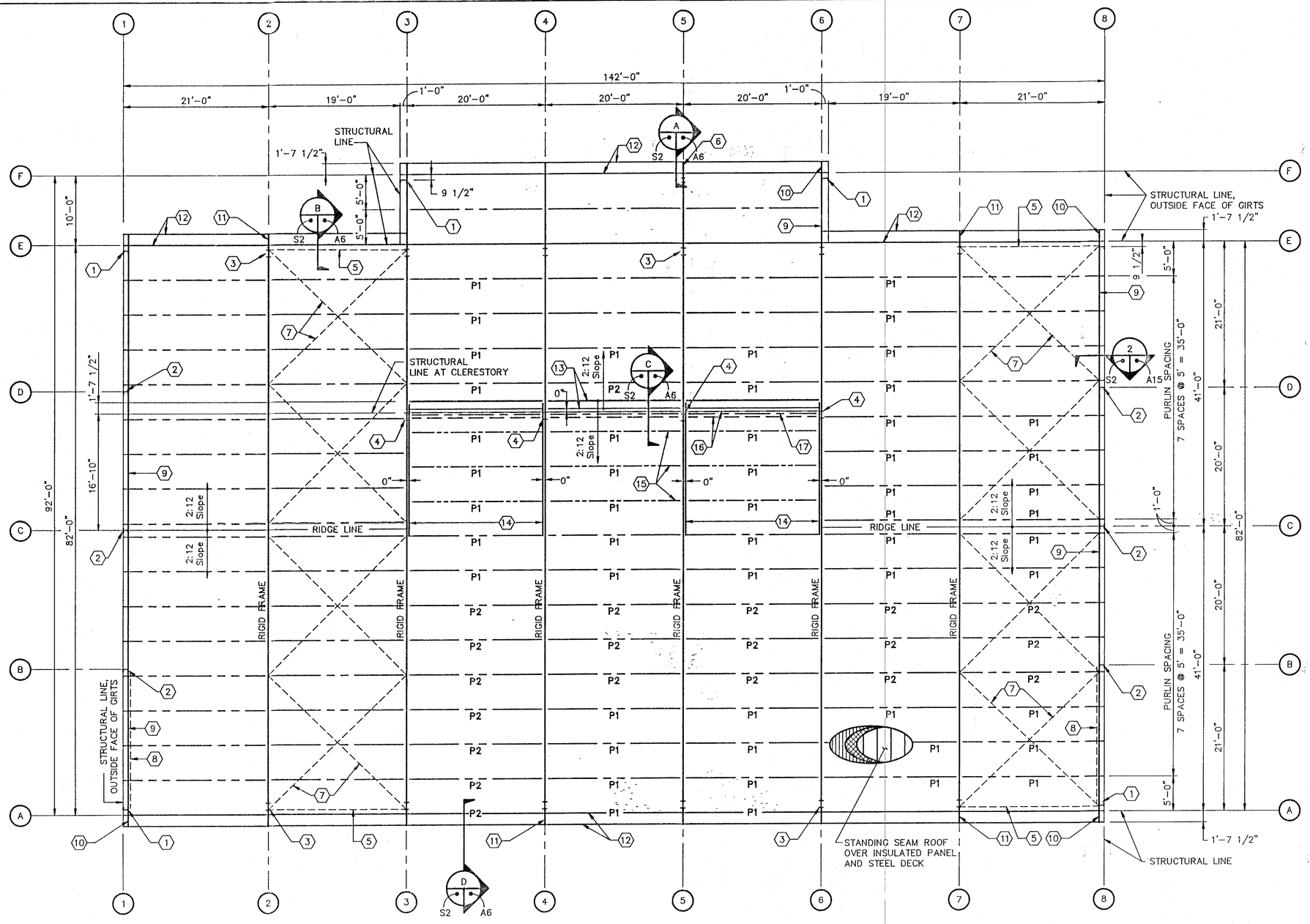

ROOF FRAMING PLAN

SCALE: 1/8"=1'-0"

GENERAL NOTES

1. SEE DRAWING S6 FOR GENERAL STRUCTURAL NOTES AND DESIGN CRITERIA NOT OTHERWISE SPECIFIED BELOW.
2. ALL ROOF PURLINS AND EAVE STRUTS SHALL BE DESIGNED FOR UNIFORM LIVE AND COLLATERAL LOADS AS SHOWN ON DRAWING S3. IN ADDITION, PURLINS AND EAVE STRUTS DESIGNATED P1 SHALL BE DESIGNED FOR UNIFORM LIVE LOAD OF 30 PSF PLUS 4 CONCENTRATED LOADS OF .500 K EACH, AT 2'-6" ON CENTER PLACED ANYWHERE ALONG THE SPAN. PURLINS DESIGNATED P2 SHALL BE DESIGNED FOR UNIFORM LIVE LOAD OF 30 PSF PLUS 6 CONCENTRATED LOADS OF .500 K EACH, AT 2'-6" ON CENTER PLACED ANYWHERE ALONG THE SPAN.
3. SEE DRAWING W1 FOR ROUTING OF PIPING TO BE SUSPENDED FROM THE ROOF. SEE DRAWING W4 FOR PIPE HANGER DETAILS.
4. SEE DRAWING M2 FOR HVAC EQUIPMENT TO BE SUPPORTED FROM THE ROOF. PROVIDE FRAMING AROUND ROOF PENETRATIONS TO SUPPORT EQUIPMENT AND ROOFING.

KEYED NOTES

1 CORNER POST.
2 ENDWALL POST.
3 TAPERED COLUMN, TYPICAL COLUMNS 2 THRU 7.
4 POST ON TOP OF RIGID FRAME FOR CLERESTORY.
5 DIAGONAL ROD BRACE AT SIDEWALL FROM TOP OF INNER COLUMN TO BASE PLATE AT CORNER POST OR OUTER COLUMN.
6 CANTILEVER WIDTH EXTENSION BEAM BEYOND COLUMN.
7 ROD CROSS BRACING BELOW PURLINS.
8 ROD CROSS BRACING AT END WALL.
9 ENDWALL ROOF BEAM.
10 CANTILEVER ENDWALL ROOF BEAM BEYOND CORNER POST.
11 CANOPY BEAM.
12 EAVE STRUT.
13 EAVE STRUT ABOVE CLERESTORY.
14 ROOF BEAM ABOVE RIGID FRAME FOR CLERESTORY, CANTILEVER FOR OVERHANG.
15 ROOF PURLIN AT CLERESTORY FRAMING.
16 PURLIN BELOW CLERESTORY WINDOWS.
17 GIRT ABOVE AND BELOW CLERESTORY WINDOWS.

0 4' 8' 16' 24'
1/8" = 1'-0" (A.F.S.)
0 1 2 3 4 5 6 7 8
METERS (A.F.S.)

96/90024.31SD1/DEXFRM2/11-19-93/KHK

REVISION	STATUS	DATE	DESCRIPTION	BY
1	AS-BUILT	12/95	RECORD DRAWING	MAZ

DEXTER NATIONAL FISH HATCHERY AND TECHNOLOGY CENTER – PHASE I

FISH CULTURE BUILDING – ROOF FRAMING PLAN

DATE	DESIGNED	DRAWN	CHECKED	DRAWING NO.
NOV. 1993	MAZ	TJL	MAZ	S.E.C. – NM – 133 – 129.0

S 2

LEEDSHILL-HERKENHOFF, INC.

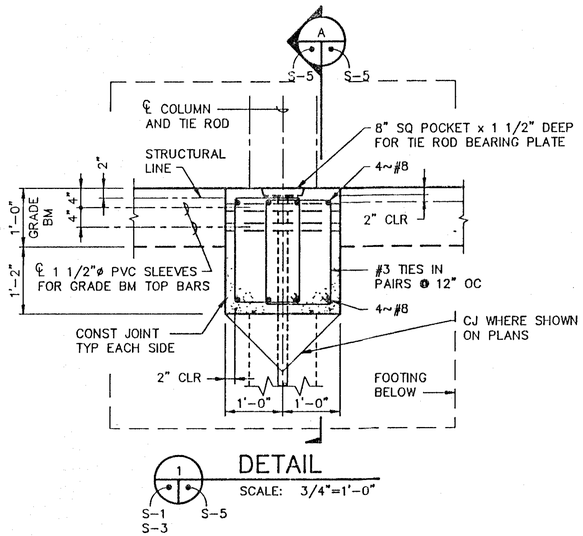

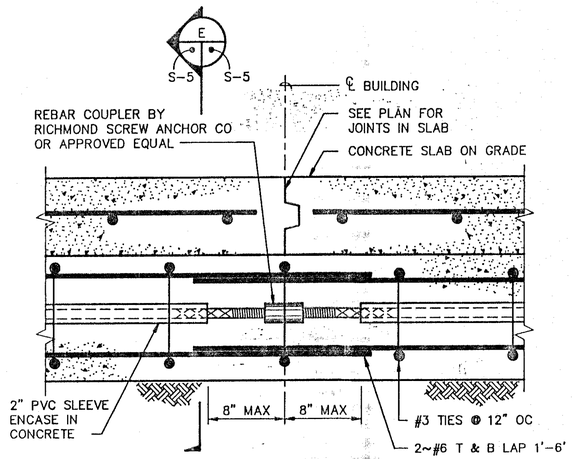

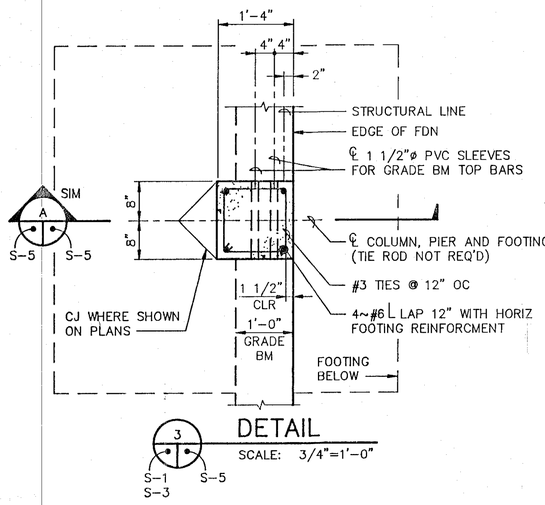

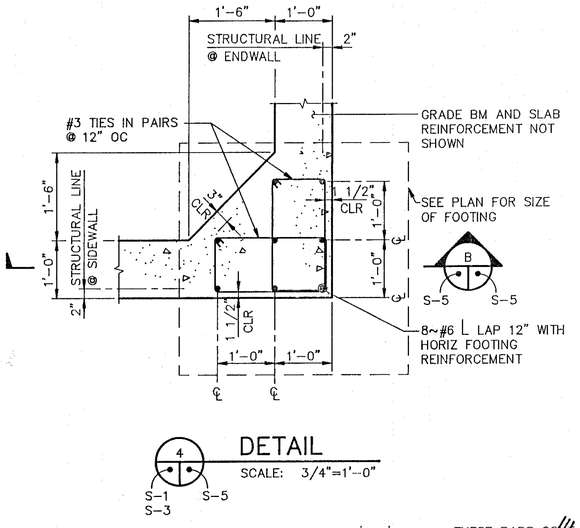

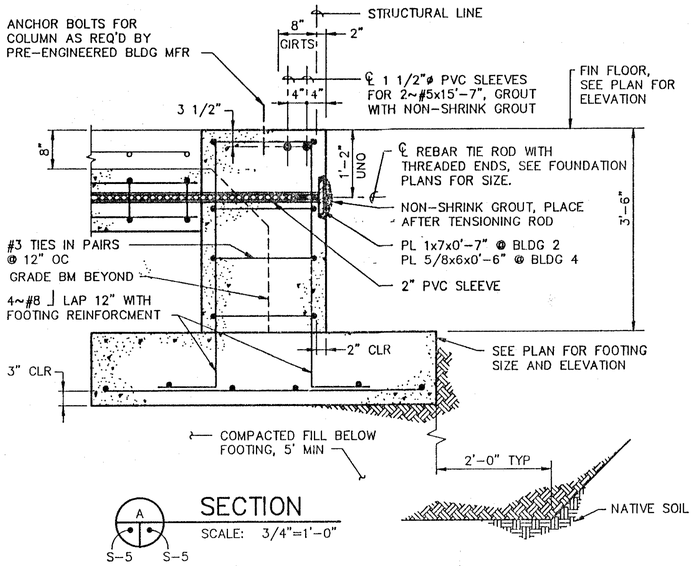

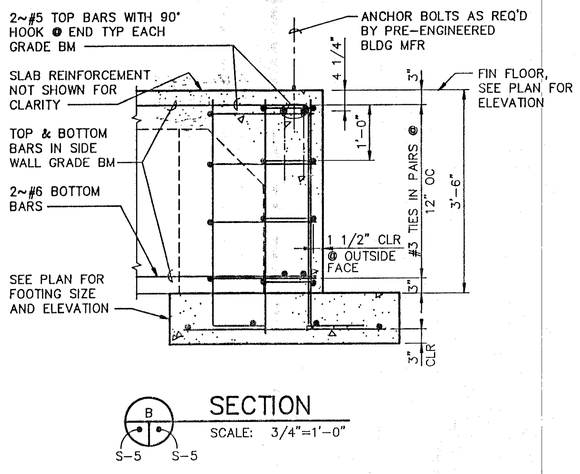

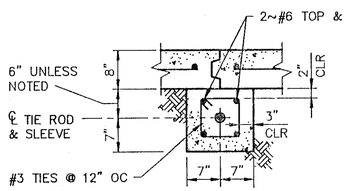

0 3" 6" 9" 1' 2'
1-1/2" = 1'-0" (A.F.S.)
0 .20 .40 .60
METERS (A.F.S.)

0 6" 1' 2' 4'
3/4" = 1'-0"(A.F.S.)
0 .2 .4 .6 .8 1.0 1.2
METERS (A.F.S.)

RECORD DRAWING
Date DECEMBER 1995
These drawings have been revised based on the construction records of the owner. While the information submitted by the Owner will be assumed to be reliable, the Engineer will not be responsible for the accuracy of this information nor for errors or omissions which may appear in the record document as a result thereof.

MICHAEL A. ZYGOCKI NEW MEXICO REGISTERED PROFESSIONAL ENGINEER

THIS DRAWING SET WAS DEVELOPED FOR TWO SEPARATE BID SCHEDULES. BID ONLY WORK DESIGNATED AS BID SCHEDULE A AND AS BID SCHEDULE A ALTERNATIVES.

WORK DESIGNATED AS BELONGING TO BID SCHEDULE B OR BID SCHEDULE B ALTERNATIVES SHALL BE DISREGARDED.

16/90029.31SD1/FNDETS/11-19-93/KHK

REVISION	STATUS	DATE	DESCRIPTION	BY
1	AS-BUILT	12/95	RECORD DRAWING	MAZ

DEXTER NATIONAL FISH HATCHERY AND TECHNOLOGY CENTER – PHASE 1

FOUNDATION DETAILS

S 5

DATE	DESIGNED	DRAWN	CHECKED	DRAWING NO.
NOV. 1993	MAZ	TJL	MAZ	S.E.C. – NM – 133 – 132.0

LEEDSHILL-HERKENHOFF, INC.
ENGINEERS ALBUQUERQUE SANTA FE ARCHITECTS SAN DIEGO

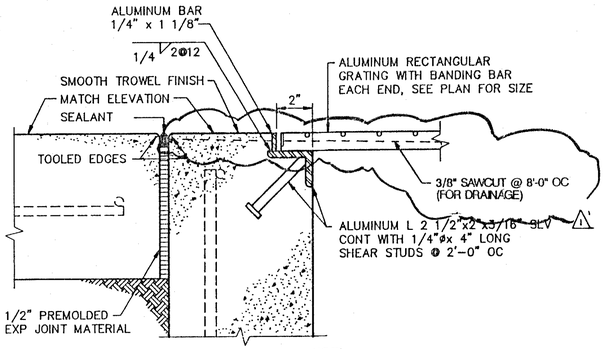

1 DETAIL
SCALE: 3"=1'-0"
S-6 S-6

NOTE:
ALL ALUMINUM SURFACES IN CONTACT WITH CONCRETE SHALL BE COATED WITH BITUMINOUS PAINT.

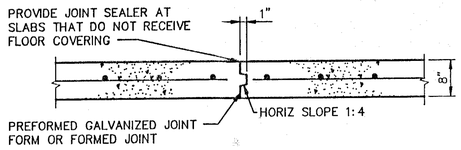

CONSTRUCTION JOINT (CJ)

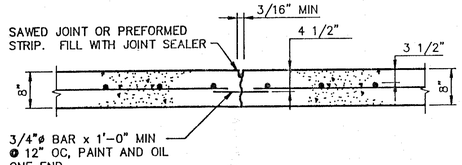

CRACK CONTROL JOINT (CCJ)

2 JOINT DETAILS
NOT TO SCALE
S-1 S-6
S-3

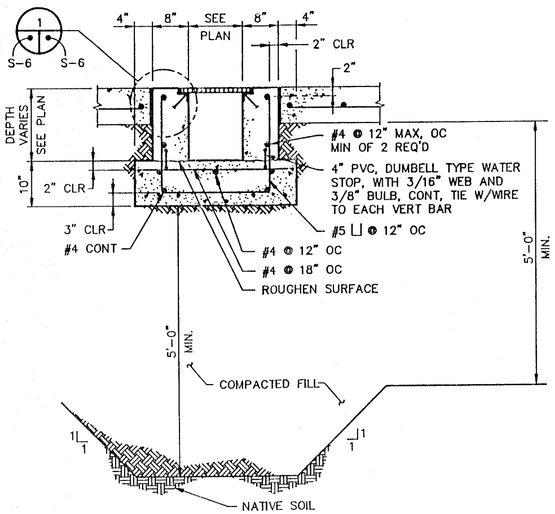

A TRENCH SECTION
SCALE: 3/4"=1'-0"
S-1 S-6

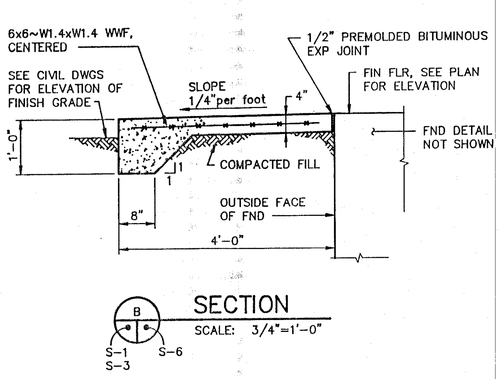

B SECTION
SCALE: 3/4"=1'-0"
S-1 S-6
S-3

GENERAL STRUCTURAL NOTES

1. DESIGN LOADS
   - A SNOW LOAD 20 PSF
   - B COLLATERAL LOAD 10 PSF FISH CULTURE BUILDING ONLY, SEE SHEET S2 FOR PIPING LOADS.
   - C SEISMIC ZONE 1
   - D WIND VELOCITY 80 MPH EXPOSURE C
2. ALLOWABLE NET SOIL BEARING PRESSURE

A	FOUNDATIONS	2000 PSF
B	SLABS ON GRADE	500 PSF
C	INTERIOR WALLS	800 PLF

3. FOR SLAB PENETRATIONS NOT SHOWN ON FOUNDATION PLANS, SEE MECHANICAL AND ELECTRICAL SHEETS.
4. CONCRETE COMPRESSIVE STRENGTH AND SLABS SHALL BE 4000 PSI AT 28 DAYS.
5. REINFORCING SHALL BE CONTINUOUS AROUND ALL CORNERS UNLESS SHOWN OTHERWISE.
6. CONCRETE SHALL BE PLACED CONTINUOUSLY BETWEEN CONSTRUCTION JOINTS.
7. SITE PREPARATION FOR THE BUILDINGS SHALL CONSIST OF OVEREXCAVATING THE NATIVE SOILS BENEATH THE EXTERIOR FOUNDATIONS FOR THE PROPOSED BUILDINGS TO A DEPTH OF 5 FEET.
8. NATIVE SOIL SHALL BE OVEREXCAVATED 5 FEET BELOW BOTTOM OF SLAB AT LOWEST TRENCH POINT AND 5 FEET BELOW 8" SLABS ON GRADE.
9. PRIOR TO PLACEMENT OF FILL, THE NATIVE SOILS SHALL BE SCARIFIED TO A DEPTH OF 8" AND MOISTENED OR AIR DRIED TO A NEAR OPTIMUM MOISTURE CONTENT (±3%) AND COMPACTED TO 95% OF MAX DENSITY AS DETERMINED BY MODIFIED PROCTOR (ASTM D1557). COMPACTION OF FILL SHALL BE PLACED IN 8 INCH LIFTS.
10. ALL FILL UNDER BUILDING FOUNDATIONS AND SLABS SHALL BE COMPACTED TO NOT LESS THAN 95% OF MAX DENSITY AS DETERMINED BY MODIFIED PROCTOR (ASTM D1557).

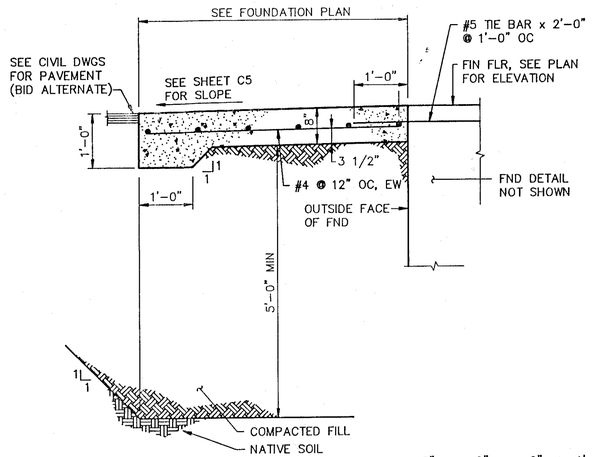

C SECTION
SCALE: 3/4"=1'-0"
S-1 S-6
S-3

0 3" 6" 9" 1'
3" = 1'-0" (A.F.S.)
0 .10 .20 .30
METERS (A.F.S.)

0 6" 1' 2' 4'
3/4" = 1'-0"(A.F.S.)
0 .2 .4 .6 .8 1.0 1.2
METERS (A.F.S.)

RECORD DRAWING
Date DECEMBER 1995
These drawings have been revised based on the construction records of the owner. While the information submitted by the Owner will be assumed to be reliable, the Engineer will not be responsible for the accuracy of this information nor for errors or omissions which may appear in the record document as a result thereof.

16/90024.31SD1/FNDETS-2/11-19-93/KHK

REVISION	STATUS	DATE	DESCRIPTION	BY
1	AS-BUILT	12/95	RECORD DRAWING	MAZ

DEXTER NATIONAL FISH HATCHERY AND TECHNOLOGY CENTER – PHASE 1

FOUNDATION DETAILS

DATE	DESIGNED	DRAWN	CHECKED	DRAWING NO.
NOV. 1993	MAZ	TJL	MAZ	S.E.C. – NM – 133 – 133.0

S 6

MICHAEL A. ZWOLINSKI NEW MEXICO 11993 REGISTERED PROFESSIONAL ENGINEER 11-19-93

LEEDSHILL-HERKENHOFF, INC.
ENGINEERS SANTA FE ALBUQUERQUE ARCHITECTS SAN DIEGO

SYMBOL LEGEND

—CW—	COLD WATER
—HW—	HOT WATER
—HHWS—	HEATING WATER SUPPLY
—HHWR—	HEATING WATER RETURN
—SS—	SANITARY SEWER
—RL—	REFRIGERANT LIQUID
—RS—	REFRIGERANT SUCTION
- - - - -	VENT PIPING
— G —	NATURAL GAS
— D —	DRAIN PIPING
—X—	PIPE ANCHOR
	PIPE GUIDE
	45° ELBOW
	90° ELBOW
	TEE
	ELBOW DOWN
	ELBOW UP
	TEE DOWN
	TEE UP
	VALVE IN DROP
	GATE VALVE
	CHECK VALVE
	AUTOMATIC BALANCING VALVE
	MANUAL BALANCING VALVE
	BUTTERFLY VALVE
	PRESSURE REGULATING/BACKPRESSURE VALVE
HB	HOSE BIBB
	PIPE CONNECTION
BFP	BACKFLOW PREVENTOR
FD	FLOOR DRAIN
FS	FLOOR SINK
	DUCTWORK
	FLEX DUCTWORK
	TURNING VANES
	SUPPLY DIFFUSER
	RETURN DIFFUSER/GRILLE
	EXHAUST DIFFUSER/GRILLE
T	THERMOSTAT
H	HUMIDISTAT
	BALANCING DAMPER
	PUMP (SCHEMATIC)
	BALL VALVE
	CONTROL VALVE
	WYE STRAINER WITH 3/4" BALL VALVE BLOWDOWN
M	MOTORIZED DAMPER OR VALVE

ABBREVIATIONS

TYP.	TYPICAL
I.E.	INVERT ELEVATION
A.F.F.	ABOVE FINISHED FLOOR
VTR	VENT THRU ROOF
D.C.O.	DOUBLE CLEANOUT
C.O.	CLEANOUT
RPM	REVOLUTIONS PER MINUTE
CFM	CUBIC FEET PER MINUTE
SP	STATIC PRESSURE
EWT	ENTERING WATER TEMPERATURE
LWT	LEAVING WATER TEMPERATURE
MIN.	MINIMUM
MAX.	MAXIMUM
HP	HORSEPOWER
AMP	AMPERES
PH.	PHASE
BPV	BACK PRESSURE VALVE
FLA	FULL LOAD AMPS
LRA	LOCKED ROTOR AMPS
P.D.	PRESSURE DROP
FT	FEET
SCFM	STANDARD CUBIC FEET PER MINUTE
BTU	BRITISH THERMAL UNIT
BTUH	BRITISH THERMAL UNITS PER HOUR
MBH	1000 BTUH
GPM	GALLONS PER MINUTE
MCA	MINIMUM CIRCUIT AMPACITY
U.L.	UNDERWRITERS LABORATORY
OAT	OUTSIDE AIR TEMPERATURE
COR	CONTRACTING OFFICERS REPRESENTATIVE
HHWP	HEATING WATER PUMP
TSP	TOTAL STATIC PRESSURE
ESP	EXTERNAL STATIC PRESSURE
IN.	INCHES
WG	WATER GAGE
HZ	HERTZ
DB	DECIBELS

REFERENCE "BUBBLE" DESCRIPTION

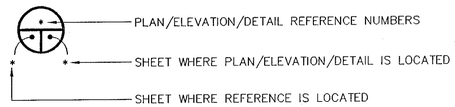

RECORD DRAWING
Date DEC 1995

These drawings have been revised based on the construction records of the owner. While the information submitted by the Owner will be assumed to be reliable, the Engineer will not be responsible for the accuracy of this information nor for errors or omissions which may appear in the record document as a result thereof.

DUANE E. WALLACE
NEW MEXICO
8985
REGISTERED PROFESSIONAL ENGINEER
12-1-95

1/90024.35MD2/LEGEND/11-04-95/SJH

REVISION	STATUS	DATE	DESCRIPTION	BY
1	AS-BUILT	12/95	RECORD DRAWING	DEW

DEXTER NATIONAL FISH HATCHERY AND TECHNOLOGY CENTER – PHASE I

MECHANICAL SYMBOL LEGEND

M 1

DATE	DESIGNED	DRAWN	CHECKED	DRAWING NO.
NOV. 1993	DEW	RNF	DEW	S.E.C. – NM – 133 – 134.0

LEEDSHILL-HERKENHOFF, INC.
ENGINEERS ALBUQUERQUE
ARCHITECTS SANTA FE SAN DIEGO

GENERAL NOTES

1. FOR TYPICAL DETAILS SEE SHEETS M7 THRU M8.
2. MOUNT UNIT HEATERS WITHIN 1'-0" OF STRUCTURE. HOLD PIPING NEAR TOP OF UNIT HEATERS.
3. MOUNT THERMOSTATS AT 7' A.F.F.

KEYED NOTES ⬡

1 NOT USED.

2 SEE ENLARGED MECHANICAL ROOM PLAN 3, SHEET M6 FOR PIPING AND EQUIPMENT LAYOUT IN THIS AREA.

3 CD-2001, 285 CFM, 9"x9" NECK.

4 RG-2001, 685 CFM.

5 EF-2003, VERTICALLY MOUNTED IN-LINE FAN. EXTEND 14"x30" DUCT FROM FAN THRU ROOF. TERMINATE WITH GOOSENECK ON ROOF. SEE DETAIL 6 SHEET M8, AND DETAIL 8, SHEET M7.

6 ROUTE 3/4" CONDENSATE DRAIN DOWN TO FD.

7 NOT USED.

8 NOT USED.

9 NOT USED.

10 MOUNT HAND-OFF-AUTO SWITCH ADJACENT TO HUMIDISTAT AS SPECIFIED.

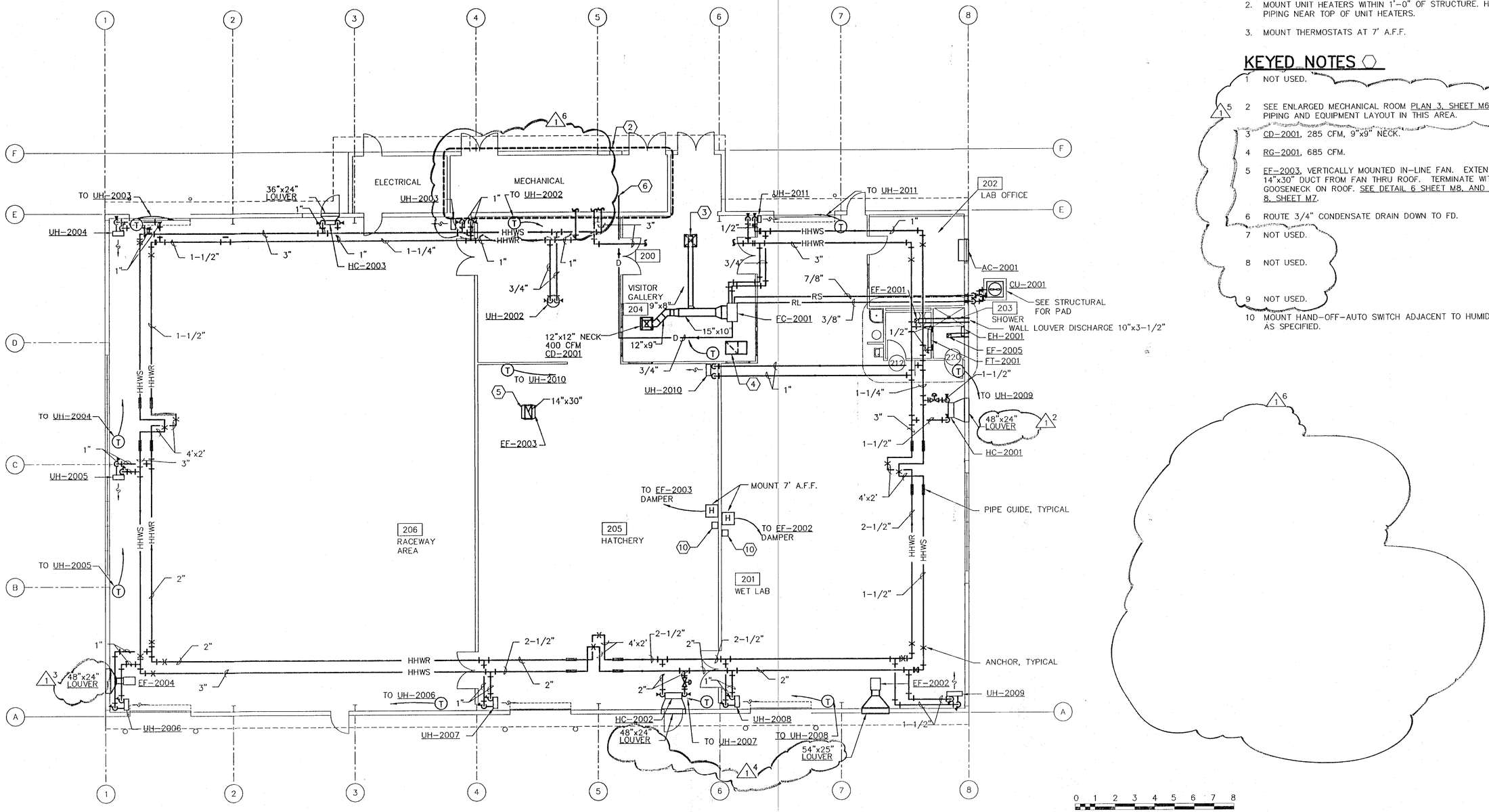

0 1 2 3 4 5 6 7 8
METERS (A.F.S.)

0 4' 8' 16' 24'
1/8" = 1'-0" (A.F.S.)

96/90024.35MD2/B2HV/12-04-95/SJH

HVAC PLAN
SCALE: 1/8"=1'-0"
M2 M2

RECORD DRAWING
Date DEC 1995

These drawings have been revised based on the construction records of the owner. While the information submitted by the Owner will be assumed to be reliable, the Engineer will not be responsible for the accuracy of this information nor for errors or omissions which may appear in the record document as a result thereof.

REDRAWN FOR RECORD PURPOSES

REVISION	STATUS	DATE	DESCRIPTION	BY
6	AS-BUILT	12/95	RECORD DRAWING	DEW

DEXTER NATIONAL FISH HATCHERY AND TECHNOLOGY CENTER – PHASE I

FISH CULTURE BUILDING – HVAC PLAN

M 2

DATE	DESIGNED	DRAWN	CHECKED	DRAWING NO.
NOV. 1993	DEW	RNF	DEW	S.E.C. – NM – 133 – 135.0

LEEDSHILL-HERKENHOFF, INC.
ENGINEERS ALBUQUERQUE ARCHITECTS SANTA FE SAN DIEGO

GENERAL NOTES

1. FOR TYPICAL DETAILS SEE SHEET M8.
2. REFER TO CIVIL DRAWINGS FOR CONTINUATION OF WATER AND WASTE PIPING.

KEYED NOTES ⬡

1 DRAIN LINE UP TO FD SET 0.02' BELOW BOTTOM OF TRENCH. SEE STRUCTURAL PLAN FOR TRENCH LOCATION AND DETAILS.

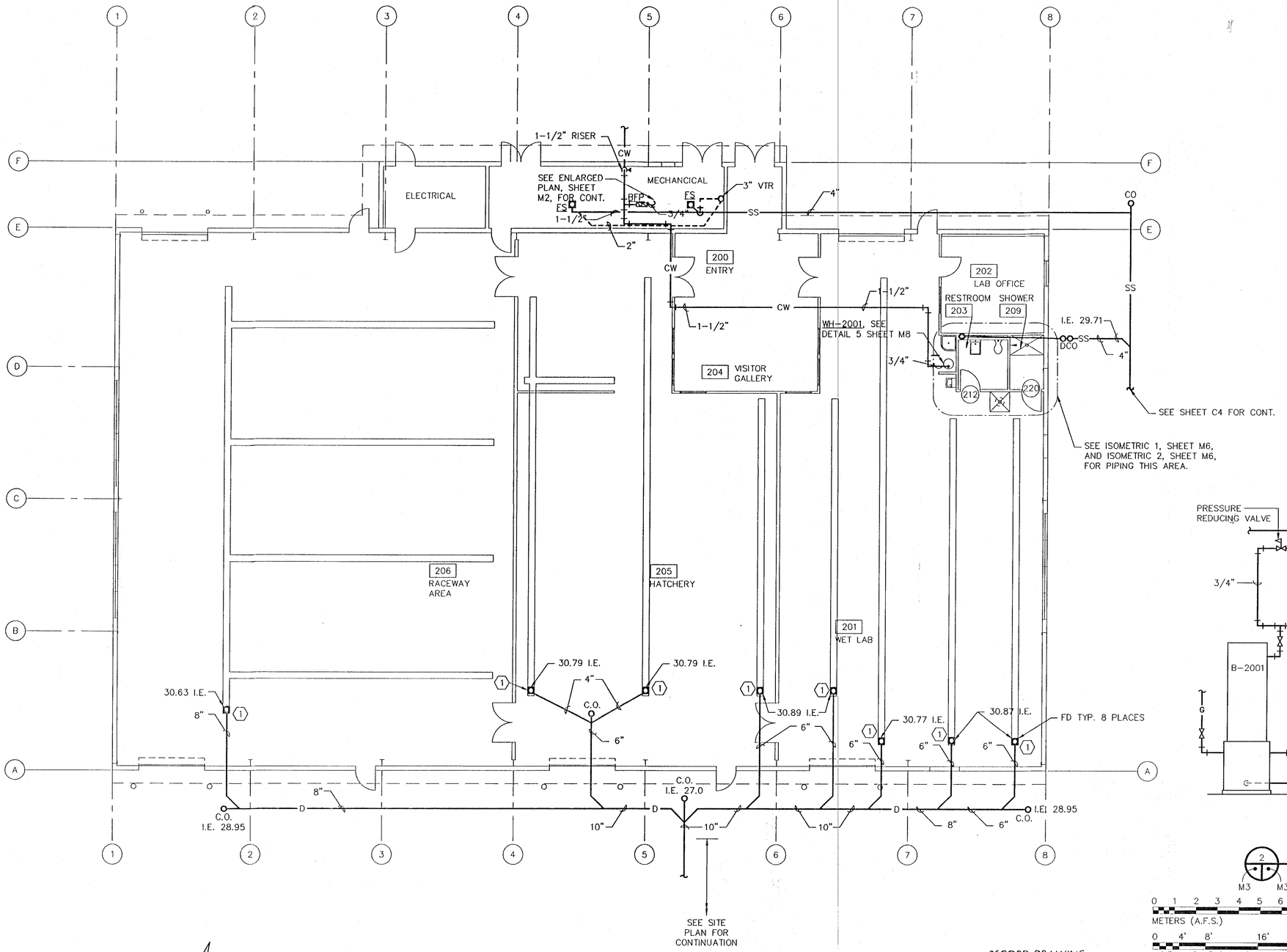

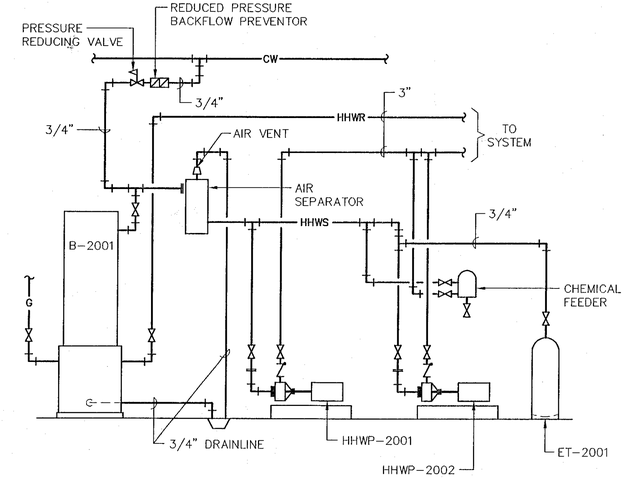

HEATING WATER PIPING SCHEMATIC

2 M3 M3 SCALE: NONE

PLUMBING PLAN

1 M3 M3 SCALE : 1/8" = 1'-0"

0 1 2 3 4 5 6 7 8 METERS (A.F.S.)

0 4' 8' 16' 24' 1/8" = 1'-0" (A.F.S.)

FP2B3A

96/90024.35MD2/B2APL1/12-07-95/SJH

RECORD DRAWING
Date DEC 1995
These drawings have been revised based on the construction records of the owner. While the information submitted by the Owner will be assumed to be reliable, the Engineer will not be responsible for the accuracy of this information nor for errors or omissions which may appear in the record document as a result thereof.

REDRAWN FOR RECORD PURPOSES

REVISION	STATUS	DATE	DESCRIPTION	BY
2	AS-BUILT	12/95	RECORD DRAWING	DEW
1	FOR BID	2/15/95	MODIFIED DRAIN LINES	KW

DEXTER NATIONAL FISH HATCHERY AND TECHNOLOGY CENTER – PHASE I

FISH CULTURE BUILDING – PLUMBING PLAN

M 3

DATE	DESIGNED	DRAWN	CHECKED	DRAWING NO.
NOV. 1993	DEW	RNF	DEW	S.E.C. – NM – 133 – 136.1

LEEDSHILL-HERKENHOFF, INC. ENGINEERS SANTA FE ALBUQUERQUE ARCHITECTS SAN DIEGO

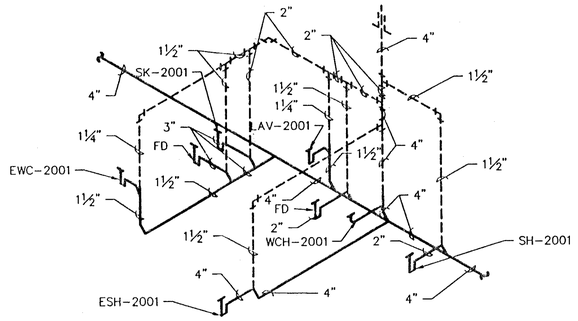

FISH CULTURE BUILDING – SOIL & VENT RESTROOM AREA

1 / M3 M6

SCALE: NONE

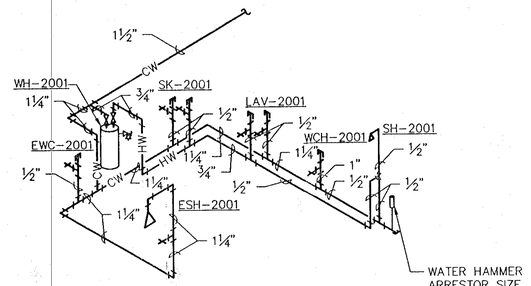

FISH CULTURE BUILDING – PLUMBING RESTROOM AREA

2 / M3 M6

SCALE: NONE

GENERAL NOTES

1. PROVIDE MINIMUM 18" CAPPED RISER ON ALL FIXTURE CONNECTIONS.
2. WATER HAMMER ARRESTORS ARE BASED ON JAY R. SMITH HYDROTROL ARRESTORS.
3. CONTROL CONTRACTOR TO PROVIDE ALL DEVICES AND WIRING FOR COMPLETE AND OPERABLE CONTROL SYSTEM.

KEYED NOTES ⬡

1 / 1

1 REMOVE DROPS AND ROUTE NEW PIPING AS SHOWN.

2 CUT-IN NEW TEE FOR HEAT EXCHANGE PIPING.

3 BLANK OFF LOUVER EXCEPT FOR 36"x30" SECTION AT TOP OF LOUVER, AND 36"x30" SECTION AT BOTTOM OF LOUVER.

4 PRESSURE REGULATOR SIZED FOR 2000 CFH @ 30 PSIG INLET AND 8 OZ OUTLET PRESSURE.

5 6" BOILER VENT UP TO 2'-0" ABOVE ROOF OR OBSTRUCTION WITHIN 10'-0" OF VENT. TERMINATE WITH VENT CAP AS SPECIFIED.

6 FOR HEATING WATER PIPING SCHEMATIC, SEE SHEET M3.

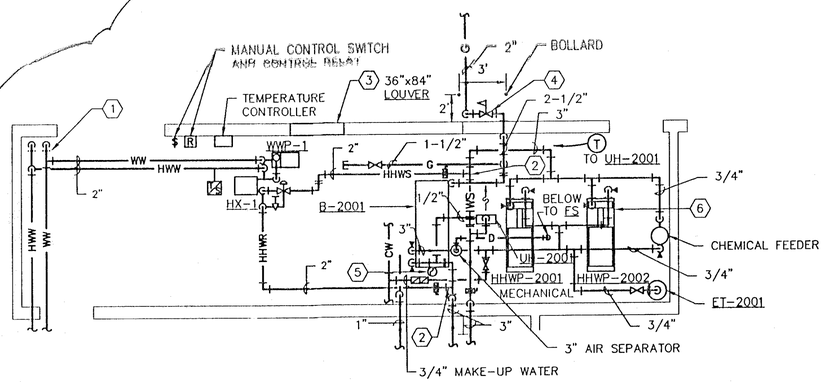

ENLARGED MECHANICAL ROOM PLAN

3 / M2 M6

SCALE: 1/4" = 1'-0"

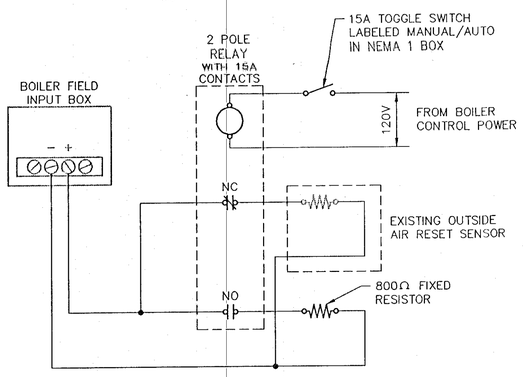

BOILER CONTROL MODIFICATION SCHEMATIC

4 / M6 M6

SCALE: NONE (CONTROL CONTRACTOR TO PROVIDE SWITCH, RELAY AND WIRING)

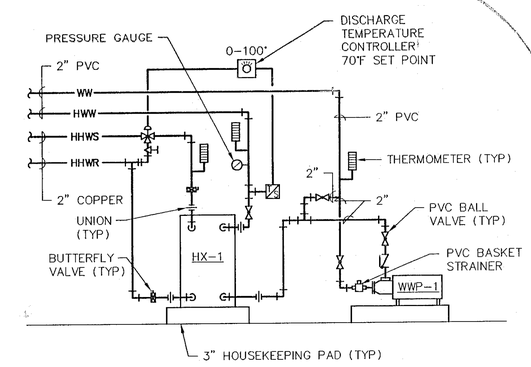

HEAT EXCHANGER PIPING SCHEMATIC

5 / M6 M6

SCALE: NONE

1 2

RECORD DRAWING

Date DEC 1995

These drawings have been revised based on the construction records of the owner while the information submitted by the Owner will be assumed to be reliable, the Engineer will not be responsible for the accuracy of this information nor for errors or omissions which may appear in the record document as a result thereof

REDRAWN FOR RECORD PURPOSES

0 1 2 3 4
METERS (A.F.S.)
0 2' 4' 8' 12'
1/4" = 1'-0" (A.F.S.)

48/90024.JSMD2/DEXISO/12-04-95/SJH

REVISION	STATUS	DATE	DESCRIPTION	BY
2	AS-BUILT	12/95	RECORD DRAWING	DEW

DEXTER NATIONAL FISH HATCHERY AND TECHNOLOGY CENTER – PHASE I

MECHANICAL ISOMETRICS

M 6

DATE	DESIGNED	DRAWN	CHECKED	DRAWING NO.
NOV. 1993	DEW	BP	I.I.F	S.E.C. – NM – 133 – 139.0

LEEDSHILL-HERKENHOFF, INC. ENGINEERS ALBUQUERQUE ARCHITECTS SANTA FE SAN DIEGO

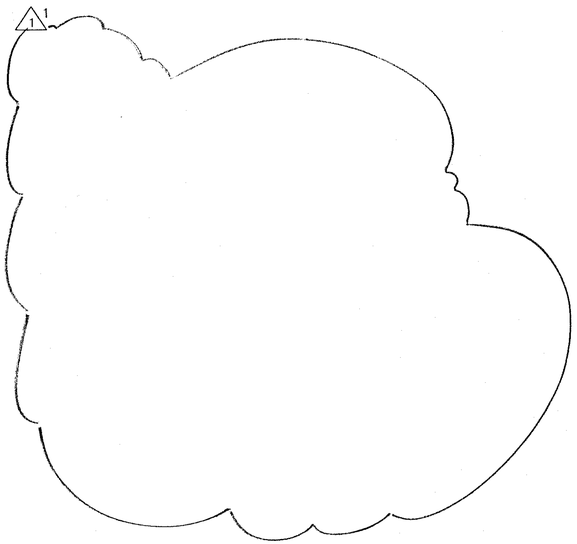

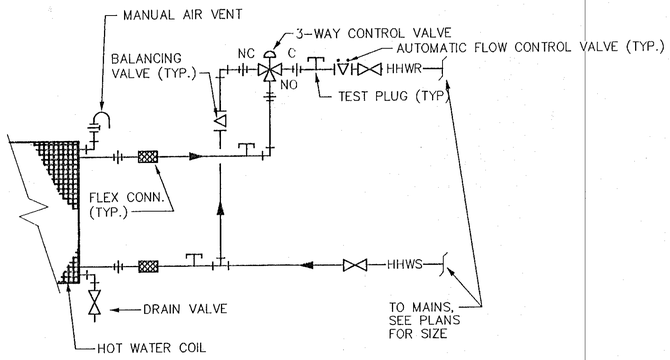

HOT WATER COIL PIPING SCHEMATIC

2 — SCALE: NONE

M2 M7

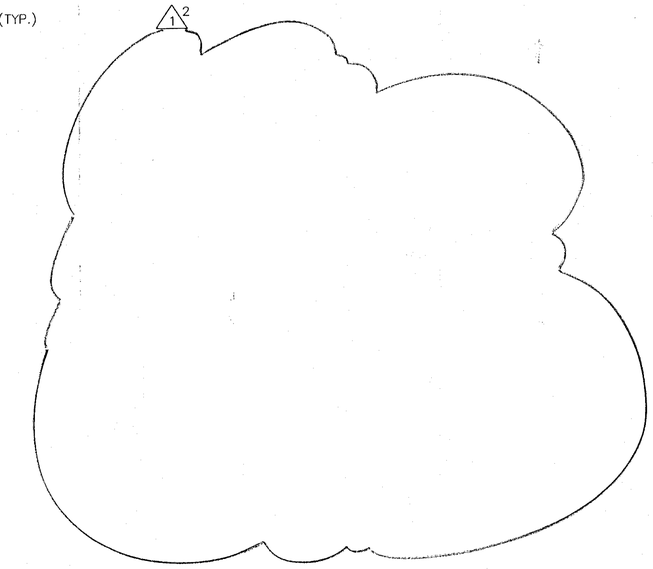

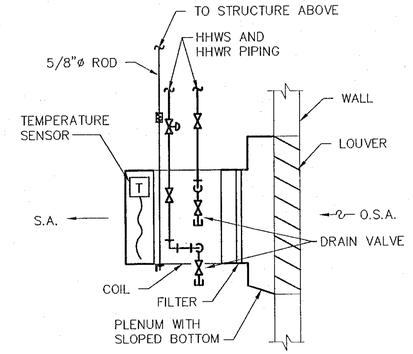

LOUVER AND COIL DETAIL

4 — NOT TO SCALE

M2 M7

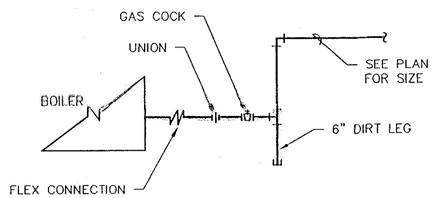

GAS CONNECTION DETAIL

5 — NOT TO SCALE

M2 M4 M7

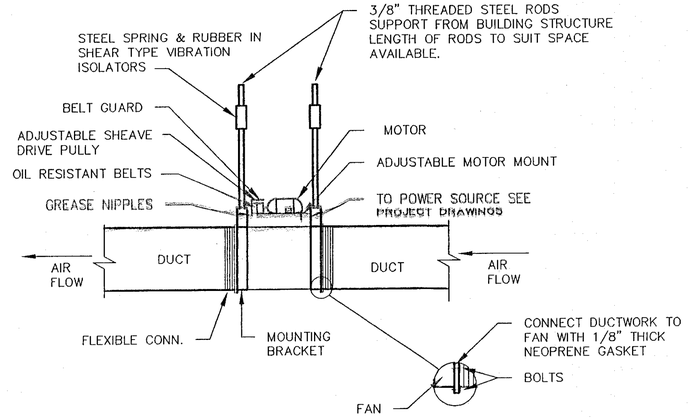

INLINE FAN DETAIL

6 — NOT TO SCALE

M2 M7

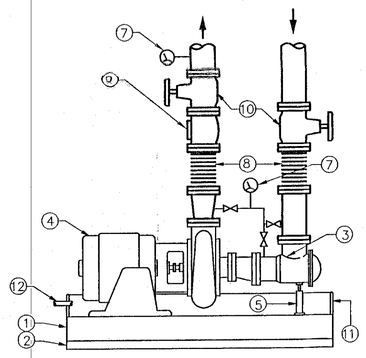

① PUMP BASE
② SHEARFLEX PAD.
③ SUCTION DIFFUSER WITH STRAINER.
④ HIGH EFFICIENCY MOTOR.
⑤ ADJUSTABLE SUPPORT LEG.
⑥ (NOT USED)
⑦ PRESSURE GAUGE, 0-60 PSI
⑧ METRAFLEX METRASPHERE (OR EQUAL)
⑨ NON-SLAM SPRING CHECK VALVE.
⑩ BUTTERFLY VALVE
⑪ DRAIN PAN
⑫ DRAIN PIPE (IF REQUIRED).

PUMP AND BASE DETAIL

7 — NOT TO SCALE

M2 M7

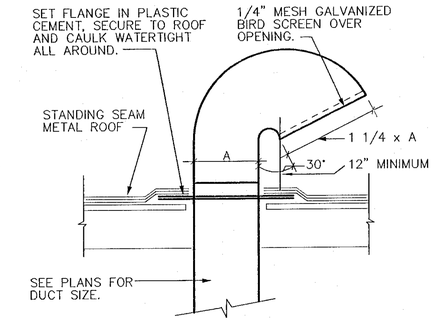

GOOSENECK DETAIL

8 — NOT TO SCALE

M2 M4 M7

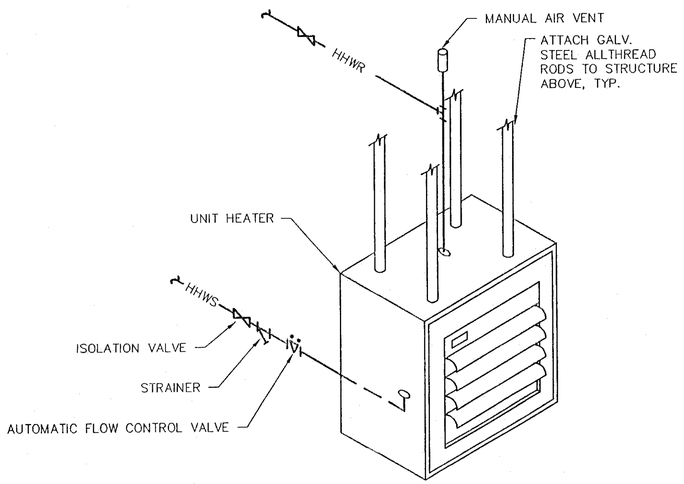

UNIT HEATER DETAIL

9 — NOT TO SCALE

M2 M4 M7

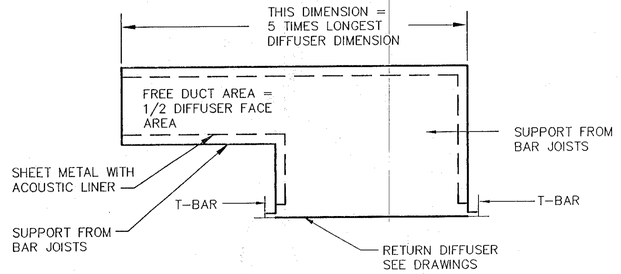

RETURN AIR TO PLENUM DETAIL

10 — NOT TO SCALE

M2 M4

RECORD DRAWING

Date DEC 1995

Those drawings have been revised based on the construction records of the owner. While the information submitted by the Owner will be assumed to be reliable, the Engineer will not be responsible for the accuracy of this information nor for errors or omissions which may appear in the record document as a result thereof

REDRAWN FOR RECORD PURPOSES

1/90024.35MD2/DTL1/12-04-95/SJH

REVISION	STATUS	DATE	DESCRIPTION	BY
2 / 1	AS-BUILT	12/95	RECORD DRAWING	DEW

DEXTER NATIONAL FISH HATCHERY AND TECHNOLOGY CENTER - PHASE I

MECHANCAL HVAC DETAILS

M 7

DATE	DESIGNED	DRAWN	CHECKED	DRAWING NO.
NOV. 1993	DEW	RNF	DEW	S.E.C. - NM - 133 - 140.0

SHEET 41 OF 64

LEEDSHILL-HERKENHOFF, INC.
ENGINEERS ALBUQUERQUE SANTA FE ARCHITECTS SAN DIEGO

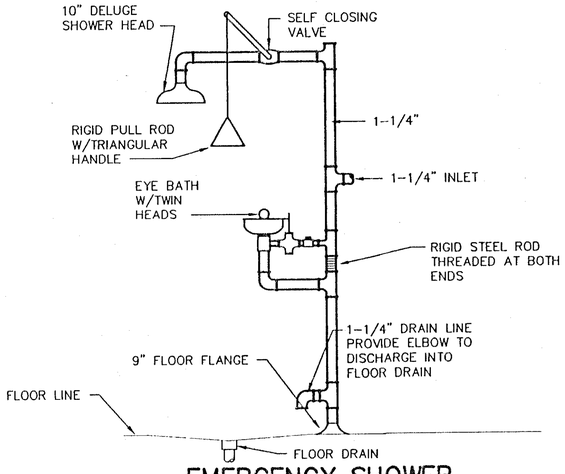

EMERGENCY SHOWER & EYE-WASH DETAIL

1 NOT TO SCALE

M3 M5 M8

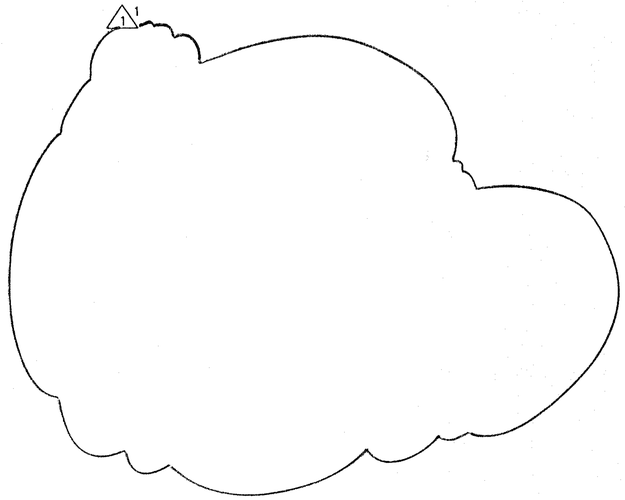

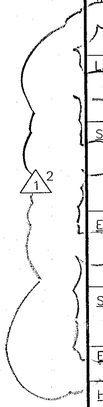

FIXTURE SCHEDULE *

SYMBOL	DESCRIPTION
WCH-2001	WATER CLOSET: WALL HUNG, ELONGATED, VITREOUS CHINA WATER CLOSET SLOAN ROYAL NO 110-3 FLUSH VALVE. CHURCH NO 9500 C OPEN FRONT SEAT LESS COVER WITH 3140 STAINLESS STEEL HINGE POST WITH CONCEALED CHECK. ZURN ZR-1204 ADJUSTABLE CARRIER. MOUNT 18" FROM FLOOR TO TOP OF RIM.
LAV-2001	LAVATORY: WALL HUNG VITREOUS CHINA WITH FRONT OVERFLOW, AMERICAN STANDARD MODEL 2000.100 FAUCET WITH 2.5 GPM FLOW GRID STRAINER AND TAILPIECE. ZURN ZR-1231 CONCEALED ARM LAVATORY SUPPORT. PROVIDE "P" TRAP AND WALL STOPS.
SK-2001	JANITOR'S MOP BASIN: CORNER MOUNTED MOP BASIN. ACID RESISTING ENAMELED CAST IRON. AMERICAN STANDARD FAUCET WITH TOP BRACE, STOPS AND VACUUM BREAKER, AMERICAN STANDARD DRAIN WITH STRAINER AND SOCKET FOR 3" OUTLET. PROVIDE "P" TRAP AND STOPS.
EWC-2001	ELECTRIC WATER COOLER: WALL HUNG, WITH FRONT PUSH BAR. CAPACITY 7.6 GPH OF 50°F DRINKING WATER BASED ON 90°F ROOM TEMPERATURE, AND 80°F INLET WATER. 1/5 HP. MOUNT 34" FROM FINISH FLOOR TO TOP OF RIM. PROVIDE "P" TRAP AND WALL STOPS.
SH-2001	SHOWER: 3' ACRYLIC SHOWER STALL WITH OBSCURE GLASS DOOR AND DOME LIGHT. AMERICAN STANDARD PRESSURE BALANCED MIXING VALVES AD-JUSTABLE SHOWER HEAD WITH 2.5 GPM RESTRICTOR, ARM, AND FLANGE.
ESH-2001	EMERGENCY SHOWER AND EYE WASH STATION: WITH SEPERATE PUSH-DOWN VALVES, FREE STANDING, DUST COVER PROTECTED HEADS.
HB	HOSE BIBB: HOSE BIBB WITH VACUUM BREAKER.
WH	WALL HYDRANT: ZURN 3/4" NON-FREEZE EXPOSED WITH NICKEL BRONZE FACE AND VACUUM BREAKER.
CO	CLEANOUT: CAST IRON CLEANOUT WITH ADJUSTABLE ROUND TOP.
FD	FLOOR DRAIN: FLOOR DRAIN WITH ALUMINUM DOME STRAINER. CAST IRON DRAIN BODY CONSTRUCTION WITH COMBINATION MEMBRANE FLASHING CLAMP AND ANCHORING FLANGE. ADJUSTABLE TYPE NICKEL BRONZE STRAINER AND VANDAL PROOF SCREWS.
FS	FLOOR SINK: CAST IRON FLANGED RECEPTOR WITH ACID RESISTANT COATED INTERIOR AND ALUMINUM DOME BOTTOM STRAINER.

* MODEL NUMBERS AND MANUFACTURERS LISTED ARE TO ESTABLISH QUALITY STANDARD. REFER TO SPECIFICATIONS FOR SELECTED MANUFACTURERS.

NOTE: WEIGHT OF STACK SHALL BE SUPPORTED INDEPENDENT OF FLASHING AND APPLIANCE.

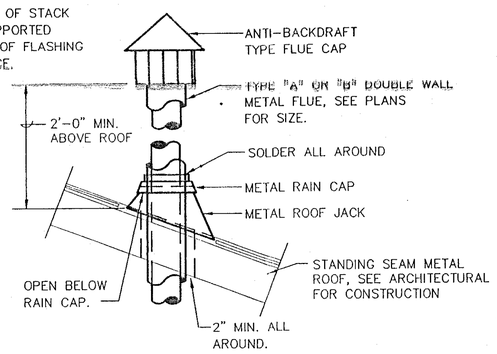

FLUE THRU PITCHED ROOF

3 NOT TO SCALE

M2 M4 M8

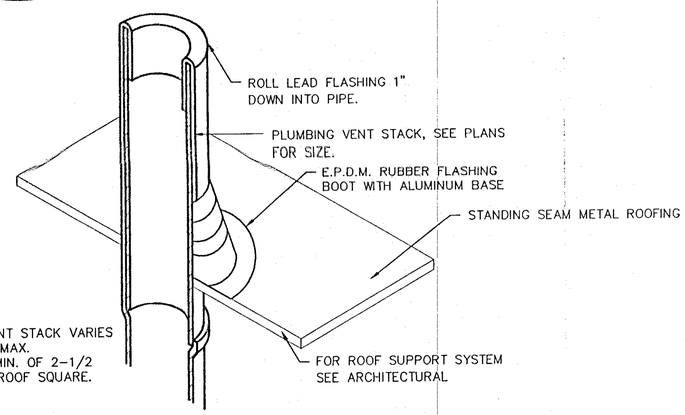

NOTE:
1. HEIGHT OF VENT STACK VARIES 8" (MIN), 10" MAX.
2. SHEET LEAD MIN. OF 2-1/2 POUNDS PER ROOF SQUARE.

VENT THRU ROOF DETAIL

4 NOT TO SCALE

M3 M5 M6 M8

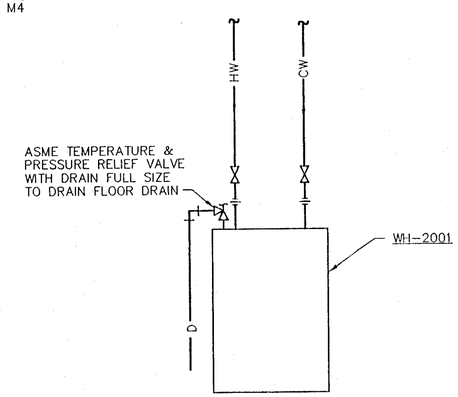

ELECTRIC WATER HEATER DETAIL

5 NOT TO SCALE

M3 M8

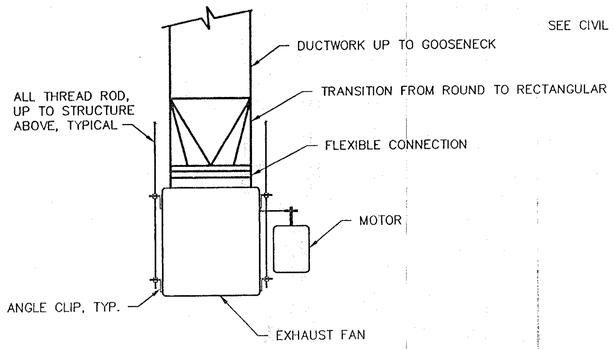

VERTICALLY MOUNTED IN-LINE EXHAUST FAN

6 NOT TO SCALE

M2 M8

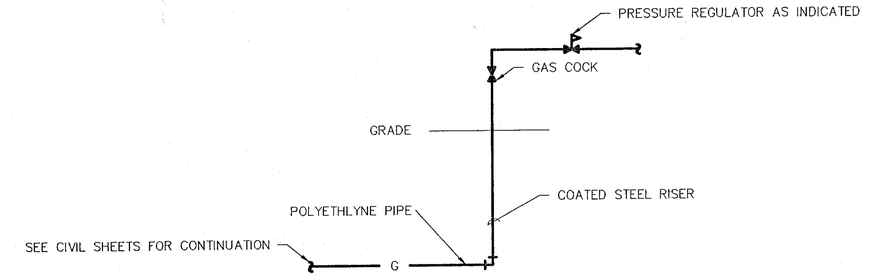

GAS RISER DETAIL

7 NOT TO SCALE

M2 M4 M8

RECORD DRAWING
Date DEC 1995

These drawings have been revised based on the construction records of the owner. While the information submitted by the Owner will be assumed to be reliable, the Engineer will not be responsible for the accuracy of this information nor for errors or omissions which may appear in the record document as a result thereof

REDRAWN FOR RECORD PURPOSES

1/90024.35MD2/DTL2/12-04-95/SJH

REVISION	STATUS	DATE	DESCRIPTION	BY
2 / 1	AS-BUILT	12/95	RECORD DRAWING	DEW

DEXTER NATIONAL FISH HATCHERY AND TECHNOLOGY CENTER - PHASE I

MECHANICAL PLUMBING DETAILS AND FIXTURE SCHEDULE

M 8

DATE	DESIGNED	DRAWN	CHECKED	DRAWING NO.
NOV. 1993	DEW	RNF	DEW	S.E.C. - NM - 133 - 141.0

SHEET 42 OF 64

LEEDSHILL-HERKENHOFF, INC. ENGINEERS SANTA FE ARCHITECTS SAN DIEGO ASSOCIATE

HYDRONIC UNIT HEATER SCHEDULE

SYMBOL	CFM @ 3500	HP	VOLT/ PHASE	AMPS	RPM	EWT=180°F LWT=160°F			WEIGHT (LBS.)	MAXIMUM MNTG. HGT. (FT)	MIN. THROW (FT)	DELIVERY TYPE	MANUFACTURER
						GPM	P.D. (FT)	MBH					
UH-2001	340	1/40	115/1	0.80	1550	1.3	0.5	12.8	18	9	16	HORIZONTAL	MODINE
UH-2002	950	1/30	115/1	2.05	1050	3.0	0.6	30	42	–	24	VERTICAL	MODINE ①
UH-2003 THRU 8 & 2010	1120	1/12	115/1	3.0	1550	4.7	0.8	47	58	8	40	HORIZONTAL	MODINE
UH-2009	3240	1/3	115/1	5.4	1550	13.5	7.9	133	105	10	60	HORIZONTAL	MODINE
UH-2011	370	1/25	115/1	1.6	1075	1.6	0.8	15.7	21	9	20	HORIZONTAL	MODINE

① SUPPLY WITH ANEMOSTAT AIR DEFLECTOR.

HYDRONIC COIL SCHEDULE ①

SYMBOL	DIMENSIONS		SCFM	FACE VEL. ② (FT/MIN)	AIR P.D. @ 3500' (IN)	ENT. AIR TEMP. °F	LVG. AIR TEMP. °F	MBH	GPM	WATER P.D. (FT)	ROWS ③	EWT °F	LWT °F	MANUFACTURER
	HEIGHT (IN.)	LENTH (IN.)												
HC-2001	24	30	1478	296	.031	–7	65	117.3	12.0	.90	2	180	160	PACE
HC-2002	30	36	2478	330	.032	–7	65	198.4	20.0	2.05	2	180	160	PACE
HC-2003	18	24	601	200	.029	–7	65	47.5	5.0	.25	2	180	160	PACE

① INTERGRAL FACE AND BYPASS PREHEAT COIL DESIGN.
② FACE VELOCITIES BASED ON SCFM.
③ ROWS REQUIRED FOR 10 FINS PER INCH.

ELECTRIC HEATER SCHEDULE

SYMBOL	CFM @ 3500'	HP	VOLT/ PHASE	AMPS	RPM	MBH OUTPUT @ 7270'	KW INPUT	OPERATING WEIGHT (LBS)	MANUFACTURER AND MODEL NO.
EH-2001	–	–	120/1	–	–	1.25	①	–	CHROMALOX

① 750 WATTS.

AIR DEVICE SCHEDULE

SYMBOL	DESCRIPTION	FACE STYLE	NECK SIZE	FRAME	TYPE OF INSTALLATION	MODULE SIZE	ACCESSORIES	FINISH	MANUFACTURER
CD-2001	CEILING DIFFUSER	LOUVERED	SEE DWGS.	FLUSH FACE	LAY-IN	24"x24"	–	WHITE	TITUS
RG-2001	RETURN GRILLE	PERFORATED	SEE DWGS.	FLUSH FACE	LAY-IN	24"x24"	–	WHITE	TITUS

FAN SCHEDULE

SYMBOL	CFM @ 3500'	S.P. @ 3500' (IN. W.G.)	RPM	HP @ 3200'	VOLT/ PHASE	NO. OF FAN SPEEDS	ARRANGEMENT	MANUFACTURER
EF-2001, 2005	60	.25	1500	②	115/1	1	CEILING MNT.	GREENHECK ⑤
EF-2002	1975	.50	1975	1	460/3	1	IN-LINE	GREENHECK ①④
EF-2003	3340	.50	1340	1	460/3	1	IN-LINE	GREENHECK ①④
EF-2004	800	.50	2310	.50	115/1	1	IN-LINE	GREENHECK ④

① PROVIDE WITH INLET VANES TO VARY CFM FROM 2000 TO 6000 CFM.
② .45 AMPS, 37 WATTS, 2.4 SONES.
④ PROVIDE FANS WITH REMOVABLE SAFETY SCREEN ON INLET SIDE OF FAN.
⑤ WITH GREENHECK WLSP WALL LOUVER & DAMPER COMBINATION.

FAN COIL UNIT SCHEDULE

SYMBOL	S.P. @ 3500'	AMPS	WATTS	VOLT/ PHASE	RPM	SPD.	CFM @ 3500'	COOLING COIL DATA									HEATING COIL DATA								MANUFACTURER AND SERIES
								MBH	GPM	WPD (FT)	APD (W.C.)	EWT °F	LWT °F	EAT °F	LAT °F	ROWS	FACE VEL.	MBH	GPM	WPD (FT)	APD (W.C.)	EWT °F	LWT °F	EAT °F	LAT °F	ROWS	FACE VEL.	
FC-2001	.15	.90	255	120/1	––	3	685	16.0	DX	–	.20	40SST	–	78	55	3	500	26.5	2.0	2.7	.13	180	160	68	95	1	500	YORK

FIN TUBE SCHEDULE

SYMBOL	GPM	EWT °F	LWT °F	BTUH	REMARKS
FT-2001	1.0	180	160	2400	①

① 3"x3" ELEMENT WITH ENCLOSURE COMPLETE WITH END CAPS AND THERMOSTATIC REGULATING VALVE. PAINT TO MATCH WALL COLOR.

ELECTRIC WATER HEATER SCHEDULE

SYMBOL	VOLT/PH	HEATING ELEMENT WATTAGE	TANK CAPACITY (GALS.)	RECOVERY GPH @ 90°RISE	MANUFACTURER
WH-2001	240/1	4500	30	20.4	STATE TV301KRS

PUMP SCHEDULE

SYMBOL	GPM	TPH (FT)	RPM	HP	VOLT/PH	PUMP TYPE	MANUFACTURER
HHWP-2001	80	51	1800	2	460/3	BASE MNT.	ARMSTRONG
HHWP-2002	80	51	1800	2	460/3	BASE MNT.	ARMSTRONG

EXPANSION TANK SCHEDULE

SYMBOL	CAPACITY (GALS.)	ACCEPTANCE VOLUME (GALS.)	WORKING PRESSURE (PSIG)	SIZE		OPERATING WEIGHT (LBS)	MANUFACTURER
				DIA. (IN.)	HEIGHT (IN.)		
ET-2001	34	19	150	16	50	360	TACO

BOILER SCHEDULE

SYMBOL	OUTPUT MBH @ 1500'	VOLT/PH	FLOW RATE GPM	AFUE	WEIGHT (LBS.)	WATER CAPACITY (GALS.)	MANUFACTURER
B-2001	860	120/1	72	95	1200	23	AERCO KC ①

① WITH 4-20 Ma OUTSIDE AIR RESET CONTROL AND O.A. SENSOR.

PACKAGED AIR CONDITIONER SCHEDULE

SYMBOL	CFM @ 3500'	S.P. @ 3500'	HP	VOLT/ PHASE	RPM	SPD.	COOLING MBH	COOLING FLA	COND. FAN AMPS	COND. FAN WATTS	HEATING KWH	HEATING MBH	WEIGHT (LBS.)	MANUFACTURER
AC-2001	360	–	–	277/1	–	2	7.3	3.7	.5	108	2.4	8.2	215	AAF ① ②

① PACKAGED AIR CONDITIONER TO BE PROVIDED WITH LONG WALL SLEEVE.
② PROVIDE WITH 100% CAPACITY OUTSIDE AIR GRILLE.

AIR COOLED CONDENSING UNIT SCHEDULE

SYMBOL	NOMINAL CAP. TONS	VOLTAGE	PHASE	MCA	REMARKS
CU-2001	1.5	208	1	12.0	CARRIER, TRANE YORK WITH EXP. VALVE KIT

REDRAWN FOR RECORD PURPOSES

RECORD DRAWING
Date DEC 1995

These drawings have been revised based on the construction records of the owner. While the information submitted by the Owner will be assumed to be reliable, the Engineer will not be responsible for the accuracy of this information nor for errors or omissions which may appear in the record document as a result thereof

1/90024.35MD2/SCHE1/12-04-95/SJH

REVISION	STATUS	DATE	DESCRIPTION	BY
5	AS-BUILT	12/95	RECORD DRAWING	DEW

DEXTER NATIONAL FISH HATCHERY AND TECHNOLOGY CENTER – PHASE I

MECHANICAL EQUIPMENT SCHEDULES

M 9

DATE	DESIGNED	DRAWN	CHECKED	DRAWING NO.
NOV. 1993	DEW	RNF	DEW	S.E.C. – NM – 133 – 142.0

LEEDSHILL-HERKENHOFF, INC. ENGINEERS ALBUQUERQUE SANTA FE ARCHITECTS SAN DIEGO

FLOOR PLANS

SYMBOLS	DESCRIPTION
PP	480V 3–PHASE 3–WIRE PANELBOARD.
LP	480Y/277V 3–PHASE 4–WIRE PANELBOARD.
LP	208/120V 3–PHASE 4–WIRE PANELBOARD.
SSP	SURGE SUPPRESSOR PANEL.
TR/D	480–208/120V DRY–TYPE TRANSFORMER.
P	INDOOR SERVICE POLE.
	GENERAL PURPOSE DUPLEX RECEPTACLE. THE FOLLOWING CONVENTION APPLIES TO ALL RECEPTACLES: AC=ABOVE COUNTER. GFI=GROUND FAULT INTERRUPTER. WC=WATER COOLER. WP=WEATHERPROOF. IG=ISOLATED GROUND. E=SERVED FROM EMERGENCY POWER CIRCUIT. +42=MOUNT AT 42" AFF.
	SPECIAL PURPOSE RECEPTACLE, AS NOTED.
J	JUNCTION BOX
R	CORD REEL
C	CLOCK RECEPTACLE.
$	SINGLE POLE SWITCH. 3=THREE–WAY SWITCH D=WALL BOX DIMMER SWITCH M=MANUAL MOTOR STARTING SWITCH T=MANUAL MOTOR STARTER
T	THERMOSTAT, MOUNT AT 54" ABOVE FINISH FLOOR.
M	MOTOR.
	MULTI–OUTLET ASSEMBLY.
	SURFACE METAL RACEWAY.
	CABLE TRAY SYSTEM.
	CONDUIT – BELOW GRADE.
	CONDUIT – ABOVE GROUND
	CONDUIT TURNING UP
	CONDUIT TURNING DOWN
	CONDUIT RISER AND FLEXIBLE CONNECTION TO EQUIPMENT
LPA–7	CONDUIT HOMERUN TO SWITCHGEAR/SWITCHBOARDS/PANELBOARDS:
LPA–7	CIRCUIT NUMBER (SEE ONE LINE DIAGRAMS OR SCHEDULES).
	EQUIPMENT DESCRIPTION: E=ON EMERGENCY GENERATOR SYSTEM. SWG=SWITCHGEAR. LP=SWITCHBOARDS/PANELBOARDS. A, B, C, ETC=480/277 VOLT EQUIPMENT. 1, 2, 3, ETC=208/120 VOLT EQUIPMENT.
	BUILDING NUMBER NOT SHOWN ON CALLOUT. (CALLOUT FOR CIRCUIT 7 OF 1–LP–A WOULD BE LPA–7)
EMCCA–C2	CONDUIT HOMERUN TO MOTOR CONTROL CENTERS:
EMCCA–C2	CUBICLE NUMBER (SEE ONE LINE DIAGRAMS).
	EQUIPMENT DESCRIPTION: E=ON EMERGENCY GENERATOR SYSTEM. MCC=MOTOR CONTROL CENTER. A, B, C, ETC=480/277 VOLT EQUIPMENT. 1, 2, 3, ETC=208/120 VOLT EQUIPMENT.
	BUILDING NUMBER NOT SHOWN ON CALLOUT. (CALLOUT FOR CIRCUIT SERVED FROM CUBICLE C2 OF 3–EMCC–A WOULD BE EMCCA–C2)
WPCS–3C	CONDUIT HOMERUN TO OTHER LOCATION (SEE PLANS).
	CONDUIT TO OTHER LOCATION. (SEE KEYED NOTE.)
A	2x4 FLOURESCENT FIXTURE. THE FOLLOWING CONVENTION APPLIES TO ALL LIGHT FIXTURE SYMBOLS: UPPERCASE LETTER INDICATES TYPE. SEE FIXTURE SCHEDULE. LOWERCASE LETTER (WHERE USED) REFERS TO SWITCH CONTROLLING FIXTURE. SLASH (WHERE USED) INDICATES EMERGENCY BATTERY BACKUP.
A	1x4 FLOURESCENT FIXTURE.
A	HID OR INCANDESCENT FIXTURE. RECESSED OR PENDANT MOUNTED.
A	HID OR INCANDESCENT FIXTURE. WALL MOUNTED.
A	EXTERIOR BOLLARD TYPE FIXTURE.
	EXIT LIGHT FIXTURE. WALL MOUNT.
A	POLE MOUNTED FIXTURE.

SYMBOLS	DESCRIPTION
	LIGHTNING PROTECTION SYSTEM AIR TERMINAL AND THRU–THE–ROOF CONNECTOR WITH CONDUCTOR EXTENDED TO NEAREST STRUCTURAL STEEL AND BONDED WITH MECHANICAL FITTING.
	GROUND ROD WITH EXOTHERMIC CONNECTION TO CONDUCTOR.
	GROUND COUNTERPOISE SYSTEM CONDUCTOR
	LIGHTNING PROTECTION SYSTEM CONDUCTORS
	GROUND COUNTERPOISE SYSTEM CONNECTION, MECHANICAL.
	GROUND COUNTERPOISE SYSTEM CONNECTION, EXOTHERMIC.
A	DISCONNECT SWITCH (SEE SCHEDULE FOR DESCRIPTION).
	MAGNETIC CONTACTOR.
	MOTOR STARTER.
	COMBINATION MOTOR STARTER.
ECB	ENCLOSED CIRCUIT BREAKER.
	CONTROL STATION, MOUNT AT 54" ABOVE FINISH FLOOR.
	PHOTOCONTROLLER.
	TELEPHONE OUTLET BOX. THE FOLLOWING CONVENTION APPLIES TO ALL OUTLET BOXES: F=FLOOR MOUNT. AC=ABOVE COUNTER. +54=MOUNT AT 54" AFF.
	TELEPHONE/DATA OUTLET BOX.
	SPECIAL PURPOSE OUTLET BOX. (SEE PLANS FOR DESCRIPTION)
W	REMOTE VOLUME CONTROL, WALL MOUNT.
PA	P/A SYSTEM RACK ASSEMBLY.
PC	P/A SYSTEM SPEAKER. ENCLOSED TYPE. CEILING MOUNT.
PW	P/A SYSTEM SPEAKER. ENCLOSED TYPE. WALL MOUNT.
PH	P/A SYSTEM SPEAKER. HORN TYPE. WALL MOUNT.
FCP	FIRE ALARM SYSTEM CONTROL PANEL.
RAP	FIRE ALARM SYSTEM REMOTE ANNUNCIATOR PANEL.
F	FIRE ALARM SYSTEM MANUAL PULL STATION, MOUNT AT 48" ABOVE FINISH FLOOR.
I	FIRE ALARM SYSTEM SMOKE DETECTOR, IONIZATION TYPE.
T	FIRE ALARM SYSTEM HEAT DETECTOR, COMBINATION TYPE.
DI	FIRE ALARM SYSTEM DUCT SMOKE DETECTOR, IONIZATION TYPE.
RTS	FIRE ALARM SYSTEM DUCT SMOKE DETECTOR REMOTE TEST STATION.
PS	SPRINKLER SYSTEM PRESSURE SWITCH.
PIV	SPRINKLER SYSTEM POST INDICATOR VALVE SUPERVISORY SWITCH.
WF	SPRINKLER SYSTEM WATER FLOW SWITCH.
EOL	FIRE ALARM SYSTEM END OF LINE TERMINATING DEVICE.
EOR	FIRE ALARM SYSTEM END OF LINE SUPERVISORY RELAY.
FH	FIRE ALARM SYSTEM HORN/STROBE UNIT, WALL MOUNT 8'–0" ABOVE FINISH FLOOR OR 6" BELOW CEILING WHICH EVER IS LOWER.
W	WATER PROCESS CONTROL SYSTEM BELL/STROBE UNIT, WALL MOUNT.

SITE PLANS

SYMBOLS	DESCRIPTION
	OVERHEAD LINE.
	UNDERGROUND LINE.
EP	PRIMARY ELECTRICAL.
ES	SECONDARY ELECTRICAL.
TS	TELEPHONE SYSTEM.
SS	SPECIAL SYSTEMS. (SEE PLANS FOR DESCRIPTION.)
CS	CONTROL SYSTEMS. (SEE PLANS FOR DESCRIPTION.)
	PRIMARY POWER POLE.
	PRIMARY POWER POLE DOWN GUY.
	PRIMARY POWER POLE DEADEND ASSEMBLY.
	PRIMARY POWER POLE DOUBLE DEADEND ASSEMBLY.
T	PADMOUNTED TRANSFORMER.
S	PADMOUNTED PRIMARY MANUAL TRANSFER SWITCH.

CONTROL SCHEMATICS

SYMBOLS	DESCRIPTION
	FUSE.
	CIRCUIT BREAKER.
	DISCONNECT SWITCH.
	GROUND CONNECTION.
	MAINTAINED RED MUSHROOM HEAD PUSHBUTTON SWITCH.
	MAINTAINED SELECTOR SWITCH, NORMALLY CLOSED.
	MAINTAINED SELECTOR SWITCH, NORMALLY OPEN.
	MOMENTARY PUSHBUTTON SWITCH, NORMALLY CLOSED.
	MOMENTARY PUSHBUTTON SWITCH, NORMALLY OPEN.
	PRESSURE SWITCH, NORMALLY CLOSED.
	PRESSURE SWITCH, NORMALLY OPEN.
	LEVEL SWITCH.
	POSITION SWITCH.
	LIMIT SWITCH, NORMALLY CLOSED.
	LIMIT SWITCH, NORMALLY OPEN.
	TEMPERATURE SWITCH, NORMALLY CLOSED.
	TEMPERATURE SWITCH, NORMALLY OPEN.
	RELAY, CONTACTOR, OR TIMER CONTACT, NORMALLY CLOSED.
	RELAY, CONTACTOR, OR TIMER CONTACT, NORMALLY OPEN.
	TIMED CONTACT, NORMALLY OPEN TIMED CLOSED.
	TIMED CONTACT, NORMALLY CLOSED TIMED OPEN.
OL	OVERLOAD RELAY CONTACT, NORMALLY CLOSED.
	MOTOR STARTER OVERLOAD RELAY ELEMENT.
	MOTOR INTERNAL THERMAL SWITCHES, NORMALLY CLOSED.
	SOLENOID VALVE COIL.
	RELAY, CONTACTOR, OR TIME CLOCK COIL. R=GENERAL PURPOSE RELAY. TD=TIME DELAY. RELAY. TC=TIME CLOCK. C=CONTACTOR.
R	INDICATOR LAMP. R=RED LENS. G=GREEN LENS. Y=YELLOW LENS. F=FLASHING LAMP.
	FIELD DEVICE TERMINATION.
	FIELD WIRING.
	INTERNAL WIRING.
M	CONTACTOR MECHANICAL INTERLOCK.
ETM	ELAPSED TIME METER.
	VIBRATION METER.
M	MOTOR.
	HEATING ELEMENT.

NOTE: ALL SYMBOLS MAY NOT BE USED ON THIS PROJECT.

ONE LINE DIAGRAMS

SYMBOLS	DESCRIPTION
	RISER OR DIP POLE.
	FUSE.
	DISCONNECT SWITCH.
	CIRCUIT BREAKER, FIXED MOUNTING.
K	KIRK–KEY INTERLOCK.
	GROUND CONNECTION.
	POTENTIAL TRANSFORMER.
	CURRENT TRANSFORMER.
A	AMMETER W/SELECTOR SWITCH.
V	VOLTMETER W/SELECTOR SWITCH.
W	WATTMETER.
PF	POWER FACTOR METER.
M	METERING.
JT	WATT TRANSDUCER.
PMX	PROGRAMMABLE MULTI–FUNCTION METERING SYSTEM CIRCUIT MONITOR.
LDU	PROGRAMMABLE MULTI–FUNCTION METERING SYSTEM LOCAL DISPLAY UNIT.
PMR	POWER MONITOR RELAY.
2	FVNR MOTOR STARTER WITH NEMA SIZE.
1	FVNR MOTOR STARTER (NO OVERLOAD) WITH NEMA SIZE.
1	FVNR–2S TWO–SPEED MOTOR STARTER WITH NEMA SIZE.
V	VFD MOTOR STARTER.
1	VFD MOTOR STARTER BYPASS ISOLATION SWITCH.
M	MOTOR.
G	GENERATOR.
	GROUND COUNTERPOISE SYSTEM CONDUCTOR.
	GROUNDED CONDUCTOR.
	GROUNDING CONDUCTOR.
	ISOLATED GROUND BUS.
	NEUTRAL BUS.
	GROUND BUS.
	PIPE CLAMP.

OTHER SYMBOLS

SYMBOLS	DESCRIPTION
	KEYED NOTES
	CONDUIT DESCRIPTION NUMBER (SEE CONDUIT SCHEDULE SHEET E2)

GENERAL NOTES

1 SEE LEGEND ON SHEET M1 FOR HVAC SYSTEMS RELATED EQUIPMENT.

RECORD DRAWING
Date DEC 1995
These drawings have been revised based on the construction records of the owner. While the information submitted by the Owner will be assumed to be reliable, the Engineer will not be responsible for the accuracy of this information nor for errors or omissions which may appear in the record document as a result thereof

1/90024.31ED3/DEXTLEG/11–18–93/SJH

DENNEY R. HOWARD NEW MEXICO 11375 REGISTERED PROFESSIONAL ENGINEER 12/14/93

REVISION	STATUS	DATE	DESCRIPTION	BY
1	AS–BUILT	12/95	RECORD DRAWING	WDG

DEXTER NATIONAL FISH HATCHERY AND TECHNOLOGY CENTER – PHASE I

ELECTRICAL LEGEND

DATE	DESIGNED	DRAWN	CHECKED	DRAWING NO.
NOV. 1993	DAD/WDG	PDS	DAD/DRH	S.E.C. – NM – 133 – 143.0

E 1

SHEET 44 OF 64

LEEDSHILL–HERKENHOFF, INC.
ARCHITECTS SAN DIEGO
ENGINEERS SANTA FE
ALBUQUERQUE

ABBREVIATIONS

ABBREVIATION	DESCRIPTION
AE	FLOOD DETECTOR ELEMENT
AEH	FLOOD DETECTOR SOLID STATE RELAY
AFF	ABOVE FINISH FLOOR
AFG	ABOVE FINISH GRADE
AG	ABOVE GROUND
AUX	AUXILIARY
BKR	CIRCUIT BREAKER
C	CONDUIT
CKT	CIRCUIT
FE	FLOW ELEMENT
FIT	WATER METER/PULSER
FLEX	LIQUID-TIGHT FLEXIBLE METAL CONDUIT
FM	FLOW METER
FS	NO FLOW SWITCH
FSK-R	FREQUENCY SHIFT KEYING RECEIVER
FSK-T	FREQUENCY SHIFT KEYING TRANSMITTER
FVNR	FULL VOLTAGE NON-REVERSING
FVR	FULL VOLTAGE REVERSING
GFI	GROUND FAULT CIRCUIT INTERUPTER
GRD	GROUNDING CONDUCTOR OR GROUND
HID	HIGH INTENSITY DISCHARGE
HOA	HAND-OFF-AUTO SWITCH
HS	HAND SWITCH FOR START-STOP OPERATION
IG	ISOLATED GROUND
JC	DC POWER SUPPLY
LE	LEVEL ELEMENT (ELECTRODE PROBE)
LS	LEVEL SWITCH
LSHA	HIGH LEVEL SENSOR ALARM AND SOLID STATE RELAY (RESERVOIR OVERFLOW DETECTION)
MCB	MAIN CIRCUIT BREAKER
MLO	MAIN LUG ONLY
NC OR N/C	NORMALLY CLOSED
NIC	NOT IN CONTRACT
NO OR N/O	NORMALLY OPEN
OL	MOTOR STARTER OVERLOAD ELEMENT
PG	PRESSURE GAUGE
PSL	PRESSURE SWITCH LOW
VFD	VARIABLE FREQUENCY DRIVE

CONDUIT/CONDUCTOR CALLOUT DESCRIPTION

BUILDING WIRE TYPE CALLOUT:

(2) 1-1/4"C, 4#2, 1#8 GRD

- (2) = NUMBER OF CONDUIT (DEFAULT = 1)
- 4 = NUMBER OF PHASE/NEUTRAL CONDUCTORS IN EACH CONDUIT
- 1 = NUMBER OF GROUND CONDUCTORS IN EACH CONDUIT
- 8 = GROUND CONDUCTOR SIZE
- 2 = PHASE/NEUTRAL CONDUCTOR SIZE
- 1-1/4"C = CONDUIT SIZE

CONTROL CABLE TYPE CALLOUT:

(2) 3/4"C, (2) TYPE "A" CONTROL CABLE, 1#14 GRD

- (2) = NUMBER OF CONDUIT (DEFAULT = 1)
- 2 = NUMBER OF CABLES IN EACH CONDUIT
- 1 = NUMBER OF GROUND CONDUCTORS IN EACH CONDUIT
- 14 = GROUND CONDUCTOR SIZE
- TYPE "A" CONTROL CABLE = CABLE DESCRIPTION (SEE SPECIFICATION)
- 3/4"C = CONDUIT SIZE

REFERENCE "BUBBLE" DESCRIPTION

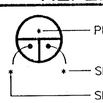

LIGHT FIXTURE SCHEDULE

SYMBOL	DESCRIPTION	MANUFACTURERS REFERENCE	LAMPS	BALLAST
A	RECESSED GRID TYPE "STRIP" FIXTURE WITH SILVER FINISH REFLECTOR	METALUX NO. RCG-SS-248-277V	(2)T8 3500K	2-LAMP ELECTRONIC
B	NOT USED			
C2	PENDANT MOUNTED, HEAVY DUTY INDUSTRIAL	METALUX NO. DIM-240-277V	(2)T8 3500K	2-LAMP ELECTRONIC
D	PENDANT MOUNTED, INDUSTRIAL VAPORTIGHT	METALUX NO. VT-240-DR-277V	(2)T8 3500K	2-LAMP ELECTRONIC
F2	RECESSED, FLANGED, DEEP REGRESSED WITH BLADE BAFFLES	LITECONTROL NO. RX-D-66N24-277V	(2)T8 3500K	2-LAMP ELECTRONIC
H	HEAVY DUTY QUARTZ FLOODLIGHT	LUMARK NO. QB-500-120V	(1)350W T3 QUARTZ	NONE
S	SHOWER LIGHT	HALO H-275-7IPS	13W	HPF
V	DIE-CAST ALUMINUM WALL-PAK WITH GLASS REFRACTOR	LUMARK NO. HPWL-150	150W HPS	

NOTE: SEE SPECIFICATION SECTION 16510 FOR EXIT LIGHT FIXTURE DESCRIPTION AND SCHEDULE OF INSTALLATION.

CONDUIT SCHEDULE

NO	DESCRIPTION	RATING
1	(1) 1 1/2"C, 3#4, 14#8 GRD	85A
2	(1) 3"C, 4#350 MCM, 1#1/0 GRD	310A
3	(1) 4"C, 3#2/0 15 KV	225A
4	(1) 4"C, 4#4/0, 1#2 GRD	230A
5	NOT USED	
6	(1) 2 1/2"C, 4#4/0, 1#2 GRD	230A
7	NOT USED	
9	NOT USED	
10	NOT USED	
11	(1) 1 1/2"C, 4#2, 1#6 GRD	115A
13	(1) 1"C, 4#6, 1#8 GRD	60A
14	(1) 3/4"C, 3#6, 1#8 GRD	60A
15	NOT USED	
16	NOT USED	
17	(1) 3/4"C, 3#10, 1#10 GRD	30A

NOTE: CONDUIT DESCRIBED IN SPECIFICATION SECTION 16111.

DISCONNECT SWITCH SCHEDULE

SYMBOL	DESCRIPTION
A	30A, FUSIBLE, 3ø, 480V
B	30A, FUSIBLE, 3ø, 208V
C	NOT USED
D	NOT USED

PROVIDE FUSES PER EQUIPMENT MANUFACTURER'S RECOMMENDATIONS.

RECORD DRAWING

Date DEC 1995

These drawings have been revised based on the construction records of the owner. While the information submitted by the Owner will be assumed to be reliable, the Engineer will not be responsible for the accuracy of this information nor for errors or omissions which may appear in the record document as a result thereof.

REDRAWN FOR RECORD PURPOSES

1/90024.31ED3/DEXTLEGA/12-07-95/SJH

REVISION	STATUS	DATE	DESCRIPTION	BY
3	AS-BUILT	12/95	RECORD DRAWING	WDG
1		12/94	REPLACE POLE MOUNTED WITH PAD MOUNTED TRANSFORMER	

DEXTER NATIONAL FISH HATCHERY AND TECHNOLOGY CENTER - PHASE I

ELECTRICAL LEGEND

E 2

DATE	DESIGNED	DRAWN	CHECKED	DRAWING NO.
NOV. 1993	DAD/WDG	PDS	DAD/DRH	S.E.C. - NM - 133 - 144.0

LEEDSHILL-HERKENHOFF, INC. ENGINEERS ALBUQUERQUE SANTA FE ARCHITECTS SAN DIEGO

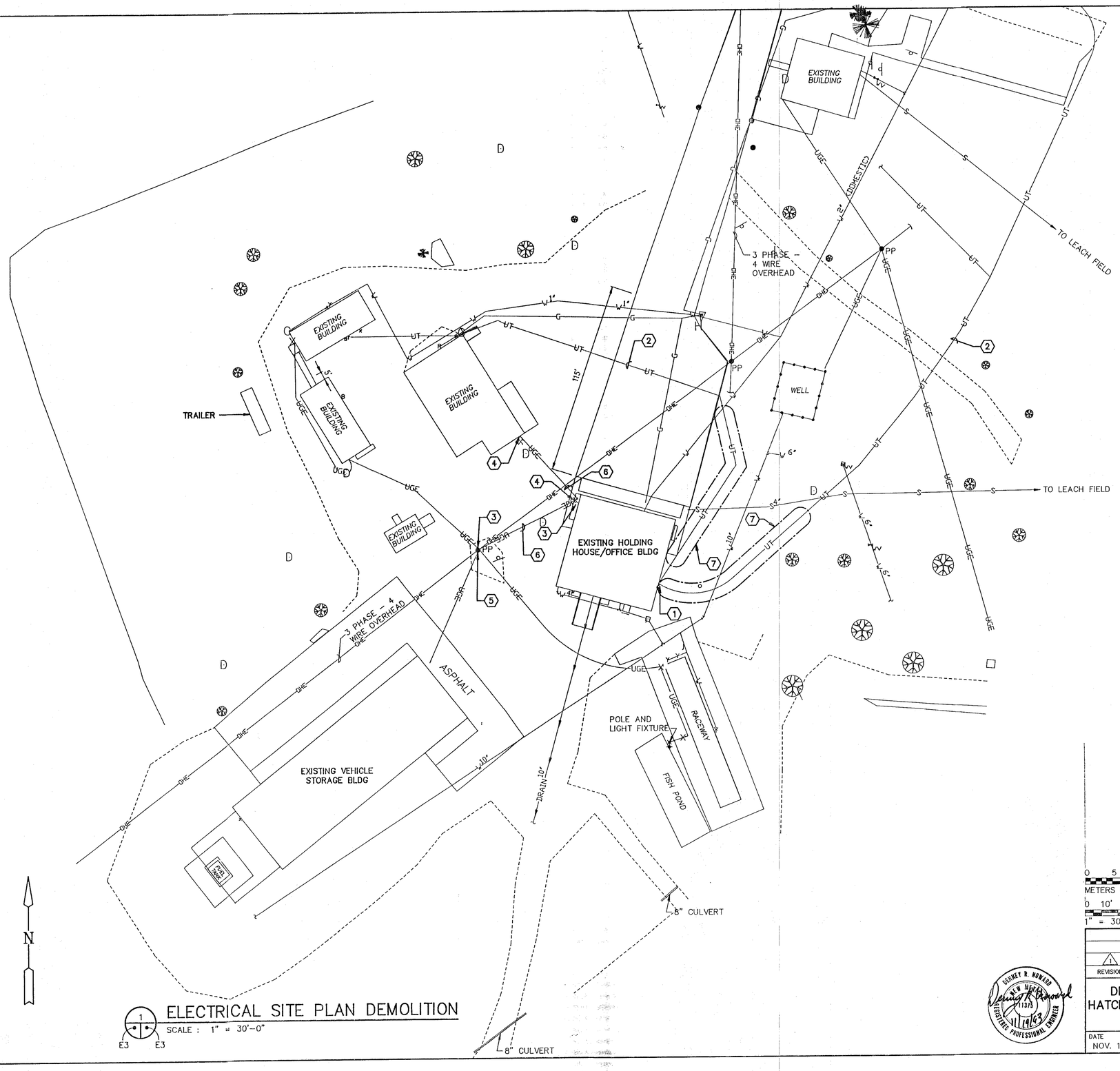

KEYED NOTES ⬡

1 DISCONNECT TELEPHONE CABLES IN JUNCTION BOXES. REMOVE JUNCTION BOXES. REMOVE CABLE AND CONDUIT TO 1'–0" BELOW GRADE.

2 ABANDON IN PLACE.

3 DISCONNECT POWER TO BUILDING. REMOVE FEEDER CONDUCTOR AND WIRE FROM POLE. REMOVE SERVICE ENTRANCE EQUIPMENT FROM BUILDING. REMOVE EXTERIOR CONDUIT AND WIRE FROM BUILDING. LEAVE DISCONNECT AND RISER ON POLE FOR REUSE, SEE SHEET E4.

4 DISCONNECT POWER FEEDER. REMOVE EXTERIOR CONDUIT AND WIRE TO 1'–0" BELOW GRADE.

5 LEAVE EXISTING POLE MOUNTED TRANSFORMERS AND SECONDARIES (EXCEPT AS NOTED IN ⟨3⟩).

6 ABANDON CONDUIT BELOW GRADE AND REMOVE CONDUCTORS.

7 REMOVE DIRECT BURIED TELEPHONE CABLES WHERE LOCATED UNDER NEW BUILDING. SEE SHEET E4.

ELECTRICAL SITE PLAN DEMOLITION

1 / E3 E3 SCALE : 1" = 30'–0"

0 5 10 20 30
METERS (A.F.S.)
0 10' 30' 60' 90'
1" = 30'–0" (A.F.S.)

RECORD DRAWING
Date DEC 1995
These drawings have been revised based on the construction records of the owner. While the information submitted by the Owner will be assumed to be reliable, the Engineer will not be responsible for the accuracy of this information nor for errors or omissions which may appear in the record documents thereof.

30/90024.31ED3/SITEDEMO/11–18–93/PCS

REVISION	STATUS	DATE	DESCRIPTION	BY
1	AS–BUILT	12/95	RECORD DRAWING	WDG

DEXTER NATIONAL FISH HATCHERY AND TECHNOLOGY CENTER – PHASE I

ELECTRICAL SITE PLAN DEMOLITION

E 3

DATE	DESIGNED	DRAWN	CHECKED	DRAWING NO.
NOV. 1993	DAD/WDG	PCS	DAD/DRH	S.E.C. – NM – 133 – 145.0

DEREK R. HOWARD NEW MEXICO 13175 REGISTERED PROFESSIONAL ENGINEER 11/19/93

LEEDSHILL–HERKENHOFF, INC. ENGINEERS ALBUQUERQUE SANTA FE ARCHITECTS SAN DIEGO

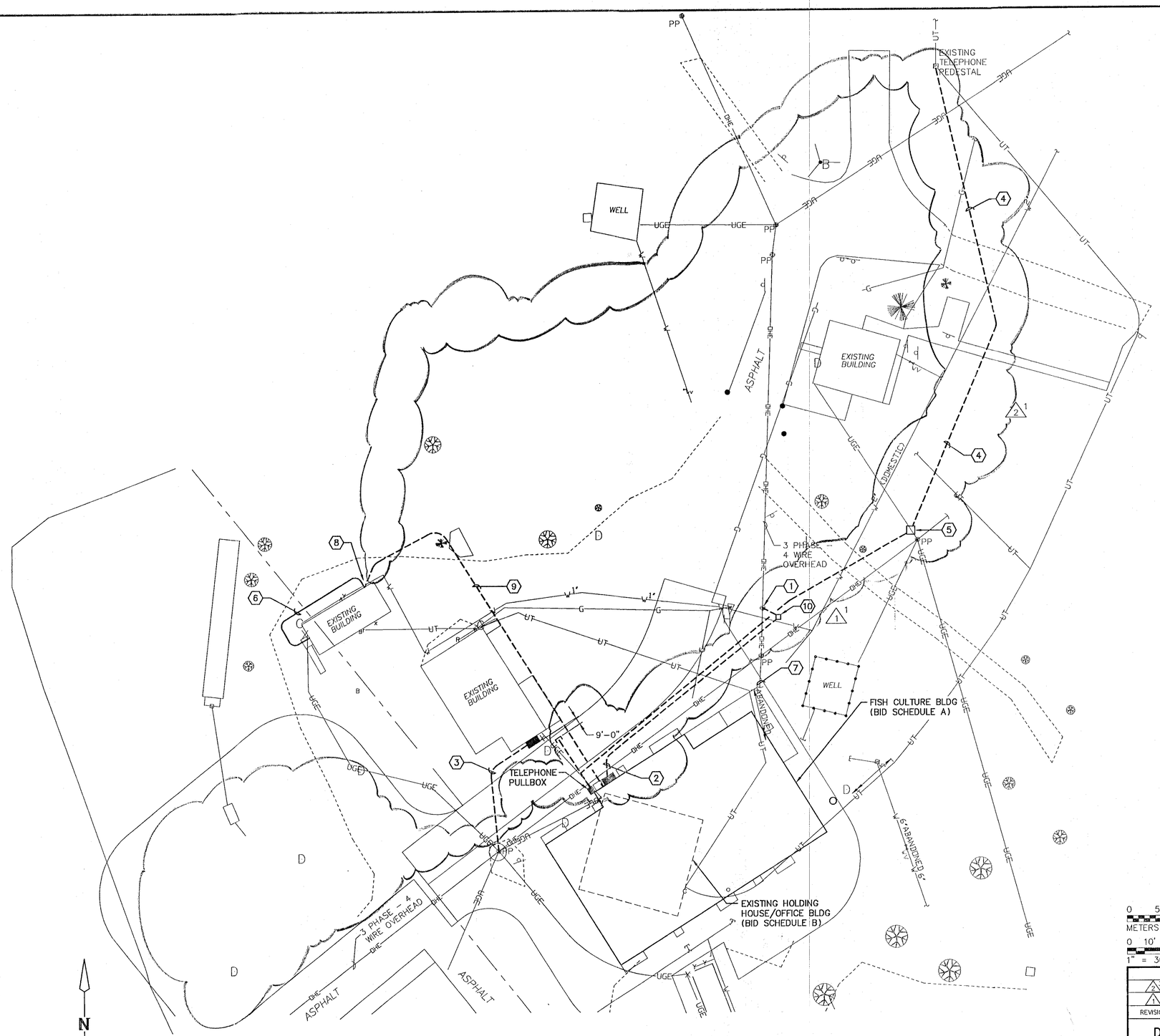

1 ELECTRICAL SITE PLAN
SCALE : 1" = 30'-0"
E4 E4

REDRAWN FOR RECORD PURPOSES

GENERAL NOTES

A FOR DETAILS OF SERVICE CONDUCTORS, SEE ONE LINE, SHEET E5.

BID SCHEDULE A KEYED NOTES

1 INSTALL NEW 35'-0" WOOD POLE IN EXISTING 3 PHASE OVERHEAD LINE.

2 INSTALL UNDERGROUND CIRCUIT FROM FUSIBLE DISCONNECT AT PAD MOUNTED TRANSFORMER TO NON-FUSIBLE DISCONNECT AT BUILDING. FOR ONE LINE, SEE SHEET E5.

3 INSTALL UNDERGROUND 120/240V SERVICE FROM EXISTING DISCONNECT SWITCH ON POLE TO EXISTING METER ON BUILDING. INSTALL NEW 70A FUSES IN DISCONNECT.

4 1"C WITH PULLWIRE. TELEPHONE CABLE BY US WEST.

5 INSTALL NOMINAL 12" X 12" X 12" UNDERGROUND ENCLOSURE.

6 INSTALL 3/4"C, 1#6 GRD FROM TELEPHONE SERVICE POINT TO GROUND BUS IN BUILDING DISCONNECT. INSTALL APPROXIMATELY 18" ABOVE GRADE ON EXTERIOR OF BUILDING.

7 REMOVE GUY AFTER COMPLETION OF WORK IN NOTE 1.

8 NETWORK JUNCTION BOX AND INCOMING WIRE TERMINATION BY US WEST. REWIRE THREE INTERIOR PHONES TO NETWORK JUNCTION BOX USING 4 PAIR TELEPHONE CABLE, SURFACE MOUNTED.

9 6 PAIR DIRECT BURY TELEPHONE CABLE. TERMINATE ON US WEST NETWORK JUNCTION BOX.

10 APPROXIMATE LOCATION OF NEW PAD MOUNT TRANSFORMER. COORDINATE WITH OWNERS REPRESENTATIVE.

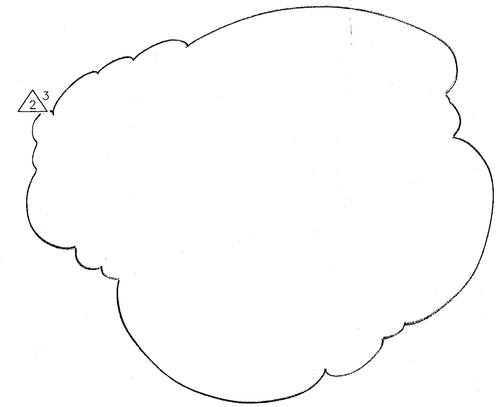

0 5 10 20 30
METERS (A.F.S.)
0 10' 30' 60' 90'
1" = 30'-0" (A.F.S.)

RECORD DRAWING
Date DEC 1995
These drawings have been revised based on the construction records of the owner While the information submitted by the Owner will be assumed to be reliable, the Engineer will not be responsible for the accuracy of this information nor for errors or omissions which may appear in the record document as a result thereof

30/90024.31ED3/EDEXSITE/12-06-95/SJH

REVISION	STATUS	DATE	DESCRIPTION	BY
2/3	AS-BUILT	12/95	RECORD DRAWING	WDG
1/3		12/94	REPLACE POLE MOUNTED WITH PAD MOUNTED TRANSFORMER	

DEXTER NATIONAL FISH HATCHERY AND TECHNOLOGY CENTER - PHASE I

ELECTRICAL SITE PLAN

DATE	DESIGNED	DRAWN	CHECKED	DRAWING NO.
NOV. 1993	DAD/WDG	PCS	DAD/DRH	S.E.C. - NM - 133 - 146.0

E 4

LEEDSHILL-HERKENHOFF, INC. ENGINEERS SANTA FE ARCHITECTS SAN DIEGO ALBUQUERQUE

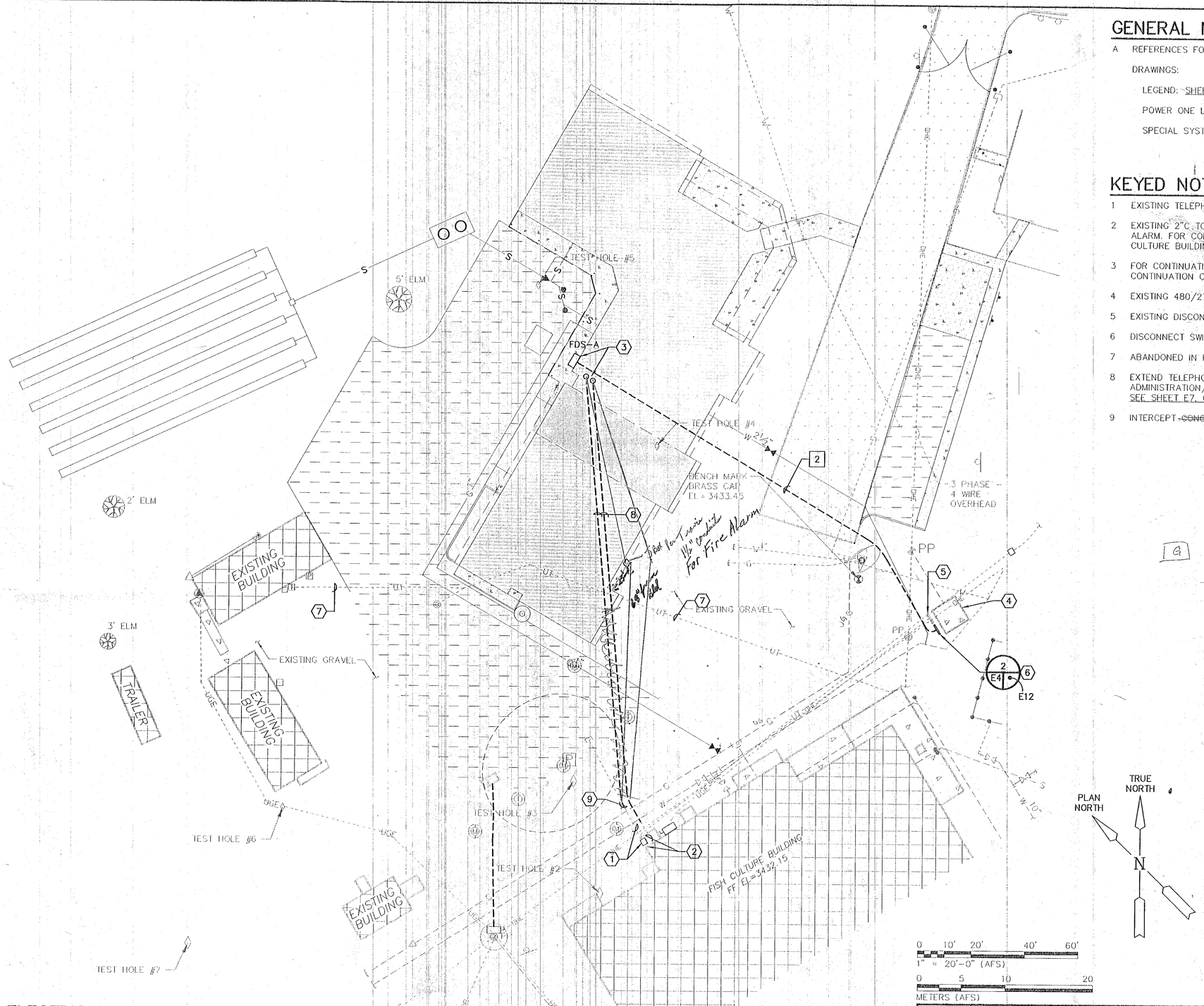

ELECTRICAL SITE PLAN

SCALE: 1" = 20'

E4 E4

GENERAL NOTES

A REFERENCES FOR WORK ON THIS SHEET:

DRAWINGS:

LEGEND: SHEETS E1 AND E2.

POWER ONE LINE DIAGRAMS: SHEETS E5 AND E6.

SPECIAL SYSTEMS ONE LINE DIAGRAMS: SHEET E7.

KEYED NOTES

1 EXISTING TELEPHONE JUNCTION BOX AND ~~2~~ 1½" C STUBBED-OUT.

2 EXISTING 2"C TO TELEPHONE EQUIPMENT AND FIRE ALARM. FOR CONTINUATION AND ADDITIONAL WORK IN FISH CULTURE BUILDING, SEE SHEET E12, DETAIL 4.

3 FOR CONTINUATION OF POWER, SEE SHEET E8. FOR CONTINUATION OF SPECIAL SYSTEMS, SEE SHEET E11.

4 EXISTING 480/277V PAD MOUNTED TRANSFORMER.

5 EXISTING DISCONNECT SWITCH FOR FISH CULTURE BUILDING.

6 DISCONNECT SWITCH FOR ADMINISTRATION/LABORATORY BUILDING

7 ABANDONED IN PLACE.

8 EXTEND TELEPHONE AND FIRE ALARM CONDUITS INTO ADMINISTRATION/LABORATORY BUILDING. FOR CONDUCTORS, SEE SHEET E7, ONE LINE DIAGRAMS.

9 INTERCEPT ~~CONCRETE ENCASED~~ ~~2~~ 1½" C, EXTEND TO NEW LOCATION.

G GM — — G — — —

DAVID A. DOZIER NEW MEXICO 9985 REGISTERED PROFESSIONAL ENGINEER

4.20.95

20/90024.37ED2/DEXSITE/04-20-95/PDS

REVISION	STATUS	DATE	DESCRIPTION	BY

DEXTER NATIONAL FISH HATCHERY AND TECHNOLOGY CENTER – PHASE II

ELECTRICAL SITE PLAN

E 4

DATE	DESIGNED	DRAWN	CHECKED	DRAWING NO.
APRIL 1995	DAD/WDG	SJH	DAD/JCK	S.E.C. – NM – 133 – 209

SHEET 46 OF 60

HOLLOWAY-SHILL-HERKENHOFF INC.
ENGINEERS ARCHITECTS
ALBUQUERQUE SANTA FE SAN DIEGO

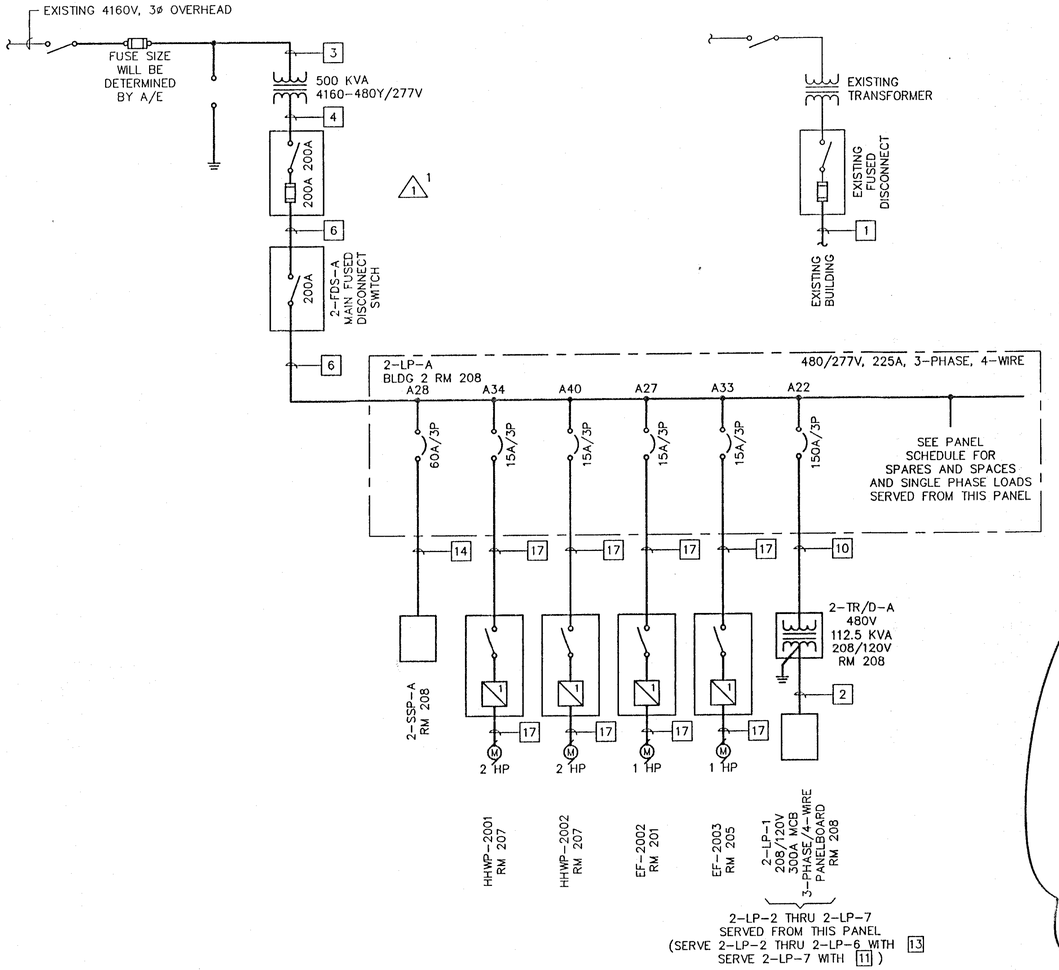

FISH CULTURE BUILDING ONE LINE

NO SCALE

E5 E5

GENERAL NOTES

1. REFERENCES FOR WORK ON THIS SHEET:

   DRAWINGS:

   LEGEND: SHEETS E1 AND E2.

   CONDUIT SCHEDULES: SHEET E2.

2. LOCAL SAFETY DISCONNECT SWITCHES AND MANUAL MOTOR STARTING SWITCHES NOT SHOWN ON ONE LINE DIAGRAMS. SEE POWER PLANS FOR LOCATIONS.

3. ROUTE SWITCHGEAR, SWITCHBOARD, AND PANELBOARD FEEDERS BELOW GRADE.

RECORD DRAWING

Date DEC 1995

These drawings have been revised based on the construction records of the owner. While the information submitted by the Owner will be assumed to be reliable, the Engineer will not be responsible for the accuracy of this information nor for errors or omissions which may appear in the record document as a result thereof.

REDRAWN FOR RECORD PURPOSES

1/90024.31ED3/DEXTONE/12-05-95/PCS

REVISION	STATUS	DATE	DESCRIPTION	BY
2	AS-BUILT	12/95	RECORD DRAWING	WDG
1		12/94	REPLACE POLE MOUNTED WITH PAD MOUNTED TRANSFORMER	

DEXTER NATIONAL FISH HATCHERY AND TECHNOLOGY CENTER – PHASE I

POWER SYSTEM ONE LINE

DATE	DESIGNED	DRAWN	CHECKED	DRAWING NO.
NOV. 1993	DAD/WDG	PDS	DAD/DRH	S.E.C. – NM – 133 – 147.0

E 5

LEEDSHILL-HERKENHOFF, INC.
ENGINEERS ALBUQUERQUE
ARCHITECTS SANTA FE SAN DIEGO

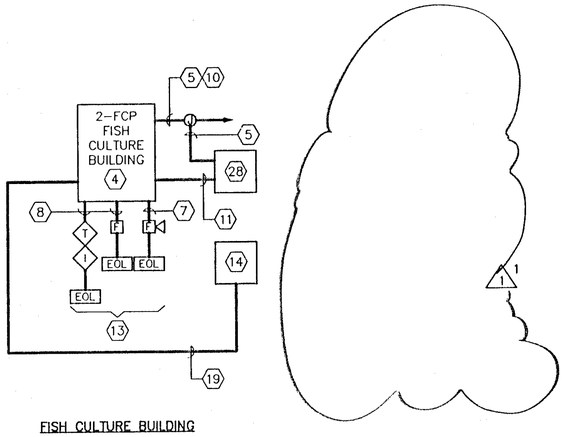

FISH CULTURE BUILDING

FIRE ALARM SYSTEM ONE LINE DIAGRAM

NO SCALE

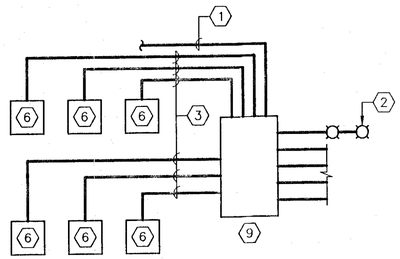

DIMMER ONE LINE (FISH CULTURE BUILDING)

NO SCALE

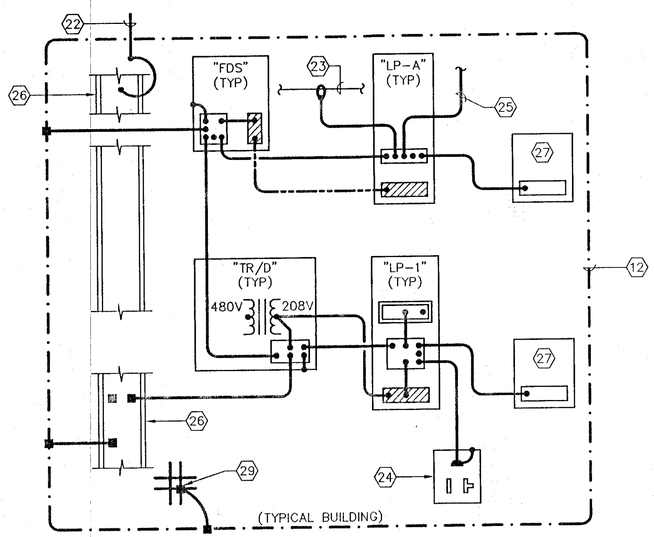

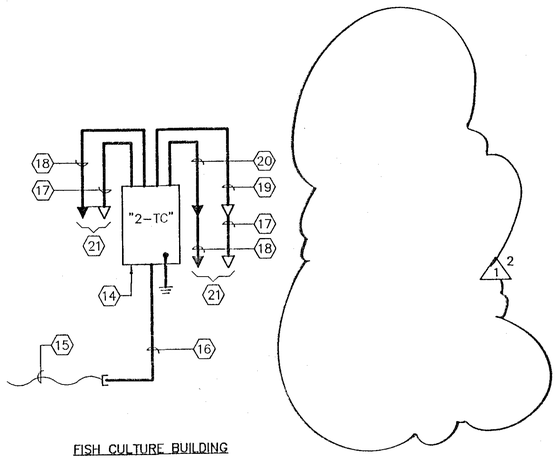

FISH CULTURE BUILDING

TELEPHONE/DATA COMMUNICATION SYSTEM ONE LINE DIAGRAM

NO SCALE

LIGHTNING PROTECTION/GROUNDING SYSTEM ONE LINE DIAGRAM

NO SCALE

GENERAL NOTES

1. REFERENCES FOR WORK ON THIS SHEET:

   DRAWINGS:

   LEGEND: SHEETS E1 AND E2.

   CONDUIT SCHEDULES: SHEET E2.

   SPECIFICATIONS:

   16123: CONTROL, ALARM, PUBLIC ADDRESS SYSTEMS WIRE/CABLE DESCRIPTIONS.

   16741: TELEPHONE/DATA SYSTEMS CABLE DESCRIPTIONS.

KEYED NOTES ⬡

1 208V, 3ø INPUT, 2LP1-21.

2 LIGHTS, TYPICAL, 120V.

3 LOW VOLTAGE WIRING IN ACCORDANCE WITH MANUFACTURER IN MINIMUM 1/2"C.

4 FIRE ALARM CONTROL PANEL AND ASSOCIATED DEVICES.

5 120 VAC INPUT.

6 DIMMER CONTROL STATION (1 CHANNEL).

7 1/2"C, 2#12 (TYPICAL SIGNAL CIRCUIT).

8 1/2"C, 2#14 (TYPICAL INITIATING CIRCUIT).

9 DIMMER CABINET (6 CHANNEL, 20A INCANDESCENT).

10 1/2"C, 2#12, 1#12 GRD (POWER).

11 1/2"C, 2#14 (AUTODIALER OUTPUT).

12 GROUND COUNTERPOISE SYSTEM CONDUCTOR.

13 SEE FLOOR PLANS FOR NUMBER OF DEVICES REQUIRED.

14 TELEPHONE CABINET.

15 6 PR "DIRECT BURY TELEPHONE CABLE".

16 2"C, STUBBED-OUT FROM BUILDING.

17 3/4"C, (1) 4 PR "TELEPHONE CABLE".

18 3/4"C, (1) "DATA CABLE", (1) 4 PR "TELEPHONE CABLE".

19 1"C, (2) 4 PR "TELEPHONE CABLE".

20 1"C, (2) DATA, (2) 4 PR "TELEPHONE CABLE".

21 SEE FLOOR PLANS FOR NUMBER OF OUTLETS REQUIRED.

22 AIR TERMINAL (TYPICAL).

23 COLD WATER METALLIC MAIN INSIDE BUILDING.

24 STANDARD RECEPTACLE (TYPICAL).

25 TO TELEPHONE ROOM BACKBOARD AND FIRE ALARM EQUIPMENT BOND.

26 BUILDING STEEL (TYPICAL).

27 SURGE SUPRESSION PANEL, WHERE USED.

28 AUTO DIALER.

29 BOND FOUNDATION REBAR ON NORTH AND SOUTH ENDS OF ROOMS 201, 205 AND 206 OF THE FISH CULTURE BUILDING.

RECORD DRAWING

Date DEC 1995

These drawings have been revised based on the construction records of the owner While the information submitted by the Owner will be assumed to be reliable, the Engineer will not be responsible for the accuracy of this information nor for errors or omissions which may appear in the record document as a result thereof

REDRAWN FOR RECORD PURPOSES

1/9002431ED1/DEXONEA/12-05-93/PCS

REVISION	STATUS	DATE	DESCRIPTION	BY
2	AS-BUILT	12/95	RECORD DRAWING	WDG

DEXTER NATIONAL FISH HATCHERY AND TECHNOLOGY CENTER - PHASE I

SPECIAL SYSTEMS ONE LINE DIAGRAMS

E 6

DATE	DESIGNED	DRAWN	CHECKED	DRAWING NO.
NOV. 1993	DAD/WDG	PDS	DAD/DRH	S.E.C. - NM - 133 - 148.0

LEEDSHILL-HERKENHOFF, INC. ENGINEERS ALBUQUERQUE SANTA FE ARCHITECTS SAN DIEGO

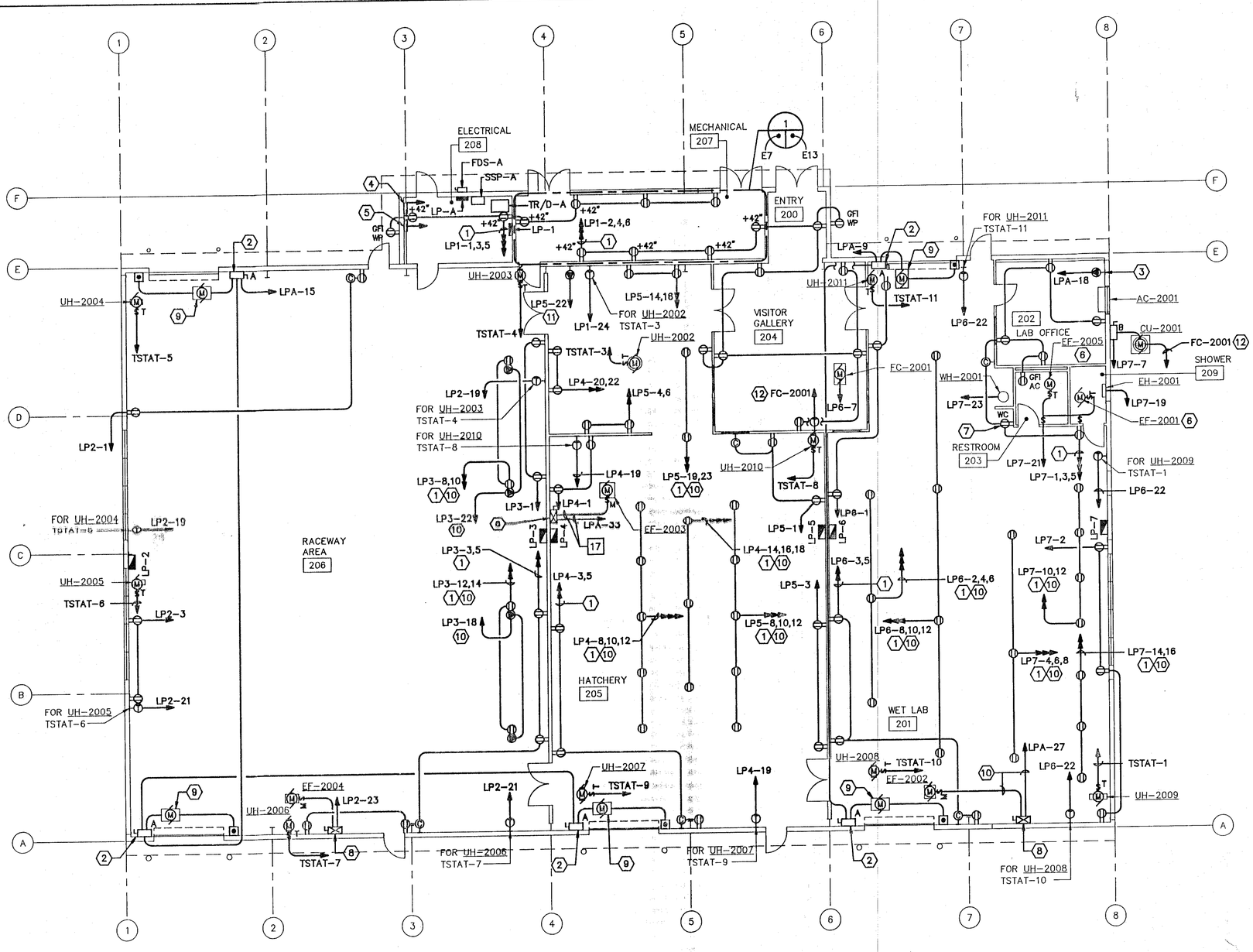

GENERAL NOTES

1. REFERENCES FOR WORK ON THIS SHEET:

   DRAWINGS:

   LEGEND: SHEETS E1 AND E2.

   CONTROL SCHEMATIC REFERENCE SCHEDULES: SHEET E18.

   DISCONNECT SWITCH SCHEDULE: SHEET E2.

   POWER ONE LINE: SHEETS E5.

   SPECIFICATIONS:

   16141: WIRING DEVICE SCHEDULE.

3. FEEDER CONDUIT NOT SHOWN ON POWER PLANS. FOR FEEDER DESCRIPTIONS SEE POWER ONE LINE DIAGRAMS ON SHEET E5.

4. SEE SPECIFICATION SECTIONS 16111 AND 16123 FOR CONDUIT/CONDUCTOR SIZING AND CIRCUITING REQUIREMENTS OF BRANCH CIRCUITS WITHOUT CALLOUTS ON THE DRAWINGS.

6. MOTOR OPERATED DAMPERS INTEGRAL TO ROOF-MOUNTED EXHAUST FANS AND ASSOCIATED LIMIT SWITCH, LOCAL DISCONNECT SWITCH, AND CONDUIT/CONDUCTOR HAVE NOT BEEN SHOWN ON PLANS. SEE CONTROL SCHEMATICS TO IDENTIFY EXHAUST FANS WHICH HAVE MOTOR OPERATED DAMPERS.

7. ALL CONDUIT, RECEPTACLES AND RELATED CIRCUITING MOUNTED ON TRAPEZE HANGER IS BID SCHEDULE A, ADDITIVE BID ITEM #1

KEYED NOTES ⬡

1 CONNECT RECEPTACLES ON ALTERNATE CIRCUITS.

2 MOUNT DISCONNECT ADJACENT TO DOOR OPERATOR.

3 20A, 277V, 2 PHASE, 3 WIRE, NEMA 7-20R, AIR CONDITIONER RECEPTACLE. WIRE WITH 2#10, 2#10 GRD.

4 FIRE ALARM PANEL, HARDWIRED FROM CIRCUIT LP1-9.

5 POWER STRIP IN TELEPHONE CABINET, SERVED FROM CIRCUIT LP1-11.

6 EXHAUST FAN CONTROLLED BY LIGHT SWITCH. SEE CONTROL SCHEMATIC NO 9A.

7 COORDINATE WITH WATER COOLER FURNISHED UNDER SECTION 15440 TO CONCEAL RECEPTACLE. CONNECT TO DEDICATED CIRCUIT LP7-5.

8 COMBINATION MOTOR STARTER/DISCONNECT SWITCH.

9 MAKE CONNECTION TO OVERHEAD DOOR OPERATOR AND PUSHBUTTON FURNISHED UNDER SECTION 08331. DISCONNECT FURNISHED UNDER DIVISION 15.

10 INSTALL CONDUIT, RECEPTACLES AND CIRCUIT ON TRAPEZE HANGER. SEE SHEET E13, DETAIL 4. (BID SCHEDULE A, ADDITIVE BID ITEM #1)

11 20A, 250V, 2 PHASE, 3 WIRE RECEPTACLE, NEMA 6-20R.

12 1/2"C, 6#22 AWG CONDUCTOR LOW-VOLTAGE CABLE.

POWER PLAN

SCALE : 1/8" = 1'-0"

METERS (A.F.S.) 0 1 2 3 4 5 6 7 8

0 4' 8' 16' 24'

1/8" = 1'-0" (A.F.S.) FP2B3A

RECORD DRAWING

Date DEC 1995

These drawings have been reproduced on the construction records of this entity. While the information submitted by the Owner will be assumed to be reliable, this Engineer will not be responsible for the accuracy of this information nor for errors or omissions which may appear in the record document as a result thereof.

96/9002431ED1/DEXT2AP11-18-93/PCS

REVISION	STATUS	DATE	DESCRIPTION	BY
1	AS-BUILT	12/95	RECORD DRAWING	WDG

DEXTER NATIONAL FISH HATCHERY AND TECHNOLOGY CENTER – PHASE I

FISH CULTURE BUILDING – POWER PLAN

E 7

DATE	DESIGNED	DRAWN	CHECKED	DRAWING NO.
NOV. 1993	DAD/WDG	SJH	DAD/DRH	S.E.C. – NM – 133 – 149.0

SHEET 50 OF 64

LEEDSHILL-HERKENHOFF, INC. ARCHITECTURE ENGINEERS SANTA FE SAN DIEGO

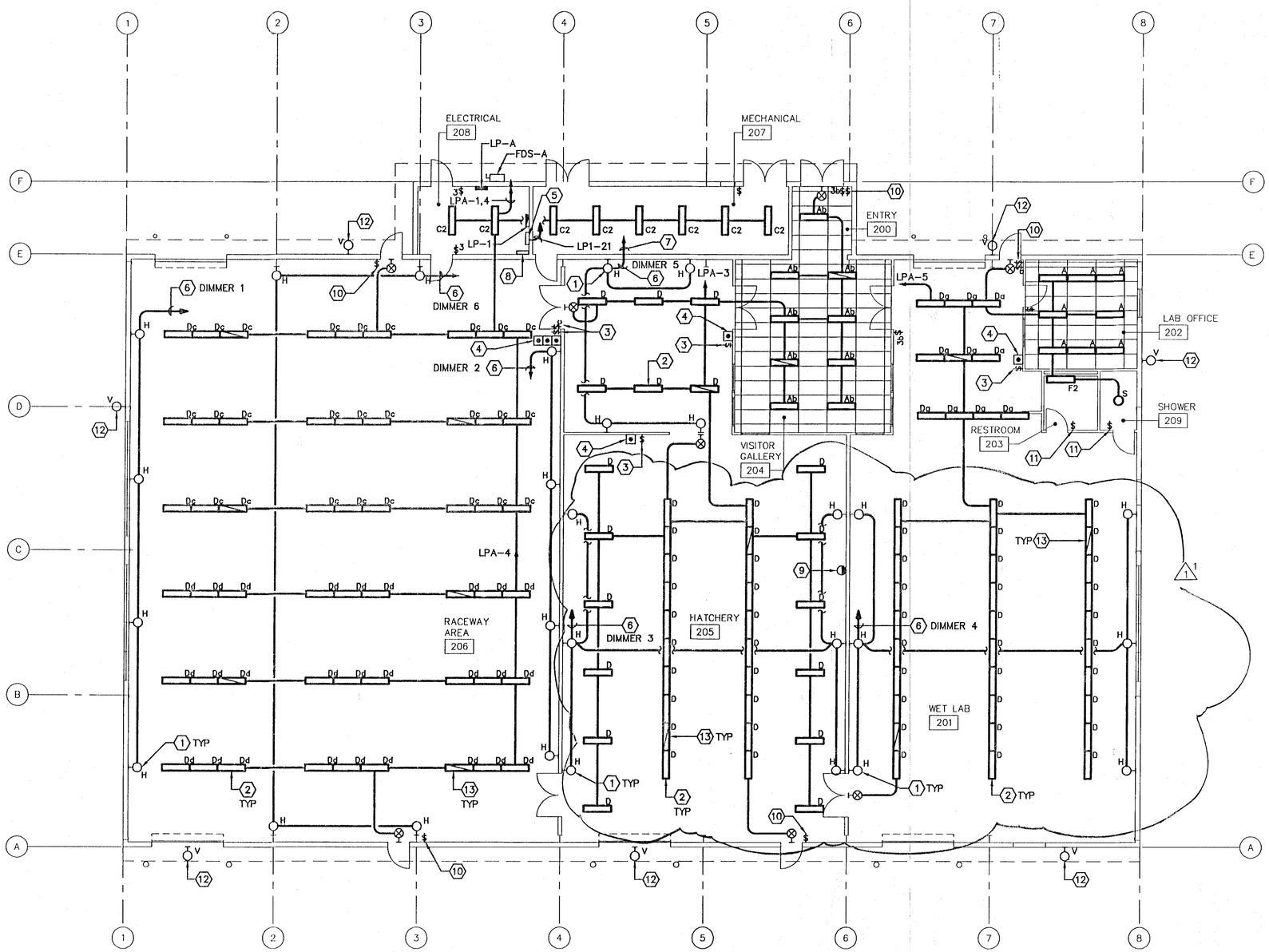

LIGHTING PLAN

SCALE : 1/8" = 1'-0"

E8 E8

GENERAL NOTES

1. REFERENCES FOR WORK ON THIS SHEET:

   DRAWINGS:

   LEGEND: SHEETS E1 AND E2.

   LIGHT FIXTURE SCHEDULE: SHEET E2.

2. SEE SPECIFICATION SECTIONS 16111 AND 16123 FOR CONDUIT/CONDUCTOR SIZING AND CIRCUITING REQUIREMENTS OF BRANCH CIRCUITS WITHOUT CALLOUTS ON THE DRAWINGS.

3. LIGHT FIXTURE LOCATIONS ARE APPROXIMATE IN MECHANICAL AREAS. COORDINATE EXACT LOCATION OF LIGHT FIXTURES TO AVOID CONFLICTS WITH MECHANICAL DUCTWORK AND EQUIPMENT. RELOCATE LIGHT FIXTURES TO AVOID CONFLICTS.

4. CONDUIT/CONDUCTOR TO/FROM LIGHT SWITCHES, DIMMER CONTROL STATIONS. PHOTOCONTROLLERS, AND OTHER LIGHTING CONTROL COMPONENTS NOT SHOWN ON PLANS. PROVIDE NUMBER OF CONDUCTORS REQUIRED TO IMPLEMENT SWITCHING ARRANGEMENTS SHOWN ON PLANS OR CONTROL PHILOSOPHY SHOWN ON SCHEMATICS, UNLESS OTHERWISE NOTED.

5. INSTALL INDIRECT LIGHT FIXTURES 8'-0" ABOVE TOP OF FLOOR.

6. INSTALL PENDENT LIGHT FIXTURES 10'-0" ABOVE TOP OF FLOOR.

KEYED NOTES ⬡

1 NORMAL ROOM LIGHTING, INDIRECT, ON DIMMER. FOR DIMMER ONE LINE DIAGRAM, SEE SHEET E6.

2 MAINTENANCE LIGHTING, DIRECT, ON KEY OPERATED SELECTOR SWITCH.

3 KEY OPERATED SELECTOR SWITCH. LABEL "MAINTENANCE LIGHTING". SEE CONTROL SCHEMATIC L5.

4 DIMMER CONTROL STATION.

5 DIMMER CABINET.

6 TO DIMMER CABINET, CIRCUIT INDICATED.

7 3/4"C, 4#10, 1#10 GRD.

8 LIGHTING CONTROL PANEL. SEE CONTROL SCHEMATICS NO. L2 AND NO. 5.

9 PHOTOCONTROLLER FOR EXTERIOR LIGHTING CONTROL. MOUNT NORTH OF PEAK OF ROOF AT 2'-0" ABOVE ROOF LINE. SEE CONTROL SCHEMATIC NO. L2.

10 MOMENTARY CONTACT TOGGLE SWITCH. LABEL "NIGHT WALK-THRU LIGHT". SEE CONTROL SCHEMATIC L5.

11 LIGHT/EXHAUST FAN SWITCH. SEE CONTROL SCHEMATIC NO. 9A.

12 INSTALL FIXTURE 9'-0" ABOVE TOP OF FLOOR. CIRCUIT ON LPA-9 USING 3/4"C, 2#10, 1#10 GRD THROUGHOUT. SEE CONTROL SCHEMATIC NO. L2.

13 CONNECT UNSWITCHED CONDUCTOR TO BATTERY UNIT.

RECORD DRAWING

Date DEC 1995

These drawings have been revised based on the construction records of the owner. While the information submitted by the Owner will be assumed to be reliable, the Engineer will not be responsible for the accuracy of this information nor for errors or omissions which may appear in the record document as a result thereof.

REDRAWN FOR RECORD PURPOSES

0 1 2 3 4 5 6 7 8
METERS (A.F.S.)
0 4' 8' 16' 24'
1/8" = 1'-0" (A.F.S.)

FP2B3A

96/90024.31ED1/DEXT2AL/12-06-95/SJH

REVISION	STATUS	DATE	DESCRIPTION	BY
1	AS-BUILT	12/95	RECORD DRAWING	WDG

DEXTER NATIONAL FISH HATCHERY AND TECHNOLOGY CENTER – PHASE I

FISH CULTURE BUILDING – LIGHTING PLAN

DATE	DESIGNED	DRAWN	CHECKED	DRAWING NO.
NOV. 1993	DAD/WDG	PDS	DAD/DRH	S.E.C. – NM – 133 – 145.0

E 8

LEEDSHILL-HERKENHOFF, INC.
ALBUQUERQUE ENGINEERS SANTA FE ARCHITECTS SAN DIEGO

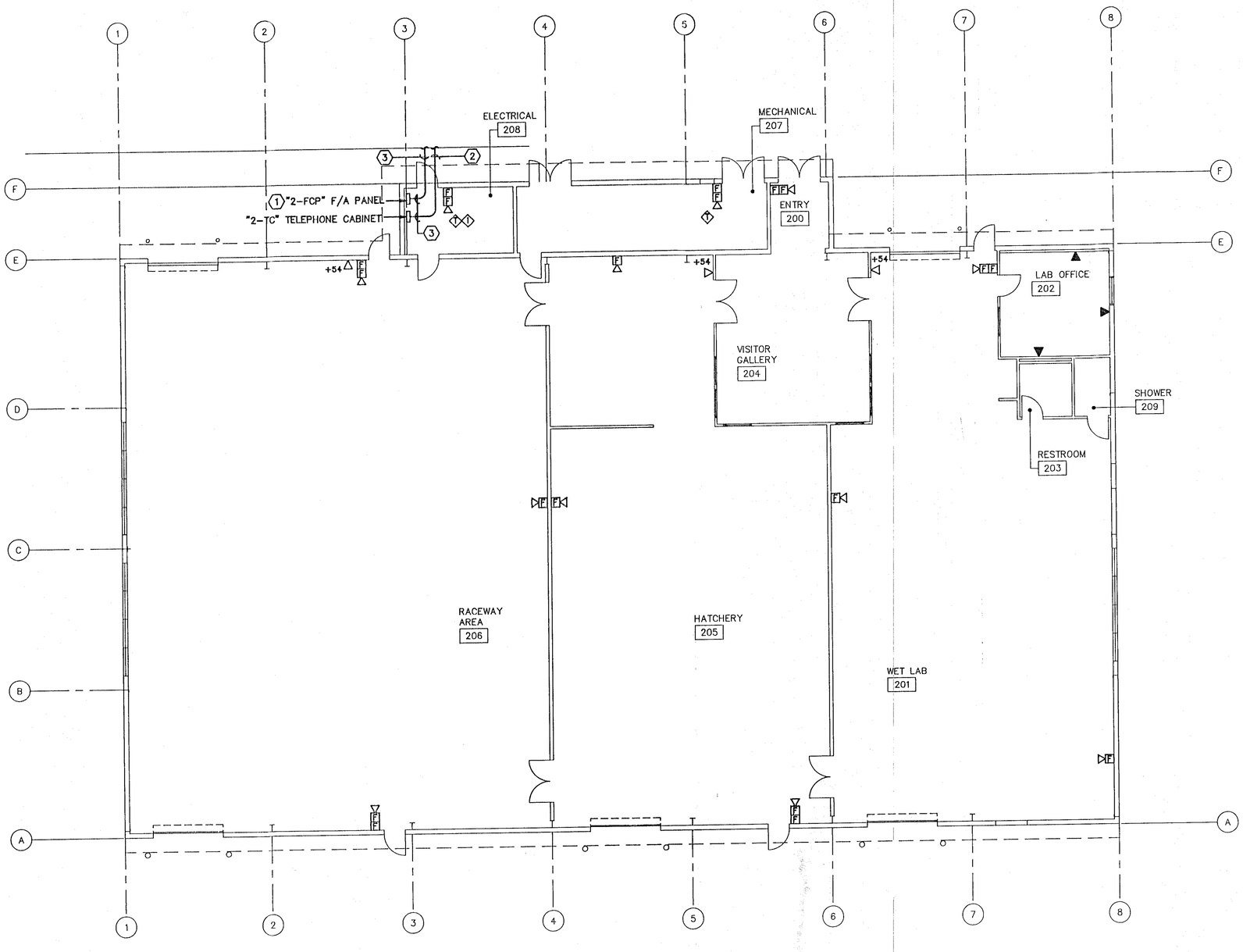

GENERAL NOTES

1. REFERENCES FOR WORK ON THIS SHEET:

   DRAWINGS:

   LEGEND: SHEETS E1 AND E2.

   FIRE ALARM SYSTEM ONE LINE DIAGRAM: SHEET E6.

   COMMUNICATION SYSTEMS ONE LINE: SHEET E6.

KEYED NOTES ⬡

1 FOUR ZONE PANEL.

2 1"C TO 5'-0" BEYOND EDGE OF BUILDING, INSULATED BUSHING ON END, 6 PAIR TELEPHONE CABLE TO EXISTING BUILDING. FOR CONTINUATION, SEE SHEET E4.

3 1"C, STUB-OUT AND CAP 5'-0" BEYOND EDGE OF BUILDING.

1 SPECIAL SYSTEMS PLAN
E9 E9
SCALE : 1/8" = 1'-0"

0 1 2 3 4 5 6 7 8
METERS (A.F.S.)
0 4' 8' 16' 24'
1/8" = 1'-0" (A.F.S.)

FP2B3A

RECORD DRAWING
Date DEC 1995

These drawings have been revised based on the construction records of the owner. While the information submitted by the Owner will be assumed to be reliable, the engineer will not be responsible for the accuracy of this information nor for errors or omissions which may appear in the record document as a result thereof

96/90024.31ED1/DEXT2AS/11-18-93/PCS

REVISION	STATUS	DATE	DESCRIPTION	BY
1	AS-BUILT	12/95	RECORD DRAWING	WDG

DEXTER NATIONAL FISH HATCHERY AND TECHNOLOGY CENTER – PHASE I

FISH CULTURE BUILDING – SPECIAL SYSTEMS PLAN

DATE	DESIGNED	DRAWN	CHECKED	DRAWING NO.
NOV. 1993	DAD/WDG	PDS	DAD/DRH	S.E.C. – NM – 133 – 151.0

E 9

LEEDSHILL-HERKENHOFF, INC.
ARCHITECTS SAN DIEGO SANTA FE
ENGINEERS
AGRICULTURE

SHEET 52 OF 64

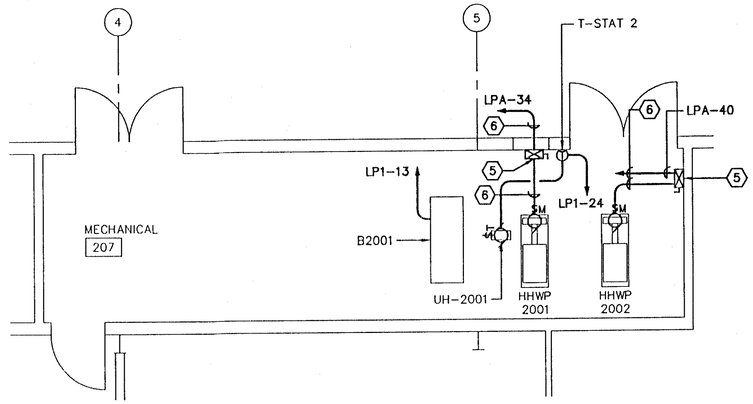

ENLARGED MECHANICAL ROOM (FISH CULTURE BLDG)

SCALE: 1/4" = 1'-0"

1 — E7 E13

GENERAL NOTES

1. REFERENCES FOR WORK ON THIS SHEET:

   DRAWINGS:

   LEGEND: SHEETS E1 AND E2.

   CONTROL SCHEMATIC REFERENCE SCHEDULES: SHEET E18.

   DISCONNECT SWITCH SCHEDULE: SHEET E2.

   POWER AND EQUIPMENT ONE LINE: SHEET E5.

KEYED NOTES ⬡

1 NOT USED.

2 NOT USED.

3 NOT USED.

4 NOT USED.

5 COMBINATION/MOTOR STARTER DISCONNECT SWITCH.

6 3/4"C, 3#10, 1#10 GRD.

7 NOT USED.

8 NOT USED.

9 NOT USED.

10 STRAIN RELIEF GRIP SUPPORT FROM TRAPEZE HANGERS.

11 #10 2 WIRE AND GROUND SO CORD FOR SPECIAL PURPOSE RECEPTACLE. #12 2 WIRE AND GROUND SO CORD FOR RECEPTACLE.

12 STRAIN RELIEF GRIP.

13 RECEPTACLE IN WEATHERPROOF CAST BOX WITH WEATHERPROOF COVER PLATE (RECEPTACLE – NEMA 5-20R, SPECIAL PURPOSE RECEPTACLE – NEMA 6-20R).

14 WEATHERPROOF JUNCTION BOX.

15 WATER TIGHT CORD CONNECTOR.

16 FOR TRAPEZE HANGERS, SEE SHEET W3, DETAIL 6.

17 NOT USED.

△2 2

△2 1

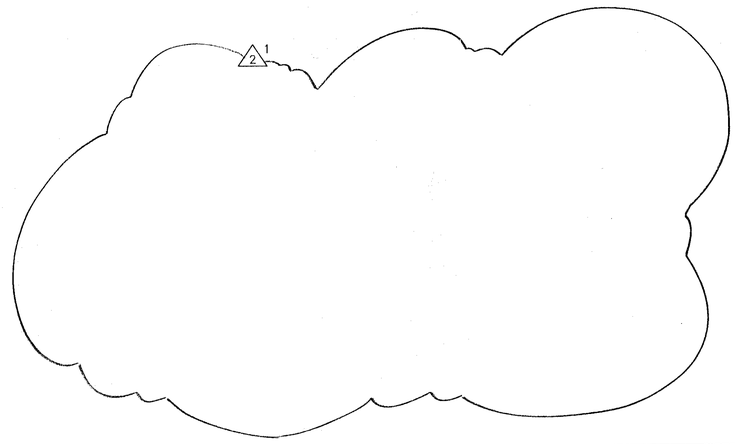

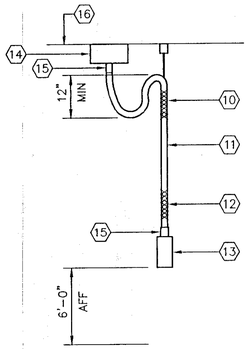

RECEPTACLE DROP DETAIL

NOT TO SCALE (BID SCHEDULE A, ADDITIVE BID ITEM #2)

4 — E7 E13

REDRAWN FOR RECORD PURPOSES

0 1 2 3 4
METERS (A.F.S.)

0 2' 4' 8' 12'
1/4" = 1'-0" (A.F.S.)

RECORD DRAWING

Date DEC 1995.

These drawings have been revised based on the construction records of the owner. While the information submitted by the Owner will be assumed to be reliable, the Engineer will not be responsible for the accuracy of this information nor for errors or omissions which may appear in the record document as a result thereof.

48/90024.31ED3/DEXDET1/12-05-95/PCS

REVISION	STATUS	DATE	DESCRIPTION	BY
△2 2	AS-BUILT	12/95	RECORD DRAWING	WDG
△1 2		12/94	REPLACE POLE MOUNTED WITH PAD MOUNTED TRANSFORMER	

DEXTER NATIONAL FISH HATCHERY AND TECHNOLOGY CENTER – PHASE I

ENLARGED PLAN AND DETAILS

E 13

DATE	DESIGNED	DRAWN	CHECKED	DRAWING NO.
NOV. 1993	DAD/WDG	PDS	DAD/DRH	S.E.C. – NM – 133 – 155.0

LEEDSHILL-HERKENHOFF, INC.
ENGINEERS SANTA FE ARCHITECTS SAN DIEGO
ALBUQUERQUE

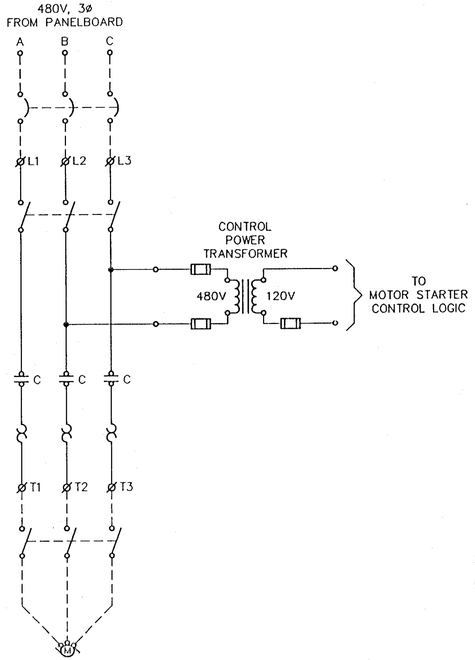

1 E14 E14 CONTROL SCHEMATIC NO. 3
NO SCALE

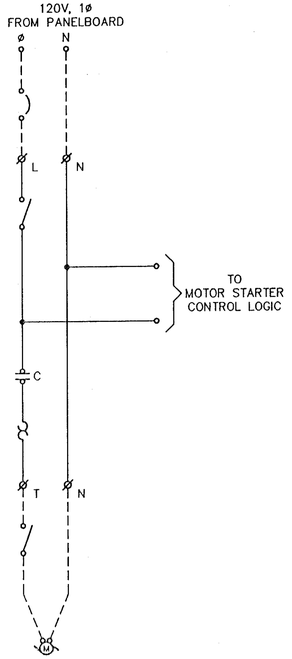

2 E14 E14 CONTROL SCHEMATIC NO. 4
NO SCALE

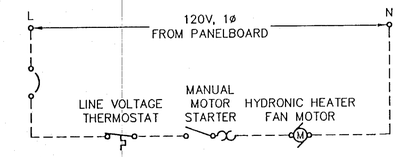

3 E14 E14 CONTROL SCHEMATIC NO. 6
NO SCALE

GENERAL NOTES

1. REFERENCES FOR WORK ON THIS SHEET:

   DRAWINGS:

   LEGEND: SHEETS E1 AND E2.

   CONTROL SCHEMATIC REFERENCE SCHEDULES: SHEET E18.

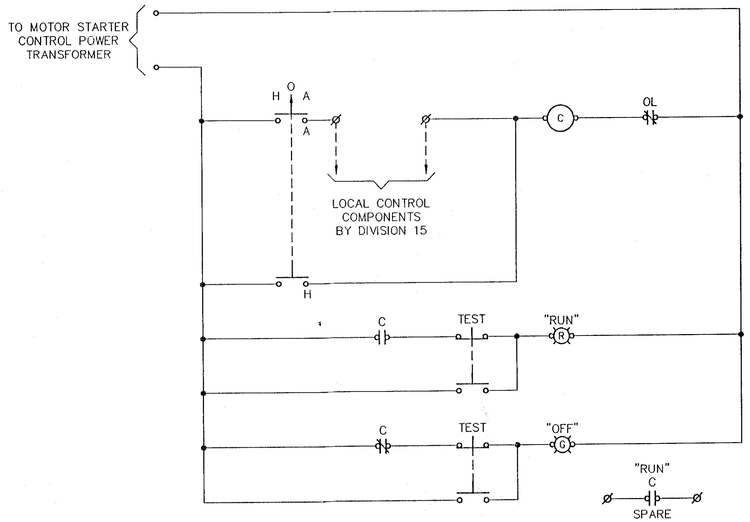

6 E14 E14 CONTROL SCHEMATIC NO. 14
NO SCALE

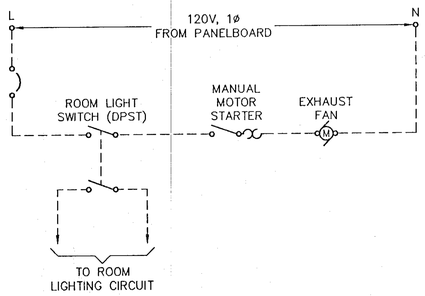

7 E14 E14 CONTROL SCHEMATIC NO. 9A
NO SCALE

RECORD DRAWING
Date DEC 1995

These drawings have been revised based on the construction records of the owner. While the information submitted by the Owner will be assumed to be reliable, the Engineer will not be responsible for the accuracy of this information nor for errors or omissions which may appear in the record document as a result thereof

REDRAWN FOR RECORD PURPOSES

1/90024.31ED3/DEXCS1/12-05-95/SJH

REVISION	STATUS	DATE	DESCRIPTION	BY
1	AS-BUILT	12/95	RECORD DRAWING	WDG

DEXTER NATIONAL FISH HATCHERY AND TECHNOLOGY CENTER – PHASE I

CONTROL SCHEMATICS

DATE	DESIGNED	DRAWN	CHECKED	DRAWING NO.
NOV. 1993	DAD/WDG	PDS	DAD/DRH	S.E.C. – NM – 133 – 156.0

E 14

LEEDSHILL-HERKENHOFF, INC. ENGINEERS ARCHITECTS SAN DIEGO SANTA FE ALBUQUERQUE

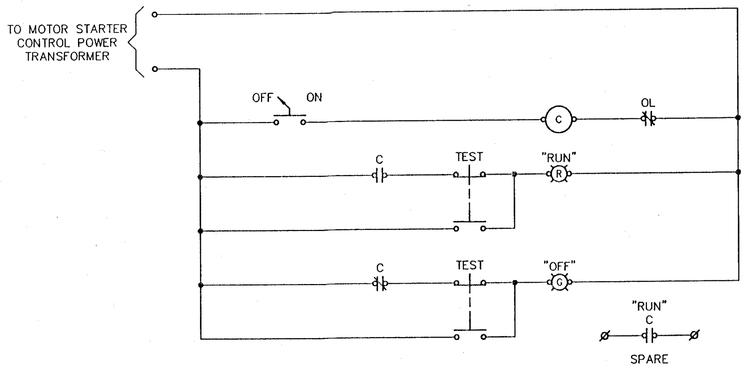

1 E15 E15

CONTROL SCHEMATIC NO. 20

NO SCALE

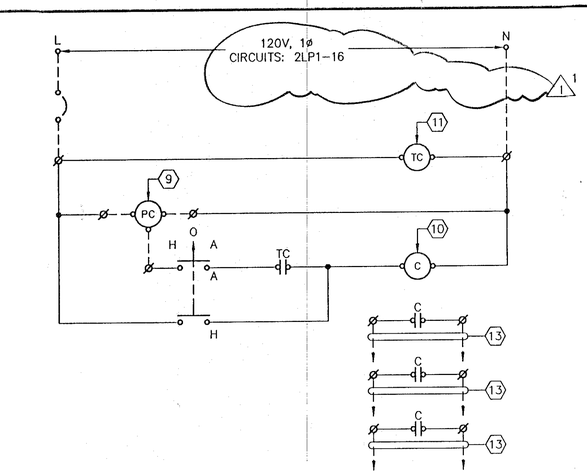

2 E15 E15

LIGHTING CONTROL PANEL SCHEMATIC (CONTROL SCHEMATIC NO. L2) 12

NO SCALE

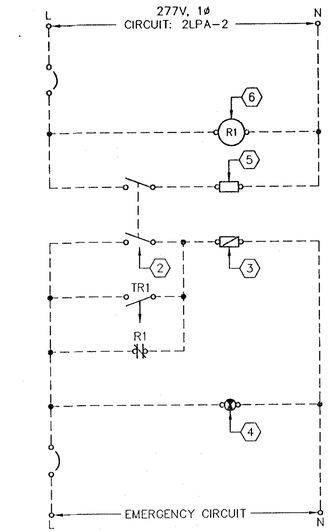

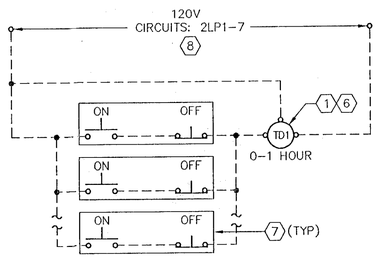

3 E15 E15

EMERGENCY/EXIT/NIGHT WALK-THRU LIGHT SCHEMATIC (CONTROL SCHEMATIC NO. L5)

NO SCALE

GENERAL NOTES

1. REFERENCES FOR WORK ON THIS SHEET:

   DRAWINGS:

   LEGEND: SHEETS E1 AND E2.

   CONTROL SCHEMATIC REFERENCE SCHEDULES: SHEET E18.

KEYED NOTES ⬡

1 TIME DELAY RELAY (ADJUSTABLE). RANGE: 0.6-60 MINUTES. SETTING: 30 MINUTES.

2 MAINTENANCE LIGHTING KEY OPERATED SELECTOR SWITCH. SEE PLANS FOR QUANTITY REQUIRED.

3 EMERGENCY FLUORESCENT FIXTURE.

4 EXIT LIGHT.

5 NORMAL FIXTURE.

6 INSTALL IN BUILDING LIGHTING CONTROL PANEL REFERENCED IN CONTROL SCHEMATIC NO. L2.

7 NIGHT WALK-THRU LIGHTING MOMENTARY CONTACT TOGGLE SWITCH (ON/OFF, SPRING RETURN TO CENTER). SEE PLANS FOR QUANTITY REQUIRED.

8 WIRE CIRCUIT WITH #10 CONDUCTOR.

9 PHOTOCONTROLLER.

10 LIGHTING CONTACTOR. NUMBER OF POLES AND CIRCUITS AS SHOWN.

11 FOUR CHANNEL TIME CLOCK.

12 INSTALL COMPONENTS IN NEMA 12 HINGED COVER ENCLOSURE.

13 277V CIRCUITS TO LIGHTS. SUPPLY CONTACTOR WITH MINIMUM 3 POLES, EACH BUILDING.

RECORD DRAWING

Date DEC 1995

These drawings have been revised based on the construction records of the owner. While the information submitted by the Owner will be assumed to be reliable, the Engineer will not be responsible for the accuracy of this information nor for errors or omissions which may appear in the record document as a result thereof

REDRAWN FOR RECORD PURPOSES

1/90024.31ED3/DEXCS2/12-05-95/SJH

REVISION	STATUS	DATE	DESCRIPTION	BY
1	AS-BUILT	12/95	RECORD DRAWING	WDG

DEXTER NATIONAL FISH HATCHERY AND TECHNOLOGY CENTER - PHASE I

CONTROL SCHEMATICS

DATE	DESIGNED	DRAWN	CHECKED	DRAWING NO.
NOV. 1993	DAD/WDG	PDS	DAD/DRH	S.E.C. - NM - 133 - 157.0

E 15

SHEET 58 OF 64

LEEDSHILL-HERKENHOFF, INC.
ENGINEERS SANTA FE SAN DIEGO
ARCHITECTS
ALBUQUERQUE

PANEL: LP-2

GENERAL	
VOLTAGE:	120/208
PHASE:	3-PHASE
WIRE:	4-WIRE
FRAME:	100 A
MAIN:	MAIN LUGS ONLY
CCTS.:	24
MOUNTING:	SURFACE
FEED:	BOTTOM
ENCLOSURE:	NEMA 3S
LOCATION:	ROOM 206

CONNECTED LOAD		
A	B	C
11	9	10

PANELBOARD OPTIONS: FRONT HINGED TO BOX; EQUIPMENT GROUND BUS

CCT	BKR RTG	LOAD DESCRIPTION	AMPS	PHASE	AMPS	LOAD DESCRIPTION	BKR RTG	CCT
1	20A/1P	RECEPTACLES	5.0	A	0.0	SPARE	20A/1P	2
3	20A/1P	RECEPTACLES	3.0	B	0.0	SPARE	20A/1P	4
5	20A/1P	SPARE	0.0	C	0.0	SPARE	20A/1P	6
7	20A/1P	SPARE	0.0	A	0.0	SPACE		8
9	20A/1P	SPARE	0.0	B	0.0	SPACE		10
11		SPACE	0.0	C	0.0	SPACE		12
13		SPACE	0.0	A	0.0	SPACE		14
15		SPACE	0.0	B	0.0	SPACE		16
17	20A/1P	SPARE	0.0	C	0.0	SPACE		18
19	20A/1P	UNIT HEATERS	6.0	A	0.0	SPACE		20
21	20A/1P	UNIT HEATERS	6.0	B	0.0	SPACE		22
23	20A/1P	EXHAUST FAN	10.0	C	0.0	SPACE		24

PANEL: LP-3

GENERAL	
VOLTAGE:	120/208
PHASE:	3-PHASE
WIRE:	4-WIRE
FRAME:	100 A
MAIN:	MAIN LUGS ONLY
CCTS.:	24
MOUNTING:	SURFACE
FEED:	BOTTOM
ENCLOSURE:	NEMA 3S
LOCATION:	ROOM 206

CONNECTED LOAD		
A	B	C
30	23	30

PANELBOARD OPTIONS: FRONT HINGED TO BOX; EQUIPMENT GROUND BUS

CCT	BKR RTG	LOAD DESCRIPTION	AMPS	PHASE	AMPS	LOAD DESCRIPTION	BKR RTG	CCT	
1	20A/1P	RECEPTACLES	3.0	A	0.0	SPARE	20A/1P	2	
3	20A/1P	RECEPTACLES	5.0	B	0.0	SPARE	20A/1P	4	
5	20A/1P	RECEPTACLES	3.0	C	0.0	SPARE	20A/1P	6	
7	20A/1P	SPARE	0.0	A	9.0	RACEWAY RECEPTACLE	20A/1P	8	(1)
9	20A/1P	SPARE	0.0	B	9.0	RACEWAY RECEPTACLE	20A/1P	10	(1)
11	20A/1P	SPARE	0.0	C	9.0	RACEWAY RECEPTACLE	20A/1P	12	(1)
13		SPACE	0.0	A	9.0	RACEWAY RECEPTACLE	20A/1P	14	(1)
15		SPACE	0.0	B	0.0	SPARE	20A/1P	16	
17		SPACE	0.0	C	9.0	RACEWAY RECEPTACLE	20A/2P	18	(1)
19		SPACE	0.0	A	9.0				
21		SPACE	0.0	B	9.0	RACEWAY RECEPTACLE	20A/2P	22	(1)
23		SPACE	0.0	C	9.0				

PANEL: LP-4

GENERAL	
VOLTAGE:	120/208
PHASE:	3-PHASE
WIRE:	4-WIRE
FRAME:	100 A
MAIN:	MAIN LUGS ONLY
CCTS.:	24
MOUNTING:	SURFACE
FEED:	BOTTOM
ENCLOSURE:	NEMA 3S
LOCATION:	ROOM 205

CONNECTED LOAD		
A	B	C
35.5	33.5	29.5

PANELBOARD OPTIONS: FRONT HINGED TO BOX; EQUIPMENT GROUND BUS

CCT	BKR RTG	LOAD DESCRIPTION	AMPS	PHASE	AMPS	LOAD DESCRIPTION	BKR RTG	CCT	
1	20A/1P	RECEPTACLES	3.0	A	0.0	SPARE	20A/1P	2	
3	20A/1P	RECEPTACLES	3.0	B	0.0	SPARE	20A/1P	4	
5	20A/1P	RECEPTACLES	3.0	C	0.0	SPARE	20A/1P	6	
7	20A/1P	SPARE	0.0	A	4.0	RACEWAY RECEPTACLE	20A/1P	8	(1)
9	20A/1P	SPARE	0.0	B	8.0	RACEWAY RECEPTACLE	20A/1P	10	(1)
11	20A/1P	SPARE	0.0	C	8.0	RACEWAY RECEPTACLE	20A/1P	12	(1)
13		SPACE	0.0	A	18.5	RACEWAY RECEPTACLE	20A/1P	14	(1)
15		SPACE	0.0	B	18.5	RACEWAY RECEPTACLE	20A/1P	16	(1)
17		SPACE	0.0	C	18.5	RACEWAY RECEPTACLE	20A/1P	18	(1)
19	20A/1P	UNIT HEATERS	6.0	A	4.0	RACEWAY RECEPTACLE	20A/1P	20	
21		SAPCE	0.0	B	4.0	RACEWAY RECEPTACLE	20A/1P	22	
23		SPACE	0.0	C	0.0	SPARE	20A/1P	24	

PANEL: LP-5

GENERAL	
VOLTAGE:	120/208
PHASE:	3-PHASE
WIRE:	4-WIRE
FRAME:	100 A
MAIN:	MAIN LUGS ONLY
CCTS.:	24
MOUNTING:	SURFACE
FEED:	BOTTOM
ENCLOSURE:	NEMA 3S
LOCATION:	ROOM 205

CONNECTED LOAD		
A	B	C
31.5	33	36.5

PANELBOARD OPTIONS: FRONT HINGED TO BOX; EQUIPMENT GROUND BUS

CCT	BKR RTG	LOAD DESCRIPTION	AMPS	PHASE	AMPS	LOAD DESCRIPTION	BKR RTG	CCT	
1	20A/1P	RECEPTACLES	5.0	A	0.0	SPARE	20A/1P	2	
3	20A/1P	RECEPTACLES	3.0	B	4.0	RACEWAY RECEPTACLE	20A/1P	4	
5	20A/1P	SPARE	0.0	C	4.0	RACEWAY RECEPTACLE	20A/1P	6	
7	20A/1P	SPARE	0.0	A	4.0	RACEWAY RECEPTACLE	20A/1P	8	(1)
9	20A/1P	SPARE	0.0	B	8.0	RACEWAY RECEPTACLE	20A/1P	10	(1)
11		SPACE	0.0	C	8.0	RACEWAY RECEPTACLE	20A/1P	12	(1)
13		SPACE	0.0	A	8.0	FREEZER	20A/1P	14	
15		SPACE	0.0	B	8.0	FREEZER	20A/1P	16	
17		SPACE	0.0	C	0.0	SPARE	20A/1P	18	
19	20A/1P	RACEWAY RECEPTACLE	18.5	A	0.0	SPARE	20A/1P	20	(1)
21		SPACE	0.0	B	6.0	FREEZER	20A/2P	22	
23	20A/1P	RACEWAY RECEPTACLE	18.5	C	6.0				(1)

PANEL: LP-6

GENERAL	
VOLTAGE:	120/208
PHASE:	3-PHASE
WIRE:	4-WIRE
FRAME:	100 A
MAIN:	MAIN LUGS ONLY
CCTS.:	24
MOUNTING:	SURFACE
FEED:	BOTTOM
ENCLOSURE:	NEMA 3S
LOCATION:	ROOM 201

CONNECTED LOAD		
A	B	C
16	21	15

PANELBOARD OPTIONS: FRONT HINGED TO BOX; EQUIPMENT GROUND BUS

CCT	BKR RTG	LOAD DESCRIPTION	AMPS	PHASE	AMPS	LOAD DESCRIPTION	BKR RTG	CCT	
1	20A/1P	RECEPTACLES	5.0	A	4.0	RACEWAY RECEPTACLE	20A/1P	2	(1)
3	20A/1P	RECEPTACLES	3.0	B	4.0	RACEWAY RECEPTACLE	20A/1P	4	(1)
5	20A/1P	RECEPTACLES	3.0	C	4.0	RACEWAY RECEPTACLE	20A/1P	6	(1)
7	20A/1P	FC-2001	3.0	A	4.0	RACEWAY RECEPTACLE	20A/1P	8	(1)
9	20A/1P	SPARE	0.0	B	4.0	RACEWAY RECEPTACLE	20A/1P	10	(1)
11	20A/1P	SPARE	0.0	C	8.0	RACEWAY RECEPTACLE	20A/1P	12	(1)
13	20A/1P	SPARE	0.0	A	0.0	SPARE	20A/1P	14	
15		SPACE	0.0	B	0.0	SPARE	20A/1P	16	
17		SPACE	0.0	C	0.0	SPARE	20A/1P	18	
19		SPACE	0.0	A	0.0	SPACE		20	
21		SPACE	0.0	B	10.0	UNIT HEATERS	20A/1P	22	
23		SPACE	0.0	C	0.0	SPACE		24	

PANEL: LP-7

GENERAL	
VOLTAGE:	120/208
PHASE:	3-PHASE
WIRE:	4-WIRE
FRAME:	100 A
MAIN:	MAIN LUGS ONLY
CCTS.:	24
MOUNTING:	SURFACE
FEED:	BOTTOM
ENCLOSURE:	NEMA 3S
LOCATION:	ROOM 201

CONNECTED LOAD		
A	B	C
38	58	41

PANELBOARD OPTIONS: FRONT HINGED TO BOX; EQUIPMENT GROUND BUS

CCT	BKR RTG	LOAD DESCRIPTION	AMPS	PHASE	AMPS	LOAD DESCRIPTION	BKR RTG	CCT	
1	20A/1P	RECEPTACLES	6.0	A	5.0	RECEPTACLES	20A/1P	2	
3	20A/1P	RECEPTACLES	5.0	B	4.0	RACEWAY RECEPTACLE	20A/1P	4	(1)
5	20A/1P	WATER COOLER	10.0	C	4.0	RACEWAY RECEPTACLE	20A/1P	6	(1)
7	20A/2P	CU-2001	12.0	A	4.0	RACEWAY RECEPTACLE	20A/1P	8	(1)
			12.0	B	8.0	RACEWAY RECEPTACLE	20A/1P	10	(1)
11	20A/1P	SPARE	0.0	C	8.0	RACEWAY RECEPTACLE	20A/1P	12	(1)
13	20A/1P	SPARE	0.0	A	4.0	RACEWAY RECEPTACLE	20A/1P	14	(1)
15	20A/1P	SPARE	0.0	B	8.0	RACEWAY RECEPTACLE	20A/1P	16	(1)
17	20A/1P	SPARE	0.0	C	0.0	SPACE		18	
19	20A/1P	ELECTRIC HEATER	7.0	A	0.0	SPACE		20	
21	20A/1P	EXHAUST FAN	2.0	B	19.0	WH-2001	30A/2P	22	
23	20A/1P	SPARE	0.0	C	19.0				

PANEL: LP-1

GENERAL	
VOLTAGE:	120/208
PHASE:	3-PHASE
WIRE:	4-WIRE
FRAME:	400 A
MAIN:	300 A MCB
CCTS.:	42
MOUNTING:	SURFACE
FEED:	BOTTOM
ENCLOSURE:	NEMA 1
LOCATION:	ROOM 208

CONNECTED LOAD		
A	B	C
209	212.5	189

PANELBOARD OPTIONS: FRONT HINGED TO BOX; EQUIPMENT GROUND BUS

CCT	BKR RTG	LOAD DESCRIPTION	AMPS	PHASE	AMPS	LOAD DESCRIPTION	BKR RTG	CCT
1	20A/1P	RECEPTACLES	5.0	A	6.0	RECEPTACLES	20A/1P	2
3	20A/1P	RECEPTACLES	3.0	B	6.0	RECEPTACLES	20A/1P	4
5	20A/1P	RECEPTACLES	3.0	C	6.0	RECEPTACLES	20A/1P	6
7	20A/1P	NIGHT WALK-THRU LGT	1.0	A	0.0	SPARE	20A/1P	8
9	20A/1P	FIRE ALARM PANEL	1.0	B	0.0	SPARE	20A/1P	10
11	20A/1P	TELEPHONE EQUIPMENT	1.0	C	0.0	SPARE	20A/1P	12
13	30A/1P	B-2001	21.0	A	0.0	SPARE	20A/1P	14
15	20A/1P	SPARE	0.0	B	1.0	EXT LIGHT CONTROL	20A/1P	16
17	20A/1P	SPARE	0.0	C	0.0	SPARE	20A/1P	18
21	30A/3P	DIMMER	24.0	A	0.0	SPARE	20A/1P	20
			24.0	B	0.0	SPARE	20A/1P	22
			24.0	C	3.0	UNIT HEATERS	20A/1P	24
27	60A/3P	2-LP-2	11.0	A	30.0	2-LP-3	60A/3P	28
			9.0	B	23.0			
			10.0	C	30.0			
33	60A/3P	2-LP-4	35.5	A	31.5	2-LP-5	60A/3P	34
			33.5	B	33.0			
			29.5	C	36.5			
39	60A/3P	2-LP-6	16.0	A	38.0	2-LP-7	100A/3P	40
			21.0	B	58.0			
			15.0	C	41.0			

PANEL: LP-A

GENERAL	
VOLTAGE:	277/480
PHASE:	3-PHASE
WIRE:	4-WIRE
FRAME:	225 A
MAIN:	MAIN LUGS ONLY
CCTS.:	42
MOUNTING:	SURFACE
FEED:	BOTTOM
ENCLOSURE:	NEMA 1
LOCATION:	ROOM 208

CONNECTED LOAD		
A	B	C
114	125	129

PANELBOARD OPTIONS: FRONT HINGED TO BOX; EQUIPMENT GROUND BUS

CCT	BKR RTG	LOAD DESCRIPTION	AMPS	PHASE	AMPS	LOAD DESCRIPTION	BKR RTG	CCT
1	20A/1P	LIGHTS	8.0	A	1.0	LGT CONTROL RELAY	20A/1P	2
3	20A/1P	LIGHTS	10.0	B	7.0	LIGHTS	20A/1P	4
5	20A/1P	LIGHTS	11.0	C	9.0	EXTERIOR LIGHTS	20A/1P	6
9	20A/3P	OVERHEAD DOOR (2)	4.0	A	0.0	SPARE	20A/1P	8
			4.0	B	0.0	SPARE	20A/1P	10
			4.0	C	0.0	SPARE	20A/1P	12
15	20A/3P	OVERHEAD DOOR (3)	6.0	A	0.0	SPARE	20A/1P	14
			6.0	B	0.0	SPARE	20A/1P	16
			6.0	C	12.0	AC-2001	20A/1P	18
21	20A/3P	SPARE	0.0	A	82.0	TR/D-A	150A/3P	22
			0.0	B	85.0			
			0.0	C	74.0			
27	15A/3P	EF-2002	2.0	A	1.0	SSP-A	60A/3P	28
			2.0	B	1.0			
			2.0	C	1.0			
33	15A/3P	EF-2003	2.0	A	4.0	HHWP-2001	15A/3P	34
			2.0	B	4.0			
			2.0	C	4.0			
39	20A/3P	SPARE	0.0	A	4.0	HHWP-2002	15A/3P	40
			0.0	B	4.0			
			0.0	C	4.0			

1/90024.31ED3/DEXPAN1/11-19-93/PdS

KEYED NOTES ⬡

1 IN THE EVENT BID SCHEDULE A – ADDITIVE UID ITEM #2 IS NOT ACCEPTED CORRECT PANEL CIRCUIT DIRECTORY TO INDICATE "SPARE".

RECORD DRAWING
Date DEC 1995

These drawings have been revised based on the construction records of the owner. While the information submitted by the Owner will be assumed to be reliable, the Engineer will not be responsible for the accuracy of this information nor for errors or omissions which may appear in the record document as a result thereof.

DONNEY R. HOWARD — NEW MEXICO — 11375 — REGISTERED PROFESSIONAL ENGINEER — 11/19/93

REVISION	STATUS	DATE	DESCRIPTION	BY
1	AS-BUILT	12/95	RECORD DRAWING	WDG

DEXTER NATIONAL FISH HATCHERY AND TECHNOLOGY CENTER – PHASE I

FISH CULTURE BUILDING – PANEL SCHEDULES

DATE	DESIGNED	DRAWN	CHECKED	DRAWING NO.
NOV. 1993	DAD/WDG	PDS	DAD/DRH	S.E.C. – NM – 133 – 158.0

E 16

SHEET 59 OF 64

LEEDSHILL-HERKENHOFF, INC. ENGINEERS ALBUQUERQUE SANTA FE ARCHITECTS SAN DIEGO

HVAC EQUIPMENT – FISH CULTURE BUILDING (SCHEDULE A)

LOAD DESCRIPTION	ELECTRICAL CONTROLLING DEVICE	CONTROLLING DEVICE LOCATION	REMOTE CONTROL SIGNAL SOURCE	CONTROL SCHEMATIC NO. (SEE SHEETS E42-55)	POWER VOLTAGE	FACTORY SUGGESTED CB SIZE
- B-2001	SELF-CONTAINED	LOCAL	LOCAL-15	NONE	115 V / 1-PHASE	
- HHWP-2001	FVNR	LOCAL	LOCAL-15	NO.3 & NO.14	460 V / 3-PHASE	
- HHWP-2002	FVNR	LOCAL	LOCAL-15	NO.3 & NO.14	460 V / 3-PHASE	
- AC-2001	SELF-CONTAINED	LOCAL	NONE	NONE	277 V / 1-PHASE	
- FC-2001	SELF-CONTAINED	LOCAL	T-STAT	NONE	115 V / 1-PHASE	
- CU-2001	SELF-CONTAINED	LOCAL	FC-2001	NONE	208 V / 1-PHASE	
- EH-2001	SELF-CONTAINED	LOCAL	NONE	NONE	115 V / 1-PHASE	
- UH-2001 THROUGH UH-2011	LINE T-STAT	LOCAL	NONE	NO.6	115 V / 1-PHASE	
- EF-2001	LIGHT SWITCH	LOCAL	NONE	NO.9A	115 V / 1-PHASE	
- EF-2002	FVNR	LOCAL	NONE	NO.3 & NO.20	460 V / 3-PHASE	
- EF-2003	FVNR	LOCAL	NONE	NO.3 & NO.20	460 V / 3-PHASE	
- EF-2004	FVNR	LOCAL	NONE	NO.4 & NO.20	115 V / 1-PHASE	
- EF-2005	LIGHT SWITCH	LOCAL	NONE	NO.9A	115 V / 1-PHASE	
- WH-2001	SELF-CONTAINED	LOCAL	NONE	NONE	240 V / 1-PHASE	

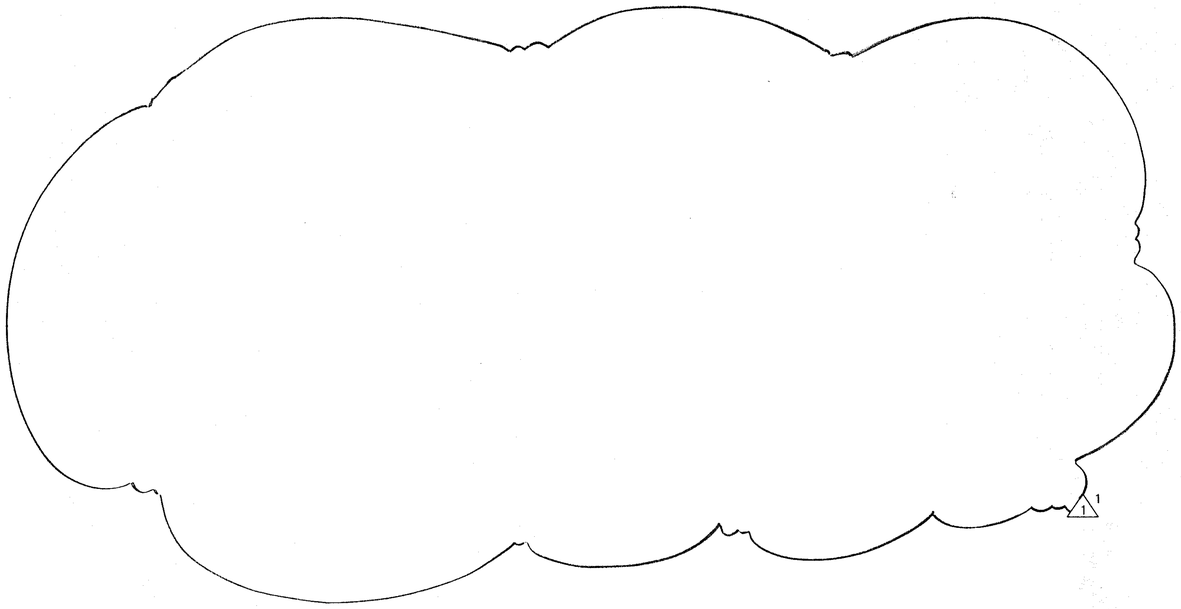

PROCESS/HVAC/DOMESTIC WATER SYSTEMS EQUIPMENT SCHEDULE LEGEND

EXPLANATION OF "CONTROLLING DEVICES" (DEVICE WHICH CONTROLS POWER TO REFERENCED EQUIPMENT)	
FVNR	FULL-VOLTAGE NON-REVERSING MOTOR STARTER.
CONTACTOR	FULL-VOLTAGE NON-REVERSING MOTOR STARTER W/O OVERLOAD.
LINE T-STAT	LINE VOLTAGE THERMOSTAT (FURNISHED UNDER DIVISION 15. INSTALLED/CONNECTED UNDER DIVISION 16.)
SWITCH	LOCAL ON/OFF SWITCH.
LIGHT SWITCH	AUXILIARY CONTACT OF ROOM LIGHT SWITCH.
SELF-CONTAINED	COMPLETE WITH MOTOR STARTERS AND ASSOCIATED CONTROL COMPONENTS NECESSARY FOR AUTOMATIC OPERATION.
(#)	NOTE OF EXPLANATION (SEE BOTTOM OF ASSOCIATED SHEET)
EXPLANATION OF "CONTROLLING DEVICE" LOCATION (PHYSICAL LOCATION OF "CONTROLLING DEVICE")	
MCC	CONTROLLING DEVICE LOCATED IN MOTOR CONTROL CENTER (MCC).
LOCAL	CONTROLLING DEVICE LOCATED INTEGRAL TO REFERENCED EQUIPMENT OR MOUNTED ON OR NEAR REFERENCED EQUIPMENT.
EXPLANATION OF "REMOTE CONTROL SIGNAL SOURCES" (SOURCE OF SIGNAL WHICH CONTROLS THE "CONTROLLING DEVICE")	
NONE	CONTROL OF EQUIPMENT IS AT "CONTROLLING DEVICE" ONLY. NO REMOTE CONTROL.
T-STAT	LOW VOLTAGE THERMOSTAT (FURNISHED UNDER DIVISION 15. INSTALLED UNDER DIVISION 16.) (CONDUIT/CONTROL WIRE BETWEEN T-STAT AND CONTROLLING DEVICE FURNISHED/INSTALLED UNDER DIVISION 16.) (CONTROL WIRE TERMINATION: BY DIVISION 15 AT BCCS, BY DIVISION 16 AT CONTROLLING DEVICE.)
AQUA-STAT	LOW VOLTAGE AQUASTAT (FURNISHED/INSTALLED UNDER DIVISION 15.) (CONDUIT/CONTROL WIRE BETWEEN AQUA-STAT AND CONTROLLING DEVICE FURNISHED/INSTALLED UNDER DIVISION 16.) (CONTROL WIRE TERMINATION: BY DIVISION 16.)
BCCS-####	CONTROLLED FROM BOILER-CHILLER CONTROL SYSTEM (BCCS). (BCCS FURNISHED/INSTALLED UNDER DIVISION 15.) (CONDUIT/CONTROL WIRE BETWEEN BCCS AND CONTROLLING DEVICE FURNISHED/INSTALLED UNDER DIVISION 15.) (CONTROL WIRE TERMINATION: BY DIVISION 15 AT BCCS, BY DIVISION 16 AT CONTROLLING DEVICE.)
WPCS-####	CONTROLLED FROM FACILITY WATER PROCESS CONTROL SYSTEM (WPCS). (WPCS FURNISHED/INSTALLED UNDER DIVISION 13.) (CONDUIT/CONTROL WIRE BETWEEN WPCS AND CONTROLLING DEVICE FURNISHED/INSTALLED UNDER DIVISION 16.) (CONTROL WIRE TERMINATION: BY DIVISION 13 AT WPCS, BY DIVISION 16 AT CONTROLLING DEVICE.)
LOCAL-13	CONTROLLED FROM LOCAL CONTROL COMPONENTS. (LOCAL COMPONENTS FURNISHED/INSTALLED BY DIVISION 13.) (CONDUIT/CONTROL WIRE BETWEEN LOCAL COMPONENTS AND CONTROLLING DEVICE FURNISHED/INSTALLED UNDER DIVISION 16.) (CONTROL WIRE TERMINATION: BY DIVISION 13 AT LOCAL COMPONENTS, BY DIVISION 16 AT CONTROLLING DEVICE.)
LOCAL-15	CONTROLLED FROM LOCAL CONTROL COMPONENTS. (LOCAL COMPONENTS FURNISHED/INSTALLED BY DIVISION 15.) (CONDUIT/CONTROL WIRE BETWEEN LOCAL COMPONENTS AND CONTROLLING DEVICE FURNISHED/INSTALLED UNDER DIVISION 15.) (CONTROL WIRE TERMINATION: BY DIVISION 15 AT LOCAL COMPONENTS, BY DIVISION 16 AT CONTROLLING DEVICE.)
____/____	CONTROLLED FROM MORE THAN ONE REMOTE SOURCE. SEE INDIVIDUAL DESCRIPTIONS.
(#)	NOTE OF EXPLANATION (SEE BOTTOM OF ASSOCIATED SHEET)

NOTE: ALL DESIGNATIONS MAY NOT BE USED ON THIS JOB.

RECORD DRAWING
Date DEC 1995

These drawings have been revised based on the construction records of the owner. While the information submitted by the Owner will be assumed to be reliable, the Engineer will not be responsible for the accuracy of this information nor for errors or omissions which may appear in the record document as a result thereof.

REDRAWN FOR RECORD PURPOSES

LEEDSHILL-HERKENHOFF, INC.
ENGINEERS ALBUQUERQUE
ARCHITECTS SANTA FE SAN DIEGO

1/90024.31ED3/DEXSCH/12-05-95/SJH

REVISION	STATUS	DATE	DESCRIPTION	BY
1	AS-BUILT	12/95	RECORD DRAWING	WDG

DEXTER NATIONAL FISH HATCHERY AND TECHNOLOGY CENTER – PHASE I

SCHEDULES

E 18

DATE	DESIGNED	DRAWN	CHECKED	DRAWING NO.
NOV. 1993	DAD/WDG	PDS	DAD/DRH	S.E.C. – NM – 133 – 160.0

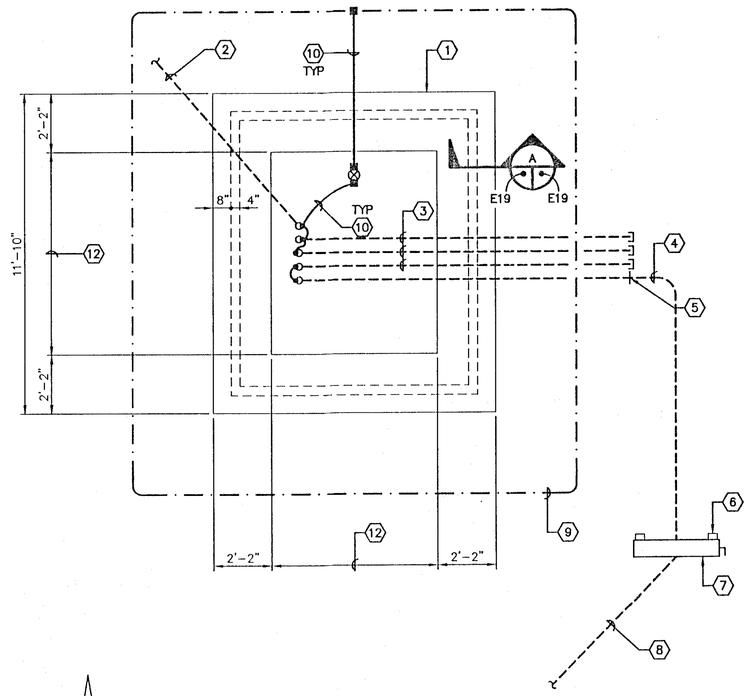

N

TRANSFORMER PAD DETAIL

NOT TO SCALE

E19 E19

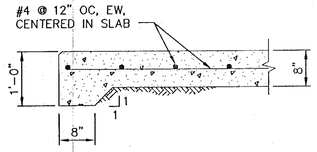

THICKENED EDGE SECTION

NOT TO SCALE

A

E19 E19

KEYED NOTES ⬡

1. CONCRETE PAD.
2. 4"C, 3#2/0, 15 KV CABLE.
3. 4"C, STUB-OUT 5'-0" BEYOND EDGE OF SLAB AND CAP.
4. 4"C, 4#4/0, 1#2 GRD.
5. INSTALL COUPLING IN CONDUIT AT 5'-0" BEYOND EDGE OF SLAB.
6. UNISTRUT OR STEEL ANGLE LEGS IN 6" DIA X 3'-0" DEEP CONCRETE FOOTING.
7. 200A, 480V, 3 POLE, 4 WIRE FUSIBLE DISCONNECT SWITCH IN NEMA 3R ENCLOSURE. FUSE AT 200A.
8. 2½"C, 4#4/0, 1#6 GRD TO FISH CULTURE BUILDING.
9. #4/0 GROUND COUNTERPOISE CONDUCTOR. BURY 24", APPROXIMATELY 3'-0" FROM EDGE OF SLAB.
10. #2 BONDING JUMPER.
11. GROUND ROD. BOND NEUTRAL ON SECONDARY SIDE OF TRANSFORMER.
12. VERIFY DIMENSIONS OF TRANSFORMER, LEAVE 2'-2" CLEAR ON ALL SIDES OF BASE, NOT INCLUDING COOLING FINS.

LEEDSHILL-HERKENHOFF, INC.
ENGINEERS ALBUQUERQUE SANTA FE ARCHITECTS SAN DIEGO

DAVID A. DOZIER NEW MEXICO 9385 REGISTERED PROFESSIONAL ENGINEER
12.8.95

RECORD DRAWING

Date DEC 1995

These drawings have been revised based on the construction records of the owner. While the information submitted by the Owner will be assumed to be reliable, the Engineer will not be responsible for the accuracy of this information nor for errors or omissions which may appear in the record document as a result thereof.

32/90024.31ED3/DEXDETP/12-08-95/pds

REVISION	STATUS	DATE	DESCRIPTION	BY
2	AS-BUILT	12/95	RECORD DRAWING	WDG
1		12/94	NEW SHEET	

DEXTER NATIONAL FISH HATCHERY AND TECHNOLOGY CENTER – PHASE I

ELECTRICAL DETAILS

DATE	DESIGNED	DRAWN	CHECKED	DRAWING NO.
DEC. 1994	DAD/WDG	PDS	DAD/DRH	S.E.C. – NM – 133 – ___.–

E 19

SHEET ___ OF ___

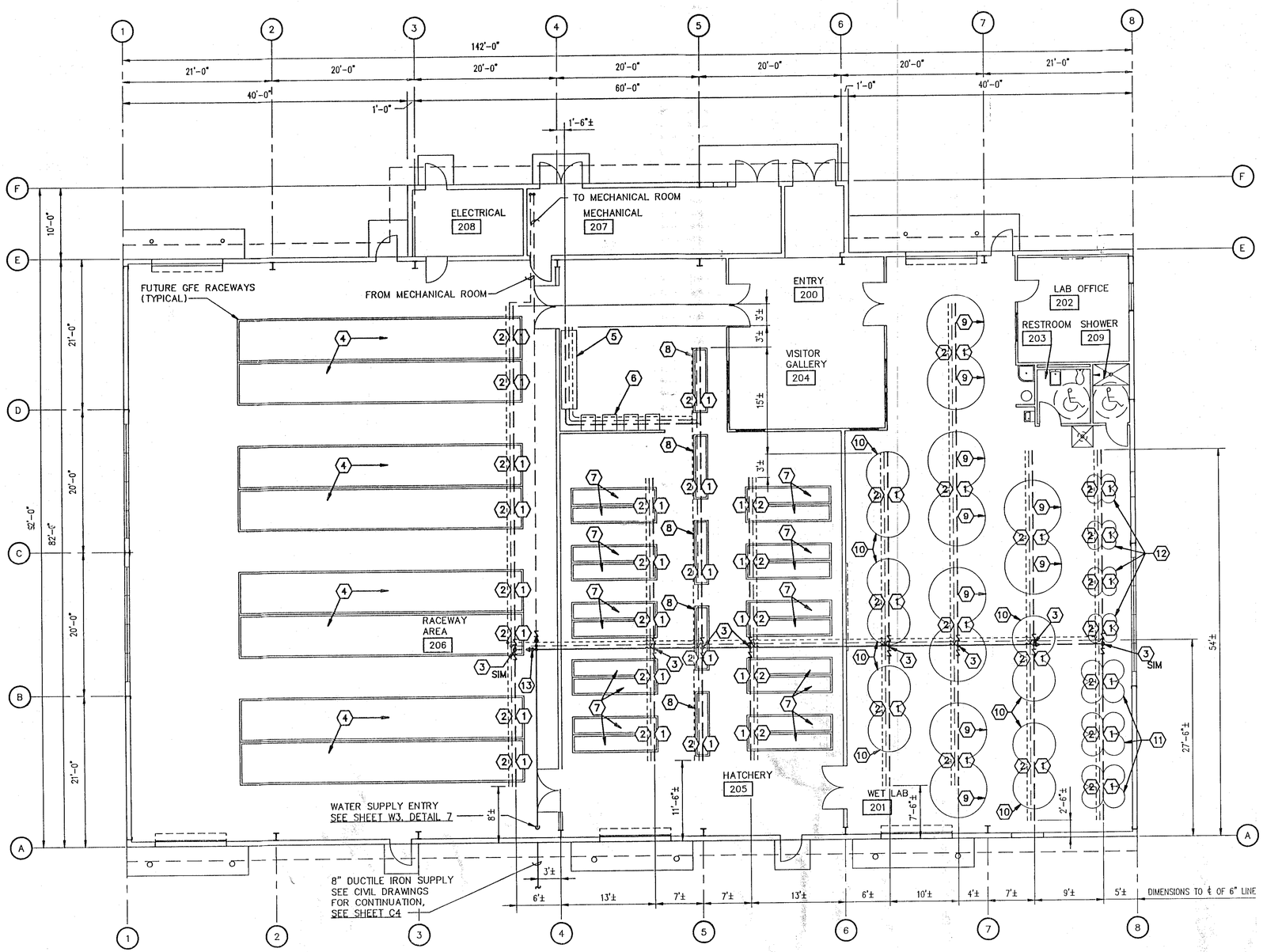

GENERAL NOTES

1. ALL WORK ON THIS SHEET IS BID SCHEDULE A, ADDITIVE ALTERNATE 1.
2. SEE ELECTRICAL DRAWINGS FOR ADDITIONAL WORK.
3. FOR ISOMETRIC AND SIZES OF PIPING RUNS, SEE SHEET W2.
4. COORDINATE EXACT LOCATION OF PIPING WITH CONTRACTING OFFICER.
5. ALL TANK DROPS ARE AT CENTERLINE OF RACEWAY OR CENTER OF MULTIPLE TANK ARRANGEMENTS.

KEYED NOTES ⬡

1. 6"x2" TANK DROP, SEE SHEET W3, DETAIL 1.
2. 2"x2" TANK DROP, SEE SHEET W3, DETAIL 2.
3. BRANCH CONNECTION, SEE SHEET W3, DETAIL 3.
4. GFE 6'x40' RACEWAY
5. GFE JAR TRAYS
6. GFE HEATH TRAYS
7. GFE 2.5'x12' TANK
8. GFE LIVING STREAMS
9. GFE 8' DIA TANK
10. GFE 6' DIA TANK
11. GFE 3' DIA TANK
12. GFE 2' DIA TANK
13. AIR VACUUM AND AIR RELEASE VALVE, SEE SHEET W3, DETAIL 5.

LEGEND

GFE GOVERNMENT FURNISHED EQUIPMENT

——— 8" PVC SCHEDULE 40

— — — — 6" PVC SCHEDULE 40

— — — — — 2" PVC SCHEDULE 40

- - - - - - - - - ½" OXYGEN LINE

REFLECTED CEILING PIPING PLAN

1 / W1 W1

SCALE : 1/8" = 1'-0"

0 4' 8' 16' 24'

1/8" = 1'-0" (A.F.S.)

0 1 2 3 4 5 6 7 8

METERS (A.F.S.)

RECORD DRAWING

Date DECEMBER 1995

These drawings have been revised based on the construction records of the owner. While the information submitted by the Owner will be assumed to be reliable, the Engineer will not be responsible for the accuracy of this information nor for errors or omissions which may appear in the record document as a result thereof.

96/90024.31CD2/DEXPP2/11-18-93/KHK

REVISION	STATUS	DATE	DESCRIPTION	BY
1	AS-BUILT	12/95	RECORD DRAWING	

DEXTER NATIONAL FISH HATCHERY AND TECHNOLOGY CENTER – PHASE I

FISH CULTURE BUILDING
REFLECTED CEILING PIPING PLAN

DATE	DESIGNED	DRAWN	CHECKED	DRAWING NO.
NOV. 1993	KWW	JDM	KWW	S.E.C. – NM – 133 – 161.0

W 1

R. WAYNE WESLEY NEW MEXICO 6974 REGISTERED PROFESSIONAL ENGINEER 11/21/95

LEEDSHILL-HERKENHOFF, INC. ENGINEERS ALBUQUERQUE SANTA FE ARCHITECTS SAN DIEGO

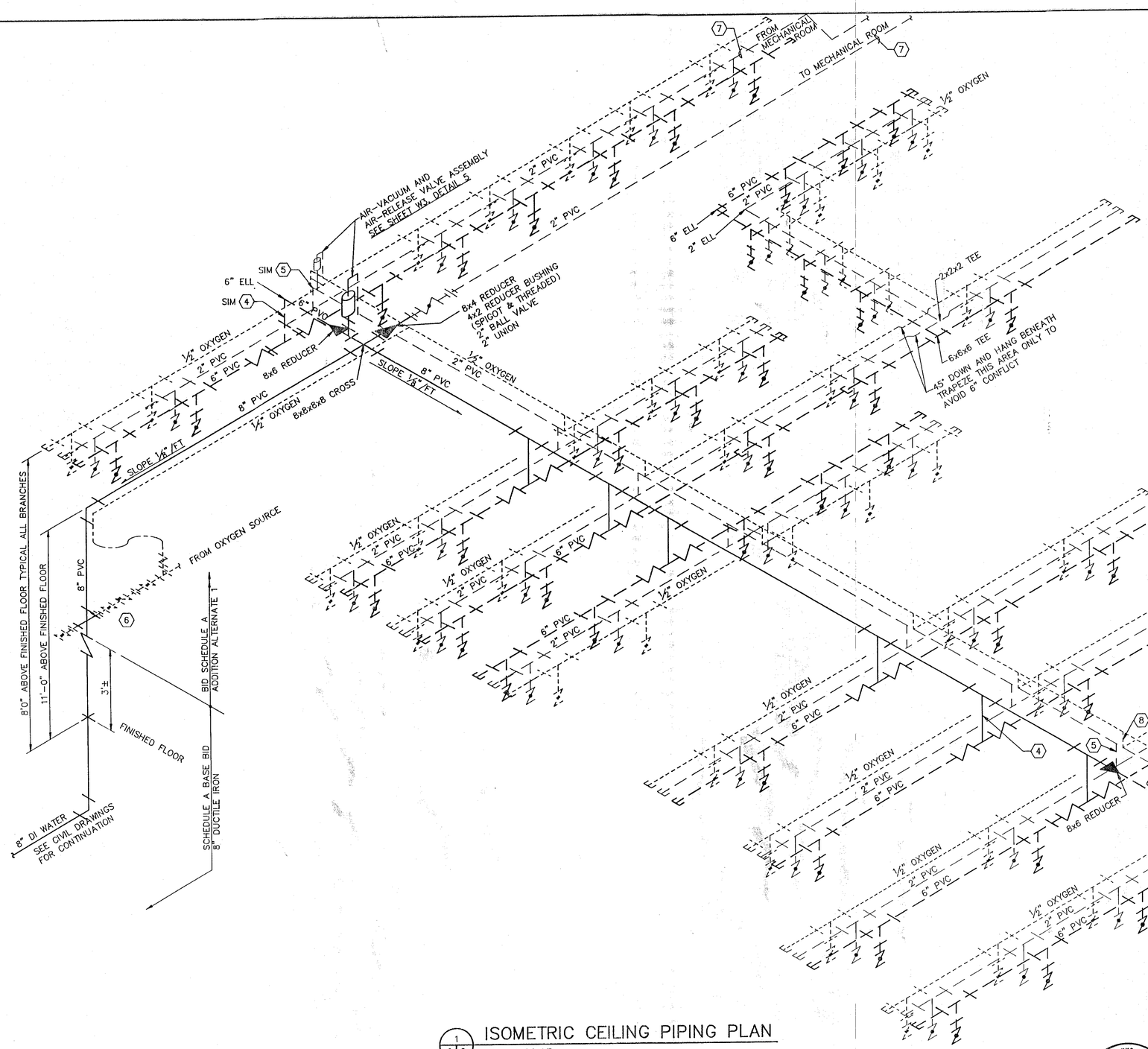

GENERAL NOTES

A ALL WORK ON THIS SHEET IS BID SCHEDULE A, ADDITIVE ALTERNATE 1. EXCEPT WHERE NOTED.

B SEE ELECTRICAL DRAWINGS FOR ADDITIONAL WORK.

LEGEND

- 8" PVC (SCHEDULE 40)
- 6" PVC (SCHEDULE 40)
- 2" PVC (SCHEDULE 40)
- ½" OXYGEN LINE
- BUTTERFLY VALVE (ALL 8" & 6" VALVES)
- BALL VALVE (ALL 2" VALVES)

KEYED NOTES ⬡

1. 6"x2" TANK DROP, SEE SHEET W3, DETAIL 1
   6x6x2 TEE
   SHORT NIPPLE
   2" BALL VALVE
2. 2"x2" TANK DROP, SEE SHEET W3, DETAIL 2
   2x2x2 TEE
   SHORT NIPPLE
   2" BALL VALVE
3. ½"x½"x½" TEE
   SHORT NIPPLE
   ½" OXYGEN SERVICE BALL VALVE
4. 8" BRANCH CONNECTION, SEE SHEET W3, DETAIL 3
   8x8x6 TEE
   6" SPOOL
   6x6x6 TEE
   SPIGOT WITH FLANGE EACH SIDE
   6" BUTTERFLY VALVE EACH SIDE
   SPIGOT WITH FLANGE EACH SIDE
   6" COUPLING EACH SIDE
   6" SPOOL EACH SIDE
5. 2" BRANCH CONNECTION, SEE SHEET W3, DETAIL 4
   2x2x2 TEE
   2" SPOOL
   2x2x2 TEE
   SHORT NIPPLE EACH SIDE
   2" BALL VALVE EACH SIDE
   2" UNION EACH SIDE
   2" SPOOL EACH SIDE
6. WATER SUPPLY ENTRY, SEE SHEET W3, DETAIL 7
7. ROUTE 2" LINE TO MECHANICAL ROOM INSIDE WALL AT COL ROW F. TERMINATE WITH CAP 3'-0" ABOVE FINISH FLOOR.
8. ½" BRANCH CONNECTION, SEE SHEET W3, DETAIL 9
   ½x½x½ TEE
   ½" SPOOL
   ½x½x½ TEE
   SHORT NIPPLE EACH SIDE
   ½" BALL VALVE EACH SIDE
   ½" UNION EACH SIDE
   ½" SPOOL EACH SIDE

ISOMETRIC CEILING PIPING PLAN

1 / W2 W2

NOT TO SCALE

RECORD DRAWING

Date DECEMBER 1995

These drawings have been revised based on the construction records of the owner. While the information submitted by the Owner will be assumed to be reliable, the Engineer will not be responsible for the accuracy of this information nor for errors or omissions which may appear in the record document as a result thereof.

48/90024.31CD4/ISOPIPE/11-18-93/KHK

REVISION	STATUS	DATE	DESCRIPTION	BY
1	AS-BUILT	12/95	RECORD DRAWING	DLJ

DEXTER NATIONAL FISH HATCHERY AND TECHNOLOGY CENTER – PHASE 1

FISH CULTURE BUILDING ISOMETRIC CEILING PIPING PLAN

DATE	DESIGNED	DRAWN	CHECKED	DRAWING NO.
NOV. 1993	KWW	MDJ	KWW	S.E.C. – NM – 133 – 162.0

W 2

E. WAYNE WELTY NEW MEXICO 6574 REGISTERED PROFESSIONAL ENGINEER 11/18/93

LEEDSHILL-HERKENHOFF, INC. ARCHITECTS SANTA FE SAN DIEGO ENGINEERS ALBUQUERQUE

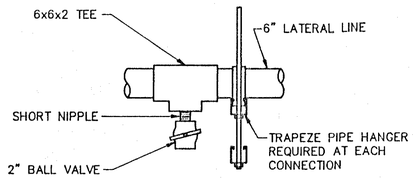

NOTE:

1. ALL PIPE SCHEDULE 40 PVC.

1 — 6"x2" TANK DROP
SCALE: NONE

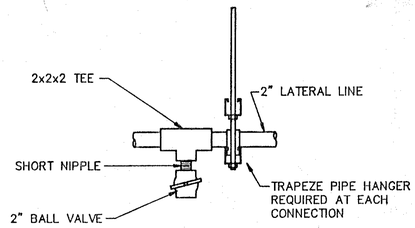

NOTE:

1. ALL PIPE SCHEDULE 40 PVC.

2 — 2"x2" TANK DROP
SCALE: NONE

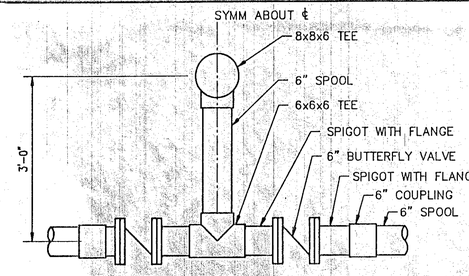

3 — 8" BRANCH CONNECTION
SCALE: NONE

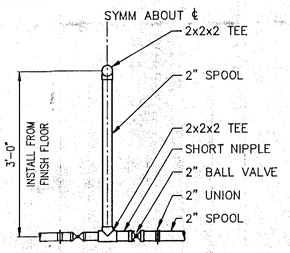

4 — 2" BRANCH CONNECTION
SCALE: NONE

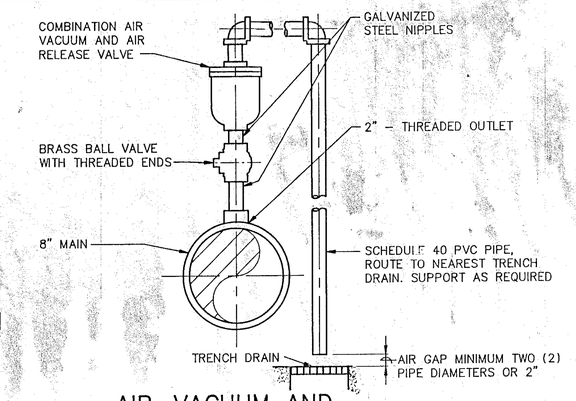

5 — AIR–VACUUM AND AIR–RELEASE VALVE ASSEMBLY
SCALE: NONE

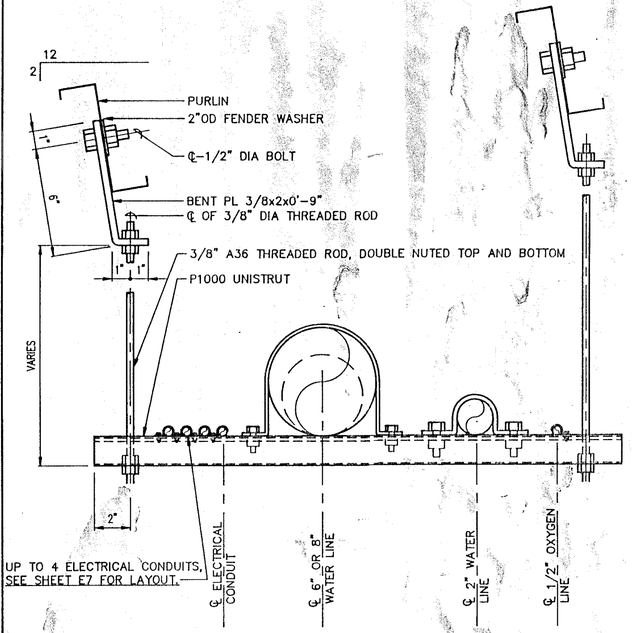

TRAPEZE HANGERS TO BE PLACED AT A MAXIMUM SPACING OF 5'–0"

6 — TRAPEZE HANGER DETAIL
SCALE: NONE

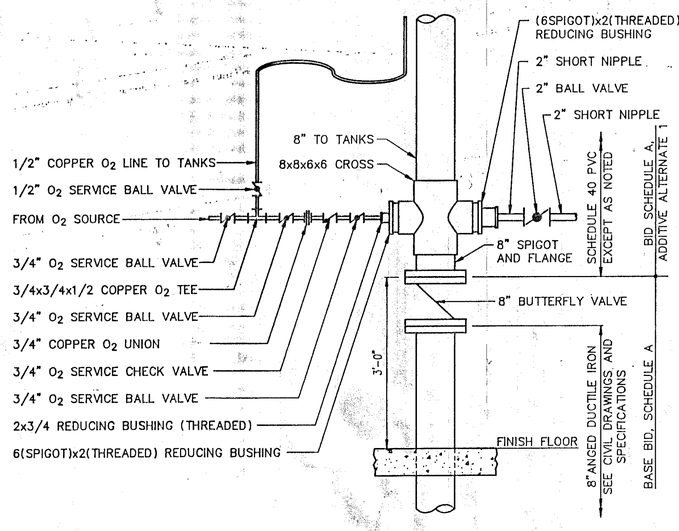

7 — WATER SUPPLY ENTRY
SCALE: NONE

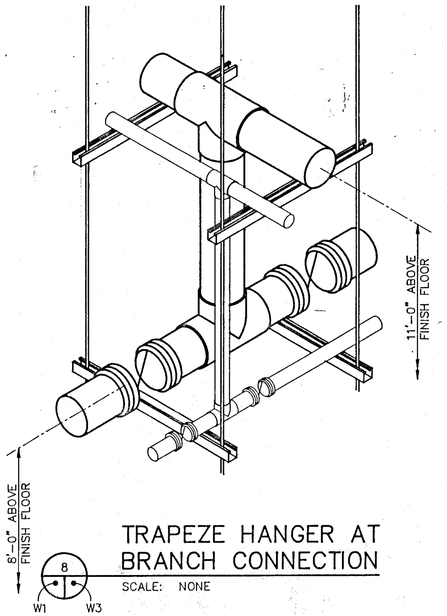

8 — TRAPEZE HANGER AT BRANCH CONNECTION
SCALE: NONE

GENERAL NOTES

A ALL WORK ON THIS SHEET IS BID SCHEDULE A, ADDITIVE ALTERNATE 1, EXCEPT WHERE NOTED.

B SEE ELECTRICAL DRAWINGS FOR ADDITIONAL WORK.

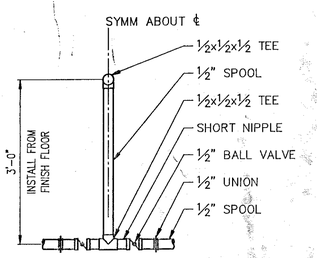

9 — 1/2" BRANCH CONNECTION
SCALE: NONE

RECORD DRAWING
Date DECEMBER 1995
These drawings have been revised based on the construction records of the owner. While the information submitted by the Owner will be assumed to be reliable, the Engineer will not be responsible for the accuracy of this information nor for errors or omissions which may appear in the record document as a result thereof.

1/90024.31CD2/W4/11-18-93/KHK

REVISION	STATUS	DATE	DESCRIPTION	BY
1	AS–BUILT	12/95	RECORD DRAWING	

DEXTER NATIONAL FISH HATCHERY AND TECHNOLOGY CENTER – PHASE 1

FISH CULTURE BUILDING DETAILS

DATE	DESIGNED	DRAWN	CHECKED	DRAWING NO.
NOV. 1993	KWW	KHK	KWW	S.E.C. – NM – 133 – 163.0

W 3

R. WAYNE WELLS NEW MEXICO 8574 REGISTERED PROFESSIONAL ENGINEER 11/18/93

LEEDSHILL–HERKENHOFF, INC. ENGINEERS SANTA FE ALBUQUERQUE ARCHITECTS SAN DIEGO