23222 CC/W33

SKF Explorer

Dimensions

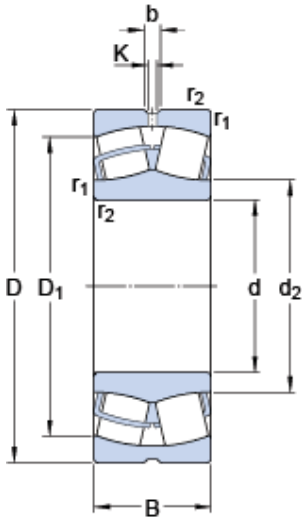

d		110	mm
D		200	mm
B		69.8	mm
d_2	≈	130	mm
D_1	≈	169	mm
b		8.3	mm
K		4.5	mm
$r_{1,2}$	min.	2.1	mm

Abutment dimensions

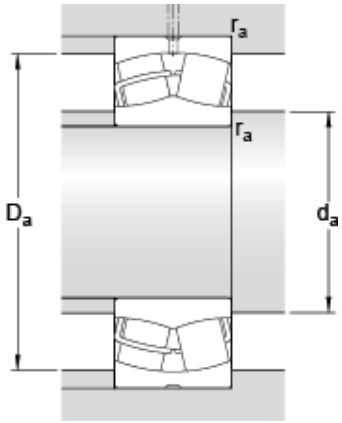

d_a	min.	122	mm
D_a	max.	188	mm
r_a	max.	2	mm

Calculation data

Basic dynamic load rating	C	626	kN
Basic static load rating	C_0	765	kN
Fatigue load limit	P_u	76.5	kN
Reference speed		2200	r/min
Limiting speed		3200	r/min
Calculation factor	e	0.33	
Calculation factor	Y_1	2	
Calculation factor	Y_2	3	
Calculation factor	Y_0	2	

Mass

Mass	9.85	kg