EMBASSY OF THE
UNITED STATES OF AMERICA
U. N. Avenue Gigiri NAIROBI, KENYA

LETTER TO PROSPECTIVE OFFERORS

Date: August 03, 2026

Dear Prospective Offeror:

Subject: Solicitation Number 19KE5026Q0082 **LOCHAB Borehole Drilling**

The Embassy of the United States of America invites you to submit a proposal for **LOCHAB Borehole Drilling.**

Enclosed is a Request for Quotes (RFQ) for **Borehole Drilling Services.** If you would like to submit a quotation, follow the instructions in Section J of the solicitation, complete the required portions of the attached document.

The U.S. Government intends to award a contract to the responsible company submitting an acceptable offer at the lowest price. We intend to award a contract based on initial proposals, without holding discussions, although we may hold discussions with companies in the competitive range if there is a need to do so.

Quotations are due by ***August 14, 2026 10:00 a.m***. No quotations will be accepted after this time. Quotations must be in English and incomplete quotations will not be accepted.

If you intend to submit a proposal, you should thoroughly examine all documents contained in the contract solicitation package. The Embassy intends to hold a pre-proposal conference and conduct a site visit (see L.6, 52.236-27). All prospective offerors who have received a solicitation package are invited to attend. **The pre-proposal conference will be held at LOCHAB on August 7, 2026 at 10 a.m.**

Submit any questions you may have concerning the solicitation documents in writing by August 10, 2026 at 8 a.m.to NairobiGSO-Contracts@state.gov. Responses will be sent in writing to all contractors on our list of interested parties.

Your quotation must be submitted electronically to nairobigsofp@state.gov. It is important to make sure the submission is made in specific size and format; in MS-Word 2007/2010 or MS-Excel 2007/2010 or Adobe Acrobat (pdf) file format. The file size must not exceed 30MB. If the file size should exceed the 30MB, the submission must be made in separate files and attached to separate emails with less than 30MB each.

In order for a quotation to be considered, you must also complete and submit the following:

1. SF-1442
2. Section A, Pricing
3. Section L Representations and Certifications
4. Additional information as required in Section J

5. Proof of SAM Registration

The contract will be a firm fixed price contract, with no adjustment for any escalation in costs or prices of labor or materials. Each offeror will be responsible for determining the amount of labor and materials that will be required to complete the project, and for pricing its proposal accordingly.

Please be advised that each offeror is responsible for furnishing complete information to its subcontractor and suppliers, such as details and quantities required by the drawings and specifications. Subcontractors and suppliers should not be referred to the Embassy or the Engineer for determining the amount or quantities of materials required.

The Borehole drilling completion time is **30 construction days**, commencing on issuance of notice to proceed. In the event of an unauthorized or unexcused delay in completing the project, liquidated damages in the amount of **USD $500** per calendar day will be assessed until substantial completion of the project is achieved.

The Contracting Officer reserves the right to reject any and all proposals and to waive any informality in proposals received. In addition, the Embassy reserves the right to establish a competitive range of one or more offerors and to conduct further negotiations concerning price and other terms before awarding the contract, or to award without discussions.

Offerors shall be registered in the SAM (System for Award Management) database at https://www.sam.gov prior to submittal of their offer/proposal as prescribed under FAR 4.1102. Failure to be registered at time of proposal submission may deem the offeror's proposal to be considered non-responsible and no further consideration will be given. Therefore, offerors are highly encouraged to register immediately if they are interested in submitting a response to this requirement.

Sincerely,

Leslie Marks
Contracting Officer

Enclosure:

TABLE OF CONTENTS

SF-1442 COVER SHEET

A. PRICING

B. STATEMENT OF WORK

C. PACKAGING AND MARKING

D. INSPECTION AND ACCEPTANCE

E. DELIVERIES AND PERFORMANCE

F. CONTRACT ADMINISTRATION DATA

G. SPECIAL TERMS AND CONDITIONS

H. CLAUSES

I. LIST OF ATTACHMENTS

Attachment 1: Standard Form 25, "Performance and Guaranty Bond"
Attachment 2: Standard Form 25A, "Payment Bond"
Attachment 3: Sample Letter of Bank Guaranty
Attachment 4: Breakdown of Price by Divisions of Specifications
Attachment 5: Drawings
Appendix 1: Elevation details
Appendix 2: Piping plan and above surface elevations.
Appendix 3: Plumbing riser dwg

Attachment 6: Specifications
Appendix 4. Site Location.
Appendix 5: AHA.
Appendix 6: Propose Work Schedule Sample.
Appendix 7: Pump Specifications.
Appendix 8: Pump Controller Specifications.

J. INSTRUCTIONS ON HOW TO SUBMIT A QUOTATION

K. EVALUATION CRITERIA

L. REPRESENTATIONS, CERTIFICATIONS AND OTHER STATEMENTS

SOLICITATION, OFFER, AND AWARD *(Construction, Alteration, or Repair)*	1. SOLICITATION NO. 19KE5026Q0082	2. TYPE OF SOLICITATION ☐ SEALED BID (IFB) [x] NEGOTIATED (RFP)	3. DATE ISSUED August 3, 2026	PAGE OF PAGES 4 of 80

IMPORTANT - The "offer" section on the reverse must be fully completed by offeror.

4. CONTRACT NO.	5. REQUISITION/PURCHASE REQUEST NO. PR 158851412	6. PROJECT NO.

7. ISSUED BY CODE	8. ADDRESS OFFER TO
U.S. Embassy Nairobi GSO Contracting Officer	U.S. Embassy Nairobi

9. FOR INFORMATION CALL: ➔	A. NAME Leslie Marks	B. TELEPHONE NO. *(Include area code)* ***(NO COLLECT CALLS)*** 020-3636000

SOLICITATION

NOTE: In sealed bid solicitations "offer" and "offeror" mean "bid" and "bidder."

10. THE GOVERNMENT REQUIRES PERFORMANCE OF THE WORK DESCRIBED IN THESE DOCUMENTS *:*

LOCHAB Borehole Drilling Solicitation # 19KE5026Q0082 dated August 03, 2026

11. The Contractor shall begin performance within __5__ calendar days and complete it within __30__ Construction days after receiving

☐ award, ☒ notice to proceed. This performance period is ☐ mandatory, ☐ negotiable. *(See _____.)*

12A. THE CONTRACTOR MUST FURNISH ANY REQUIRED PERFORMANCE AND PAYMENT BONDS? *(If "YES," indicate within how many calendar days after award in Item 12B.)* ☒ YES ☐ NO	12B. CALENDAR DAYS 10

13. ADDITIONAL SOLICITATION REQUIREMENTS:

A. Sealed offers in original and ____ copies to perform the work required are due at the place specified in Item 8 by _____ *(hour)* local time _____ *(date)*. If this is a sealed bid solicitation, offers must be publicly opened at that time. Sealed envelopes containing offers shall be marked to show the offeror's name and address, the solicitation number, and the date and time offers are due.

B. An offer guarantee ☒ is, ☐ is not required.

C. All offers are subject to the (1) work requirements, and (2) other provisions and clauses incorporated in the solicitation in full text or by reference.

D. Offers providing less than __90___ calendar days for Government acceptance after the date offers are due will not be considered and will be rejected.

NSN 7540-01-155-3212 | 1442-101 | **STANDARD FORM**

1442 (REV. 4-85)
Computer Generated

Prescribed by GSA
FAR (48 CFR)

53.236-1(e)

OFFER *(Must be fully completed by offeror)*

14. NAME AND ADDRESS OF OFFEROR *(Include ZIP Code)*	15. TELEPHONE NO. *(Include area code)*
	16. REMITTANCE ADDRESS *(Include only if different than Item 14)*
CODE FACILITY CODE	

17. The offeror agrees to perform the work at the prices specified below in strict accordance with the terms of this solicitation, if this offer is accepted by the Government within __90___ calendar days after the date offers are due. *(Insert any number equal to or greater than the minimum requirement stated in Item 13D. Failure to insert any number means the offeror accepts the minimum in Item 13D.*

AMOUNTS ➔

18. The offeror agrees to furnish any required performance and payment bonds.

19. ACKNOWLEDGMENT OF AMENDMENTS

The offeror acknowledges receipt of amendments to the solicitation -- give number and date of each

AMENDMENT NO.										
DATE										

20A. NAME AND TITLE OF PERSON AUTHORIZED TO SIGN OFFER *(Type or print)*	20B. SIGNATURE	20C. OFFER DATE

AWARD *(To be completed by Government)*

21. ITEMS ACCEPTED:

22. AMOUNT	23. ACCOUNTING AND APPROPRIATION DATA	
24. SUBMIT INVOICES TO ADDRESS SHOWN IN *(4 copies unless otherwise specified)*	ITEM ➔	25. OTHER THAN FULL AND OPEN COMPETITION PURSUANT TO ☐ 10 U.S.C. 2304(c)( ) ☐ 41 U.S.C. 253(c)( )
26. ADMINISTERED BY CODE		27. PAYMENT WILL BE MADE BY

CONTRACTING OFFICER WILL COMPLETE ITEM 28 OR 29 AS APPLICABLE

☐ 28. NEGOTIATED AGREEMENT *(Contractor is required to sign this document and return ____ copies to issuing office.)* Contractor agrees to furnish and deliver all items or perform all work, requisitions identified on this form and any continuation sheets for the consideration slated in this contract. The rights and obligations of the parties to this contract shall be governed by (a) this contract award, (b) the solicitation, and (c) the clauses, representations, certifications, and specifications or	☐ 29. AWARD *(Contractor is not required to sign this document.)* Your offer on this solicitation is hereby accepted as to the items listed. This award consummates the contract, which consists of (a) the Government solicitation and your offer, and (b) this contract award. No further contractual document is necessary.
30A. NAME AND TITLE OF CONTRACTOR OR PERSON AUTHORIZED TO SIGN *(Type or print)*	31A. NAME OF CONTRACTING OFFICER *(Type or print)*
30B. SIGNATURE / 30C. DATE	31B. UNITED STATES OF AMERICA / BY / 31C. AWARD DATE

Computer Generated
BACK (REV. 4-85)

STANDARD FORM 1442

SECTION A - PRICING

A. PRICE

The Contractor shall complete all work (including furnishing all labor, material, equipment and services) required under this contract for the following firm fixed price and within the time specified. This price shall include all labor, materials, overhead (including insurance required by FAR 52.228-3, Workers' Compensation and War-Hazard Insurance), and profit.

Definitions and Abbreviations

"B.S." shall mean the current British Standard Specification published by the British Standards Institution, 2 Park Street, London W.1. England.
"No.": Shall mean **Number**
"LS.": Shall mean **Lump Sum**
"M.": Shall mean **Meters**
"Kg.": Shall mean **Kilograms.**
"Hr.": Shall mean **Hour.**

Applicable Standards and Codes

The following codes and technical criteria and those referenced therein shall be required for this project. References within each document listed below shall be required and adhered to. If there is conflict in the criteria the most stringent requirement shall be applied. The publications to be taken into consideration shall be those of the most recent editions.

1. US ARMY COPRS OF ENGINEERS
2. ACI 301M Specifications for Structural Concrete (2005), American Concrete Institute
3. ACI 318 Building Code Requirements for Structural Concrete (2005), American Concrete Institute
4. ACI 530/ASCE 5/TMS 402, Building Code Requirements for Masonry Structures (2005)
5. AISC 360 Specifications for Structural Steel Buildings (2005), American Institute of Steel Construction
6. ASCE 7, Minimum Design Loads for Buildings and Other Structures (2005)
7. ASTM - American Society for Testing and Materials
8. ASTM-D-1586 Standard Test Method for Standard Penetration Test
9. AWS D1.1, Structural Welding Code – Steel (2004), American Welding Society
10. Factory Mutual (FM) Approval Guide-Fire Protection, latest edition
11. IBC - International Building Codes, 2006 edition (and its referenced codes including those inset below)
12. IPC – International Plumbing Code, latest edition
13. Codes and Standards of the National Fire Protection Association (NFPA)
[As applicable and enacted in 2002 or later, unless otherwise noted]
14. UFC 1-200-01, Design: General Building Requirements
15. UFC 1-300-07A, Design Build Technical Requirements
16. UFC 3-220-03fa, Soils and Geology

17. UFC 1-300-09N, Design Procedures
18. UFC 3-310-01, Structural Load Data
19. UFC 3-310-02A, Structural Design Criteria for Buildings
20. UFC 3-400-01, Design: Energy Conservation, latest edition
21. Underwriters' Laboratories (UL) Fire Protection Equipment Directory (2010)
22. UL Standards (as applicable)
23. Unified Facility Criteria (UFC) is available online at
http://www.wbdg.org/ccb/browse_cat.php?o=29&c=4
24. British Standards (B.S.)
25. Structural Codes of Practice (C.P.)
26.National Electrical Code (N.E.C.)

Standards other than those mentioned above may be accepted if the standards chosen are internationally recognized and meet the minimum requirements of the specified standards. The Contractor shall be prepared to submit proof of this if requested.

A.1.1 Pricing Notes
Offerors are strongly advised to read and understand the
following notes before pricing this section.

1. The unit of billing in this section is indicated under column 4 of the pricing table.

2. Clearing debris with speed on a daily basis as they arise, clearing of affected areas, and removal of the debris from site to Nairobi County Government approved dumping sites. Accumulation of debris within the site premises shall not be allowed. Removal of Debris shall be coordinated with the American Embassy

3. Drilling works shall be carefully executed with the particular aim of minimizing damage to adjacent structures.

4. The Contractor must take all steps necessary to safeguard existing and adjacent property, make good at his own expense any damage to persons or property caused thereon, and hold the Employer indemnified against any such claim arising.

5. The Contractor will be held fully responsible for the safety of the existing and adjacent buildings and for any damage caused in consequence of these works. He must reinstate all damages at his own expense and indemnify the Employer against any loss.

6. The Contractor must take such steps and exercise such care and diligence as to minimize nuisance from dust, noise, or any other cause to the occupiers of the existing and adjacent property.

7. The amounts quoted shall be deemed to be inclusive of all handling of items removed from site.

8. The Contractor shall not alter or otherwise qualify the text of these Bills of Quantities. Any alteration or qualification made without authority will be ignored and the text of the Bills of Quantities as printed will be adhered to.

9. The Contractor shall be deemed to have made allowance in his prices generally to cover items of Preliminaries or additions to Prime Cost Sums or other items, if these have not been priced against the respective items.

10. In no case will any expenses incurred by Contractors in preparation of this Offer be reimbursed.

11.The Contractor is solely responsible for the accurate ordering of materials in accordance with the Drawings and Consultant's Instructions and no claims for any loss or expense will be entertained for orders for materials based upon the Bills of Quantities.

12. Compliance with laws and regulations see G.4.0.

A.1.2 Pricing Table

A.1.2.1.	**Borehole Drilling-360 Meters in Runda Area, Nairobi.**	Qty	Unit	Rate	Amount
A	Mobilization setup camp /restitution/demobilization upon completion	1	L.S.		
B	Drilling Rig set-up at the site	1	L.S.		
A.1.2.2.	**Ground Sub-Surface Control under The Swampy Conditions**				
A	Hole opener to the depth of 200 meters at 12” 300mm to permit installation of the sanitation sleeve	24	M.		
B	Supply and installation of 254mm 10” Heavy Duty Steel Casings	24	M.		
C	Bentonite seal between the subsurface casing for contamination prevention.	1	L.S.		
D	Fill the upper surface with inert fill	1	L.S.		
A.1.2.3.	**Main Drilling Works**				
A	Depth not exceeding 5.0 Meters for the conductor pipe -254mm Diameter	5	M.		
B	Drilling at 225mm for the depth 5.0m -100.0m	95	M.		
C	Drilling at 225mm for the depth 100.0m-200.0m	100	M.		
D	Drilling at 225mm for the depth 200.0m-300.0m	100	M.		
E	Drilling at 225mm for the depth 300.0m-400.0m	100	M.		
F	Drilling at 225mm for the depth > 400.0m	1	M.		
G	Sampling and logging works at 2.0m Intervals	160	No.		

H	Anticipated Drilling foam usage- for improvement of cuttings recovery	1	L.S.		
I	Supply drilling and domestic water for both down hole injection and domestic purposes at the site	1	L.S.		
A.1.2.4.	**Casings and Screens**				
A	153mm diameter Steel Casings class B- Plain	260	M		
B	153mm diameter Steel Screens Class B in Plasma Slots	60	M		
C	154 mm Slide in borehole cap	1	No.		
D	**Supply and install quartz pea gravel, 2-4mm grain size**	15	Tons		
E	Backfill to 10 Meters below ground level with drill cuttings	10	M		
A.1.2.5.	**Development**				
A	Physical development through air-jetting techniques	4	Hr		
B	Chemical development through Calgon Injection	1	25Kg		
C	Bentonite Seal	1	50Kg		
A.1.2.6.	**Aquifer Testing**				
A	Installation of test-pumping unit& removal	1	Item		
B	Testing (Pre-test, step and constant draw down tests	24	Hr		
C	Testing (Recovery Test)	6	Hr		
A.1.2.7					
	Water sample for chemical & physical analysis	1	L.S.		
	Boreholes head works complete-plinth	1	No.		
	Permanent casings for the conductor pipe	6	M.		

A.1.2.8: **SUPPLY AND INSTALLATION OF A GRUNDFOS PUMP SP 17-27 C/W MOTOR**					
	Description	**Qty**	**Unit**	**Rate**	**Amount.**
A	Procure, deliver to site and install a Grundfos **SP 17-27 c/w 15KW-20HP** motor at **260 meters installation depth**	1	No.		
B	LOGIC CONTROL PANEL: - Control panel **18.5KW/25HP** – 415volts/3 phase complete with under and over-voltage protection; water level relay.	1	No.		
C	MP 204 to enhance the pump protection as Digital Black Box	1	No.		
D	2.5" Dunwell water meter or other approved	1	No.		
E	2.5" Class B GI Pipes to an installation depth of **260 Meters**	260	M.		

F	2.5" Heavy Duty C.I Adaptor Set - Top and Bottom	1	No.		
G	16mm²/4 core submersible pump cable	265	M.		
H	GFSO Splicing kit - Cable joint	1	No.		
I	Well head in 2.5" mechanical fittings: • Borehole Cover plate • 2.5"Tee connection,2.5 " bends • 2.5 " drop pipe to meter chamber C/w nipple • Start up pipe section to rising main. • Ancillary sockets/boss white/PTE/Tapes • Junction Box	1	Item		
J	Dipper tubes PVC class 'D' heavy duty -25mm	30	No.		
K	Looping cables 16mm²/ 4 core armored	20	M.		
L	Water Level cable – 1.5mm²/ 2 Core	20	M.		
M	Electrode cable – Dual Lordex Cable	265	M.		
N	Electrode pencils	1	Pair		
O	2.5."Non-return valve – peglar	1	No.		
P	2.5." Peglar Gate Valve	1	No.		
Q	Borehole Installation sundries- Cable ties and tapes accessories	1	Item		
R	Pump installation labor, testing and commissioning	1	Item		
	Total Bill Works Carried To Grand Summary - Borehole Equipping Works				

A.2 VALUE ADDED TAX

The Government will not reimburse the Contractor for Value Added Tax (VAT) under this contract. All taxable supplies (goods and services) to the United States Embassy in Kenya are exempt from Value Added Tax. See the VAT Act, 2013, 2nd Schedule, Part B 'Zero Rates Supplies to Public Bodies, Privileged persons and Institutions', para (3). Vendors are therefore required to present invoices without a tax element, i.e., indicate 0% VAT on all invoices. The Purchase Orders or Contracts issued by the United States Embassy will serve as the basis for Zero Rating when vendors are accounting for VAT with the Kenya Revenue Authority.

SECTION B - STATEMENT OF WORK

The character and scope of the work are set forth in the contract. The Contractor shall furnish and install all materials required by this contract.

In case of differences between small and large-scale drawings, the latter will govern. Where a portion of the work is drawn in detail and the remainder of the work is indicated in outline, the parts drawn in detail shall apply also to all other portions of the work.

SECTION C - PACKAGING AND MARKING

Mark materials delivered to the site as follows:

Reserved (Not applicable)

SECTION D - INSPECTION AND ACCEPTANCE

The COR, or his/her authorized representatives, will inspect from time to time the services being performed and the supplies furnished to determine whether work is being performed in a satisfactory manner, and that all supplies are of acceptable quality and standards.

The Contractor shall be responsible for any countermeasures or corrective action, within the scope of this contract, which may be required by the Contracting Officer as a result of such inspection.

D.1 SUBSTANTIAL COMPLETION

(a) "*Substantial Completion*" means the stage in the progress of the work as determined and certified by the Contracting Officer in writing to the Contractor, on which the work (or a portion designated by the Government) is sufficiently complete and satisfactory. Substantial completion means that the property may be occupied or used for the purpose for which it is intended, and only minor items such as touch-up, adjustments, and minor replacements or installations remain to be completed or corrected which:

(1) do not interfere with the intended occupancy or utilization of the work, and
(2) can be completed or corrected within the time period required for final completion.

(b) The "date of substantial completion" means the date determined by the Contracting Officer or authorized Government representative as of which substantial completion of the work has been achieved.

Use and Possession upon Substantial Completion - The Government shall have the right to take possession of and use the work upon substantial completion. Upon notice by the Contractor that the work is substantially complete (a Request for Substantial Completion) and an inspection by the Contracting Officer or an authorized Government representative (including any required tests), the Contracting Officer shall furnish the Contractor a Certificate of Substantial Completion. The certificate will be accompanied by a Schedule of Defects listing items of work remaining to be performed, completed, or corrected before final completion and acceptance. Failure of the Contracting Officer to list any item of work shall not relieve the Contractor of responsibility for complying with the terms of the contract. The Government's possession or use upon substantial completion shall not be deemed an acceptance of any work under the contract.

D.2 FINAL COMPLETION AND ACCEPTANCE

D.2.1 "Final completion and acceptance" means the stage in the progress of the work as determined by the Contracting Officer and confirmed in writing to the Contractor, at which all work required under the contract has been completed in a satisfactory manner, subject to the discovery of defects after final completion, and except for items specifically excluded in the notice of final acceptance.

D.2.2 The "*date of final completion and acceptance*" means the date determined by the Contracting Officer when final completion of the work has been achieved, as indicated by written notice to the Contractor.

D.2.3 FINAL INSPECTION AND TESTS. The Contractor shall give the Contracting Officer at least five (5) days advance written notice of the date when the work will be fully completed and ready for final inspection and tests. Final inspection and tests will be started not later than the date specified in the notice unless the Contracting Officer determines that the work is not ready for final inspection and so informs the Contractor.

D.2.4 FINAL ACCEPTANCE. If the Contracting Officer is satisfied that the work under the contract is complete (with the exception of continuing obligations), the Contracting Officer shall issue to the Contractor a notice of final acceptance and make final payment upon:

- Satisfactory completion of all required tests,

- A final inspection that all items by the Contracting Officer listed in the Schedule of Defects have been completed or corrected and that the work is finally complete (subject to the discovery of defects after final completion), and

- Submittal by the Contractor of all documents and other items required upon completion of the work, including a final request for payment (Request for Final Acceptance).

SECTION E - DELIVERIES AND PERFORMANCE

52.211-10 COMMENCEMENT, PROSECUTION, AND COMPLETION OF WORK (APR 1984)

The Contractor shall be required to:

(a) commence work under this contract within 10 (Ten) calendar days after the date the Contractor receives the notice to proceed,

(b) prosecute the work diligently, and,

(c) complete the entire work ready for use not later than 30 (Thirty) actual construction working days.

The time stated for completion shall include final cleanup of the premises.

52.211-12 LIQUIDATED DAMAGES - CONSTRUCTION (SEPT 2000)

(a) If the Contractor fails to complete the work within the time specified in the contract, or any extension, the Contractor shall pay liquidated damages to the Government in the amount of **$500** for each calendar day of delay until the work is completed or accepted.

(b) If the Government terminates the Contractor's right to proceed, liquidated damages will continue to accrue until the work is completed. These liquidated damages are in addition to excess costs of repurchase under the Default clause.

CONTRACTOR'S SUBMISSION OF CONSTRUCTION SCHEDULES

(a) The time for submission of the schedules referenced in FAR 52.236-15, "Schedules for Construction Contracts", paragraph (a), is hereby modified to reflect the due date for submission as **10** calendar days after receipt of an executed contract".

(b) These schedules shall include the time by which shop drawings, product data, samples and other submittals required by the contract will be submitted for approval.

(c) The Contractor shall revise such schedules (1) to account for the actual progress of the work, (2) to reflect approved adjustments in the performance schedule, and (3) as required by the Contracting Officer to achieve coordination with work by the Government and any separate contractors used by the Government. The Contractor shall submit a schedule, which sequences work so as to minimize disruption at the job site.

(d) All deliverables shall be in the English language and any system of dimensions (English or metric) shown shall be consistent with that used in the contract. No extension of time shall be allowed due to delay by the Government in approving such deliverables if the Contractor has failed to act promptly and responsively in submitting its deliverables. The

Contractor shall identify each deliverable as required by the contract.

(e) Acceptance of Schedule: When the Government has accepted any time schedule; it shall be binding upon the Contractor. The completion date is fixed and may be extended only by a written contract modification signed by the Contracting Officer. Acceptance or approval of any schedule or revision thereof by the Government shall not:

(1) Extend the completion date or obligate the Government to do so,

(2) Constitute acceptance or approval of any delay, or

(3) Excuse the Contractor from or relieve the Contractor of its obligation to maintain the progress of the work and achieve final completion by the established completion date.

NOTICE OF DELAY

If the Contractor receives a notice of any change in the work, or if any other conditions arise which are likely to cause or are actually causing delays which the Contractor believes may result in late completion of the project, the Contractor shall notify the Contracting Officer. The Contractor's notice shall state the effect, if any, of such change or other conditions upon the approved schedule, and shall state in what respects, if any, the relevant schedule, or the completion date should be revised. The Contractor shall give such notice promptly, not more than ten (5) days after the first event giving rise to the delay or prospective delay. Only the Contracting Officer may revise the approved time schedule.

NOTICE TO PROCEED

(a) After receiving and accepting any bonds or evidence of insurance, the Contracting Officer will provide the Contractor a Notice to Proceed. The Contractor must then prosecute the work, commencing and completing performance not later than the time period established in the contract.

(b) It is possible that the Contracting Officer may elect to issue the Notice to Proceed before receipt and acceptance of any bonds or evidence of insurance. Issuance of a Notice to Proceed by the Government before receipt of the required bonds or insurance certificates or policies shall not be a waiver of the requirement to furnish these documents.

WORKING HOURS

All work shall be performed during **regular work days (8:00am to 5:00p.m from Monday through Saturday)**, except for the holidays identified below. Other hours, if requested by the Contractor, may be approved by the Contracting Officer's Representative (COR). The Contractor shall give 24 hours in advance to COR who will consider any deviation from the hours identified above. Changes in work hours, initiated by the Contractor, will not be a cause for a price increase. The

work must be carried out to cause the minimum inconvenience to the occupants of the adjoining premises.

(a) The Department of State observes the following days* as holidays:

Holiday	**Remark**
New Year's Day	American/Kenyan
Birthday of Martin Luther King, Jr.	American
Washington's Birthday	American
Good Friday	Kenyan
Easter Monday	Kenyan
Labor Day	Kenyan
Eid-ul-Fitr	Kenyan
Memorial Day	American
Madaraka Day	Kenyan
Independence Day	American
Idd-ul-Azha	Kenyan
Labor Day	American
Huduma Day	Kenyan
Columbus Day	American
Mashujaa Day	Kenyan
Veterans Day	American
Thanksgiving Day	American
Jamhuri Day	Kenyan
Christmas Day	American/Kenyan
Utamaduni Day	Kenyan

*Any other day designated by Federal law, Executive Order or Presidential Proclamation.

When any such day falls on a Saturday, the preceding Friday is observed; when any such day falls on a Sunday, the following Monday is observed. Observance of such days by Government personnel shall not be cause for additional period of performance or entitlement to compensation except as set forth in the contract. If the Contractor's personnel work on a holiday, no form of holiday or other premium compensation will be reimbursed either as a direct or indirect cost, unless authorized pursuant to an overtime clause elsewhere in this contract.

PRECONSTRUCTION CONFERENCE

A preconstruction conference will be held within 10 days after contract award at **LOCHAB Construction Site** to discuss the schedule, submittals, notice to proceed, mobilization and other important issues that effect construction progress. See FAR 52.236-26, Preconstruction Conference.

DELIVERABLES - The following items shall be delivered under this contract:

Description	Quantity	Deliver Date	Deliver To
Section G. Securities/Insurance	1	10 days after award	CO
Section E. Construction Schedule	1	10 days after award	COR
Section E. Preconstruction Conference	1	Within 5 days after award	COR
Section G. Personnel Biographies	1	Within 5 days after award	COR
Section F. Payment Request	1	On Completion of Borehole drilling works	COR
Section D. Request for Substantial Completion	1	2 days before inspection	COR
Section D. Request for Final Acceptance	1	2 days before inspection	COR
Section E. Additional Hours	1	No later than 24 hours in advance of need	COR
Section E. Notice of Delay	1	Within 5 days after event	CO
Section G 8.0 Differing Site Condition	1	Within 5 days of occurrence	COR
Section H. 652.236-70	1	Within 5 days after award	COR

SECTION F – CONTRACT ADMINISTRATION DATA

652.242-70 CONTRACTING OFFICER'S REPRESENTATIVE (COR) (AUG 1999)

(a) The Contracting Officer may designate in writing one or more Government employees, by name or position title, to take action for the Contracting Officer under this contract. Each designee shall be identified as a Contracting Officer's Representative (COR). Such designation(s) shall specify the scope and limitations of the authority so delegated; provided, that the designee shall not change the terms or conditions of the contract, unless the COR is a warranted Contracting Officer, and this authority is delegated in the designation.

(b) The COR for this contract is the **Project Engineer.**

Payment: The Contractor's attention is directed to Section H, 52.232-5, "Payments Under Fixed-Price Construction Contracts". The following elaborates on the information contained in that clause.

Requests for payment, may be made no more frequently than monthly. Payment requests shall cover the value of labor and materials completed and in place, including a prorated portion of overhead and profit.

After receipt of the Contractor's request for payment, and on the basis of an inspection of the work, the Contracting Officer shall make a determination as to the amount, which is then due. If the Contracting Officer does not approve payment of the full amount applied for, less the retainage allowed by in 52.232-5, the Contracting Officer shall advise the Contractor as to the reasons.

Under the authority of 52.232-27(a), the 14 day period identified in FAR 52.232-27(a)(1)(i)(A) is hereby changed to 30 days.

G.3.2 DETAIL OF PAYMENT REQUESTS

Each application for payment shall cover the value of labor and materials completed and in place, including a prorated portion of overhead and profit. The Government will make payments no more frequently than monthly, unless otherwise provided in this contract.

Invoices for U.S. Government employees shall be submitted in an original to the following address (designated billing office only for the purpose of submitting invoices):

Invoices should be sent electronically to the COR and Attn: FMO
Kindly submit the invoice in my ILMS.

See below instructions.
The Embassy is pleased to inform you that we recently rolled out an online based Invoicing platform that amongst other things enables you to;

- Submit your Invoice online.
- Track Realtime the status & progress of your Invoice.
- Get updates upon final approval.
- View all orders currently awarded to your company.

To access the system:

1. Create a user account using the following link, https://mygrants.servicenowservices.com/ and click on create an account.
2. Download the Okta Authenticator app to your smartphone. You will need this app to access my ILMS portal. The app is free to download.

Kindly create your online account it's the only way we are accepting Invoices moving forward.

Payment shall be made in local currency by Electronic Funds Transfer (EFT) within 30 days after receipt of the proper invoice

The Government will not reimburse the Contractor for Value Added Tax (VAT) under this contract. See Section A2.

SECTION G - SPECIAL TERMS AND CONDITIONS

G.1.0 PERFORMANCE/PAYMENT PROTECTION - The Contractor shall furnish some form of payment protection as described in 52.228-13 in the amount of 50% of the contract price.

G.1.1 The Contractor shall provide the information required by the paragraph above within ten (10) calendar days after award. Failure to timely submit the required security may result in rescinding or termination of the contract by the Government. If the contract is terminated, the Contractor will be liable for those costs as described in FAR 52.249-10, Default (Fixed-Price Construction), which is included in this purchase order.

G.1.2 The bonds or alternate performance security shall guarantee the Contractor's execution and completion of the work within the contract time. This security shall also guarantee the correction of any defects after completion, the payment of all wages and other amounts payable by the Contractor under its subcontracts or for labor and materials, and the satisfaction or removal of any liens or encumbrances placed on the work.

G.1.3 The required securities shall remain in effect in the full amount required until final acceptance of the project by the Government. Upon final acceptance, the penal sum of the performance security shall be reduced to 10% of the contract price. The security shall remain in effect for one year after the date of final completion and acceptance, and the Contractor shall pay any premium required for the entire period of coverage.

G.2.0 INSURANCE - The Contractor is required by FAR 52.228-5, "Insurance - Work on a Government Installation" to provide whatever insurance is legally necessary. The Contractor shall at its own expense provide and maintain during the entire performance period the following insurance amounts:

G.2.1 GENERAL LIABILITY (includes premises/operations, collapse hazard, products, completed operations, contractual, independent contractors, broad form property damage, personal injury):

(1) BODILY INJURY, ON OR OFF THE SITE, IN U.S. DOLLARS	
Per Occurrence	**Per Industry Standard**
Cumulative	**Per Industry Standard**
(2) PROPERTY DAMAGE, ON OR OFF THE SITE, IN U.S. DOLLARS	
Per Occurrence	**Per Industry Standard**
Cumulative	**Per Industry Standard**

G.2.2 The foregoing types and amounts of insurance are the minimums required. The Contractor shall obtain any other types of insurance required by local law or that are ordinarily or customarily obtained in the location of the work. The limit of such insurance shall be as provided by law or sufficient to meet normal and customary claims.

G.2.3 The Contractor agrees that the Government shall not be responsible for personal injuries or for damages to any property of the Contractor, its officers, agents, servants, and employees, or any other person, arising from and incident to the Contractor's performance of this contract. The Contractor shall hold harmless and indemnify the Government from any and all claims arising therefrom, except in the instance of gross negligence on the part of the Government.

G.2.4 The Contractor shall obtain adequate insurance for damage to, or theft of, materials and equipment in insurance coverage for loose transit to the site or in storage on or off the site.

G.2.5 The general liability policy required of the Contractor shall name "the United States of America, acting by and through the Department of State", as an additional insured with respect to operations performed under this contract.

G.3.0 DOCUMENT DESCRIPTIONS

G.3.1 SUPPLEMENTAL DOCUMENTS: The Contracting Officer shall furnish from time to time such detailed drawings and other information as is considered necessary, in the opinion of the Contracting Officer, to interpret, clarify, supplement, or correct inconsistencies, errors or omissions in the Contract documents, or to describe minor changes in the work not involving an increase in the contract price or extension of the contract time. The Contractor shall comply with the requirements of the supplemental documents, and unless prompt objection is made by the Contractor within 20 days, their issuance shall not provide for any claim for an increase in the Contract price or an extension of contract time.

G.3.1.1. RECORD DOCUMENTS. The Contractor shall maintain at the project site:

(1) a current marked set of Contract drawings and specifications indicating all interpretations and clarification, contract modifications, change orders, or any other departure from the contract requirements approved by the Contracting Officer; and,

(2) a complete set of record shop drawings, product data, samples and other submittals as approved by the Contracting Officer.

G.3.1.2. "As-Built" Documents: After final completion of the work, but before final acceptance thereof, the Contractor shall provide:

(1) a complete set of "as-built" drawings, based upon the record set of drawings, marked to show the details of construction as actually accomplished; and,

(2) record shop drawings and other submittals, in the number and form as required by the specifications.

G.4.0 LAWS AND REGULATIONS - The Contractor shall, without additional expense to the Government, be responsible for complying with all laws, codes, ordinances, and regulations applicable to the performance of the work, including those of the host country, and with the

lawful orders of any governmental authority having jurisdiction. Host country authorities may not enter the construction site without the permission of the Contracting Officer. Unless otherwise directed by the Contracting Officer, the Contractor shall comply with the more stringent of the requirements of such laws, regulations, and orders and of the contract. In the event of a conflict between the contract and such laws, regulations and orders, the Contractor shall promptly advise the Contracting Officer of the conflict and of the Contractor's proposed course of action for resolution by the Contracting Officer.

G.4.1 The Contractor shall comply with all local labor laws, regulations, customs, and practices pertaining to labor, safety, and similar matters, to the extent that such compliance is not inconsistent with the requirements of this contract.

G.4.2 The Contractor shall give written assurance to the Contracting Officer that all subcontractors and others performing work on or for the project have obtained all requisite licenses and permits.

G.4.3 The Contractor shall submit proper documentation and evidence satisfactory to the Contracting Officer of compliance with this clause.

G.5.0 CONSTRUCTION PERSONNEL - The Contractor shall maintain discipline at the site and at all times take all reasonable precautions to prevent any unlawful, riotous, or disorderly conduct by or among those employed at the site. The Contractor shall ensure the preservation of peace and protection of persons and property in the neighborhood of the project against such action. The Contracting Officer may require, in writing that the Contractor remove from the work any employee that the Contracting Officer deems incompetent, careless, insubordinate or otherwise objectionable, or whose continued employment on the project is deemed by the Contracting Officer to be contrary to the Government's interests.

G.5.1 If the Contractor has knowledge that any actual or potential labor dispute is delaying or threatens to delay the timely performance of this contract, the Contractor shall immediately give notice, including all relevant information, to the Contracting Officer.

G.5.2 After award, the Contractor has ten calendar days to submit to the Contracting Officer a list of workers and supervisors assigned to this project for the Government to conduct all necessary security checks. It is anticipated that security checks will take 10 days to perform. For each individual, the list shall include:

Full Name
Place and Date of Birth
Current Address
Identification number

Failure to provide any of the above information may be considered grounds for rejection and/or resubmittal of the application. Once the Government has completed the security screening and approved the applicants a badge will be provided to the individual for access to the site. This

badge may be revoked at any time due to the falsification of data, or misconduct on site.

G.5.3 The Contractor shall provide an English speaking supervisor on site at all times. This position is considered as key personnel under this purchase order.

G.6.0 Materials and Equipment - All materials and equipment incorporated into the work shall be new and for the purpose intended, unless otherwise specified. All workmanship shall be of good quality and performed in a skillful manner that will withstand inspection by the Contracting Officer.

G.7.0 SPECIAL WARRANTIES

G.7.1 Any special warranties that may be required under the contract shall be subject to the stipulations set forth in 52.246-21, "Warranty of Construction", as long as they are not in conflict.

G.7.2 The Contractor shall obtain and furnish to the Government all information required to make any subcontractor's, manufacturer's, or supplier's guarantee or warranty legally binding and effective. The Contractor shall submit both the information and the guarantee or warranty to the Government in sufficient time to permit the Government to meet any time limit specified in the guarantee or warranty, but not later than completion and acceptance of all work under this contract.

G.8.0 EQUITABLE ADJUSTMENTS

Any circumstance for which the contract provides an equitable adjustment that causes a change within the meaning of paragraph (a) of the "Changes" clause shall be treated as a change under that clause; provided, that the Contractor gives the Contracting Officer prompt written notice (within 20 days) stating:

(a) the date, circumstances, and applicable contract clause authorizing an equitable adjustment and

(b) that the Contractor regards the event as a changed condition for which an equitable adjustment is allowed under the contract

The Contractor shall provide written notice of a differing site condition within 5 calendar days of occurrence following FAR 52.236-2, Differing Site Conditions.

G.9.0 ZONING APPROVALS AND PERMITS

The Government shall be responsible for:

- obtaining proper zoning or other land use control approval for the project

- obtaining the approval of the Contracting Drawings and Specifications
- paying fees due for the foregoing; and,
- for obtaining and paying for the initial building permits.

SECTION H - CLAUSES

52.252-2 CLAUSES INCORPORATED BY REFERENCE (FEB 1998)

This contract incorporates one or more clauses by reference, with the same force and effect as if they were given in full text. Upon request, the Contracting Officer will make their full text available. In addition, the full text of a clause may be accessed electronically at: Acquisition.gov this address is subject to change.

If the Federal Acquisition Regulation (FAR) is not available at the location indicated above, use the Department of State Acquisition website at e-CFR to see the links to the FAR. You may also use an Internet "search engine" (for example, Google, Yahoo or Excite) to obtain the latest location of the most current FAR.

THE FOLLOWING FEDERAL ACQUISITION REGULATION CLAUSE(S) IS/ARE INCORPORATED BY REFERENCE (48 CFR CH. 1):

CLAUSE	TITLE AND DATE
52.202-1	DEFINITIONS (JUN 2020)
52.203-17	CONTRACTOR EMPLOYEE WHISTLEBLOWER RIGHTS (NOV 2023)
52.204-9	PERSONAL IDENTITY VERIFICATION OF CONTRACTOR PERSONNEL (JAN 2011)
52.204-10	REPORTING EXECUTIVE COMPENSATION AND FIRST-TIER SUBCONTRACT AWARDS (JUN 2020)
52.204-13	SYSTEM FOR AWARD MANAGEMENT MAINTENANCE (OCT 2018)
52.204-18	COMMERCIAL AND GOVERNMENT ENTITY CODE MAINTENANCE (AUG 2020)
52.204-19	INCORPORATION BY REFERENCE OF REPRESENTATIONS AND CERTIFICATIONS (DEC 2014)
52.204-27	PROHIBITION ON A BYTEDANCE COVERED APPLICATION (JUN 2023)
52.209-6	PROTECTING THE GOVERNMENT'S INTEREST WHEN SUBCONTRACTING WITH CONTRACTORS DEBARRED, SUSPENDED OR PROPOSED FOR DEBARMENT OR VOLUNTARILY EXCLUDED (JAN 2025)
52.216-7	ALLOWABLE COST AND PAYMENT (AUG 2018)

52.222-1 NOTICE TO THE GOVERNMENT OF LABOR DISPUTES (FEB 1997)

52.222-19 CHILD LABOR-COOPERATION WITH AUTHORITIES AND REMEDIES (JAN 2025)

52.222-50 COMBATING TRAFFICKING IN PERSONS (NOV 2021)

52.225-5 TRADE AGREEMENTS (NOV 2023)

52.225-13 RESTRICTIONS ON CERTAIN FOREIGN PURCHASES (FEB 2021)

52.225-14 INCONSISTENCY BETWEEN ENGLISH VERSION AND TRANSLATION OF CONTRACT (FEB 2000)

52.226-8 ENCOURAGING CONTRACTOR POLICIES TO BAN TEXT MESSAGING WHILE DRIVING (MAY 2024)

52.228-3 WORKERS' COMPENSATION INSURANCE (DEFENSE BASE ACT) (JUL 2014)

52.228-4 WORKERS' COMPENSATION AND WAR-HAZARD INSURANCE OVERSEAS (APR 1984)

52.228-5 INSURANCE - WORK ON A GOVERNMENT INSTALLATION (JAN 1997)

52.228-11 PLEDGES OF ASSETS (FEB 2021)

52.228-13 ALTERNATIVE PAYMENT PROTECTION (JULY 2000)

52.228-14 IRREVOCABLE LETTER OF CREDIT (NOV 2014)

52.228-15 PERFORMANCE AND PAYMENT BONDS-CONSTRUCTION (JUN 2020)

52.229-6 TAXES - FOREIGN FIXED-PRICE CONTRACTS (FEB 2013)

52.229-7 TAXES- FIXED PRICE CONTRACTS WITH FOREIGN GOVERNMENTS (FEB 2013)

52.232-5 PAYMENTS UNDER FIXED-PRICE CONSTRUCTION CONTRACTS (MAY 2014)

52.232-8 DISCOUNTS FOR PROMPT PAYMENT (FEB 2002)

52.232-11 EXTRAS (APR 1984)

52.232-18 AVAILABILITY OF FUNDS (APR 1984)

52.232-22 LIMITATION OF FUNDS (APR 1984)

52.232-25 PROMPT PAYMENT (JAN 2017)

52.232-27 PROMPT PAYMENT FOR CONSTRUCTION CONTRACTS (JAN 2017)

52.232-33 PAYMENT BY ELECTRONIC FUNDS TRANSFER - SYSTEM FOR AWARD MANAGEMENT (OCT 2018)

52.232-34 PAYMENT BY ELECTRONIC FUNDS TRANSFER – OTHER THAN SYSTEM FOR AWARD MANAGEMENT (JULY 2013)

52.233-1 DISPUTES (MAY 2014) ALTERNATE I (DEC 1991)

52.233-3 PROTEST AFTER AWARD (AUG 1996)

52.236-2 DIFFERING SITE CONDITIONS (APR 1984)

52.236-3 SITE INVESTIGATION AND CONDITIONS AFFECTING THE WORK (APR 1984)

52.236-5 MATERIAL AND WORKMANSHIP (APR 1984)

52.236-6 SUPERINTENDENCE BY THE CONTRACTOR (APR 1984)

52.236-7 PERMITS AND RESPONSIBILITIES (NOV 1991)

52.236-8 OTHER CONTRACTS (APR 1984)

52.236-9 PROTECTION OF EXISTING VEGETATION, STRUCTURES, EQUIPMENT, UTILITIES, AND IMPROVEMENTS (APR 1984)

52.236-10 OPERATIONS AND STORAGE AREAS (APR 1984)

52.236-11 USE AND POSSESSION PRIOR TO COMPLETION (APR 1984)

52.236-12 CLEANING UP (APR 1984)

52.236-13 ACCIDENT PREVENTION (NOV 1991)

52.236-14 AVAILABILITY AND USE OF UTILITY SERVICES (APR 1984)

52.236-15 SCHEDULES FOR CONSTRUCTION CONTRACTS (APR 1984)

52.236-21 SPECIFICATIONS AND DRAWINGS FOR CONSTRUCTION (FEB 1997)

52.236-26 PRECONSTRUCTION CONFERENCE (FEB 1995)

52.242-14 SUSPENSION OF WORK (APR 1984)

52.243-4 CHANGES (JUN 2007)

52.243-5 CHANGES AND CHANGED CONDITIONS (APR 1984)

52.245-2 GOVERNMENT PROPERTY INSTALLATION OPERATION SERVICES (APR 2012)

52.245-9 USE AND CHARGES (APR 2012)

52.246-12 INSPECTION OF CONSTRUCTION (AUG 1996)

52.246-17 WARRANTY OF SUPPLIES OF A NONCOMPLEX NATURE (JUN 2003)

52.246-21 WARRANTY OF CONSTRUCTION (MAR 1994)

52.246-26 REPORTING NONCONFORMING ITEMS (AUG 2024)

52.249-2 TERMINATION FOR CONVENIENCE OF THE GOVERNMENT (FIXED-PRICE) (APR 2012)

52.249-10 DEFAULT (FIXED-PRICE CONSTRUCTION) (APR 1984)

52.249-14 EXCUSABLE DELAYS (APR 1984)

I. FAR CLAUSES INCORPORATED IN FULL TEXT

52.204-25 PROHIBITION ON CONTRACTING FOR CERTAIN TELECOMMUNICATIONS AND VIDEO SURVEILLANCE SERVICES OR EQUIPMENT (NOV 2021)

(a) *Definitions.* As used in this clause—

Backhaul means intermediate links between the core network, or backbone network, and the small subnetworks at the edge of the network (*e.g.*, connecting cell phones/towers to the core telephone network). Backhaul can be wireless (e.g., microwave) or wired (*e.g.*, fiber optic, coaxial cable, Ethernet).

Covered foreign country means The People's Republic of China.

Covered telecommunications equipment or services means–

(1) Telecommunications equipment produced by Huawei Technologies Company or ZTE Corporation (or any subsidiary or affiliate of such entities);

(2) For the purpose of public safety, security of Government facilities, physical security surveillance of critical infrastructure, and other national security purposes, video surveillance and telecommunications equipment produced by Hytera Communications Corporation, Hangzhou Hikvision Digital Technology Company, or Dahua Technology Company (or any subsidiary or affiliate of such entities);

(3) Telecommunications or video surveillance services provided by such entities or using such equipment; or

(4) Telecommunications or video surveillance equipment or services produced or provided by an entity that the Secretary of Defense, in consultation with the Director of National Intelligence or the Director of the Federal Bureau of Investigation, reasonably believes to be an entity owned or controlled by, or otherwise connected to, the government of a covered foreign country.

Critical technology means–

(1) Defense articles or defense services included on the United States Munitions List set forth in the International Traffic in Arms Regulations under subchapter M of chapter I of title 22, Code of Federal Regulations;

(2) Items included on the Commerce Control List set forth in Supplement No. 1 to part 774 of the Export Administration Regulations under subchapter C of chapter VII of title 15, Code of Federal Regulations, and controlled-

(i) Pursuant to multilateral regimes, including for reasons relating to national security, chemical and biological weapons proliferation, nuclear nonproliferation, or missile technology; or

(ii) For reasons relating to regional stability or surreptitious listening;

(3) Specially designed and prepared nuclear equipment, parts and components, materials, software, and technology covered by part 810 of title 10, Code of Federal Regulations (relating to assistance to foreign atomic energy activities);

(4) Nuclear facilities, equipment, and material covered by part 110 of title 10, Code of Federal Regulations (relating to export and import of nuclear equipment and material);

(5) Select agents and toxins covered by part 331 of title 7, Code of Federal Regulations, part 121 of title 9 of such Code, or part 73 of title 42 of such Code; or

(6) Emerging and foundational technologies controlled pursuant to section 1758 of the Export Control Reform Act of 2018 (50 U.S.C. 4817).

Interconnection arrangements means arrangements governing the physical connection of two or more networks to allow the use of another's network to hand off traffic where it is ultimately delivered (*e.g.*, connection of a customer of telephone provider A to a customer of telephone company B) or sharing data and other information resources.

Reasonable inquiry means an inquiry designed to uncover any information in the entity's possession about the identity of the producer or provider of covered telecommunications equipment or services used by the entity that excludes the need to include an internal or third-party audit.

Roaming means cellular communications services (*e.g.*, voice, video, data) received from a visited network when unable to connect to the facilities of the home network either because signal coverage is too weak or because traffic is too high.

Substantial or essential component means any component necessary for the proper function or performance of a piece of equipment, system, or service.

(b) *Prohibition*.

(1) Section 889(a)(1)(A) of the John S. McCain National Defense Authorization Act for Fiscal Year 2019 (Pub. L. 115-232) prohibits the head of an executive agency on or after August 13, 2019, from procuring or obtaining, or extending or renewing a contract to procure or obtain, any equipment, system, or service that uses covered telecommunications equipment or services as a substantial or essential component of any system, or as critical technology as part of any system. The Contractor is prohibited from providing to the Government any equipment, system, or service that uses covered telecommunications equipment or services as a substantial or essential component of any system, or as critical technology as part of any system, unless an exception at paragraph (c) of this clause applies or the covered telecommunication equipment or services are covered by a waiver described in FAR 4.2104.

(2) Section 889(a)(1)(B) of the John S. McCain National Defense Authorization Act for Fiscal Year 2019 (Pub. L. 115-232) prohibits the head of an executive agency on or after August 13, 2020, from entering into a contract, or extending or renewing a contract, with an entity that uses any equipment, system, or service that uses covered telecommunications equipment or services as a substantial or essential component of any system, or as critical technology as part of any system, unless an exception at paragraph (c) of this clause applies or the covered telecommunication equipment or services are covered by a waiver described in FAR 4.2104. This prohibition applies to the use of covered telecommunications equipment or services, regardless of whether that use is in performance of work under a Federal contract.

(c) *Exceptions.* This clause does not prohibit contractors from providing—

(1) A service that connects to the facilities of a third-party, such as backhaul, roaming, or interconnection arrangements; or

(2) Telecommunications equipment that cannot route or redirect user data traffic or permit visibility into any user data or packets that such equipment transmits or otherwise handles.

(d) Reporting requirement.

(1) In the event the Contractor identifies covered telecommunications equipment or services used as a substantial or essential component of any system, or as critical technology as part of any system, during contract performance, or the Contractor is notified of such by a subcontractor at any tier or by any other source, the Contractor shall report the information in paragraph (d)(2) of this clause to the Contracting Officer, unless elsewhere in this contract are established procedures for reporting the information; in the case of the Department of Defense, the Contractor shall report to the website at https://dibnet.dod.mil. For indefinite delivery contracts, the Contractor shall report to the Contracting Officer for the indefinite delivery contract and the Contracting Officer(s) for any affected order or, in the case of the Department of Defense, identify both the indefinite delivery contract and any affected orders in the report provided at https://dibnet.dod.mil.

(2) The Contractor shall report the following information pursuant to paragraph (d)(1) of this clause

(i) Within one business day from the date of such identification or notification: the contract number; the order number(s), if applicable; supplier name; supplier unique entity identifier (if known); supplier Commercial and Government Entity (CAGE) code (if known);

brand; model number (original equipment manufacturer number, manufacturer part number, or wholesaler number); item description; and any readily available information about mitigation actions undertaken or recommended.

(ii) Within 10 business days of submitting the information in paragraph (d)(2)(i) of this clause: any further available information about mitigation actions undertaken or recommended. In addition, the Contractor shall describe the efforts it undertook to prevent use or submission of covered telecommunications equipment or services, and any additional efforts that will be incorporated to prevent future use or submission of covered telecommunications equipment or services.

(e) *Subcontracts.* The Contractor shall insert the substance of this clause, including this paragraph (e) and excluding paragraph (b)(2), in all subcontracts and other contractual instruments, including subcontracts for the acquisition of commercial products or commercial services.

(End of clause)

52.204-90 Offeror Identification.

As prescribed in 4.208(c)(1), insert the following provision:

Offeror Identification (Deviation Date)

If the Offeror will not have an active Federal Government contracts registration in the System for Award Management (https://www.sam.gov) when submitting its offer, it shall complete paragraphs (c) and (d) of this provision and include its responses with its offer.

(a) *Definitions*. As used in this provision—

Commercial and Government Entity (CAGE) code has the meaning provided in the clause at FAR 52.204-91, Contractor Identification, of this solicitation.

Common parent means that corporate entity that owns or controls an affiliated group of corporations that files its Federal income tax returns on a consolidated basis, and of which the offeror is a member.

Electronic Funds Transfer (EFT) indicator means a bank account identifier to establish additional System for Award Management records for identifying alternative EFT accounts (see part 32) for the same entity.

Highest-level owner means the entity that owns or controls an immediate owner of the offeror, or that owns or controls one or more entities that control an immediate owner of the offeror. No entity owns or exercises control of the highest-level owner.

Immediate owner means an entity, other than the offeror, that has direct control of the offeror. Indicators of control include, but are not limited to, one or more of the following: ownership or interlocking management, identity of interests among family members, shared facilities and

equipment, and the common use of employees. There may be more than one immediate owner (e.g., joint ventures).

Predecessor means an entity whose assets were acquired by the offeror or another entity (most often through merger or acquisition) and whose affairs are now carried out by the offeror or the other entity under a new name.

Taxpayer Identification Number means the number required by the Internal Revenue Service (IRS) to be used by the offeror to report income tax and other returns. It may be either a Social Security Number or an Employer Identification Number.

Unique entity identifier (UEI) has the meaning provided in the clause at FAR 52.204-91, Contractor Identification, of this solicitation.

(b) *Unique entity identifier (UEI).*

(1) The Offeror shall enter, in the block with its name and address on the cover page of its offer, the annotation "Unique Entity Identifier" followed by the UEI that identifies the Offeror's name and address exactly as stated in the offer. The Offeror shall also enter its EFT indicator, if applicable.

(2) If the Offeror does not have a UEI, it shall go to https://www.sam.gov to obtain one. The Government will independently validate the existence and uniqueness of the Offeror before assigning a UEI.

(c) *Taxpayer identification*. The Offeror shall provide with its offer the following information that is necessary to comply with debt collection requirements of 31 U.S.C. 7701(c) and 3325(d); reporting requirements of 26 U.S.C. 6041, 6041A, and 6050M; and the implementing IRS regulations:

(1) Taxpayer identification number (TIN)

□ TIN: _____;

□ TIN has been applied for; or

□ TIN is not required because:

□ Offeror is a nonresident alien, foreign corporation, or foreign partnership that does not have income effectively connected with the conduct of a trade or business in the United States and does not have an office or place of business or a fiscal paying agent in the United States;

□ Offeror is an agency or instrumentality of a foreign government; or

□ Offeror is an agency or instrumentality of the Federal Government.

(2) *Type of organization.*

□ Sole proprietorship;

□ Partnership;

□ Corporate entity (not tax-exempt);

□ Corporate entity (tax-exempt);

□ Government entity (Federal, State, or local);

□ Foreign government;

□ International organization per 26 CFR 1.6049-4; or

□ Other.

(3) *Common parent.*

□ Offeror is not owned or controlled by a common parent as defined in paragraph (a) of this provision; or

□ Name and TIN of common parent:

Name: _____

TIN: _____

(4) The TIN provided in paragraph (c)(1) of this provision may be matched with IRS records to verify the accuracy of the Offeror's TIN. The Government may use the TIN to collect and report on any delinquent amounts arising out of the Offeror's relationship with the Government (31 U.S.C. 7701(c)(3)).

(d) Commercial and Government Entity (CAGE) code.

(1) The Offeror shall provide its CAGE code with its offer with its name and location address or otherwise include it prominently in its offer. The CAGE code shall be for that name and location address. Insert the word "CAGE" before the code. The Offeror may obtain a CAGE code as indicated in the following table.

If the Offeror is…	**Then…**
Located in the United States or its outlying areas	Submit a request to the DLA CAGE Branch via https://cage.dla.mil
Located outside the United States and its outlying areas and its country is a member of the North Atlantic	Contact the appropriate National Codification Bureau (https://www.nato.int/structur/ac/135/about/contacts)

Treaty Organization (NATO) or a sponsored nation	
Located outside the United States and its outlying areas and its country is not a member of NATO or a sponsored nation	Contact the NATO Support and Procurement Agency (NSPA) (https://eportal.nspa.nato.int/AC135Public/scage/CageList.aspx)

(2) The Offeror shall provide the CAGE code and legal business name (Do not use a "doing business as" name) for—

(i) Its immediate owner(s), if any;

(ii) Its highest-level owner, if any; and

(iii) Any predecessor(s), or predecessor of an Offeror's predecessor, that held a Federal contract or grant within the last three years.

Owner Type	**CAGE Code**	**Legal Business Name**
Immediate owner		
Highest-level owner		
Predecessor*		

* Predecessor CAGE code may be marked "Unknown."

(3) If the Offeror has more than one immediate owner (such as a joint venture), give the information for each owner (or joint venture participant). If the Offeror has more than one predecessor, provide information for each predecessor in reverse chronological order.

(End of provision)

52.213-4 TERMS AND CONDITIONS—SIMPLIFIED ACQUISITIONS (OTHER THAN COMMERCIAL PRODUCTS AND COMMERCIAL SERVICES) (JAN 2025)

(a) The Contractor shall comply with the following Federal Acquisition Regulation (FAR) clauses that are incorporated by reference:

(1) The clauses listed below implement provisions of law or Executive order:

(i) 52.203-19, Prohibition on Requiring Certain Internal Confidentiality Agreements or Statements (Jan 2017) (section 743 of Division E, Title VII, of the Consolidated and Further Continuing Appropriations Act, 2015 (Pub. L. 113-235) and its successor provisions in subsequent appropriations acts (and as extended in continuing resolutions)).

(ii) 52.204-23, Prohibition on Contracting for Hardware, Software, and Services Developed or Provided by Kaspersky Lab Covered Entities (Dec 2023) (Section 1634 of Pub. L. 115-91).

(iii) 52.204-25, Prohibition on Contracting for Certain Telecommunications and Video Surveillance Services or Equipment. (Nov 2021) (Section 889(a)(1)(A) of Pub. L. 115-232).

(iv) 52.204-27, Prohibition on a ByteDance Covered Application (Jun 2023) (Section 102 of Division R of Pub. L. 117-328), unless the agency grants an exception - see paragraph (b) of 52.204-27.

(v) 52.204-30, Federal Acquisition Supply Chain Security Act Orders—Prohibition. (Dec 2023) (Pub. L. 115–390, title II).

(vi) 52.222-3, Convict Labor (Jun 2003) (E.O.11755).

(vii) 52.222-21, Prohibition of Segregated Facilities (Apr 2015).

(viii) 52.222-26, Equal Opportunity (Sep 2016) (E.O.11246).

(ix) 52.225-13, Restrictions on Certain Foreign Purchases (Feb 2021) (E.O.s, proclamations, and statutes administered by the Office of Foreign Assets Control of the Department of the Treasury).

(x) 52.232-40, Providing Accelerated Payments to Small Business Subcontractors (Mar 2023) (31 U.S.C. 3903 and 10 U.S.C. 3801).

(xi) 52.233-3, Protest After Award (Aug 1996) (31 U.S.C. 3553).

(xii) 52.233-4, Applicable Law for Breach of Contract Claim (Oct 2004) (Pub. L. 108-77 and 108-78 (19 U.S.C. 3805 note)).

(2) Listed below are additional clauses that apply:

(i) 52.232-1, Payments (Apr 1984).

(ii) 52.232-8, Discounts for Prompt Payment (Feb 2002).

(iii) 52.232-11, Extras (Apr 1984).

(iv) 52.232-25, Prompt Payment (Jan 2017).

(v) 52.232-39, Unenforceability of Unauthorized Obligations (Jun 2013).

(vi) 52.233-1, Disputes (May 2014).

(vii) 52.244-6, Subcontracts for Commercial Products and Commercial Services (Jan 2025).

(viii) 52.253-1, Computer Generated Forms (Jan 1991).

(b) The Contractor shall comply with the following FAR clauses, incorporated by reference, unless the circumstances do not apply:

(1) The clauses listed below implement provisions of law or Executive order:

(i) 52.203-17, Contractor Employee Whistleblower Rights (Nov 2023) (41 U.S.C. 4712); this clause does not apply to contracts of DoD, NASA, the Coast Guard, or applicable elements of the intelligence community—see FAR 3.900(a).

(ii) 52.204-10, Reporting Executive Compensation and First-Tier Subcontract Awards (Jun 2020)(Pub. L. 109-282) (31 U.S.C. 6101 note) (Applies to contracts valued at or above the threshold specified in FAR 4.1403(a) on the date of award of this contract).

(iii) 52.222-19, Child Labor—Cooperation with Authorities and Remedies (Jan 2025) (E.O. 13126) (Applies to contracts for supplies exceeding the micro-purchase threshold, as defined in 2.101 on the date of award of this contract).

(iv) 52.222-20, Contracts for Materials, Supplies, Articles, and Equipment., Contracts for Materials, Supplies, Articles, and Equipment (Jun 2020) (41 U.S.C. chapter 65) (Applies to supply contracts over the threshold specified in FAR 22.602 on the date of award of this contract, in the United States, Puerto Rico, or the U.S. Virgin Islands).

(v) 52.222-35, Equal Opportunity for Veterans (Jun 2020) (38 U.S.C. 4212) (Applies to contracts valued at or above the threshold specified in FAR 22.1303(a) on the date of award of this contract).

(vi) 52.222-36, Equal Employment for Workers with Disabilities (Jun 2020) (29 U.S.C. 793) (Applies to contracts over the threshold specified in FAR 22.1408(a) on the date of award of this contract, unless the work is to be performed outside the United States by employees recruited outside the United States). (For purposes of this clause, "United States" includes the 50 States, the District of Columbia, Puerto Rico, the Northern Mariana Islands, American Samoa, Guam, the U.S. Virgin Islands, and Wake Island.)

(vii) 52.222-37, Employment Reports on Veterans (Jun 2020) (38 U.S.C. 4212) (Applies to contracts valued at or above the threshold specified in FAR 22.1303(a) on the date of award of this contract).

(viii) 52.222-41, Service Contract Labor Standards (Aug 2018) (41 U.S.C. chapter 67) (Applies to service contracts over $2,500 that are subject to the Service Contract Labor Standards statute and will be performed in the United States, District of Columbia, Puerto Rico, the Northern Mariana Islands, American Samoa, Guam, the U.S. Virgin Islands, Johnston Island, Wake Island, or the outer Continental Shelf).

(ix)

(A) 52.222-50, Combating Trafficking in Persons (Nov 2021) (22 U.S.C. chapter 78 and E.O. 13627) (Applies to all solicitations and contracts).

(B) Alternate I (Mar 2015) (Applies if the Contracting Officer has filled in the following information with regard to applicable directives or notices: Document title(s), source for obtaining document(s), and contract performance location outside the United States to which the document applies).

(x) 52.222-55, Minimum Wages for Contractor Workers Under Executive Order 14026 (Jan 2022) (Applies when 52.222-6 or 52.222-41 are in the contract and performance in whole or in part is in the United States (the 50 States, the District of Columbia, Puerto Rico, the Northern Mariana Islands, American Samoa, Guam, the U.S. Virgin Islands, Johnston Island, Wake Island, and the outer Continental Shelf as defined in the Outer Continental Shelf Lands Act (43 U.S.C. 1331, *et seq.*))).

(xi) 52.222-62, Paid Sick Leave Under Executive Order 13706 (Jan 2022) (E.O. 13706) (Applies when 52.222-6 or 52.222-41 are in the contract and performance in whole or in part is in the United States (the 50 States and the District of Columbia.))

(xii) 52.223-5, Pollution Prevention and Right-to-Know Information (May 2024) (42 U.S.C. 11001-11050 and 13101-13109) (Applies to services performed on Federal facilities).

(xiii) 52.223-11, Ozone-Depleting Substances and High Global Warming Potential Hydrofluorocarbons (May 2024) (42 U.S.C. 7671, *et seq.*) (Applies to contracts for products as prescribed at FAR 23.109(d)(1)).

(xiv) 52.223-12, Maintenance, Service, Repair, or Disposal of Refrigeration Equipment and Air Conditioners (May 2024) (42 U.S.C. 7671, *et seq.*) (Applies to maintenance, service, repair, or disposal of refrigeration equipment and air conditioners).

(xv) 52.223-20, Aerosols (May 2024) (42 U.S.C. 7671, *et seq.*) (Applies to contracts for products that may contain high global warming potential hydrofluorocarbons as a propellant or as a solvent; or contracts for maintenance or repair of electronic or mechanical devices).

(xvi) 52.223-21, Foams (May 2024) (42 U.S.C. 7671, *et seq.*) (Applies to contracts for products that may contain high global warming potential hydrofluorocarbons or refrigerant blends containing hydrofluorocarbons as a foam blowing agent; or contracts for construction of buildings or facilities.

(xvii) 52.223-23, Sustainable Products and Services (May 2024) (E.O. 14057, 7 U.S.C. 8102, 42 U.S.C. 6962, 42 U.S.C. 8259b, and 42 U.S.C. 7671l) (Applies to contracts when the agency identifies in the statement of work, or elsewhere in the contract, the sustainable products and services that apply to the acquisition).

(xviii)

(A) 52.225-1, Buy American-Supplies (Oct 2022) (41 U.S.C. chapter 67) (Applies to contracts for supplies, and to contracts for services involving the furnishing of supplies, for use in the United States or its outlying areas, if the value of the supply contract or supply portion of a service contract exceeds the micro-purchase threshold, as defined in 2.101 on the date of award of this contract, and the acquisition-

(1) Is set aside for small business concerns; or

(2) Cannot be set aside for small business concerns (see 19.502-2), and does not exceed $50,000).

(B) *Alternate I* (OCT 2022) (Applies if the Contracting Officer has filled in the domestic content threshold below, which will apply to the entire contract period of performance. Substitute the following sentence for the first sentence of paragraph (1)(ii)(A) of the definition of *domestic end product* in paragraph (a) of 52.225-1: (A) The cost of its components mined, produced, or manufactured in the United States exceeds ____ percent of the cost of all its components. [*Contracting officer to insert the percentage per instructions at 13.302-5(d)(4).*])

(xix) 52.226-6, Promoting Excess Food Donation to Nonprofit Organizations., Promoting Excess Food Donation to Nonprofit Organizations (Jun 2020) (42 U.S.C. 1792) (Applies to contracts greater than the threshold specified in FAR 26.404 on the date of award of this contract, that provide for the provision, the service, or the sale of food in the United States).

(xx) 52.232-33, Payment by Electronic Funds Transfer-System for Award Management (Oct 2013)(Applies when the payment will be made by electronic funds transfer (EFT) and the payment office uses the System for Award Management (SAM) as its source of EFT information).

(xxi) 52.232-34, Payment by Electronic Funds Transfer-Other than System for Award Management (Jul 2013) (Applies when the payment will be made by EFT and the payment office does not use the SAM database as its source of EFT information).

(xxii) 52.240-1, Prohibition on Unmanned Aircraft Systems Manufactured or Assembled by American Security Drone Act-Covered Foreign Entities (Nov 2024) (Sections 1821-1826, Pub. L. 118-31, 41 U.S.C. 3901 note prec.).

(xxiii) 52.247-64, Preference for Privately Owned U.S.-Flag Commercial Vessels (Nov 2021) (46 U.S.C. 55305)(Applies to supplies transported by ocean vessels (except for the types of subcontracts listed at 47.504(d)).

(xxiv) 52.247-69, Reporting Requirement for U.S.-Flag Air Carriers Regarding Training to Prevent Human Trafficking (Jan 2025) (49 U.S.C. 40118(g)). (Applies to contracts with a U.S.-flag carrier for the transportation by air of passengers; does not apply to contracts awarded by the Department of Defense or contracts for commercial products).

(2) Listed below are additional clauses that may apply:

(i) 52.204-21, Basic Safeguarding of Covered Contractor Information Systems (Nov 2021) (Applies to contracts when the contractor or a subcontractor at any tier may have Federal contract information residing in or transiting through its information system.)

(ii) 52.209-6, Protecting the Government's Interest When Subcontracting with Contractors Debarred, Suspended, Proposed for Debarment, or Voluntarily Excluded (Jan 2025) (Applies to contracts over the threshold specified in FAR 9.405-2(b) on the date of award of this contract).

(iii) 52.211-17, Delivery of Excess Quantities (Sept 1989) (Applies to fixed-price supplies).

(iv) 52.247-29, F.o.b. Origin (Feb 2006) (Applies to supplies if delivery is f.o.b. origin).

(v) 52.247-34, F.o.b. Destination (Jan 1991) (Applies to supplies if delivery is f.o.b. destination).

(c) *FAR 52.252-2, Clauses Incorporated by Reference (Feb 1998)*. This contract incorporates one or more clauses by reference, with the same force and effect as if they were given in full text. Upon request, the Contracting Officer will make their full text available. Also, the full text of a clause may be accessed electronically at this/these address(es):

_____

_____

[Insert one or more Internet addresses]

(d) *Inspection/Acceptance*. The Contractor shall tender for acceptance only those items that conform to the requirements of this contract. The Government reserves the right to inspect or test any supplies or services that have been tendered for acceptance. The Government may require repair or replacement of nonconforming supplies or reperformance of nonconforming services at no increase in contract price. The Government must exercise its postacceptance rights-

(1) Within a reasonable period of time after the defect was discovered or should have been discovered; and

(2) Before any substantial change occurs in the condition of the item, unless the change is due to the defect in the item.

(e) *Excusable delays*. The Contractor shall be liable for default unless nonperformance is caused by an occurrence beyond the reasonable control of the Contractor and without its fault or negligence, such as acts of God or the public enemy, acts of the Government in either its sovereign or contractual capacity, fires, floods, epidemics, quarantine restrictions, strikes, unusually severe weather, and delays of common carriers. The Contractor shall notify the Contracting Officer in writing as soon as it is reasonably possible after the commencement of any excusable delay, setting forth the full particulars in connection therewith, shall remedy such occurrence with all reasonable dispatch, and shall promptly give written notice to the Contracting Officer of the cessation of such occurrence.

(f) *Termination for the Government's convenience*. The Government reserves the right to terminate this contract, or any part hereof, for its sole convenience. In the event of such termination, the Contractor shall immediately stop all work hereunder and shall immediately cause any and all of its suppliers and subcontractors to cease work. Subject to the terms of this contract, the Contractor shall be paid a percentage of the contract price reflecting the percentage of the work performed prior to the notice of termination, plus reasonable charges that the Contractor can demonstrate to the satisfaction of the Government, using its standard record keeping system, have resulted from the termination. The Contractor shall not be required to comply with the cost accounting standards or contract cost principles for this purpose. This paragraph does not give the Government any right to audit the Contractor’s records. The Contractor shall not be paid for any work performed or costs incurred that reasonably could have been avoided.

(g) *Termination for cause*. The Government may terminate this contract, or any part hereof, for cause in the event of any default by the Contractor, or if the Contractor fails to comply with any contract terms and conditions, or fails to provide the Government, upon request, with adequate assurances of future performance. In the event of termination for cause, the Government shall not be liable to the Contractor for any amount for supplies or services not accepted, and the Contractor shall be liable to the Government for any and all rights and remedies provided by law. If it is determined that the Government improperly terminated this contract for default, such termination shall be deemed a termination for convenience.

(h) *Warranty*. The Contractor warrants and implies that the items delivered hereunder are merchantable and fit for use for the particular purpose described in this contract.

(End of clause)

Alternate I (NOV 2023) . As prescribed in 25.1102 (e), add the following definition of "Bahrainian, Mexican, or Omani construction material" to paragraph (a) of the basic clause, and substitute the following paragraphs (b)(1) and (b)(2) for paragraphs (b)(1) and (b)(2) of the basic clause:

Bahraini, Mexican, or Omani construction material means a construction material that-

(1)(1) Is wholly the growth, product, or manufacture of Bahrain, Mexico, or Oman; or

(2)(2) In the case of a construction material that consists in whole or in part of materials from another country, has been substantially transformed in Bahrain, Mexico, or Oman into a new and different construction material distinct from the materials from which it was transformed.

(b) *Construction materials.* (1) The restrictions of section 1605 of the American Recovery and Reinvestment Act of 2009 (Pub. L. 111-5) (Recovery Act) do not apply to Recovery Act designated country manufactured construction material. The restrictions of the Buy American statute do not apply to designated country unmanufactured construction material. Consistent with U.S. obligations under international agreements, this clause implements-

(i) Section 1605 of the Recovery Act, by requiring, unless an exception applies, that all manufactured construction material in the project is manufactured in the United States and, if the construction material consists wholly or predominantly of iron or steel, the iron or steel was produced in the United States (produced in the United States means that all manufacturing processes of the iron or steel must take place in the United States, except metallurgical processes involving refinement of steel additives); and

(ii) The Buy American statute by providing a preference for unmanufactured construction material mined or produced in the United States over unmanufactured construction material mined or produced in a nondesignated country.

(2) The Contractor shall use only domestic construction material, Recovery Act designated country manufactured construction material, or designated country unmanufactured construction

material, other than Bahraini, Mexican, or Omani construction material, in performing this contract, except as provided in paragraphs (b)(3) and (b)(4) of this clause.

II. THE FOLLOWING DEPARTMENT OF STATE ACQUISITION REGULATION (DOSAR) CLAUSE(S) IS/ARE SET FORTH IN FULL TEXT:

CONTRACTOR IDENTIFICATION (JULY 2008)

Contract performance may require contractor personnel to attend meetings with government personnel and the public, work within government offices, and/or utilize government email.

Contractor personnel must take the following actions to identify themselves as non-federal employees:

1) Use an e-mail signature block that shows name, the office being supported and company affiliation (e.g., "John Smith, Office of Human Resources, ACME Corporation Support Contractor");

2) Clearly identify themselves and their contractor affiliation in meetings.

3) Identify their contractor affiliation in Departmental e-mail and phone listings whenever contractor personnel are included in those listings; and

4) Contractor personnel may not utilize Department of State logos or indicia on business cards.

(End of clause)

652.204-70 DEPARTMENT OF STATE PERSONAL IDENTIFICATION CARD ISSUANCE PROCEDURES (FEB 2015)

(a) The Contractor shall comply with the Department of State (DOS) Personal Identification Card Policy and Procedures for all employees performing under this contract who require frequent and continuing access to DOS facilities, or information systems. The Contractor shall insert the substance of this clause in all subcontracts when the subcontractor's employees will require frequent and continuing access to DOS facilities, or information systems.

(b) The DOS Personal Identification Card Policy and Procedures may be accessed at *http://www.state.gov/m/ds/rls/rpt/c21664.htm*.

(End of clause)

652.229-71 PERSONAL PROPERTY DISPOSITION AT POSTS ABROAD (AUG 1999)

Regulations at 22 CFR Part 136 require that U.S. Government employees and their families do not profit personally from sales or other transactions with persons who are not

themselves entitled to exemption from import restrictions, duties, or taxes. Should the Contractor experience importation or tax privileges in a foreign country because of its contractual relationship to the United States Government, the Contractor shall observe the requirements of 22 CFR Part 136 and all policies, rules, and procedures issued by the chief of mission in that foreign country.

(End of clause)

652.236-70 ADDITIONAL SAFETY MEASURES (OCT 2017)

In addition to the safety/accident prevention requirements of FAR 52.236-13, Accident Prevention Alternate I, the contractor shall comply with the following additional safety measures.

(a) *High Risk Activities*. If the project contains any of the following high risk activities, the contractor shall follow the section in the latest edition, as of the date of the solicitation, of the U.S. Army Corps of Engineers Safety and Health manual, EM 385-1-1, that corresponds to the high risk activity. Before work may proceed, the contractor must obtain approval from the COR of the written safety plan required by FAR 52.236-13, Accident Prevention Alternate I (see paragraph (f) below), containing specific hazard mitigation and control techniques.

(1) Scaffolding;

(2) Work at heights above 1.8 meters;

(3) Trenching or other excavation greater than one (1) meter in depth;

(4) Earth-moving equipment and other large vehicles;

(5) Cranes and rigging;

(6) Welding or cutting and other hot work;

(7) Partial or total demolition of a structure;

(8) Temporary wiring, use of portable electric tools, or other recognized electrical hazards. Temporary wiring and portable electric tools require the use of a ground fault circuit interrupter (GFCI) in the affected circuits; other electrical hazards may also require the use of a GFCI;

(9) Work in confined spaces (limited exits, potential for oxygen less than 19.5 percent or combustible atmosphere, potential for solid or liquid engulfment, or other hazards considered to be immediately dangerous to life or health such as water tanks, transformer vaults, sewers, cisterns, etc.).

(10) Hazardous materials - a material with a physical or health hazard including but not limited to, flammable, explosive, corrosive, toxic, reactive or unstable, or any operations, which

creates any kind of contamination inside an occupied building such as dust from demolition activities, paints, solvents, etc.; or

(11) Hazardous noise levels as required in EM 385-1 Section 5B or local standards if more restrictive.

(b) *Safety and Health Requirements*. The contractor and all subcontractors shall comply with the latest edition of the U.S. Army Corps of Engineers Safety and Health manual EM 385-1-1, or OSHA 29 CFR parts 1910 or 1926 if no EM 385-1-1 requirements are applicable, and the accepted contractor's written safety program.

(c) *Mishap Reporting*. The contractor is required to report **immediately** all mishaps to the COR and the contracting officer. A "mishap" is any event causing injury, disease or illness, death, material loss or property damage, or incident causing environmental contamination. The mishap reporting requirement shall include fires, explosions, hazardous materials contamination, and other similar incidents that may threaten people, property, and equipment.

(d) *Records*. The contractor shall maintain an accurate record on all mishaps incident to work performed under this contract resulting in death, traumatic injury, occupational disease, or damage to or theft of property, materials, supplies, or equipment. The contractor shall report this data in the manner prescribed by the contracting officer.

(e) *Subcontracts*. The contractor shall insert this clause, including this paragraph (e), with appropriate changes in the designation of the parties, in subcontracts.

(f) *Written program*. The plan required by paragraph (f)(1) of the clause entitled "Accident Prevention Alternate I" shall be known as the Site Safety and Health Plan (SSHP) and shall address any activities listed in paragraph (a) of this clause, or as otherwise required by the contracting officer/COR.

(1) The SSHP shall be submitted at least 10 working days prior to commencing any activity at the site.

(2) The plan must address developing activity hazard analyses (AHAs) for specific tasks. The AHAs shall define the activities being performed and identify the work sequences, the specific anticipated hazards, site conditions, equipment, materials, and the control measures to be implemented to eliminate or reduce each hazard to an acceptable level of risk. Work shall not begin until the AHA for the work activity has been accepted by the COR and discussed with all engaged in the activity, including the Contractor, subcontractor(s), and Government on-site representatives.

(3) The names of the Competent/Qualified Person(s) required for a particular activity (for example, excavations, scaffolding, fall protection, other activities as specified by EM 385-1-1) shall be identified and included in the AHA. Proof of their competency/qualification shall be submitted to the contracting officer or COR for acceptance

prior to the start of that work activity. The AHA shall be reviewed and modified as necessary to address changing site conditions, operations, or change of competent/qualified person(s).

(End of clause)

652.242-73 AUTHORIZATION AND PERFORMANCE (AUG 1999)

(a) The Contractor warrants the following:

(1) That is has obtained authorization to operate and do business in the country or countries in which this contract will be performed;

(2) That is has obtained all necessary licenses and permits required to perform this contract; and,

(3) That it shall comply fully with all laws, decrees, labor standards, and regulations of said country or countries during the performance of this contract.

(b) If the party actually performing the work will be a subcontractor or joint venture partner, then such subcontractor or joint venture partner agrees to the requirements of paragraph (a) of this clause.

(End of clause)

652.243-70 NOTICES (AUG 1999)

Any notice or request relating to this contract given by either party to the other shall be in writing. Said notice or request shall be mailed or delivered by hand to the other party at the address provided in the schedule of the contract. All modifications to the contract must be made in writing by the Contracting Officer.

(End of clause)

SECTION I - LIST OF ATTACHMENTS

ATTACHMENT NUMBER	DESCRIPTION OF ATTACHMENT	NUMBER OF PAGES
Attachment 1	Standard Form 25, "Performance and Guaranty Bond N/A	2
Attachment 2	Standard Form 25A, "Payment Bond- N/A	1
Attachment 3	Sample Bank Letter of Guaranty	1
Attachment 4	Breakdown of Price by Divisions of Specifications	1
Attachment 5	Drawings	1
Attachment 6	Specifications	1

SECTION J – INSTRUCTIONS ON HOW TO SUBMIT A QUOTATION

The Offeror shall include Defense Base Act (DBA) insurance premium costs covering employees. The offeror may obtain DBA insurance directly from any Department of Labor approved providers at the DOL website at *http://www.dol.gov/owcp/dlhwc/lscarrier.htm*

A. QUALIFICATIONS OF OFFERORS

Offerors/quoters must be technically qualified and financially responsible to perform the work described in this solicitation. At a minimum, each Offeror/Quoter must meet the following requirements:

(1) Be able to understand written and spoken English.

(2) Have an established business with a permanent address and telephone listing in ***Kenya.***

(3) Submit Proof of Registration and authorization to carry out the task in the country (Kenya). Must be registered and certified by relevant regulatory body (National Contraction Authority, National Environmental Management Authority, Water Resources management

(4) If registered, the offeror shall provide proof of SAM registration to include the SAM UEI number.

(5) Proof of experience in similar/comparable projects. At least 3 successful projects in the last three years.

(6) Proof of technical expertise and equipment. Qualified personnel with valid professional licenses. Staffing schedule with corresponding qualifications and individuals' experience is required.

(7) Have all licenses and permits required by local law and financial resources available to perform the work.

(8) Provide detailed Gannt Chart/Project Schedule that captures and commits to reasonable timelines (at most 30 Construction days after the effective date of notice to proceed).

(9) Meet all local insurance requirements.

(10) Provide proof of insurance covers for liabilities arising from design, workers occupational risks, and other relevant financial risks.

(11) Have no adverse criminal record; and

(10) Have no political or business affiliation which could be considered contrary to the interests of the United States.

B. SUBMISSION OF QUOTATIONS

This solicitation is for the performance of the construction services described in SCOPE OF WORK, and the Attachments which are a part of this request for quotation.

Each quotation must consist of the following:		
VOLUME	TITLE	NUMBER OF COPIES*
I	Standard Form 1442 including a completed Attachment 4, "BREAKDOWN OF PROPOSAL PRICE BY DIVISIONS OF SPECIFICATIONS	1
II	Performance schedule in the form of a "Gantt chart" and Business Management/Technical Proposal	1

The Offeror/Quoter shall identify and explain/justify any deviations, exceptions, or conditional assumptions taken with respect to any of the instructions or requirements of this request for quotation in the appropriate volume of the offer.

Volume II: Performance schedule and Business Management/Technical Proposal.

(a) Present the performance schedule in the form of a "Gantt chart" indicating when the various portions of the work will be commenced and completed within the required schedule. This bar chart shall be in sufficient detail to clearly show each segregable portion of work and its planned commencement and completion date.

(b) The Business Management/Technical Proposal shall be in two parts, including the following information:

Proposed Work Information - Provide the following:

(1) A list of the names addresses and telephone numbers of the owners, partners, and principal officers of the Offeror.

(2) The name and address of the Offeror's field superintendent for this project.

(3) A list of the names, addresses, and telephone numbers of subcontractors and principal materials suppliers to be used on the project, indicating what portions of the work will be performed by them; and,

Experience and Past Performance - List all contracts and subcontracts your company has held over the past three years for the same or similar work. Provide the following information for each contract and subcontract:

(1) Customer's name, address, and telephone numbers of customer's lead contract and technical personnel.

(2) Contract number and type.

(3) Date of the contract award place(s) of performance, and completion dates; Contract dollar value.

(4) Brief description of the work, including responsibilities; and

(5) Any litigation currently in process or occurring within last 5 years.

C. 52.236-27 SITE VISIT (CONSTRUCTION) (FEB 1995)

(a) The clauses at 52.236-2, Differing Site Conditions, and 52.236-3, Site Investigations and Conditions Affecting the Work, will be included in any contract awarded as a result of this solicitation. Accordingly, offerors or quoters are urged and expected to inspect the site where the work will be performed.

(b) A site visit has been scheduled for **August 7, 2026.**

(c) Participants will meet at LOCHAB Construction Site.

D. MAGNITUDE OF CONSTRUCTION PROJECT

It is anticipated that the range in price of this contract will be: $25,000 to $100,000

E. LATE QUOTATIONS. Late quotations shall be handled in accordance with FAR.

F. 52.252-1 SOLICITATION PROVISIONS INCORPORATED BY REFERENCE (FEB 1998)

This solicitation incorporates one or more solicitation provisions by reference, with the same force and effect as if they were given in full text. Upon request, the Contracting Officer will make their full text available. In addition, the full text of a clause may be accessed electronically at Acquisition.gov this address is subject to change.

If the Federal Acquisition Regulation (FAR) is not available at the location indicated above, use the Department of State Acquisition website at e-CFR to see the links to the FAR. You may also use an Internet "search engine" (for example, Google, Yahoo or Excite) to obtain the latest location of the most current FAR.

THE FOLLOWING FEDERAL ACQUISITION REGULATION PROVISIONS ARE INCORPORATED BY REFERENCE (48 CFR CH. 1):

PROVISION	TITLE AND DATE
52.204-7	SYSTEM FOR AWARD MANAGEMENT (NOV 2024)
52.204-16	COMMERCIAL AND GOVERNMENT ENTITY CODE REPORTING (AUG 2020)
52.214-34	SUBMISSION OF OFFERS IN THE ENGLISH LANGUAGE (APR 1991)
52.215-1	INSTRUCTIONS TO OFFERORS--COMPETITIVE ACQUISITION (NOV 2021)

SECTION K - EVALUATION CRITERIA

Award will be made to the lowest priced, acceptable, responsible quoter. The Government reserves the right to reject quotations that are unreasonably low or high in price.

The Government will determine acceptability by assessing the offeror's compliance with the terms of the RFQ. The Government will determine responsibility by analyzing whether the apparent successful quoter complies with the requirements of FAR 9.1, including:

- ability to comply with the required performance period, taking into consideration all existing commercial and governmental business commitments.
- satisfactory record of integrity and business ethics.
- necessary organization, experience, and skills or the ability to obtain them.
- necessary equipment and facilities or the ability to obtain them; and
- otherwise, qualified, and eligible to receive an award under applicable laws and regulations.

SECTION L – REPRESENTATIONS, CERTIFICATIONS AND OTHER STATEMENTS

L.1 52.204-3 TAXPAYER IDENTIFICATION (OCT 1998)

(a) Definitions.

"Common parent", as used in this provision, means that corporate entity that owns or controls an affiliated group of corporations that files its Federal income tax returns on a consolidated basis, and of which the offeror is a member.

"Taxpayer Identification Number (TIN)", as used in this provision, means the number required by the IRS to be used by the offeror in reporting income tax and other returns. The TIN may be either a Social Security Number or an Employer Identification Number.

(b) All offerors must submit the information required in paragraphs (d) through (f) of this provision in order to comply with debt collection requirements of 31 U.S.C. 7701(c) and 3325 (d), reporting requirements of 26 USC 6041, 6041A, and 6050M and implementing regulations issued by the Internal Revenue Service (IRS). If the resulting contract is subject to the reporting requirements described in FAR 4.904, the failure or refusal by the offeror to furnish the information may result in a 31 percent reduction of payments

(c) otherwise due under the contract.

(d) The TIN may be used by the Government to collect and report on any delinquent amounts arising out of the offeror's relationship with the Government (3l USC 7701(c)(3)). If the resulting contract is subject to the payment reporting requirements described in FAR 4.904, the TIN provided hereunder may be matched with IRS records to verify the accuracy of the offeror's TIN.

(e) Taxpayer Identification Number (TIN).

TIN: _____

☐ TIN has been applied for.

☐ TIN is not required because:

☐ Offeror is a nonresident alien, foreign corporation, or foreign partnership that does not have income effectively connected with the conduct of a trade or business in the U.S. and does not have an office or place of business or a fiscal paying agent in the U.S.

☐ Offeror is an agency or instrumentality of a foreign government.

☐ Offeror is an agency or instrumentality of the Federal Government.

(e) Type of Organization.

☐ Sole Proprietorship.

☐ Partnership.

☐ Corporate Entity (not tax exempt).

☐ Corporate Entity (tax exempt).

☐ Government Entity (Federal, State, or local).

☐ Foreign Government.
☐ International organization per 26 CFR 1.6049-4.
☐ Other _____.

(f) Common Parent.
☐ Offeror is not owned or controlled by a common parent as defined in paragraph (a) of this clause.
☐ Name and TIN of common parent:
Name _____
TIN_____

(End of provision)

L.2 52.204-8 ANNUAL REPRESENTATIONS AND CERTIFICATIONS (JAN 2025)

(a) (1) The North American Industry Classification System (NAICS) code for this acquisition is_____ *[insert NAICS code]*.
(2) The small business size standard is _____ *[insert size standard]*.
(3) The small business size standard for a concern that submits an offer, other than on a construction or service acquisition, but proposes to furnish an end item that it did not itself manufacture, process, or produce is 500 employees, or 150 employees for information technology value-added resellers under NAICS code 541519 if the acquisition—
(i) Is set aside for small business and has a value above the simplified acquisition threshold;
(ii) Uses the HUBZone price evaluation preference regardless of dollar value, unless the offeror waives the price evaluation preference; or
(iii) Is an 8(a), HUBZone, service-disabled veteran-owned, economically disadvantaged women-owned, or women-owned small business set-aside or sole-source award regardless of dollar value.

(b) (1) If the provision at 52.204-7, System for Award Management, is included in this solicitation, paragraph (d) of this provision applies.

(2) If the provision at 52.204-7, System for Award Management, is not included in this solicitation, and the Offeror has an active registration in the System for Award Management (SAM), the Offeror may choose to use paragraph (d) of this provision instead of completing the corresponding individual representations and certifications in the solicitation.
The Offeror shall indicate which option applies by checking one of the following boxes:

(i) □ Paragraph (d) applies.
(ii) □ Paragraph (d) does not apply and the offeror has completed the individual representations and certifications in the solicitation.

(c) (1) The following representations or certifications in SAM are applicable to this solicitation as indicated:

(i) 52.203-2, Certificate of Independent Price Determination. This provision applies to solicitations when a firm-fixed-price contract or fixed-price contract with economic price adjustment is contemplated, unless–

(A) The acquisition is to be made under the simplified acquisition procedures in part 13;
(B) The solicitation is a request for technical proposals under two-step sealed bidding procedures; or
(C) The solicitation is for utility services for which rates are set by law or regulation.

(ii) 52.203-11, Certification and Disclosure Regarding Payments to Influence Certain Federal Transactions. This provision applies to solicitations expected to exceed $150,000.
(iii) 52.203-18, Prohibition on Contracting with Entities that Require Certain Internal Confidentiality Agreements or Statements-Representation. This provision applies to all solicitations.
(iv) 52.204-3, Taxpayer Identification. This provision applies to solicitations that do not include the provision at 52.204-7, System for Award Management.

(v) 52.204-5, Women-Owned Business (Other Than Small Business). This provision applies to solicitations that-

(A) Are not set aside for small business concerns;
(B) Exceed the simplified acquisition threshold; and
(C) Are for contracts that will be performed in the United States or its outlying areas.

(vi) 52.204-26, Covered Telecommunications Equipment or Services-Representation. This provision applies to all solicitations.
(vii) 52.209-2, Prohibition on Contracting with Inverted Domestic Corporations-Representation.
(viii) 52.209-5, Certification Regarding Responsibility Matters. This provision applies to solicitations where the contract value is expected to exceed the simplified acquisition threshold.
(ix) 52.209-11, Representation by Corporations Regarding Delinquent Tax Liability or a Felony Conviction under any Federal Law. This provision applies to all solicitations.
(x) 52.214-14, Place of Performance-Sealed Bidding. This provision applies to invitations for bids except those in which the place of performance is specified by the Government.
(xi) 52.215-6, Place of Performance. This provision applies to solicitations unless the place of performance is specified by the Government.

(xii) 52.219-1, Small Business Program Representations (Basic, Alternates I, and II). This provision applies to solicitations when the contract is for supplies to be delivered or services to be performed in the United States or its outlying areas, or when the contracting officer has applied part 19 in accordance with 19.000(b)(1)(ii).

(A) The basic provision applies when the solicitations are issued by other than DoD, NASA, and the Coast Guard.
(B) The provision with its Alternate I applies to solicitations issued by DoD, NASA, or the Coast Guard.

(C) The provision with its Alternate II applies to solicitations that will result in a multiple-award contract with more than one NAICS code assigned.

(xiii) 52.219-2, Equal Low Bids. This provision applies to solicitations when contracting by sealed bidding and the contract is for supplies to be delivered or services to be performed in the United States or its outlying areas, or when the contracting officer has applied part 19 in accordance with 19.000(b)(1)(ii).
(xiv) 52.222-22, Previous Contracts and Compliance Reports. This provision applies to solicitations that include the clause at 52.222-26, Equal Opportunity.
(xv) 52.222-25, Affirmative Action Compliance. This provision applies to solicitations, other than those for construction, when the solicitation includes the clause at 52.222-26, Equal Opportunity.
(xvi) 52.222-38, Compliance with Veterans' Employment Reporting Requirements. This provision applies to solicitations when it is anticipated the contract award will exceed the simplified acquisition threshold and the contract is not for acquisition of commercial products or commercial services.
(xvii) 52.223-1, Biobased Product Certification. This provision applies to solicitations that require the delivery or specify the use of biobased products in USDA-designated product categories; or include the clause at 52.223-2, Reporting of Biobased Products Under Service and Construction Contracts.
(xviii) 52.223-4, Recovered Material Certification. This provision applies to solicitations that are for, or specify the use of, EPA–designated items.
(xix) 52.223-22, Public Disclosure of Greenhouse Gas Emissions and Reduction Goals-Representation. This provision applies to solicitations that include the provision at 52.204-7.
(xx) 52.225-2, Buy American Certificate. This provision applies to solicitations containing the clause at 52.225-1.
(xxi) 52.225-4, Buy American-Free Trade Agreements-Israeli Trade Act Certificate. (Basic, Alternates II and III.) This provision applies to solicitations containing the clause at 52.225-3.

(A) If the acquisition value is less than $50,000, the basic provision applies.
(B) If the acquisition value is $50,000 or more but is less than $100,000, the provision with its Alternate II applies.
(C) If the acquisition value is $100,000 or more but is less than $102,280, the provision with its Alternate III applies.

(xxii) 52.225-6, Trade Agreements Certificate. This provision applies to solicitations containing the clause at 52.225-5.
(xxiii) 52.225-20, Prohibition on Conducting Restricted Business Operations in Sudan-Certification. This provision applies to all solicitations.
(xxiv) 52.225-25, Prohibition on Contracting with Entities Engaging in Certain Activities or Transactions Relating to Iran-Representation and Certifications. This provision applies to all solicitations.
(xxv) 52.226-2, Historically Black College or University and Minority Institution Representation. This provision applies to solicitations for research, studies, supplies, or services of the type normally acquired from higher educational institutions.

(2) The following representations or certifications are applicable as indicated by the Contracting Officer:
[*Contracting Officer check as appropriate.*]
__ (i) 52.204-17, Ownership or Control of Offeror.
__ (ii) 52.204-20, Predecessor of Offeror.
__ (iii) 52.222-18, Certification Regarding Knowledge of Child Labor for Listed End Products.
__ (iv) 52.222-48, Exemption from Application of the Service Contract Labor Standards to Contracts for Maintenance, Calibration, or Repair of Certain Equipment- Certification.
__ (v) 52.222-52, Exemption from Application of the Service Contract Labor Standards to Contracts for Certain Services-Certification.
__ (vi) 52.227-6, Royalty Information.
__ (A) Basic.
__ (B) Alternate I.
__ (vii) 52.227-15, Representation of Limited Rights Data and Restricted Computer Software.
(d) The offeror has completed the annual representations and certifications electronically in SAM website accessed through https://www.sam.gov. After reviewing the SAM information, the offeror verifies by submission of the offer that the representations and certifications currently posted electronically that apply to this solicitation as indicated in paragraph (c) of this provision have been entered or updated within the last 12 months, are current, accurate, complete, and applicable to this solicitation (including the business size standard applicable to the NAICS code referenced for this solicitation), as of the date of this offer and are incorporated in this offer by reference (see FAR 4.1201); except for the changes identified below [*offeror to insert changes, identifying change by clause number, title, date*]. These amended representation(s) and/or certification(s) are also incorporated in this offer and are current, accurate, and complete as of the date of this offer.

FAR Clause # Title Date Change

_____

Any changes provided by the offeror are applicable to this solicitation only, and do not result in an update to the representations and certifications posted on SAM.

(End of provision)

Alternate I (Mar 2023). As prescribed in 4.1202(a) , substitute the following paragraph (a) for paragraph (a) of the basic provision:
(a)(1) The North American Industry Classification System (NAICS) codes and corresponding size standards for this acquisition are as follows; the categories or portions these NAICS codes are assigned to are specified elsewhere in the solicitation:

NAICS Code	**Size standard**
_____	_____

NAICS Code	Size standard
_____	_____
_____	_____

[*Contracting Officer to insert NAICS codes and size standards*].
(2) The small business size standard for a concern that submits an offer, other than on a construction or service acquisition, but proposes to furnish an end item that it did not itself manufacture, process, or produce, (i.e., nonmanufacturer), is 500 employees, or 150 employees for information technology value-added resellers under NAICS code 541519, if the acquisition—
(i) Is set aside for small business and has a value above the simplified acquisition threshold;
(ii) Uses the HUBZone price evaluation preference regardless of dollar value, unless the offeror waives the price evaluation preference; or
(iii) Is an 8(a), HUBZone, service-disabled veteran-owned, economically disadvantaged women-owned, or women-owned small business set-aside or sole-source award regardless of dollar value.

L.3. 52.204–24 REPRESENTATION REGARDING CERTAIN TELECOMMUNICATIONS AND VIDEO SURVEILLANCE SERVICES OR EQUIPMENT (NOV 2021)

The Offeror shall not complete the representation at paragraph (d)(1) of this provision if the Offeror has represented that it "does not provide covered telecommunications equipment or services as a part of its offered products or services to the Government in the performance of any contract, subcontract, or other contractual instrument" in paragraph (c)(1) in the provision at 52.204-26, Covered Telecommunications Equipment or Services—Representation, or in paragraph (v)(2)(i) of the provision at 52.212-3, Offeror Representations and Certifications-Commercial Products or Commercial Services. The Offeror shall not complete the representation in paragraph (d)(2) of this provision if the Offeror has represented that it "does not use covered telecommunications equipment or services, or any equipment, system, or service that uses covered telecommunications equipment or services" in paragraph (c)(2) of the provision at 52.204-26, or in paragraph (v)(2)(ii) of the provision at 52.212-3.

(a) *Definitions.* As used in this provision—

Backhaul, covered telecommunications equipment or services, critical technology, interconnection arrangements, reasonable inquiry, roaming, and substantial or essential component have the meanings provided in the clause 52.204-25, Prohibition on Contracting for Certain Telecommunications and Video Surveillance Services or Equipment.

(b) *Prohibition*.

(1) Section 889(a)(1)(A) of the John S. McCain National Defense Authorization Act for Fiscal Year 2019 (Pub. L. 115-232) prohibits the head of an executive agency on or after August 13, 2019, from procuring or obtaining, or extending or renewing a contract to procure or obtain, any equipment, system, or service that uses covered telecommunications equipment or services as a

substantial or essential component of any system, or as critical technology as part of any system. Nothing in the prohibition shall be construed to—

(i) Prohibit the head of an executive agency from procuring with an entity to provide a service that connects to the facilities of a third-party, such as backhaul, roaming, or interconnection arrangements; or

(ii) Cover telecommunications equipment that cannot route or redirect user data traffic or cannot permit visibility into any user data or packets that such equipment transmits or otherwise handles.

(2) Section 889(a)(1)(B) of the John S. McCain National Defense Authorization Act for Fiscal Year 2019 (Pub. L. 115-232) prohibits the head of an executive agency on or after August 13, 2020, from entering into a contract or extending or renewing a contract with an entity that uses any equipment, system, or service that uses covered telecommunications equipment or services as a substantial or essential component of any system, or as critical technology as part of any system. This prohibition applies to the use of covered telecommunications equipment or services, regardless of whether that use is in performance of work under a Federal contract. Nothing in the prohibition shall be construed to—

(i) Prohibit the head of an executive agency from procuring with an entity to provide a service that connects to the facilities of a third-party, such as backhaul, roaming, or interconnection arrangements; or

(ii) Cover telecommunications equipment that cannot route or redirect user data traffic or cannot permit visibility into any user data or packets that such equipment transmits or otherwise handles.

(c) *Procedures.* The Offeror shall review the list of excluded parties in the System for Award Management (SAM) (https://www.sam.gov) for entities excluded from receiving federal awards for "covered telecommunications equipment or services".

(d) *Representation.* The Offeror represents that—

(1) It □ will, □ will not provide covered telecommunications equipment or services to the Government in the performance of any contract, subcontract or other contractual instrument resulting from this solicitation. The Offeror shall provide the additional disclosure information required at paragraph (e)(1) of this section if the Offeror responds "will" in paragraph (d)(1) of this section; and

(2) After conducting a reasonable inquiry, for purposes of this representation, the Offeror represents that—

It □ does, □ does not use covered telecommunications equipment or services, or use any equipment, system, or service that uses covered telecommunications equipment or services. The Offeror shall provide the additional disclosure information required at paragraph (e)(2) of this section if the Offeror responds "does" in paragraph (d)(2) of this section.

(e) *Disclosures.*

(1) Disclosure for the representation in paragraph (d)(1) of this provision. If the Offeror has responded "will" in the representation in paragraph (d)(1) of this provision, the Offeror shall provide the following information as part of the offer:

(i) For covered equipment—

(A) The entity that produced the covered telecommunications equipment (include entity name, unique entity identifier, CAGE code, and whether the entity was the original equipment manufacturer (OEM) or a distributor, if known);

(B) A description of all covered telecommunications equipment offered (include brand; model number, such as OEM number, manufacturer part number, or wholesaler number; and item description, as applicable); and

(C) Explanation of the proposed use of covered telecommunications equipment and any factors relevant to determining if such use would be permissible under the prohibition in paragraph (b)(1) of this provision.

(ii) For covered services—

(A) If the service is related to item maintenance: A description of all covered telecommunications services offered (include on the item being maintained: Brand; model number, such as OEM number, manufacturer part number, or wholesaler number; and item description, as applicable); or

(B) If not associated with maintenance, the Product Service Code (PSC) of the service being provided; and explanation of the proposed use of covered telecommunications services and any factors relevant to determining if such use would be permissible under the prohibition in paragraph (b)(1) of this provision.

(2) Disclosure for the representation in paragraph (d)(2) of this provision. If the Offeror has responded "does" in the representation in paragraph (d)(2) of this provision, the Offeror shall provide the following information as part of the offer:

(i) For covered equipment—

(A) The entity that produced the covered telecommunications equipment (include entity name, unique entity identifier, CAGE code, and whether the entity was the OEM or a distributor, if known);

(B) A description of all covered telecommunications equipment offered (include brand; model number, such as OEM number, manufacturer part number, or wholesaler number; and item description, as applicable); and

(C) Explanation of the proposed use of covered telecommunications equipment and any factors relevant to determining if such use would be permissible under the prohibition in paragraph (b)(2) of this provision.

(ii) For covered services—

(A) If the service is related to item maintenance: A description of all covered telecommunications services offered (include on the item being maintained: Brand; model number, such as OEM number, manufacturer part number, or wholesaler number; and item description, as applicable); or

(B) If not associated with maintenance, the PSC of the service being provided; and explanation of the proposed use of covered telecommunications services and any factors relevant to determining if such use would be permissible under the prohibition in paragraph (b)(2) of this provision.

(End of provision)

L.4. 52.204-26 COVERED TELECOMMUNICATIONS EQUIPMENT OR SERVICES-REPRESENTATION (OCT 2020)

(a) *Definitions.* As used in this provision, "covered telecommunications equipment or services" and "reasonable inquiry" have the meaning provided in the clause 52.204-25, Prohibition on Contracting for Certain Telecommunications and Video Surveillance Services or Equipment.
(b) *Procedures.* The Offeror shall review the list of excluded parties in the System for Award Management (SAM) (*https://www.sam.gov*) for entities excluded from receiving federal awards for "covered telecommunications equipment or services".
(c) *Representations.* (1) The Offeror represents that it [ ] does, [ ] does not provide covered telecommunications equipment or services as a part of its offered products or services to the Government in the performance of any contract, subcontract, or other contractual instrument.
(2) After conducting a reasonable inquiry for purposes of this representation, the Offeror represents that it [ ] does, [ ] does not use covered telecommunications equipment or services, or any equipment, system, or service that uses covered telecommunications equipment or services.

(End of Provision)

L.5. 52.209-2 PROHIBITION ON CONTRACTING WITH INVERTED DOMESTIC CORPORATIONS' REPRESENTATION (NOV 2015)

(a) Definitions. "Inverted domestic corporation" and "subsidiary" have the meaning given in the clause of this contract entitled Prohibition on Contracting with Inverted Domestic Corporations (52.209-10).

(b) Government agencies are not permitted to use appropriated (or otherwise made available) funds for contracts with either an inverted domestic corporation, or a subsidiary of an inverted domestic corporation, unless the exception at 9.108-2(b) applies or the requirement is waived in accordance with the procedures at 9.108-4.

(c) Representation. The Offeror represents that.

(1) It □ is, □ is not an inverted domestic corporation; and

(2) It □ is, □ is not a subsidiary of an inverted domestic corporation.

(End of provision)

L.6 AUTHORIZED CONTRACTOR ADMINISTRATOR

If the offeror does not fill-in the blanks below, the official who signed the offer will be deemed to be the offeror's representative for Contract Administration, which includes all matters pertaining to payments.

Name:
Telephone Number:
Address:

L.7. 52.225-20 PROHIBITION ON CONDUCTING RESTRICTED BUSINESS OPERATIONS IN SUDAN – CERTIFICATION (AUG 2009)

(a) *Definitions*. As used in this provision—

"Business operations" means engaging in commerce in any form, including by acquiring, developing, maintaining, owning, selling, possessing, leasing, or operating equipment, facilities, personnel, products, services, personal property, real property, or any other apparatus of business or commerce.

"Marginalized populations of Sudan" means—

(1) Adversely affected groups in regions authorized to receive assistance under section 8(c) of the Darfur Peace and Accountability Act (Pub. L. 109-344) (50 U.S.C. 1701 note); and

(2) Marginalized areas in Northern Sudan described in section 4(9) of such Act.

"Restricted business operations" means business operations in Sudan that include power production activities, mineral extraction activities, oil-related activities, or the production of military equipment, as those terms are defined in the Sudan Accountability and Divestment Act of 2007 (Pub. L. 110-174). Restricted business operations do not include business operations that the person conducting the business can demonstrate—

(1) Are conducted under contract directly and exclusively with the regional government of southern Sudan;

(2) Are conducted pursuant to specific authorization from the Office of Foreign Assets Control in the Department of the Treasury, or are expressly exempted under Federal law from the requirement to be conducted under such authorization;

(3) Consist of providing goods or services to marginalized populations of Sudan;

(4) Consist of providing goods or services to an internationally recognized peacekeeping force or humanitarian organization;

(5) Consist of providing goods or services that are used only to promote health or education; or

(6) Have been voluntarily suspended.

(c) *Certification*. By submission of its offer, the offeror certifies that it does not conduct any restricted business operations in Sudan.

52.225-25 PROHIBITION ON CONTRACTING WITH ENTITIES ENGAGING IN CERTAIN ACTIVITIES OR TRANSACTIONS RELATING TO IRAN—REPRESENTATION AND CERTIFICATIONS (JUN 2020)

ATTACHMENT #1

STANDARD FROM 25, "PERFORMANCE AND GUARANTY BOND"
RESERVED

ATTACHMENT #2

STANDARD FORM 25A, "PAYMENT BOND"

RESERVED

ATTACHMENT #3 - SAMPLE LETTER OF BANK GUARANTY

Place [ ]
Date [ ]

Contracting Officer
U.S. Embassy, **[*Note to CO: insert Post name*]**
[*Note to CO: insert mailing address*]

Letter of Guaranty No. _____

SUBJECT: Performance and Guaranty

The Undersigned, acting as the duly authorized representative of the bank, declares that the bank hereby guarantees to make payment to the Contracting Officer by check made payable to the Treasurer of the United States, immediately upon notice, after receipt of a simple written request from the Contracting Officer, immediately and entirely without any need for the Contracting Officer to protest or take any legal action or obtain the prior consent of the Contractor to show any other proof, action, or decision by an other authority, up to the sum of **[*amount equal to 20% of the contract price in U.S. dollars during the period ending with the date of final acceptance and 10% of the contract price during contract guaranty period*]**, which represents the deposit required of the Contractor to guarantee fulfillment of his obligations for the satisfactory, complete, and timely performance of the said contract **[*contract number*]** for **[*description of work*]** at **[*location of work*]** in strict compliance with the terms, conditions and specifications of said contract, entered into between the Government and **[*name of contractor*]** of **[*address of contractor*]** on **[*contract date*]**, plus legal charges of 10% per annum on the amount called due, calculated on the sixth day following receipt of the Contracting Officer's written request until the date of payment.

The undersigned agrees and consents that said contract may be modified by Change Order or Supplemental Agreement affecting the validity of the guaranty provided, however, that the amount of this guaranty shall remain unchanged.

The undersigned agrees and consents that the Contracting Officer may make repeated partial demands on the guaranty up to the total amount of this guaranty, and the bank will promptly honor each individual demand.

This letter of guaranty shall remain in effect until 3 months after completion of the guaranty period of Contract requirement.

Depository Institution: **[*name*]**
Address: _____
Representatives: Location: _____
_____ State of Inc.: _____
_____ Corporate Seal:

Certificate of Authority is attached evidencing authority of the signer to bind the bank to this document.

ATTACHMENT #4

UNITED STATES DEPARTMENT OF STATE
BREAKDOWN OF PRICE BY DIVISIONS OF SPECIFICATIONS

(1) Division/Description	(2) Labor	(3) Materials	(4) Overhead	(5) Profit	(6) Total
1. General Requirements/ Mobilization					
2. Site Work					
3. Concrete					
4. Masonry					
5. Metals					
6. Wood and Plastic					
7. Thermal and Moisture					
8. Doors and Windows					
9. Finishes					
10. Specialties					
11. Equipment					
12. Furnishings					
13. Special Construction					
14. Conveying Systems					
15. Mechanical					
16. Electrical					
TOTAL:					

Allowance Items:

PROPOSAL PRICE TOTAL: in **Kenya Shillings**_____

Alternates (list separately; do not total):

Offeror: ***Date***

ATTACHMENT #5 – DRAWINGS

Appendix 1: Elevation details
Appendix 2: Piping plan and above surface elevations.
Appendix 3: Plumbing riser dwg

Appendix 1: Elevation details.

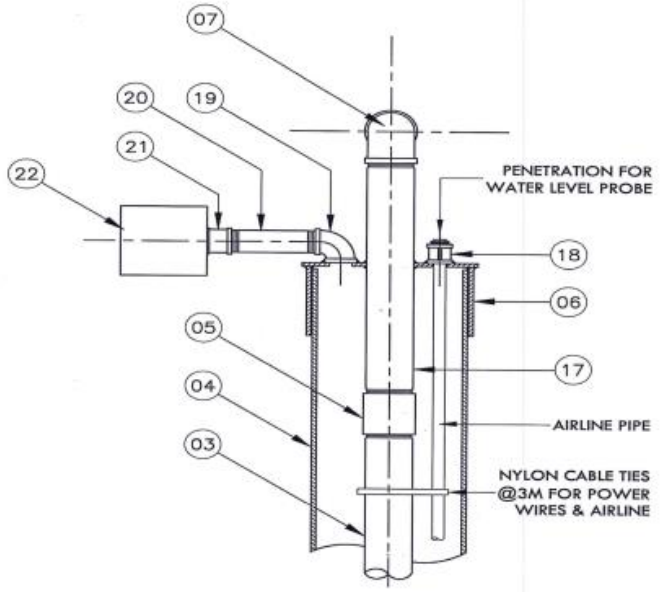

BOREHOLE SECTIONB–B
BOREHOLE COVER

ITEM NO.	DESCRIPTION
01	SUBMERSIBLE MOTOR PUMPSET WITH NON–RETURN VALVE, CABLE CONNECTOR, SUBMERSIBLE CABLE, MOTOR SHROUD & CABLE TIES @3M (POWER LINE & AIRLINE)
02	LEVEL SENSOR WITH CABLE
03	DN50* GI RISER PIPE, PN16, L=6.0m INCLUDING STEAM SOCKETS
04	10"(254mm) BOREHOLE CASING
05	DN50* THREADED STEAM SOCKETS
06	WATERTIGHT BOREHOLE COVER FABRICATED FROM 8mm STEEL PLATE
07	DN50* THREADED 90° ELBOW
08	DN50* UNION
09	DN20 EQUAL TEE WITH END PLUG
10	PRESSURE GAUGE
11	DN50* TEE
12	DN50* NON RETURN VALVE
13	PNEUMATIC FLOW SWITCH CONTROLLER
14	DN20 TAP
15	WATER METER PROVIDED BY NAIROBI WATER
16	DN50* THREADED GATE VALVE
17	DN50* 600mm THREADED GI PIPE & WELDED TO BOREHOLE COVER
18	DN25 THREADED STEAM SOCKET WITH ONE END WELDED TO BOREHOLE COVER & OTHER END CLOSED WITH END PLUG. (PENETRATION FOR WATER LEVEL PROBE)
19	DN40 THREADED 90° ELBOW WITH ONE END WELDED TO BOREHOLE COVER
20	DN40 300mm THREADED GI PIPE
21	DN40 THREADED STEAM SOCKET WELDED TO JUNCTION BOX
22	ELECTRICAL JUNCTION BOX
*	PIPE DIAMETER WILL BE SELECTED BASED ON AQUIFER TEST RESULTS (PIPE DIAMETER WILL ACHIEVE REQUIRED FLOW RATE AND MIN VELOCITY TO MOVE SAND)

Appendix 2: Piping plan and above surface elevations.

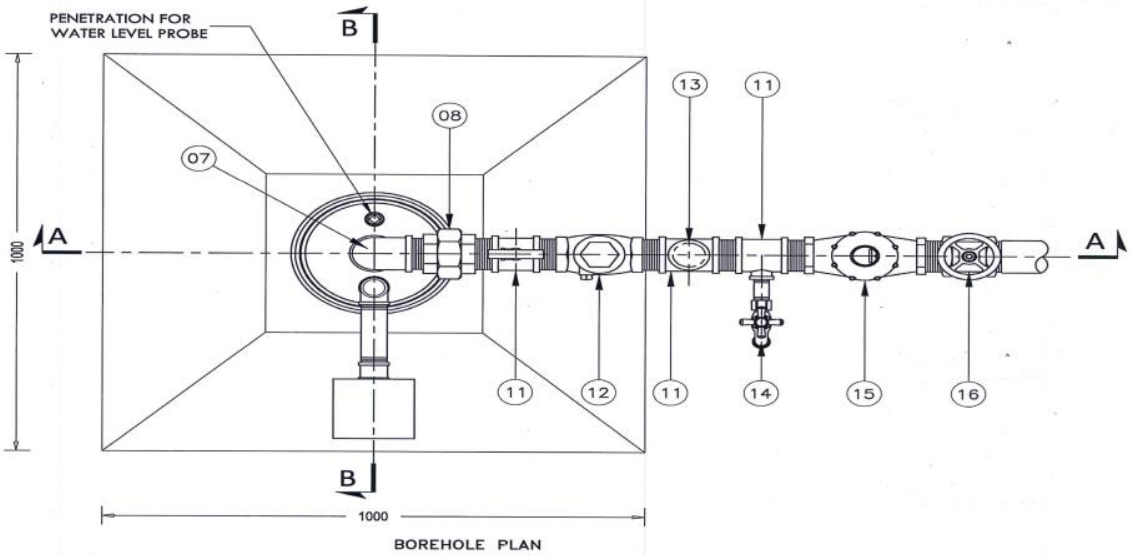

BOREHOLE PLAN

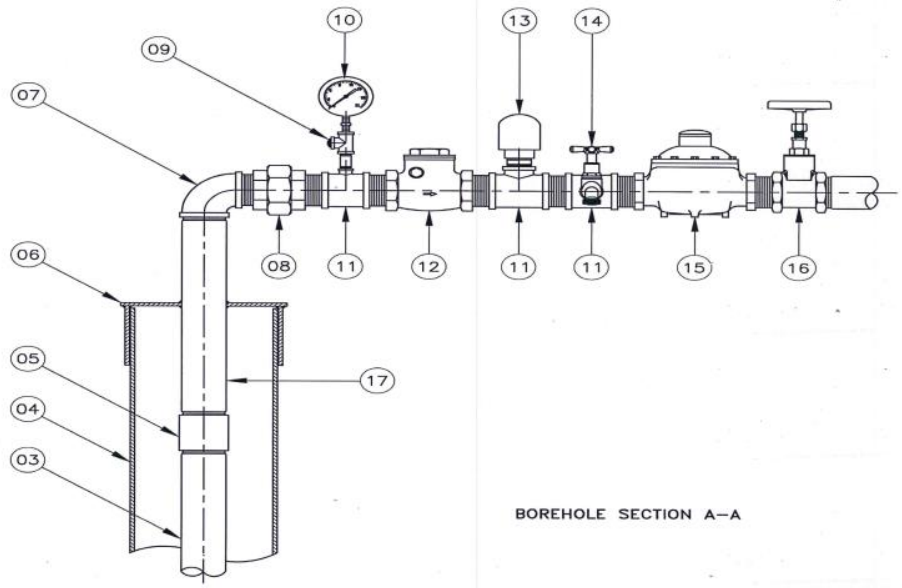

BOREHOLE SECTION A–A

Appendix 3: Plumbing riser dwg

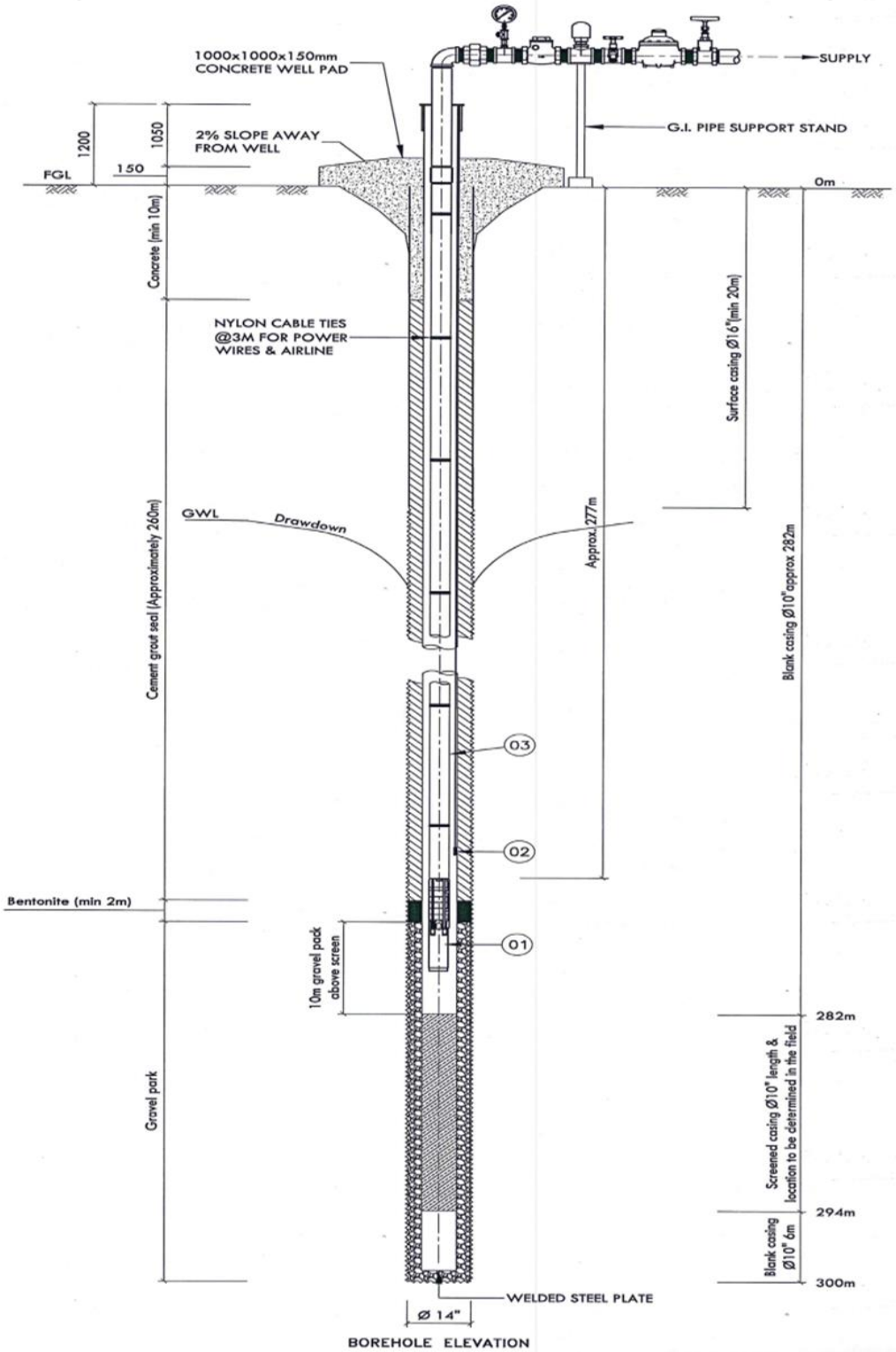

ATTACHMENT #6 - SPECIFICATIONS

Appendix 4. Site Location.
Appendix 5: AHA.
Appendix 6: Propose Work Schedule Sample.
Appendix 7: Pump Specifications.
Appendix 8: Pump Controller Specifications.

Appendix 4:

Site location

A site location image of the site courtesy of Google Earth

Appendix 5: AHA

Activity/Work Task:	Overall Risk Assessment Code (RAC) (Use highest code)	
Project Location:	**Risk Assessment Code (RAC) Matrix**	
Contract Number:		
Date Prepared:		
Prepared by (Name/Title):		
Reviewed by (Name/Title):		

Severity	**Probability**				
	Frequent	Likely	Occasional	Seldom	Unlikely
Catastrophic	**E**	**E**	**H**	**H**	**M**
Critical	**E**	**H**	**H**	**M**	**L**
Marginal	**H**	**M**	**M**	**L**	**L**
Negligible	**M**	**L**	**L**	**L**	**L**

Notes: (Field Notes, Review Comments, etc.)

Step 1: Review each **"Hazard"** with identified safety **"Controls"** and determine RAC (See above)

"Probability" is the likelihood to cause an incident, near miss, or accident and identified as: Frequent, Likely, Occasional, Seldom or Unlikely.

"Severity" is the outcome/degree if an incident, near miss, or accident did occur and identified as: Catastrophic, Critical, Marginal, or Negligible

Step 2: Identify the RAC (Probability/Severity) as E, H, M, or L for each "Hazard" on AHA. Annotate the overall highest RAC at the top of AHA.

RAC Chart

E = Extremely High Risk

H = High Risk

M = Moderate Risk

L = Low Risk

Job Steps	Hazards	Controls	RAC

Equipment to be Used	Training Requirements/Competent or Qualified Personnel name(s)	Inspection Requirements

Appendix 6: Propose Work Schedule Sample

Timeline:

PROPOSED WORK SCHEDULE					
#	Task Descriptions	Week 1	Week 2	Week 3	Week 4
1	Preliminary work: Interpretation of drilling consultant's documents, Submission of satisfactory Activity Hazard Analysis (AHA), Work Schedule, Equipment schedules, Staffing Schedule.				
2	Site mobilization to facilitate drilling operation. Bringing and setting up the drilling rig at site,				
3	Provide labor, equipment/tools to support installation of 360 meters deep borehole. Avail of the appropriate proportion of workers required for the work. Undertake drilling as per provided design.				
4	Provide materials to support installation of 360 meters borehole steel casing with perforations and filter media as per design. Avail the appropriate proportion of workers required for the installation. Install complete steel casing, associated accessories and filter media as per design.				
5	Provide materials to support installation water pump as per design. This shall include but not limited to GI water pipes with all associated fittings. Avail the appropriate proportion of workers required for the work, undertaking pump testing and commissioning.				
6	Site demobilization and ground restoration.				

Appendix 7: Pump Specifications:

GRUNDFOS

Company name:
Created by:
Phone:

Date: 17/02/2026

Qty.	Description
1	SP 17-27

Note! Product picture may differ from actual product

Product No.: 12A01927

Submersible borehole pump, suitable for pumping clean water. Can be installed vertically or horizontally. All steel components are made in stainless steel, EN 1.4301 (AISI 304), that ensures high corrosive resistance. This pump carries drinking water approval.

The pump is fitted with a 15 kW MS6000 motor with sand shield, mechanical shaft seal, water-lubricated journal bearings and a volume compensating diaphragm. The motor is a canned type submersible motor offering good mechanical stability and high efficiency. Suitable for temperatures up to 40 °C.

The motor is fitted with the Grundfos Tempcon sensor that, by use of powerline communication together with a MP204 control panel, enables temperature monitoring.

The motor is for direct-on-line starting (DOL).

Liquid:

Pumped liquid:	Water
Liquid temperature range:	-15 .. 40 °C
Max liquid t at 0.15 m/sec:	40 °C
Selected liquid temperature:	20 °C
Density:	998.2 kg/m³

Technical:

Pump speed on which pump data are based: 2900 rpm

Rated flow:	17 m³/h
Rated head:	222 m
Shaft seal for motor:	CER/CARNBR
Approvals:	CE,EAC,UKCA,SEPRO,MOROCCO
Approvals for drinking water:	ACS,DM174
Curve tolerance:	ISO9906:2012 3B
Motor version:	T40
Return valve:	YES

Materials:

Pump:	Stainless steel EN 1.4301 AISI 304
Impeller:	Stainless steel EN 1.4301 AISI 304
Motor:	Stainless steel DIN W.-Nr. 1.4301

Printed from Grundfos Product Centre [2026.07.001] 1

GRUNDFOS

Company name:
Created by:
Phone:

Date: 17/02/2026

Qty.	Description	
1	Installation:	
	Maximum ambient pressure:	60 bar
	Maximum operating pressure:	60 bar
	Maximum outlet pressure:	30.6 bar
	Type of connection:	Rp
	Size of connection:	2 1/2 inch
	Motor diameter:	6 inch
	Minimum borehole diameter:	145 mm
	Electrical data:	
	Motor type:	MS6000
	Motor flange design:	Grundfos
	Rated power - P2:	15 kW
	Power (P2) required by pump:	15 kW
	Mains frequency:	50 Hz
	Rated voltage:	3 x 380-400-415 V
	Rated current:	34.5-33.5-33.5 A
	Starting current:	490-540-570 %
	Cos phi - power factor:	0.85-0.82-0.79
	Rated speed:	2860-2870-2880 rpm
	Start. method:	direct-on-line
	Method of start:	Direct-on-line (DOL)
	Enclosure class (IEC 34-5):	IP68
	Insulation class (IEC 85):	F
	Built-in temp. transmitter:	yes
	Length of cable:	5 m
	Power cable type:	FLAT
	Motor No:	78195516
	Windings:	Enamelled
	Others:	
	Minimum efficiency index, MEI ≥:	0.70
	Net weight:	96.7 kg
	Gross weight:	134 kg
	Shipping volume:	0.338 m³
	Environmental approvals:	WEEE

Appendix 8:

PUMP CONTROLLER SPECIFICATIONS: **LOGIC CONTROL PANEL (LCP) SPECIFICATION**

For 18.5 kW (25 HP) – 415 V, 3-Phase Motor

General Description
Supply, install, test and commission a wall-mounted / floor-standing Logic Control Panel designed to control and protect one 18.5 kW, 415 V, 50 Hz, 3-phase motor (pump/fan/blower/compressor etc.) including automatic and manual control, protection, and status indication.

Electrical Design Parameters

Item	**Specification**
Rated Voltage	415 V ±10%
Phase	3 Phase + Neutral + Earth
Frequency	50 Hz
Motor Power	18.5 kW (25 HP)
Full Load Current (approx)	32 – 36 A
Fault Level Withstand	≥ 25 kA for 1 sec
Control Voltage	230 VAC / 24 VDC

Type of Motor Starter
(Select based on application — recommended option shown)
Recommended: Star–Delta Starter
Reason: Reduces starting current for 25HP motors.
Alternative options (if specified):

- Direct-On-Line (DOL) – if utility permits
- Soft Starter – smoother start
- VFD – if speed control required

Incoming Section
Main Incomer

- **MCCB:**
    - 63 A, 3-pole, thermal-magnetic
    - Adjustable overload & short-circuit protection
    - Breaking capacity ≥ 25 kA

Protection Devices

- Phase failure relay

- Phase sequence relay
- Under/over-voltage relay
- Surge protection device (SPD – Type II)

Motor Starting Section (Star-Delta)
Contactors (AC-3 Duty)

Contactor	Rating
Main Contactor	50 A
Star Contactor	32 A
Delta Contactor	50 A

- Mechanical and electrical interlocking required.

Overload Relay

- Adjustable range: **28 – 40 A**
- Class 10 / Class 20 selectable
- Trip indication + reset

Timer

- Star-Delta timer adjustable: 0–20 sec.

Control & Logic System
Control Type

- PLC-based or relay-logic (specify)

Recommended PLC (for modern installations)

- 24 VDC supply
- Minimum 8 Digital Inputs
- Minimum 6 Digital Outputs
- Expansion capability
- Ethernet/Modbus communication

Typical Control Functions

- Auto / Manual operation
- Remote start/stop
- Interlock inputs (tank level, pressure switch, flow switch etc.)
- Emergency stop
- Auto restart after power failure (selectable)

- Run hour meter

Human Machine Interface (Front Door)
Selector Switches

- Auto / Manual selector
- Local / Remote selector
- Reset pushbutton

Push Buttons

- Start (Green)
- Stop (Red)
- Emergency Stop (Mushroom)

Indication Lamps (LED type)

Lamp	Colour
Power ON	White
Motor Running	Green
Motor Trip	Red
Auto Mode	Blue
Fault Alarm	Amber

Metering (Digital Multifunction Meter)

- Voltage (L-L, L-N)
- Current per phase
- kW, kWh
- Frequency
- Power factor

Enclosure Specification

Feature	Requirement
Type	Mild Steel / Powder coated
Protection	IP54 indoor / IP65 outdoor
Thickness	≥ 1.6 mm
Mounting	Wall or floor standing
Cable Entry	Bottom gland plate
Earthing	Copper earth bar

Finish:
RAL 7035 light grey powder coating.

Wiring & Accessories

- Internal wiring: FRLS copper wires
- Colour coding as per IEC standards
- Ferruled wires and numbered terminals
- DIN rail mounted components
- Terminal blocks for:
    - Motor cables
    - Remote signals
    - Spare terminals (20% spare)

Safety Requirements

Panel must include:

- Door interlock with MCCB
- Proper earthing system
- Danger labels and mimic diagram
- Short-circuit and overload protection
- Emergency stop circuit hardwired

Testing & Documentation

Factory Acceptance Tests:

- Insulation resistance test
- Functional testing
- Interlock verification
- Protection trip test

Documentation to supply:

- GA drawing
- Schematic wiring diagram
- Terminal diagram
- Operation & maintenance manual