This view is from behind the reception desk facing the central seating area.

BANCROFT ARCHITECTS + ENGINEERS

A centralized view of the seating area.

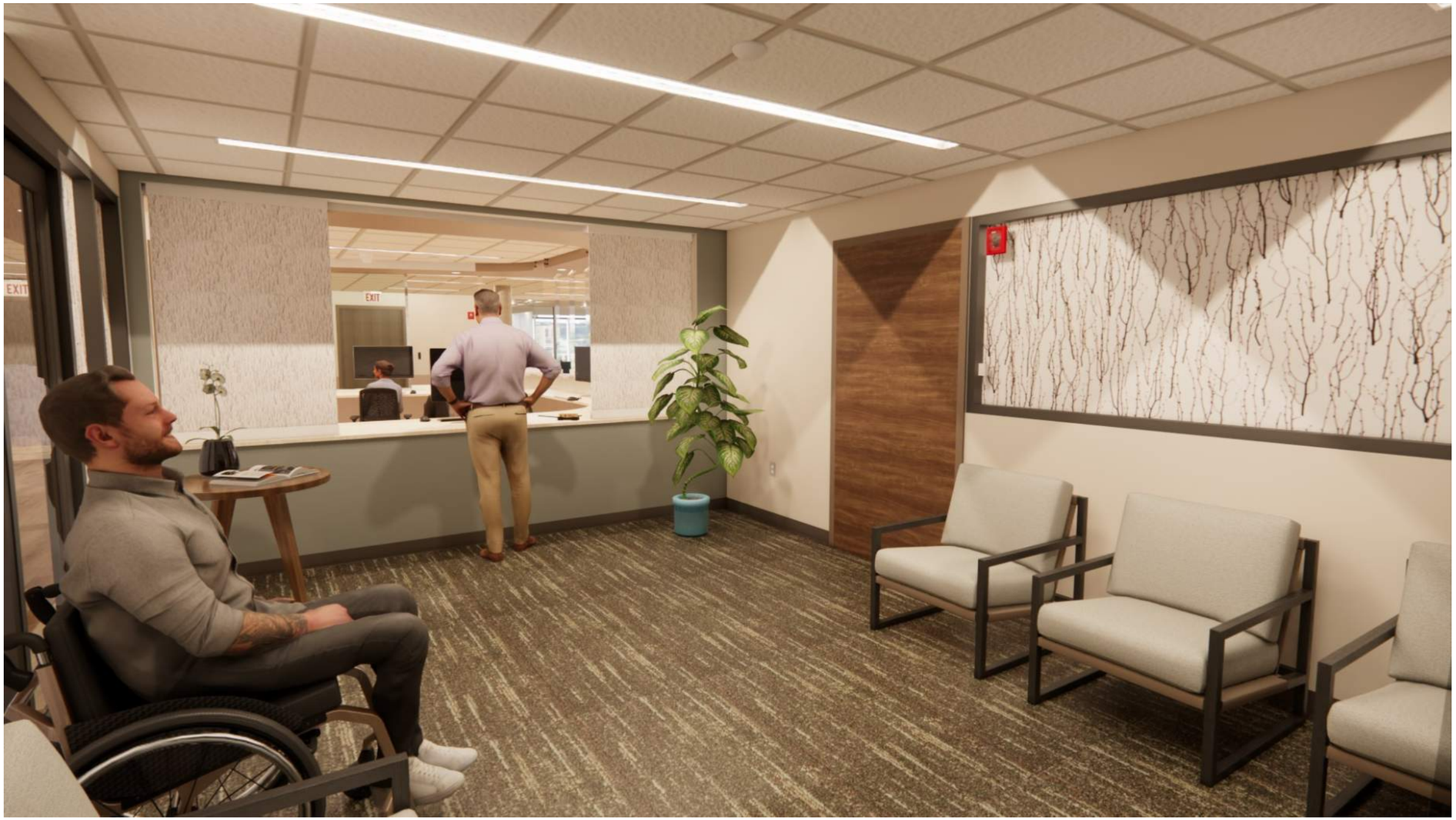

From the corridor, the patient enters the waiting room where they can sign in and wait to be taken back to the clinic. This view is facing the reception desk from the corner of the room.

This view is of the opposite side of the room showing additional seating and a set of bookshelves.

From the waiting room the patient will enter the Primary Care Corridor. This view is looking down the corridor from the entry from reception.

BANCROFT ARCHITECTS + ENGINEERS

This view is looking down the corridor towards the entrance from the end of the corridor.

The patient enters the exam room where the patient and Doctor will have an intimate and personal interaction.

BANCROFT ARCHITECTS + ENGINEERS

4 Primary Care Clinic: Typical Exam Room

This view is looking towards the entry from the corner of the room.

The patient will continue down the main corridor where they can enter into easy street or the dining room. This view is facing the opposite end of the corridor towards easy street.

BANCROFT ARCHITECTS + ENGINEERS

5 Primary Care Clinic: Typical Exam Room

This view is entering into the dining room from the corridor. The patient is greeted with a bustling, enjoyable environment with an adjustable view into Easy Street.

This view is from the corner of the Dining Room looking towards Easy Street. In this view, the adjustable walls to Easy Street are shown open.

BANCROFT ARCHITECTS + ENGINEERS

This view is the same, but showing the adjustable walls to Easy Street shut.

From the dining room, the patient enters into Easy Street where they are having an afternoon of watching shows and enjoying family.

BANCROFT ARCHITECTS + ENGINEERS

4 First Floor Dining Entering Easy Street

This view is looking from the corner of Easy Street looking towards the dining room. Both of the adjustable walls are shown as closed.

This view is from one of the tables facing the projection screen where an episode of MASH is playing.

This view is looking up at the baffles from the corner of the room.

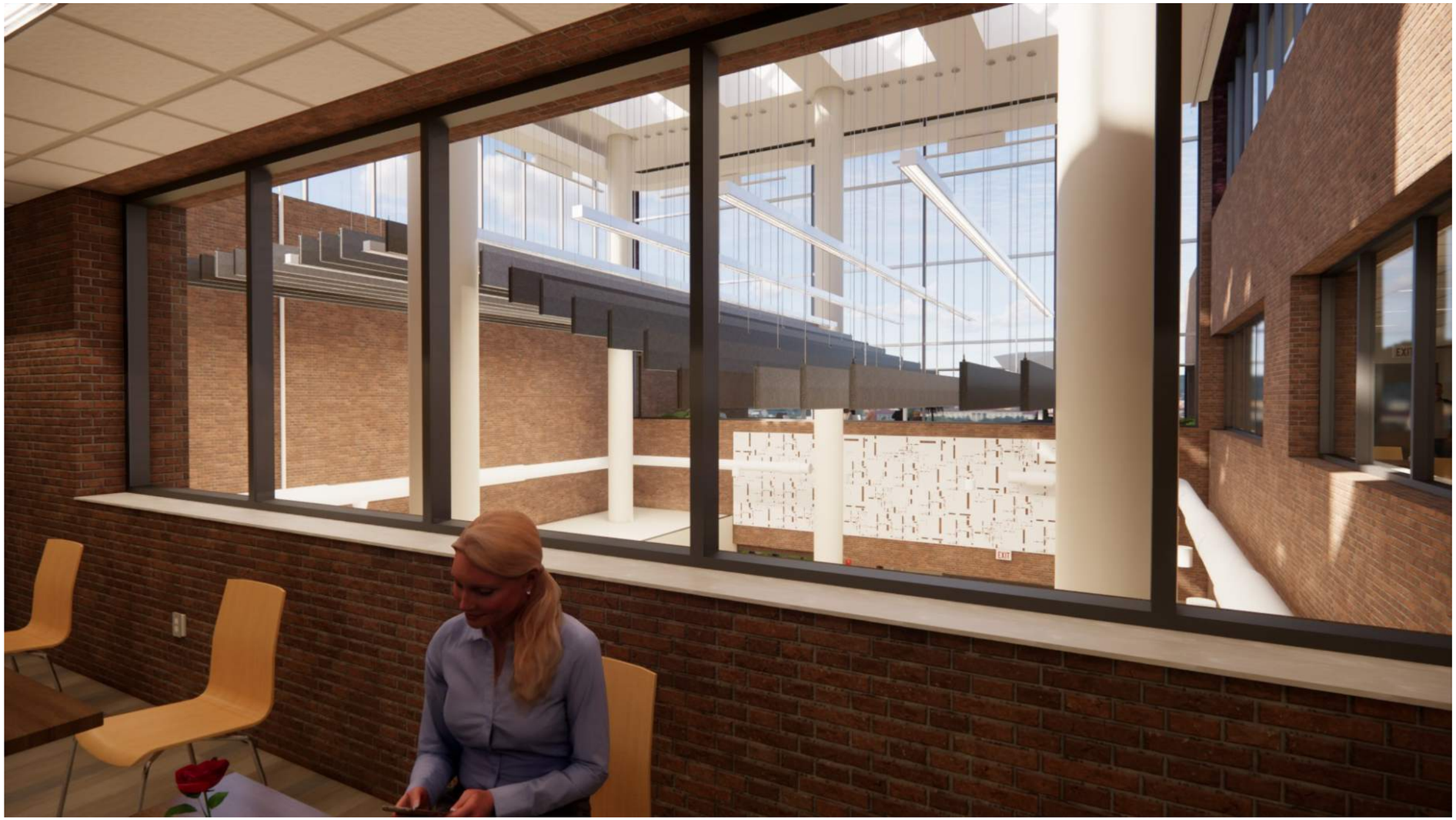

From the second floor dining room you can see the flow of the baffles dropping into Easy Street.

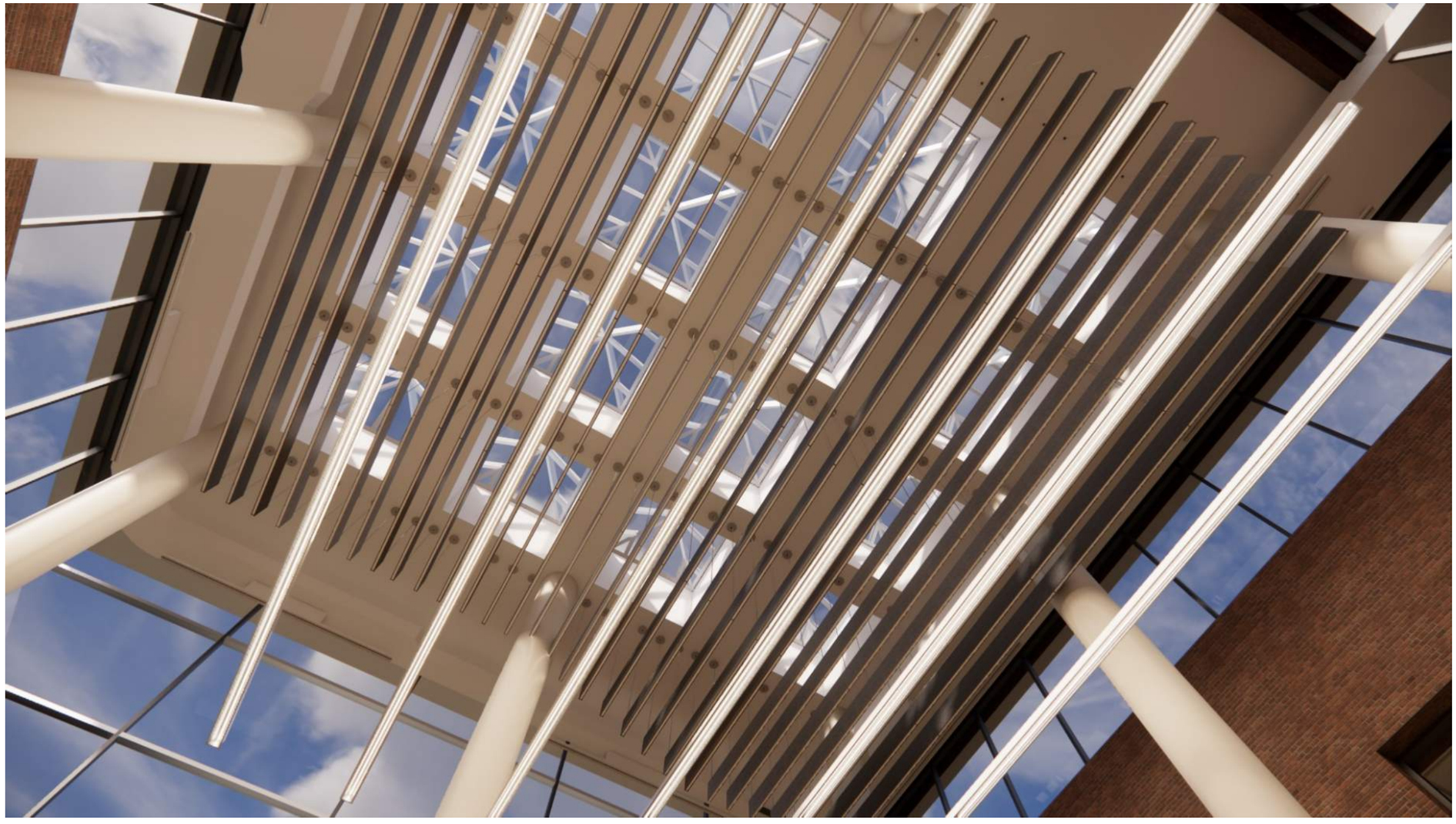

A view of th ebaffled looking directly up.

The patient can also enjoy the second floor dining room which has a similar arrangement to the first floor. This view is from the entrance looking towards the back.

BANCROFT ARCHITECTS + ENGINEERS

5 Second Floor Dining

This view is looking from the corner of the room out towards the center.

The patient may also enjoy the inviting patio area next to the second floor dining area. This view is facing the entrance from the corner of the patio where residents and their families can enjoy each others company

5 Second Floor Patio

This view is looking from the opposite corner looking towards the second floor dining room and Easy Street.

Sally-port entering into Dementia Unit

The patient is entering one of the Dementia Unit entries. We are looking at the edge of the nurse station to the center gathering area. Here, people are enjoying snacks and good conversation.

BANCROFT ARCHITECTS + ENGINEERS

This view is looking from behind the nurse station where a nurse and Doctor are catching up on paperwork. This view also shows the nutrition area where residents have access to drinks and a microwave.

Entering into one of the unit entries, this view is looking into the unit form the side of the nurse station.

This is the opposite corridor. Memory boxes line the walls giving resident a reminder to which room is there's. Accent strips line the corridors assisting with wayfinding throughout the facility.

Entering the Resident room, the resident is greeted with a personalized shelf, cabinet and a soothing fractal design wall. Each resident room has its own private restroom and shower.

BANCROFT ARCHITECTS + ENGINEERS

Looking from the opposite side of the room, the resident has an attractive wardrobe, along with a matching sink and bedside table.

Entering into the patient room, this view shows the bed area and a chair where the guest or family member can sit.

This view is looking from the corner of the room towards the entry and private bathroom.

Entering into the room you see the view outside, patient bed, TV and chair for a family member or guest.

BANCROFT ARCHITECTS + ENGINEERS

Looking from the opposite side of the room towards the private bathroom and entry.

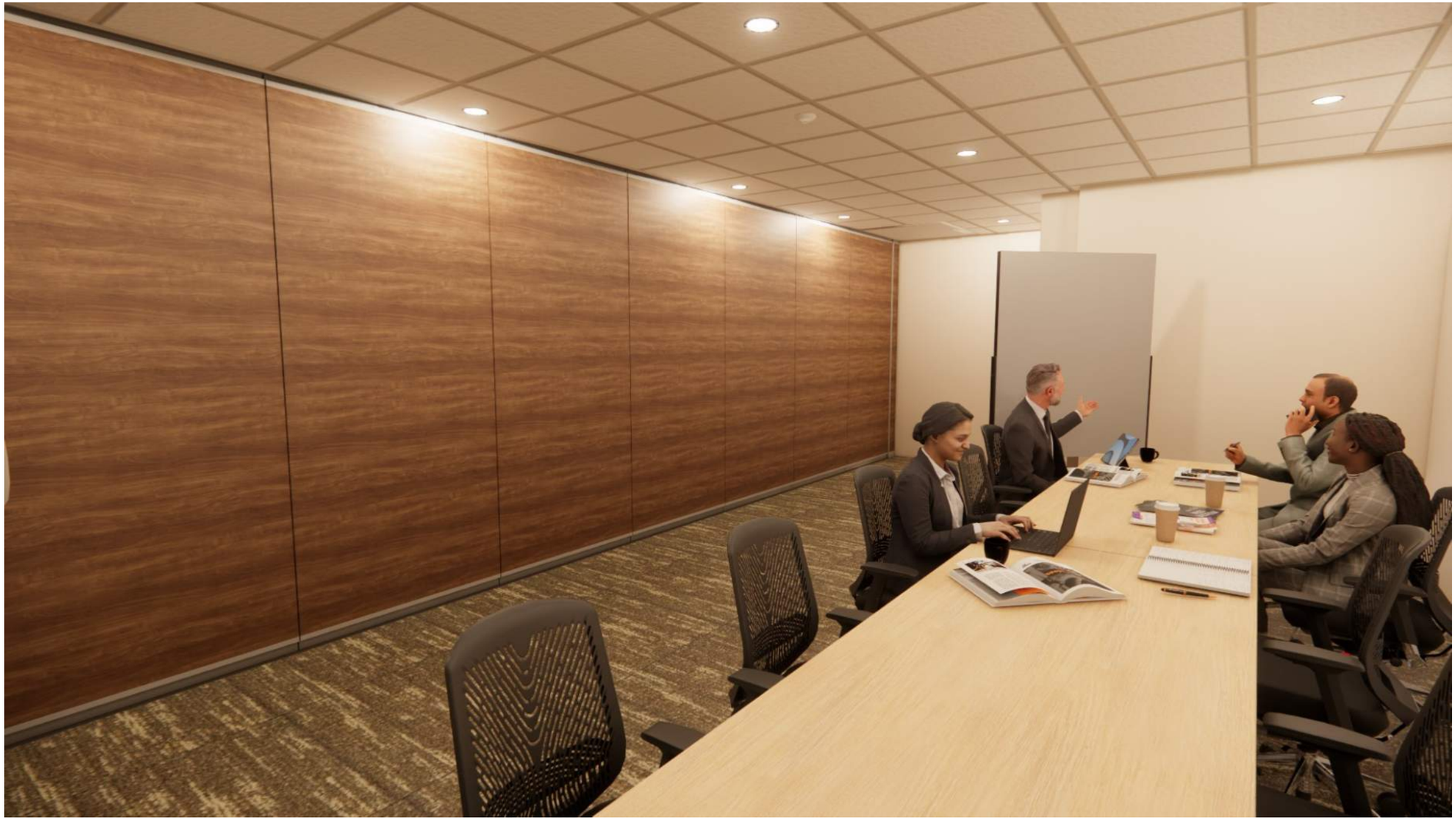

This view is entering into the conference room. Here, the foldable partition is shown as outstretched and two meetings can take place at once.

This view shows the wall folded and gives a perspective of the other side of the room.

Here is a view of the second floor family room looking towards the entry.

This view is looking in from the entry. Esidents can watch TV with their family or even do crafts. They can also enjoy a cup of coffee or a snack from the fridge.

BANCROFT ARCHITECTS + ENGINEERS

6

MEP

- Mechanical
- Electrical
- Plumbing
- Fire Protection

DESIGN CRITERIA

The design of the HVAC systems shall be in accordance with the following codes and standards:

- VA Directives, Space Planning Criteria, Design Manuals, Master Specifications, VA National CAD Standard Application Guide, and other Guidance on the Technical Information Library (TIL). (http://www.cfm.va.gov/til/)
- International Building Code 2021
- International Mechanical Code 2021
- NFPA 101 Life Safety Code 2021
- ASHRAE Standard 170. Ventilation of Health Care Facilities—2017
- ASHRAE Standard 90.1—2019
- ASHRAE Standard 62.1—2019
- Applicable National Fire Protection Association (NFPA) codes
- Sheet Metal and Air Conditioning Contractors Association (SMACNA)
- Underwriter's Laboratories (UL)
- VA HVAC Design Manual—2022

DESIGN WEATHER AND ROOM CONDITIONS

Outdoor design weather conditions are based on engineering Climate data from VA HVAC Design Manual for the Hines location from weather station at Chicago Midway AP. Winter design condition is the 99.6% occurrence design value. Summer design condition is the 0.4% occurrence design value. Indoor design conditions are based on VA HVAC Design Manual 2022.

Outdoor Design Conditions:

Winter: -6°F (db)

Summer: 91.5°F (db), 76.4°F (wb)

Indoor Design Conditions

Summer: 75°Fdb +/-2°F

Winter: 70°F +/-2°F

Ventilation rates shall be in accordance with the VA HVAC Design Manual 2022 and 2018 IMC.

CALCULATIONS

Building HVAC loads are calculated using commercial load calculation computer program (HAP version 5.11) capable of modeling systems over complete 8760-hour annual period, using ASHRAE load calculation techniques.

The following table notes the individual room type design conditions per the VA 2022 HVAC Design Manual.

Room Type	CLD ° F	HTG ° F	%RH MAX	%RH MIN	MIN TO-TAL ACH	MIN OA ACH	ROOM AIR	ROOM AIR BAL-ANCE
CLC CONFERENCE	75	70	60	30	4	2	RETURN	(0)
CLC MEDIA	75	70	60	30	6	2	RETURN	(0)
CLC CORRIDOR	75	70	60	30	4	2	RETURN	(+)
CLC DINING	75	70	60	30	4	2	RETURN	(-)
CLC OFFICE	75	70	60	30	4	2	RETURN	(0)
CLC EXAM	75	70	60	30	4	2	RETURN	(0)
CLC LOBBY	75	70	60	20	6	NA	EXHAUST	(+)
CLC MULTI PUR-POSE	75	70	60	30	4	2	RETURN	(0)
MHI DEMENTIA PR	75	70	60	30	6	2	RETURN	(0)
MHI TOLIET	NA	68	NA	30	10	NA	EXHAUST	(--)
MHI NURSE STA.	75	70	60	30	4	2	RETURN	(0)

Existing Conditions/Demolition

The existing 4 AHU's inside the building proper will be used for the building proper (installed under Project No. 578-12-151, Bancroft No. 13-114) and investigation into the integration and utilization of the existing to remain roof top units that provide heating and cooling for the enclosed atrium areas, will be done.
Noting that at site visit we were told the roof top AHU for 1A43 (EasyStreet) was turned off (room not in use) but functioned well, and the AHU units for the 1A80 & 1A81 functioned but the chiller unit was bad. These areas are able to keep comfortable since they are open to corridors and have no exterior exposure.

New work

Cooling and heating mechanical systems (VAV terminal units) for the renovated individual rooms and areas, including ductwork & grills, piping, controls to serve the project areas will be demolished back to main trunks and updated with new equipment to handle the new room assignments.

NEW WORK - HVAC

General

The general scope of this project is to renovate areas of building 217 for better VA utilization.

SOW requirements and location breakdown:

1. Easy Street (location #1) 1A43,1A108-HVAC work for new renovation of the area. Integration of existing to remain roof top AHU's for the atrium area to the newly planned space.
2. Patient Safety Cameras. No longer in scope.
3. Entrance lobby (location #2) RCC108R,1A3-HVAC work for new renovation.
4. Dining (locations #3,4) 1A118, 2A26-HVAC work for new renovation.
5. Lounge/Library/Waiting area (location #5) 1B80 and/or 1B81 (location #18). No longer in scope. Conference room (location #20) 2A12,2A13-HVAC work for new renovation.
6. Bariatric Patient rooms (locations #6,7,8) 1B149,1C149,2C49-HVAC work for new renovation.
7. Exterior Courtyard (location #10) 2 floor-No HVAC work to be undertaken.
8. Dementia Unit (location #5) 12 rooms w/toilet, Nurse Station (in atrium), and Corridors-HVAC work for new renovation and Integration of existing to remain roof top AHU's for the atrium area.
9. High Fall Risk Patient rooms (locations#11,12,13,14) 1C104,1C178,2C4,2C78-HVAC work for new renovation.
10. Storage Areas (location #15) 2B41, 2B78-HVAC work for new renovation.
11. Playground Demolition (location #16) No HVAC work to be undertaken.
12. Smoke Shelter Demolition (location #17) No HVAC work to be undertaken.
13. (location #18) 1B81-No longer in scope. (location #19) 1B178-HVAC work for new renovation .
14. (location-all) Flooring. No HVAC work to be undertaken.
15. New Requirement-Clinic exam rooms (location marked clinic relocation) 6 rooms w/sink 1A104, 1A105, 1A106, 1A107, 1A109 (divide into 2 rooms)-HVAC work for new renovation.

APPLICABLE CODES

The design of the Electrical Systems shall be in accordance with the latest published edition of the following codes and standards:

- NFPA 101 Life Safety Code, 2021
- NFPA 70 National Electric Code, 2023
- NFPA 72 National Fire Alarm & Signaling Code, 2022
- International Building Code (IBC), 2021 (Only when specifically referenced in VA Design Documents).
- Veterans Affairs Electrical Design Manual (PG-18-10)
- Veterans Affairs Master Specifications (PG-18-1)
- Veterans Affairs Design Guides (PG-18-12)
- Standard for Healthcare Facilities – NFPA-99
- Underwriter's Laboratories (UL)
- National Electric Manufactures Association (NEMA)
- Institute of Electrical and Electronics Engineers (IEEE)
- American National Standards Institute (ANSI)
- ASTM International (Formerly American Society for Testing and Materials)
- Occupational Safety and Health Hazards (OSHA)
- American Institute of Steel Construction (AISC)
- Illuminating Engineering Society of North America (IESNA)
- ASHRAE Standard 90.1
- OEHRM Requirements Specification, June 5, 2019, Ver. 1
- OEHRM Site Infrastructure and End User Device (EUD) Requirements, April 15, 2021, Ver. 2.0
- OIT Infrastructure Standards for Communications Spaces, Ver. 3.2, July 1, 2021
- Infrastructure Standard for Telecommunications Spaces (ISTS), Ver. 4, Jan. 1, 2023

DEMOLITION

Receptacles on walls that will be removed or modified will be removed to source along with wiring and supports. Where walls remain, boxes and conduits will be reused as much as possible.

Lighting fixtures, ballasts, fittings, wiring and conduits will be removed to source. Where conduits can be reused, they will be saved.

Local electrical distribution panels and breakers will be assessed for remaining life. If replacements are required, design will be to the latest NEC Code.

Existing fire alarm, nurse call, access controls, and surveillance camera systems in the areas of demolition will be removed and disconnected back to the source.

NEW ELECTRICAL WORK

- New electrical will be designed to the 2023 NEC Code.
- Receptacles, Faceplates, wiring and conduits will be new to the source. If Branch circuits for the receptacles follow an existing conduit run, that conduit will be reused.
- Lighting fixtures will be new LED, wiring and conduits will be new to the source.
- If electrical distribution panels and breakers need replacement, they will be designed to the 2023 NEC Code, and will be provided with 30% Spare circuits. Existing panels will be reused and new panels will be provided where additional circuit capacity is needed.
- The new electrical load will be reviewed against the capacity of the electrical panels. If design capacity is exceeded, the upstream electrical equipment and feeders will be upgraded.
- Access controls and surveillance camera systems, A/V, PAS, TV media, and nurse call systems will be added to the newly renovated areas.

Receptacle Requirements:

• All receptacles will be of hospital grade. Selected receptacles are equipped with ground fault current interrupters at code required locations. Selected receptacles will be connected to critical branch.

• One (1) duplex receptacle in corridors, 25'-0" on center will be provided for cleaning purposes with dedicated circuits.

- Receptacles in dementia, bariatric, and high fall risk rooms, etc., (depending on room layout) will be provided with a minimum of four (4) outlets with one (1) outlet on each wall.

• Ground fault protection will be provided for outlets within 6'-0" of a sink edge and other wet locations. Electrical outlets will be individually ground fault (GFCI) protected.

• General purpose receptacles will be connected to 20 amp branch circuits. (maximum 6 duplex receptacles per circuit and maximum 4 quadruplex receptacles per circuit).

Lighting:

• Lighting system will be designed to comply with the ANSI/ASHRAE/IESNA 90.1. All the light fixtures will be energy saving LED type with dimmable driver where applicable. Space specific lighting level will be provided as per the Lighting Design Manual (LDM) and The Illuminating Engineering Society of North America (IESNA).

- Lighting fixtures will be selected for each specific area based on the occupancy. In order to maximize energy efficiency, occupancy sensors will be considered in corridors, lobbies, and exam rooms etc.

Emergency Lighting System:

LED type exit marker signs will be provided throughout facility to identify pathways to and doors of egress.

Lighting Control:

Dual technology IR/Ultrasonic occupant sensor and dimming controls will be provided for common areas..

Basic Electrical Material and Methods:

The following guidelines for the electrical equipment and materials selection will be used:

Conductors will be copper with 600V, type THHN/THWN insulation.

All materials will be new; VA approved and complies with local code requirements.

Fire Alarm System:

- New fire alarm devices will be added to the newly renovated areas and tied into the existing system.

Design work will be in accordance with current (as of Notice to Proceed date), VA Design Guides, VA Manuals, FGI 2018, NFPA, OSHA, and all other applicable standards including, but not limited to:

- U.S Department of Veterans Affairs Office of Electronic Health Record Modernization OEHRM Site Infrastructure and End User Devices (EUD) Requirements Version 2.0 April 15, 2021
- Reference ISTS, Version 4.0.
- U.S. Department of Veterans Affairs Office of Construction & Facilities Management Telecommunications and Special Telecommunications Systems Design Manual, February 2016
- U.S. Department of Veterans Affairs Office of Construction & Facilities Management Standards Alert 003C2B-SA-017 R01b, August 1, 2021
- VA Office of Construction & Facilities Management / Physical Security and Resiliency Design Manual— October 1, 2020 / Revised April 1, 2021
- SOCAMES 6 Design Alerts 1-12.
- BICSI 568, Standard for Installing Commercial Building Telecommunications Cabling
- BICSI N1-2019, Installation Practices for Telecommunications and ICT Cabling and Related Cabling Infrastructure.
- TIA TBS-162-A, Telecommunication Cabling Guidelines for Wireless Access Points.
- ANSI/NECA/BICSI 607-D, Generic Telecommunications Bonding and Grounding (Earthing) for Customer Premises July 2019.
- 802.3at-2009 - IEEE Standard for Information Technology - Telecommunications And Information Exchange Between Systems - Local And Metropolitan Area Networks - Specific Requirements Part 3: Carrier Sense Multiple Access With Collision Detection (CSMA/CD) Access Method And Physical Layer.
- 802.11ac-2013 - IEEE Standard for Information technology--Telecommunications and information exchange between systems–Local and metropolitan area networks--Specific requirements--Part 11: Wireless LAN Medium Access Control (MAC) and Physical Layer (PHY) Specifications--Amendment 4: Enhancements for Very High Throughput for Operation in Bands below 6 GHz.
- ISO/IEC 61935-1, Specification for the testing of balanced and coaxial information technology cabling – Part 1: Installed balanced cabling as specified in ISO/IEC 11801-1 and related standards, Revision 5.0, September 2019.
- International Organization for Standardization (ISO):
    - ISO/IEC 14763-2, Information technology – Implementation and operation of customer premises cabling – Part 2: Planning and installation.
    - ISO/IEC 30129, Information Technology – Telecommunications bonding networks for buildings and other structures.
- National Fire Protection Association (NFPA) - NFPA 70®, National Electrical Code® (NEC®)

INFORMATION TECHNOLOGY — DESIGN CRITERIA

- Telecommunication Industry Association (TIA):
- TIA-455-78-C;IEC-60793-1-40 Optical Fibers - Part 1-40: Measurement Methods and Test Procedures- Attenuation.
- TIA-526-7-A; Measurement of Optical Power Loss of Installed Single-Mode Fiber Cable Plant, Adoption of IEC 61280-4-2 edition 2: Fiber-Optic Communications Subsystem Test Procedures – Part 4-2: Installed Cable Plant – Single-Mode Attenuation and Optical Return Loss Measurement.
- TIA-526-14-C, Optical Power Loss Measurement of Installed Multimode Fiber Cable Plant; Modification of IEC 61280-4-1 edition 2, Fiber-Optic Communications Subsystem Test Procedures- Part 4-1: Installed Cable Plant-Multimode Attenuation Measurement .
- TIA-568.0-E, Generic Telecommunications Cabling For Customer Premises (Also See TIA-568-D.1, TIA-568-C.2, TIA-568-C.3, and TIA-568 Set).
- TIA-568.2-D, Balanced Twisted-Pair Telecommunications Cabling and Components Standards.
- TIA-569-E, Telecommunications Pathways and Spaces.
- TIA-606-D, Administration Standard for Telecommunications Infrastructure.
- TIA-607-D, Generic Telecommunications Bonding and Grounding (Earthing) for Customer Premises.
- TIA-1152-A, Requirements for Field Test Instruments and Measurements for Balanced Twisted-Pair Cabling.

Demolition:

- All ICT Systems will be removed back to sources.
- ICT components; i.e. Nurse Call, Code Blue, Wayfinding, WIFI, Security, etc will be “Bagged-and-Tagged”.
- BAE will meet with ICT System owners to determine any design changes.

New ICT Work:

- New network cabling will meet EHRM standards,
- New network cabling will be directed into the EHRM telecommunications Room,
- Analog phones will be replaced with Voice over Internet (VOIP) phones,
- Wiring for any old phones telephones that remain will be replaced with Cat 3 cables.
- Data receptacles in rooms will be replaced with two data ports and one voice.
- Data receptacles in “business” locations will be replaced with three data and one voice.

SUMMARY

Design Criteria

The design of the plumbing system will be in accordance with the latest editions of the following codes and standards:

- International Plumbing Code
- Underwriters Laboratory, Inc.
- American National Standards Institute (ANSI)
- American Society for Testing Materials (ASTM)
- American Water Works Association (AWWA)
- Cast-Iron Soil Pipe Institute (CISPI)
- VA Plumbing Design Manual Dated May 2018
- VA Master Specifications (H-08-1)
- VA Standard Details (H-08-4)

General Plumbing

The scope of work consists of the following:

Plumbing Requirement 1 - Easy Street

Disconnect and remove existing wall hung, manual flush valve , urinals with manual flush valve and wall hung lavatories with single gooseneck faucet and TMV in men's and women's toilet rooms. Extend new CW, HW, HWR, San and Vent piping and connect to new fixtures.

Disconnect and remove existing wall hung utility sink with associated faucet and wall mounted electric water cooler in Recreation room.

Disconnect and remove existing counter top double basin sink and associated faucet, wall mounted electric water cooler, tank type floor mounted toilet and wall mounted lavatory with associated hands free faucet in Rehabilitation Therapy Rooms.

Plumbing Requirement 3 - Entrance Lobby and Vestibule

Install new drop in sink with single gooseneck manual faucet hand wash sink in new exam rooms

Plumbing Requirement 4 - Dining Rooms

Disconnect and remove existing plumbing fixtures and installing new fixtures. Extend new CW, HW, HWR, San and Vent piping and connect to new fixtures.

Plumbing Requirement 5 - Lounge

No Plumbing scope.

Plumbing Requirement 6 - Bariatric Patient Rooms

Disconnect and remove existing plumbing fixtures and install new bariatric toilets, lavatories, showers and hand sinks in new bariatric patient rooms. Extend and connect new properly sized CW, HW, San and Vent piping to new location of new fixtures.

Plumbing Requirement 7 - Second floor exterior courtyard

Disconnect existing deck drain and replace with new deck area drain.

Plumbing Requirement 8 - Dementia Unit

Disconnect and remove existing plumbing fixtures and install new toilets, lavatories, showers and hand sinks in new dementia patient rooms. Extend and connect new properly sized CW, HW, San and Vent piping to new location of fixtures.

Plumbing Requirement 9 - High Fall-Risk Patient Rooms - Disconnect and remove existing fixtures and installing new toilet, lavatory and hand sinks in high fall risk patient rooms. Extend and connect new properly sized CW, HW, San and Vent piping to new location of fixtures.

Plumbing Requirement 10 - Equipment Storage Room - Disconnect and remove existing sink and install new drop sink with manual goosenec faucet in equipment storage rooms.

Plumbing Requirement 11 - Playground and Pavilion

No Plumbing scope.

Plumbing Requirement 12 - Smoke Shelter

No Plumbing scope.

Plumbing Requirement 13 - Additional areas

No Plumbing scope.

Plumbing Demolition

Existing plumbing fixtures: Existing Easy Street, Patient, Dementia, and High-Fall Risk Rooms

- Disconnect and remove all existing wall hung water closets with bed pan washer and manual flush valves.
- Disconnect and remove all wall hung lavatory with single goose neck hands free faucet, TMV and associated hangers.
- Disconnect and remove existing handheld shower and control valves.
- Disconnect and remove all existing wall hung hand wash lavatory with single goose neck hands free faucet TMV and associated hangers.
- Disconnect and remove existing wall hung electric water cooler and associated hangers.
- Disconnect and remove existing wall hung utility sink and associated faucet and hangers.

Existing Sanitary and Vent: Existing Patient, Dementia, and High-Fall Risk Rooms

- Saw cut floor on first floor rooms as necessary to remove existing shower drains. Cut sanitary piping serving drains back to main. Cut and remove existing vent piping and cut back to main.

Existing Domestic Water: Existing Patient, Dementia, and High-Fall Risk Rooms

- Cut back all existing CW, HW and HWR piping serving existing fixtures back to main.

Existing area drains: Second floor exterior courtyard

- Disconnect and remove existing exterior courtyard area drains.

Plumbing New Work

Install new plumbing fixtures in new areas of scope. Extend all new San, Vent, CW, HW, HWR to new fixtures in new areas of scope.

New Plumbing fixtures: Easy street, Patient, Dementia, High-Fall Risks and Exam rooms.

- Water Closet (Private toilet rooms) - Install wall hung toilets (ADA) with bed pan washers lugs and manual specialty bedpan washer flush valves and associated hangers.
- New Lavatories (Private toilets) - Install oval, vitreous china, undermount lavatory and single, gooseneck, handsfree battery powered programmable faucet with associated hangers and TMV.
- New hand held showers (Private toilets) - Install new hand held showers on slide rails with thermostatic control valves.
- New floor drains and shower drains (Private toilets) - Install new shower floor drains and linear drains for the shower stall.
- New hand wash sink (Private Patient Rooms) - install new hand wash sink with single gooseneck handsfree, battery powered programmable faucet and associated hangers.
- New Water Closet (Public toilet rooms) - Install wall hung toilets with manual flush valves and associated hangers.

SUMMARY

DESIGN CRITERIA

The design of the Fire Protection Systems shall be in accordance with the following codes and standards:

Building Codes:

- International Building Code 2021

Veterans Administration:

- Veterans Administration Fire Protection Design Manual (8th Edition) June 1, 2021
- Veterans Administration Master Specifications
- Veterans Administration Standard Details

National Fire Protection Association (NFPA) (Current Published Editions)

- Pamphlet #13 – 2022: Standard for the Installation of Sprinkler Systems
- Pamphlet #25 – 2020: Standard for the Inspection, Testing and Maintenance of Water-Based Fire Protection Systems
- Pamphlet #99 – 2021: Health Care Facilities Code
- Pamphlet #101 – 2021: Life Safety Code

Underwriter's Laboratories (UL)

National electric Manufacturers Association (NEMA)

Tests by independent agencies whose classifications and requirements have general acceptance as regulatory:

- Underwriters Laboratories, Inc. (UL)
- Factory Mutual
- Owner's Insurance Company

BANCROFT ARCHITECTS + ENGINEERS

GENERAL

The existing fire protection systems are served by the campus fire protection system.

A project / site specific flow test, will be required to establish a Basis of Design to be presented to the successful Fire Protection Contractor. In lieu of this for design purposes, the existing "Fire Protection Placard" at the base of the risers serving the designated project areas or the most recent annual "Fire Pump Test" Results should be provided to pursue the designs.

PROJECT SCOPE

The existing sprinkler heads in all room requirements shall be removed and replaced with new sprinkle head per new ceiling layout.

SCOPE OF DEMOLITION

Fire Protection Coverage during Construction:

- Fire Protection Contractor shall follow direction from the COR as the best way to maintain fire protection coverage during construction in the specific area. A plan scheduling this information shall be documented and posted to the Project Team and Contractor.
- Where temporary coverage is not feasible, Fire Protection Contractor shall provide a manual watch during shutdown periods.
- In areas where only one or two a/s heads are affected, contractor shall schedule system shut down, demolition, installation, and reactivation within one working day, with a fire watch included as part of the team.
- During construction automatic sprinkler heads shall be repositioned to provide adequate temporary protection. This may include reversing the 90 degree elbow serving pendant heads and installing upright heads. NOTE: Existing heads shall never be re-used. Each time an existing a/s head is removed from service, it shall be disposed of and a new head of matching type or the type required shall be supplied and installed.
- Demolition shall include the removal of existing a/s heads and piping with caps or plugs installed on the branch piping at a point outside the designated area.
- All shutdowns and interferences with service shall be approved by the COR.

- New Lavatories (Public toilets) - Install wall hung toilets (ADA) and single, gooseneck, manual faucet with associated hangers and TMV.
- New Urinals (Public toilets) - Install new wall hung toilets with manual flush valves and associated hangers.
- New wall mounted water coolers (General Location) - Install new wall mounted water coolers with bottle filler.
- New sink and faucet (General location) - Install new undermount single basin sink with manual faucet.

Sanitary and vent new work:

Extend new properly sized sanitary piping to all new fixtures. Extend new vents from fixtures and route to ceiling and reconnect to vent main.

Domestic water new work (CW, HW HWR):

Connect and extend new properly sized CW, HW and HWR piping from main and extend to new location of fixtures.

Storm piping work:

Install new area drain.

BANCROFT ARCHITECTS + ENGINEERS

A

Appendix

- Meeting Minutes

MEETING MINUTES

BANCROFT ARCHITECTS + ENGINEERS

MEETING MINUTES

August 18, 2023

Project: Renovating Portions to Building 217 (CLC)
Location: Edward Hines Jr. Hospital
VA Project: 36C5223C0071
BAE Project: 23-009
Meeting: Project Kick -Off Meeting

Project Contacts:

Name	Company	Phone	Email
Juan Gaytan	VA CO	224-610-3644	Juan.Gaytan@va.gov
Aaron Walsh	VA COR	708-202-8397 x21152	Aaron.Walsh@va.gov
Mary Tucker	VA Alt. COR & VA Interiors		
Kaylee Uttech	VA Engineering ID		
Marty Jensen	VA Engergy Manager		
Salman Ali	VA		
Binu Polakkattil	VA		
Peter Mathis	VA		
Vickie Bastin	Bancroft A+E	224-875-6892	vbastin@bancroft-ae.com
Dennis Mika	Bancroft A+E		dmika@bancroft-ae.com
Connor Rollins	Bancroft A+E		

Meeting Minutes:

1. CO read through the Notice to Proceed and AE Checklist
2. Dennis presented slides to discuss specific spaces.
   a. Lobby, Easy Street, & Dining Area: Dr.Ali stated flexibilty of the space is important especially with Chicago's weather. The VA needs a space for group activities to accommodate up to 200 people.
      i. Thanksgiving Dinner: Room for up to 100 people to gather for a meal
      ii. Bingo Hall: VA stuggles with attendance when activites are offered due to space limitations.
      iii. Special Occansion Events: Birthday Parties & Family/ Visitor Events
      iv. VA Staff Meetings/ Training: approx. 420 employees. Currently there are no space large enough to accommodate training seminairs or meetings. Currently conditions only can accommodate 20 team members at one time.

   b. Dementia Unit: BAE inquired what level of services is the VA looking for?
      i. Per the VA they are looking for a locked unit. Currently patience are able to wonder and get lost. VA currently uses Wonder Guard to assist in managing monitoring Veterans location.
      ii. VA needs 3-4 rooms for shorter stays (up to a week)
      iii. Video camera will be needed
      iv. Unit does not need to be self sustaining, VA stated they can share support services.
      v. BAE asked about space needed for group activites? Per VA group space is not essential as the would have a staff member escort Dementia Patients to activites and other areas if needed.
   c. Bariatric Rooms & High Fall Rooms: BAE asked why the rooms were selected for each requirement.
      i. Rooms selected for high fall are located in closer proximity to the nurse stations. Which would help with response time if a patient required assistance.
      ii. VA mentioned that they are flexable with room selections for these requirements but it is important not to reduce the bed count of approx. 156.
      iii. BAE requested if the VA could provide a current bed utilization on which rooms were in use and which were singles and which rooms had double occupancy.
3. Walk Through Notes: VA and BAE met in 217 to walk through the spaces and continue disucssion on the a few of the requirment in the SOW.
   a. VA showed BAE the original enterance location and called out there is some roof leaks.
   b. BAE orginally thought the Pavilion was to be demo'd. VA would have to confirm as this space is highly used and even more now that the courtyard is closed.
   c. VA would like to see the reception desk moved closer to the front entrance. VA mentioned reception desk would only need space to accommodate one (1) person.
   d. The existing public toilets could be considered as part of the front door renovation.
   e. Easy Street: AHU is not providing sufficient air at times the space can get warm. VA suggested that window tint might be helpful. The space was originally outdoor space that was enclosed. VA called out that the sanitary manholes can not be covered.
   f. Dementia unit: This was the main point of discussion during the walk through. BAE & VA walked areas to determine which space would better facilitate the unit. VA would need to discuss more internally to weigh the pros & cons of each space. VA will provide BAE with notes from previous meeting that help flush out the groups thoughts. As census increases flexibility for future growth should be a consideration in locating the unit.

End of Meeting Notes

3300 Dundee Road | Northbrook, IL 60062
California | Connecticut | Colorado | Florida | Louisiana | Oklahoma | Pennsylvania | Virginia | Wisconsin
847.952.9362 | www.bancroft-ae.com

This summary constitutes the writer's understanding of the basic matters discussed and the conclusions reached. The participants are requested to review the following and notify Bancroft-AE, of any exceptions, in writing, within ten (10) days of receipt of these meeting minutes. In the absence of such notice, these meeting minutes will be considered accurate.

Copies: BAE Fie | VA Station
Prepared By: Vickie Bastin | BAE PM

3300 Dundee Road | Northbrook, IL 60062
California | Connecticut | Colorado | Florida | Louisiana | Oklahoma | Pennsylvania | Virginia | Wisconsin
847.952.9362 | www.bancroft-ae.com

BANCROFT ARCHITECTS + ENGINEERS

BANCROFT ARCHITECTS + ENGINEERS

MEETING MINUTES

August 30, 2023

Project: Renovating Portions to Building 217 (CLC)
Location: Edward Hines Jr. Hospital
VA Project: 36C5223C0071
BAE Project: 23-009
Meeting: Project Design Meeting

Project Contacts:

Name	Company	Phone	Email	
Juan Gayton	VA CS	224-610-3644	Juan.Gaytan@va.gov	
Aaron Walsh	VA COR	708-202-8397 x 21152	Aaron.Walsh@va.gov	
Mary Tucker	VA Alt COR/ ID			
Jean Riley	VA			
Richard Fairder	VA			
Peter Mathis	VA			
Binu Polakkattil	VA			
Mandi Evanson	VA			
Mike McCrary	VA			
Dennis Mika	Bancroft A-E			
Connor Rollins	Bancroft A-E			
Darlene Flook	Bancroft A-E			
Vickie Bastin	Bancroft A-E	847-702-1090	vbastin@bancroft-ae.com	

Meeting Minutes: The purpose of this meeting was for the VA Clinic Team to share decisions made on specific spaces outlines in the Scope of Work. VA Clinic Team and COR met last week and below is a recap of decisions that were made.

1. **Dementia Unit**
   a. VA inquired what are the design efforts to make a std room a dementia room and what are the efforts to relocate the clinics?
   b. BAE explained the largest issues/ work effort would be adding a shower to each room within the dementia unit . Std rooms can be easily converted.
      i. VA asked if showers are required for each room? BAE's point of view that it would be best practice to have showers in each patient room.
      ii. VA internally asked if a shower is required for each room, a Coleman shower located in 1B was mentioned. VA mentioned if funds permitted yes they would like a shower in each room.

   c. BAE POV this would be a scope increase, if the request is to remodel all 12 room shown below.

   d.
   e. BAE presented a layout option where the unit would be phasing. BAE would renovate the room allocated in the SOW and the remainder of the unit can be completed in another project and with the relocation of the clinics. In the end the VA will have a whole Dementia Unit as requested and BAE can keep the project within the SOW.
   f. VA COR asked Clinical Team if they are open to remodeling five (5) rooms or they would need 12 and the reason why they now need 12 rooms.
      i. VA mentioned that if there is a flu outbreak they would have space allocated for this situations.
      ii. VA mentioned the main goal is to get the best design. COR mentioned balancing the SOW and getting the users what is needed.
   g. BAE asked if there are med gas outlets in the primary care rooms? Per Jean there is no med gas in any room.

   h.

   i.
   j. VA Clinic Team thinks the above layout with Clinic Rooms moving to the front of the CLC is the best option right now for the Dementia Unit. BAE and VA looked at plan option 1A is looking more attractive and solves many of the space challenges.
      i. This would entail converting the conference room into smaller spaces for the Primary Care Clinics.
      ii. Each clinic room would require a sink to be added to the room.
      iii. VA called out the last room shown above is the laundry and it cannot be lost as it is the only location for laundry on the first floor.
      iv. VA mentioned having the clinics in the front is beneficial, Veterans don't have to walk as far.
   k. VA mentioned if NRM funds are able to be captured, COR will have to look into this and what it would take to go after NRM funding.

2. **Bariatric Rooms**
   a. 2B49 is an office, bathroom has been removed with Legionella project, 1C49 and one other larger room
   b. A total of three bariatric rooms are being requested by the Clinical Team
   c. BAE mentioned the concern of losing bed count. VA called out that yes they will be losing bed count
   d. VA identified these rooms because they are the largest rooms. COR called out that the Census will be affected overall.

3. **Old Library Space**

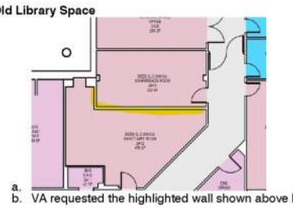

   a.
   b. VA requested the highlighted wall shown above be removed.

MEETING MINUTES

c. VA would like an accordion wall installed to have the flexibility of separate smaller meeting rooms if needed.
d. BAE will need to review if this will have additional structural implications.
e. VA requested a sink be added just in case this area was needed for a breakroom.

4. Dinning Area

a. EHRM project is planned to be in construction at the same time as this project. TR room will be planned for dining room, therefore we will lose a 10 x 10 corner. EHRM- VA will providing drawings.

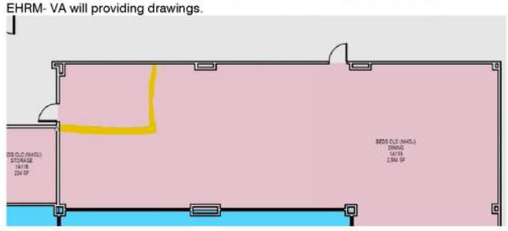

b.

5. Front Door

a. VA Mike shared concern about wheelchairs access. The north door is the prominent entrance. It was called out the west door is also used quite a bit. The VA would want to keep the chamber air floor to keep the cold air rushing in.
b. BAE will have to review the front door area in more detail.

End of Meeting Notes

This summary constitutes the writer's understanding of the basic matters discussed and the conclusions reached. The participants are requested to review the following and notify Bancroft-AE, of any exceptions, in writing, within ten (10) days of receipt of these meeting minutes. In the absence of such notice, these meeting minutes will be considered accurate.

Copies: BAE Fie | VA Station
Prepared By: Vickie Bastin | BAE PM

BANCROFT ARCHITECTS + ENGINEERS

MEETING MINUTES

October 20, 2023

Project: Renovating Portions to Building 217 (CLC)
Location: Edward Hines Jr. Hospital
VA Project: 36C5223C0071
BAE Project: 23-009
Meeting: Project Design Meeting

Project Contacts:

Name	Company	Phone	Email
Juan Gaytan *	VA CO	224-610-3644	Juan.Gaytan@va.gov
Aaron Walsh	VA COR	708-202-8397 x21152	Aaron.Walsh@va.gov
Mary Tucker	VA Alt. COR & VA Interiors		
Kaylee Uttech *	VA Engineering ID		
Marty Jensen *	VA Engergy Manager		
Salman Ali	VA		
Binu Polakkattil	VA		
Peter Mathis	VA		
Vickie Bastin	Bancroft A+E	224-875-6892	vbastin@bancroft-ae.com
Dennis Mika	Bancroft A+E		dmika@bancroft-ae.com
Connor Rollins	Bancroft A+E		rbloom@bancroft-ae.com
* notes not in attendance			

Meeting Minutes: The purpose of this meeting was for the VA Clinic Team and BAE to discuss design options and provide comments. BAE used document 23-001 _ Requirements 3LR Workshop.pdf as the basis of the workshop.

1. Bariatric Rooms (2B49, 1C49 and 2C49)

a. BAE discussed the options of inboard or outboard toilets.
   i. Inboard benefits are open space, privacy for patient and family, opening up room with more windows and cost savings. There would be no major changes to the current plumbing set up.
   ii. Outboard benefits : staff consideration with view into the room and line of sight and future flexibilty of use of room.

2. High -Risk Fall (1C104, 1C178, 2C204 and 2C278)

a. BAE explain the option of inboard or outboard toliets. Benefits are the same as Bariatric Rooms noted above.
b. BAE confirmed each room will have private showers.
c. BAE asked if lift were required or needed?
d.

3. Dementia Unit (12 Room Resident Unit)

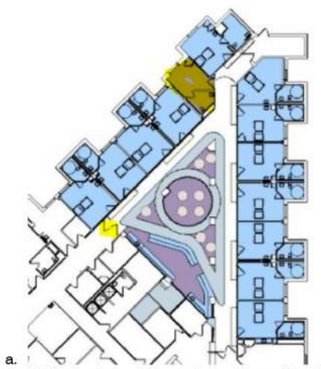

a.
b. BAE asked about the social workers office show above in yellow.
   i. VA confirmed that the room will not need to be maintained as an office.
   ii. VA suggested the room could be used as a more private family room or activity area.
c. Length of Stay: VA confirmed the intent of the unit is for short term respite stay.
   i. VISN long term care Dementia unit is in Danville.
d. Unit Doors: VA commented that Dementia Patients tend to focus on the doors and requested if they can blend in visually.
   i. BAE confirmed double doors with a vestibule is not required.
   ii. VA asked about the location of doors and BAE confirmed that location can be shifted.
e. Nurse Station: VA commented they like the idea of not having a defined nurse's station and a more integrated living area in the center area.
f. Support Space: BAE asked if there was a need to have an area for nutrition or medicine.
   i. BAE asked if there was an option to explore utilizing the space behind the proposed nurse station?
   ii. VA will have to review.

BANCROFT ARCHITECTS + ENGINEERS

g. 2nd Floor Windows: VA commented that they want to let in as much light as possible to help with the Veterans circadian rhythm.
   i. BAE proposed the use of a semi-transparent film on the window for more privacy for the Veterans in the unit.
h. Resident Room Entrance: BAE discussed the option of a recessed room entrance with flooring change for a transitional area between the hallway and room.
   i. BAE presented the option of personalizing the entry way with some shelving or display area.
i. Shared Center Area: BAE reviewed a few options incorporation the Small Homes Model with Kitchenette/ Lounge Area with various features.
   i. Dr. Ali would like to consult Dr. Page for feedback as he has previously worked in a Dementia Unit.
   ii. VA expressed concern about the shadows with some of the design options.

4. **Primary Care:**
   a. Clinic Rooms: Six (6) exam rooms provided each 125 sq. ft.
      i. VA mentioned the concept of the "European" model which would have the DR.s office in the exam room. This would require the exam to be larger to accommodate office space and exam space.
      ii. VA estimated three or four of these types of office/exam rooms would be needed. VA to discuss internally and provide direction.
   b. Clinical Nurse Area: VA commented there would be a need for an area allocated for vitals/ blood draw.
   c. Typical Patient Flow: Check In> Waiting Room> Nurse (Vitals) > Exam Room
   d. Soiled/ Clean Linen: VA confirmed space does not need to be allocated within Primary Care. They can utilize existing nearby Soiled/Clean Linen areas.
   e. Waiting Room: BAE presented an options with waiting area within the clinic and outside the clinic.
      i. VA had concern over the small size of the waiting area in option 1.
      ii. VA commented Primary Care doesn't need its own waiting area.
      iii. COR expressed concern about how much space primary care is consuming and wants to ensure more space is used for higher priority requirements.
      iv. VA commented that if needed overflow waiting can utilize the new "easy street" area.

5. **Reception Desk**: VA confirmed space is only needed for two (2) people at the most.

6. **Dining:** BAE presented some seating options.
   a. VA confirmed banquet seating would not be ideal. Having EMS clean them would be a challenge and they would be underutilized by the Veterans.
   b. VA confirmed it is preferable to have tables and chairs for maximum flexibility.
   c. Glass Wall: BAE proposed a retractable glass wall to open up the space between dining and easy street.
      i. VA expressed concern if the entire wall is glass, the potential issue of breakage as there are many motorized wheelchairs.
      ii. BAE can look at options where the retractable wall is glass at the top and the bottom is another more durable material.

7. **Easy Street:**
   a. Windows: BAE proposed a window film or covering to allow light in but minimize the direct glares.
   b. The ideas presented was to keep the space open for gatherings and flow into the dining area by opening up the wall.

8. **Outdoor Space:**
   a. VA commented that the courtyard is utilized for socializing.
   b. Pavilion is used for parties
   c. Once the playground is demolished. VA would like the area to have a "park" feel with benches and added landscaping.
      i. BAE commented while some of the images are inspiration and not able to be completed in this project we can start with some landscaping to hide some of the mechanical units and privacy from the road.
9. **Wheelchair Storage**: VA commented that they would like a better space to locate the wheelchairs.
   a. VA stated they need to store approx. ten (10) wheelchairs.

10. **30% Deliverable:**
   a. VA confirmed 30% submittal will move seven (7) days from 11/16/2023 to 11/23/2023.
   b. Expectations: BAE will be showing demo drawings, most of the engineer information at this point with be in narrative format in the Basic of Design.

11. **Project Action Items:**
   a. Aaron to follow up with Juan on the status of the no-cost mod.
   b. VA users to meet internally and provide feedback/ design decisions to BAE by Friday, October 27th.

   c. Vickie to set up a bi-weekly meeting starting on Wednesday, 11/1. The first meetings focus will be on interiors.
   d. Vickie to provide a revised schedule based off the extended POP of 21 days.

End of Meeting Notes

This summary constitutes the writer's understanding of the basic matters discussed and the conclusions reached. The participants are requested to review the following and notify Bancroft-AE, of any exceptions, in writing, within ten (10) days of receipt of these meeting minutes. In the absence of such notice, these meeting minutes will be considered accurate.

Copies: BAE Fie | VA Station
Prepared By: Vickie Bastin | BAE PM

MEETING MINUTES

BANCROFT ARCHITECTS + ENGINEERS

MEETING MINUTES

November 3, 2023

Project: Renovating Portions to Building 217 (CLC)
Location: Edward Hines Jr. Hospital
VA Project: 36C5223C0071
BAE Project: 23-009
Meeting: Bi- Weekly Project Meeting – Interiors Discussion

Meeting Attendees:

- Aaron Walsh, VA COR
- Mary Tucker, VA Alt. COR & VA Interiors
- Melanie Fortune, VA Contracting
- Dennis Mika, BAE VP of Healthcare Design
- Darlene Flook, BAE Interiors Designer
- Anna Murray, BAE Architectural Interior Designer
- Vickie Bastin, BAE Project Manager

Meeting Minutes: The purpose of this meeting was for the VA and BAE to talk with Interior Designers to get a better understanding of stations expectations/ standards.

1. **Understanding goals/objectives**
   - VA confirmed that finishes are straight forward and in the 18-14 community living center and special unit
   - Mental health/ behavior health (110) should be considered as well
   - VA confirmed that TIL will be the bases of interiors and set the guidelines
   - Mary commented she liked the presentation BAE previously showed with the residential look for the dementia unit.

2. **Current VA Interior standards**
   - VA confirmed this project will set a new standard and BAE is not following what has been used in the past/ matching finishes.
   - VA confirmed BAE to establish new finishes based off TIL.
   -

3. **Flooring**
   - VA confirmed flooring should not have to be waxed and should help with wayfinding.
   - LVT or sheet Vinyl is okay
   - Carpet can be utilized in spaces as long as the space is not used for patient exam.
   - Mary is open to the use of a rubber flooring products

4. **Front Entrance**: BAE showed some walk thru 3D renderings to provide the VA of an idea of the space
   - VA commented that the lobby space is used by Veterans to look outside.
   - VA requested BAE to relook at the front entrance as it is very busy with staff moving patients to appointments to other areas of the hospital.

5. **Project Next Steps**
   - Mechanical Site Visit Scheduled for Thursday, November 9th at 11:15.
   - Next Bi-weekly Meeting: November 15th
   - BAE to submit 30% SD to Third Party Reviewer on 11/23/2023
   - Third Party Review Comments due to VA by 12/14/2023
   - VA comments due back to BAE by 01/04/2024

End of Meeting Notes

This summary constitutes the writer's understanding of the basic matters discussed and the conclusions reached. The participants are requested to review the following and notify Bancroft-AE, of any exceptions, in writing, within ten (10) days of receipt of these meeting minutes. In the absence of such notice, these meeting minutes will be considered accurate.

Copies: BAE Fie | VA Station
Prepared By: Vickie Bastin | BAE PM

3300 Dundee Road | Northbrook, IL 60062
California | Connecticut | Colorado | Florida | Louisiana | Oklahoma | Pennsylvania | Virginia | Wisconsin
847.952.9362 | www.bancroft-ae.com

BANCROFT ARCHITECTS + ENGINEERS

MEETING MINUTES

BANCROFT ARCHITECTS + ENGINEERS

MEETING MINUTES

January 10, 2024

Project: Renovating Portions to Building 217 (CLC)
Location: Edward Hines Jr. Hospital
VA Project: 36C5223C0071
BAE Project: 23-009
Meeting: 30% Submittal Review with BAE & VA

Meeting Attendees:

- Aaron Walsh, VA COR
- Mary Tucker, VA Alt. COR & VA Interiors
- Juan Gaytan, VA CO
- Peter Mathis. VA
- Salman Ali, VA
- Kyle Page, VA
- Jason Espinosa, VA
- Mandi Evanson, VA
- Richard Fraider, VA
- Martin Jensen, VA
- Tersea, Carr, VA
- Joevy Ditchella, VA
- Kellie Cambell, VA
- Dennis Mika, BAE VP of Healthcare Design
- Connor Rollins, BAE Architect
- Anna Murray, BAE Architectural Interior Designer
- Vickie Bastin, BAE Project Manager

Meeting Minutes: The purpose of this meeting of this meeting is to review the 30% documents, review any questions and have a clear path forward to proceed to 60%.

1. **Bariatric Rooms:** BAE reviewed options shown in the BOD

- **VA preferred and selected option 3 for this selection.**

- VA Dr. Mathis commented that some of the rooms selected are currently offices. Originally the SOW had four (4) rooms selected, however after review three larger rooms were selected by users.
- 2B and 2C are currently offices and the plumbing has been removed.
- Per the users, Bariatric Rooms they understand there will not be a Bariatric Room on each wing. 1B40 and 1C49, none on the second floor.

2. **High Risk Fall Rooms:** BAE review options in the BOD. Users confirmed the inboard toilet room, same logic as Bariatric Rooms.
   - **Users Choose Option 3, visibility of the bed is ideal.**
   - VA commented how the rooms selected are currently double occupancy. BAE commented that a shower was added and therefore only one bed would fit.
   - VA commented patient care cameras will be installed at a later date to address other high fall concerns. These rooms would be used for the highest risk Veterans.

3. **Dining Room on Floor 1 and 2:** BAE reviewed BOD options that were worked through and making the Dining Room a destination.
   - **Option C with modifications: moving door and correcting TR room.**

- VA users asked what finishes are different in the options.
- VA added the downstairs will be a high use. Upstairs are more nursing homes, 2C homes with 30 patient and one area is a hospice and don't utilize the dining area, downstairs has 80 patients.
- BAE showed three options for the first floor wall to create a service area.
- VA commented that the Kitchen has a lot of items out in the area outside of the kitchen.
- Users would also like they want to separate the kitchen staff from the dining experience. VA users commented there is a wish list of items they would like as well.
- VA commented quality of the NFS is a high initiative based off residence feedback. If providing additional square feet for the kitchen would improve the quality of food the users are open to have that conversation.

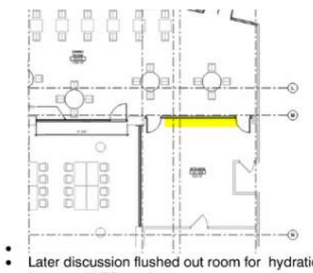

- Later discussion flushed out room for hydration station, steamer and improved NFS services.
- Carol Goerge is food service chief. If we need more details.
- BAE will review the space shown below to accurately size the area.

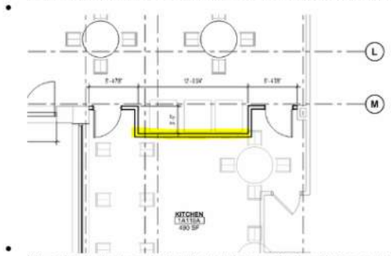

- VA asked what would be the total capacity for dining on the first floor.
  - BAE commented 36 as it is shown right now but can be refined with furniture selections and layout. BAE asked if there is an ideal number. Right now there are 86 vets on the first floor, some are not mobile so ideal space for 60 Vets. Kellie commented that ensure wheelchair space is important.
- COR asked about the glass walls that divide the dining and easy street if the users want to change anything.
  - Dr. Ali asked if there are any privacy options. BAE commented there are options with integrated blinds or opaque glass.
  - VA asked about sound. BAE commented there are ways to address the acoustical needs.

4. **Playground Removal:** BAE reviewed the addition of scrubs and future development of the area.

BANCROFT ARCHITECTS + ENGINEERS

- **VA commented Option B is what is selected and would need grounds input on planting selections.**

5. **Dementia Unit:** BAE reviewed BOD layout selections
   - **Option C with modifications. Keep bathroom in 2A20**

- BAE called out there was some discrepancy between the BOD and Drawings. Then reviewed BOD images.
- VA commented on the "glass panels" Dr Page joined the meeting and COR asked the users to comment on the panels.

- BAE commented it would be a resin/ acrylic. BAE commented there will need to be some refinement on the location and to what extent the panels are used to ensure there is still visibility to some area but also defining the space.

- BAE shared the above image of where previous discussions left off.
- User Group selected Option C that included the room alcoves with memory boxes.
  - VA called out recessed entries to patient rooms and the users favor including this.
- Per VA Salley Doors at both entrances would be needed. BAE called having Salley doors create some challenges and the space it requires. One concern is the rooms the Salley Doors on the west side of the space.
- Dr Kyle commented that his experience at other VA's with 20 patients at times Staff found it was hard to leave the unit.
- COR asked BAE to position doors to be least impactful.
  - BAE mentioned this would be impactful with the location of the doors. Inside the doors there would be adjacent areas that would have limited access.
  - COR asked BAE to position doors to be least impactful.
- Area behind the nurse's station: COR commented that the space has a larger shower and bather and Dr Ali commented that is used by the patients currently. COR there are other bathrooms in the space for patient use.
  - VA discussed if the nurses can lose the space behind the proposed nurse station. Joey Ditchella joined the meeting and clarified there are only two (2) showers, and they are both used.
  - The bathroom is needed and two (2) showers.
  - VA commented they can "fix" the broken showers.
- Aaron and Vickie to discuss later how to accommodate this change.
- VA discussed concern regarding storage needs.
- Needs are staff toilet, med room (VA to provide Pixsus info)
- Reception Desk Area: BAE asked VA to share what sit down positions are needed in the unit to ensure area is right sized.
- Ceiling clouds: VA commented wanted to limit the amount of shadows any features
- VA asked the internal team if there are any functions or spaces that we need to take into account that would effect the design. VA users commented there was nothing they can think of.

3300 Dundee Road | Northbrook, IL 60062
California | Connecticut | Colorado | Florida | Louisiana | Oklahoma | Pennsylvania | Virginia | Wisconsin
847.952.9362 | www.bancroft-ae.com

6. **Entrance/ Clinic Area:** Options reviewed and how we came to proposed layouts
   - **Option selection chosen is a hybrid option c and a with modifications. Larger exam rooms with provider workstation. Reception and waiting to align with option C.**
   - Typically, a PACT exam room is 125, larger exam rooms shown are 145 sq. ft.
   - BAE commented previously there was a concern with office space for the clinic so a previous thought was five larger so office space can be accommodated.
   - Kellie commented that they now have wound care which requires storage.
   - It was also brought to BAE's attention the need for additional items:
     - medication is not stored within the clinic but there is a refrigerator that houses immunization, EKG machine, scale (housed in vitals room) and Phlebotomy (a cart that houses supplies).
   - Lab Samples Process> Blood Draw in Nurse Station then it goes to reception to go to lab.
   - Joey Commented they want a sperate for the clinics. Dr. Mathis commented that the CLC does not have a reception. VA commented that the reception can be dual purpose. Dr Ali added flexibility is key.
   - Kellie commented RN and LPN need desk space. User group commented that they may need to take over the family room. User asked the toilet to be closer to vitals.
   - VA commented that the angled wall is not idea. BAE to address.

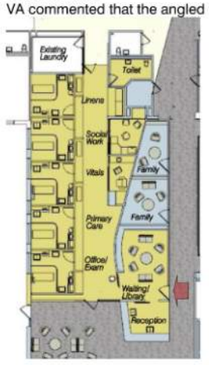

3300 Dundee Road | Northbrook, IL 60062
California | Connecticut | Colorado | Florida | Louisiana | Oklahoma | Pennsylvania | Virginia | Wisconsin
847.952.9362 | www.bancroft-ae.com

MEETING MINUTES

- COR asked the users if there is anything missing from the clinic that would need to be considered. Wound Care Clinic
- Dr. Mathis commented that the original reception area for the clinic is no longer needed used and asked if we remodel to use as storage.
  - COR called out that the funds for this project is earmarked for spaces for veterans use, storage would not be included in this.
  - Vickie called out the need to stay within the boundaries of the areas that are defined in the SOW. The original receptions area is outside of our SOW.
  -

7. **2nd Floor Patio:** BAE explained the process of waterproofing and talked through the three design options.
   - BAE asked how frequently is the patio used. VA commented when it was available to use it is frequently used based on weather.
   - VA liked the feel of the wood decking.
   - **BAE to develop option C with the wood decking per VA selction.**

8. **Easy Street:** The goal is to provide as much flexibility as possible. BAE shared different layout options.
   - **Option C as a hybrid with the addition to include an option for storage.**

- Dr. Mathis liked the option of openness of the space but questions if the spaces was used for a lecture, then another purpose where would the furniture be located.
  - BAE to explore storage options and best locations.
  - Since there are such high ceilings the shape of the room will have to be looked at.
- Mary called out the need for the furniture to be selected.
- BAE and VA Interiors moving forward to look at furniture selections.
- VA commented on the need for temporary dividers.

End of Meeting Notes

BANCROFT ARCHITECTS + ENGINEERS

MEETING MINUTES

BANCROFT ARCHITECTS + ENGINEERS

MEETING MINUTES

January 12, 2024

Project: Renovating Portions to Building 217 (CLC)
Location: Edward Hines Jr. Hospital
VA Project: 36C5223C0071
BAE Project: 23-009
Meeting: 30% Design Review Follow Up

Meeting Attendees:

- Aaron Walsh, VA COR
- Dennis Mika, BAE VP of Healthcare Design
- Connor Rollins, BAE Architecture
- Vickie Bastin, BAE Project Manager

Meeting Minutes: The purpose of this meeting was for the VA and BAE to recap design decisions made on the 30% submittal and discuss any impactful decisions that may be outside of the original SOW.

1. **Requirement 1: Easy Street**
   - Option c as a hybrid with to include option for storage.
   - VA called out other requirements like AV, speaker and other equipment.
   - VA understands the other requirements will come at the 60% but wanted to ensure there was nothing that would affect the 60%.
   - **VA selected Option C as a hybrid and to include storage within the space.**

2. **Requirement 2**: N/A Removed from SOW

3. Requirement 3: Entrance Lobby/ Clinic

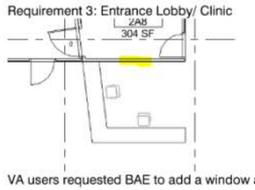

- VA users requested BAE to add a window as shown above.

- BAE started revising drawings to include comments received earlier in the week. Revit model is currently showing the removal of both family rooms but this area is still be revised.
  - COR commented one family room to remain, the spirit of this project/ donations was to improve veterans.
- VA asked for something visual for the users to get a better sense of the space.
- Wheelchair coral to remain in current location
- **The selection chosen by VA is a hybrid option C and a with modifications. Larger exam rooms with provider workstation. Reception and waiting to align with option C.**

4. **Requirement 4: Dining Rooms**
- Aaron would like to make sure the area allocated to the kitchen is right sized.
- BAE to right sized the TR room in the Dinning space.
- VA asked moving forward BAE to show some renderings for finish options moving forward.
- **Option C with modifications: moving door and correcting TR room.**
- VA confirmed there will not be changes to the design to the EHRM drawings.

5. **Requirement 5: Library 1B80 Renovation**
- VA requested if finishes don't match, BAE to match finishes to match.

6. **Requirement 6: Bariatric Rooms**
- **VA section option 3 with in board toilets with bed on left side of the room**

7. **Requirement 7: Repair 2nd Floor Courtyard**
- **VA selected option C with the wood composite decking.**

8. **Requirement 8: Dementia Unit**
- **VA selected option C with modifications. Keep bathroom in 2A20**
- BAE reviewed the locations of Sally Port Doors and how it would impact spaces. VA understand installing the double doors it would impact
  - Sally Port Doors need to be 10-12 feet apart to accommodate moving a Veteran on cart.
  - VA to lose a minimal two (2) rooms with in the Sally Doors.
  - BAE called out that adding the doors extend the units hallways which would expand our SOW area for this requirement.
  - Connor mentioned if having one main entrance with Salley Doors is an option. COR like the idea of having one set of Salley Doors and can have the other doors for employee access only.
  - VA and BAE to review this next week with the users.
  - Add the space behind to be reviewed to defined. If this area is to be added to the project. VA would need to review with contracting to add this area to the SOW and draft a modification for those efforts.

9. **Requirement 9: High Fall Rooms**
   - **Users Choose Option 3, visibility of the bed is ideal.**

10. **Requirement 10: Equipment Storage**
   - VA to discuss with users the best way to use this space.
   - BAE commented due to the size of this room fire rated walls will have to be added.

11. **Requirement 11: Playground Removal**
   - **VA commented option B is what is selected and would need grounds input on planting selections**.

12. Requirement 12: Exterior Smoke Shelter removal – no options

13. **Requirement 13: Dining Lounge**
   - **VA selected option C with modifications.**
   - VA requested BAE to provide rendering to show finishes for users to make a more informed decision.

14. **Requirement 14: New Flooring**
   - VA asked for OPCC for CLIN 2
     - BAE to provide/ resend BAE does have a n OPCC on file CLIN 2.
     - VA asked what type of flooring was used for OPCC.
     - BAE explained it was LVT planks like is in part of the CLC.
     - BAE also commented if terrazzo or other more expensive flooring is selected it would increase the cost.

VA brought up phasing of the overall project. BAE will review and incorporate phasing and provide initial plan in the 60% for the VA to review.

VA requested follow up meeting next week to finalize some of the design decisions with the user groups.
   - BAE to set up meeting next week Wednesday at 2:30.

VA understands that there will be a change in the project schedule due to the delay in getting VA review comments and solidifying design decisions for BAE to move forward with the design.

End of Meeting Notes

This summary constitutes the writer's understanding of the basic matters discussed and the conclusions reached. The participants are requested to review the following and notify Bancroft-AE, of any exceptions, in writing, within ten (10) days of receipt of these meeting minutes. In the absence of such notice, these meeting minutes will be considered accurate.

Copies: BAE Fie | VA Station
Prepared By: Vickie Bastin | BAE PM

BANCROFT ARCHITECTS + ENGINEERS

MEETING MINUTES

BANCROFT ARCHITECTS + ENGINEERS

MEETING MINUTES

January 17, 2024

Project: Renovating Portions to Building 217 (CLC)
Location: Edward Hines Jr. Hospital
VA Project: 36C5223C0071
BAE Project: 23-009
Meeting: 30% Design Review Follow Up

Meeting Attendees:

- Aaron Walsh, VA COR
- Juan Gayton, VA CO
- Mary Tucker, VA Alt. COR
- Peter Mathis. VA
- Salman Ali, VA
- Binu, Polakkattil
- Martin Jensen, VA
- Christopher Jay
- Dennis Mika, BAE VP of Healthcare Design
- Connor Rollins, BAE Architect
- Anna Murray, BAE Architectural Interior Designer
- Vickie Bastin, BAE Project Manager

Meeting Minutes: The purpose of this meeting is for the VA and A/E to discuss and get clarification on design decisions that were made in the 30% review.

1. **Review of Requirement 3: Entrance Lobby/ Clinic**
   - BAE shared a progress drawing of the Clinic Space that incorporated comments from the 30% design (Image Below)

- Exam Room/ Office: Five (5) larger exam/offices rooms w/ additional space to for a physician's workstation.
- Corridor reduce to 6 ft wide, thus allocating more space for equipment alcoves and closet storage (possibly for linens) within the Clinic.
- Proposed Plan added a transaction window for the MSA to check-in Veterans from the waiting area side.
- Bathroom: specimen pass-through door has been added to a counter work station with sink area and undercounter refrigerator.
- VA asked how many can seats will be available in the clinic area.
  - BAE: Depending on furniture selected, the waiting area will accommodate 6 to 8 Veterans.
  - VA confirmed that is sufficient space to accommodate the Clinic Area.
- The proposed plan removed the two (2) family rooms and reallocated space for Clinic needs.
  - VA confirmed and approved the removal of both family rooms to allocate space for the displaced clinic.
  - VA does not have a concern with removing the family rooms as there are other locations within the CLC to accommodate smaller visitation needs.
  - VA asked if the nurse work room of 130 sq feet is needed? VA Users commented that the room would be used for charting and could possibly be used for two (2) people.
  - VA requested if the social worker office to be reduced to allow more space for the vitals.
    - BAE can shift the space allocated to social workers to add space to Vitals Room.
    - BAE commented that it is important to understand what equipment is required in the vitals rooms (EKG, blood draw chair, scale) so we can right size the rooms.
    - As the drawings are refined BAE suggests an equipment list be provided for all new rooms.
    - Jovey is the best person to ask about items regarding Clinic needs.
  - VA COR asked User Group if there are any other minor changes that would require plan adjustments to support Clinic needs.
    - VA does not have any other minor changes and thinks the layout meets the needs of the Clinic.
    - As discussed in the previous meeting, the Clinic will continue to share adjacent spaces and functions to support the Clinic. As the Clinic is currently set up there are shared support areas outside of the immediate Clinic area.
- Wheelchair Storage
  - VA requested a more contained area for wheelchairs that is not as visible.

2. **Second Floor Dining Room**
   - VA approved mirrored image of the first floor with updating finishes and better access.

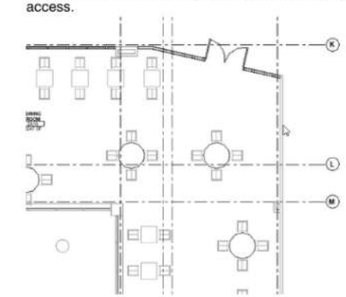

- VA user group likes the flexibility of having the larger space so would like a moveable wall just in case the space needed to be broken up.
- VA commented currently where we show the double doors there is a temp data closet.
  - Data closet will be moved during the EHRM project. Aaron to note that timing will be important of the projects to accommodate the new dining entrance.
- Food is brought up to second floor dining in a refrigerated size cart.

3. **Requirement 8: Dementia Unit**
   - Sally Port Doors: The largest concern is the doors to page North. Having two (2) sets of Sally Port Doors the ones to the north will have two or three rooms locked between the Sally Port Doors
   - BAE recommends one to be a staff entrance, with only the main entrance having a Sally Port.
     - After review VA commented that having one main entrance with a Sally Port is approved.
- Bathroom in multipurpose room 2A20 is staying, users group confirmed.
- Staff Area : Needs are staff bathroom, room for storage & medications.
  - **This area is currently outside of the sow and in order for this area to be incorporated into this project a modification would be required.**
  - **COR/CO to review and provide direction in the week ahead. COR will have to look at how the area will be funded.**

BANCROFT ARCHITECTS + ENGINEERS

4. **Requirement 10: Equipment Storage**
- 1B178: removing lockers and adding 4ft door for ease of storage to optimize the space.
- VA asked Users if there were any other changes needed to this space to make it more functional ?
    - VA Users did not have any other needed changes, just an open space.

5. Vickie shared with the VA that shortly after the new year, Darlene Flook resigned from BAE. Moving forward Dennis Mika and Anna Murray will be fulfilling those efforts.
    - VA has no concerns.

End of Meeting Notes

This summary constitutes the writer's understanding of the basic matters discussed and the conclusions reached. The participants are requested to review the following and notify Bancroft-AE, of any exceptions, in writing, within ten (10) days of receipt of these meeting minutes. In the absence of such notice, these meeting minutes will be considered accurate.

Copies: BAE Fie | VA Station
Prepared By: Vickie Bastin | BAE PM

3300 Dundee Road | Northbrook, IL 60062
California | Connecticut | Colorado | Florida | Louisiana | Oklahoma | Pennsylvania | Virginia | Wisconsin
847.952.9362 | www.bancroft-ae.com

MEETING MINUTES

BANCROFT ARCHITECTS + ENGINEERS

MEETING MINUTES

January 24, 2024

Project: Renovating Portions to Building 217 (CLC)
Location: Edward Hines Jr. Hospital
VA Project: 36C5223C0071
BAE Project: 23-009
Meeting: Project Meeting

Meeting Attendees:

- Aaron Walsh, VA COR
- Juan Gayton, VA CO
- Katrina Haynes, VA
- Jennifer Ridgeway, VA
- Kellie Campbell, VA
- Maria Zamarripa, VA
- Joevy Ditchella, VA
- Christopher Jay
- Dennis Mika, BAE VP of Healthcare Design
- Connor Rollins, BAE Architect
- Anna Murray, BAE Architectural Interior Designer
- Vickie Bastin, BAE Project Manager

Meeting Minutes: The purpose of this meeting is for the VA and A/E to discuss agenda items and provide project updates.

1. Follow up on Equipment List
   - VA provided equipment list for the Vitals Room via email
     - BP machine, EKG, Chair lift, weighing scale- wheelchair patients; treatment cart, need a sink.
     - BP Machine- Welch Allyn Connex Vital Signs Monitor on wheels.
     - Mounted to wall Welch Allyn Connex Integrated Wall System
     - Cart Lab Tray & Rack with wheels
     - Detecto Weighing Scale wheelchair chair – VA to provide a picture.
     - EKG Machine- GE- Mac Vu 360 – EE- 135465
     - New Chair Lift
       - BAE ask for more details regarding the chairlift
       - Jovey commented there is a chair on the fifth floor in B200 she will get more details on the chair. It was commented the chair has arms and used for blood draw.

2. Interior Discussion:
   - Flooring: Carpet Carpeting proposed in Easy Street and Social Worker Office for acoustic values. VA okay with carpeting in that area

     - 2nd floor conference room is currently white vinyl and library portion is carpeting. VA would like both spaces to be the same.
     - CLIN2 Flooring - non wax flooring is preferred by VA.
   - BAE reviewed BOD Interiors information.
     - Maria from interior design prefers option 1 with warm colors. Maria liked the solid surface colors to be darker.

Option 1

     - BAE brought up research on fractals and the benefits of calming effects of the use. VA commented they are open the use of fractals in areas that makes sense, perhaps the clinic area.
   - Maria comments in the basement in B200 near the GU clinic the VA has Lumicore panels. VA commented they would want to review the panel locations to ensure they will not be damaged.
   - Maria prefers more subtle Lumicore panels, it was commented the grasses appear alittle busy.
   - Patient rooms moving forward will have cherry finished furniture.
     - VA to send over the information to ensure the colors of the furniture go together. BAE requested the collection information.
   - Next steps would review accent walls, images and production options. The purpose of this meeting is to get a general direction from the VA.
     - Proposed follow up interiors meeting on January 31st. VA to review date and time with internal parties.

3. Kitchen Support Area
   - Right sizing the space per VA direction, follow up from Carol George.
     - VA to follow up to get equipment list to right size the space needed for the kitchen staff.

4. Dementia Unit
   - Pyxis Specifications: VA to provide specs.
   - MOD status: Per VA this is in the works, should have an update next week. Aaron to contract Vickie later this week if there are question or item that require further discussion.

5. Proposed Site Visit:
   - Electrical & Mechanical needed, proposed February 5th.
     - VA approved the site visit on February 5th with a 9AM arrival.
     - BAE to follow up with a list of areas our team will need access too.

6. BAE Invoice Questions: VA has reviewed and approved the invoice by the time of the meeting.

7. VA Comments/Questions:
   - There was a question of if the schedule has been shifted due to the delay with the 30% VA review comments.
     - As of right now, BAE is going to proceed with the schedule as is. Below dates reflect the original schedule.
     - Unless something unforeseen comes out of the site visit, we are going to try and proceed with the original schedule.

8. Project Next Steps
   - Interiors Meeting
   - Next Bi-weekly Meeting: February 7th, 2024
   - BAE to submit 60% to third party reviewer 03/03/2024
   - Third Party Review Comments due to VA by 3/25/2024
   - VA comments due back to BAE by 04/15/2024

End of Meeting Notes

This summary constitutes the writer's understanding of the basic matters discussed and the conclusions reached. The participants are requested to review the following and notify Bancroft-AE, of any exceptions, in writing, within ten (10) days of receipt of these meeting minutes. In the absence of such notice, these meeting minutes will be considered accurate.

Copies: BAE Fie | VA Station
Prepared By: Vickie Bastin | BAE PM

BANCROFT ARCHITECTS + ENGINEERS

MEETING MINUTES

BANCROFT ARCHITECTS + ENGINEERS

MEETING MINUTES

February 1, 2024

Project: Renovating Portions to Building 217 (CLC)
Location: Edward Hines Jr. Hospital
VA Project: 36C5223C0071
BAE Project: 23-009
Meeting: Interiors Presentation/ Meeting

Meeting Attendees:

- Aaron Walsh, VA COR
- Juan Gayton, VA CO
- Mary Tucker, VA Alt. COR
- Dr. Ali Salman, VA
- Peter Mathis, VA
- Mandi Evanson, VA
- Kyle Page, VA
- Maria Zamarripa, VA
- Joevy Ditchella, VA
- Dennis Mika, BAE VP of Healthcare Design
- Connor Rollins, BAE Architect
- Anna Murray, BAE Architectural Interior Designer
- Vickie Bastin, BAE Project Manager

Meeting Minutes: The purpose of this meeting is for the A/E to present BAE's intent and direction on interior design for the spaces. VA to provide comments to develop areas.

1. **Dementia Unit**:
   - BAE spoke on light reflectance value difference and how that will affect some interior decisions in this space.
     - Values range: 70 (lightest) to 22 (darkest), 10 - 40 value is the goal. Floors should be fairly dark 10-20 value, with lighter walls and washrooms less than 10 with low contrast between bedroom and bathroom.
   - BAE asked if VA was interested in the use of carpet or carpet like material in the help with sound.
     - VA concern is maintenance.
     - Maria commented that the VA would need to comply with the TIL. Per Mandi she is not a fan of carpet in nursing home setting and how it wears.
   - VA is open to the idea of carpeting but will need to ensure that it complies with TIL.
   - BAE talked about small homes and fireplace elements.

     - Kyle has commented that he has seen this in other facilities and it was welcomed by the residence and staff . VA commented that it does add to the space.
   - Multipurpose Room : BAE asked about using the room as multisensory room and the potential use if fractals.
   - BAE asked the VA if it makes sense to utilize the space for this.
     - Per VA there was a meditation room in the CLC that was not used by the Veterans. Per Kyle he is onboard with the multisensory. However, the room is rather small already. He does think the space will be used as a destination for a family room or another place to gather.

   - Resident Room: VA shared last week that the room furniture would be cherry. BAE asked if this would be light or darker, as this will affect the flooring color.
     - VA later clarified that the color is Chestnut and showed images of the new furniture. VA to send over proposed interiors standards moving forward.
     - Accent Wall: BAE proposed the accent wall be at the foot end so the Veteran is able to see that verse the head end.
     - VA agrees that moving away from the hand washing station by the door and likes the built in the dementia rooms.
     - VA would like to move away of throwing everything on the foot wall.

   - Toilet Rooms: BAE proposed Altro which is an alternative to tiles. It is seamless with low profile with integrated drain.
   - Additional Treatment Room Request: Dr. Ali commented that neurology chief asked about considering if there was a space for staging Lecanmab Infusion instead of 9E (chemotherapy)?
     - Kyle commented it would make more sense to have that treatment room outside of the unit. As it would not be ideal to bring additional traffic through a locked unit.
     - Dr. Page suggested that the infusion room be part of the clinic. The clinic area could not afford to lose a clinic room.
     - Aaron asked if the infusion room has to be a dedicated space or can it share. Per Dr. Ali ideally it would be like 9East but not as large. Kyle commented that it is intuitive to have a treatment room within the dementia unit that we are trying to create a home feeling.
     - VA to discuss internally and this treatment room request maybe incorporated in another project but will need to reviewed in more detail internally.
     - Chief of Nero Dr. Rubin would need to get on a call and we would need to talk through this request as it is not part of the original Dementia plan or part of the SOW.

2. **Easy Street:** BAE shared images of the space.
   - VA likes the use of baffles.
     - BAE commented on step baffle and reviewing options.
   - Upper windows VA proposed automatic blinds for use of movie to control the light coming into the space.

   - Dr. Ali asked about acoustic, to make it more it more acoustically friendly.
     - COR commented there will be integrated lighting and sound.
   - Second floor looking down; does the VA want to conceal the windows?
     - DR. Ali commented perhaps being able to see down would be a benefit. The Veterans can see what is going on and observe activities.
   - Glass wall between Easy Street and Dinning: VA likes the flexibility it provided to open up the space or separating.
   - Flooring: Proposed flooring is the use of carpeting or a carpet like composite that can withstand heavy wear.
     - VA is concerned about that food would be brought into the space during some events and having the carpeting.
       - BAE to review composite carpeting.

3. **Dining**: BAE shared images and proposed space elements.
   - Aaron commented he is a fan of the biophilic image. BAE commented this can be handled a few ways with panels or films
   - Flooring: proposed flooring in this area is LVT.

4. **Clinic**: BAE reviewed the patient flow and features.
   - VA commented on alcoves and potential storage.

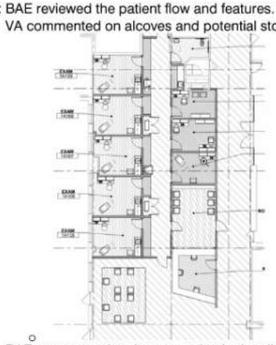

   - BAE commented on how to un-institutionalize the space and shared images of proposed use different wall types.

BANCROFT ARCHITECTS + ENGINEERS

- VA asked about privacy issues with translucent. BAE commented they can be different levels of translucency
- Mary commented that these can be half walls to ease the concern about breakage or durability

5. **Front Door:**
   - Flooring: BAE asked about the VA thoughts regarding carrying the flooring throughout. Dementia Unit will he handled as its own isolated areas.
     - Pediment is integrated which is a challenge and it has to be unscrewed to clean out.
     - Mary commented she is like what BAE showed and likes homey upscale more modern approach.
   - Mary comments the donor redesignation and to provide new VA logo.
   - BAE spoke on the exist of the Geri Clinic

- If Vinyl is being used throughout, having a carpet inlay to identify the spaces.

6. **Overall comments**:
   - BAE asked if there are any red flags or proposed items the VA did not like.
     - COR commented as long as we meeting the TIL requirements, he would like BAE to be as creative as possible.
     - VA asked CLC VA Team if they had any input on color or finishes, they have seen?
       - VA enjoyed the presentation and agrees with the direction with proposed images.

- BAE to provide a copy of the presentation to the VA.
- Next steps would be refinement of the spaces and proposed materials.

7. **VA Interiors Information/Presentation on Station Standards**
   - Maria showed the images of new furnishings that has been ordered.
   - VA looking toward installation in March, it has been awarded.
   - VA likes lighter flooring

   - Kwalu: will be wardrobe Camelot and night stand will be New York.
   - Mary Comment the CLC is constructing a mock up room to easy concerns, one being rodents. VA will have a thicker wall base to hopefully help this issue.
   - VA to provide CLC-Interiors Desing Finishes and Furniture for Patient Room.
   - Mary Commented that we may need to involve EMS to review how to maintain the proposed carpet. The EMS maintenance right now is minimal so there may be some awareness or retraining what is needed maintain.
   - VA to send over the presentation for the new interior standards. However, the VA requested BAE to keep moving forward in the direction we have been headed and if there needs to be adjustments on the interior standards for the CLC they are open to modifying the VA standards if needed.

Attachments BAE sent prior to the meeting mins:
- Bancroft Hines CLC Interiors Presentation.pdf

End of Meeting Notes

This summary constitutes the writer's understanding of the basic matters discussed and the conclusions reached. The participants are requested to review the following and notify Bancroft-AE, of any exceptions, in writing, within ten (10) days of receipt of these meeting minutes. In the absence of such notice, these meeting minutes will be considered accurate.

Copies: BAE Fie | VA Station
Prepared By: Vickie Bastin | BAE PM

MEETING MINUTES

BANCROFT ARCHITECTS + ENGINEERS

MEETING MINUTES

February 21, 2024

Project: Renovating Portions to Building 217 (CLC)
Location: Edward Hines Jr. Hospital
VA Project: 36C5223C0071
BAE Project: 23-009
Meeting: Weekly VA & A/E Meeting

Meeting Attendees:

- Aaron Walsh, VA COR
- Juan Gayton, VA CO
- Mary Tucker, VA Alt. COR*
- Dr. Ali Salman, VA*
- Peter Mathis, VA*
- Mandi Evanson, VA*
- Kyle Page, VA*
- Maria Zamarripa, VA*
- Joevy Ditchella, VA
- Christopher Jay, VA
- Andrea Anderson, VA
- Dennis Mika, BAE VP of Healthcare Design
- Connor Rollins, BAE Architect
- Anna Murray, BAE Architectural Interior Designer*
- Vickie Bastin, BAE Project Manager*

Meeting Minutes: The purpose of this meeting is for the A/E to present BAE's intent and direction on interior design for the spaces. VA to provide comments to develop areas.

1. Equipment List follow up
   - BAE to re-send equipment list
2. Kitchen Support Area: Right sizing the space per VA direction, follow up from Carol George.
   - VA to try again to discuss kitchen equipment requirements with kitchen staff
3. Dementia Unit
   - Clean Utility & Clean/ Dirty Linens
     - Eye wash in soiled utility
   - BAE to review breaking up 1B178 for clean storage
   - MOD status
     - Submitted
     - 4 week extension
   - Only 2 showers
     - Space for shower stretcher
       - 2 stretchers
4. "Easy Street" drawings/classification
   - AHU in the process of being sized
   - VA has requested cost estimate once AHU is selected.
   - Look into waiving atrium smoke evacuation requirement
5. Interior Status:
   - Currently working on gathering materials
   - Next Steps/ Goal: Live presentation with samples (after March 3rd, dated TBD)
6. VA Comments/Questions
   - Booz Allen Hamilton is 3rd party Life Safety Reviewer
7. Project Next Steps
   - Next Bi-weekly Meeting: March 6th , 2024
   - BAE to submit 60% - Shall be revised based off receiving the Modification request for additional SOW.

End of Meeting Notes

This summary constitutes the writer's understanding of the basic matters discussed and the conclusions reached. The participants are requested to review the following and notify Bancroft-AE, of any exceptions, in writing, within ten (10) days of receipt of these meeting minutes. In the absence of such notice, these meeting minutes will be considered accurate.

Copies: BAE Fie | VA Station
Prepared By: Vickie Bastin | BAE PM

3300 Dundee Road | Northbrook, IL 60062
California | Connecticut | Colorado | Florida | Louisiana | Oklahoma | Pennsylvania | Virginia | Wisconsin
847.952.9362 | www.bancroft-ae.com

BANCROFT ARCHITECTS + ENGINEERS

MEETING MINUTES

BANCROFT ARCHITECTS + ENGINEERS

MEETING MINUTES

February 27, 2024

Project: Renovating Portions to Building 217 (CLC)
Location: Edward Hines Jr. Hospital
VA Project: 36C5223C0071
BAE Project: 23-009
Meeting: Weekly VA & A/E Meeting

Meeting Attendees:

- Aaron Walsh, VA COR
- Juan Gayton, VA CO
- Mary Tucker, VA Alt. COR*
- Carol George, VA NFS
- Candice West, VA
- Dennis Mika, BAE VP of Healthcare Design
- Connor Rollins, BAE Architect
- Vickie Bastin, BAE Project Manager

Meeting Minutes: The purpose of this meeting is for the A/E to present BAE's intent and direction on interior design for the spaces. VA to provide comments to develop areas.

1. Kitchen
   - Overall concerns with making drastic/too many changes to kitchen
   - Tray line is against hallway wall. Kitchen equipment on right side of vertical line in the drawing
   - EMS does not do any kitchen cleaning besides the floor
2. New Kitchen Support Area
   - VA to provide specs of equipment for kitchen support area
   - Needs space and utilities for:
     - Food delivery carts (~8)
       - Will need to be plugged into kitchen support area
     - Induction Burners
       - 110W plug
       - Will be stored in support area and brought out to dining room for use periodical use
     - Fridge and Freezer
     - Rapid Cook Oven
   - VA commented the door from hallway to support area is not needed. Remove existing alcove and doorway to corridor
   - Support area needs separate doors for clean and dirty
     - Alternatively, it could be opened up, but this could cause mechanical impacts
3. New Dining Area
   - Currently, the food is brought from kitchen 200. Veteran's meals are delivered and prepared by staff and delivered to patients. With these changes, the hope is to have the veterans come to the dining room to eat
   - Need space and power for relocated items (currently at letter "N" on drawing, and need to be moved to letter "L". Will require water and electrical:
     - Coffee bar
     - Ice and water machines
     - Low calorie beverage machine
     - Vending machines
       - To be kept, but kitchen team is not over that space
4. Ambassadors
   - VA commented space across hall has been allocated for them. Nothing needed for this projects area of work.
5. Action items – **Submit by COB 3/1/24:**
   - Nutrition and Food Service
     - Provide complete list of new equipment and services for the kitchen support area
       - Carol to have kitchen list by March 1
     - Confirm the list of relocated items for the dining room (above)
     - Confirm the number of food delivery carts
   - Hines Engineering
     - Revise and resubmit SOW for change order #2

End of Meeting Notes

This summary constitutes the writer's understanding of the basic matters discussed and the conclusions reached. The participants are requested to review the following and notify Bancroft-AE, of any exceptions, in writing, within ten (10) days of receipt of these meeting minutes. In the absence of such notice, these meeting minutes will be considered accurate.

Copies: BAE Fie | VA Station
Prepared By: Vickie Bastin | BAE PM

3300 Dundee Road | Northbrook, IL 60062
California | Connecticut | Colorado | Florida | Louisiana | Oklahoma | Pennsylvania | Virginia | Wisconsin
847.952.9362 | www.bancroft-ae.com

3300 Dundee Road | Northbrook, IL 60062
California | Connecticut | Colorado | Florida | Louisiana | Oklahoma | Pennsylvania | Virginia | Wisconsin
847.952.9362 | www.bancroft-ae.com

BANCROFT ARCHITECTS + ENGINEERS

MEETING MINUTES

BANCROFT ARCHITECTS + ENGINEERS

MEETING MINUTES

March 6, 2024

Project: Renovating Portions to Building 217 (CLC)
Location: Edward Hines Jr. Hospital
VA Project: 36C5223C0071
BAE Project: 23-009
Meeting: Weekly VA & A/E Meeting

Meeting Attendees:

- Aaron Walsh, VA COR
- Juan Gayton, VA CO
- Mary Tucker, VA Alt. COR*
- Carol George, VA NFS*
- Candice West, VA*
- Amanda Logan, VA
- Javier Martinez, VA
- Josie Leena, VA
- Maria Zamarripa, VA Interiors
- Dennis Mika, BAE VP of Healthcare Design
- Connor Rollins, BAE Architect
- Vickie Bastin, BAE Project Manager

Meeting Minutes: The purpose of this meeting is for the A/E to present BAE's intent and direction on interior design for the spaces. VA to provide comments to develop areas.

1. **Equipment List/ Infusion follow up**
   - Equipment List
     - BAE to confirm no follow up questions at this time. Josie provided comments on the equipment list. BAE to review list in more detail.
   - Infusion
     - Currently outside of scope and not agreed upon.
     - May be incorporated at some point as a MOD if VA receives directive from ELT for Hines
2. **Dementia Unit**
   - Clean Utility & Clean/ Dirty Linens
     - VA noted that Clean supply will need two (2) critical power outlets.
   - MOD received by BAE

- BAE to separate line item for the Kitchen option on the 6298 per request from VA.
- Vickie commented that revised SOW has been received and commented she will be out of the office on March 12th.
- VA commented proposal can be provided by Friday, March 15th. Vickie will do her best to get the proposal out tomorrow by EOD.

3. **Bariatric Lifts**
   - Clarification between SOW & Bariatric needs
     1. Room layouts designed with bariatric patients in mind.
     2. Ceiling mounted lift system capable of transporting up to 600lbs from bed to toilet room.
     3. Consider additional storage space for bariatric equipment.
     4. Refer to Construction Facility Management (CFM) design criteria for minimum clearances.
     5. Upgrades to flooring, wall protection (wainscotting), window treatments, paint, ceilings, and finishes.
   -
   - BAE met with lift manufacturer to discuss types of lifts.
   - Scope of work calls out for 600 lb lifts, but BAE recommends 800/1000 lb lifts. There would be a slight change in structural supports.
     - VA decides to remain with the 600 lb lifts
4. **"Easy Street" drawings/classification**
   - AHU select
     - BAE will follow up with cost estimation of AHU. Will have an estimate for next week.
5. **Interior Next Steps:** In person presentation with material samples
   - Proposed dates: Friday, March 22, or Monday, March 25th
     - VA decided on Friday, March 25 am – After the meeting adjured it was discovered that this date a time will not work for all VA team members. Meeting rescheduled for March 28 at 9AM.
6. **VA Comments/Questions**
   - No comments or questions at this time.
7. **Project Next Steps**
   - Next Bi-weekly Meeting: March 20th, 2024
   - BAE to submit 60% to third party reviewer ~~03/03/2024,~~ TBD
   - BAE to revise schedule once MOD negotiations are completed.

End of Meeting Notes

This summary constitutes the writer's understanding of the basic matters discussed and the conclusions reached. The participants are requested to review the following and notify Bancroft-AE, of any exceptions, in writing, within ten (10) days of receipt of these meeting minutes. In the absence of such notice, these meeting minutes will be considered accurate.

Copies: BAE Fie | VA Station
Prepared By: Vickie Bastin | BAE PM

3300 Dundee Road | Northbrook, IL 60062
California | Connecticut | Colorado | Florida | Louisiana | Oklahoma | Pennsylvania | Virginia | Wisconsin
847.952.9362 | www.bancroft-ae.com

BANCROFT ARCHITECTS + ENGINEERS

MEETING MINUTES

BANCROFT ARCHITECTS + ENGINEERS

MEETING MINUTES

March 20, 2024

Project: Renovating Portions to Building 217 (CLC)
Location: Edward Hines Jr. Hospital
VA Project: 36C5223C0071
BAE Project: 23-009
Meeting: Weekly VA & A/E Meeting

Meeting Attendees:

- Aaron Walsh, VA COR
- Juan Gayton, VA CO
- Mary Tucker, VA Alt. COR*
- Carol George, VA NFS*
- Candice West, VA*
- Amanda Logan, VA*
- Javier Martinez, VA*
- Josie Leena, VA*
- Maria Zamarripa, VA Interiors
- Dennis Mika, BAE VP of Healthcare Design
- Connor Rollins, BAE Architect*
- Vickie Bastin, BAE Project Manager
- Michael Banas, BAE Mechanical Engineer
- Joevy Ditchella, VA
- Binu Polakkattil, VA
- Mark Jhelo Manalili, VA
- Maria Zamarripa, VA
- Christopher Berger, VA Engineering (HVAC)
- Teresa Carr, VA

Meeting Minutes: The purpose of this meeting is for the A/E to present BAE's intent and direction on interior design for the spaces. VA to provide comments to develop areas.

1. **MOD executed and revised schedule submitted.**
   - Site Visit scheduled for Friday, March 22 with Richard.
   - Meet in CLC at 9:15 am
2. **Storage:**
   - Space required for temp-track (is this wound care storage?)

- VA confirms it is for wound care storage (BAE to check TIL for requirements)
- It will hold sterile supplies
- Any space that is added to the clean supply is taken from the bed storage room
  - Review added utilities for Dementia Unit

3. **"Easy Street" AHU selected, cost estimating on pricing provided on Friday, March 15.**
   - BAE is working through noise concerns with bringing air down & duct locations to minimize obstructing windows.
   - VA to confirm there are no AHU drawings for atrium.
     - If VA has drawings, they will be hard copies
     - VA to follow up and see if files can be found
   - VA to confirm Smoke evacuation to remain as is. Grandfathered at time of infill.
     - VA to follow up and confirm this
   - Easy street has cooling/heating issues
   - BAE raised concerns about how air is being exhausted out of atrium
     - BAE suspects it is only supply going in
     - Return comes directly underneath louvers
     - Mechanic believes it is 100% OA (no return or exhaust). VA will follow up with mechanic confirmation
4. **Interior Next Steps: In person review of finishes with material samples**
   - Working session scheduled for Friday, March 29th @ 9:00 am
5. **VA Comments/Questions**
   - There were rooms that BAE couldn't access during the initial site visit
     - VA will have access to master key and will be able to provide access to any rooms this time around (Friday, March 22nd)
     - COR will reach out to Alvin to see if he is available Friday to join the site visit to address HVAC questions/access.
6. **Project Next Steps**
   - Next Bi-weekly Meeting: April 3rd, 2024
   - BAE to submit 60% to third party reviewer April 16th, 2024

End of Meeting Notes

This summary constitutes the writer's understanding of the basic matters discussed and the conclusions reached. The participants are requested to review the following and notify Bancroft-AE, of any exceptions, in writing, within ten (10) days of receipt of these meeting minutes. In the absence of such notice, these meeting minutes will be considered accurate.

3300 Dundee Road | Northbrook, IL 60062
California | Connecticut | Colorado | Florida | Louisiana | Oklahoma | Pennsylvania | Virginia | Wisconsin
847.952.9362 | www.bancroft-ae.com

Copies: BAE Fie | VA Station
Prepared By: Vickie Bastin | BAE PM

3300 Dundee Road | Northbrook, IL 60062
California | Connecticut | Colorado | Florida | Louisiana | Oklahoma | Pennsylvania | Virginia | Wisconsin
847.952.9362 | www.bancroft-ae.com

BANCROFT ARCHITECTS + ENGINEERS

MEETING MINUTES

BANCROFT ARCHITECTS + ENGINEERS

MEETING MINUTES

March 29, 2024

Project: Renovating Portions to Building 217 (CLC)
Location: Edward Hines Jr. Hospital
VA Project: 36C5223C0071
BAE Project: 23-009
Meeting: Interiors Workshop

Meeting Attendees:

- Aaron Walsh, VA COR
- Juan Gayton, VA CO*
- Mary Tucker, VA Alt. COR
- Maria Zamarripa, VA Interiors
- Amanada, VA
- Connor Rollins, BAE Architect
- Vickie Bastin, BAE Project Manager
- Anna Murray, BAE Interiors

Meeting Minutes: The purpose of this meeting is for the A/E and BAE's to review interior design options for the spaces. The goal of this meeting is to make interior design choices.

Presentation/ Attachment document : 23-009- Hines VA Interiors Review 03292024.pdf

1. BAE provided recapped previous discussion and items previously reviewed and VA interiors standards.
2. Dementia Unit: BAE shared renderings and presented three (3) options with material samples.

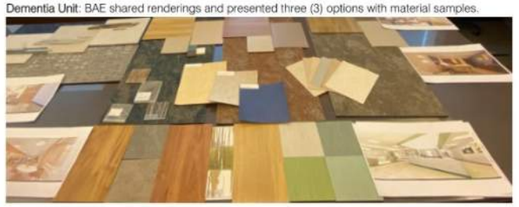

a. General Comments:
   i. Kinetex Carpet: VA concerned on how a wheelchair would roll or patient shuffling feet. The carpet is more of a composite material than a traditional carpet.
   ii. Yellow wall covering: VA concerned that the color yellow tends to excite and tends to avoid this color.
   iii. Bathroom proposed sheet vinyl: VA concern that TIL dictates porcelain tile.
   iv. 3 Form Wall: BAE proposed renderings show full sheet hanging pieces.

   v. VA concerned about the "shadow" affect Veterans will experience. VA requested a ½ wall and clearer Lumicor panel .
   vi. BAE commented on the options are endless for the opacity and material.

b. VA Selection" Option 3 with Green Carpet with a few revisions

   I. After looking at samples VA would like to see another option for the desk base. Currently it is shown as SS-3. BAE to look at other options that are more cream color.
   II. VA concerned bathroom glass tile can look dated quickly.
   III. VA selected light walnut cabinets
   IV. Benjamin Moore door frame color to be CSP-240 Brownstone

   V. Column Covering 629 Linen
   VI. Lumicor Selected: Cattail
   VII. Area in nutrition area will need to be LVT due to food being served in the area.
   VIII. Counters in patient rooms should be a color between the light and dark Solid surface presented.
   IX. Picture of material selected:

3. Primary Care and Entrance
   a. General Comments:
      i. VA commented on providing new VA logo
      ii. VA likes the glass in for check in area.
      iii. Column in lobby area needs to be protected and not just paint.
      iv. Currently VA has blue/green in lobby area, VA is not a fan of the proposed Granny Smith green & green SS-1 Corian counter selected. VA likes the Monstera color.
      v. VA would like to have a more "walnut' flooring. VA would like to see a flooring color similar to the printed renderings. VA aware of the flooring in the lobby area is the same flooring throughout the CLC (CLIN 2).
   b. VA preferred option 2 separating the clinic and provider space with reducing the amount of flooring colors used.
      i. VA prefers to move the single line on the floor and move the double line to the other side of the hallway.

BANCROFT ARCHITECTS + ENGINEERS

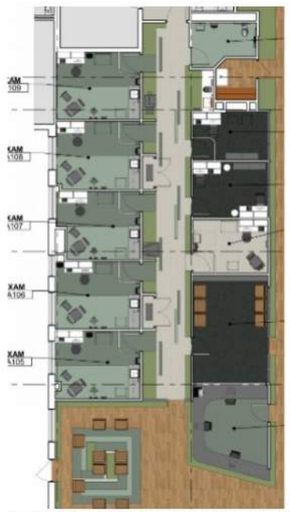

ii.
iii. VA likes the floor design using the flooring colors in the front entrance waiting area.
iv. BAE confirmed the bathroom selections will be the same as the patient rooms.

4. Easy Street
   a. General comments:
      i. Fractal acoustic sound panels shown in renderings is the "wave" pattern. VA commented the designs on the acoustic panels are overwhelming. VA would like to have fractal acoustic panels where there are only 2 panel high and on the other wall a solid matching panel.
      ii. Baffles: VA concerned with material. Typically felt products are a concern for FMS and cleaning.
      iii. VA looking to minimize items hanging over the Veterans head. VA thinks what is shown has too many shapes. They would like to see something more purposeful with the possibility of integrated lightening.
      iv. Flooring: Per VA no carpeting. LVT tiles preferred with the square pattern that has two tones. VA concerned about wheelchair & human fluids.

v.
vi. VA comment on the shown furniture and requested that moving forward to show folding chairs to more accurately reflect what will be purchased.

5. Dinning
   a. General Comments
      i. VA likes the look of the wood soffit
      ii. VA commented that rich red shown as proposed color is not an option. The color red is not allowed to be used in VA.
      iii. BAE & VA reviewed paint colors but could not find a blue paint color that would go with stone flooring. VA to provide blue paint color selection.

End of Meeting Notes

This summary constitutes the writer's understanding of the basic matters discussed and the conclusions reached. The participants are requested to review the following and notify Bancroft-AE, of any exceptions, in writing, within ten (10) days of receipt of these meeting minutes. In the absence of such notice, these meeting minutes will be considered accurate.

Copies: BAE Fie | VA Station
Prepared By: Vickie Bastin | BAE PM

3300 Dundee Road | Northbrook, IL 60062
California | Connecticut | Colorado | Florida | Louisiana | Oklahoma | Pennsylvania | Virginia | Wisconsin
847.952.9362 | www.bancroft-ae.com

MEETING MINUTES

BANCROFT ARCHITECTS + ENGINEERS

MEETING MINUTES

April 3, 2024

Project: Renovating Portions to Building 217 (CLC)
Location: Microsoft Teams Meeting
VA Project: 36C5223C0071
BAE Project: 23-009
Meeting: Weekly VA & A/E Meeting

Meeting Attendees:

- Aaron Walsh, VA COR
- Juan Gayton, VA CO
- Mary Tucker, VA Alt. COR*
- Carol George, VA NFS*
- Candice West, VA*
- Amanda Logan, VA*
- Javier Martinez, VA
- Maria Zamarripa, VA Interiors*
- Dennis Mika, BAE VP of Healthcare Design*
- Connor Rollins, BAE Architect
- Anna Murray, BAE Architectural Designer
- Vickie Bastin, BAE Project Manager
- Brent Setar, BAE Project Manager
- Michael Banas, BAE Mechanical Engineer*
- Raed Hamid, BAE Mechanical Engineer
- Robert Bishop, BAE Mechanical Designer
- Joevy Ditchella, VA*
- Binu Polakkattil, VA*
- Mark Jhelo Manalili, VA*
- Christopher Berger, VA Engineering (HVAC)*
- Teresa Carr, VA*
- Katrina Haynes, VA
- Leena Jose, VA

Meeting Minutes: The purpose of this meeting is for the A/E and VA to discuss various concerns and issues that can potentially affect the project scope, performance, and timeline.

1. **Storage:** BAE provided proposed storage drawings to VA on 3/29 and proceeding with layout.

2. **"Easy Street" AHU selected, cost estimating on pricing provided on Friday, March 15.**
   - It may not actually qualify as an atrium, could be a "two story opening with partial enclosure"
     - Must be 100% exhausted and supplied if classified as an Atrium
     - VA to find someone in HEFP to talk with to determine this ASAP
       - BAE to provide photos of space to VA to show to HEFP
   - VA to confirm there are no AHU drawings for atrium.
   - VA to confirm Smoke evacuation to remain as is. Grandfathered at time of infill.
     - VA to review internally and consult/ request meeting with Booz Allen
       - VA spoke to Booz Allen, decision will come down to local governing authority
     - If VA requires BAE to modify space to add smoke evacuation, modification is needed
3. **BAE concern with inoperable fans**
   - Per Alvin, many exhaust fans were not on and not working during our site visit on 3/22.
     - Alvin was not sure why the fans were not on/not working
     - Problem areas: Bathrooms, soiled utilities, etc.
   - BAE reviewing how this will affect areas of work.
   - If adding new exhaust fans, connected areas will have to be attended to as well
   - BAE to provide VA list of all fans that are off/nonfunctional:
     - VA to review and determine if fans can be replaced
     - EF 04: Status-Off. We will be removing the toilets 1A041 & 1A042 for the new Corridor. 270 CFM not used. If functioning, cap ends and rebalance other ducts.
     - EF 06: Status-Off. Feeds 3 rooms, we will be doing work with one, 1A112, adding 40 CFM. If functioning, rebalance all ducts.
     - EF 08: Status-Off. We will be working in over half the rooms on this Exhaust Fan in the Dementia wing. New Exhaust Fan, Roof curb, and ductwork for this area and rebalance at main duct for existing area.
     - EF 09: Status-Removed. We will be working in area 1B135, 1B146, 1B147 (area serviced), behind the Nursing Station in the Dementia wing as part of new scope. Determine CFM, Ductwork needed in new scope.
     - EF 10: Status-On. We will be working in area 1B143, 1B145, (area serviced), behind the Nursing Station in the Dementia wing as part of new scope. Determine CFM, Ductwork needed in new scope.
     - EF 11: Status-Off. We will be working in all the rooms on this Exhaust Fan in the Dementia wing. New Exhaust Fan, Roof curb, and ductwork for this area.
     - EF 13: Status-Off. We will be working in the rooms 1C104, 1C105, 2C04, and 2C05 on this Exhaust Fan. If functioning, check duct size, rebalance all ducts.
     - EF 14: Status-Off. We will be working in the rooms 1C148, 1C149, 2C248, and 2C249 on this Exhaust Fan. If functioning, check duct size, rebalance all ducts.
     - EF 17: Status-Off. We will be working in the rooms 1C178, 1C179, 2C78, and 2C79 on this Exhaust Fan. If functioning, check duct size, rebalance all ducts.

3300 Dundee Road | Northbrook, IL 60062
California | Connecticut | Colorado | Florida | Louisiana | Oklahoma | Pennsylvania | Virginia | Wisconsin
847.952.9362 | www.bancroft-ae.com

4. **Interior Next Steps:**
   - BAE & VA working on the below items. BAE will be updating room finishes legend and schedule that have been selected.
   - BAE to update future modeling to reflect interior selections.

   Interior selections to be made:
   - VA approval on welded sheet vinyl for residential bathrooms
   - VA to provide Flooring selection for "Easy Street"
   - VA to provide Wall color for Dining Room
   - BAE to provide to select a different solid surface for the base of the desks & solid surface for residence rooms built-ins
   - BAE to change a couple of LVT tones & "wood" LVT in Entry/ Clinic
   - Tiles for bathroom floor in public spaces. Potential size is 8x36 inches. VA to confirm this is acceptable
5. Invoice Questions: BAE submitted invoice to VA on March 23, 2024
   - VA to review and discuss with Vickie if there are any items in question.
6. VA Comments/Questions : none at this time
7. Project Next Steps
   - Next Bi-weekly Meeting: April 17th : Meeting will be after 60% submittal. Would VA like to keep meeting?
     - Per VA we will probably need to meet next week once the "easy street: AHU classification is determined & information on the fans is provided. The meeting on the 17th will probably be cancelled.
   - BAE to submit 60% to third party reviewer April 16th, 2024

End of Meeting Notes

This summary constitutes the writer's understanding of the basic matters discussed and the conclusions reached. The participants are requested to review the following and notify Bancroft-AE, of any exceptions, in writing, within ten (10) days of receipt of these meeting minutes. In the absence of such notice, these meeting minutes will be considered accurate.

Copies: BAE Fie | VA Station
Prepared By: Vickie Bastin | BAE PM

3300 Dundee Road | Northbrook, IL 60062
California | Connecticut | Colorado | Florida | Louisiana | Oklahoma | Pennsylvania | Virginia | Wisconsin
847.952.9362 | www.bancroft-ae.com

BANCROFT ARCHITECTS + ENGINEERS

MEETING MINUTES

BANCROFT ARCHITECTS + ENGINEERS

MEETING MINUTES

June 12, 2024

Project: Renovating Portions to Building 217 (CLC)
Location: Microsoft Teams Meeting
VA Project: 36C5223C0071
BAE Project: 23-009
Meeting: VA & A/E 60% Review Meeting

Meeting Attendees:

- Aaron Walsh, VA COR
- Juan Gayton, VA CO
- Javier Martinez, VA
- Andrea Bial, VA
- James Engstrom, VA
- Christopher Jay, VA
- Rhonda Townsend, VA
- Camille Ward, VA
- Noah Cameron, VA
- Lenna Jose, VA
- Candance West, VA
- Leena Jose, VA
- Salman Ali, VA
- Peter Mathis, VA
- Binu Polakkattil, VA
- Dennis Mika, BAE VP of Healthcare Design
- Connor Rollins, BAE Architect
- Vickie Bastin, BAE Project Manager

Meeting Minutes: The purpose of this meeting is for the A/E and VA to review VA comments from the 60% submittal.

1. VA commented that during the next phase VA will have to decide on what areas of work will go to construction and what area will be bid deducts based on the budget.
   a. BAE to identify what parts of the project will be reliant on each other.
   b. BAE commented bid deducts and phasing will go hand in hand. BAE commented a meeting should be set up to review phasing so we are on the same page

2. Noise: the building is occupied 24 hours so it may not make sense to do the noise construction items on after hours.
3. ICRA: VA spoke to infection control and clarified classification is to be considered class IV
4. G228: leveling of floors, VA is commented on excess leveling of floors in other projects and would like to try an avoid this.
   a. VA asked if there is anything we can do to mitigate the unknow cost. VA asked if there is a way to check on fill.
   b. BAE commented there maybe some survey equipment that can assist with this. BAE to discuss internally and see if there are solutions on how to address this.
5. Lockers are getting removed, VA called out there shall be some finishing work like repair/replace drywall missing and shall be required to be added moving forward.
6. Dementia Unit: VA asked Users if they wanted the glass wall removed.
   a. Per Dr. Mathis it may look better to remove the glass. VA to review and may change if they would like to have the glass remain
7. Windows: VA asked if windows are being replaced, drawings are unclear.
   a. Per BAE Windows are remaining , just replacing sills.
8. ADP.20 Demoing ½ the wall, there are some graphic that need to be addressed in the drawings. BAE clarified the dry wall removed corner to corner.
9. Note 49: General Note to be added contractor responsible to relocate furniture for non clinical requirement and contractor needs to provide storage.
   a. BAE commented a note will be added to store items by phase
10. AD 401.10 Car: VA asked how is the car getting out? VA shared that was brought into the building in three (3) pieces.
    a. Therapy doesn't use the Car but uses the Veteran personal car for therapy reasons.
    b. Lisa Edmonds is the point of contract to address the car. VA to follow up with Lise to determine what can be done with the car.
    c. Per BAE once the VA know what they want to do the car, BAE & VA can review to add proper notes to the drawings.
11. A104: VA has questions on symbols.
    a. BAE acknowledges that there is some coordination that needs to be cleaned up. VA was questioning what was going or demo' d
12. Circle F symbol: VA asked what that was? BAE will have to review.
13. TR Closet: EHRM project is not going to be done based on funding issues. At this point this will be a blank box. VA asked how hard will it be to complete drawings in this space.
    a. Per Richard EHRM maybe potentially happen but don't know timelines.
    b. COR we will have to keep it as is for now and proceed to 90% if something changes at 90% it will have to be a mod.

14. WAPS: Per Noah, the WAPS have been relocated in many areas on the campus, not sure on 217. Per BAE these locations are based on site surveys so they should be relatively close.
    a.
15. ACD401.4 should read ACD401.5 for the second note. Error on VA review comments spreadsheet.
16. Storage room 1B145: VA questioned if this room is still needed. Per VA phones in elevators are analog, patient phones may run through this closet.
    a. VA to review if we can absorb this space or if it has to remain.
17. VA asked what is DAS= DAS System VA requested to have same note as WAPs.
18. Ceiling Tiles: VA commented that where there is partial demo of tiles in any area, replace all ceiling tiles.
19. Atrium Windows: VA asked about the conditions of the windows.
    a. BAE commented that nothing was noted during the site inspection or signs replacement would be required.
20. Pre- Tab: Richard asked about pre-Tab report, so we knew the baseline of the air flows prior to construction.
    a. BAE commented a pre-tab was not budgeted for during DPS.
    b. COR asked if the contractor can do pre-tab so they know the baseline prior to construction. So we did not have to mod the design contract
21. AE401.2 – Flow of food delivery discussion: Candice from Food Services

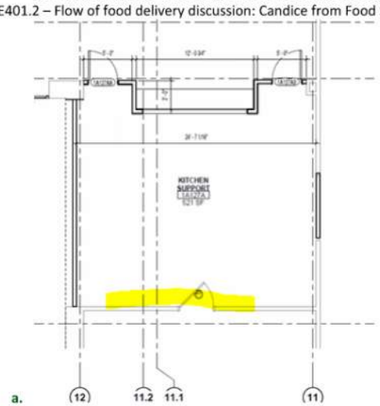

a.
b. Per Candice the door can only be used for clean. Per Canadice there are more steps to take now.

BANCROFT ARCHITECTS + ENGINEERS

c. COR commented that door with alcove has been removed and we can add the door
d. Candice is concerned about the flow and retraining of patients. Candice thinks the door in the kitchen support is not ideal.
e. VA asked if the nearby hot bar if there can be dirty trays?
   i. Per infection control there needs to be a separation between clean and dirty even if it is a half wall for the dining room.

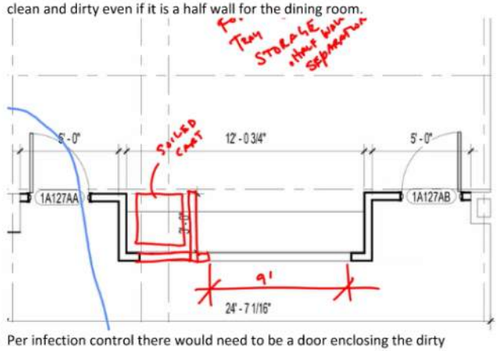

   ii.
   iii. Per infection control there would need to be a door enclosing the dirty trays. The dinning room is considered a clean space and dirty trays cannot be stored in the dinning room. "Dirty" items have to be separated from clean areas.
   iv. Per Candace nurses should not be kitchen support, so the dirty cart storage should not be in the support space.

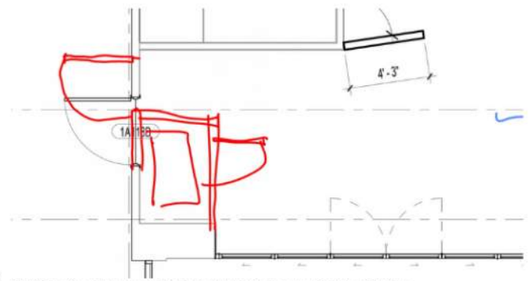

   v.
   vi. Per Candice only one dirty cart storage is needed in the dinning room.
   vii. Candice explained how all carts right now come through the dinning room to get scraped. Dennis proposed bringing the door back in the kitchen support to route dirty carts so they would not have to go through the dinning room.
   viii. Candance, VA and BAE to meet between now and 90% to solidify location for dirty cart storage
22. Easy Street: Per Aaron one of the easy street retractable doors have to be an exist so cannot be a retractable wall door.
23. Easy Street: Dr. Ali asked about how dark can the room get? The concern seeing the projector with the amount of light in the room.
   a. Denis commented that the skylight creates a challenge and will need to work out the details.
   b. VA called out to ensure the project and ceiling baffles logistic work out.
   c. VA asked about the proposed lights/ baffles. Per BAE is still working on working on those but the VA likes the concept of the baffles with lights.
   d. Per Dr. Ali what he is seeing is fine as their needs something to block the light and create a "ceiling"
24. Lighting in storage in easy street: BAE is currently showing lighting on cabling but may need to look at wall mount

25. Patio: BAE proposing pedestal mounting compost material. The water would drain underneath to existing drain, the existing floor would get refinished.
   a. VA asked what the DN box is?
      i. BAE stated that is a Revit issue but noting that ramp.
   b. Dr. Ali asked if the proposed floor is wheelchair friendly. BAE to double check

26. 1B163: VA asked if that room was not going to be ADA compliant. Per BAE the bathroom still meets ADA compliance, and the shower is 4x4
27. Dementia Unit: Dr Ali asked about the number of patient rooms.
   a. Per BAE there are 11 rooms, 1 room had to be taken for solid and clean
28. VA commented BAE needs to clean up legend and ensure all symbols are noted.
29. Big VA concerned that colors were not timeless. BIG VA is National.
   a. BAE commented on concern regarding the number of changes from the interior selection made during the interiors meeting prior to the 60%. Wall colors were changed and no direction on placement or where they were going.
   b. Dennis shared the concern about light reflectance value and if that was taken into consideration when the color selection was changed.
      i. Contracting had to drop off the call and BAE requested to discuss the additional work effort later today during our bi-weekly meeting.
   c. VA asked about accent walls in exam room. VA thinks an accent wall is now required for exam rooms.
30. Vending: Per legionella diamond plating had to move with the vending. Need to finalize location for vending.
31. Rendering: VA asked for an updating rendering for entry way and dementia unit patient entrance showing memory boxes.
32. VA Commented on missing sprinkler heads in areas. Easy Street is going to be a big one that needs to be addressed.
33. VA asked BAE to confirm if the redhibitory/ easy street are live. If they are live we would need to note the demo on our drawings.
34. Mechanical: VA asked if the existing diffuser are going to get reused: Per BAE not sure.
35. VA asked if there is any demo for mechanical on first floor? BAE to confirm.
36. BAE commented that there is some above ceiling work to be done and reusing some of the ducts.
   a. VA commented we will go over controls at the 90% in more detail.
37. OIT wants to review drops and outlets at the 90%. Per VA if we are adding drops and outlets, they would like to know the number of outlets added.
38. VA requested to review the specs of the decking, baffles and drop lighting.
39. VA asked for response to comments to discuss and make sure we are on the same page for 90%. – BAE to provide as soon as possible.

End of Meeting Notes

3300 Dundee Road | Northbrook, IL 60062
California | Connecticut | Colorado | Florida | Louisiana | Oklahoma | Pennsylvania | Virginia | Wisconsin
847.952.9362 | www.bancroft-ae.com

3300 Dundee Road | Northbrook, IL 60062
California | Connecticut | Colorado | Florida | Louisiana | Oklahoma | Pennsylvania | Virginia | Wisconsin
847.952.9362 | www.bancroft-ae.com

MEETING MINUTES

This summary constitutes the writer's understanding of the basic matters discussed and the conclusions reached. The participants are requested to review the following and notify Bancroft-AE, of any exceptions, in writing, within ten (10) days of receipt of these meeting minutes. In the absence of such notice, these meeting minutes will be considered accurate.

Copies: BAE Fie | VA Station
Prepared By: Vickie Bastin | BAE PM

3300 Dundee Road | Northbrook, IL 60062
California | Connecticut | Colorado | Florida | Louisiana | Oklahoma | Pennsylvania | Virginia | Wisconsin
847.952.9362 | www.bancroft-ae.com

BANCROFT ARCHITECTS + ENGINEERS

MEETING MINUTES

BANCROFT ARCHITECTS + ENGINEERS

MEETING MINUTES

June 12, 2024

Project: Renovating Portions to Building 217 (CLC)
Location: Microsoft Teams Meeting
VA Project: 36C5223C0071
BAE Project: 23-009
Meeting: Bi-Weekly VA & A/E Meeting

Meeting Attendees:

- Aaron Walsh, VA COR
- Juan Gayton, VA CO
- Vickie Bastin, BAE Project Manager
- Brent Setar, BAE Project Manager
- Anna Murray, BAE Interior Design

Meeting Minutes: The purpose of this meeting is a follow-up from this morning's page- turn to discuss the Interior Design changes and concerns.

1. Interiors Discussion
   a. BAE expressed the surprise to see the amount of changes on the 60% VA comments to interiors selections from the interiors meeting (March 29).
   b. VA explained that the Interior National or overseeing entity provided comments on the interiors selection previously selected that selections were not timeless.
   c. BAE will have added work effort to schedules, drawings and renderings to incorporate new interior selections.
   d. There are still some interior items that the VA and BAE need to discuss but the direction is unclear due to the new selections.
      i. VA shared the VA ID is out of the office this week.
   e. VA stated that all of the flooring is completely changing, and the Users did not decide to move forward with what was decided at the interiors meeting.
   f. VA is undecided on selection of solid surface base.
   g. All these changes will cause extra work effort for BAE
   h. The most impactful changes are:
      i. Gathering new samples
      ii. Flooring changes
      iii. Additional Wall Bases / Column Covers

      i. 60% VA comments had many new paint colors, VA to notify BAE needs where these new paint colors are to go.
2. Next steps
   a. BAE to send VA COR brief email stating what has changed that will cause additional work effort.
   b. VA to discuss changes internally and follow up with BAE within 1 week.

End of Meeting Notes

This summary constitutes the writer's understanding of the basic matters discussed and the conclusions reached. The participants are requested to review the following and notify Bancroft-AE, of any exceptions, in writing, within ten (10) days of receipt of these meeting minutes. In the absence of such notice, these meeting minutes will be considered accurate.

Copies: BAE Fie | VA Station
Prepared By: Vickie Bastin | BAE PM

3300 Dundee Road | Northbrook, IL 60062
California | Connecticut | Colorado | Florida | Louisiana | Oklahoma | Pennsylvania | Virginia | Wisconsin
847.952.9362 | www.bancroft-ae.com

BANCROFT ARCHITECTS + ENGINEERS

MEETING MINUTES

BANCROFT ARCHITECTS + ENGINEERS

MEETING MINUTES

June 26, 2024

Project: Renovating Portions to Building 217 (CLC)
Location: Microsoft Teams Meeting
VA Project: 36C5223C0071
BAE Project: 23-009
Meeting: VA & A/E 60% Review Meeting

Meeting Attendees:

- Aaron Walsh, VA COR
- Dennis Mika, BAE VP of Healthcare Design
- Connor Rollins, BAE Architect
- Anna Murray, BAE Interior Design / Architect
- Vickie Bastin, BAE Project Manager
- Brent Setar, BAE Project Manager
- Philip Chiaramonte, VA Rehab
- Lisa Edmonds, VA Rehab
- Maria Zamarripa, VA

Meeting Minutes: The purpose of this meeting is for the A/E and VA to review VA comments from the Interiors Changes.

1. **Rehab**: New Business
   - *Increase storage space in multipurpose room / reallocate square footage*
     - *VA wants to extend south wall / extend A/V area to the width of the room. It is currently a partial wall that has no ceiling*
     - *Arts and crafts, games, tables on wheels, musical instruments would be among the things stored*
     - *VA expresses concern regarding high value items that they store subject to being stolen. Want to make the connecting wall as high as possible as a preventative measure.*
     - *BAE states that there cannot be a ceiling or slanted wall due to dust collection*
     - *Per VA, theft is a big issue and should be considered during design.*

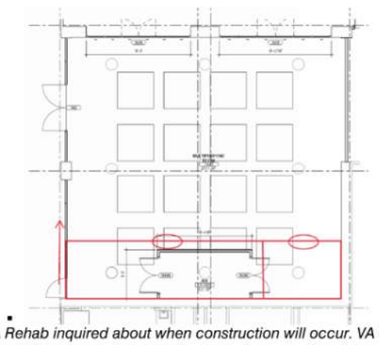

- *VA Rehab inquired about when construction will occur. VA COR stated that it may take a couple years due to funding issues.*
- *VA Rehab desires to demolish the metal cabinet behind fridge. VA will create a work order.*
- *BAE to discuss internally and revise drawing with above changes and provide to VA*

2. **Interiors:** How to proceed to 60%.
   - *VA Does want to proceed with the red lines they made, they just need to work out what additional effort that entails*

- Flooring Follow-Up
  - Per last meeting, LVT-1, LVT-2, LVT-4, LVT-5, LVT-6, LVT-8, and LVT-9 are all changing from what was previously submitted and agreed upon. The VA team was not happy with them, and there was direction to use more neutral tones.
  - A/E to select a neutral color for LVT-5 based on LVT1-4 selections; to be approved by VA.
- Door Frame Paint
  - VA selected final door frame color in 60% comments to be Foothills 7514 SW.
- Column Covers
  - VA is looking at options for main entry based on new LVT selections.
  - *Column covers was selected*
- Porcelain Tile and Solid Surfaces
  - VA ordered and reviewed samples for all 3 notorious and penthouse tiles and did not like them. A/E to provide samples based on other selections and the wall paint colors.
  - *Porcelain tile and solid surface was never selected*
  - *BAE is still unsure how to proceed with solid surfaces. They still must be picked by the VA*
  - *BAE expressed confusion on some redline comments. VA still wants solid surface for base, no wrapping base in laminate. Wants to see samples based on other finishes. VA confirms that BAE is still putting solid surface on base of entry desk in reception. Waiting for solid surface samples.*
  - *Everything has been selected for dementia unit.*
  - No Mosaic Tiles.
- Lumicor Panels for Dining
  - A selection of Whisper Varia Sandstone F01,1009331 was made based on the VA ordering samples and reviewing
- Samples/colors for acoustical panels in Easy Street
- Kitchen support HP flooring
- Ceiling baffle samples
- Wall protection and handrail plan w/ samples
- Wayfinding Details
  - The wayfinding signage follows the TIL colors on Page 820 at: cfm.va.gov/til/dManual/dmSignage.pdf
- *Design needs to be complete by July 12th to go to 3rd party reviewer. BAE expresses concern with the rework in such a short amount of time. VA asks, if possible, to get samples to them by July 3rd. BAE states that will be difficult to accomplish. BAE to discuss internally and see how quickly it can be done.*
- *Philip to provide photos of shelving and what the VA desires to be changed*

3. **ACM/ Asbestos/ IH**
   - *BAE to NOT proceed with ACM / Asbestos testing. VA states it is not necessary.*
   - *BAE needs it descoped from VA contracting so the money will be credited back to the VA*

4. **Invoice Questions:**
   - Invoice 7 submitted to VA on Monday, June 24 – Questions
     - *VA COR to review and approve*

5. **RFP CLIN 3:**
   - Area in SOW: ALL exterior rooms (stairwells, mechanical rooms) or only patient rooms.

3300 Dundee Road | Northbrook, IL 60062
California | Connecticut | Colorado | Florida | Louisiana | Oklahoma | Pennsylvania | Virginia | Wisconsin
847.952.9362 | www.bancroft-ae.com

BANCROFT ARCHITECTS + ENGINEERS

- *VA confirms ALL exterior rooms except elevators*
- *BAE asked about Dental Lab on Floor 1*
  - *VA to check what that room actually is and follow up with BAE*
- Broken Equipment (radiators/ faucet sensors)
  - *If there is broken equipment before construction, VA will put in a work order. If broken after construction, VA to make contractor pay.*
  - *BAE to do a thorough survey and document current conditions.*
- RFC #8 conflicts with SOW
  - *VA states to do 2 feet for now. He will double check and get back to BAE with confirmation.*
- *BAE to finish Proposal and provide to VA by End of Day 6/27*

6. VA Comments/Questions

7. Project Next Steps

- Next Bi-weekly Meeting: July 10th
- 90% Submittal to 3rd party Friday, July 12th
  - *Likely to be pushed back, but for now it stays July 12th*
- *BAE to provide meeting minutes to contracting and email recap of contract changes requested for approval.*

End of Meeting Notes

This summary constitutes the writer's understanding of the basic matters discussed and the conclusions reached. The participants are requested to review the following and notify Bancroft-AE, of any exceptions, in writing, within ten (10) days of receipt of these meeting minutes. In the absence of such notice, these meeting minutes will be considered accurate.

Copies: BAE Fie | VA Station
Prepared By: Vickie Bastin | BAE PM

MEETING MINUTES

BANCROFT ARCHITECTS + ENGINEERS

MEETING MINUTES

July 10, 2024

Project: Renovating Portions to Building 217 (CLC)
Location: Microsoft Teams Meeting
VA Project: 36C5223C0071
BAE Project: 23-009
Meeting: VA & A/E Bi-Weekly Project Meeting

Meeting Attendees:

- Aaron Walsh, VA COR
- Juan Gaytan, VA CO
- Anna Murray, BAE Interior Design / Architect
- Vickie Bastin, BAE Project Manager
- Brent Setar, BAE Project Manager
- Philip Chiaramonte, VA Rehab
- Lisa Edmonds, VA Rehab
- Maria Zamarripa, VA
- Leena Jose, VA

Meeting Minutes: The purpose of this meeting is for the A/E and VA to discuss various concerns and issues that can potentially affect the project scope, performance, and timeline.

1. **Rehab**
   - BAE provided VA proposed Rehab Storage sketch on 7/2/24
     - Space will require a ceiling which will create need for area to be cooled and heated
     - *VA looked at sketch and states that it is fine, but the only issue is the ceiling. VA to look into getting waiver, but have not heard anything yet from VACO.*
       - *BAE needs response from VACO before starting to design ceiling*
     - *Per VA, everything except the ceiling is approved*
   - Targeted submittal date of 8/2/24 is reliant on the Rehab Storage being approved by the VA ASAP
   - *VA to determine internally what would be the additional work needed to design the kitchenette area, and whether it would require a MOD.*

2. **NFPA Section and Furniture CAD**
   - BAE provided CAD plans on 7/3/24 per VA's request. BAE noted sections of NFPA 101 that require the storage area to be smoke rated.
     - VA noted that the room must be larger than 50 ft^2 and be used to store combustible supplies/equipment in quantities deemed hazardous by the JHA
       - BAE stated that VA would need to get approval by the jurisdiction with authority to waive having the room rated. A narrative maybe needed to describe what will be stored or the authority with jurisdiction maybe open to other solutions like providing additional lower sprinkler heads to avoid the ceiling on the storage room.

3. **Interiors**
   - BAE incorporating interiors changes
     - BAE estimates these efforts shall take approximately 3 weeks and a targeted submittal date of 8/2/24
   - BAE updating Revit model
   - BAE updating 90% drawings
   - *Per VA, requesting the addition for a wall covering in hallways. The more protection is better for these areas*
   - *Per VA, we need bumpers, corner guards, and wall protection sheet*
     - *VA wants to include wall protection from where handrail starts all the way down to the wall base*
     - *In below image, from dashed red line all the way down to the wall base*

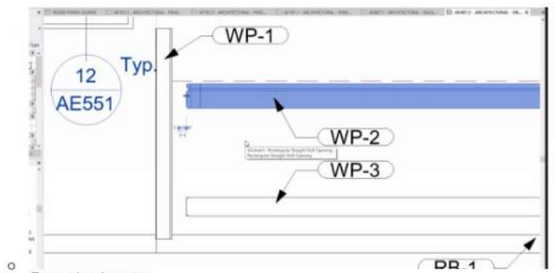

- *Example pictures:*

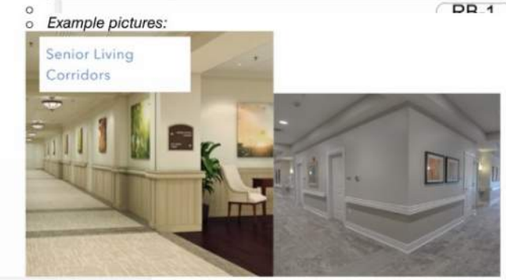

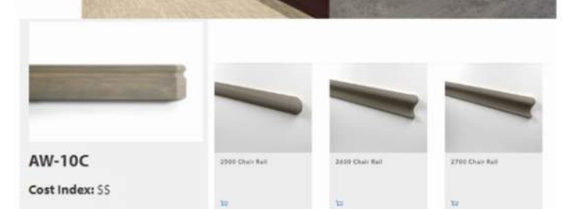

- *The idea is to make the space cozier and more residential. Less institutional.*
- *None of these ideas have been approved by infection control. BAE states they must be approved before continuing with the ideas*

BANCROFT ARCHITECTS + ENGINEERS

- IS/SD: $9,975.00
- CD: $1,050.00
- DD: $2,200.00
- Total: $13,225.00

- VA to send formal credit MOD for $13,225

5. **Invoice Questions:**
   - Invoice 7 submitted to VA on Monday, June 24- Paid on July 8th

6. **Schedule Change**
   - New proposed 90% submittal date of 8/2/24 due to interior changes

7. **VA Comments/Questions**

8. **Project Next Steps**
   - Next Bi-weekly Meeting: July 24th
   - *BAE to send samples to VA (~3 day timeline), which puts interiors a week away from final decisions. BAE raises concerns that this is not enough time to submit on the 12th*
     - *BAE and VA to schedule meeting in the morning on July 11th*
   - *Items BAE needs from VA*
     - *Decision on rehab ceiling from VACO*
     - *Decision on rehab kitchenette area*
     - *Approval from infection control on bumpers, corner guards, and wall protection choices*
     - *Selection of laminate in primary care area*
     - *Decision from EMS on shower curtains*
   - *Items VA needs from BAE*
     - *Samples of bumper, handrail, and corner guard for review*
     - *Patio on second floor sample*
     - *Kitchen support area porcelain tile samples*
     - *Selections and samples of flooring for dining area*
     - *Sample of grass-looking lumicore*

End of Meeting Notes

This summary constitutes the writer's understanding of the basic matters discussed and the conclusions reached. The participants are requested to review the following and notify Bancroft-AE, of any exceptions, in writing, within ten (10) days of receipt of these meeting minutes. In the absence of such notice, these meeting minutes will be considered accurate.

Copies: BAE Fie | VA Station
Prepared By: Vickie Bastin | BAE PM

3300 Dundee Road | Northbrook, IL 60062
California | Connecticut | Colorado | Florida | Louisiana | Oklahoma | Pennsylvania | Virginia | Wisconsin
847.952.9362 | www.bancroft-ae.com

BANCROFT ARCHITECTS + ENGINEERS

B

Appendix

- Interior finish review and selections from March 29th, 2024

BANCROFT ARCHITECTS + ENGINEERS

Supportive Environments for Dementia Residents

Much has been written about designing environments for patients with Dementia and there is solid evidence that the built environment impacts the psycho-social-emotional well-being and probably physical health of individuals with dementia.

A white paper published by the Alzheimer's Foundation of America in 2014 really set the initial foundation for interior designers in creating environments specifically for patients with this neurological disorder and are highlighted below.

- Minimize over stimulation
- Introduce familiar settings.
- Introduce wayfinding as part of design

Research has shown family plays an important role in the healing process in all clinical settings and similarly for a patient with Dementia families can play an important supportive role. Patient rooms and public areas should be designed for both patients and their families, providing extra seating or destinations for a quiet walk. The kitchen the heart of a residential unit becomes an important hub for both patients and their families to prepare a meal or have a snack or just to enjoy one's company.

Agenda:

- Station finish standards and new resident room furniture updates/ mock-up status
- Patient rooms finishes/lighting-balance between traditional and modern
- Dementia Unit overall finishes
- Primary Care Unit and Building 217 Main Entry/Reception enclosure
- Multipurpose Room
- Easy Street/Atrium Space
- Dining Room

Things to Review:

- Integration of biophilia within the space
- Fractals and the studies behind healing the mind and healing the body
- What we want to achieve for patients and their families
- Developing beautiful spaces that heal

Hines VA Station Standards — Flooring/Paint Patient Room

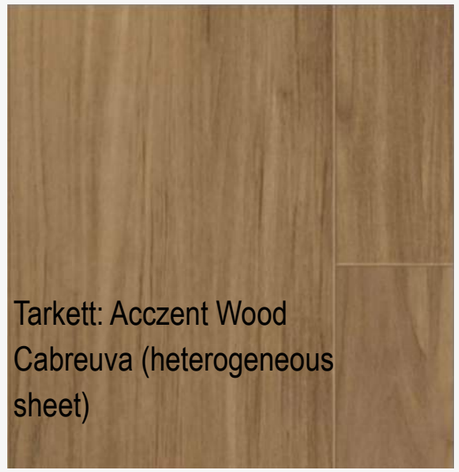

Tarkett: Acczent Wood Cabreuva (heterogeneous sheet)

Johnsonite Inflection 5.25”- 47 Brown

Alabaster—Mapei

Daltile Calgary- Legacy Matte

Base: SW 7567 Natural Tan

Accent: SW 6255 Morning Fog

Frame: SW 7514 Foothills

BANCROFT ARCHITECTS + ENGINEERS

Hines VA Furniture Finishes and Selections

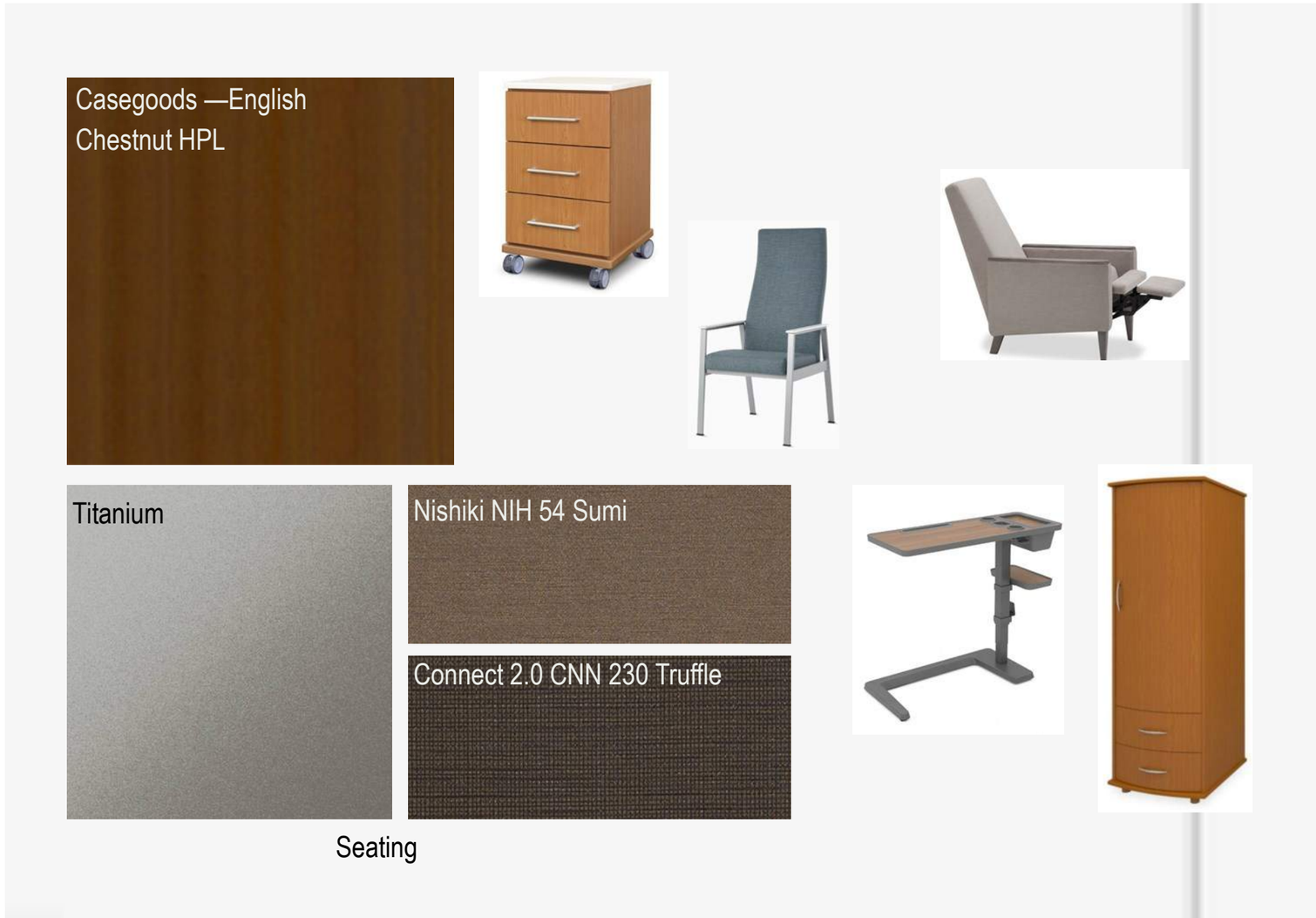

Resident Room Renderings

TYPICAL DEMENTIA UNIT RESIDENT ROOM RENDERINGS

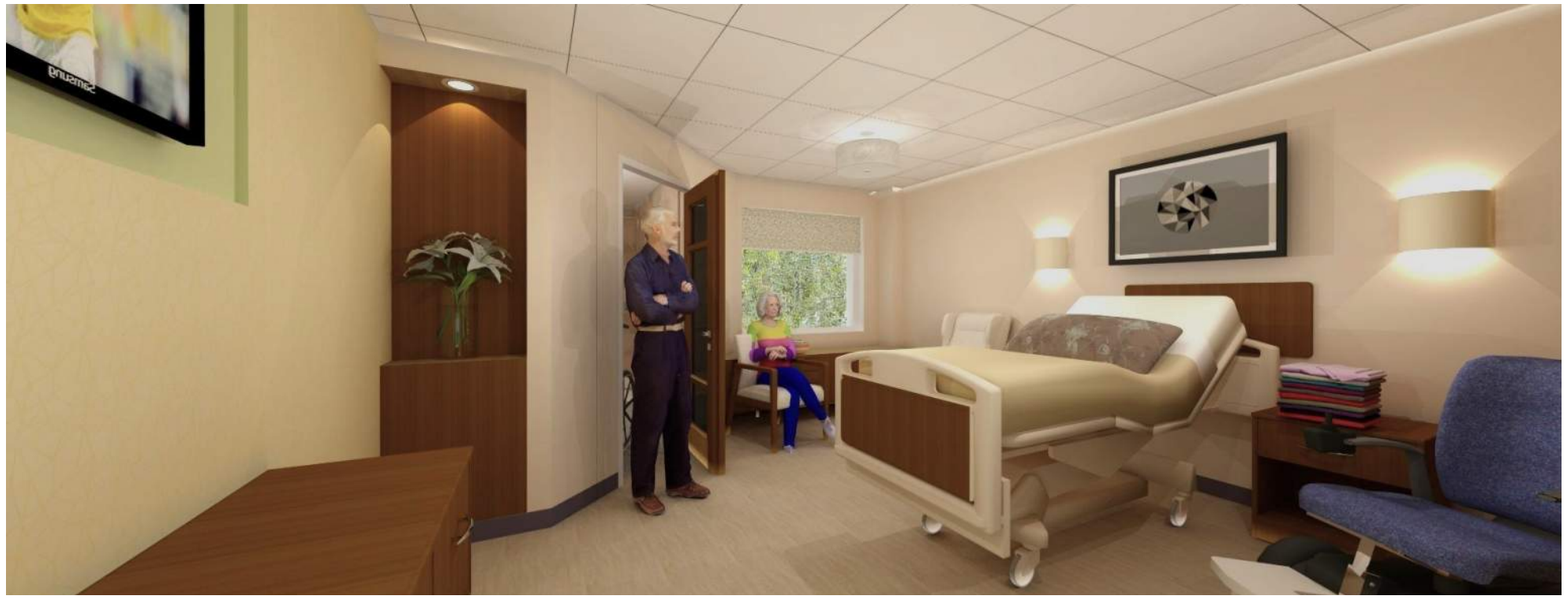

LOOKING INTO RESIDENT ROOM TOWARDS THE WINDOW—DEMENTIA UNIT TYP. RESIDENT ROOM— VIEW 1

LOOKING INTO RESIDENT ROOM TOWARDS THE WINDOW—DEMENTIA UNIT TYP. RESIDENT ROOM— VIEW 1
THIS VIEW SHOWS DIFFERENT ACCENT WALL AND WALL SCONCE

BANCROFT ARCHITECTS + ENGINEERS

Resident Room Renderings

LOOKING INTO RESIDENT ROOM TOWARDS DOOR INTO CORRIDOR—DEMENTIA UNIT TYP. RESIDENT ROOM— VIEW 2

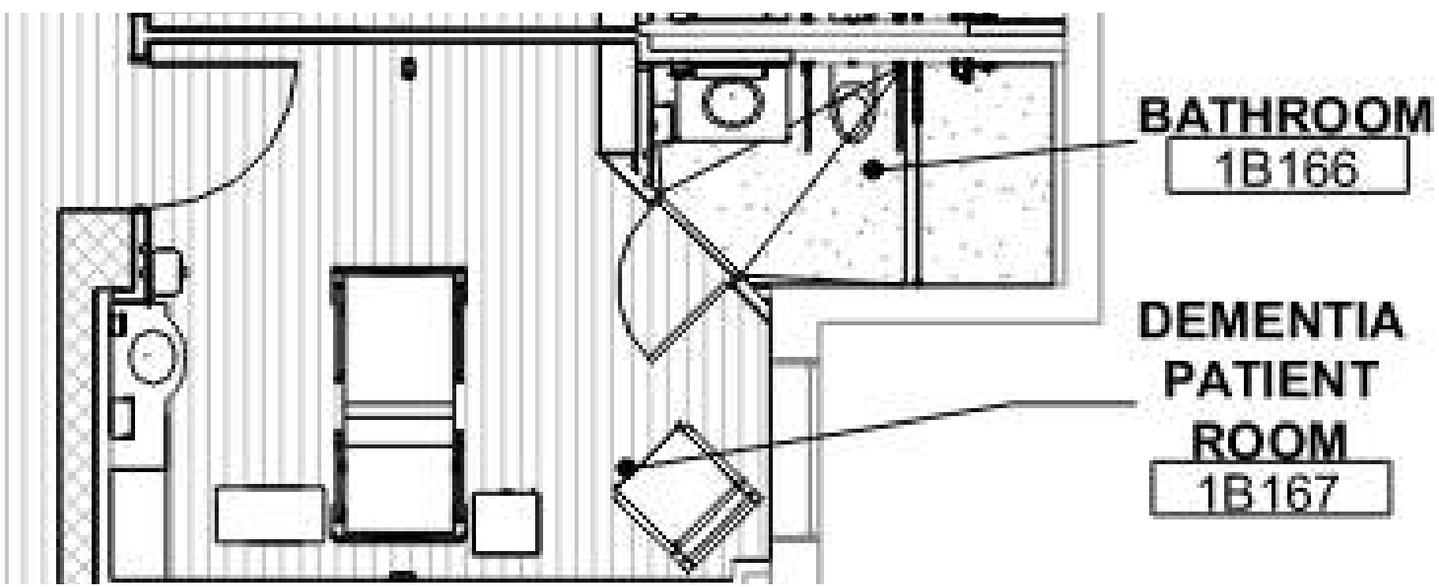

VIEW OF TYPICAL RESIDENT ROOM AND BATHROOM

Materials Board

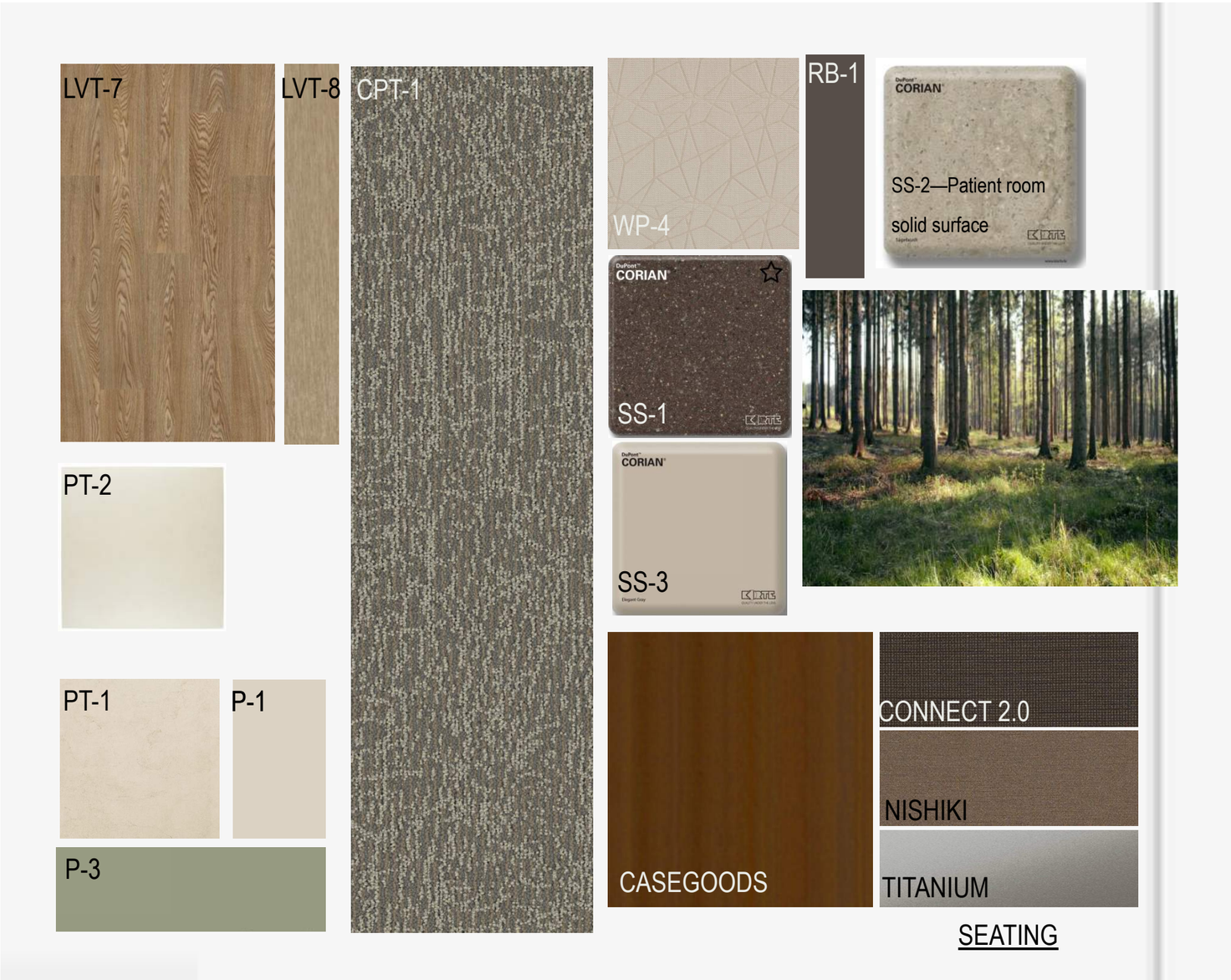

3-Form Panels for accents

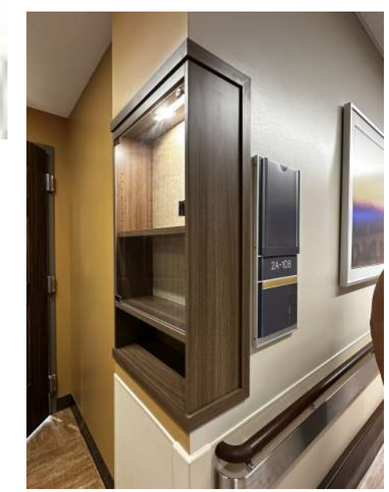

EXAMPLE OF PATIENT MEMORY BOX

BANCROFT ARCHITECTS + ENGINEERS

Dementia Unit

LOOKING INTO NURSES STATION IN CENTER OF GATHERING AREA—DEMENTIA UNIT— VIEW 1

LOOKING INTO NURSES STATION IN CENTER OF GATHERING AREA AND INTO MAIN CORRIDOR—DEMENTIA UNIT— VIEW 2

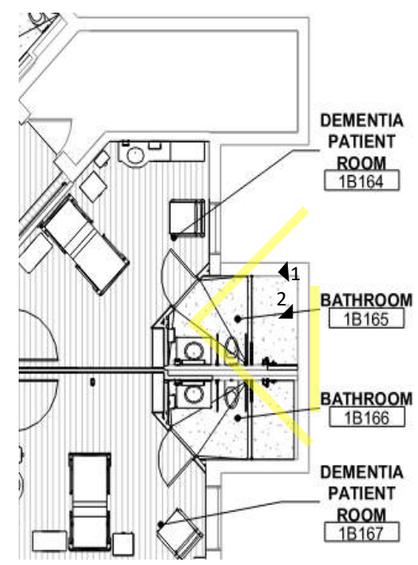

KEY PLAN - DEMENTIA UNIT

Dementia Unit & Resident Rooms Flooring Selections

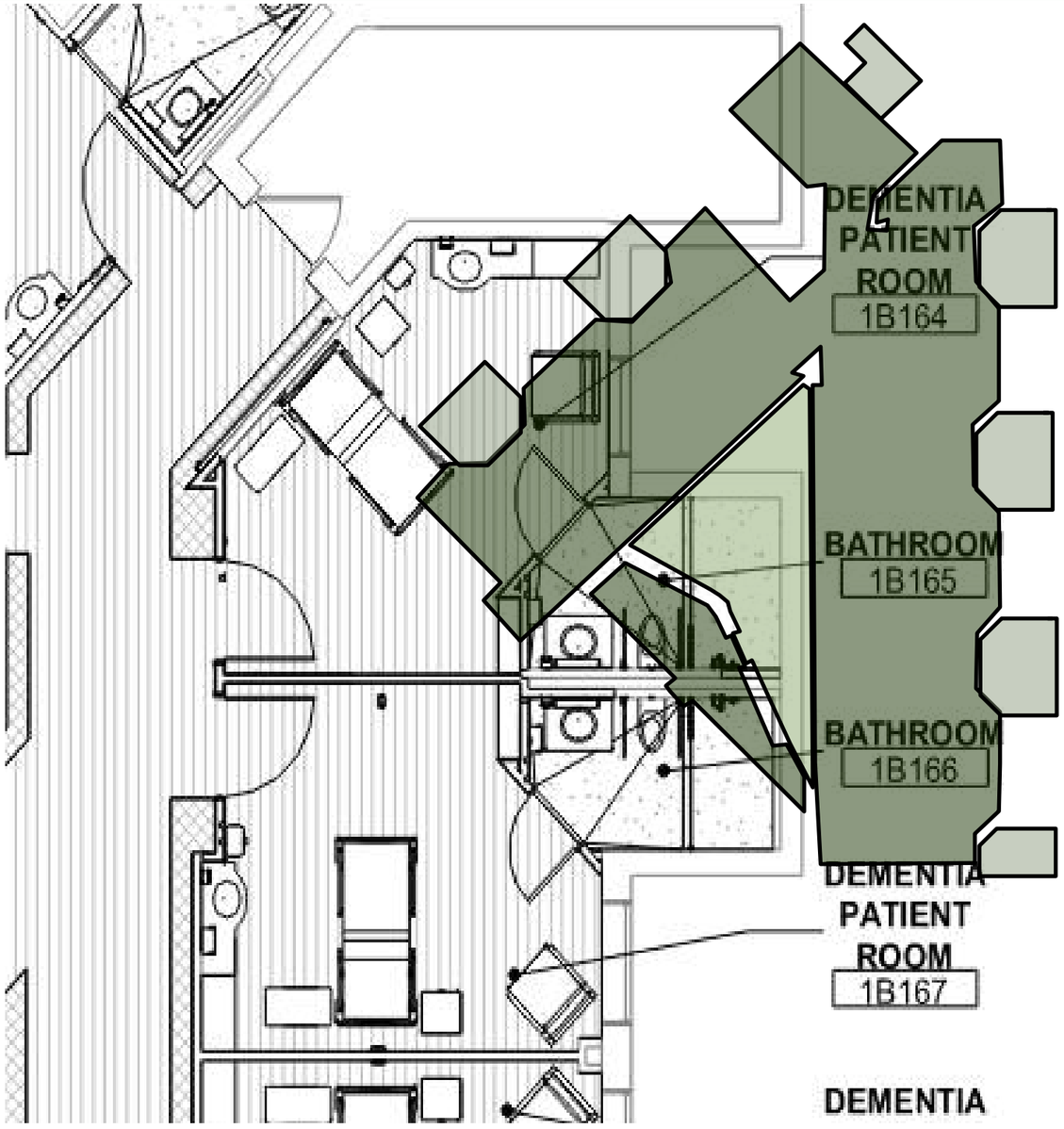

FLOORING:

LVT-7 ECO SURFACES—TOASTED OAK—9822

LVT-8 ECO SURFACES COSMOS TOASTED COCONUT—6625(ACCENT)

CPT-1 MOHAWK—Baccharis - GT408 HOPPI

PT-1 CROSSVILLE—PENTHOUSE — 12” X 24”

BANCROFT ARCHITECTS + ENGINEERS

Primary Care Clinic & Entrance Lobby—Materials Board

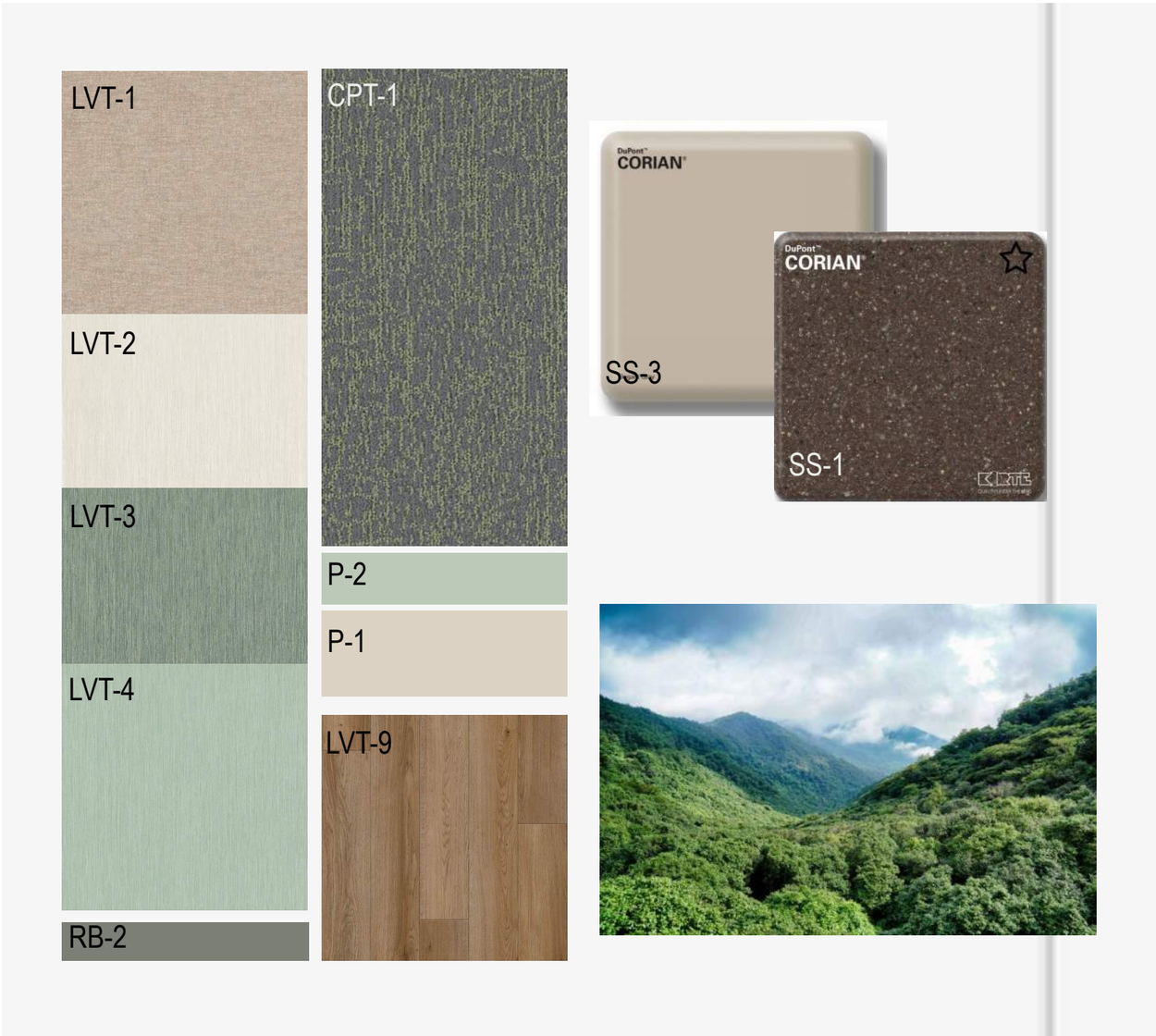

3-Form Panels for accents

BANCROFT ARCHITECTS + ENGINEERS

Primary Care Clinic & Entrance Lobby Renderings

LOOKING INTO ENTRANCE AND WAITING AREA—PRIMARY CARE ENTRANCE— VIEW 1

LOOKING FROM WAITING AREA TO FRONT DESK—PRIMARY CARE ENTRANCE— VIEW 2

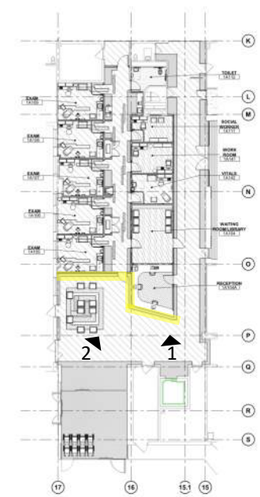

KEY PLAN - PRIMARY CARE CLINIC

Primary Care Clinic Rendering

LOOKING INTO PRIMARY CARE CORRIDOR—VIEW 1

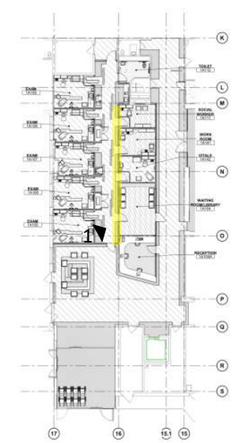

KEY PLAN - PRIMARY CARE CLINIC

BANCROFT ARCHITECTS + ENGINEERS

Primary Care Clinic & Entrance Lobby Flooring

N 1 ARCHITECTURAL - FINISH PLAN - PRIMARY CARE CLINIC & ENTRANCE LOBBY
1/8" = 1'-0"

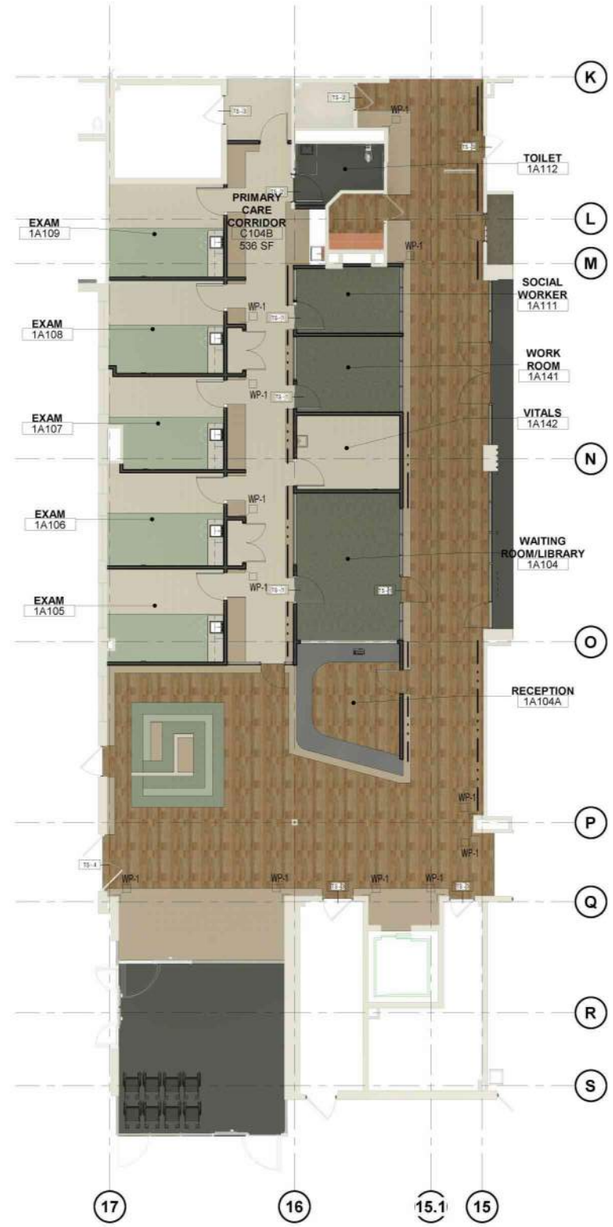

N 1 ARCHITECTURAL - FINISH PLAN - PRIMARY CARE CLINIC & ENTRANCE LOBBY
1/8" = 1'-0"

FLOORING:

LVT-1 MANNINGTON—PEANUT SHELL—C113 (ACCENT)

LVT-2 MANNINGTON—WINTER FLEECE—2017

LVT-3 MANNINGTON—GREEN TEA— C174 (ACCENT)

LVT-4 MANNINGTON—JADE— C173 (ACCENT)

LVT-9 AHF — PREDICTABLE BROWN

Easy Street/Atrium Renderings

LOOKING INTO EASY STREET TOWARDS DINING ROOM— VIEW 1

LOOKING INTO EASY STREET FROM DINING ROOM— VIEW 2

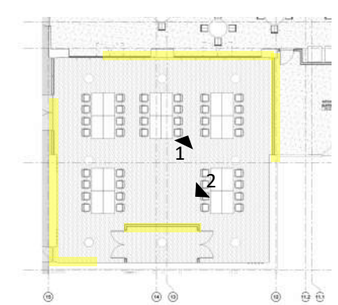

KEY PLAN— EASY STREET

BANCROFT ARCHITECTS + ENGINEERS

Lighting and Ceiling Options

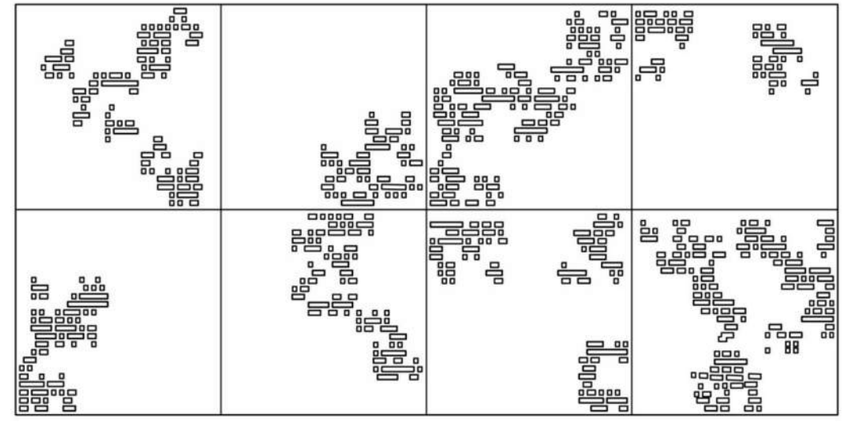

Typical Dining Room Flooring Selection

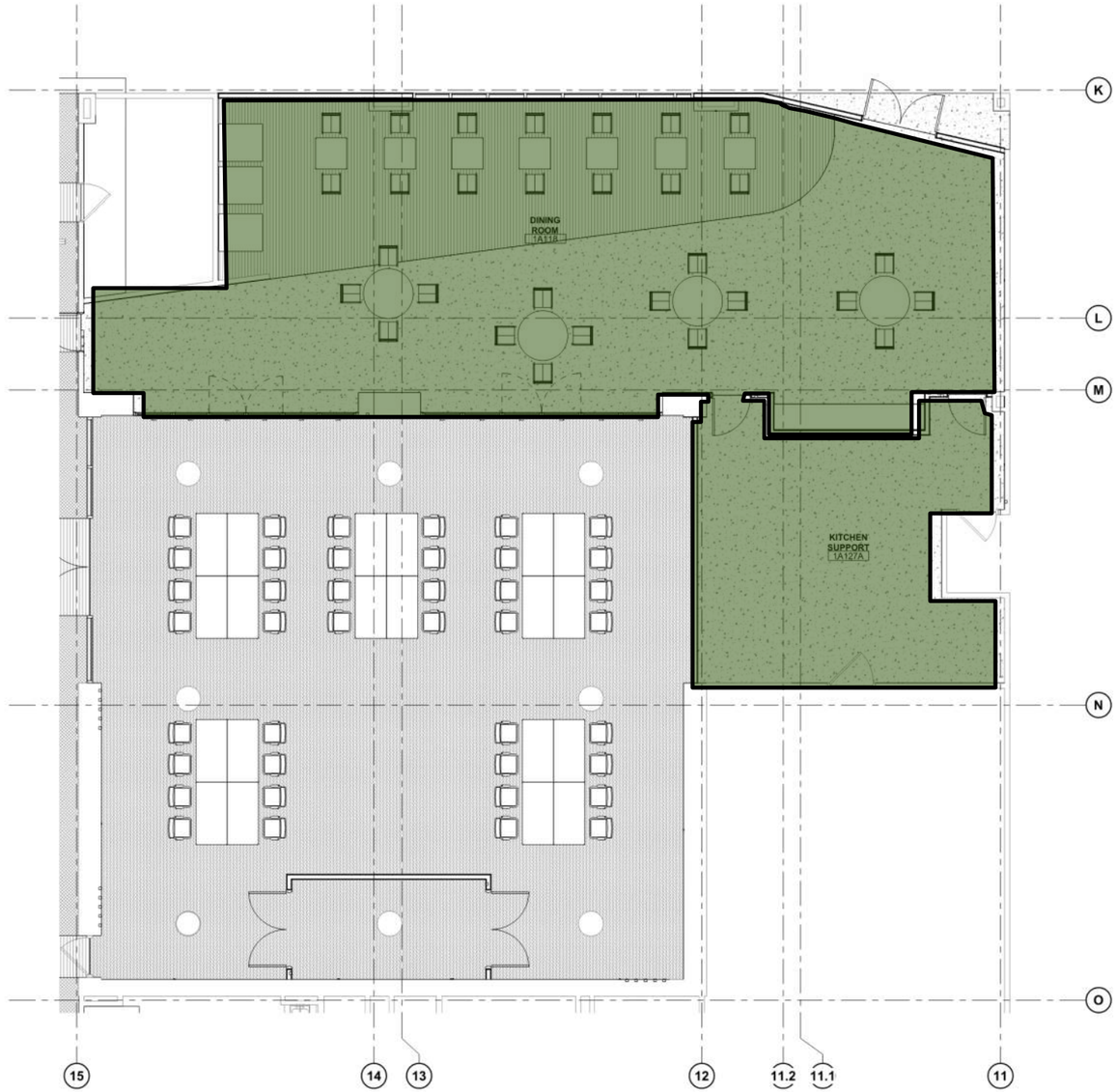

N 1 ARCHITECTURAL - FINISH PLAN - DINING 1A118
1/4" = 1'-0"

FLOORING:

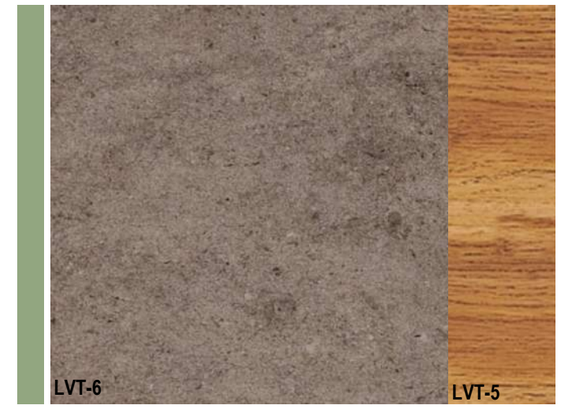

LVT-6 MANNINGTON—STRIA BASALT– AR0SMS43

LVT-5 MANNINGTON—CLASSIC OAK— AR0W7430 (ACCENT)

BANCROFT ARCHITECTS + ENGINEERS

Easy Street Flooring Options

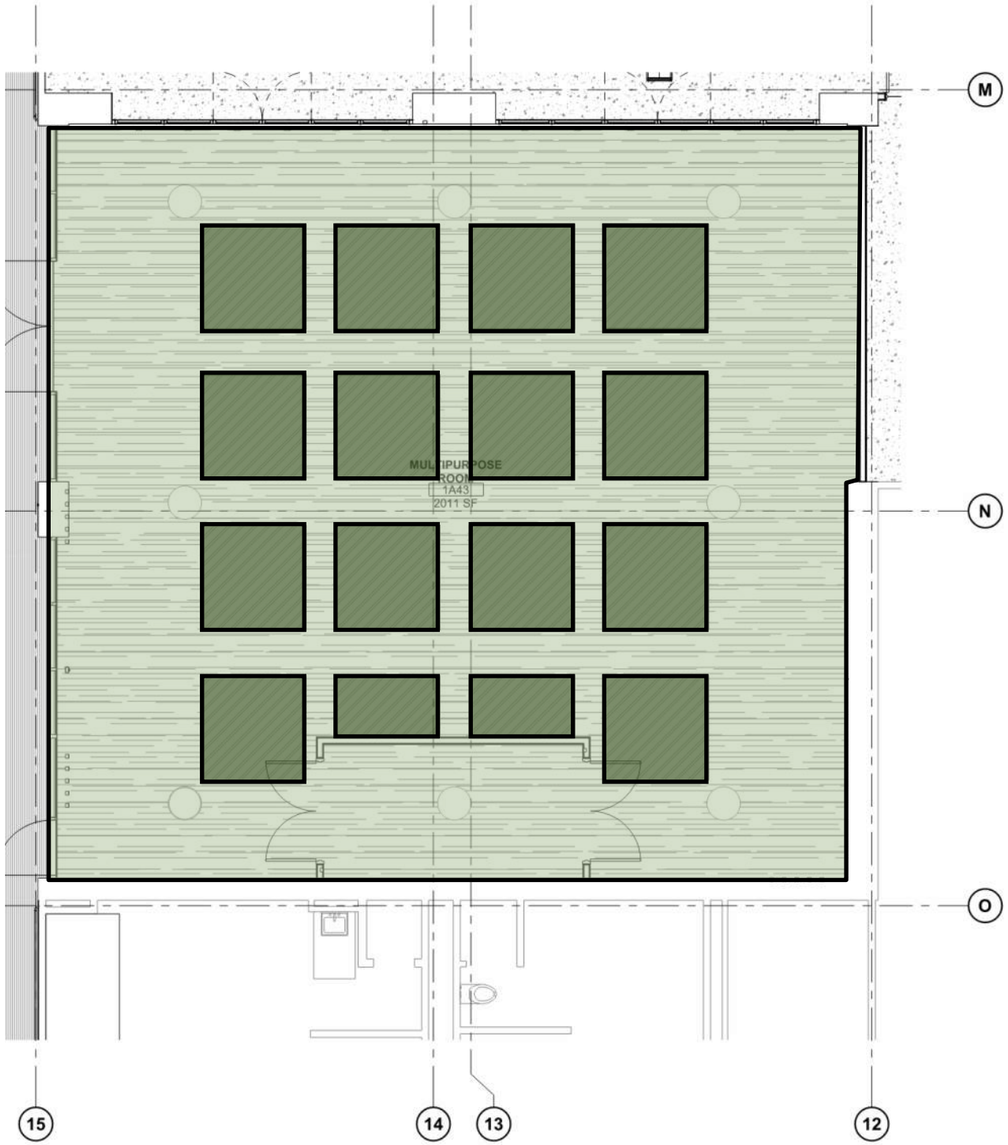

FLOORING:

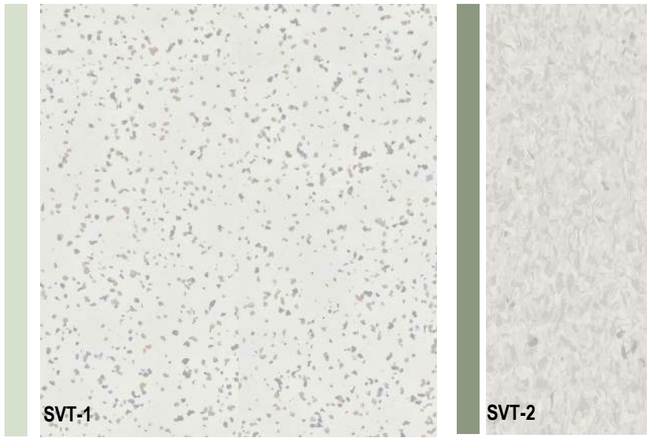

SVT-1 TARKETT—IQ EMINENT—DUSTY WHITE 0906

SVT-2 TARKETT—IQ GRANIT—LIGHT GREY 0160

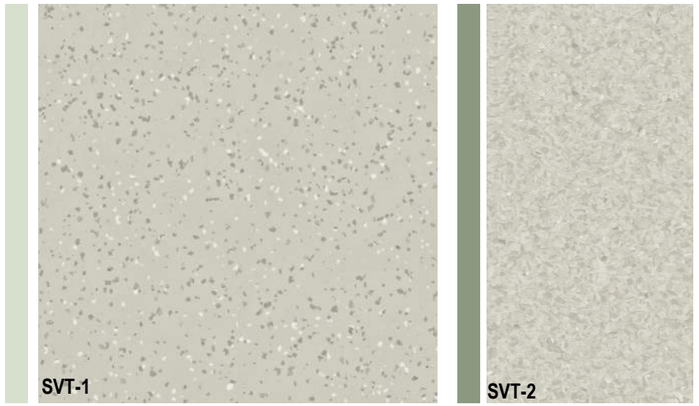

SVT-1 TARKETT—IQ EMINENT—DUSTY GREY 0908

SVT-2 TARKETT—IQ GRANIT—WARM GREY 0296

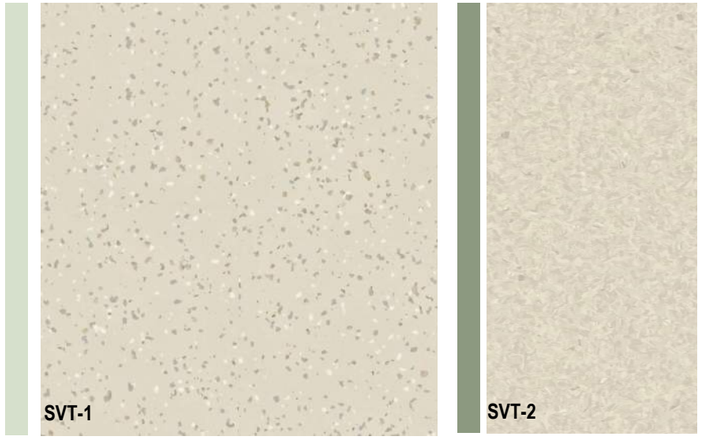

SVT-1 TARKETT—IQ EMINENT—DUSTY SAND 0928

SVT-2 TARKETT—IQ GRANIT—LIGHT SAND 0323

Typical Dining Room Materials Board

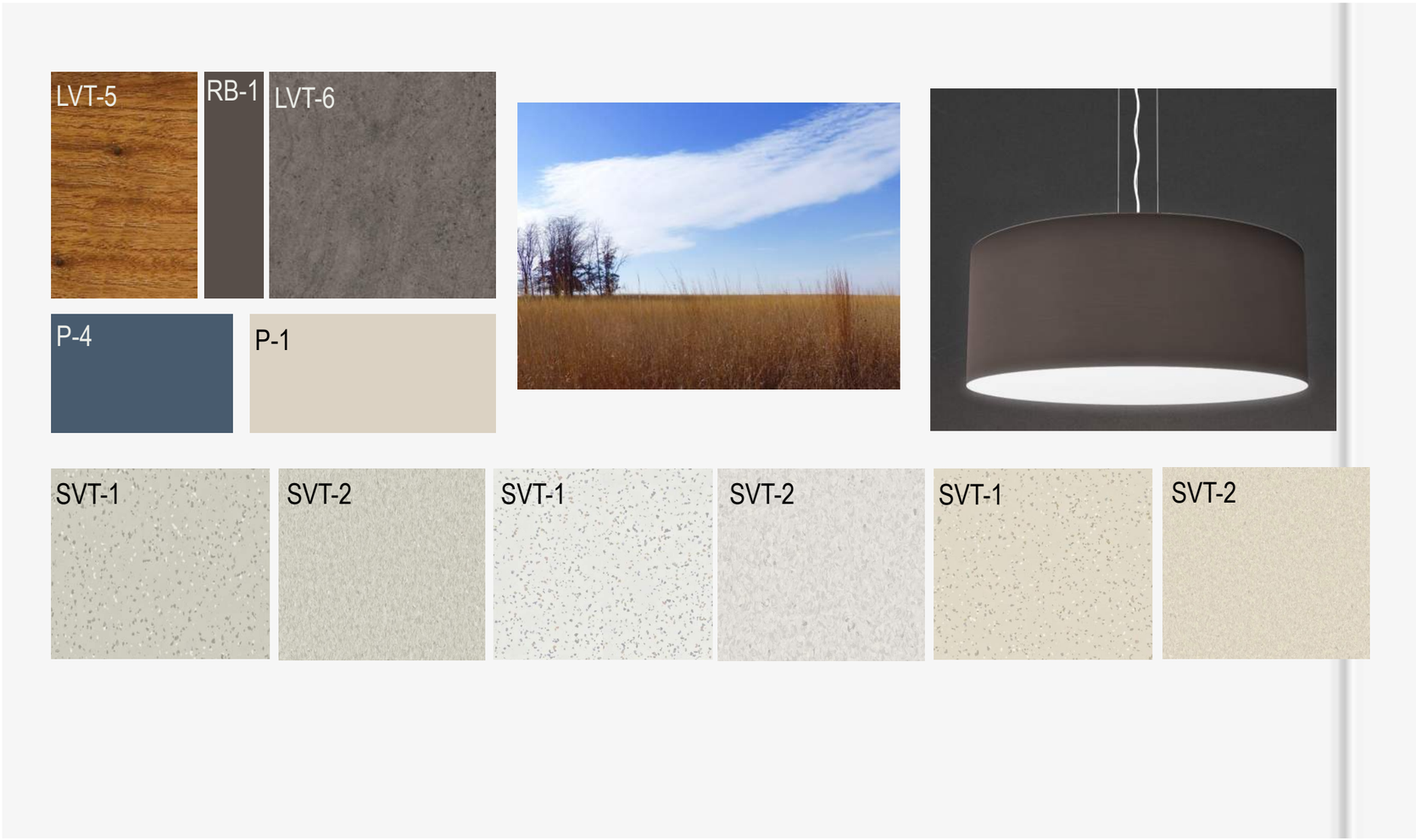

3-Form Panel for accents

BANCROFT ARCHITECTS + ENGINEERS

Dining Area Renderings

LOOKING INTO DINING AREA— VIEW 1

LOOKING INTO DINING AREA— VIEW 2

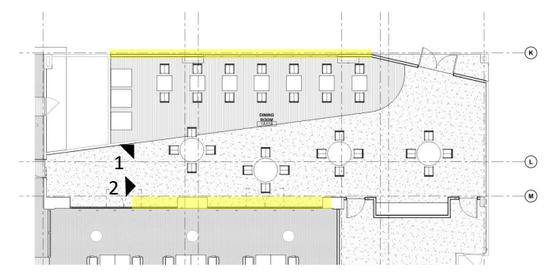

KEY PLAN - DINING AREA

C

Appendix

- Mechanical Products
- Mechanical Calculations

American Standard

AFWALL® MILLENIUM™ FloWise® 1.28 GPF FLUSHOMETER TOILET SYSTEM

with EVERCLEAN® MANUAL FLUSH VALVE

BARRIER FREE

AFWALL® MILLENIUM™ FloWise® 1.28 GPF FLUSHOMETER TOILET SYSTEM with EVERCLEAN®

☒ **2856.128** 1.28 gpf Exposed Top Spud Bowl and Manual Flush Valve

BOWL:
- Wall-mount elongated flushometer valve toilet
- Vitreous china
- High Efficiency. Operates in the range of 1.1 gpf to 1.6 gpf (4.2 Lpf to 6.0 Lpf)
- Permanent EverClean® surface inhibits the growth of stain- and odor-causing bacteria, mold, and mildew on the surface
- Condensation channel
- Direct-fed siphon jet action
- 1-1/2" inlet spud
- Fully-glazed 2-1/8" trapway
- 10" x 12" water surface area
- 100% factory flush tested
- Bolt caps and seat not included
- Model 3351.101

MANUAL FLUSH VALVE:
- Manual Piston-Type Water Closet Flush Valve for floor-mounted or wall-hung 1-1/2" top spud bowls
- Self-cleaning brass piston with integral wiper spring prevents clogging and reduces maintenance
- Piston operation delivers superior flush accuracy and repeatability
- Piston valve remains closed and does not need to be reset after loss of water pressure
- ADA compliant non-hold open handle provides automatic shut-off after every flush
- Positive seal ensures leak-free performance
- No external volume adjustment
- Durable chrome-plated cast brass construction is ideal for commercial applications
- Chloramine-resistant EPDM seals
- Adjustable tailpiece for rough-in flexibility
- Can be installed left or right handed
- Model 6047.121.002

Includes:
- 047007-0070A Inlet spud (furnished with bowl)
- 1" I.P.S. angle stop with back-flow prevention and vandal-resistant cap
- Sweat solder kit including cover tube and wall flange
- High back pressure vacuum breaker with down tube
- Spud coupling & flange for 1-1/2" top spud

To Be Specified:
- ❑ Color: ☒ White
- ❑ Seat: 5901.100 American Standard Seat
- ❑ 5901.110 American Standard Seat with EverClean®
- ❑ Alternate Seat: 5905.100 Heavy Duty American Standard Seat
- ☒ 5905.110 Heavy Duty American Standard Seat with EverClean
- ❑ Carrier Fitting (by others):

SEE REVERSE FOR ROUGHING-IN DIMENSIONS

High-Efficiency Toilet Systems:
- 20% water savings when compared to a 1.6 gpf toilet system

System MaP* Score:
- 1,000 grams of miso @ 1.28 gpf

* Maximum Performance (MaP) testing performed by IAPMO R&T Lab. MaP Report conducted by Veritec Consulting, Inc. and Koeller and Company.

Operating Pressure:
25 psi (flowing) - 80 psi (static)

Flow Requirement:
25gpm (94.6 L/min.)

Nominal Fixture Dimensions:
660 x 356 x 381mm (26" x 14" x 15")

EVERCLEAN® Surface

WATER EFFICIENT PRODUCT

© 2016 AS America Inc.

AFWALL® MILLENIUM™ FloWise® 1.28 GPF FLUSHOMETER TOILET SYSTEM

with EVERCLEAN® MANUAL FLUSH VALVE

BARRIER FREE

Fixture Compliance Certifications - Meets or Exceeds the Following Specifications:

- ASME A112.19.2-2008 / CSA B45.1-08 for Vitreous China Fixtures

Valve Listings:

- ASSE 1037
- ANSI/ASME A112.19.2
- ADA Compliant

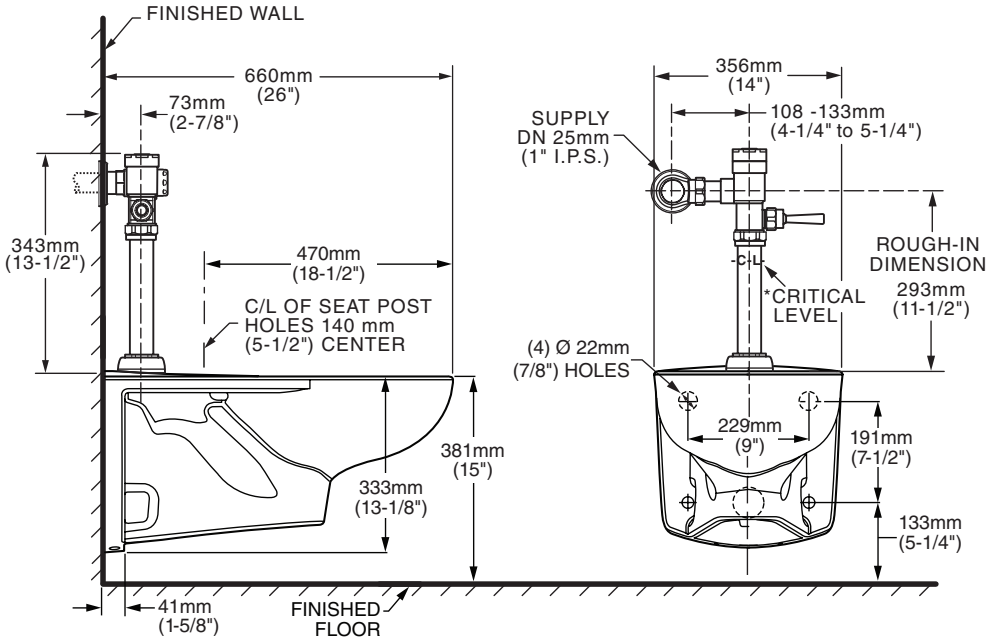

*Note: The Critical Line (-C-L-) on Vacuum Breaker must typically be a minimum of 6" (152mm) above fixture. Consult Codes for details.

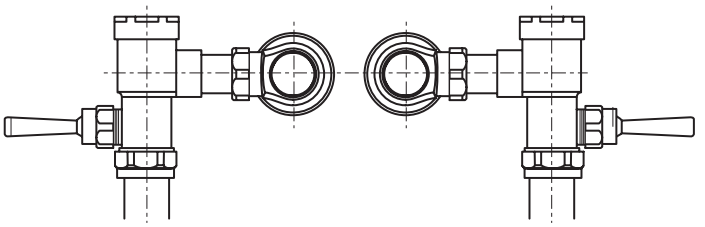

VALVE LEFT or RIGHT HAND INSTALLATION

MEETS THE AMERICANS WITH DISABILITIES ACT GUIDELINES AND ANSI A117.1 ACCESSIBLE AND USABLE BUILDINGS AND FACILITIES - CHECK LOCAL CODES.

- When installed so that top of seat is 432 to 483mm (17" to 19") from the finished floor.

NOTES:
WASTE OUTLET SEAL RING MUST BE NEOPRENE OR GRAPHITE-FELT (WAX RING NOT RECOMMENDED).
SUGGESTED 2mm (1/16) CLEARANCE BETWEEN FACE OF WALL AND BACK OF BOWL.
TO COMPLY WITH AREA CODE GOVERNING THE HEIGHT OF VACUUM BREAKER ON THE FLUSHOMETER VALVE, THE PLUMBER MUST VERIFY DIMENSIONS SHOWN FOR SUPPLY ROUGHING.
CARRIER FITTING AS REQUIRED TO BE FURNISHED BY OTHERS.
PROVIDE SUITABLE REINFORCEMENT FOR ALL WALL SUPPORT.

IMPORTANT: Dimensions of fixtures are nominal and may vary within the range of tolerances established by ANSI Standard A112.19.2.
These measurements are subject to change or cancellation. No responsibility is assumed for use of superseded or voided pages

© 2016 AS America Inc.

23-009 - Hines VA - CLC Bldg 217

WC-2 - Patient/Dementia toilet rooms with bedpan and Manual Flush valve with bedpan wash

American Standard

Afwall® Millennium™ FloWise® Elongated Flushometer Toilet

VITREOUS CHINA with EVERCLEAN®

BARRIER FREE

Afwall® Millennium™ FloWise® Elongated Flushometer Toilet with EverClean®

- Wall-mounted flushometer valve toilet
- Vitreous china
- High Efficiency, Low Consumption. Operates in the range of 1.1 gpf to 1.6 gpf (4.2 Lpf to 6.0 Lpf)
- Meets definition of HET (High Efficiency Toilet) when used with a high efficiency flush valve (1.1 gpf - 1.6 gpf or 1.28/1.1 gpf dual flush)
- Maximum Performance (MaP) score of 1,000 grams at 1.1 gpf - 1.6 gpf
- Permanent EverClean® antimicrobial surface inhibits the growth of stain- and odor-causing bacteria, mold, and mildew on the surface
- Condensation channel
- Concealed trapway design
- Elongated bowl
- Powerful direct-fed siphon jet action
- 1-1/2" inlet spud
- Fully-glazed 2-1/8" trapway
- 10" x 12" water surface area
- Tested to support static weight load of 1,000 lbs. (454 kg)

❑ **3351.101** Elongated bowl only, top spud
☒ **3352.101** Elongated bowl only, top spud with slotted rim for bedpan holding
❑ **3353.101** Elongated bowl only, back spud
❑ **3354.101** Elongated bowl only, back spud with slotted rim for bedpan holding

System MaP* Score:

- 1,000 grams of miso @ 1.1 gpf to 1.6 gpf when used with an American Standard flush valve

* Maximum Performance (MaP) testing performed by IAPMO R&T Lab. MaP report conducted by Gauley Associates Ltd. and Koeller and Company.

Component Parts:

❑ **047007-0070A** Inlet Spud (furnished with bowl)

Nominal Dimensions:

660 x 356 x 381mm
(26" x 14" x 15")

Recommended working pressure–between 25 psi at valve when flushing and 80 psi static

Fixture only, less seat, bolt caps, and flushometer valve

Compliance Certifications - Meets or Exceeds the Following Specifications:

- ASME A112.19.2/CSA B45.1 for Vitreous China Fixtures

* This product is not recommended for bariatric use.

ADA **MEETS THE AMERICANS WITH DISABILITIES ACT GUIDELINES AND ANSI A117.1 REQUIREMENTS FOR ACCESSIBLE AND USABLE BUILDING FACILITIES - CHECK LOCAL CODES.**

- When installed so top of seat is 432 to 483mm (17" to 19") from the finished floor.

SEE REVERSE FOR ROUGHING-IN DIMENSIONS

To Be Specified:

❑ Color: ☒ White
❑ Seat:
  ❑ American Standard #5901.100 Heavy duty open front less cover
  ☒ American Standard #5905.100 Extra heavy duty open front less cover
❑ Flushometer Valve:
  ❑ 1.6 gpf:
    ❑ Sensor-Operated: American Standard Selectronic®
      DC Power #6065.161.002 (Top Spud)
      AC Power #6067.161.002 (Top Spud)
    ❑ Manual: American Standard #6047.161.002 (Top Spud)
  ❑ 1.28 gpf:
    ❑ Sensor-Operated: American Standard Selectronic®
      DC Power #6065.121.002 (Top Spud)
      AC Power #6067.121.002 (Top Spud)
    ❑ Manual: American Standard #6047.121.002 (Top Spud)
  ❑ 1.6 / 1.1 gpf Dual Flush:
    ❑ Sensor-Operated: American Standard Selectronic®
      DC Power #6065.761.002 (Top Spud)
      AC Power #6067.761.002 (Top Spud)
  ❑ 1.28 / 1.1 gpf Dual Flush:
    ❑ Sensor-Operated: American Standard Selectronic®
      DC Power #6065.721.002 (Top Spud)
      AC Power #6067.721.002 (Top Spud)

ENVIROMENTAL PRODUCT DECLARATION | When used with **1.1 or 1.28 gpf** toilet flush valves | ADA COMPLIANT | EVERCLEAN | WATER EFFICIENT

© 2018 AS America Inc.

Afwall® Millennium™ FloWise® Elongated Flushometer Toilet

VITREOUS CHINA with EVERCLEAN®

BARRIER FREE

3351.101/3352.101

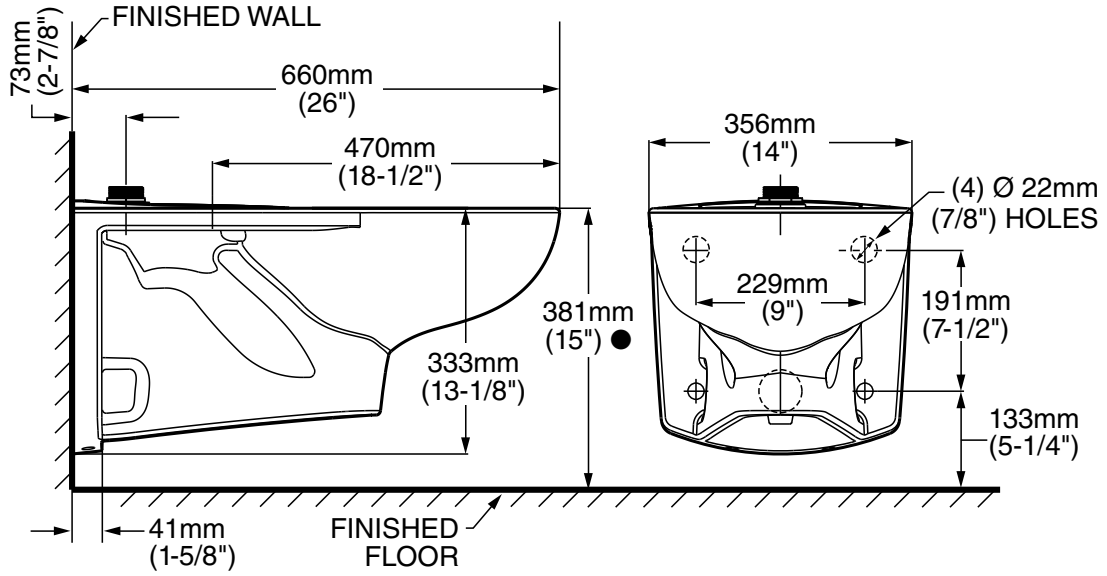

3353.101/3354.101

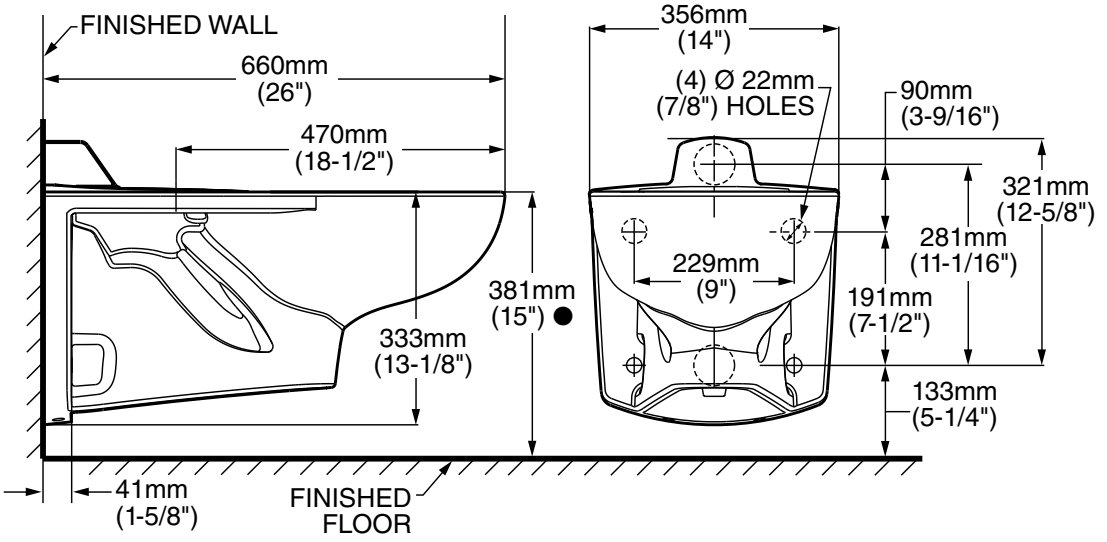

NOTES:

● Toilet designed to meet ADA accessibility standards when top of seat height set at 432 to 483mm (17" to 19") from finished floor.

PRODUCT 3351 AND 3353 SHOWN, 3352 AND 3354 SAME EXCEPT WITH SLOTTED RIM FOR BED PAN HOLDING.
WASTE OUTLET SEAL RING MUST BE NEOPRENE OR GRAPHITE-FELT (WAX RING NOT RECOMMENDED).
SUGGESTED 2mm (1/16) CLEARANCE BETWEEN FACE OF WALL AND BACK OF BOWL.
TO COMPLY WITH AREA CODE GOVERNING THE HEIGHT OF VACUUM BREAKER ON THE FLUSHOMETER VALVE, THE PLUMBER MUST VERIFY DIMENSIONS SHOWN FOR SUPPLY ROUGHING.
FLUSHOMETER VALVE NOT INCLUDED WITH FIXTURE AND MUST BE ORDERED SEPARATELY.
CARRIER FITTING AS REQUIRED TO BE FURNISHED BY OTHERS.
PROVIDE SUITABLE REINFORCEMENT FOR ALL WALL SUPPORT.

IMPORTANT: Dimensions of fixtures are nominal and may vary within the range of tolerances established by ANSI Standard A112.19.2. These measurements are subject to change or cancellation. No responsibility is assumed for use of superseded or voided pages

© 2018 AS America Inc.

PART OF LIXIL

ROYAL® MANUAL SPECIALTY FLUSHOMETER

ROYAL BPW 1000

OPTIONS

Flush Volume

- [ ] 1.6 gpf (6.0 Lpf) (1.6)
- [ ] 3.5 gpf (13.2 Lpf) (3.5)
- [ ] 6.5 gpf (24.6 Lpf) (6.5)
- [x] 1.28 gpf (4.8 Lpf) (1.28)

Finish

- [x] Polished Chrome (CP)

Activation

- [x] Manual Specialty

Valve

- [x] Diaphragm

Water Efficiency

- [ ] Low Consumption
- [x] Water Saver
- [ ] High Efficiency

Fixture Type

- [ ] Water Closet

Fixture Connection

- [x] Top Spud

Installation

- [x] Exposed

Handle

- [ ] Sanigard® (SG)
- [ ] Front of Valve (H)

Control Stop

- [ ] Adjustable Ground Joint (ADJ/GJ)
- [ ] Less (L/STOP)

Vacuum Breaker

- [ ] Offset (O)

Offset

- [ ] 2" (51mm) (2-OFST)
- [ ] 1" (25mm) (1-OFST)
- [ ] 1 ½" (38mm) (1-1/2-OFST)

Outlet Tube

- [ ] F190 (F190)
- [ ] Trap Primer (TP)

Fitting

- [ ] F31AA (F31AA)

Image for a standard ROYAL BPW 1000 shown

DESCRIPTION

Royal® Exposed Manual Specialty Water Closet Bedpan Washer Flushometer

FEATURES

- Exposed water closet, diaphragm model Flushometer is intended for floor-mounted or wall-hung top spud bowls
- Operates by means of a metal oscillating, non-hold-open handle with a triple seal handle packing to ensure water conservation
- Presents a leaner, more aesthetic installation, reducing possible bacteria growth on hidden and hard-to-reach surfaces found on other bedpan washer units
- Eliminates the need for unsanitary hose sprays, as well as the additional housekeeping that hoses require and the potential for patient slippage
- Valve body, stop body, diverter body and diverter pivot made from brass casting using semi-red brass for durability and long life
- PERMEX synthetic rubber diaphragm with Dual Filtered Fixed Bypass
- Valve body, Cover, Tailpiece and Control Stop shall be in compliance with ASTM Alloy Classification for Semi-Red Brass
- Valve shall be in compliance to the applicable sections of ASSE 1037.

DOWNLOADS

- Slimline Royal/Regal XL Exposed Installation Instructions
- Slimline Bedpan Washer Repair and Maintenance Guide
- Additional Downloads

Sloan 10500 Seymour Ave, Franklin Park, IL 60131
Phone: 800.982.5839 • Fax: 800.447.8329 • sloan.com

Downloaded 01/19/22 • • View Latest Version

Specialty

- [x] Bedpan Washer

Compliances & Certifications

- [ ] BAA Compliant
- [ ] UPC Certified
- [ ] cUPC Certified
- [ ] BREEAM Water Credit
- [ ] Green Globes Water Credit

NOTES

For product line drawings, view model-specific spec sheets.

All information contained within this document subject to change without notice.

Sloan 10500 Seymour Ave, Franklin Park, IL 60131
Phone: 800.982.5839 • Fax: 800.447.8329 • sloan.com

Downloaded 01/19/22 • • View Latest Version

Whitehall Manufacturing®
Manufacturer of Healthcare and Rehabilitation Products since 1946

Bariatric Toilet

Division of Acorn Engineering Company®

A MEMBER OF MORRIS GROUP INTERNATIONAL

Bariatric On-Floor Toilet ADA Compliant

Model WH2125-A

WH2125-A-W-2-EG-HSBJ

Fixture May Show Some Available Options

Bariatric On-Floor Toilet ADA Compliant

Fixture is arranged to be installed on a finished wall optionally from the front or rear. Unit is fabricated of 14 gage, type 304 stainless steel and is seamless welded construction. Fixture (less -HSBJ Hinged Seat option) shall withstand loads up to 2,000 lbs. with no measurable deflection and loads up to 5,000 lbs. with no permanent damage. Optional -HSBJ Big John® Hinged Toilet Seat is rated at 1,200 lbs. Fixture exterior and Bowl interior has a satin finish. Optional -EG Enviro-Glaze color finishes are available. Housing includes side Access Panels to facilitate installation of fixture and Hinged Seat by others. Toilet complies with ADA requirements for accessibility. Compliance is subject to the interpretation and requirements of the local code authority.

Toilet is optionally available in both Floor Outlet or Wall Outlet with elongated Bowl and an overall depth of 29". Fixtures are manufactured to comply with ASME A112.19.3 and CSA B45.4 standards. Toilet requires a minimum of 25 PSI flow pressure and uses a minimum water consumption of 1.28 GPF. Trap will pass a 2-1/8" ball and is fully enclosed with a minimum 3-1/2" seal.

Wall Outlet configurations with Front Mounting (-FM) include a wall waste outlet with a 7-1/2" Dia. Recessed Gasket Flange. Rear Mount (-RM) fixtures include a 2-3/8" Dia. plain end Toilet Waste that extends 3" beyond back of fixture.

Floor Outlet configurations include a floor waste outlet with a 7-1/2" Dia. Recessed Gasket Flange for both Front (-FM) and Rear (-RM) mount installations.

Flush Valve supply is additionally available for exposed or concealed Flush Valve styles in 1.28 GPF, 1.6 GPF, or 3.5 GPF and with 1-1/2" NPT connection.

GUIDE SPECIFICATION

Provide and install Whitehall Bariatric ADA Compliant Toilet (specify model number and options). Unit shall conform to ADA requirements. Fixture shall be fabricated from 14 gage, type 304 stainless steel. Construction shall be seamless welded and exposed surfaces shall have a satin finish. Toilet shall have an elongated Bowl with a self-draining Flushing Rim and punching for Seat by others. Toilet shall be ASME A112.19.3 and CSA B45.4 compliant. Toilet requires a minimum of 25 PSI flow pressure and uses a minimum water consumption of 1.28 GPF. Fully enclosed Toilet Trap shall have a minimum 3-1/2" seal that shall pass a 2-1/8" diameter ball.

*Please visit **www.whitehallmfg.com** for most current specifications.*

Recyclable Product

Water Conserving Product

Complies with the following standards:

Whitehall Mfg. • P.O. Box 3527 • City of Industry, CA 91744 • (800) 782-7706 • (626) 968-6681

23-009 - Hines VA - CLC Bldg 217

WC-3 - BARIATRIC TOILET REAR OUTLET

Whitehall Manufacturing®
Manufacturer of Healthcare and Rehabilitation Products since 1946

Bariatric Toilet

WALL THICKNESS AND TYPE (Must Specify)

Thickness _____ Type _____

MODEL NUMBER AND OPTIONS SELECTION

BASE MODEL NUMBER

☑ WH2125-A Bariatric Toilet ADA Compliant

SUPPLY (Must Specify)

☒ -T Top (Exposed)
☐ -W Wall (Concealed)

FIXTURE MOUNTING AND WASTE (Must Specify)

☒ -2 On-Floor, Wall Outlet
☐ -3 On-Floor, Floor Outlet

INSTALLATION (Must Specify)

☒ -FM Front Mount
☐ -RM Rear Mount (Note: Requires Accessible Rear Plumbing Chase)

FLUSH VALVE GPF's (Must Specify)

☐ -1.28 GPF (HET)
☒ -1.6 GPF
☐ -3.5 GPF

FLUSHING INLET LOCATION (Must Specify for Wall Supply)

☒ -LFV Flush Valve Left
☐ -RFV Flush Valve Right (Shown)

FLUSH VALVE OPTIONS (Must Specify)
SEE WHITEHALL LIGATURE RESISTANT SUPPLEMENTARY MATERIAL FOR FLUSH VALVE COVERS AND BOXES

☐ -FV Flush Valve, Mechanical (N/A for ADA)
☐ -FVBO Flush Valve by Others
☐ -FVH Flush Valve, Hydraulic (Wall Supply)
☐ -FVL Flush Valve, ADA Lever Handle (Wall Supply)
☐ -MVCFV Time-Trol Flush Valve (N/A for Top Supply)

TOILET SEAT OPTIONS

☐ -HSBJ Big John® Hinged Seat 1,200 lbs Rated
☐ -OFLC Open Front Less Cover (Shown Below)
☐ -OWFC Open Front With Cover
☐ -LPFS Less Punch for Hinged Seat 17" Flood Rim AFF

TOILET OPTIONS

☐ -BL Bedpan Lugs
☐ -FT Flood-Trol (N/A w/ Top Supply)**
☐ -FTA Flood-Trol Auto-Reset (N/A w/ Top Supply)**
☐ -FTE Flood-Trol Electronic**

(*NOTE: **Not available with Top Supply or -FM Front Mount*)

☐ -FVT Flush Thru Wall Connector
☐ -PE Plain End Toilet Waste (Standard on Rear Mount Units)
☐ -TF Transformer, 120VAC to 24VAC (For -MVCFV)
☐ -TSC Toilet Shipping Cover
☐ -WO3B 2-3/8" P-Trap w/ 3" Plain End Waste Outlet (Rear Mount Only)

PRODUCT OPTIONS

☒ -EGE Enviro-Glaze Color Specify: White
Toilet Exterior Only
☐ -SW Wall Sleeve (-RM Only)
☐ -VAC AcornVac System

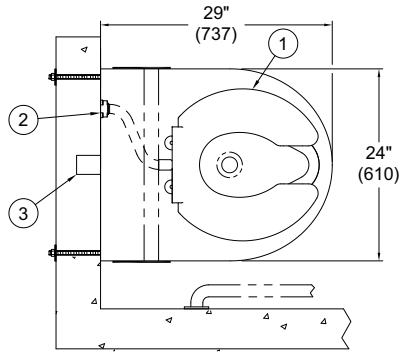

NOTES:
1. OPTIONAL -HSBJ BIG JOHN HINGED SEAT
2. -RFV OFFSET FLUSHING INLET SHOWN FOR -W CONCEALED SUPPLY. -LFV IS OPPOSITE
3. Ø2-3/8" PLAIN END WASTE OUTLET
4. LEFT AND RIGHT ACCESS PANELS
5. OPTIONAL -T TOP SUPPLY SHOWN
6. PUNCHING FOR HINGED SEAT
7. Ø7-1/2" GASKET FLANGE WASTE OUTLET

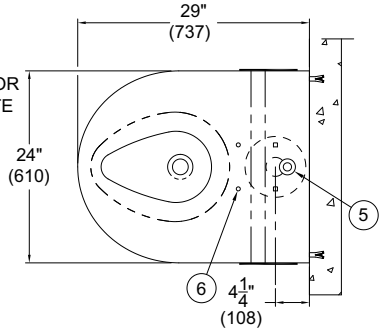

*FIXTURE INTENDED TO MEET ADA SEAT HEIGHT REQUIREMENTS WHEN OPTIONAL -LPFS IS SELECTED, FLOOD RIM BECOMES 17" AFF. ADA REQUIRES A MINIMUM OF 17" TO 19" MAXIMUM MEASURED FROM THE TOP OF THE SEAT TO THE FLOOR.

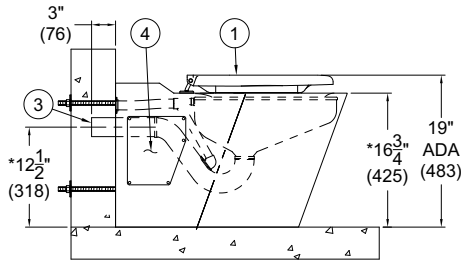

WH2125A-W-2-RM-RFV-HSBJ BLOWOUT JET

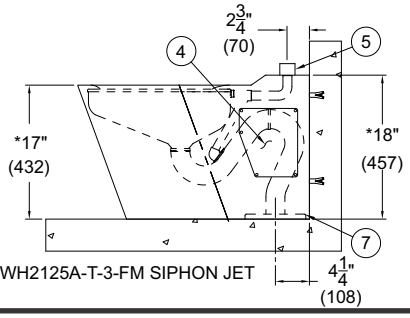

WH2125A-T-3-FM SIPHON JET

⚠ WARNING: Cancer and Reproductive Harm - www.P65Warnings.ca.gov

All dimensions are nominal and subject to manufacturer's change without notice. Whitehall assumes no responsibility fo use of void or superseded data © Whitehall Manufacturing, Member of Morris Group International. Please visit ***www.whitehallmfg.com*** for most current specifications.

SELECTION SUMMARY & APPROVAL FOR MANUFACTURING

Model Number & Options_____Quantity_____
Company_____Date_____
Contact_____Title_____
Approval for Manufacturing/Signature_____

Whitehall Mfg. • P.O. Box 3527 • City of Industry, CA 91744 • (800) 782-7706 • (626) 968-6681

REVISED: 12/14/23

23-009 - Hines VA - CLC Bldg 217

LAV-1 - Public Toilet Rooms wall mounted manual gooseneck faucet

American Standard

Style That Works Better

BARRIER FREE

LUCERNE™ WALL-HUNG LAVATORY

VITREOUS CHINA

LUCERNE™ WALL-HUNG LAVATORY

- Wall-hung sink
- Vitreous china
- Front overflow
- D-shaped bowl
- Self-draining deck area with contoured back and side splash shields
- Faucet ledge

Faucet holes on 203mm (8") centers (Illus.):

❑ **0356.028** For exposed bracket support
Shown with 4801.862 Amarilis Heritage faucet with Triune Cross handles (not included)

❑ **0356.015** For wall hanger (included) or concealed arms support

❑ **0356.037** For wall hanger (included) or concealed arms support
- Extra right-hand hole

❑ **0356.073** For wall hanger (included) or concealed arms support
- Extra left-hand hole

Faucet holes on 102mm (4") centers:

❑ **0355.027** For exposed bracket support

☒ **0355.012** For wall hanger (included) or concealed arms support

❑ **0355.034** For wall hanger (included) or concealed arms support
- Extra right-hand hole

❑ **0355.056** For wall hanger (included) or concealed arms support
- Extra left-hand hole

Single center faucet hole (Illus.):

❑ **0356.041** For exposed bracket support
Shown with 1340.000 metering faucet (not included)

❑ **0356.421** For wall hanger (included) or concealed arms support

❑ **0356.137** For wall hanger (included) or concealed arms support
- Extra right-hand hole

❑ **0356.115** For wall hanger (included) or concealed arms support
- Extra left-hand hole

Nominal Dimensions:
521 x 464mm
(20-1/2" x 18-1/4")

Bowl sizes:
381mm (15") wide
254mm (10") front to back
165mm (6-1/2") deep

Compliance Certifications -
Meets or Exceeds the Following Specifications:
- ASME A112.19.2 for Vitreous China Fixtures

0356.028

0356.041

SEE REVERSE FOR ROUGHING-IN DIMENSIONS

To Be Specified:
❑ Color: ☒ White ❑ Bone ❑ Silver ❑ Black ❑ Linen
❑ Faucet*:
❑ Faucet Finish:
❑ Supplies:
❑ 1-1/4" Trap:
❑ Nipple:
❑ Bracket Support (by others):
❑ Concealed Arms Support (by others):

* See faucet section for additional models available

MEETS THE AMERICANS WITH DISABILITIES ACT GUIDELINES AND ANSI A117.1 ACCESSIBLE AND USABLE BUILDINGS AND FACILITIES - CHECK LOCAL CODES.
Top of front rim mounted 864mm (34") from finished floor.

© 2008 AS America Inc.

American Standard

Style That Works Better

BARRIER FREE

LUCERNE™ WALL-HUNG LAVATORY

VITREOUS CHINA

0356.015 8" CTRS FOR WALL HANGER OR CONCEALED ARMS

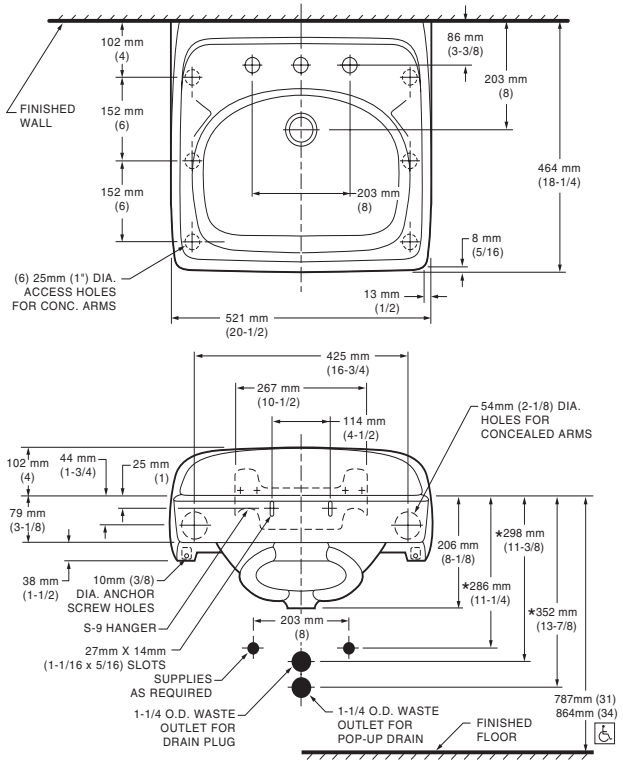

0356.037 8" CTRS FOR WALL HANGER OR CONCEALED ARMS EXTRA RIGHT HAND HOLE

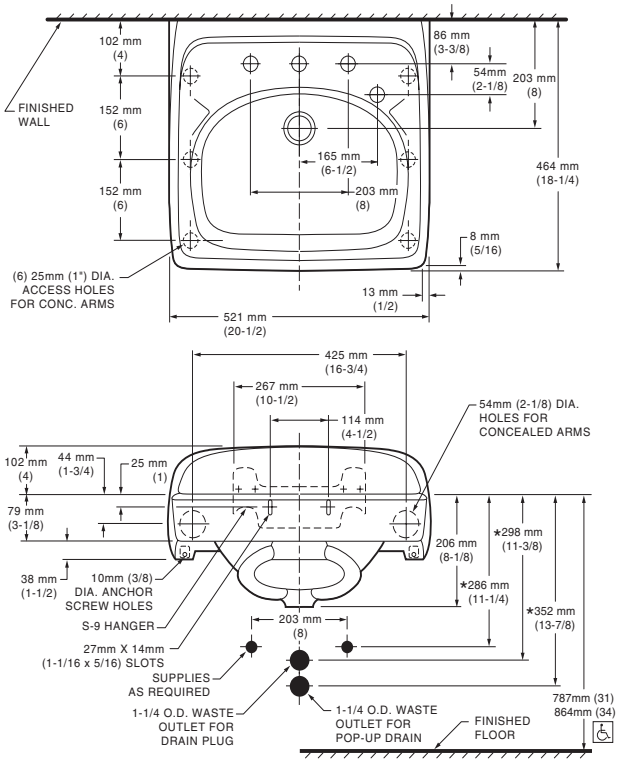

0356.073 8" CTRS FOR WALL HANGER OR CONCEALED ARMS EXTRA LEFT HAND HOLE

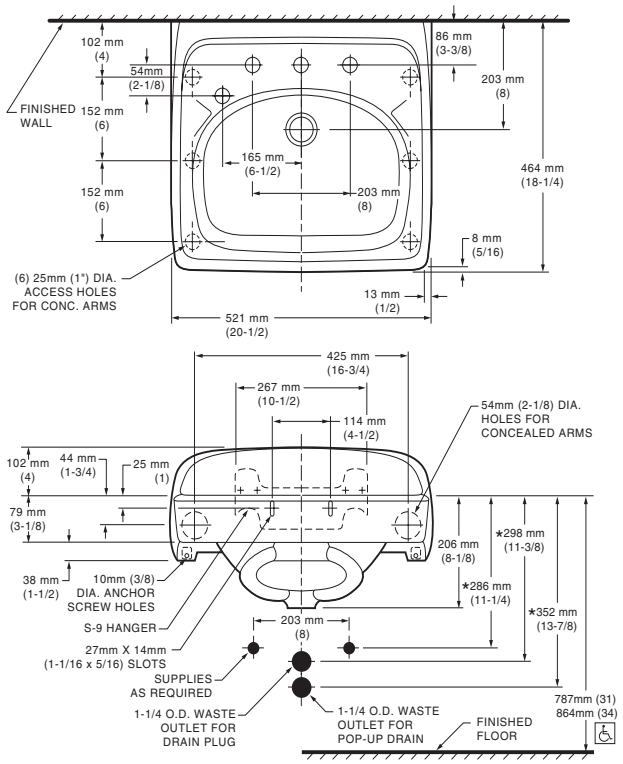

NOTES:
* DIMENSIONS SHOWN FOR LOCATION OF SUPPLIES AND "P" TRAP ARE SUGGESTED.
PROVIDE SUITABLE REINFORCEMENT FOR ALL WALL SUPPORTS.
FITTINGS NOT INCLUDED AND MUST BE ORDERED SEPARATELY.
CONCEALED ARM SUPPORT AS REQUIRED TO BE FURNISHED BY OTHERS.

IMPORTANT: Dimensions of fixtures are nominal and may vary within the range of tolerances established by ANSI Standard A112.19.2. These measurements are subject to change or cancellation. No responsibility is assumed for use of superseded or voided pages.

LAVATORY DESIGNED TO MEET ADA HANDICAPPED GUIDELINES WITH MOUNTING HEIGHT SET AT 864MM (34") ABOVE FINISHED FLOOR.

© 2008 AS America Inc.

American Standard
Style That Works Better

LUCERNE™ WALL-HUNG LAVATORY
VITREOUS CHINA

BARRIER FREE

0355.012 4" CTRS FOR WALL HANGER OR CONCEALED ARMS

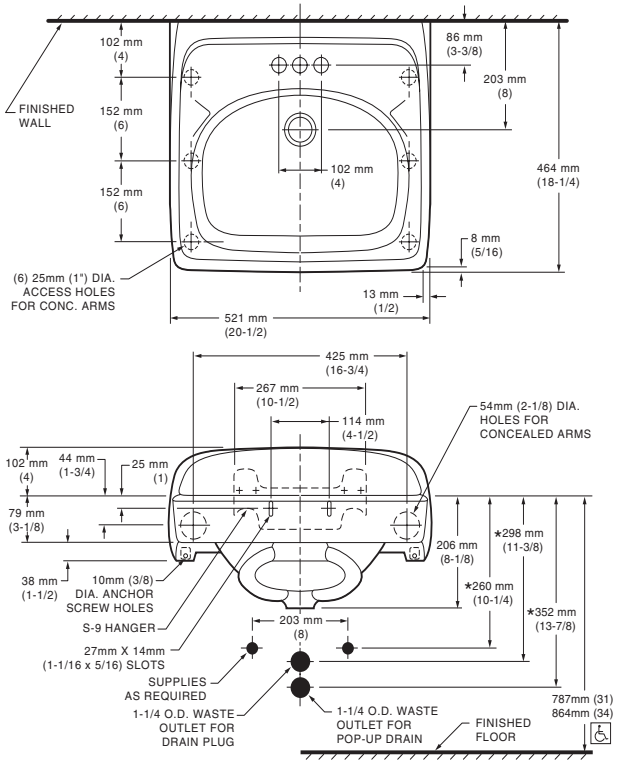

0355.034 4" CTRS FOR WALL HANGER OR CONCEALED ARMS EXTRA RIGHT HAND HOLE

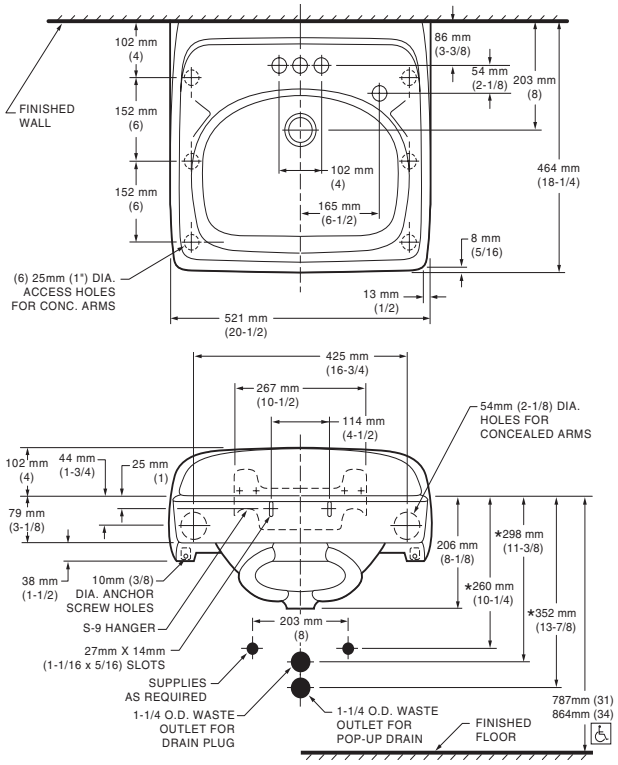

0355.056 4" CTRS FOR WALL HANGER OR CONCEALED ARMS EXTRA LEFT HAND HOLE

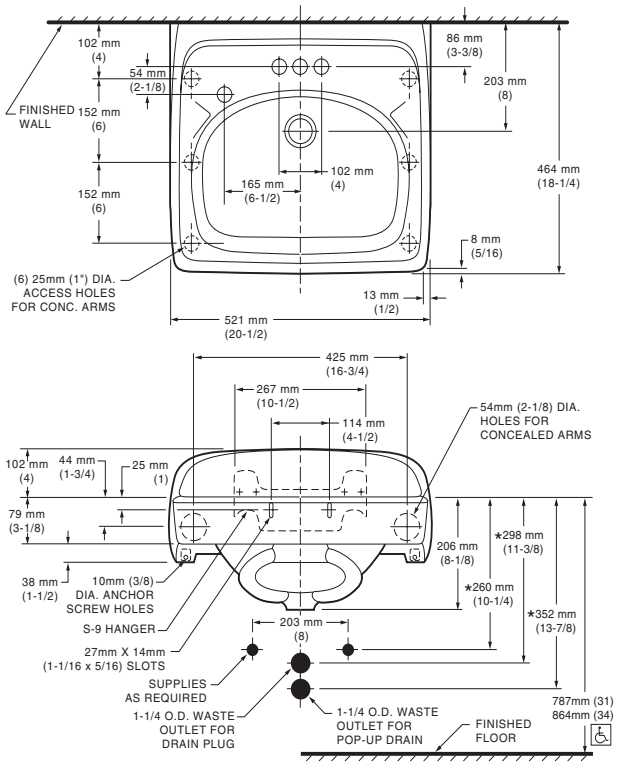

NOTES:
* DIMENSIONS SHOWN FOR LOCATION OF SUPPLIES AND "P" TRAP ARE SUGGESTED.
PROVIDE SUITABLE REINFORCEMENT FOR ALL WALL SUPPORTS. FITTINGS NOT INCLUDED AND MUST BE ORDERED SEPARATELY. CONCEALED ARM SUPPORT AS REQUIRED TO BE FURNISHED BY OTHERS.

IMPORTANT: Dimensions of fixtures are nominal and may vary within the range of tolerances established by ANSI Standard A112.19.2. These measurements are subject to change or cancellation. No responsibility is assumed for use of superseded or voided pages.

LAVATORY DESIGNED TO MEET ADA HANDICAPPED GUIDELINES WITH MOUNTING HEIGHT SET AT 864MM (34") ABOVE FINISHED FLOOR.

© 2008 AS America Inc.

American Standard

Style That Works Better

LUCERNE™ WALL-HUNG LAVATORY

VITREOUS CHINA

BARRIER FREE

0356.421 SINGLE CENTER HOLE FOR WALL HANGER OR CONCEALED ARMS

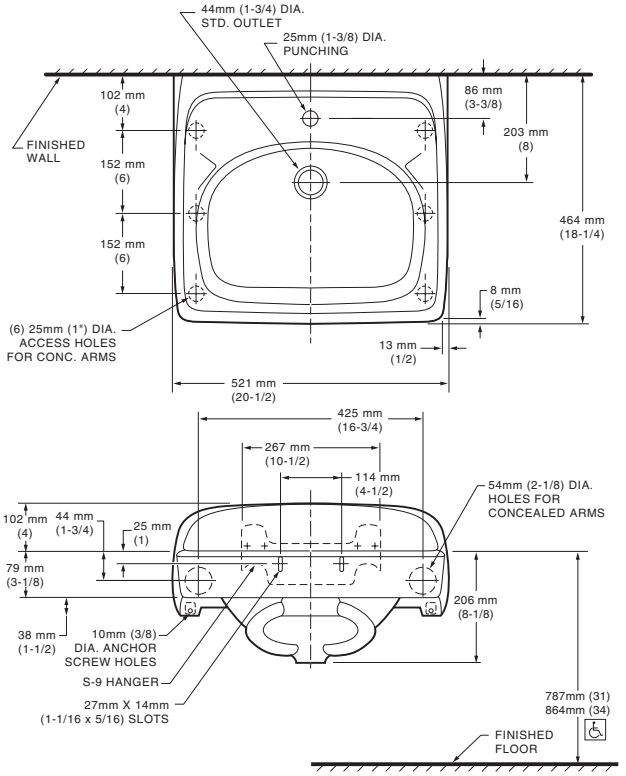

0356.137 SINGLE CENTER HOLE FOR WALL HANGER OR CONCEALED ARMS WITH EXTRA RIGHT HAND HOLE

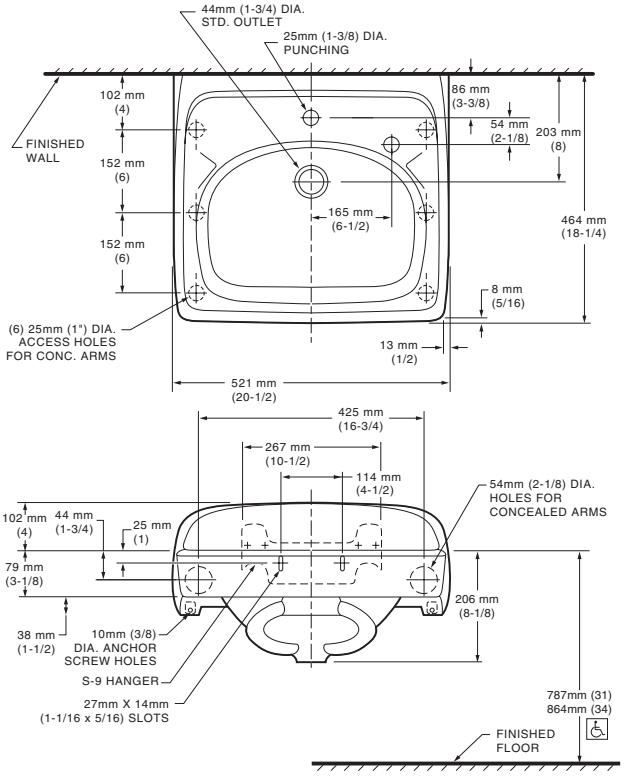

0356.115 SINGLE CENTER HOLE FOR WALL HANGER OR CONCEALED ARMS WITH EXTRA LEFT HAND HOLE

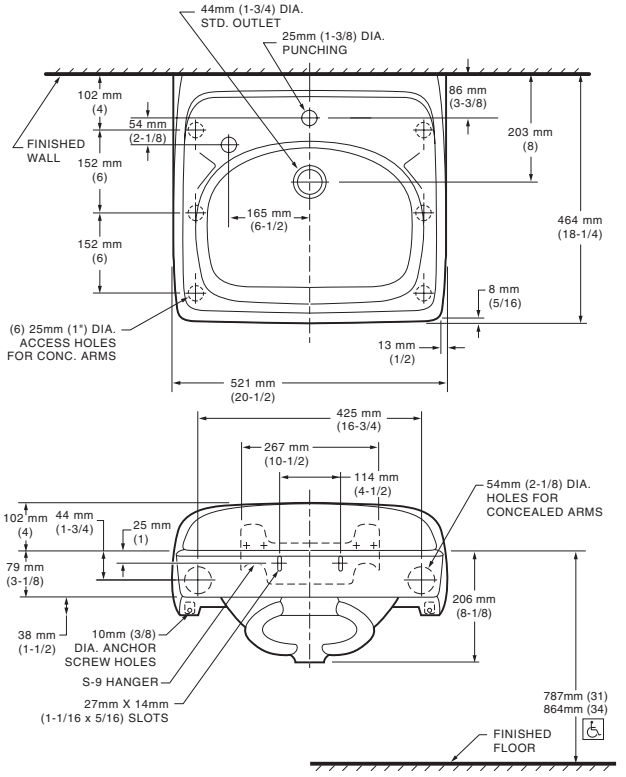

NOTES:
***** DIMENSIONS SHOWN FOR LOCATION OF SUPPLIES AND "P" TRAP ARE SUGGESTED.
PROVIDE SUITABLE REINFORCEMENT FOR ALL WALL SUPPORTS.
FITTINGS NOT INCLUDED AND MUST BE ORDERED SEPARATELY.
CONCEALED ARM SUPPORT AS REQUIRED TO BE FURNISHED BY OTHERS.

IMPORTANT: Dimensions of fixtures are nominal and may vary within the range of tolerances established by ANSI Standard A112.19.2. These measurements are subject to change or cancellation. No responsibility is assumed for use of superseded or voided pages.

LAVATORY DESIGNED TO MEET ADA HANDICAPPED GUIDELINES WITH MOUNTING HEIGHT SET AT 864MM (34") ABOVE FINISHED FLOOR.

© 2008 AS America Inc.

23-009 - Hines VA - CLC Bldg 217

Manual Sink Faucets
895-317GN2FCXKABCP

CHICAGO FAUCETS
Geberit Group

Product Type

Deck-mounted manual sink faucet with 4" centers

Features & Specifications

- 4" fixed centers
- 5-1/4" rigid/swing gooseneck spout with flow control
- Vandal Proof 4" wristblade handle
- Ceramic 1/4-turn operating cartridge, right-hand
- Ceramic 1/4-turn operating cartridge, left-hand
- ECAST® design provides durable construction with total lead content equal to or less than 0.25% by weighted average
- Complies with the requirements of the Buy American Act of 1933.

Performance Specification

- Rated Operating Pressure: 20-125 PSI
- Rated Operating Temperature: 40-140°F

Warranty

- 5-Year Limited Cartridge Warranty
- Lifetime Limited Faucet Warranty
- 1-Year Limited Finish Warranty

Codes & Standards

- ASME A112.18.1/CSA B125.1
- ADA ANSI/ICC A117.1
- NSF/ANSI 61, Section 9

Job Name _____

Item Number _____

Section/Tag _____

Model Specified _____

Architect _____

Engineer _____

Contractor _____

[ ] Submitted as Shown [ ] Submitted with Variations

Date _____

ECAST

ECAST products are intended for installation where state laws and local codes mandate lead content levels or in any location where lead content is a concern.

2100 South Clearwater Drive
Des Plaines, IL
P: 847/803-5000
F: 847/803-5454
Technical: 800/TEC-TRUE
www.chicagofaucets.com

23-009 - Hines VA - CLC Bldg 217

895-317GN2FCXKABCP

Architect/Engineer Specification

Chicago Faucets No. 895-317GN2FCXKABCP, Sink Faucet for hot and cold water, deck-mounted with 4" fixed centers, chrome plated. Rigid/swing gooseneck spout, 5-1/4" center-to-center, with 1.5 GPM (5.7 L/min) laminar flow control insert in spout inlet. 4" metal, vandal-proof, wristblade handles with sixteen-point, tapered broach and secured blue and red index buttons. Ceramic quarter-turn cartridge, features square, tapered stem. 1/2" NPSM supply inlets and coupling nut for 3/8" or 1/2" flexible riser. Mounting hardware included. ECAST® construction with less than 0.25% lead content by weighted average. This product meets ADA ANSI/ICC A117.1 requirements and is tested and certified to industry standards: ASME A112.18.1/CSA B125.1, and Certified to NSF/ANSI 61, Section 9 by CSA. (NOTE: This item replaces model 895-200022A.)

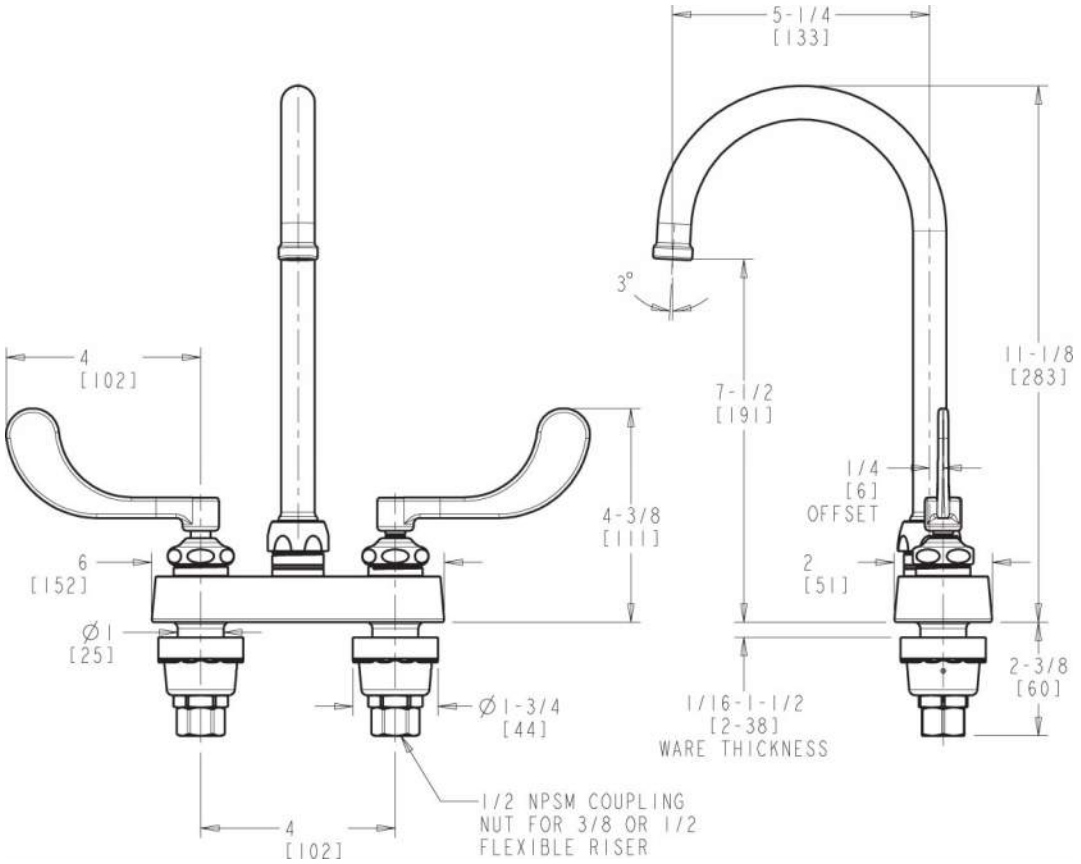

Operation and Maintenance

Installation should be in accordance with local plumbing codes. Flush all pipes thoroughly before installation. After installation, remove spout outlet or flow control and flush faucet thoroughly to clear any debris. Care should be taken when cleaning the product. Do not use abrasive cleaners, chemicals or solvents as they can result in surface damage. Use mild soap and warm water for cleaning and protecting the life of Chicago Faucet products. For specific operation and maintenance refer to the installation instructions and repair parts documents that are located at www.chicagofaucets.com.

Chicago Faucets, member of the Geberit Group, is the leading brand of commercial faucets and fittings in the United States, offering a complete range of products for schools, laboratories, hospitals, office buildings, food service, airports and sport facilities. Call 1.800.TECTRUE or 1.847.803.5000 Option 1 for installation or other technical assistance.

2100 South Clearwater Drive
Des Plaines, IL
P: 847/803-5000
F: 847/803-5454
Technical: 800/TEC-TRUE
www.chicagofaucets.com

Accessories & Parts
131-CABNF

CHICAGO FAUCETS
Geberit Group

Product Type

Thermostatic mixing valve for single or multiple faucet installations

Features & Specifications

- Adjustment cap with locking feature
- Brass body construction with corrosion-resistant internal components, includes plastic wall bracket
- Standard 3/8" compression inlets and outlets
- 3/8" compression tee inlet connection for cold water bypass feature, 3/8" compression angle outlet connection for convenient hot water hook-up
- Integral inlet check valves to protect against cross-flow
- ECAST® design provides durable cast brass construction with total lead content equal to or less than 0.25% by weighted average
- Complies with the requirements of the Buy American Act of 1933.

Warranty

- 1-Year Limited Cartridge Warranty
- Lifetime Limited Faucet Warranty
- 1-Year Limited Finish Warranty
- 1-Year Limited Material Warranty

Codes & Standards

- ASSE 1070/ASME A112.1070/CSA B125.70
- NSF/ANSI 372 Low Lead Content
- NSF/ANSI 61, Section 9

Job Name _____

Item Number _____

Section/Tag _____

Model Specified _____

Architect _____

Engineer _____

Contractor _____

[ ] Submitted as Shown [ ] Submitted with Variations

Date _____

ECAST

ECAST products are intended for installation where state laws and local codes mandate lead content levels or in any location where lead content is a concern.

2100 South Clearwater Drive
Des Plaines, IL
P: 847/803-5000
F: 847/803-5454
Technical: 800/TEC-TRUE
www.chicagofaucets.com

131-CABNF

Architect/Engineer Specification

Chicago Faucets No. 131-CABNF, ECAST® Thermostatic Mixing Valve. Standard 3/8 compression inlets and outlets. Integral inlet check valves to protect against cross-flow. Adjustment cap with locking feature. Brass body construction, includes wall bracket. Corrosion resistant internal components. Thermostatic wax element design. Thermostat controls both hot and cold water. Installs between the stop valves and the faucet for single or multiple faucet installations. Minimum supply pressure: 30psi (207 kPa); Hot inlet temperature: 120°F to 180°F (49°C to 82°C). Outlet water temperature will be less than hot water inlet temperature. Includes wall bracket. Minimum flow rate: 0.35 gpm (@ min. 20 psi). Maximum flow rate: 4.6 gpm (@ min. 125 psi). Temperature out: 80°F to 120°F (27°C to 49°C). 3/8 compression tee inlet connection for cold water bypass feature. 3/8 compression angle outlet connection for convenient hot water hook-up. ECAST® construction with less than 0.25% lead content by weighted average.

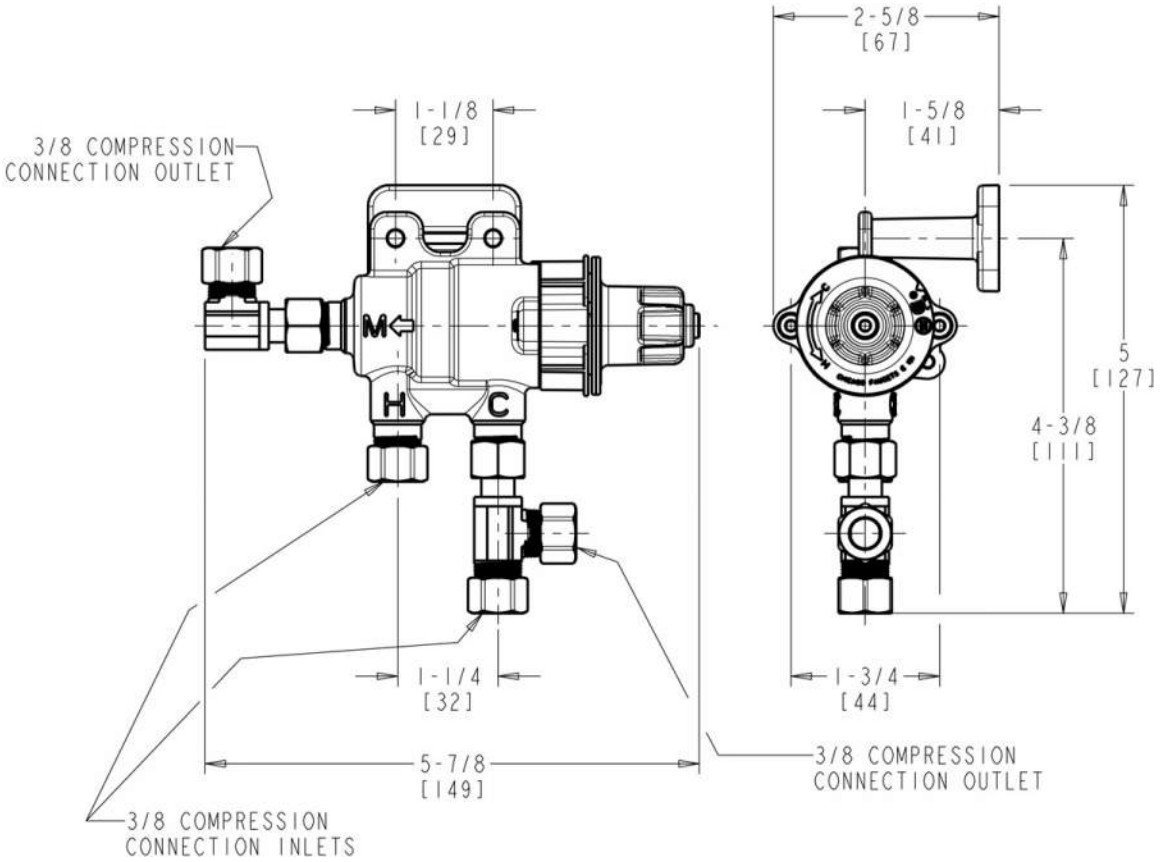

Operation and Maintenance

Installation should be in accordance with local plumbing codes. Flush all pipes thoroughly before installation. After installation, remove spout outlet or flow control and flush faucet thoroughly to clear any debris. Care should be taken when cleaning the product. Do not use abrasive cleaners, chemicals or solvents as they can result in surface damage. Use mild soap and warm water for cleaning and protecting the life of Chicago Faucet products. For specific operation and maintenance refer to the installation instructions and repair parts documents that are located at www.chicagofaucets.com.

Chicago Faucets, member of the Geberit Group, is the leading brand of commercial faucets and fittings in the United States, offering a complete range of products for schools, laboratories, hospitals, office buildings, food service, airports and sport facilities. Call 1.800.TECTRUE or 1.847.803.5000 Option 1 for installation or other technical assistance.

2100 South Clearwater Drive
Des Plaines, IL
P: 847/803-5000
F: 847/803-5454
Technical: 800/TEC-TRUE
www.chicagofaucets.com

23-009 - Hines VA - CLC Bldg 217

LAV -2 - Dementia Patient and Toilet rooms, High risk toilet rooms and Bariatric toilet rooms, undermount oval sink with programmable sensor battery faucet

American Standard

Style That Works Better

BARRIER FREE

OVALYN™ UNDERCOUNTER SINK

VITREOUS CHINA

OVALYN™ UNDERCOUNTER SINK

- Classic oval undermount sink
- Made from vitreous china
- Front overflow
- Supplied with mounting kit (047194-0070A) and template

❑ **0495.221 Unglazed rim**
435 x 359mm
(17-1/8" x 14-1/8")

❑ **0495.300 Glazed underside**

Bowl size:
382mm (15-1/16") wide
306mm (12-1/16") front to back
140mm (5-1/2") deep

❑ **0496.221 Unglazed rim**
489 x 413mm
(19-1/4" x 16-1/4")

❑ **0496.300 Glazed underside**

Bowl size:
432mm (17") wide
356mm (14") front to back
140mm (5-1/2") deep

SEE REVERSE FOR ROUGHING-IN DIMENSIONS

❑ **0497.221 Unglazed rim**
546 x 441mm
(21-1/2" x 17-3/8")

❑ **0497.300 Glazed underside**

Bowl size:
483mm (19") wide
391mm (15-3/8") front to back
140mm (5-1/2") deep

Compliance Certifications -
Meets or Exceeds the Following Specifications:
- ASME A112.19.2M for Vitreous China Fixtures
- CAN/CSA B45 series

To Be Specified:
❑ Color: ❑ White ❑ Bone ❑ Linen
❑ Silver ❑ Fawn Beige ❑ Black
❑ Faucet*:
❑ Faucet Finish:
❑ Supplies:
❑ 1-1/4" Trap:

* See faucet section for additional models available

© 2008 AS America Inc.

American Standard

Style That Works Better

BARRIER FREE

OVALYN™ UNDERCOUNTER SINK

VITREOUS CHINA

0496/0497

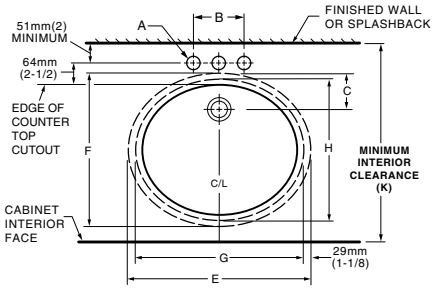

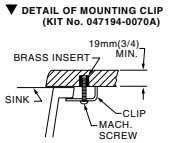

REFER TO INSTRUCTIONS PROVIDED WITH KIT FOR ADDITIONAL INFORMATION

NOTES:
* DIMENSIONS SHOWN FOR LOCATION OF SUPPLIED AND "P" TRAP ARE SUGGESTED.
▼ UNDERCOUNTER MOUNTING KIT SUPPLIED WITH SINK.
PLEASE NOTE MINIMUM INTERIOR CLEARANCE DIMENSION (K).
FITTINGS NOT INCLUDED AND MUST BE ORDERED SEPARATELY.
USE ENCLOSED TEMPLATE FOR COUNTERTOP CUTOUT
SEALING COMPOUND SUPPLIED BY OTHERS.

IMPORTANT: Dimensions of fixtures are nominal and may vary within the range of tolerances established by ANSI Standard A112.19.2. These measurements are subject to change or cancellation. No responsibility is assumed for use of superseded or voided pages.

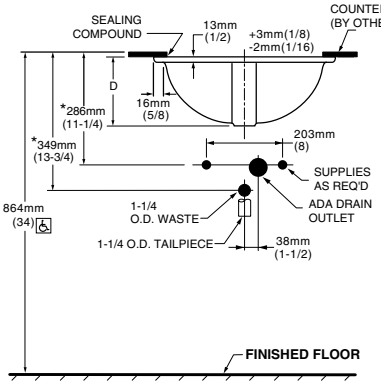

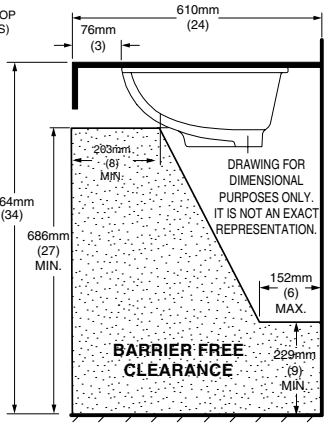

MEETS THE AMERICANS WITH DISABILITIES ACT GUIDELINES AND ANSI A117.1 ACCESSIBLE AND USEABLE BUILDINGS AND FACILITIES - CHECK LOCAL CODES.
Countertop 864mm (34") from finished floor. Lavatory installed 76mm (3") from front edge of countertop. Countertop thickness to be 25mm (1") maximum.

FITTING	A	B
CENTERSET	1-1/4 (32mm)	4 (102mm)
SPREAD	1-3/8 (35mm)	8 (203mm)

CAT. NO.	E	F	G	H	C	D	J	K
0496.221	489mm (19-1/4)	413mm (16-1/4)	432mm (17)	356mm (14)	103mm (4-1/16)	182mm (7-3/16)	16mm (5/8)	500mm (19-11/16)
0497.221	546mm (21-1/2)	441mm (17-3/8)	483mm (19)	391mm (15-3/8)	95mm (3-3/4)	191mm (7-1/2)	19mm (3/4)	534mm (21-1/16)

0495

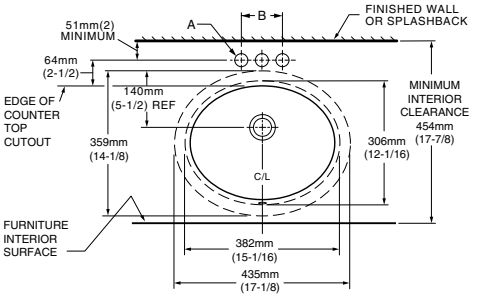

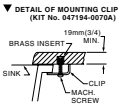

REFER TO INSTRUCTIONS PROVIDED WITH KIT FOR ADDITIONAL INFORMATION

FITTING	A	B
CENTERSET	1-1/4 (32mm)	4 (102mm)
SPREAD	1-3/8 (35mm)	8 (203mm)

NOTES:
USE ENCLOSED TEMPLATE FOR COUNTER TOP CUTOUT.
FITTINGS NOT INCLUDED WITH FIXTURE AND MUST BE ORDERED SEPARATELY.
* DIMENSIONS SHOWN FOR LOCATION OF SUPPLIED AND "P" TRAP ARE SUGGESTED.
▼ UNDERCOUNTER MOUNTING KIT SUPPLIED WITH SINK.
PLEASE NOTE MINIMUM INTERIOR CLEARANCE DIMENSION (K).
SEALING COMPOUND SUPPLIED BY OTHERS.

IMPORTANT: Dimensions of fixtures are nominal and may vary within the range of tolerances established by ANSI Standard A112.19.2. These measurements are subject to change or cancellation. No responsibility is assumed for use of superseded or voided pages

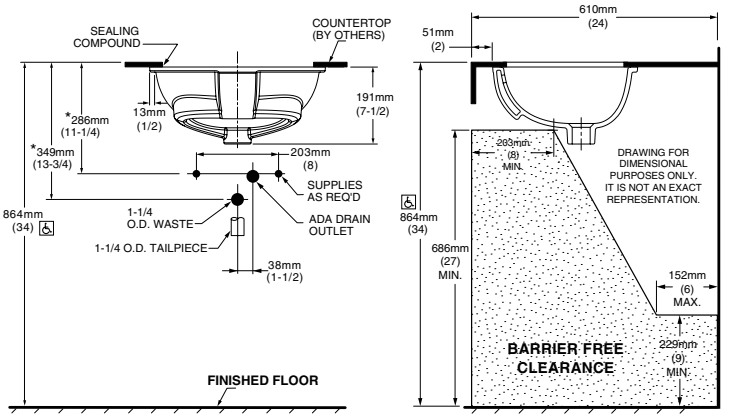

MEETS THE AMERICANS WITH DISABILITIES ACT GUIDELINES AND ANSI A117.1 ACCESSIBLE AND USABLE BUILDINGS AND FACILITIES - CHECK LOCAL CODES.
Countertop 864mm (34") from finished floor. Lavatory installed 51mm (2") from front edge of countertop. Countertop thickness to be 25mm (1") maximum.

© 2008 AS America Inc.

SLOAN®

OPTIMA® SENSOR FAUCET
EAF-150

OPTIONS

Power Type
- [x] Battery

Body Type
- [x] Mid

Mounting
- [x] Deck

Power Supply
- [x] Battery (BAT)

Sensor Type
- [x] Infrared (IR)

Flow Rate
- [x] 1.5 gpm (6 Lpm) (1.5GPM)
- [ ] 0.35 gpm (1 Lpm) (0.35GPM)
- [ ] 0.5 gpm (2 Lpm) (0.5GPM)
- [ ] 1.0 gpm (4 Lpm) (1.0GPM)

Spray Type
- [ ] Aerated (AER)
- [x] Multi-Laminar (MLM)

Finish
- [x] Polished Chrome (CP)

Control Access
- [x] Above Deck

Mixer
- [x] Integrated Side Mixer (ISM)
- [ ] Mixer Not Included

Special Features
- [ ] IQ Click (IQ)
- [x] 10s Timeout (10S)
- [ ] 12s Timeout (12S)

Compliances & Certifications
- [ ] ADA Compliant
- [ ] ASME A112.18.1 Compliant
- [ ] CEC Compliant
- [ ] Proposition 65
- [ ] TAS
- [ ] UPC Certified
- [ ] UPC Low Lead Compliant
- [ ] cUPC Certified
- [ ] cUPC Low Lead Compliant
- [ ] NYC604.4

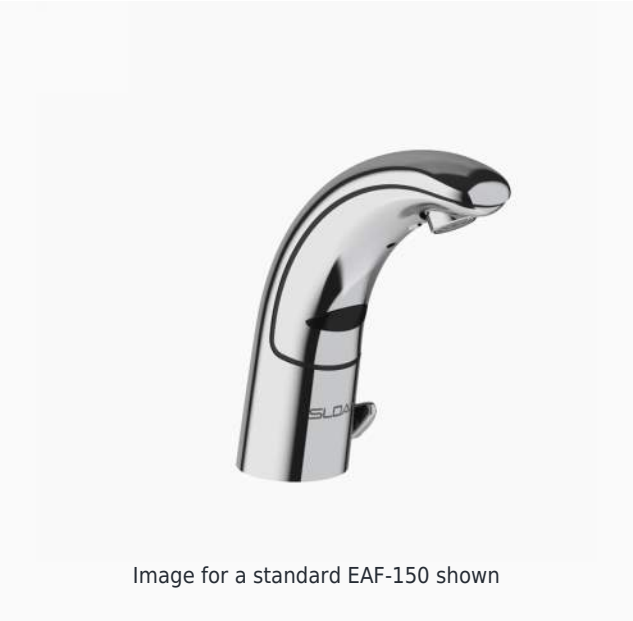

Image for a standard EAF-150 shown

DESCRIPTION
Optima® Battery-Powered Deck-Mounted Mid Body Faucet

FEATURES
Commercial Grade, ADA Compliant, Electronic, Sensor-Activated, Die-Cast Metal Hand Washing Faucet with the following features:

- Double Infrared Sensors with Automatic Setup and Indicator Light
- Automatic Self-adapting Sensor Technology
- Low Battery Indicator
- Magnetic Solenoid Valve
- Water Supply Connection with Flexible High-pressure Hose and Strainer
- 6 Volt Lithium 2CR5 Commercial Battery included
- Appropriate Mounting Hardware included
- Optional 24 Hour Sentinel Activation
- 3 year limited warranty

DOWNLOADS
- EAF 100/150 Installation Instructions
- EAF 100/150 (SP) Installation Instructions
- Faucet Spray Heads Repair and Maintenance Guide
- Optima Plus EAF 150 Repair and Maintenance Guide
- Additional Downloads

Sloan 10500 Seymour Ave, Franklin Park, IL 60131
Phone: 800.982.5839 • Fax: 800.447.8329 • sloan.com

Downloaded 07/05/19 • Revised 12/10/18 • View Latest Version

NOTES

For product line drawings, view model-specific spec sheets.

All information contained within this document subject to change without notice.

Find a matching soap dispenser for this faucet.
Find a compatible sink for this faucet.

Sloan 10500 Seymour Ave, Franklin Park, IL 60131
Phone: 800.982.5839 • Fax: 800.447.8329 • sloan.com

Downloaded 07/05/19 • Revised 12/10/18 • View Latest Version

23-009 - Hines VA - CLC Bldg 217

Accessories & Parts
131-CABNF

CHICAGO FAUCETS
Geberit Group

Product Type

Thermostatic mixing valve for single or multiple faucet installations

Features & Specifications

- Adjustment cap with locking feature
- Brass body construction with corrosion-resistant internal components, includes plastic wall bracket
- Standard 3/8" compression inlets and outlets
- 3/8" compression tee inlet connection for cold water bypass feature, 3/8" compression angle outlet connection for convenient hot water hook-up
- Integral inlet check valves to protect against cross-flow
- ECAST® design provides durable cast brass construction with total lead content equal to or less than 0.25% by weighted average
- Complies with the requirements of the Buy American Act of 1933.

Warranty

- 1-Year Limited Cartridge Warranty
- Lifetime Limited Faucet Warranty
- 1-Year Limited Finish Warranty
- 1-Year Limited Material Warranty

Codes & Standards

- ASSE 1070/ASME A112.1070/CSA B125.70
- NSF/ANSI 372 Low Lead Content
- NSF/ANSI 61, Section 9

Job Name _____

Item Number _____

Section/Tag _____

Model Specified _____

Architect _____

Engineer _____

Contractor _____

[ ] Submitted as Shown [ ] Submitted with Variations

Date _____

ECAST

ECAST products are intended for installation where state laws and local codes mandate lead content levels or in any location where lead content is a concern.

2100 South Clearwater Drive
Des Plaines, IL
P: 847/803-5000
F: 847/803-5454
Technical: 800/TEC-TRUE
www.chicagofaucets.com

131-CABNF

CHICAGO FAUCETS
Geberit Group

Architect/Engineer Specification

Chicago Faucets No. 131-CABNF, ECAST® Thermostatic Mixing Valve. Standard 3/8 compression inlets and outlets. Integral inlet check valves to protect against cross-flow. Adjustment cap with locking feature. Brass body construction, includes wall bracket. Corrosion resistant internal components. Thermostatic wax element design. Thermostat controls both hot and cold water. Installs between the stop valves and the faucet for single or multiple faucet installations. Minimum supply pressure: 30psi (207 kPa); Hot inlet temperature: 120°F to 180°F (49°C to 82°C). Outlet water temperature will be less than hot water inlet temperature. Includes wall bracket. Minimum flow rate: 0.35 gpm (@ min. 20 psi). Maximum flow rate: 4.6 gpm (@ min. 125 psi). Temperature out: 80°F to 120°F (27°C to 49°C). 3/8 compression tee inlet connection for cold water bypass feature. 3/8 compression angle outlet connection for convenient hot water hook-up. ECAST® construction with less than 0.25% lead content by weighted average.

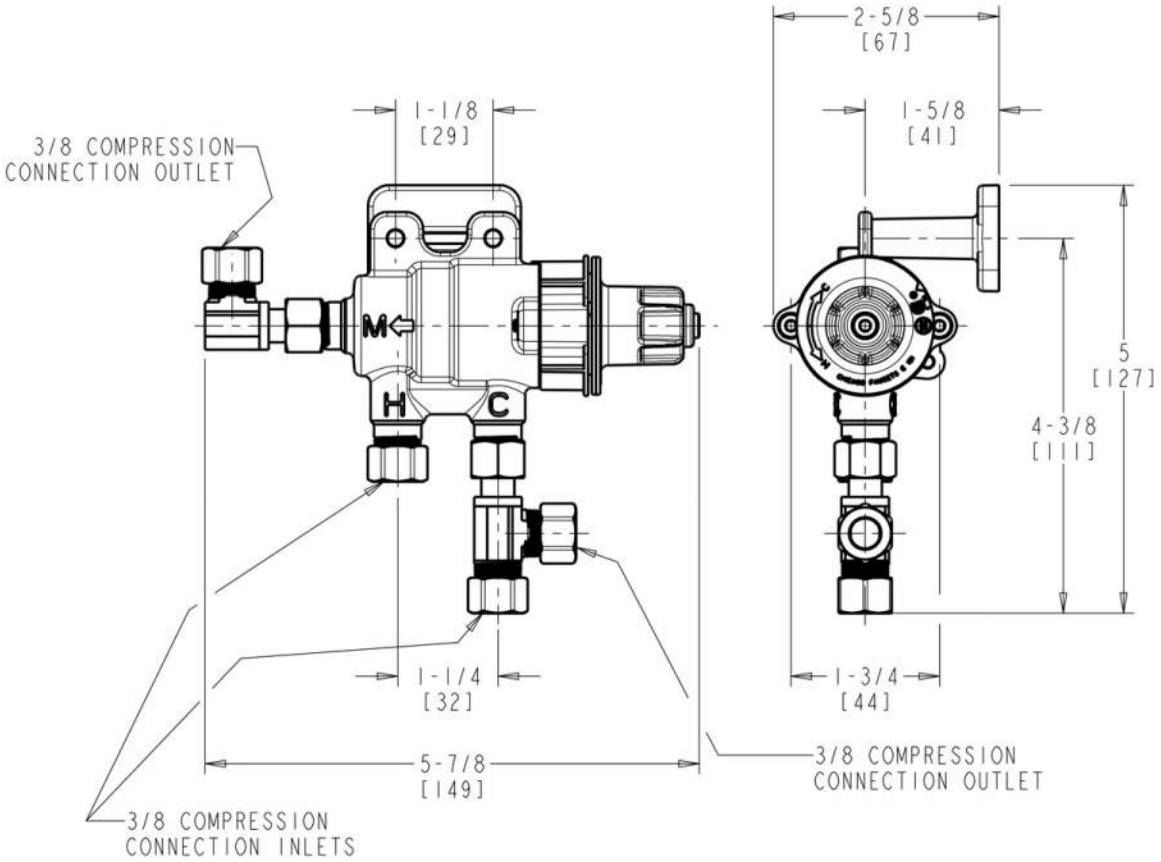

Operation and Maintenance

Installation should be in accordance with local plumbing codes. Flush all pipes thoroughly before installation. After installation, remove spout outlet or flow control and flush faucet thoroughly to clear any debris. Care should be taken when cleaning the product. Do not use abrasive cleaners, chemicals or solvents as they can result in surface damage. Use mild soap and warm water for cleaning and protecting the life of Chicago Faucet products. For specific operation and maintenance refer to the installation instructions and repair parts documents that are located at www.chicagofaucets.com.

Chicago Faucets, member of the Geberit Group, is the leading brand of commercial faucets and fittings in the United States, offering a complete range of products for schools, laboratories, hospitals, office buildings, food service, airports and sport facilities. Call 1.800.TECTRUE or 1.847.803.5000 Option 1 for installation or other technical assistance.

2100 South Clearwater Drive
Des Plaines, IL
P: 847/803-5000
F: 847/803-5454
Technical: 800/TEC-TRUE
www.chicagofaucets.com

BUILT TO LAST, IN AMERICA

LAV-3 - Bariatric rooms Bariatric lavatory wall mounted with programmable sensor battery faucet

WILLOUGHBY 3123 SERIES

Bariatric Lavatory

Designed specifically for bariatric patients in healthcare environments.

Finally, an aesthetically pleasing lavatory that is consistent with FGI's *Guidelines for Design of Construction of Health Care Facilities* and provides a **1,000 lb. weight rating** to properly serve bariatric patients.

Floor-mounted pedestal

Constructed of welded Type 304 stainless steel with eight decorative overlay choices.

Faucet choices

Choose either wrist handle or infrared operation.

Aquasurf® durability

Our sanitary solid surface lavatory is cast as a one-piece fixture that is easily cleaned, maintained, and repaired.

REVIT details available at www.willoughby-ind.com

WILLOUGHBY
COUNT ON US.

800.428.4065 | www.willoughby-ind.com

Willoughby Bariatric Lavatory

BHS-3123

ADA Compliant

Controls
- Wrist handle or infrared style faucet available

Cabinet
- Constructed of solid marine-grade high-density polyethylene, not laminate
- Optional thermo-foil wrapped simulated wood grain limits exposed seams

Pedestal
- Constructed of welded Type 304 stainless steel for strength and rigidity

Lavatory Deck
- Aesthetically pleasing sanitary Aquasurf® solid surface material
- Integrated lavatory bowl
- Increased surface area
- Large 6" deep, D-shaped bowl

1,000 lb. weight rating*

* Engineered to withstand up to 1000 lb. vertical load at the front of the lavatory deck.

Lavatory Deck Color Options

Sandstone | Bone | Red Coral | Black Granite | White Granite

Grey Granite | Glacier White | Nocturnal Blue | Sea Green

Side Panel Color Options

Arctic White | SanShade | White White | Majestic Walnut*

Sea Foam | Kasei Maple* | Amati Walnut*

*Premium finishes

Technical Specification: Model BHS-3123

Standard ..... 31" wide x 22.625" deep x 44.75" tall

REVIT details available at www.willoughby-ind.com

Willoughby Industries, Inc.
5105 West 78th Street, Indianapolis, IN 46268
800.428.4065 | fax 317.875.0837
www.willoughby-ind.com

MADE IN THE USA

Willoughby Industries, Inc. reserves the right to make changes without notice in design, specifications, and models. © Willoughby Industries, Inc., All rights reserved.

SLOAN®

OPTIMA® SENSOR FAUCET
EAF-150

OPTIONS

Power Type
- [x] Battery

Body Type
- [x] Mid

Mounting
- [x] Deck

Power Supply
- [x] Battery (BAT)

Sensor Type
- [x] Infrared (IR)

Flow Rate
- [x] 1.5 gpm (6 Lpm) (1.5GPM)
- [ ] 0.35 gpm (1 Lpm) (0.35GPM)
- [ ] 0.5 gpm (2 Lpm) (0.5GPM)
- [ ] 1.0 gpm (4 Lpm) (1.0GPM)

Spray Type
- [ ] Aerated (AER)
- [x] Multi-Laminar (MLM)

Finish
- [x] Polished Chrome (CP)

Control Access
- [x] Above Deck

Mixer
- [x] Integrated Side Mixer (ISM)
- [ ] Mixer Not Included

Special Features
- [ ] IQ Click (IQ)
- [x] 10s Timeout (10S)
- [ ] 12s Timeout (12S)

Compliances & Certifications
- [ ] ADA Compliant
- [ ] ASME A112.18.1 Compliant
- [ ] CEC Compliant
- [ ] Proposition 65
- [ ] TAS
- [ ] UPC Certified
- [ ] UPC Low Lead Compliant
- [ ] cUPC Certified
- [ ] cUPC Low Lead Compliant
- [ ] NYC604.4

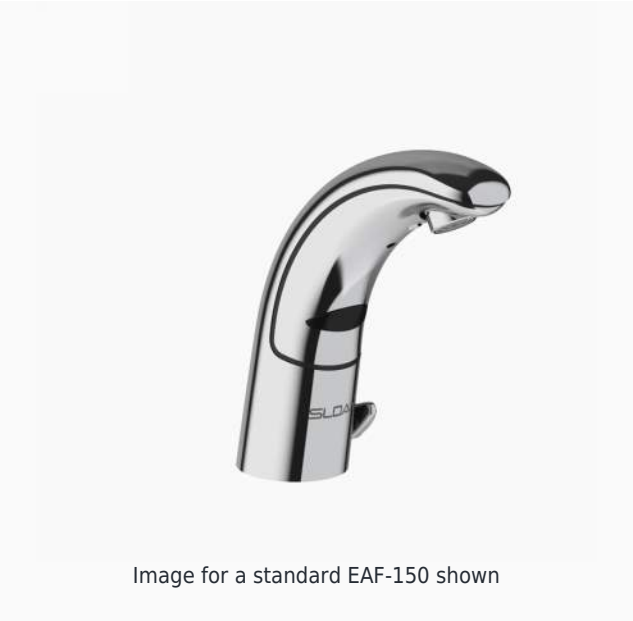

Image for a standard EAF-150 shown

DESCRIPTION
Optima® Battery-Powered Deck-Mounted Mid Body Faucet

FEATURES
Commercial Grade, ADA Compliant, Electronic, Sensor-Activated, Die-Cast Metal Hand Washing Faucet with the following features:

- Double Infrared Sensors with Automatic Setup and Indicator Light
- Automatic Self-adapting Sensor Technology
- Low Battery Indicator
- Magnetic Solenoid Valve
- Water Supply Connection with Flexible High-pressure Hose and Strainer
- 6 Volt Lithium 2CR5 Commercial Battery included
- Appropriate Mounting Hardware included
- Optional 24 Hour Sentinel Activation
- 3 year limited warranty

DOWNLOADS
- EAF 100/150 Installation Instructions
- EAF 100/150 (SP) Installation Instructions
- Faucet Spray Heads Repair and Maintenance Guide
- Optima Plus EAF 150 Repair and Maintenance Guide
- Additional Downloads

Sloan 10500 Seymour Ave, Franklin Park, IL 60131
Phone: 800.982.5839 • Fax: 800.447.8329 • sloan.com

Downloaded 07/05/19 • Revised 12/10/18 • View Latest Version

NOTES

For product line drawings, view model-specific spec sheets.

All information contained within this document subject to change without notice.

Find a matching soap dispenser for this faucet.
Find a compatible sink for this faucet.

Sloan 10500 Seymour Ave, Franklin Park, IL 60131
Phone: 800.982.5839 • Fax: 800.447.8329 • sloan.com

Downloaded 07/05/19 • Revised 12/10/18 • View Latest Version

23-009 - Hines VA - CLC Bldg 217

Accessories & Parts
131-CABNF

Product Type

Thermostatic mixing valve for single or multiple faucet installations

Features & Specifications

- Adjustment cap with locking feature
- Brass body construction with corrosion-resistant internal components, includes plastic wall bracket
- Standard 3/8" compression inlets and outlets
- 3/8" compression tee inlet connection for cold water bypass feature, 3/8" compression angle outlet connection for convenient hot water hook-up
- Integral inlet check valves to protect against cross-flow
- ECAST® design provides durable cast brass construction with total lead content equal to or less than 0.25% by weighted average
- Complies with the requirements of the Buy American Act of 1933.

Warranty

- 1-Year Limited Cartridge Warranty
- Lifetime Limited Faucet Warranty
- 1-Year Limited Finish Warranty
- 1-Year Limited Material Warranty

Codes & Standards

- ASSE 1070/ASME A112.1070/CSA B125.70
- NSF/ANSI 372 Low Lead Content
- NSF/ANSI 61, Section 9

Job Name _____

Item Number _____

Section/Tag _____

Model Specified _____

Architect _____

Engineer _____

Contractor _____

[ ] Submitted as Shown [ ] Submitted with Variations

Date _____

ECAST products are intended for installation where state laws and local codes mandate lead content levels or in any location where lead content is a concern.

2100 South Clearwater Drive
Des Plaines, IL
P: 847/803-5000
F: 847/803-5454
Technical: 800/TEC-TRUE
www.chicagofaucets.com

131-CABNF

CHICAGO FAUCETS
Geberit Group

Architect/Engineer Specification

Chicago Faucets No. 131-CABNF, ECAST® Thermostatic Mixing Valve. Standard 3/8 compression inlets and outlets. Integral inlet check valves to protect against cross-flow. Adjustment cap with locking feature. Brass body construction, includes wall bracket. Corrosion resistant internal components. Thermostatic wax element design. Thermostat controls both hot and cold water. Installs between the stop valves and the faucet for single or multiple faucet installations. Minimum supply pressure: 30psi (207 kPa); Hot inlet temperature: 120°F to 180°F (49°C to 82°C). Outlet water temperature will be less than hot water inlet temperature. Includes wall bracket. Minimum flow rate: 0.35 gpm (@ min. 20 psi). Maximum flow rate: 4.6 gpm (@ min. 125 psi). Temperature out: 80°F to 120°F (27°C to 49°C). 3/8 compression tee inlet connection for cold water bypass feature. 3/8 compression angle outlet connection for convenient hot water hook-up. ECAST® construction with less than 0.25% lead content by weighted average.

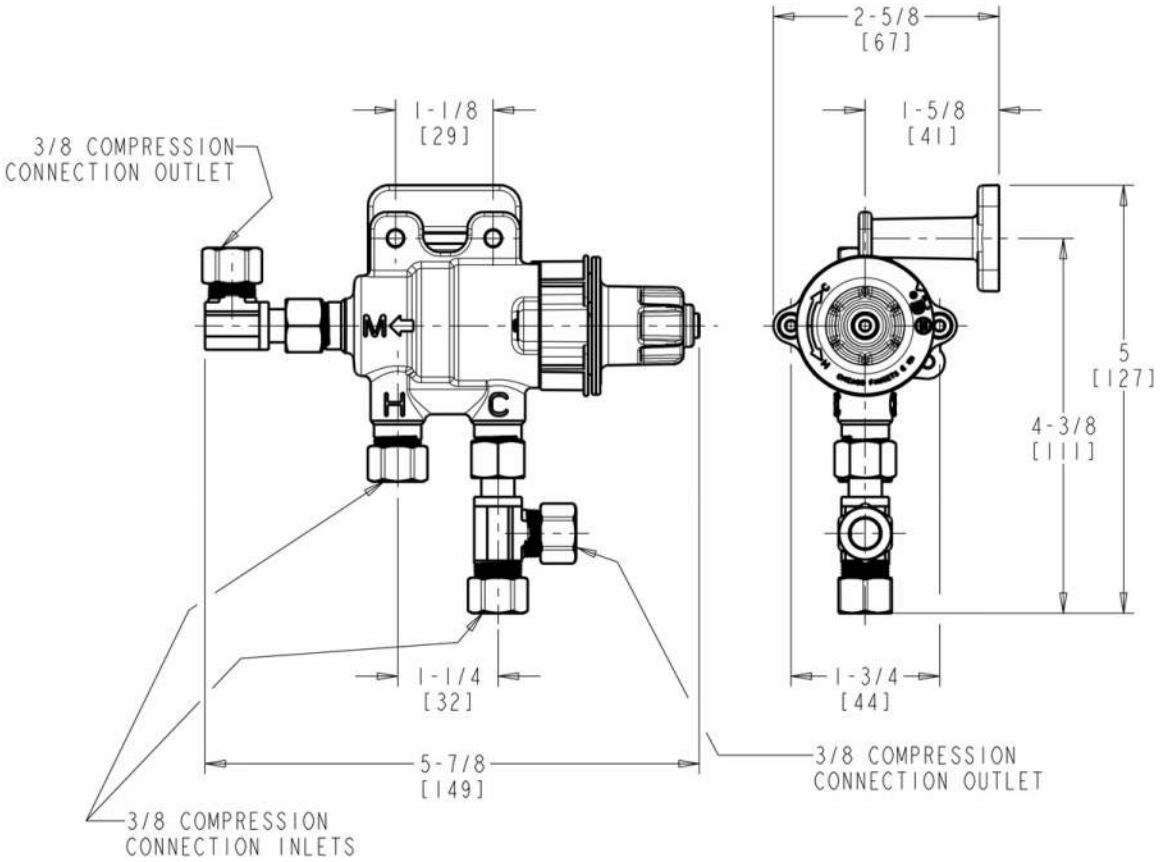

Operation and Maintenance

Installation should be in accordance with local plumbing codes. Flush all pipes thoroughly before installation. After installation, remove spout outlet or flow control and flush faucet thoroughly to clear any debris. Care should be taken when cleaning the product. Do not use abrasive cleaners, chemicals or solvents as they can result in surface damage. Use mild soap and warm water for cleaning and protecting the life of Chicago Faucet products. For specific operation and maintenance refer to the installation instructions and repair parts documents that are located at www.chicagofaucets.com.

Chicago Faucets, member of the Geberit Group, is the leading brand of commercial faucets and fittings in the United States, offering a complete range of products for schools, laboratories, hospitals, office buildings, food service, airports and sport facilities. Call 1.800.TECTRUE or 1.847.803.5000 Option 1 for installation or other technical assistance.

2100 South Clearwater Drive
Des Plaines, IL
P: 847/803-5000
F: 847/803-5454
Technical: 800/TEC-TRUE
www.chicagofaucets.com

23-009 - Hines VA - CLC Bldg 217

UR-1 - Public Toilet - Wall Mounted and manual flush valve

WASHBROOK® FloWise® 0.5 GPF HIGH EFFICIENCY URINAL SYSTEM

MANUAL FLUSH VALVE

BARRIER FREE

WASHBROOK® FloWise® 0.5 GPF HIGH EFFICIENCY URINAL SYSTEM

6590.501 0.5 gpf Exposed Top Spud Urinal and Manual Piston-Type Urinal Flush Valve

URINAL:
- Vitreous china
- Ultra High Efficiency. Operates in the range of 0.125 gpf to 1.0 gpf (0.5 Lpf to 3.8 Lpf)
- Flushing rim
- Elongated 14" rim from finished wall
- Washout flush action
- Extended sides for privacy
- 3/4" inlet spud
- Outlet connection threaded 2" inside (NPTF)
- Strainer included
- Meets ASME flush requirements at 0.125 to 1.0 gpf
- Model 6590.001 top spud

MANUAL FLUSH VALVE:
- Self-cleaning brass piston with integral wiper spring prevents clogging and reduces maintenance
- Piston operation delivers superior flush accuracy and repeatability
- Piston valve remains closed and does not need to be reset after loss of water pressure
- Non-hold open handle
- Positive seal ensures leak-free performance
- No external volume adjustment
- Durable chrome-plated cast brass construction is ideal for commercial applications
- Chloramine-resistant EPDM seals
- Adjustable tailpiece for rough-in flexibility
- Can be installed left or right hand
- Model 6045.051 for 3/4" top spud urinals, 0.5 gpf

Includes:
- 2 Wall hangers
- 3/4" I.P.S. angle stop with back-flow protection and vandal-resistant cap
- Sweat solder kit including cover tube and wall flange
- High back pressure vacuum breaker with down tube
- Spud coupling and flange for 3/4" top spud

SEE REVERSE FOR ROUGHING-IN DIMENSIONS

High-Efficiency Urinal Systems:
- 50% water savings when compared to a 1.0 gpf urinal system

Operating Pressure:
20 psi (flowing) - 80 psi (static)

Flow Requirement:
10gpm (37.9 L/min.)

Nominal Fixture Dimensions:
360 x 480 x 664mm (14-1/8" x 18-7/8" x 26-1/8")

WaterSense Meets EPA Criteria
Certified by IAPMO R&T

© 2016 AS America Inc.

WASHBROOK® FloWise® 0.5 GPF HIGH EFFICIENCY URINAL SYSTEM

MANUAL FLUSH VALVE

BARRIER FREE

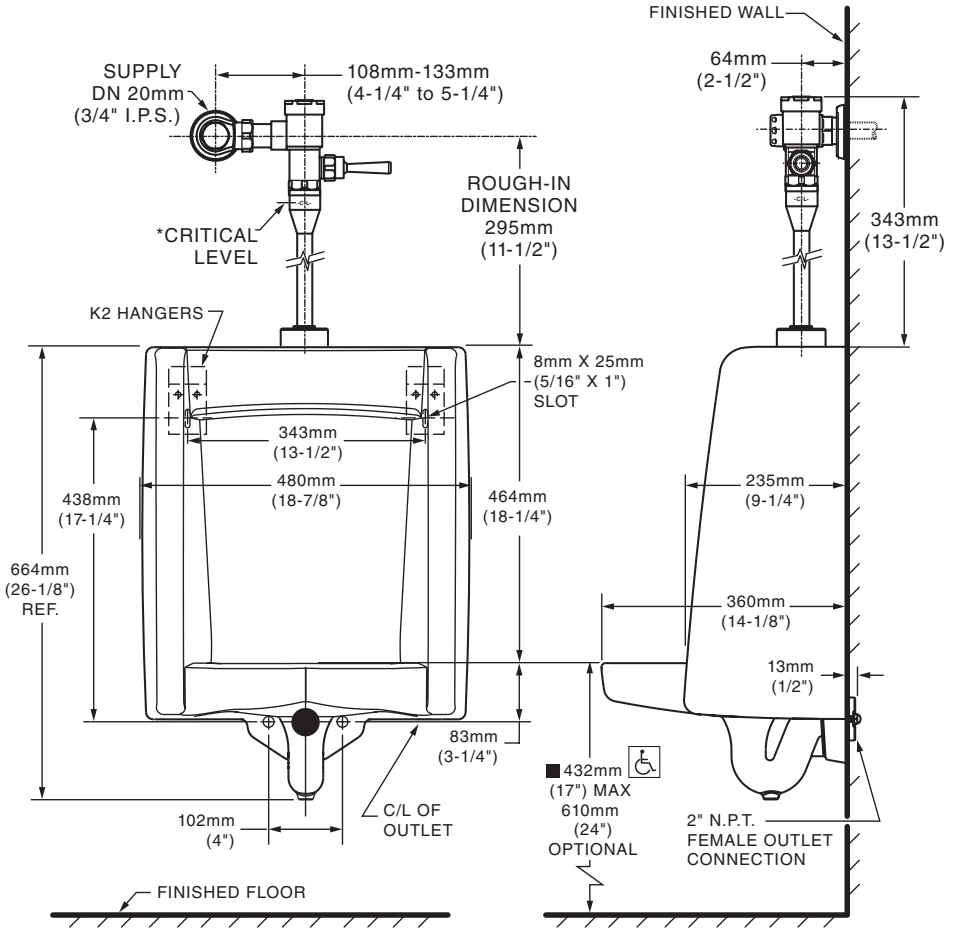

*Note: The Critical Line (-C-L-) on Vacuum Breaker must typically be a minimum of 6" (152mm) above fixture. Consult Codes for details.

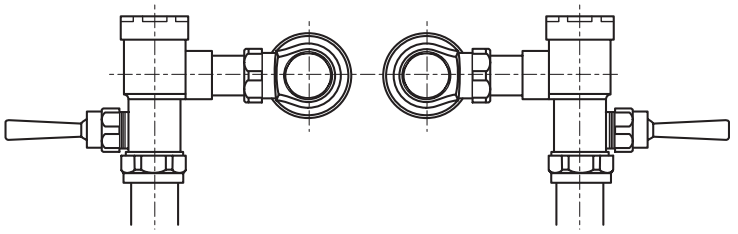

VALVE LEFT or RIGHT HAND INSTALLATION

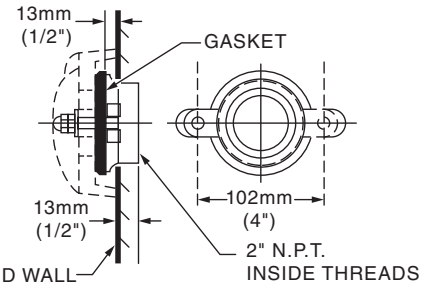

DETAIL OF OUTLET CONNECTION

Fixture Compliance Certifications -
Meets or Exceeds the Following Specifications:

- ASME A112.19.2-2008/CSA B45.1-08 for Vitreous China Fixtures

Valve Listings:

- ASSE 1037
- ANSI/ASME A112.19.2
- ADA Compliant

NOTES:
PROVIDE SUITABLE REINFORCEMENT FOR ALL WALL SUPPORTS.

IMPORTANT: Dimensions of fixtures are nominal and may vary within the range of tolerances established by ANSI Standard A112.19.2. These measurements are subject to change or cancellation. No responsibility is assumed for use of superseded or voided pages.

MEETS THE AMERICANS WITH DISABILITIES ACT GUIDELINES AND ANSI A117.1 ACCESSIBLE AND USABLE BUILDINGS AND FACILITIES - CHECK LOCAL CODES.

- When installed so top of rim is 432mm (17") MAXIMUM from finished floor.

© 2016 AS America Inc.

PART OF LIXIL

spec_6590.501 Washbrook FW 0.5gpf Rev. B 8/16

23-009 - Hines VA - CLC Bldg 217

ELKAY®
SPECIFICATIONS

Elkay Lustertone Classic Stainless Steel 25" x 21-1/4" x 5-1/2" Single Bowl Drop-in ADA Sink
Model(s) LRAD252155

PRODUCT SPECIFICATIONS

Elkay Lustertone™ Classic Stainless Steel 25" x 21-1/4" x 5-1/2", Single Bowl Drop-in ADA Sink. Sink is manufactured from 18 gauge 304 Stainless Steel with a Lustrous Satin finish, Rear Center drain placement, and Bottom only pads.

Installation Type:	Drop-in
Material:	304 Stainless Steel
Finish:	Lustrous Satin
Gauge:	18
Sound Deadening:	Bottom only pads
Number of Bowls:	1
Sink Dimensions:	25" x 21-1/4" x 5-1/2"
Bowl 1 Dimensions:	21" x 15-3/4" x 5-3/8"
Drain Size:	3-1/2" (89mm)
Drain Location:	Rear Center
Minimum Cabinet Size:	30"
Mounting Hardware:	Part # 64090012 included for countertops up to 3/4" (19mm) thick
Template Included:	No
Cutout Template #:	1000001245

Template is available for download at elkay.com. CAD software will be required to open the template.

Cutout Dimensions for Drop-in Installation:
24-3/8" x 20-5/8" (619mm x 524mm) with 1-1/2" (38mm) corner radius

Custom Options	
□ Type 316 Stainless Steel	
Drain Location	
□ Right Rear	□ Left Rear
□ Center	☒ Center Rear
Overflow Location	
□ Front	□ Rear
Alternate Punching	
□ Faucet Model:	□ Punch Required:
Sink Size	
□ Bowl Depth:	□ Drainboard Width:

SK-1 - EXAM ROOMS, FAMILY AND NOURISHMENT ROOM - MANUAL GOOSENECK FAUCET

AMERICAN PRIDE. A LIFETIME TRADITION.
Like your family, the Elkay family has values and traditions that endure. For almost a century, Elkay has been a family-owned and operated company, providing thousands of jobs that support our families and communities.

Product Compliance: ADA & ICC A117.1
ASME A112.19.3/CSA B45.4
Buy American Act

Sinks are listed by IAPMO® as meeting the applicable requirements of the Uniform Plumbing Code®, International Plumbing Code®, and National Plumbing Code of Canada.

Complies with ADA & ICC A117.1 accessibility requirements when installed according to the requirements outlined in these standards.

Clean and Care Manual (PDF)
Installation Instructions (PDF)
Warranty (PDF)

Similar models are available with: 4" 4-1/2" 5" 6" and 6-1/2" depths, CuVerro antimicrobial copper, Quick-Clip Mounting System

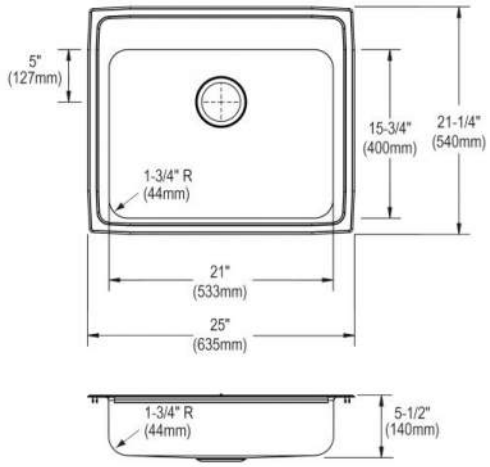

PART:_____QTY: _____
PROJECT:_____
CONTACT:_____
DATE:_____
NOTES:_____
APPROVAL:_____

In keeping with our policy of continuing product improvement, Elkay reserves the right to change product specifications without notice. Please visit elkay.com for the most current version of Elkay product specification sheets. This specification describes an Elkay product with design, quality, and functional benefits to the user. When making a comparison of other producers' offerings, be certain these features are not overlooked.

Hole Drilling Configurations:

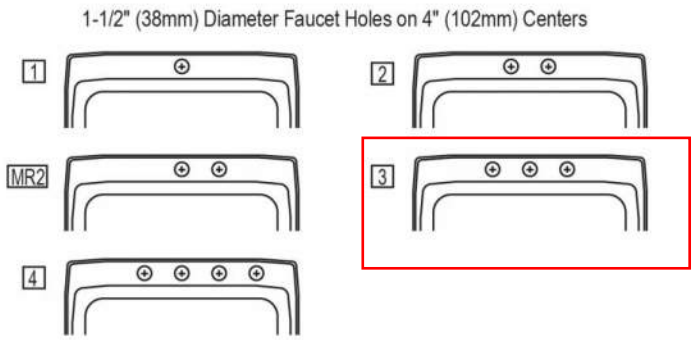

Installation Profile:

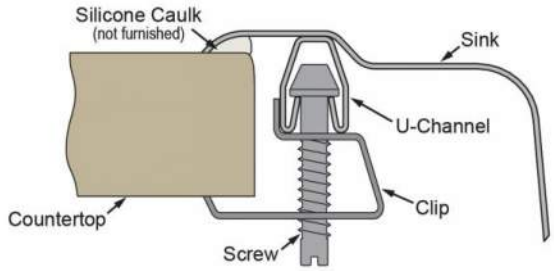

Optional Accessories		
LKWOBG2115SS	Elkay Stainless Steel 20" x 14-3/4" x 1" Bottom Grid Spec Sheet (PDF)	
CB1516	Elkay Hardwood 15" x 16-3/4" x 3/4" Cutting Board Spec Sheet (PDF)	
LK99	Elkay Deluxe 3-1/2" Drain Type 304 Stainless Steel Body Strainer Basket Rubber Seal and Tailpiece Spec Sheet (PDF)	
LKAD35	Elkay 3-1/2" Drain Fitting" Stainless Steel Body Strainer Basket and Offset Tailpiece Spec Sheet (PDF)	

In keeping with our policy of continuing product improvement, Elkay reserves the right to change product specifications without notice. Please visit elkay.com for the most current version of Elkay product specification sheets. This specification describes an Elkay product with design, quality, and functional benefits to the user. When making a comparison of other producers' offerings, be certain these features are not overlooked.

ELKAY®
SPECIFICATIONS

Elkay Deluxe 3-1/2" Drain Type 304 Stainless Steel Body Strainer Basket Rubber Seal and Tailpiece

Model(s) LK99

PRODUCT SPECIFICATIONS

Elkay Deluxe 3-1/2" Drain Type 304 Stainless Steel Body Strainer Basket Rubber Seal and Tailpiece. Overall dimensions are 4-7/16" x 4-7/16" x 7-9/16". Made of Stainless Steel.

Material:	Stainless Steel
Finish:	Chrome (CR)
Dimensions:	4-7/16" x 4-7/16" x 7-9/16"
Shipping Weight:	1 lbs.

Special Note: Replacement strainer basket 72002169: $19.00

- STAINLESS STEEL CONSTRUCTION: Made of strong, Type 304 stainless steel for long-lasting durability.
- 1-1/2" O.D. x 4" type 304 stainless steel tailpiece.

AMERICAN PRIDE. A LIFETIME TRADITION.
Like your family, the Elkay family has values and traditions that endure. For almost a century, Elkay has been a family-owned and operated company, providing thousands of jobs that support our families and communities.

Product Compliance: ASME A112.18.2/CSA B125.2

Clean and Care Manual (PDF)
Installation Instructions (PDF)

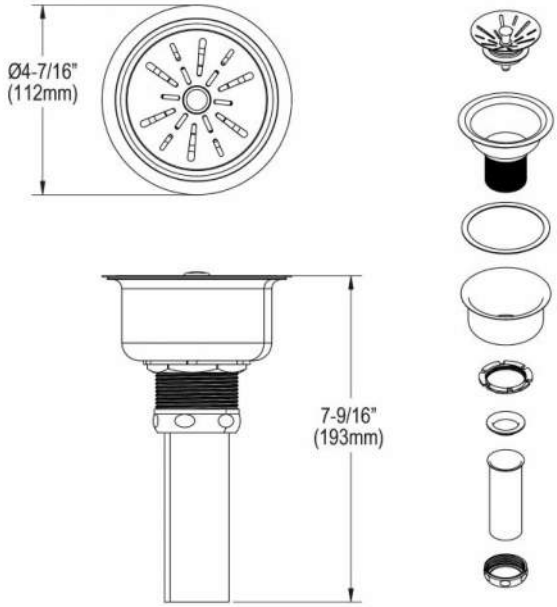

PART:_____QTY: _____

PROJECT:_____

CONTACT:_____

DATE:_____

NOTES:_____

APPROVAL:

In keeping with our policy of continuing product improvement, Elkay reserves the right to change product specifications without notice. Please visit elkay.com for the most current version of Elkay product specification sheets. This specification describes an Elkay product with design, quality, and functional benefits to the user. When making a comparison of other producers' offerings, be certain these features are not overlooked.

Manual Sink Faucets
786-E72-245ABCP

CHICAGO FAUCETS
Geberit Group

Product Type

Deck-mounted manual sink faucet with 8" centers

Features & Specifications

- 8" fixed centers
- 5-1/4" rigid/swing gooseneck spout
- Pressure compensating non-aerating laminar flow outlet 0.5 GPM
- Vandal Proof 4" wristblade handle
- Long stem Quaturn™ Control-A-Flo cartridge, left-hand
- Long stem Quaturn™ Control-A-Flo cartridge, right-hand
- ECAST® design provides durable cast brass construction with total lead content equal to or less than 0.25% by weighted average
- Complies with the requirements of the Buy American Act of 1933.

Performance Specification

- Rated Operating Pressure: 20-125 PSI
- Rated Operating Temperature: 40-140°F

Warranty

- 5-Year Limited Cartridge Warranty
- Lifetime Limited Faucet Warranty
- 1-Year Limited Finish Warranty

Codes & Standards

- ASME A112.18.1/CSA B125.1
- ADA ANSI/ICC A117.1
- NSF/ANSI 61, Section 9

Job Name _____

Item Number _____

Section/Tag _____

Model Specified _____

Architect _____

Engineer _____

Contractor _____

[ ] Submitted as Shown [ ] Submitted with Variations

Date _____

ECAST

ECAST products are intended for installation where state laws and local codes mandate lead content levels or in any location where lead content is a concern.

2100 South Clearwater Drive
Des Plaines, IL
P: 847/803-5000
F: 847/803-5454
Technical: 800/TEC-TRUE
www.chicagofaucets.com

786-E72-245ABCP

Architect/Engineer Specification

Chicago Faucets No. 786-E72-245ABCP, Sink Faucet for hot and cold water, concealed deck-mount with 8" fixed centers, chrome plated. Rigid/swing gooseneck spout, 5-1/4" center-to-center. 0.5 GPM (1.9 L/min) laminar flow non-aerating outlet. 4" metal, vandal-proof, wristblade handles with sixteen-point, tapered broach and secured blue and red index buttons. Quaturn™ rebuildable compression cartridge, opens and closes 90°, closes with water pressure, features square, tapered stem. 1/2" NPSM supply inlets and coupling nut for 3/8" or 1/2" flexible riser. ECAST® construction with less than 0.25% lead content by weighted average. This product meets ADA ANSI/ICC A117.1 requirements and is tested and certified to industry standards: ASME A112.18.1/CSA B125.1, and Certified to NSF/ANSI 61, Section 9 by CSA.

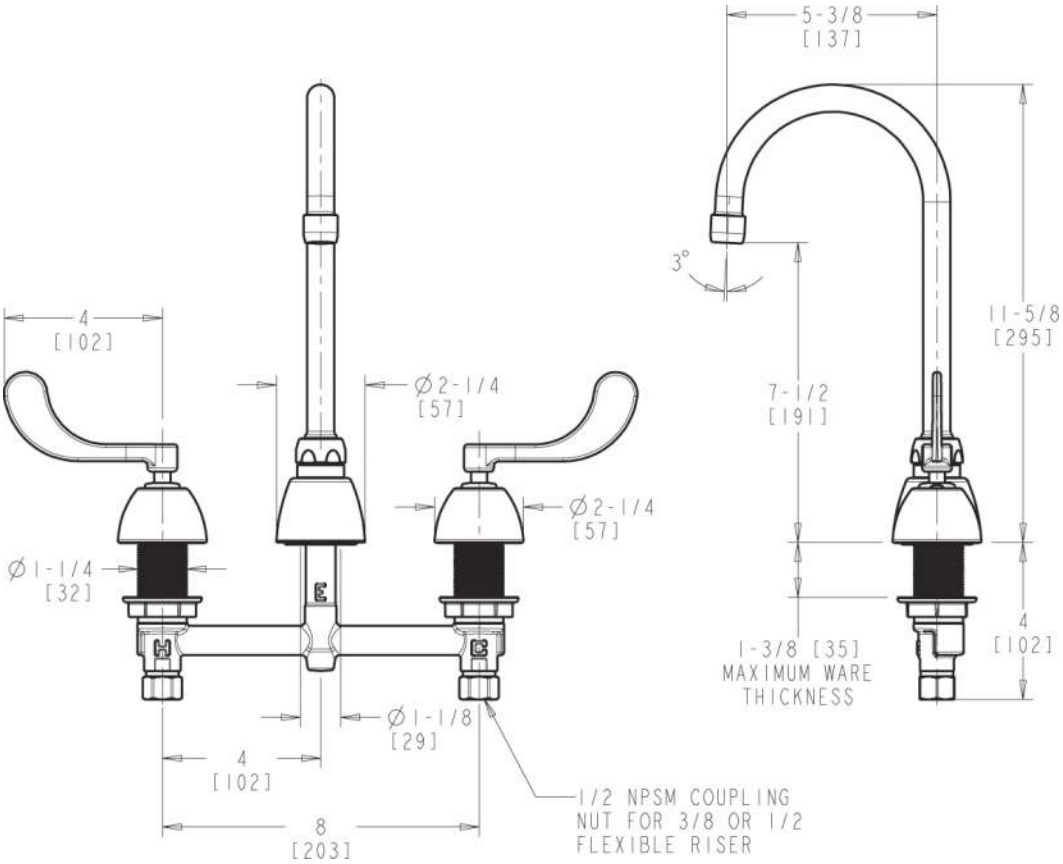

Operation and Maintenance

Installation should be in accordance with local plumbing codes. Flush all pipes thoroughly before installation. After installation, remove spout outlet or flow control and flush faucet thoroughly to clear any debris. Care should be taken when cleaning the product. Do not use abrasive cleaners, chemicals or solvents as they can result in surface damage. Use mild soap and warm water for cleaning and protecting the life of Chicago Faucet products. For specific operation and maintenance refer to the installation instructions and repair parts documents that are located at www.chicagofaucets.com.

Chicago Faucets, member of the Geberit Group, is the leading brand of commercial faucets and fittings in the United States, offering a complete range of products for schools, laboratories, hospitals, office buildings, food service, airports and sport facilities. Call 1.800.TECTRUE or 1.847.803.5000 Option 1 for installation or other technical assistance.

2100 South Clearwater Drive
Des Plaines, IL
P: 847/803-5000
F: 847/803-5454
Technical: 800/TEC-TRUE
www.chicagofaucets.com

Tub & Shower Fittings

SH-TP4-00-020

Product Type

Thermostatic/pressure balancing shower fitting with automatic drain and hand spray

Features & Specifications

- 1921-VONF thermostatic/pressure balancing tub and shower valve
- 2.5 GPM hand spray with pause control; two 34" stainless steel hoses with automatic hose drain
- Wall-mounted hand spray holder
- Integral service stops with checks to prevent cross flow
- Thermostatic/pressure balancing cartridge

Performance Specification

- Rated Operating Pressure: 40-125 PSI
- Rated Operating Temperature: 40-120°F

Warranty

- 5-Year Limited Faucet Warranty
- 5-Year Limited Cartridge Warranty
- 1-Year Limited Finish Warranty

Codes & Standards

- ADA ANSI/ICC A117.1
- ASSE 1014-2005
- Complies with ASSE 1016/ASME A112.1016/CSA B125.16
- NOTE: This fitting is not intended to be sold in California after January 1, 2016
- ASME A112.18.1/CSA B125.1

Job Name _____

Item Number _____

Section/Tag _____

Model Specified _____

Architect _____

Engineer _____

Contractor _____

[ ] Submitted as Shown [ ] Submitted with Variations

Date _____

2100 South Clearwater Drive
Des Plaines, IL
P: 847/803-5000
F: 847/803-5454
Technical: 800/TEC-TRUE
www.chicagofaucets.com

SH-TP4-00-020

Architect/Engineer Specification

Chicago Faucets No. SH-TP4-00-020, Shower System with Automatic Drain, thermostatic/pressure balancing valve, wall-mounted. Chrome plated. Includes wall elbow with in-line air vent, 2.5 GPM hand spray with pause control; two 34" stainless steel hoses with automatic hose drain, thermostatic/pressure balancing cartridge. 1/2" nominal copper and 1/2" NPT hot and cold supply inlets and outlets. Shower valve cycles from cold to hot. Wall plate includes embossed and color-coded temperature index. Integral service stops with checks to prevent cross-flow. This product meets ADA ANSI/ICC A117.1 requirements and is tested and certified to industry standards: ASME A112.18.1/CSA B125.1, ASSE 1014, and ASSE 1016.

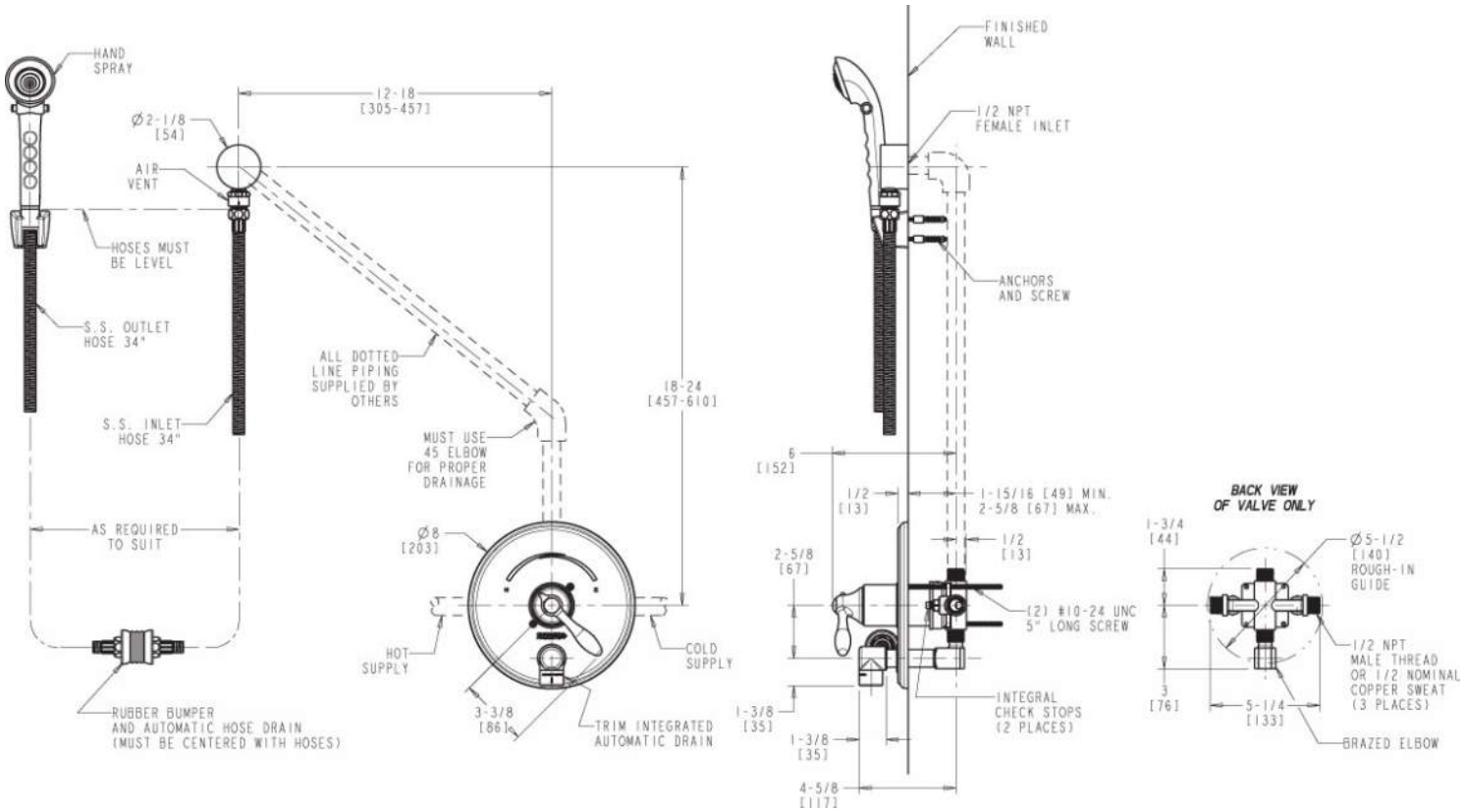

Operation and Maintenance

Installation should be in accordance with local plumbing codes. Flush all pipes thoroughly before installation. After installation, remove spout outlet or flow control and flush faucet thoroughly to clear any debris. Care should be taken when cleaning the product. Do not use abrasive cleaners, chemicals or solvents as they can result in surface damage. Use mild soap and warm water for cleaning and protecting the life of Chicago Faucet products. For specific operation and maintenance refer to the installation instructions and repair parts documents that are located at www.chicagofaucets.com.

Chicago Faucets, member of the Geberit Group, is the leading brand of commercial faucets and fittings in the United States, offering a complete range of products for schools, laboratories, hospitals, office buildings, food service, airports and sport facilities. Call 1.800.TECTRUE or 1.847.803.5000 Option 1 for installation or other technical assistance.

2100 South Clearwater Drive
Des Plaines, IL
P: 847/803-5000
F: 847/803-5454
Technical: 800/TEC-TRUE
www.chicagofaucets.com

Z415B

BODY ASSEMBY W/ "TYPE B" STRAINER

SPECIFICATION SHEET

TAG _____

Dimensional Data (inches and [mm]) are Subject to Manufacturing Tolerances and Change Without Notice

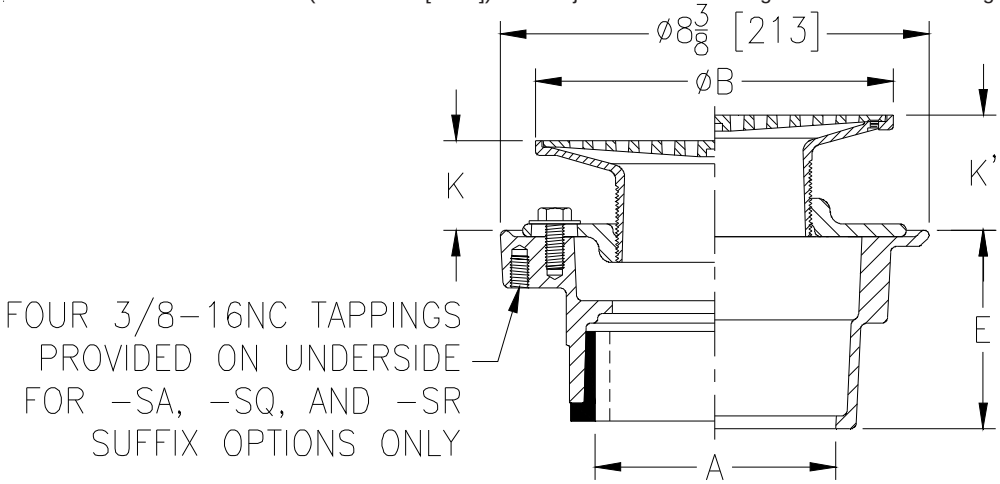

Dimensions in In [mm]						Approx. Wt. Lbs. [kg]	Strainer Open Area Sq. In. [cm²]
A Pipe Size	B Strainer Dia.	K		K'			
		Min.	Max.	Min.	Max.		
2,3 [51,76]	5 [127]	1 [25]	1-1/2 [38]	1-3/32 [28]	2-1/4 [57]	11 [5]	6-1/4 [40]
2,3,4 [51,76,102]	6 [152]	1 [25]	1-25/32 [45]	1-13/32 [36]	2-17/32 [64]	13 [6]	9 [58]
2,3,4 [51,76,102]	7 [178]	1 [25]	2-1/8 [54]	1-23/32 [44]	2-7/8 [73]	14 [6]	12 [77]
3,4 [76,102]	8 [203]	1-5/32 [30]	2-1/8 [54]	1-3/4 [44]	2-7/8 [73]	16 [7]	19 [123]
6 [152]	8 [203]	1-5/32 [30]	2-1/8 [54]	1-3/4 [44]	2-7/8 [73]	18 [8]	19 [123]
6 [152]	10 [254]	1-7/16 [37]	2-1/2 [64]	2 [51]	3-1/4 [83]	22 [10]	23 [148]

ENGINEERING SPECIFICATION: ZURN ZN415B
Floor and shower drain, Dura-Coated cast iron body with bottom outlet, combination invertible membrane clamp and adjustable collar with seepage slots and "TYPE B" polished nickel bronze, light-duty strainer.

OPTIONS (Check/specify appropriate options)

PIPE SIZE	(Specify size/type) **OUTLET**		**'E' BODY HT. DIM.**
2,3,4 [51,76,102]	_____ IC	Inside Caulk	4-3/16 [106]
2 [51]	_____ IP	Threaded	2-7/16 [62]
3 [76]	_____ IP	Threaded	2-3/4 [70]
4 [102]	_____ IP	Threaded	2-13/16 [71]
6 [152]	_____ IP	Threaded	2-7/8 [73]
2,3,4 [51,76,102]	_____ NH	No-Hub	3-13/16 [97]
2,3,4 [51,76,102]	_____ NL	Neo-Loc	3-7/8 [98]

PREFIXES

- [x] ZB D.C.C.I. Body Assembly w/ Polished Bronze Top
- [ ] ZN D.C.C.I. Body Assembly w/ Polished Nickel Bronze Top*

SUFFIXES

- [ ] -AR Acid Resisting Epoxy Coated Cast Iron
- [ ] -CP Chrome-Plated Bronze Top
- [ ] -G Galvanized Cast Iron
- [ ] -HD Heavy-Duty Slotted Grate (ZN 5,6 [127,152] Sizes Only)
- [ ] -OF Oval Funnel (Z329-7) (6,7,8,10 [152,178,203,254] Strainers Only)
- [ ] -P Trap Primer Connection (Specify 1/2 [13] or 3/4 [19])
- [ ] -PC Protective Cover
- [ ] -SA Stabilizer Assembly (See Z1035)
- [ ] -SQ Stabilizer Q-Deck (See Z1035-Q)
- [ ] -SR Stabilizer Ring
- [ ] -TC Neo-Loc Test Cap Gasket (2,3,4 [51,76,102] NL Outlet Only)
- [ ] -U 1-3 [25-76] High Extension Adapter
- [ ] -V Backwater Valve
- [x] -VP Vandal-Proof Secured Top
- [ ] -Y Sediment Bucket
- [ ] -4 4 [102] Diameter Funnel (Z328)
- [ ] -90 90° Threaded Side Outlet Body Assembly (2,3 [51,76] Only)

* Regularly furnished unless otherwise specified.

Zurn Industries, LLC | **Specification Drainage Operation**
1801 Pittsburgh Avenue, Erie, PA U.S.A. 16502 · Ph. 855-663-9876, Fax 814-454-7929

In Canada | **Zurn Industries Limited**
3544 Nashua Drive, Mississauga, Ontario L4V 1L2 · Ph. 905-405-8272, Fax 905-405-1292

www.zurn.com

Rev. T
Date: 09/26/17
C.N. No. 137856
Prod. | Dwg. No. Z415B

23-009 - Hines VA - CLC Bldg 217

FD-2 - DEMENTIA TOILET - LINEAR SHOWER DRAIN

ZS880

STAINLESS STEEL
LINEAR SHOWER DRAIN

SPECIFICATION SHEET

TAG _____

Dimensional data (inches and [mm]) are subject to manufacturing tolerances and change without notice.

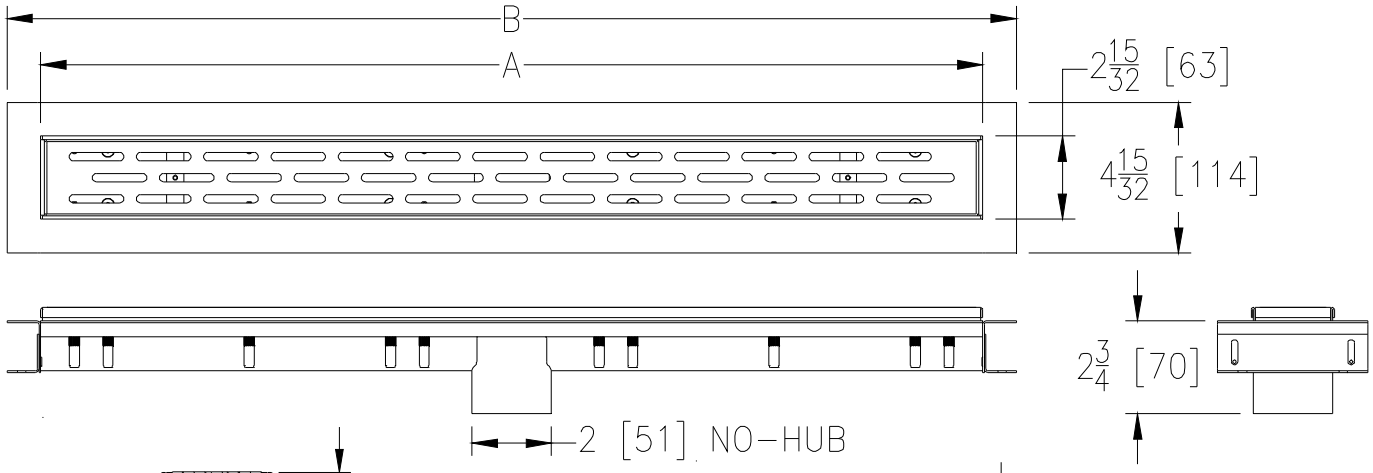

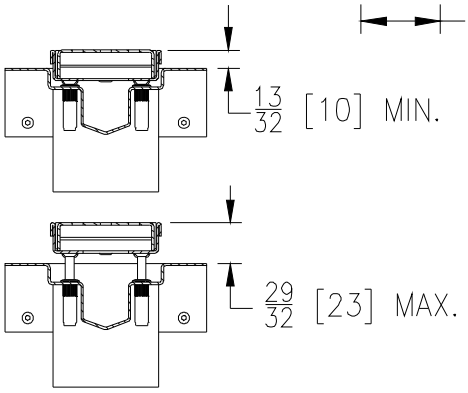

FRAME ADJUSTMENT RANGE

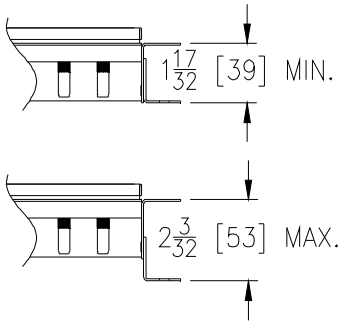

ANCHORING SUPPORT LEG
ADJUSTMENT RANGE

PAT. NO.
8,347,424

Dimensions In Inches [mm]			Approx. Wt. Lbs. [kg]	Grate Open Area Sq. In. [cm²]
Product Designation	A	B		
-12	12 [305]	14 [356]	2.9 [1.3]	6 [38]
-28	28 [711]	30 [762]	5.4 [2.5]	15 [97]
-32	32 [813]	34 [864]	5.9 [2.7]	18 [116]
-36	36 [914]	38 [965]	6.4 [2.9]	20 [129]
-40	40 [1016]	42 [1069]	7.2 [3.3]	22 [142]
-48	48 [1219]	50 [1270]	8.4 [3.8]	27 [174]
-60	60 [1524]	62 [1575]	10.3 [4.7]	34 [219]
-72	72 [1829]	74 [1880]	12.4 [5.6]	41 [265]

ENGINEERING SPECIFICATION: ZS880
All Type 304 (CF8) Fabricated Stainless Steel Linear Shower Drain. Complete with vertically adjustable anchoring support legs, anti-ponding V-shaped channel with 2" [51mm] No-Hub center outlet, adjustable secured leveling frame with built-in tile edge, integral membrane flange for glue on waterproofing membrane, and secured, light-duty, slotted heel-proof grate. Drain is designed for installation in a minimum 2" [51mm] concrete pour and can be adjusted to accommodate 1/4" [6mm] and 3/8" [10mm] finished tile thicknesses.

OPTIONS (Check/specify appropriate options)

PREFIXES

- ☒ ZS — All Type 304 (CF8) Stainless Steel*
- ____ ZR — All Type 304 (CF8) Stainless Steel w/ Oil-Rubbed Bronze Finish

GRATE OPTIONS

- ____ -BW — Basket Weave Grate
- ____ -DB — Decorative Block Grate
- ☒ -SG — Serenity Grate
- ____ -TG — Tile In-Lay Grate
- ____ -WG — Wave Grate

SUFFIXES

- ____ -2 — Two Bottom Outlets (2 [51] No-Hub, Not Available on Size -12)
- ____ -2IP — 2 [51] Female IP Threaded Outlet
- ____ -3 — Three Bottom Outlets (2 [51] No-Hub, Not Available on Size -12)
- ____ -EO — End Bottom Outlet (2 [51] No-Hub, Not Available on Size -12)
- ____ -FS — Outlet Filter Screen
- ____ -KC — Clamp Collar on Anchor Flange
- ____ -LB — Lower Body With Membrane Clamp Collar
- ____ -SO — Side Outlet (2 [51] No-Hub), Not available with -LB Option

* Regulary furnished unless otherwise specified

Zurn Industries, LLC | Specification Drainage Operation
1801 Pittsburgh Avenue, Erie, PA U.S.A. 16502 · Ph. 855-663-9876, Fax 814-454-7929
In Canada | **Zurn Industries Limited**
3544 Nashua Drive, Mississauga, Ontario L4V 1L2 · Ph. 905-405-8272, Fax 905-405-1292
www.zurn.com

Rev. G
Date: 01/02/19
C.N. No. 140951
Prod. | Dwg. No. ZS880

Accessories & Parts
131-CABNF

Product Type

Thermostatic mixing valve for single or multiple faucet installations

Features & Specifications

- Adjustment cap with locking feature
- Brass body construction with corrosion-resistant internal components, includes plastic wall bracket
- Standard 3/8" compression inlets and outlets
- 3/8" compression tee inlet connection for cold water bypass feature, 3/8" compression angle outlet connection for convenient hot water hook-up
- Integral inlet check valves to protect against cross-flow
- ECAST® design provides durable cast brass construction with total lead content equal to or less than 0.25% by weighted average
- Complies with the requirements of the Buy American Act of 1933.

Warranty

- 1-Year Limited Cartridge Warranty
- Lifetime Limited Faucet Warranty
- 1-Year Limited Finish Warranty
- 1-Year Limited Material Warranty

Codes & Standards

- ASSE 1070/ASME A112.1070/CSA B125.70
- NSF/ANSI 372 Low Lead Content
- NSF/ANSI 61, Section 9

Job Name _____

Item Number _____

Section/Tag _____

Model Specified _____

Architect _____

Engineer _____

Contractor _____

[ ] Submitted as Shown [ ] Submitted with Variations

Date _____

ECAST

ECAST products are intended for installation where state laws and local codes mandate lead content levels or in any location where lead content is a concern.

2100 South Clearwater Drive
Des Plaines, IL
P: 847/803-5000
F: 847/803-5454
Technical: 800/TEC-TRUE
www.chicagofaucets.com

131-CABNF

Architect/Engineer Specification

Chicago Faucets No. 131-CABNF, ECAST® Thermostatic Mixing Valve. Standard 3/8 compression inlets and outlets. Integral inlet check valves to protect against cross-flow. Adjustment cap with locking feature. Brass body construction, includes wall bracket. Corrosion resistant internal components. Thermostatic wax element design. Thermostat controls both hot and cold water. Installs between the stop valves and the faucet for single or multiple faucet installations. Minimum supply pressure: 30psi (207 kPa); Hot inlet temperature: 120°F to 180°F (49°C to 82°C). Outlet water temperature will be less than hot water inlet temperature. Includes wall bracket. Minimum flow rate: 0.35 gpm (@ min. 20 psi). Maximum flow rate: 4.6 gpm (@ min. 125 psi). Temperature out: 80°F to 120°F (27°C to 49°C). 3/8 compression tee inlet connection for cold water bypass feature. 3/8 compression angle outlet connection for convenient hot water hook-up. ECAST® construction with less than 0.25% lead content by weighted average.

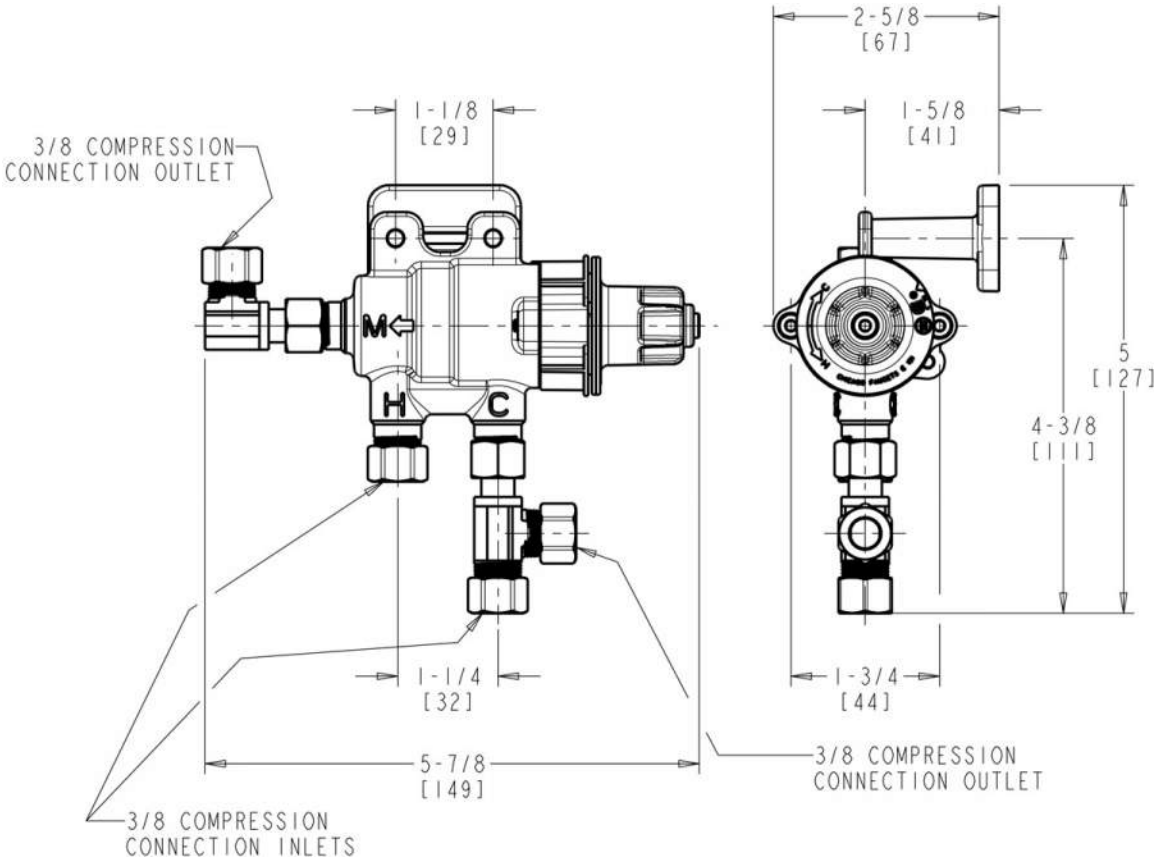

Operation and Maintenance

Installation should be in accordance with local plumbing codes. Flush all pipes thoroughly before installation. After installation, remove spout outlet or flow control and flush faucet thoroughly to clear any debris. Care should be taken when cleaning the product. Do not use abrasive cleaners, chemicals or solvents as they can result in surface damage. Use mild soap and warm water for cleaning and protecting the life of Chicago Faucet products. For specific operation and maintenance refer to the installation instructions and repair parts documents that are located at www.chicagofaucets.com.

Chicago Faucets, member of the Geberit Group, is the leading brand of commercial faucets and fittings in the United States, offering a complete range of products for schools, laboratories, hospitals, office buildings, food service, airports and sport facilities. Call 1.800.TECTRUE or 1.847.803.5000 Option 1 for installation or other technical assistance.

2100 South Clearwater Drive
Des Plaines, IL
P: 847/803-5000
F: 847/803-5454
Technical: 800/TEC-TRUE
www.chicagofaucets.com

23-009 - Hines VA - CLC Bldg 217

LAV-4 - Bariatric rooms Bariatric lavatory wall mounted with programmable sensor battery faucet

Location: _____

MIFAB®

FS1910-FL

12" X 12" X 4" STAINLESS STEEL FLOOR AREA & INDIRECT SANITARY WASTE DRAIN WITH FLANGE

Specification: MIFAB Series FS1910-FL, 12" x 12" x 4" deep 16 gauge, All Type 304 (CF8) stainless steel sanitary floor area and indirect waste drain complete with cast stainless steel secured rim and grate with allen key vandal proof stainless steel screws, stainless steel anchor flange with weepholes and anti-splash dome strainer.

Function: Used in kitchens, restaurants, breweries, dairies, creameries, food processing locations, nuclear, gas and coal fired power stations, chemical plants, laboratories and other areas where the corrosion resistance of Type 304 stainless steel is required for superior sanitation. The anchor flange is designed to receive water proofing membrane. A membrane clamp (Suffix -C) is recommended to secure the water proofing membrane to the anchor flange.

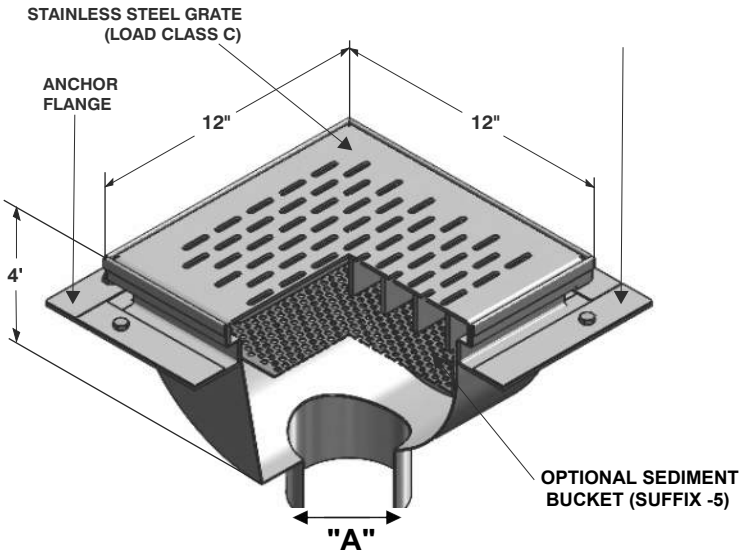

	Suffix	"A"
○	FS1912-FL	2"
○	FS1913-FL	3"
☒	FS1914-FL	4"

FLOOR SINK STANDARD FUNNEL OPTIONAL VARIATIONS

	Suffix	Description
☐	-F4	4" round funnel
☐	-F6	6" round funnel
☐	-G	4" x 9" oval funnel
☐	-J	3" x 1" oval funnel
☐	-21	Secondary flat strainer (FD-9600 Series)

FLOOR SINK STANDARD OPTIONAL VARIATIONS

	Suffix	Description
☒	-5	Sediment bucket (FS1700-PB-3)
☒	-6	Security screws (H-1039A, 4 pcs) (-1, -3 only)
☐	-7	Trap seal primer connection
☐	-8	Backwater Valve (BV1250 Series) (2", 3", 4")
☐	-21	Secondary flat strainer (FD-9600 Series)
☐	-22	Less grate
☐	-32	Deep seal trap (2", 3", 4" no hub) (MI-950 Series)
☐	-51	2 ½" round center grate opening
☐	-83	Stainless steel mesh screen over sediment bucket (add to S.S. Bucket)
☐	-150	Half grate
☐	-175	¾" grate
☒	-C	Membrane clamp
☐	-Z	Extended wide flange on body (20" x 20" x ¼" thick)

CALIFORNIA PROPOSITION 65 WARNING. This product contains chemicals known to the State of California to cause cancer and birth defects or other reproductive harm.

Job Name: _____ Page No: _____

Section No: _____ Contractor: _____

Schedule No: _____ Purchase Order No: _____

MIFAB® *reserves the right to make changes in material and design without formal notice and obligation.*

USA: 1-800-465-2736 www.mifab.com CAN: 1-800-387-3880

ZURN®

Z1441

WALL CLEANOUT W/ SMOOTH ACCESS COVER

SPECIFICATION SHEET

TAG _____

Dimensional Data (inches and [mm]) are Subject to Manufacturing Tolerances and Change Without Notice

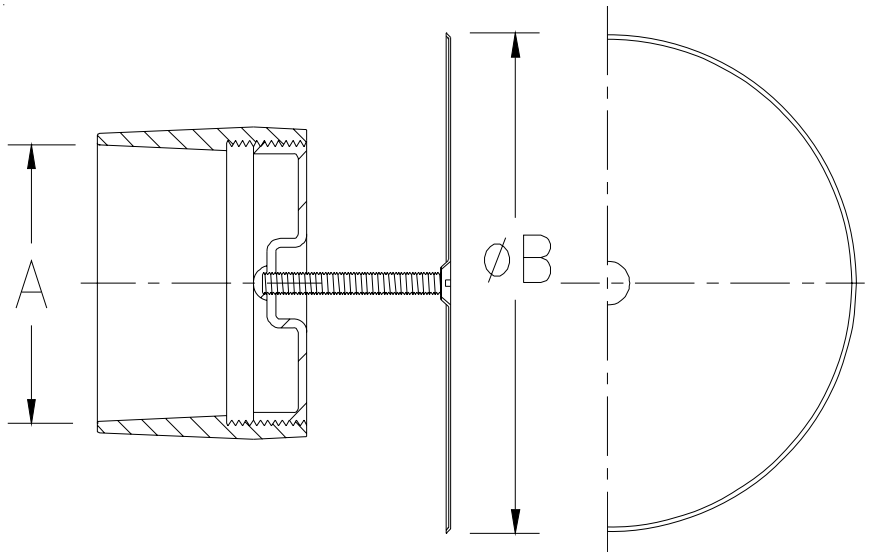

Dimensions In Inches		Approx. Wt. Lbs. [kg]
A-Pipe Size	B	
2 [51]	5 [127]	4 [2]
3 [76]	5 [127]	5 [2]
4 [102]	7 [178]	7 [3]
5 [127]	7 [178]	8 [4]
6 [152]	9 [229]	9 [4]
8 [203]	11 [279]	12 [5]

ENGINEERING SPECIFICATION: ZURN Z1441
Wall Cleanout, Dura-Coated cast iron body, gas and watertight ABS tapered thread plug, and round, smooth stainless steel access cover with securing screw.

OPTIONS (Check/specify appropriate options)

PIPE SIZE

2 thru 6-8 [51 thru 152-203]

(Specify size) **OUTLET**

____ NH No-Hub

PREFIXES

- [x] Z Dura-Coated Cast Iron Body with Stainless Steel Cover*
- [ ] ZB D.C.C.I. Body with Polished Bronze Cover

SUFFIXES

- [ ] -A Raised Head Plug
- [ ] -BP Bronze Plug
- [ ] -G Galvanized Cast Iron
- [ ] -SL Screw Longer Than 3-1/2 [89]
- [x] -VP Vandal-Proof Secured Top

*REGULARLY FURNISHED UNLESS OTHERWISE SPECIFIED

REV. D	DATE: 11/03/10	C.N. NO. 120232
DWG. NO. 58763		PRODUCT NO. Z1441

Z1400-BZ1

FLOOR CLEANOUT WITH "TYPE B" COVER AND EZ1™ TECHNOLOGY

SPECIFICATION SHEET

TAG _____

Design and Dimensional Data (inches and [mm]) are Subject to Manufacturing Tolerances and Change Without Notice

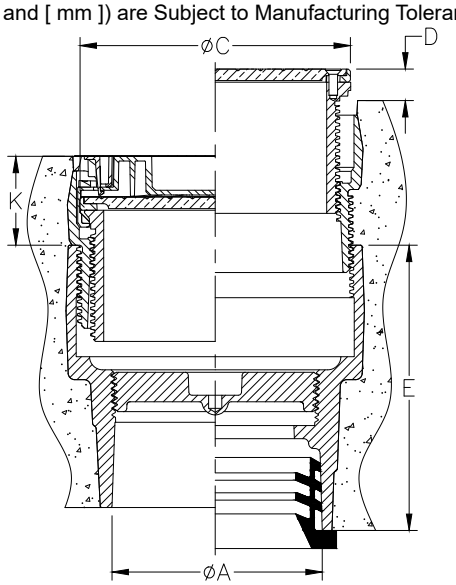

Dimensions In Inches [mm]							Approx. Wt. Lbs. [kg]
A Pipe Size	Cover Designation	C	D Min.	D Max	K Min.	K Max	
2 [51]	-5B	5-5/32 [131]	0	1 [25]	1-23/32 [44]	2-15/16 [75]	10 [5]
3-4 [76-102]		5-5/32 [131]	0	1 [25]	1-23/32 [44]	2-15/16 [75]	12 [5]
2 [51]	-6B	6-8/32 [156]	0	31/32 [25]	1-11/16 [43]	2-27/32 [72]	11 [5]
3-4 [76-102]		6-8/32 [156]	0	31/32 [25]	1-11/16 [43]	2-27/32 [72]	13 [6]
6 [152]	-8B	7-7/8 [200]	0	1 [25]	1-7/8 [48]	3-1/32 [77]	19 [9]

ENGINEERING SPECIFICATION: ZURN Z1400-BZ1 cleanout, Dura-Coated cast iron body with bottom outlet, with gas and water tight threaded ABS tapered plug, and top assembly. EZ1™ drainage series is engineered to simplify product installation and comprised of concrete shield to provide up to 1" [25] of vertical post pour adjustment, pre-packaged shims for tilt correction, and integrated, self contained "Type B" light duty scoriated cover with rough-in cover for protection during concrete pour. Cleanout is designed in accordance with ASME A112.36.2M.

OPTIONS (Check/specify appropriate options)

PIPE SIZE	(Specify size/type) OUTLET	'E' BODY HT.DIM.
2-3 [51-76]	____-NH No-Hub	4-3/4 [121]
4 [102]	____-NH No-Hub	5 [127]
6 [152]	____-NH No-Hub	5-1/2 [140]
2-4 [51-102]	____-NL Neo-Loc	4-3/4 [121]
3 [76]	____-NL Neo-Loc	5-7/16[138]
6 [152]	____-NL Neo-Loc	5-1/2 [140]

PREFIXES

- ☒ ZB D.C.C.I. w/ Polished Bronze Top
- ____ ZN D.C.C.I. w/ Polished Nickel Bronze Top*
- ____ ZS D.C.C.I. w/ Polished Stainless Steel Top

SUFFIXES

- ____ -AR Acid Resisting Epoxy Coated Finish
- ____ -BP Bronze Plug (Not Available for 3 [76] Neo-Loc Outlet)
- ____ -G Galvanized Cast Iron
- ____ -TC Neo-Loc Test Cap Gasket (2-3-4 [51-76-102] NL Bottom Outlet Only)
- ____ -UP 1-3/4 [44] Pre-Pour Adjustment Extension Adapter
- ☒ -VP Vandal-Proof Screws

* Regularly furnished unless otherwise specified

⚠ **WARNING:** Cancer and Reproductive Harm - www.P65Warnings.ca.gov

⚠ **ADVERTENCIA:** Cáncer y daño reproductivo - www.P65Warnings.ca.gov

⚠ **AVERTISSEMENT:** Cancer et effets néfastes sur la reproduction - www.P65Warnings.ca.gov

Zurn Industries, LLC | Specification Drainage Operation
1801 Pittsburgh Avenue, Erie, PA 16502, Ph. 855.663.9876

In Canada | Zurn Industries Limited
7900 Goreway Drive, Unit 10, Brampton, Ontario L6T 5W6, Ph. 877.892.5216

www.zurn.com

Rev. D
Date: 01/02/23
C.N. No. 144898
Patent zurn.com/patents
Prod. | Dwg. No. Z1400-BZ1

M-500-NPB PRESSURE DROP ACTIVATED TRAP SEAL PRIMER

3 P.S.I PRESSURE DROP
Only a three p.s.i. line pressure drop is required to activate the primer, compared to five or ten p.s.i. by others. Lower water voume fixtures and faucets has resulted in lower line pressure drops. A three p.s.i. performance point ensures reliable water delivery to maintain the trap seal.

NO PRECHARGE
MIFAB's trap seal primers can be disassembled in the field for easy cleaning and repair, without risk of losing a precharge.

VIEW HOLES
Four view holes permit easy inspection of water delivery. The holes are across from each other, enabling light at the opposite end to illuminate the performance of the primer.

Note: See pages 20 and 21 for CSA and IAPMO approval certificates.

SEDIMENT FILTER
A replacement stainless steel sediment filter prevents line debris from entering the primer. This can be replaced after wear and build up of debris to ensure maximum life and performance of the primer.

NO ADJUSTMENTS
The replaceable and repairable cartridge tubes inside of the body are factory engineered to deliver enough water to service three, six or ten floor drain traps without adjustment. This eliminates confusion during field installation.

MIFAB MR-500-NPB, M1-500-NPB & M2-500-NPB SERIES pressure drop activated brass trap seal primer, with inlet opening of 1/2" M.I.P. and outlet opening of 1/2" F.I.P. Complete with four view holes and removable stainless steel filter screen. Requires no adjustments and no air pre-charge.MIFAB'S Series of pressure activated trap seal primers (MR-500-NPB, M1-500-NPB and M2-500-NPB) can be connected to any cold water line, and will activate when a valve or faucet is opened, resulting in at least a 3 p.s.i. pressure drop. **A pressure drop of three p.s.i. will activate all of the trap seal primers.** MIFAB's Series of trap seal primers can be disassembled in the field. Their unique design permits filter replacement without affecting the performance of the primer. The "O" ring seals are tested for reliability at a temperature range of -40 degrees to 450 degrees F. The M-500 Series of trap seal primers do not require adjustment. The operating range for all of MIFAB's Series of trap seal primers is 20 - 80 p.s.i.

All three models are listed with I.A.P.M.O. and C.S.A. (File #110892_0_000) and are tested and certified to the A.S.S.E. Standard 1018 and are so marked. U.S. Patent # 6,152,164

M-500 SERIES						
MODEL	LIST PRICE	A	B	PIPE FLATS	DRAINS SERVED	WATER OUTPUT
MR-500-NPB	**$75.00**	4-1/8"	1-1/4"	1-1/8"	6	1/2 oz.
M1-500-NPB	**$80.00**	4-1/8"	1-1/4"	1-1/8"	10	1 oz.
M2-500-NPB	**$77.50**	4-1/8"	1-1/4"	1-1/8"	3	1/4 oz.

M-500 OPTIONAL VARIATIONS							
MODEL NUMBER	DESCRIPTION	SHIP WEIGHT	CARTON QTY.	CARTON WEIGHT	LEAD FREE MATERIAL (-NPB)	REPLACEMENT FILTER SCREEN (-RF)	REPLACEMENT CARTRIDGE (-RC)
MR-500-NPB	Up to 6 drains	.75 lbs.	25	18.35 lbs.	No Add	**$37.00**	**$47.25 (green cartridge)**
M1-500-NPB	Up to 10 drains	.75 lbs.	25	18.35 lbs.	No Add	**$37.00**	**$53.50 (black cartridge)**
M2-500-NPB	Up to 3 drains	.75 lbs.	25	18.35 lbs.	No Add	**$37.00**	**$50.50 (red cartridge)**
M-500-UN						**$37.00**	**$53.50**

Note: See page 24 for installation, operation and maintenance instructions.

M-500-UN

For optional Union Connection use suffix (-UN). Read description below.

The union connection (Model # M-500-UN) permits easy access to the top of the trap seal primer for cleaning and maintenance. Simply solder the pipe to the top of the union nut. Screw the union nut onto the top of the MR-500-NPB, M1-500-NPB or M2-500-NPB trap seal primer during installation. When cleaning or maintenance of the trap seal primer is required. one can easily unscrew the union nut to access the trap seal primer and not have to cut the water supply pipe to access the trap seal primer.

Mechanical Products

VA HINES, IL

RENOVATE SPACES Building 217

BAE Project # 23-009

STATION PROJECT # 578-20-002

CONTRACT # 36C25223C0071

Location: VA Hines
State: Illinois
Date: May 08, 2024

(60% Construction Drawings)

BANCROFT ARCHITECTS + ENGINEERS

Air Handling Unit

Air Handling Unit Performance Report

Job Summary

Project Name:	Hines		
Unit Tag(s):	AHU-2 50-OA		
Quantity:	1	**Environment:**	Outdoor

Unit Overview

Model	Airflow (CFM)	Altitude (ft)	Weight (lbs)
XTO-48x63	7,000	0	5,802

Segment Sequence

(DP FS HM HC CC XA RF EE FR IP)

Unit Construction

Casing Details

Segment(s)	Thickness (in)	Exterior Paint	Exterior Gauge and Material	Interior Gauge and Material	Insulation Thickness and Material	Mylar Lining	Thermal Break	Bulkhead Material
IP, XA, HM, DP	2"	Champagne Urethane 3,500 Hr	Standard Ga. G-90 Galvanized	Standard Ga. G-90 Galvanized	2" Foam	-	-	None
FR, EE, RF, CC, HC, FS	2"	Champagne Urethane 3,500 Hr	Standard Ga. G-90 Galvanized	Standard Ga. G-90 Galvanized	2" Foam	-	-	Galvanized Steel

Base Details

Segment(s)	Material	Paint
IP, FR, EE, RF, XA, CC, HC, HM, FS, DP	6" Formed Steel	Champagne Urethane 3,500 Hr

Floor Details

Segment(s)	Gauge and Material	Paint	Insulation	Thermal Break	Attachment	Sub-Floor Gauge and Material
IP, FR, EE, RF, XA, CC, HC, HM, FS, DP	Standard Ga. G-90 Galvanized	None	2"	-	Screw Down	None

Notes

A curb rest will be provided with the unit.

Unit Electrical

Circuit Details

Circuit #	Component(s)	V/Ph/Hz	Full Load Amps (FLA)	Minimum Current Ampacity (MCA)	Maximum Overcurrent Protection (MOP)
1	VFD on FS	460/3/60	18	22.5	40
2	VFD on FR	460/3/60	9.6	12	20
3	Electrical Outlet and Light Switch on FS	120/1/60	-	-	15

Electrical Details

Minimum Unit SCCR	100 kA rms Symmetrical	**ETL Label (UL1995/NEC-2002)**	Yes

Unit Light Type	Light Switch Enclosure
LED	Outdoor

Supply Fan(s)

Performance Details

Fan Manufacturer	Model	# Blades	Class	Size	% Wheel Width	% Wheel Diameter	Quantity	Airflow per Fan (CFM)	Altitude (ft)	TSP (in w.g)	ESP (in w.g)	Fan Speed (RPM)	Fan Power (BHP)
Lau	DDPG2	9	II	200	100	100	1	7,000	0	7.50	3.00	2,634	11.78

Max RPM	Wheel Type	Blade Type	Wheel Material	Base Material	Fan Flow Isolation	AirFlow Monitoring	Inverter Drive Balancing	Isolation Type	Thrust Restraints
2,771	SWSI	Airfoil	Aluminum	Galvanized Steel	None	Yes (K=2136.00)	-	2" Spring	Yes

Drive Type	FEI	FEP (KW)	Inlet Screen	Fan Cage	Fan Stand	Motor Removal Rail	Seismic Snubber
Direct Drive	1.30	9.78	-	-	-	-	-

Motor Details

Type / MFG	Motor Power (HP)	V/Ph/Hz	Quantity	Insulation Class	RPM	Frame Size	FLA (Amps)	Efficiency	Location	SGR
ODP / Baldor	15.0	460/3/60	1	H	1,800	254T	18.00	Premium	Left	Yes

At Motor Synchronous Details

TSP (in w.g.)	Total Air Flow (CFM)	Fan Speed (RPM)	Fan Power (BHP)
3.37	4,691	1,765	3.54

Notes

Certified by the AHRI Central Station Air-Handling Unit (AHU) Certification Program, based on AHRI Standard 430/431. AHRI certified units are subject to rigorous and continuous testing, have performance ratings independently measured and are third-party verified. Certified units may be found in the AHRI Directory at www.ahridirectory.org

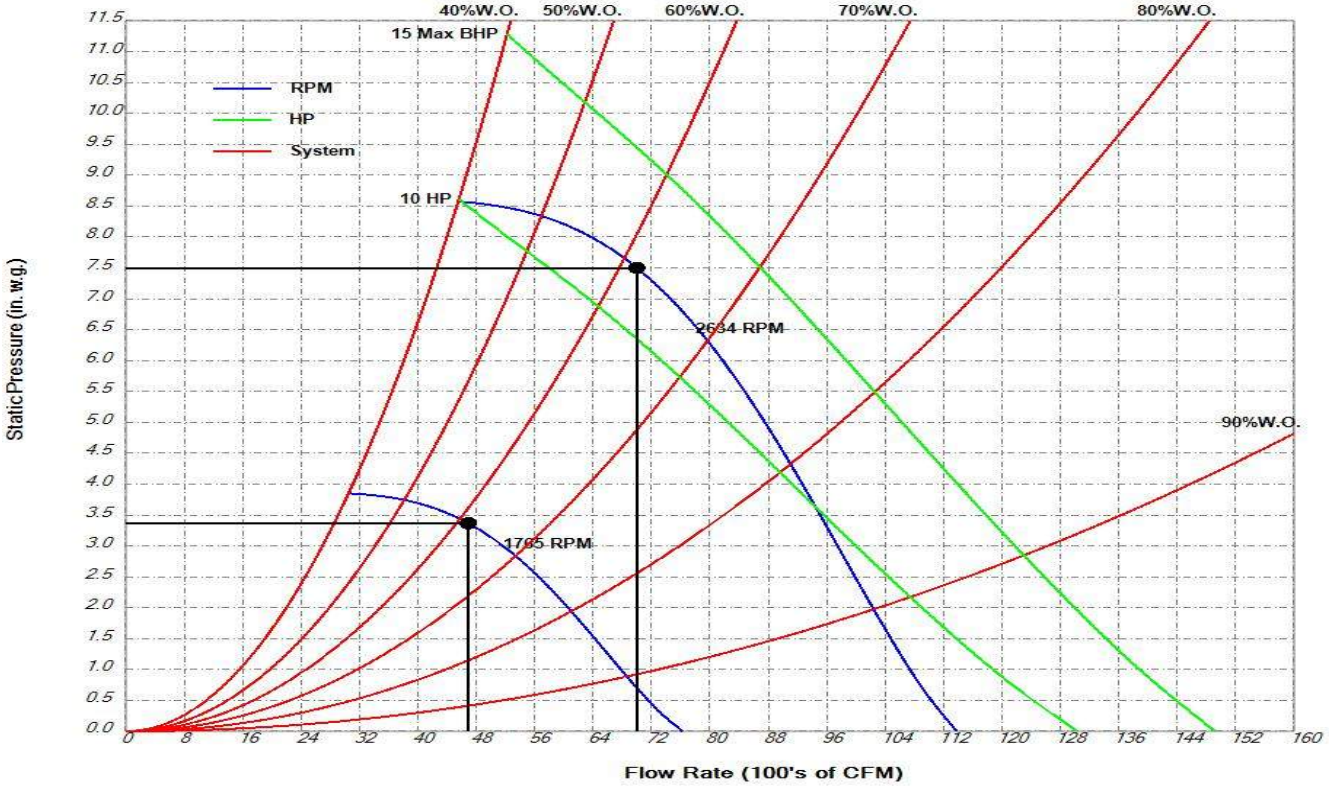

Return Fan(s)

Performance Details													
Fan Manufacturer	Model	# Blades	Class	Size	% Wheel Width	% Wheel Diameter	Quantity	Airflow per Fan (CFM)	Altitude (ft)	TSP (in w.g)	ESP (in w.g)	Fan Speed (RPM)	Fan Power (BHP)
Lau	DDPG2	9	II	182	100	100	1	7,000	0	2.73	1.50	2,551	5.69

Max RPM	Wheel Type	Blade Type	Wheel Material	Base Material	Fan Flow Isolation	AirFlow Monitoring	Inverter Drive Balancing	Isolation Type	Thrust Restraints
2,979	SWSI	Airfoil	Aluminum	Galvanized Steel	None	Yes (K=1688.00)	-	2" Spring	-

Drive Type	FEI	FEP (KW)	Inlet Screen	Fan Cage	Fan Stand	Motor Removal Rail	Seismic Snubber
Direct Drive	1.06	4.88	-	-	-	-	-

Motor Details										
Type / MFG	Motor Power (HP)	V/Ph/Hz	Quantity	Insulation Class	RPM	Frame Size	FLA (Amps)	Efficiency	Location	SGR
ODP / Baldor	7.5	460/3/60	1	H	1,800	213T	9.60	Premium	Left	Yes

At Motor Synchronous Details			
TSP (in w.g.)	Total Air Flow (CFM)	Fan Speed (RPM)	Fan Power (BHP)
1.31	4,857	1,770	1.90

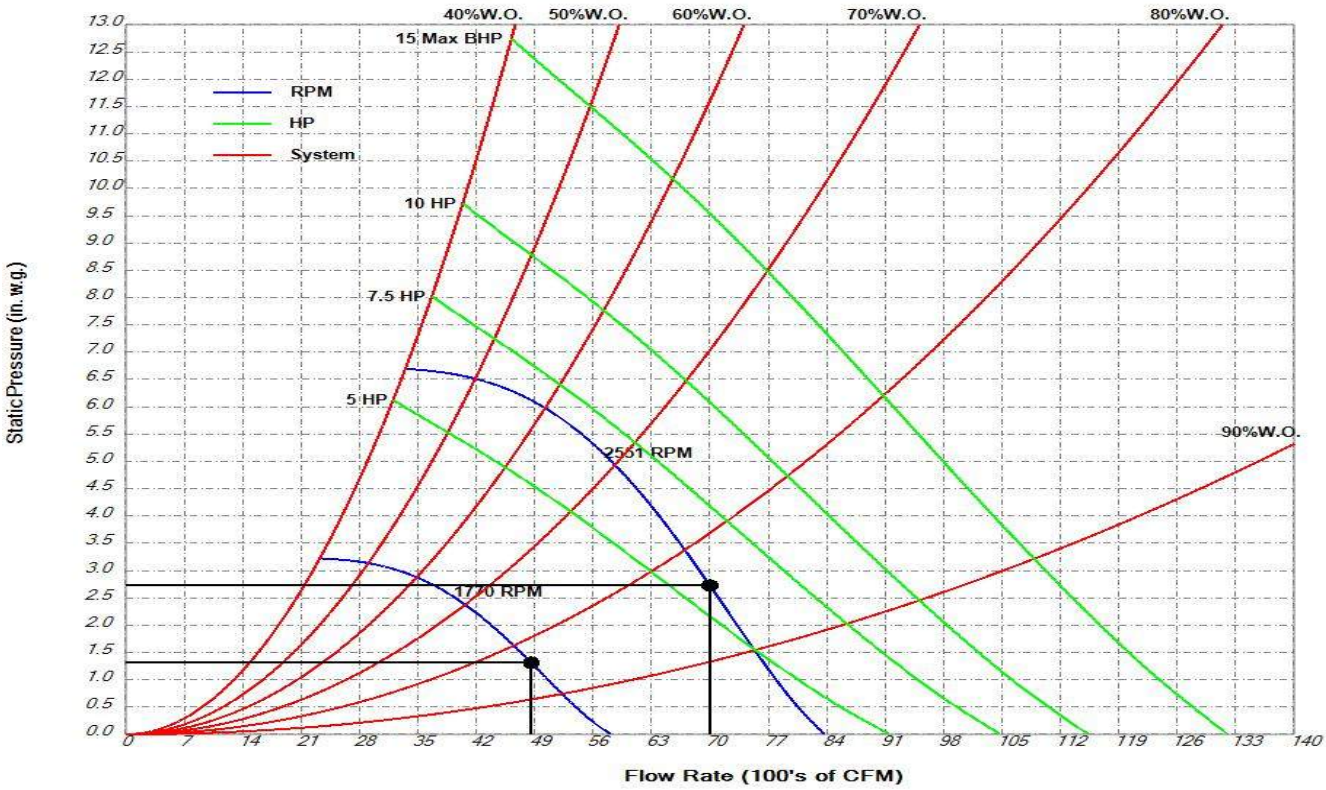

Glycol Coil(s)

Coil Information								
Segment[Index]	Coil Tag	Coil Duty	Fluid Type	Glycol Percentage	Airflow (cfm)	Flow Direction	Density	Altitude (ft)
CC[1]	-	Cooling	Propylene Glycol	30	7000	Horizontal	Standard	0

Coil Bank Configuration										
Segment[Index]	Tube Diameter (in) Fin Type	Total Fin Height (in)	Fin Length per Coil (in)	Face Velocity (fpm)	Stacking Rack Material	Coils High	Coils Wide	Coil Configuration	Coil Stagger (in)	Coil Pull Panel
CC[1]	0.500 Corrugated	37.50	51.00	527	-	1	1	Standard	0	Left Side

32 tons

Airside Performance							
Segment[Index]	EAT-DB (°F)	EAT-WB (°F)	LAT-DB (°F)	LAT-WB (°F)	TMBH	SMBH	Air Pressure Drop (in w.g.)
CC[1]	83.0	70.0	52.8	52.6	384	236	1.47

Fluidside Performance								
Segment[Index]	EFT (°F)	LFT (°F)	Fluid Velocity (fps)	Fluid Flow (gpm)	Fluid Pressure Drop (ft)	Rows	Tubes Per Circuit	Reynolds Number
CC[1]	44.0	54.0	4.6	80.6	20.3	10	10	4322

Fin and Tube Configuration							
Segment[Index]	Fin Thickness (in) / Material	Fin Spacing (fpi)	Tube Thickness (in)	Return Bend Thickness	Casing Material	Coil Coating	Fouling Factor (hr.ft².°F/BTU)
CC[1]	0.006 Aluminum	12	0.016	0.016	Galvanized	None	-

Header and Connection Configuration						
Segment[Index]	Header Material	Connection Material	Connection Diameter (in)	Connection Offset (in)	Connection Type	Connection Location/Rotation
CC[1]	Copper	Steel	2.5	0	MPT	Left

Other Performance			
Segment[Index]	Dry Weight (lbs)	Fluid Weight (lbs)	Internal Volume (ft³)
CC[1]	368	115	2.0

Notes

- Performance is shown for the entire coil bank. Performance is not per coil.
- Coil index indicates position in segment. Example: CC-1, index 1; Spacer, index 2; CC-1, index 3
- Ratings are for coils manufactured by Johnson Controls, Inc., 507 E. Michigan St., Milwaukee WI 53202.
- All Coils: AHRI Certified: Yes. Certified in accordance with the AHRI Forced-Circulation Air-Cooling and Air-Heating Coils Certification Program which is based on AHRI Standard 410 within the range of Standard rating conditions listed in Table 1 of the Standard. Certified units may be found in the AHRI Directory at www.ahridirectory.org.
- All Coils: BDW Tube Spacing: 1.25 x 1.08
- All Coils: Coil Dll Version: 8.6

Steam Coil(s)

Coil Information							
Segment[Index]	Coil Tag	Coil Duty	Fluid Type	Airflow (cfm)	Flow Direction	Density	Altitude (ft)
HC[1]	-	Heating	Distributed Steam	7000	Horizontal	Standard	0

Coil Bank Configuration										
Segment[Index]	Tube Diameter (in) Fin Type	Total Fin Height (in)	Fin Length per Coil (in)	Face Velocity (fpm)	Stacking Rack Material	Coils High	Coils Wide	Coil Configuration	Coil Stagger (in)	Coil Pull Panel
HC[1]	1.000 Steam	33.00	50.00	611	-	1	1	Standard	0	Left Side

Airside Performance				
Segment[Index]	EAT-DB (°F)	LAT-DB (°F)	SMBH	Air Pressure Drop (in w.g.)
HC[1]	38.0	101.6	481	0.11

Fluidside Performance			
Segment[Index]	Rows	Steam Pressure (psi)	Condensate (lbs/hr)
HC[1]	1.0	15.0	500

Fin and Tube Configuration					
Segment[Index]	Fin Thickness (in) / Material	Fin Spacing (fpi)	Tube Thickness (in)	Casing Material	Coil Coating
HC[1]	0.010 Aluminum	12	0.035	Galvanized	None

Header and Connection Configuration					
Segment[Index]	Header Material	Connection Material	Connection Type	Connection Location/Rotation	Condensate Conn Dia(in)
HC[1]	Copper	Red Brass	MPT	Left	2

Other Performance		
Segment[Index]	Dry Weight (lbs)	Fluid Weight (lbs)
HC[1]	112	4

Notes

- Performance is shown for the entire coil bank. Performance is not per coil.
- Coil index indicates position in segment. Example: CC-1, index 1; Spacer, index 2; CC-1, index 3
- Ratings are for coils manufactured by Johnson Controls, Inc., 507 E. Michigan St., Milwaukee WI 53202.
- All Coils: AHRI Certified: Yes. Certified in accordance with the AHRI Forced-Circulation Air-Cooling and Air-Heating Coils Certification Program which is based on AHRI Standard 410 within the range of Standard rating conditions listed in Table 1 of the Standard. Certified units may be found in the AHRI Directory at www.ahridirectory.org.
- All Coils: SDC Tube Spacing: 3.00
- All Coils: Coil Dll Version: 8.6

Drain(s)

Details			
Segment	Drain Pan		
	Liner Material	Connection Location	Liner Coating
CC	Stainless Steel, 304	Left	None
HM	Stainless Steel, 304	Left	None

Filter(s)

Details							
Segment	Type	Depth	Filter Loading	Media/MERV	# of Spares	Spare Filter Media	Frame Material
RF	Pre Filter	2"	Side	Pleated 30% Efficiency (MERV 8)	-	-	Galvanized Steel
RF	Primary Filter	4"	Side	Mini Pleat 60% Efficiency (MERV 11)	-	-	

Sizes						Filter Gauge Details		
Segment	Filter	1st Filter Size H x W (in)	1st Qty	2nd Filter Size H x W (in)	2nd Qty	Location	Type	Range (in w.g)
RF	Pre Filter	24x24	2	12x24	2	Door	Combined Minihelic	0 - 5.0
RF	Primary Filter	24x24	2	12x24	2			

Damper(s)

Details												
Segment	Air Path	H x W (in)	Qty	Total Face Velocity (ft/min)	Face Area (ft²)	Airflow (CFM)	Min Airflow Measurement (CFM)	Type	Config	Model	Material	Blade Orientation
EE	Exhaust Air	21.00 x 26.00	1	1,846	3.8	7,000	-	Control	100%	CD60	Galvanized	Parallel
EE	Mixed Air	21.00 x 32.00	1	1,500	4.7	7,000	-	Control	100%	CD60	Galvanized	Parallel
EE	Outside Air	21.00 x 39.00	1	1,231	5.7	7,000	-	Control	100%	CD60	Galvanized	Parallel

Hood(s)

Details								
Segment	Air Path	Quantity	H x W x D(in)	Face Velocity (ft/min)	Airflow (CFM)	Moisture Eliminator	Bird Screen	Weight (lbs)
EE	Outside Air	1	31.63 x 47.70 x 28.00	792	7,000	-	Yes	82
EE	Exhaust Air	1	31.63 x 33.70 x 27.00	1,170	7,000	-	Yes	65

Notes

Hoods ship loose

Door(s)

Details												
Segment(s)	Location	Swing	Hinge Location	H x W x T (in)	View Port	ViewPort Wire	Test Port	Spare Gasket	Thermal Break	Fastener Type	Safety Latch	Noncontact Safety Interlock
EE	Left	Outward	Front	42 x 18 x 2	None	-	-	-	-	Plated	-	-
RF	Left	Outward	Front	42 x 10 x 2	None	-	-	-	-	Plated	-	-
XA	Left	Outward	Front	42 x 18 x 2	None	-	-	-	-	Plated	-	-
CC	Left	Outward	Rear	42 x 18 x 2	None	-	-	-	-	Plated	-	-
HM	Left	Outward	Front	42 x 18 x 2	None	-	-	-	-	Plated	-	-
FS	Left	Outward	Rear	42 x 19 x 2	None	-	-	-	-	Plated	Yes	-
IP	Left	Outward	Front	42 x 18 x 2	None	-	-	-	-	Plated	-	-
FR	Left	Outward	Rear	42 x 18 x 2	None	-	-	-	-	Plated	Yes	-

Humidifier

Performance Details							
AirFlow (CFM)	Humidification Load (lbs/hr)	EAT (°F)	Entering Air RH (%)	LAT (°F)	Leaving Air RH (%)	Absorption Distance (in)	Steam Pressure (PSI)
7,000	147	55	5	55	55	13.44	15

Manifold Details						
Quantity	Connection Location	Steam Inlet Connection (in)	Condensate OutletConnection (in)	Water Type	Insulated Tubes	Assembly Weight (lbs)
1	Left	0.5	0.75	Potable	-	72.8

Control Valve Details*			
Material	Cv	Control Valve Connection (in)	Control Signal
Bronze	4.40	0.500	0-10 VDC

Options*
Air Proving Switch

Notes

*Components shipped loose; to be installed by customer.

Motor Control(s)

VFD Details									
Segment	Type	V/Ph/Hz	Input/Output Amps*	Efficiency (%)	Heat Loss (at 100% load)	Enclosure	Bypass	Disconnect Type	RFI/EMI EMC Filter
FS	AYK-580	460/3/60	23/23	98	322	NEMA 3R	-	Fused	Yes
FR	AYK-580	460/3/60	12/12	98	174	NEMA 3R	-	Fused	Yes

Notes (ABB VFD)

*Drives are rated for use below 3,000 ft and 104°F. Refer to the Air-Mod Engineering Guide Form 100.42-EGI (813) for additional information.

Drives are current rated devices. The HP ratings provided are for reference only and are based on typical 4-pole motors at nominal voltages (NEC Table 430-150). If full motor torque is required, ensure the drive has a continuous current rating equal to, or greater than, the full load amp rating of the motor.

Storage Temperature: -40°F to 158°F (-40°C to 70°C).

Ambient Operating Temperature: Temperate 5°F to 104°F (-15°C to 40°C). De-rating to operate at 122°F (50°C).

Relative Humidity: 5% to 95% non-condensing. Maximum relative humidity is 60% in the presence of corrosive gasses.

Altitude: 100% Load Capacity (No De-rating) up to 3,300 ft. (1,000 m). 1% derating for each 330 ft. above 3,300 ft. Installations above 6,600ft. (2,000 m) require review.

If 8KHZ Switching Frequency is used, de-rate output current to 80%.

Overload Current Rating: 110% for 1 minute every 10 minutes and is capable of 130% short term-overload rating for 2 seconds our of each minute.

If applicable, motor overload protection in the bypass mode is provided by a Class 20 motor overload relay.

The customer is responsible for providing either a platform/catwalk or portable means to access the VFD when the VFD is installed where the center of the handle of the disconnecting means in its uppermost position is greater than 78” above the finished floor.

Input line Impedance: 5% Equivalent Input Impedance with internal reactor(s). Patented swinging choke design for superior harmonic mitigation.

Use Copper Conductors Only. Do not use aluminum wire.

Face Velocity and Static Pressure

Summary						
Segment	Description	Face Area (ft²)	Airflow (CFM)	Face Velocity (ft/min)	Supply Fan Static Pressure (in w.g.)	Exhaust/Return Fan Static Pressure (in w.g.)
EE	CD60 (Control Damper 60 - Galvanized Airfoil)	5.7	7,000	1,231	0.04	0.00
EE	Outside Air Opening	5.7	7,000	1,231	0.25	0.00
EE	Standard Hood	8.8	7,000	792	0.03	0.00
EE	Bird Screen	8.8	7,000	792	0.10	0.00
RF	2" Pleated 30% Efficiency (MERV 8)	12.0	7,000	583	0.36	0.00
RF	Dirty Filter Allowance - Pre Filter	0.0		0	0.50	0.00
RF	4" Mini Pleat 60% Efficiency (MERV 11)	12.0	7,000	583	0.73	0.00
RF	Dirty Filter Allowance	0.0		0	0.50	0.00
CC	Cooling - 10 Row - 12 Fins Per Inch	13.3	7,000	527	1.47	0.00
HC	Heating - 1 Row - 12 Fins Per Inch	11.5	7,000	611	0.11	0.00
HM	Humidifier	0.0	7,000	0	0.02	0.00
FS	External Static - User Entered	0.0		0	3.00	0.00
DP	Supply Air Opening	4.6	7,000	1,527	0.39	0.00
IP	Return Air Opening	4.6	7,000	1,527	0.00	0.39
FR	External Static - User Entered	0.0		0	0.00	1.50
EE	CD60 (Control Damper 60 - Galvanized Airfoil)	3.8	7,000	1,846	0.00	0.10
EE	Exhaust Air Opening	3.8	7,000	1,846	0.00	0.57
EE	Standard Hood	6.0	7,000	1,170	0.00	0.07
EE	Bird Screen	6.0	7,000	1,170	0.00	0.10
				Total	**7.50**	**2.73**

Dimensions and Weight

Details					
Segment	Description	Length[1] (in)	Height (in)	Width[2] (in)	Weight[3] (lbs)
IP	Inlet Plenum	21	48	63	406
FR	Fan (Return)	38	48	63	803
EE	Economizer	84	48	63	1,188
RF	Rigid Filter	13	48	63	170
XA	Access	18	48	63	201
CC	Cooling Coil	38	48	63	935
HC	Heating Coil	7	48	63	238
HM	Humidifier	48	48	63	571
FS	Fan (Supply)	44	48	63	1,055
DP	Discharge Plenum	6	48	63	235
	Overall	**317**			

Notes

[1]The length includes bottom tier segments only.

[2]The width does not include coil connection extensions or door latches that extend beyond the unit casing. The width does not include the depth of any pipe chases.

[3]See Shipping Summary for notes on weights.

Recommended Trap Height

Details									
Segment	Applicable Fan	Fan TSP (in w.g.)	Positive or Negative	Calculated Dimensions (in)			Recommended Dimensions (in)		Base Rail Height (in)
				H	X	H + X	H	H + X	
CC	Supply Fan	7.50	Negative	7.98	3.99	11.97	8.00	12.00	6

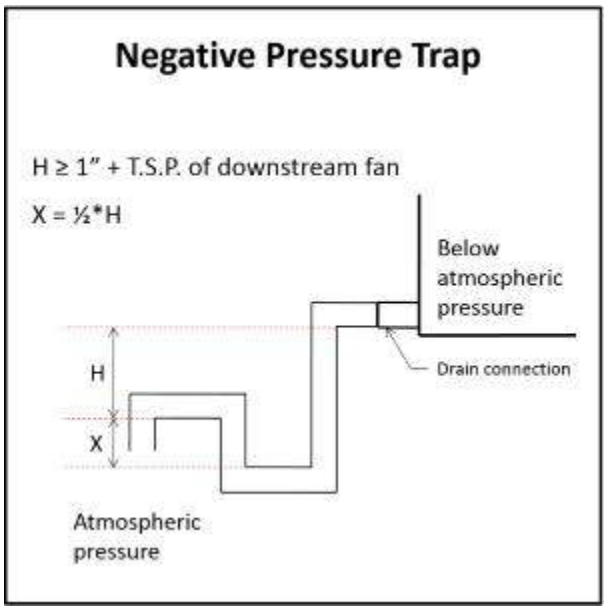

Notes
Formulas and calculations are recommendations only. Contractor shall determine actual dimensions required for each trap based on jobsite conditions, and application requirements.
Refer to the Installation Manual of the IOM for more information.

Statement of Compliance

Details
Air Handling Unit AHU's meet IBC seismic requirements for non-critical equipment (Ip = 1.0) for locations with design spectral response Sds <= 0.43. Units must be rigid mounted.
The anchorage of the unit to the ground or building structure needs to be evaluated by and is the responsibility of the engineer of record.
Specification of seismic requirements is the responsibility of the project design engineer. If formal certification is required, please contact your sales representative and/or application engineer for review. Certain application and site requirements may require additional cost and/or lead time.
Component locations are listed as Segment Hand (Unit Hand): ex. Left (Right). See Submittal Drawing for additional details.
Air handling unit parameters vary depending on conditions. Parameters such as airflows, air pressure drops, and coil capacities are shown for design conditions.

Shipping Summary

Details				
Skid	**Skid Length (in)**	**Skid Height (in)**	**Skid Width (in)**	**Skid Weight (lbs)**
DP FS HM HC CC XA RF EE FR IP	321	60	82	5,711
Weather Hood(s)	N/A	N/A	N/A	147
Overall				**5,858**

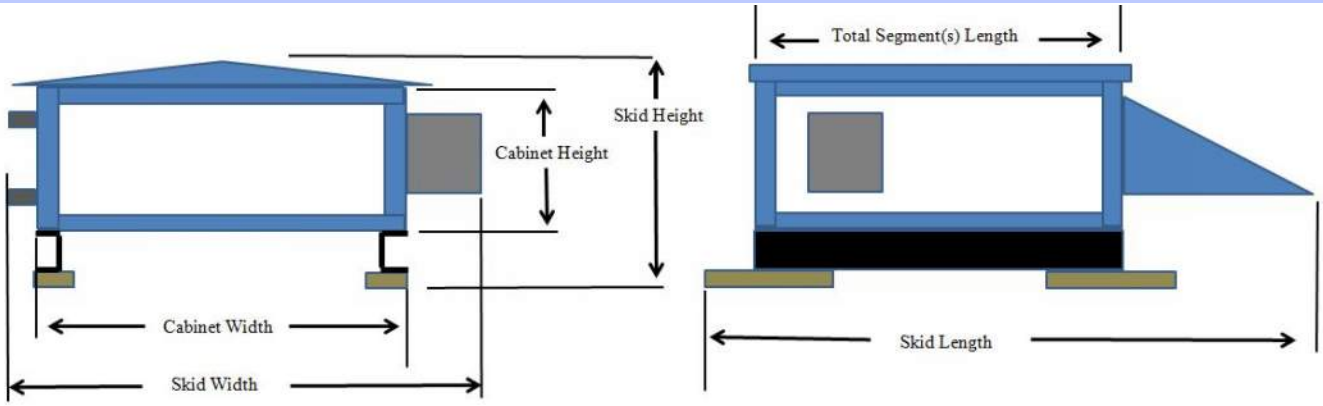

Notes

Skid Width: Total width of the shipping skid, including any items that may extend beyond the cabinet (this includes any door handles, coil connections, drain connections, lifting lugs, mounted pipe-chases, electrical/control components, tie-down brackets, side dampers).

Skid Height: Total height of the shipping skid, including any items that may extend beyond the cabinet (this includes any base-rails, shipping wood-blocks, roof peak, discharge flanges, mounted gas-furnace flue pipes).

Skid Length: Total length of the shipping skid, including any items that may extend beyond the cabinet (this includes any mounted rain-hoods, discharge flanges, tie-down brackets, shipping wood-blocks, front dampers, split connectors, electrical/control components, outrigging extensions, isolation dampers, inlet baskets).

Skid Weight: Weight values represent the estimated operational weight with a tolerance of +/- 10% for values greater than 5,000 lbs. Values less than 5,000 lbs. may have higher percentage variation but not any consequential shipping impact. Operational weight estimate includes unit shell, internal components and structure, and known ship loose and/or field-installed items (weather hoods, pipe chases, factory-provided filter media and estimated fluid weight in coils). Actual operating weight will be heaver due to additional field installed materials including but not limited to field-provided filter media, piping, control devices, and/or inertia base concrete.

Special Request(s)

Details				
Location	**Number**	**Description**	**Resolution**	**Status**
Unit	23556-002	Need bottom supply and return instead of end. I am not able to select the bottom to add the opening.		NotSubmitted

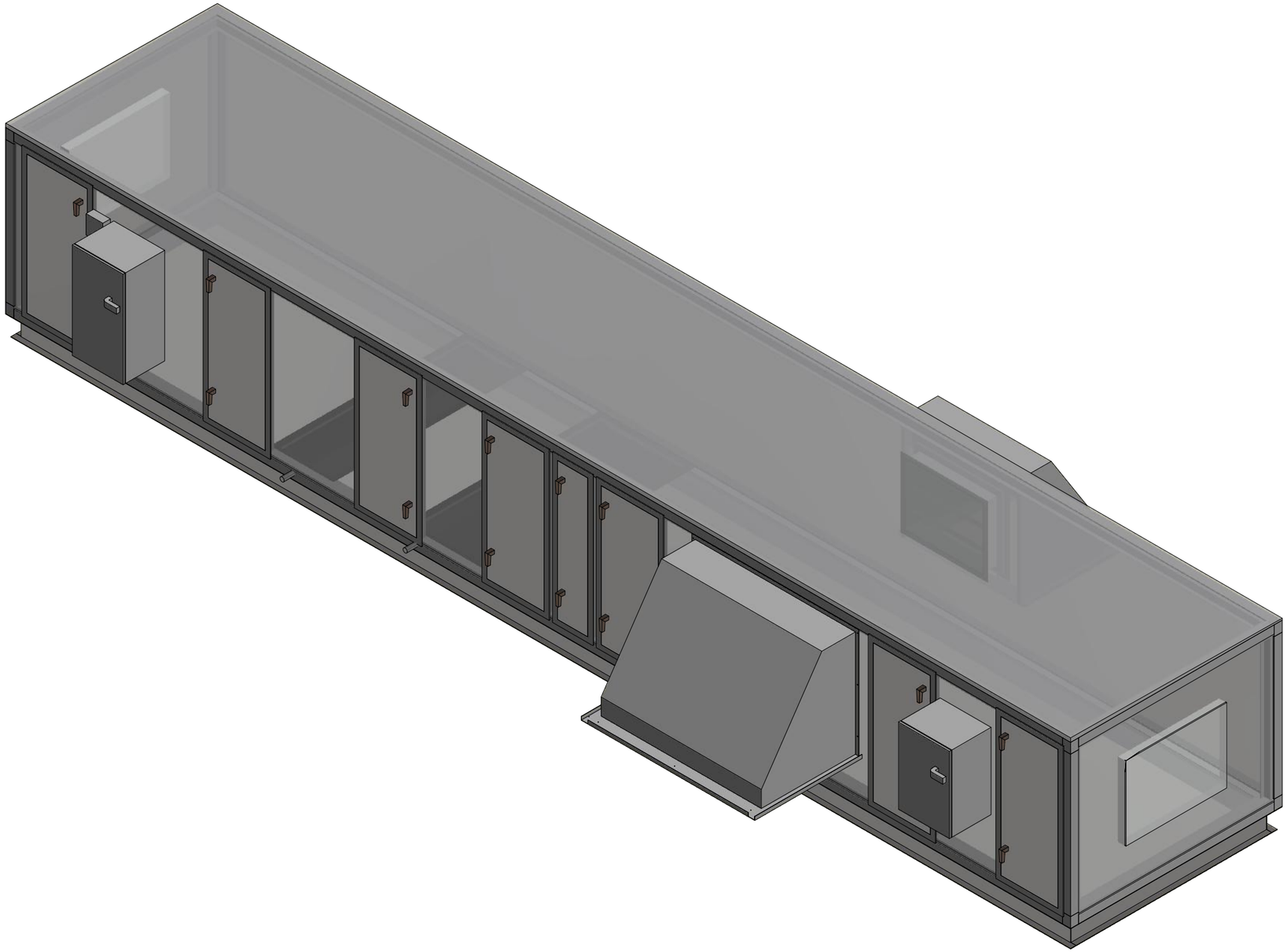

REV	DATE	REVISION CHANGE	REV BY

EaS Version: 1.23.6.2

YORK SOLUTION UNIT DRAWING

MODEL: XTO-48x63 03/26/2024 08:26:33 PM UTC
DESIGNATION: AHU-2 50-OA
PROJECT NAME: HINES

ISOMETRIC VIEW

SHEET 1 OF 3 CONTRACT#:

UNIT TAG: AHU-2 50-OA

ALL DIMENSIONS SHOWN IN: INCHES
DRAWING SCALE: NTS
DIMENSION TOLERANCES: UNIT (+/- 1/2"); PIPING (+/- 2")
WEIGHT: 5802 (+/- 10%)
DRAWING NOT TO BE USED FOR CONSTRUCTION

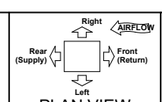

PLAN VIEW

YORK Solution™

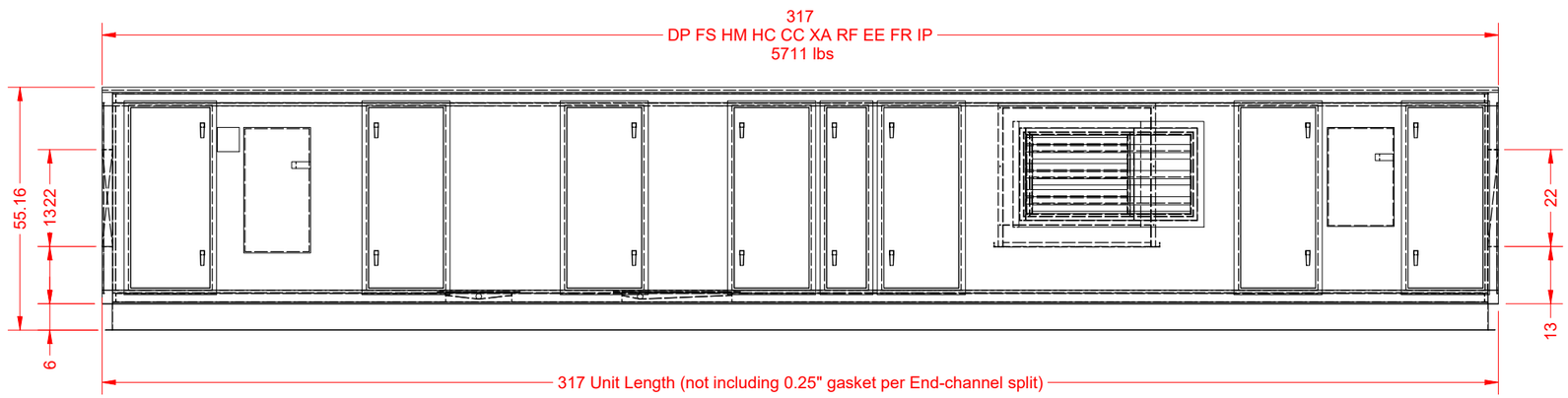

REV	DATE	REVISION CHANGE	REV BY

EaS Version: 1.23.6.2

YORK SOLUTION UNIT DRAWING

MODEL: XTO-48x63 03/26/2024 08:26:33 PM UTC
DESIGNATION: AHU-2 50-OA
PROJECT NAME: HINES

ELEVATION VIEW

SHEET 2 OF 3 CONTRACT#:
UNIT TAG: AHU-2 50-OA

ALL DIMENSIONS SHOWN IN: INCHES
DRAWING SCALE: NTS
DIMENSION TOLERANCES: UNIT (+/- 1/2"); PIPING (+/- 2")
WEIGHT: 5802 (+/- 10%)
DRAWING NOT TO BE USED FOR CONSTRUCTION

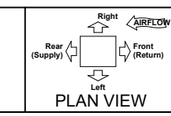

PLAN VIEW

YORK Solution™

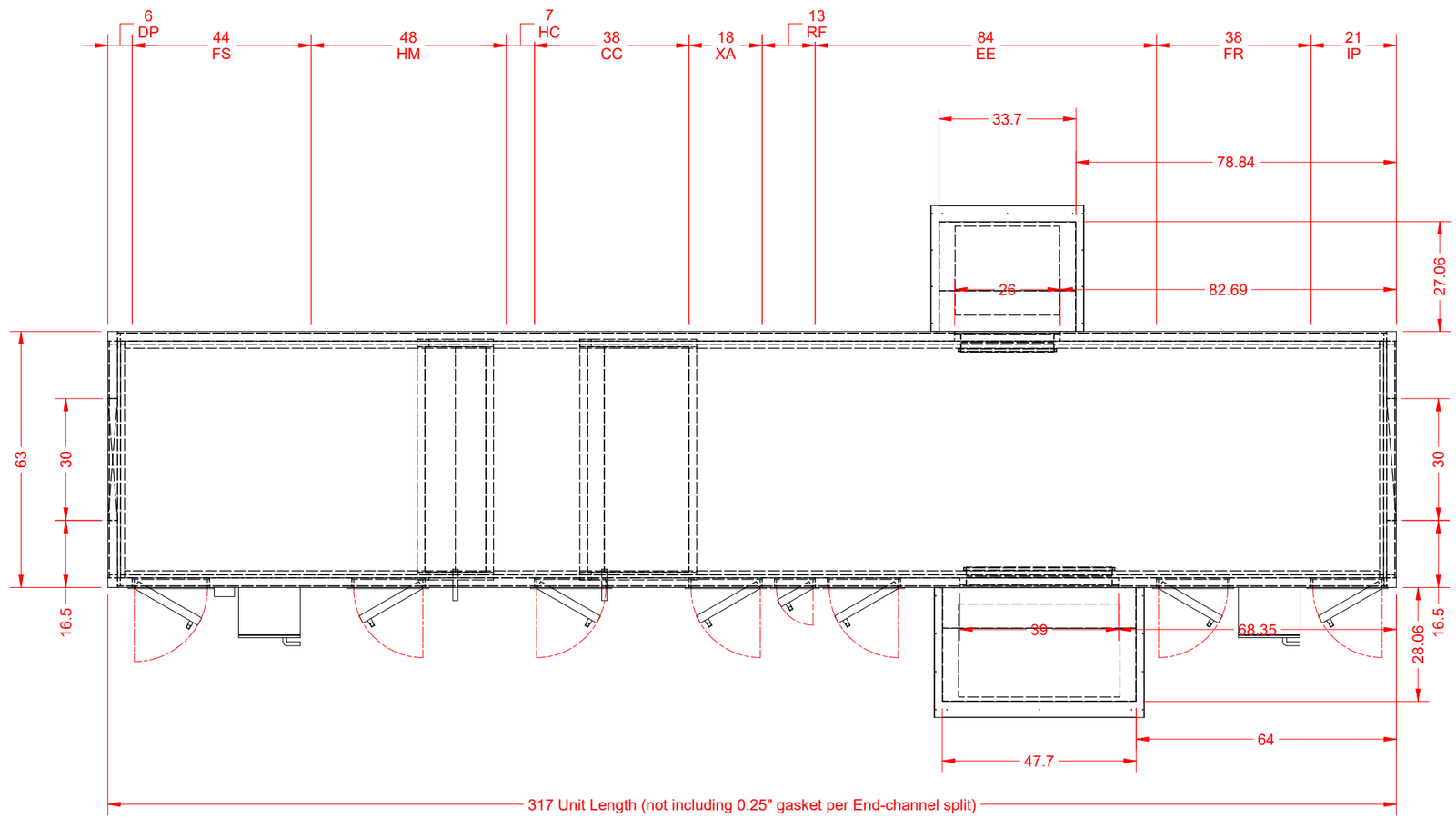

REV	DATE	REVISION CHANGE	REV BY

EaS Version: 1.23.6.2

YORK SOLUTION UNIT DRAWING

MODEL: XTO-48x63 03/26/2024 08:26:33 PM UTC
DESIGNATION: AHU-2 50-OA
PROJECT NAME: HINES

PLAN VIEW

SHEET 3 OF 3 CONTRACT#:

UNIT TAG: AHU-2 50-OA

ALL DIMENSIONS SHOWN IN: INCHES
DRAWING SCALE: NTS
DIMENSION TOLERANCES: UNIT (+/- 1/2"); PIPING (+/- 2")
WEIGHT: 5802 (+/- 10%)
DRAWING NOT TO BE USED FOR CONSTRUCTION

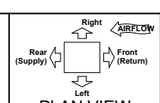

PLAN VIEW

YORK Solution™

Air Cooled Chiller Unit

Primary Unit Rating

Created By: Alison Pippenger 2/16/2024 9:15:06 AM

JESS Version: 4.2.1 DB: 1.5.3

Model

Packaged Air-Cooled Scroll Chiller

ACCS-040-F-A-G-2-0-0-0-0-0-0-1-0-0-A-A-0-0-0-5-0-1-A-0-0-A-0-0-A-C-0-C-0

Job Information

Job Name:	Hines	Job Number:	
Job Location:	Illinois	Sales Person:	Jake Brodette
Tag Name:	CH-1	Customer:	Bancroft

Conditions of Service

Percent Full Load:	100%		Cooling Efficiency:	1.0812	kW/Ton
Cooling Capacity:	35.09	Tons	Compressor Efficiency:	0.9261	kW/Ton
Total Unit Power:	37.94	kW	Energy Efficiency (EER):	11.10	Btu/W*h
Compressor Power:	32.50	kW	Max Operating Pressure:	150	psi
Fan Power:	4.94	kW	Installed Equip. Elevation:	0	ft

Waterside Evaporator

Fluid:	Propylene Glycol		Fluid Concentration	30	%
Entering Fluid Temp.:	54.0	°F	Fouling Factor	0.0001	(hr. ft^2 F/Btu)
Leaving Fluid Temp.:	42.0	°F	HXC Pressure Drop	2.64	psi
Fluid Flow Rate:	74.25	gpm	HXC Pressure Drop	6.09	ft. H_2O
Cooling Capacity:	421.12	MBH	Fluid Freezing Point	8.98	°F
Sat. Suction Temp. Cir. A:	37.76	°F			
Sat. Suction Temp. Cir. B:	37.06	°F			

Airside Condenser

Entering Air Dry / Wet Bulb:	91.5 / 76.4	°F	Sat. Condensing Temp. Cir. A:	110.59	°F
Leaving Air Dry / Wet Bulb:	109.8 / 80.9	°F	Sat. Condensing Temp. Cir. B:	112.63	°F
Low Ambient Control:	32	°F	Discharge Temp. Cir. A:	180.94	°F
Heat Rejection Capacity:	532.02	MBH	Discharge Temp. Cir. B:	181.64	°F

Electrical Characteristics

Unit Power Supply:	460/60/3	V/Hz/Ph	MOP:	110	Amps
Minimum Voltage:	414	Volts	MCA:	87	Amps
Maximum Voltage:	506	Volts			
Short Circuit Current Rating:	5	kA			

	Model	Qty	kW	RPM	FLA	RLA
Compressor 1A:	VZH117	1				36
Compressor 2B:	DSH240	1				33
Condenser Fan(s):	AKFG800	2	2.47	1099	4.37	

Physical Information (does not include weights of options or accessories)

Length:	86.40	inches	Refrigerant:	R454B
Width:	39.40	inches		
Height:	86.60	inches		
Shipping Weight:	2128.00	lbs. (+/-5%)		

Sound Power (dBA)

94.90 Sound power value represents compressors and fans with no sound attenuation. Sound attenuation options selected will lower the displayed sound value.

Unit Drawing

Created By: Alison Pippenger 2/16/2024 9:15:06 AM

JESS Version: 4.2.1 DB: 1.5.3

Model

Packaged Air-Cooled Scroll Chiller

ACCS-040-F-A-G-2-0-0-0-0-0-0-1-0-0-A-A-0-0-0-5-0-1-A-0-0-A-0-0-A-C-0-C-0

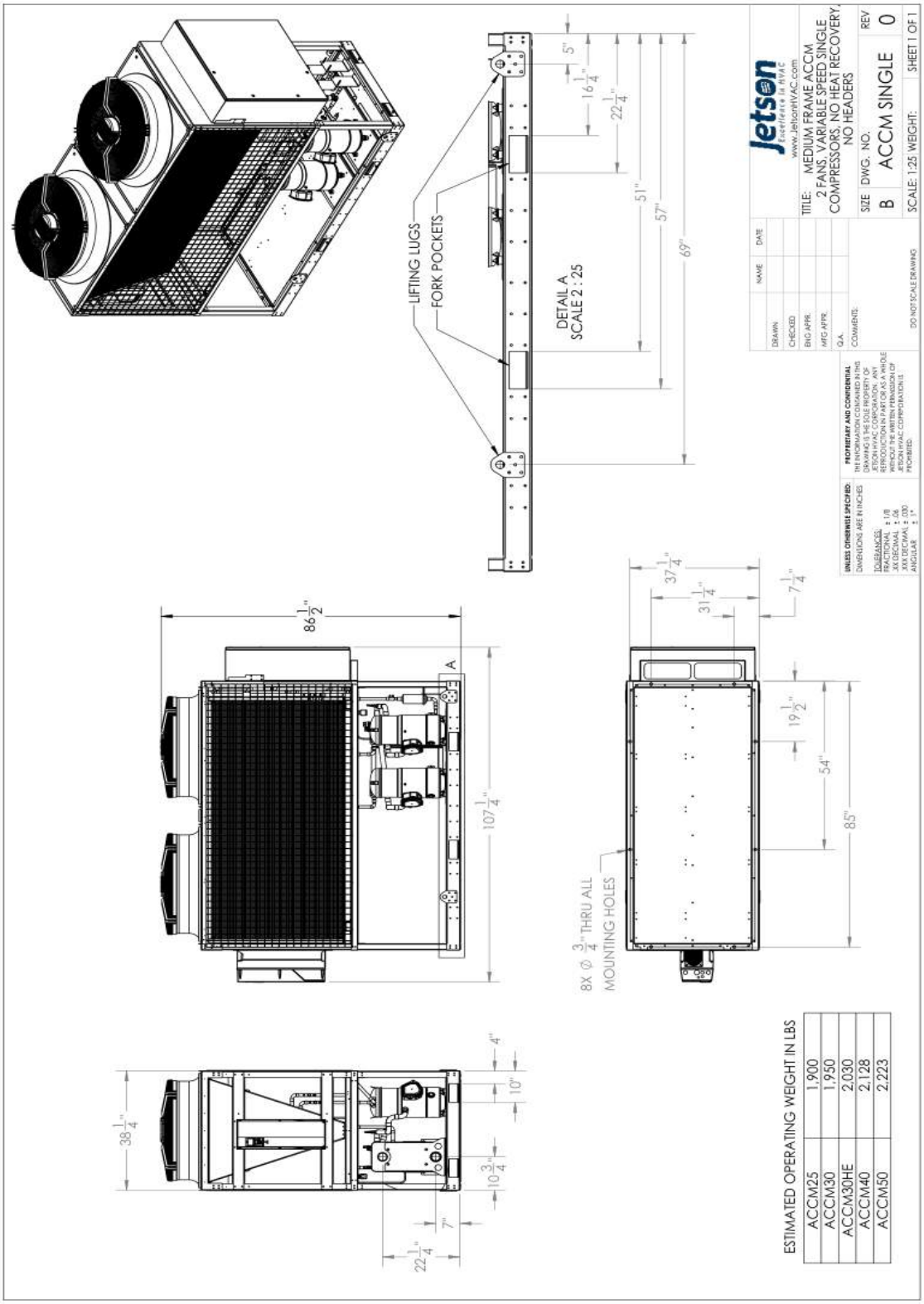

Submittal

Ref. #: SQFNT004069_4

Design Envelope Express Close-Coupled Vertical In-Line Pump

Model: Series Express Design Envelope Sensorless 4380 1505-003.0

Project name:	VSD Single Pumps 460V 1-11-24	**Representative:**	Michael Leporati
Location:		**Phone number:**	
Date submitted:	1/11/2024 9:25 PM	**e-mail:**	
Engineer:		**Submitted by:**	Leporati, Michael

Application design data

Tag number:	Single VSD 96@70	Configuration:	Single
Service:		Suction pressure:	0 ft
Location:		Fluid:	Non-Potable Fluid - Water
Qty:	1	Operating temperature:	60 ˚F
Total system flow:	96 USgpm	Duty flow per pump:	96 USgpm
System head:	70 ft	Viscosity:	31 SSU
Environment:	Indoors	Specific gravity:	1.0000
Total dissolved solids:	0 ppm	Safety factor % flow:	0 %
Efficiency at Design:	72.98 %	Safety factor % head:	0 %
NPSHR:	9.82 ft	Total Absorbed Power:	2.33 hp
Min. maintained system pressure*:	28 ft	Impeller diameter:	4.96 in
Standby qty:	0	Pump/motor run qty:	1
PElvl:	0.45	ERvl:	55
Outlet velocity:	15.13 ft/s		
Redundancy %:	N/A		

*If minimum maintained system pressure is not known, default is 40% of design head.

Materials of construction

Construction:	Low Pressure Ductile Iron	Impeller:	316 Stainless Steel
Rating:	ANSI-125	Casing o-ring:	EPDM
Connections:	ANSI-125 Flanges Inlet: 1.5in, Outlet: 1.5in	Flush line:	Braided Stainless Steel
Casing (volute):	Ductile Iron, E-coated	Stub shaft:	Carbon Steel

Mechanical seal data

Seal type:	Inside Single Spring	Rotating face:	Resin Bonded Carbon
Manufacturer code:	C-ssc L EPSS 2A	Stationary seat:	Sintered Silicon Carbide
Springs:	Stainless Steel	Secondary seal:	EPDM
Rotating hardware:	Stainless Steel	Maximum total dissolved solids (TDS) ****:	2000 PPM

Electrical data

Supplier:	Armstrong	Insulation class:	Class F Insulation
Size:	3 hp	Motor type:	Permanent Magnet
Frame size:	IEC90	Efficiency:	IE5
Enclosure:	TEFC	Power supply:	460/3/60
Operating speed @ 100% flow:	3039 rpm	Operating speed @ 50% flow***:	2162 rpm

***Based on minimum pressure setting of 40% of design head

****Note: Please ensure proper seal is selected by inputting Total Dissolved Solids (TDS) in PPM in ADEPT if water quality is poor at site. Also select Flush Line Filter or Cyclone Separator if there are other contaminants in the fluid.

DEPM controller data

Sensorless control:	Yes-Quadratic press control	Communication port:	RS 485
Communication protocol (*):	Modbus RTU	Analog inputs:	2 (current or voltage)
Enclosure:	UL Type 12/IP55	Analog outputs:	1 (current or voltage)
Fused disconnect switch:	None	Digital inputs:	2 (programmable)
Control orientation:	L5	Digital outputs:	2 (programmable)
Expansion card:	None	Cooling:	Not Applicable
Absorbed Power/BHP at 50% load/flow and 55% of design head:	0.58 hp	Ambient temperature:	14˚F to 113˚F (up to 3280 ft elevation)
Meets ASHRAE 90.1:	No	EMI/RFI control:	Integrated filter to meet EN61800-3

(*): If Default - Field reconfigurable is selected, Default from factory will be BACnet MS/TP and can be reconfigured in the field.

Performance curve

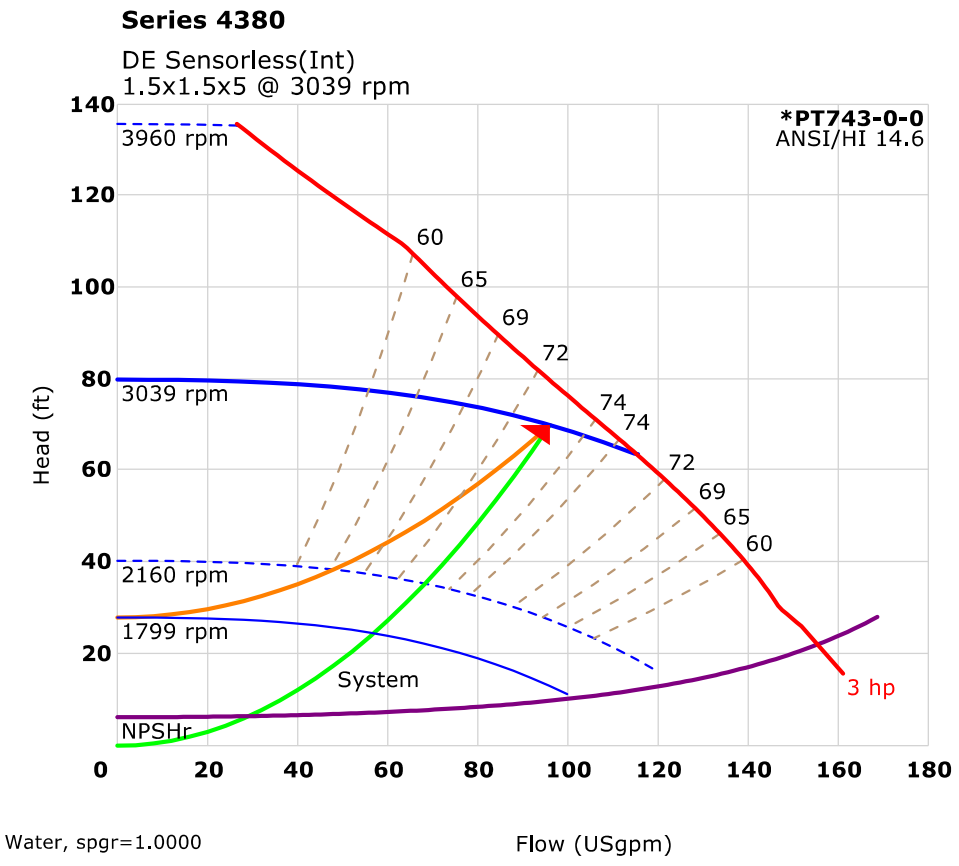

--Control Data—

1. Hmax @ 2532 rpm:
NPSHR: 9.83 ft
Intersection Pt: 96 usgpm @ 70 ft
bhp=2.33 hp, eff=72.93 %%, %bepq=90 %%

2. Control (QPC) @ 2790 rpm:
NPSHR: 7.93 ft
Intersection Pt: 84 USgpm @ 60.16 ft
bhp=1.76 hp, eff=72.35%, %bepq=85.8%

3. Control (QPC) @ 2542 rpm:
NPSHR: 6.2 ft
Intersection Pt: 71.04 USgpm @ 51 ft
bhp=1.29 hp, eff=71.04%, %bepq=79.66%

4. Control (QPC) @ 2294 rpm:
NPSHR: 4.65 ft
Intersection Pt: 56.64 USgpm @ 42.62 ft
bhp=0.89 hp, eff=68.22%, %bepq=70.47%

5. Control (QPC) @ 2047 rpm:
NPSHR: 3.31 ft
Intersection Pt: 39.36 USgpm @ 35.06 ft
bhp=0.57 hp, eff=61.11%, %bepq=54.88%

6. Hmin: 28 ft 1799 rpm:
NPSHR: 2.19 ft
Intersection Pt: 0 USgpm @ 28 ft (Head Q Min) Setting= 40% Hmax

Design envelope pumping unit capability

Operating point	Flow	Head	Efficiency
Full capability at 100% design flow	96 USgpm	84.9 ft	71.81 %
Design point	96 USgpm	70 ft	72.98 %
50% average flow (with default load profile)	48 USgpm	38.5 ft	65.41 %
Motor Capability @ Rated Speed	2.79 hp hp		

Operating limits (temperature - pressure)

Exhaust fans

Model: G-140-VG

Direct Drive Centrifugal Roof Exhaust Fan

Previously: G-143-VG

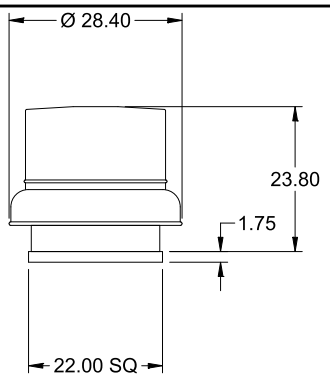

OVERALL HEIGHT MAY BE GREATER DEPENDING ON MOTOR, ADAPTER, AND/OR HINGE BASE.

Dimensional	
Quantity	1
Weight w/o Acc's (lb)	57
Weight w/ Acc's (lb)	63
Standard Curb Cap Size (in.)	22 x 22
Roof Opening (in.)	18.5 x 18.5

Performance	
Requested Volume (CFM)	2,400
Actual Volume (CFM)	2,400
Total External SP (in. wg)	0.75
Fan RPM	1558
Operating Power (hp)	0.77
Elevation (ft)	673
Airstream Temp.(F)	70
Air Density (lb/ft3)	0.073
Tip Speed (ft/min)	5,965
Static Eff. (%)	37

Misc Fan Data	
Fan Eff. Index (FEI)	1.20
Outlet Velocity (ft/min)	1,818

Motor	
Motor Mounted	Yes
Size (hp)	1
Voltage/Cycle/Phase	115/60/1
Enclosure	TENV
Motor RPM	1725
Efficiency Rating	High
Windings	1
FLA (Amps)	11.5
Min. Circuit Ampacity (MCA)	14
Max. Overcurrent Protection (MOP)	30
Short Circuit Current Rtg (SCCR)	5 kA

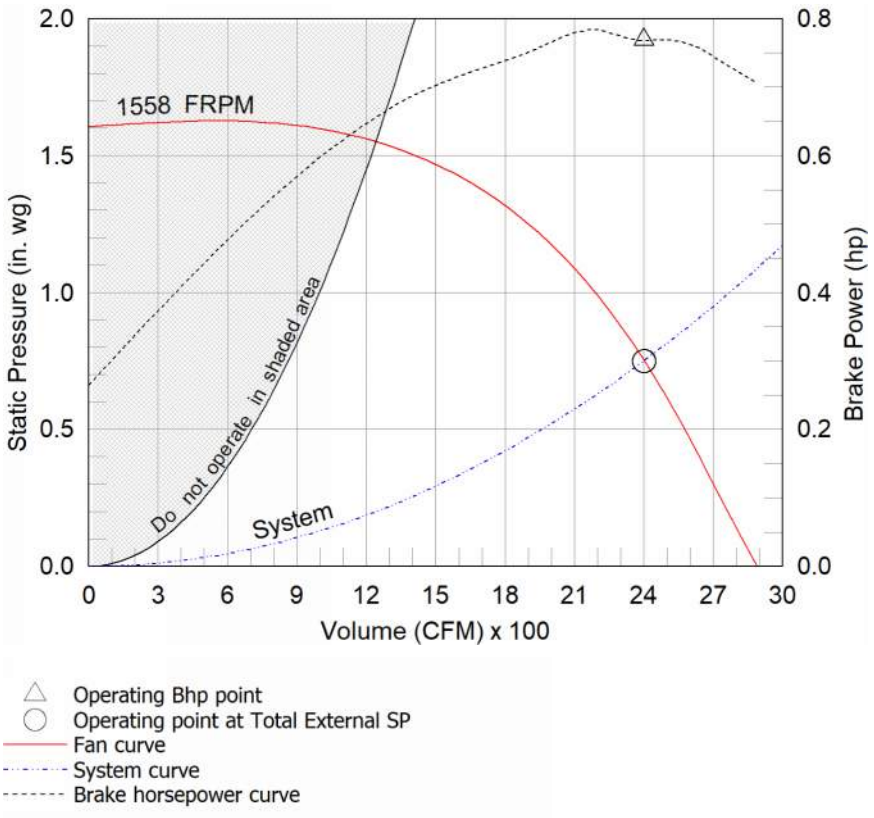

Sound Power by Octave Band

Sound Data	62.5	125	250	500	1000	2000	4000	8000	LwA	dBA	Sones
Inlet	78	79	82	73	70	68	65	57	78	66	15.1

Notes:

All dimensions shown are in units of in.
*NEC FLA, MCA and MOP are for reference only – based on tables 430.248 or 430.25 of National Electric Code 2020. Actual motor FLA may vary, for sizing thermal overload, consult factory. MCA and MOP values shown only account for the motor, not accessories (damper actuator, field supplied VFD, etc).
LwA - A weighted sound power level, based on ANSI S1.4
dBA - A weighted sound pressure level, based on 11.5 dB attenuation per Octave band at 5 ft - dBA levels are not licensed by AMCA International
Sones - calculated using ANSI/AMCA 301 at 5 ft

Model: G-120-VG

Direct Drive Centrifugal Roof Exhaust Fan

Previously: G-123-VG

Dimensional	
Quantity	1
Weight w/o Acc's (lb)	44
Weight w/ Acc's (lb)	49
Standard Curb Cap Size (in.)	19 x 19
Roof Opening (in.)	15.5 x 15.5

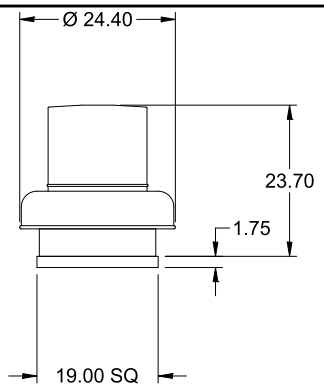

OVERALL HEIGHT MAY BE GREATER DEPENDING ON MOTOR, ADAPTER, AND/OR HINGE BASE.

Performance	
Requested Volume (CFM)	1,250
Actual Volume (CFM)	1,250
Total External SP (in. wg)	0.62
Fan RPM	1359
Operating Power (hp)	0.24
Elevation (ft)	673
Airstream Temp.(F)	70
Air Density (lb/ft3)	0.073
Tip Speed (ft/min)	4,648
Static Eff. (%)	51

Misc Fan Data	
Fan Eff. Index (FEI)	-
Outlet Velocity (ft/min)	1,344

Motor	
Motor Mounted	Yes
Size (hp)	1/2
Voltage/Cycle/Phase	115/60/1
Enclosure	ODP
Motor RPM	1725
Efficiency Rating	High
Windings	1
FLA (Amps)	6.4
Min. Circuit Ampacity (MCA)	8
Max. Overcurrent Protection (MOP)	15
Short Circuit Current Rtg (SCCR)	5 kA

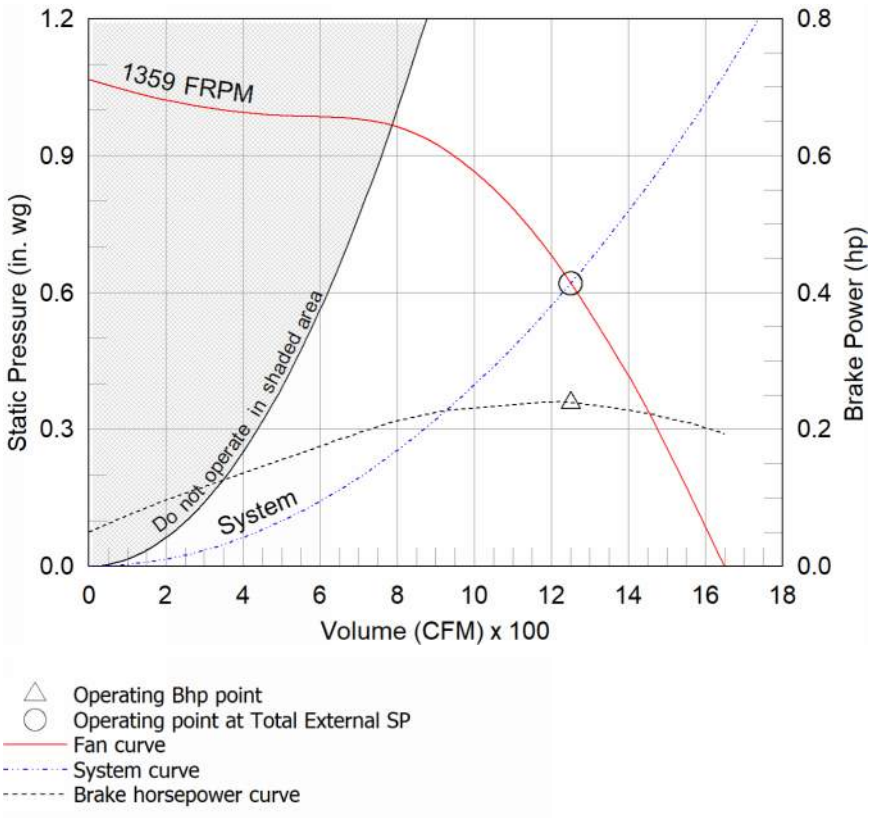

Sound Power by Octave Band

Sound Data	62.5	125	250	500	1000	2000	4000	8000	LwA	dBA	Sones
Inlet	71	76	77	71	63	62	57	55	73	62	11.2

Notes:

All dimensions shown are in units of in.
*NEC FLA, MCA and MOP are for reference only – based on tables 430.248 or 430.25 of National Electric Code 2020. Actual motor FLA may vary, for sizing thermal overload, consult factory. MCA and MOP values shown only account for the motor, not accessories (damper actuator, field supplied VFD, etc).
LwA - A weighted sound power level, based on ANSI S1.4
dBA - A weighted sound pressure level, based on 11.5 dB attenuation per Octave band at 5 ft - dBA levels are not licensed by AMCA International
Sones - calculated using ANSI/AMCA 301 at 5 ft

Model: G-140-VG

Direct Drive Centrifugal Roof Exhaust Fan

Previously: G-143-VG

Dimensional	
Quantity	1
Weight w/o Acc's (lb)	57
Weight w/ Acc's (lb)	63
Standard Curb Cap Size (in.)	22 x 22
Roof Opening (in.)	18.5 x 18.5

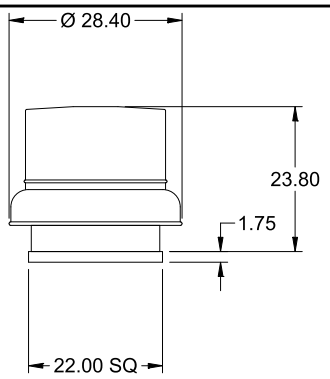

OVERALL HEIGHT MAY BE GREATER DEPENDING ON MOTOR, ADAPTER, AND/OR HINGE BASE.

Performance	
Requested Volume (CFM)	2,000
Actual Volume (CFM)	2,000
Total External SP (in. wg)	0.62
Fan RPM	1338
Operating Power (hp)	0.49
Elevation (ft)	673
Airstream Temp.(F)	70
Air Density (lb/ft3)	0.073
Tip Speed (ft/min)	5,121
Static Eff. (%)	40

Misc Fan Data	
Fan Eff. Index (FEI)	1.45
Outlet Velocity (ft/min)	1,515

Motor	
Motor Mounted	Yes
Size (hp)	1
Voltage/Cycle/Phase	115/60/1
Enclosure	TENV
Motor RPM	1725
Efficiency Rating	High
Windings	1
FLA (Amps)	11.5
Min. Circuit Ampacity (MCA)	14
Max. Overcurrent Protection (MOP)	30
Short Circuit Current Rtg (SCCR)	5 kA

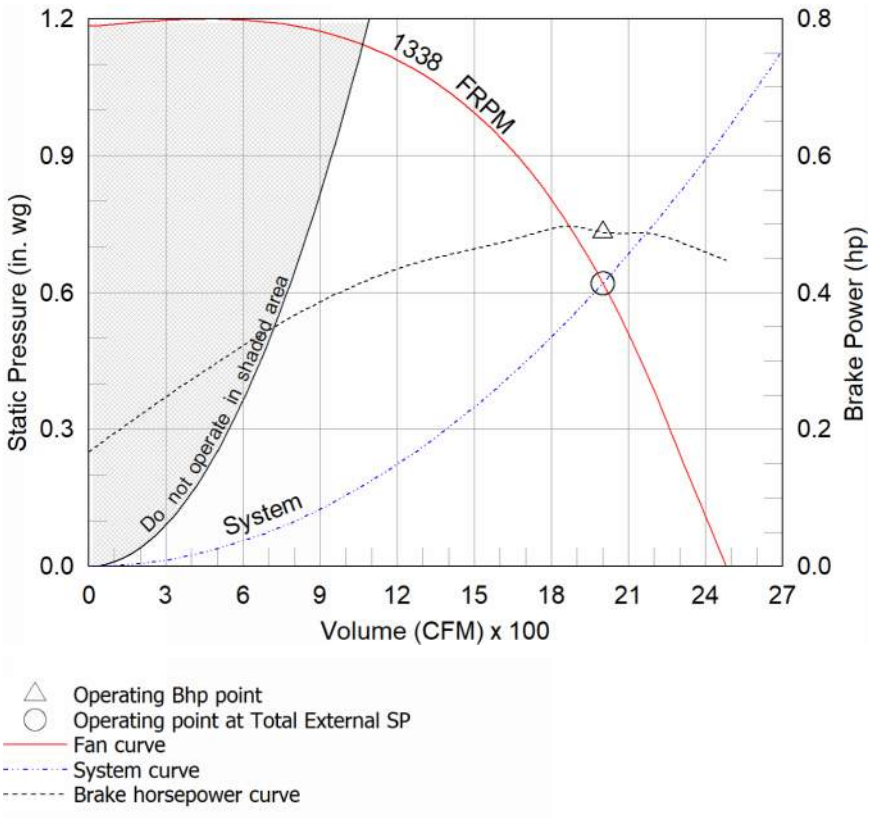

Sound Power by Octave Band

Sound Data	62.5	125	250	500	1000	2000	4000	8000	LwA	dBA	Sones
Inlet	81	77	78	72	65	64	60	54	74	63	12.4

Notes:

All dimensions shown are in units of in.
*NEC FLA, MCA and MOP are for reference only – based on tables 430.248 or 430.25 of National Electric Code 2020. Actual motor FLA may vary, for sizing thermal overload, consult factory. MCA and MOP values shown only account for the motor, not accessories (damper actuator, field supplied VFD, etc).
LwA - A weighted sound power level, based on ANSI S1.4
dBA - A weighted sound pressure level, based on 11.5 dB attenuation per Octave band at 5 ft - dBA levels are not licensed by AMCA International
Sones - calculated using ANSI/AMCA 301 at 5 ft

Diffusers

HCD

HIGH CAPACITY DRUM LOUVER

price | DIFFUSERS