SYM	REVISIONS	DATE	APPROVED

FC444 ALUMINUM SULFATE TANK REPAIRS
MCB CAMP LEJEUNE
CONSTRUCTION CONTRACT NO. N40085-24-D-0011

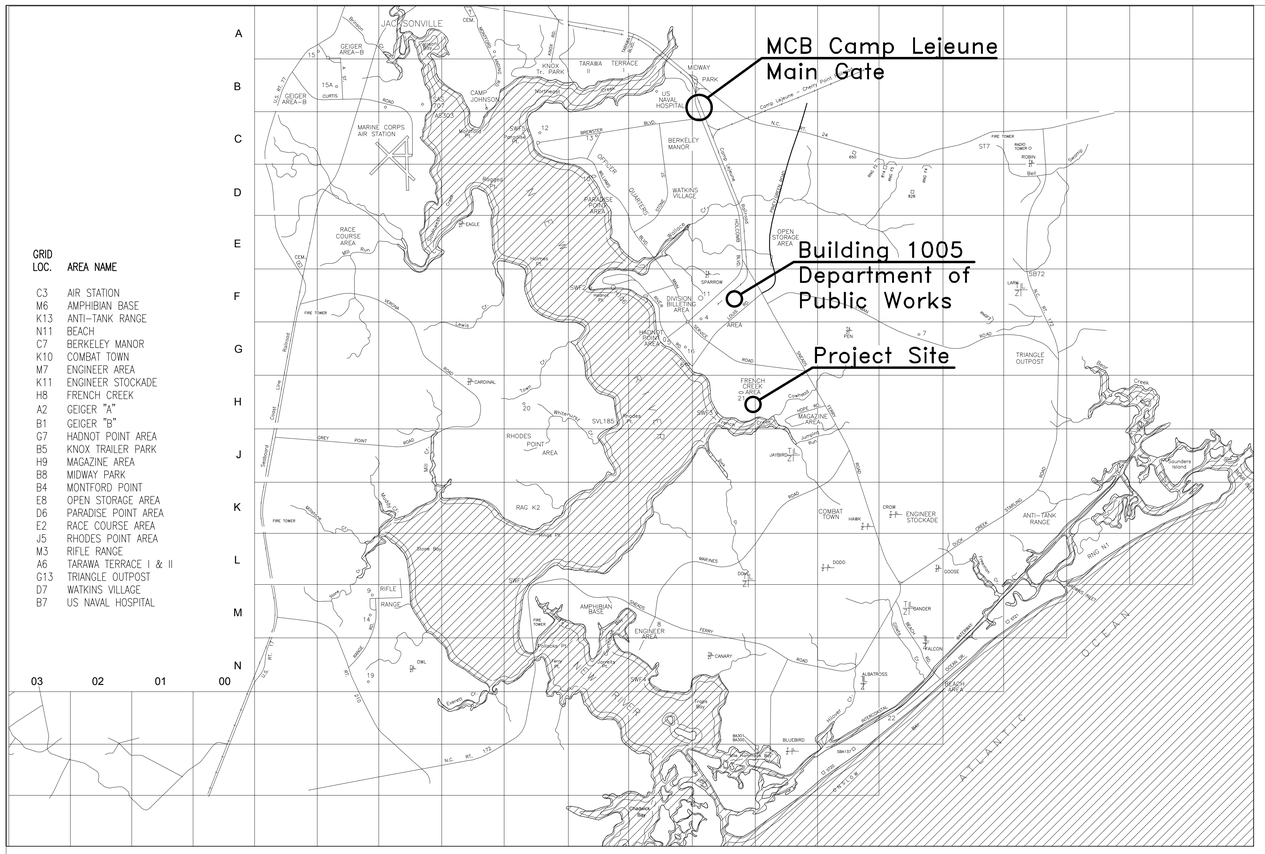

LOCATION MAP - U. S. MARINE CORPS BASE - CAMP LEJEUNE, N.C.

NTS

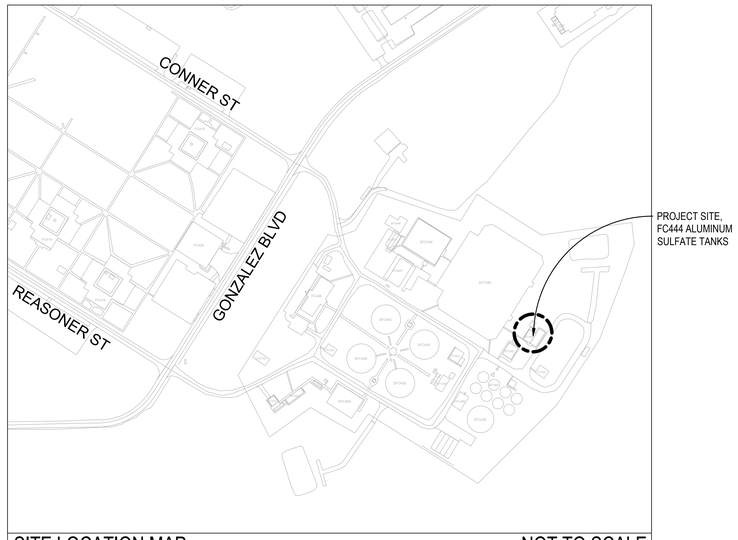

SITE LOCATION MAP NOT TO SCALE

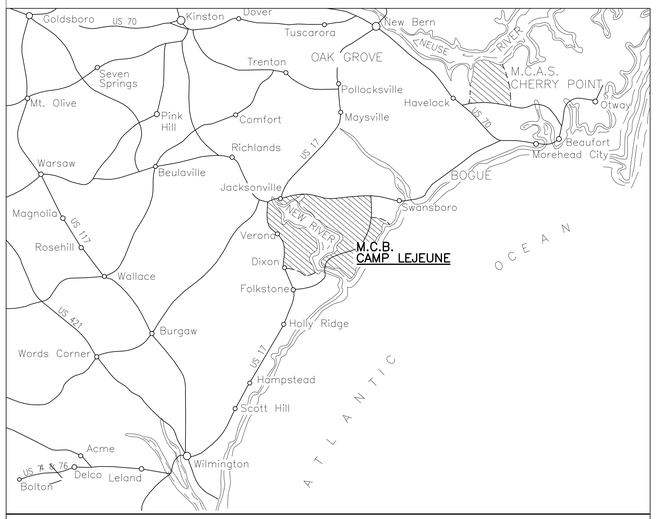

VICINITY MAP - CAMP LEJEUNE, N.C.

Note: Contractor must maintain a working aluminum sulfate feed to the plant at all times. Maximum length of time for aluminum sulfate feed outage is 24 hours.

INDEX OF DRAWINGS			
NAVFAC	SHEET NO.	SHEET	TITLE
60044618	1 OF 25	G-001	COVER SHEET
60044619	2 OF 25	G-002	GENERAL NOTES
60044620	3 OF 25	V-001	SURVEY NOTES & LEGEND
60044621	4 OF 25	VF101	EXISTING CONDITIONS PLAN
60044622	5 OF 25	V-111	ENLARGED EXISTING SULFATE TANK PLAN
60044623	6 OF 25	V-201	EXISTING SULFATE TANK ELEVATION PLAN
60044624	7 OF 25	V-301	EXISTING SULFATE TANK SECTION
60044625	8 OF 25	C-001	CIVIL NOTES & LEGEND
60044626	9 OF 25	CD101	DEMOLITION PLAN
60044627	10 OF 25	CD111	ENLARGED SULFATE TANK DEMOLITION PLAN
60044628	11 OF 25	CD201	SULFATE TANK DEMOLITION ELEVATION PLAN
60044629	12 OF 25	CD301	SULFATE TANK DEMOLITION SECTION
60044630	13 OF 25	CS101	SITE PLAN
60044631	14 OF 25	CG101	GRADING & EROSION CONTROL PLAN
60044632	15 OF 25	CU111	ENLARGED SULFATE TANK PLAN
60044633	16 OF 25	CU201	SULFATE TANK ELEVATION PLAN
60044634	17 OF 25	CU301	SULFATE TANK SECTION
60044635	18 OF 25	C-501	CIVIL DETAILS
60044636	19 OF 25	S-101	STRUCTURAL NOTES
60044637	20 OF 25	S-501	STRUCTURAL FOUNDATION PLAN
60044638	21 OF 25	E-001	SYMBOLS & ABBREVATIONS
60044639	22 OF 25	ED101	POWER DEMOLITION PLAN
60044640	23 OF 25	E-101	POWER NEW WORK PLAN
60044641	24 OF 25	E-501	DETAILS
60044642	25 OF 25	E-901	PANEL SCHEDULES AND CONTROL ONE-LNE

NORTH CAROLINA PROFESSIONAL SEAL 051957 7.15.24 ENGINEER ANDREW T. ARNOLD

100% DESIGN

G-001

NRW ENGINEERING
NRW Engineering, P.C.
748 Lord Dunmore Drive, Suite 101
Virginia Beach, VA 23464-2664

DEPARTMENT OF THE NAVY NAVAL FACILITIES ENGINEERING COMMAND
MARINE CORPS BASE
CAMP LEJEUNE, NORTH CAROLINA

Dewberry
Dewberry Engineers Inc.
2610 Wycliff Road
Suite 410
Raleigh, NC 27607-3073
919.881.9939
NC License No. F-0929

DES.	ANH
DR.	JCK
CHK.	ATA
SUBMITTED BY:	JSH
DESIGN DIR.	CHRIS MAAS, PE
APPROVED: PWO OR OICC	DATE
PWO	
SATISFACTORY TO:	DATE
MAAS.CHRISTOPHER.JETT.1398040727	Digitally signed by MAAS.CHRISTOPHER.JETT.1398040727 DN: C=US, O=U.S. Government, OU=DoD, OU=PKI, OU=USMC, CN=MAAS.CHRISTOPHER.JETT.1398040727 Date: 2024.07.18 10:54:35 -05'00'

PROJECT 25-0087
FC444 ALUMINUM SULFATE TANK REPAIRS
COVER SHEET

SIZE	CODE IDENT.NO	NAVFAC DRAWING NO.
E1	XXXXX	60044618
		CONST. CONTR. NO. N40085-24-D-0011
SCALE: NOTED	SPEC. 25-0087	SHEET 1 OF 25

SYM	REVISIONS	DATE	APPROVED

GENERAL NOTES:

1. CONTRACTOR MUST HAVE A COMPLETE SET OF CONSTRUCTION DRAWINGS, SPECIFICATIONS, ADDENDA AND APPROVED PERMITS ON THE JOB SITE AT ALL TIMES.

2. THE CONTRACTOR IS RESPONSIBLE FOR ALL LAYOUT WORK REQUIRED TO PROPERLY CONSTRUCT THE WORK.

3. CONTRACTOR MUST MAKE EVERY EFFORT TO SAVE PROPERTY IRONS, MONUMENTS, OTHER PERMANENT POINTS AND LINES OF REFERENCE AND CONSTRUCTION STAKES. PROPERTY IRONS, MONUMENTS, AND OTHER PERMANENT POINTS OF REFERENCE DESTROYED BY THE CONTRACTOR MUST BE REPLACED BY A NORTH CAROLINA LICENSED LAND SURVEYOR AT THE CONTRACTOR'S EXPENSE.

4. CONTRACTOR MUST PROVIDE MEASURES AS NECESSARY DURING CONSTRUCTION FOR EROSION & SEDIMENTATION CONTROL, PER THE NCDEQ EROSION & SEDIMENTATION CONTROL PLANNING AND DESIGN MANUAL.

5. CONTRACTOR MUST PROTECT EXISTING STRUCTURES, UTILITIES AND ALL OTHER PROPERTY UNLESS THEY ARE TO BE DEMOLISHED. ANY PROPERTY NOT AUTHORIZED FOR REMOVAL, BUT DAMAGED BY THE CONTRACTOR MUST BE RESTORED OR REPLACED BY THE CONTRACTOR TO THE APPROVAL OF THE CONTRACTING OFFICER AT NO ADDITIONAL COST TO THE GOVERNMENT.

6. UTILITY LOCATIONS:

   THE UNDERGROUND UTILITIES SHOWN ARE BASED ON UTILITIES LOCATED FROM FIELD SURVEY INFORMATION. ALL EX. UTILITIES MAY NOT BE SHOWN ON THE DRAWINGS AND LOCATION OF EX. UTILITIES (VERTICALLY AND HORIZONTALLY) ARE SHOWN IN APPROXIMATE MANNER ONLY. THE CONTRACTOR MUST VERIFY LOCATION AND ELEVATION OF EX. UTILITIES BEFORE CONSTRUCTION BEGINS AND COORDINATE CHANGES TO UTILITIES, IF NEEDED, WITH THE CONTRACTING OFFICER.

7. EXISTING UTILITIES MAY NOT BE INTERRUPTED WITHOUT APPROVAL OF THE CONTRACTING OFFICER. IF INTERRUPTION OF UTILITIES IS APPROVED, CONTRACTOR MUST PROVIDE TEMPORARY UTILITIES SERVICES. CONTRACTOR MUST PROVIDE A PLAN FOR DEMOLITION, NEW WORK, AND TIE-INS FOR UTILITIES. PLAN MUST LIST POINTS OF CONTACT AND INCLUDE SEQUENCE OF CONSTRUCTION.

8. CONTRACTOR MUST BE RESPONSIBLE FOR RELOCATION OF EXISTING UTILITIES REQUIRED DURING INSTALLATION OF NEW WORK. NO ADDITIONAL PAYMENT WILL BE MADE FOR THE RELOCATION OF EXISTING UTILITIES. CONTRACTOR MUST BEAR ALL COST ASSOCIATED WITH UTILITY RELOCATION.

9. ALL PAVEMENT DAMAGED DURING CONSTRUCTION, INCLUDING GOUGES, MUST BE REPAIRED TO THE APPROVAL OF THE CONTRACTING OFFICER. NO ADDITIONAL PAYMENT WILL BE MADE FOR PAVEMENT REPAIR. CONTRACTOR MUST BEAR ALL COST ASSOCIATED WITH PAVEMENT REPAIR.

10. CONTRACTOR MUST REMOVE AND LEGALLY DISPOSE OF ALL CONSTRUCTION WASTE AND EXCESS SOILS OFF OF GOVERNMENT PROPERTY IN ACCORDANCE WITH FEDERAL, STATE, AND LOCAL REQUIREMENTS.

11. BURNING ON-BASE IS NOT PERMITTED AT ANY TIME.

12. CONTRACTOR MUST REPAIR ANY DAMAGE DONE TO EXISTING FACILITIES LOCATED OUTSIDE THE LIMITS OF WORK DUE TO CONSTRUCTION ACTIVITIES. CONTRACTOR MUST REPAIR ALL SITE ELEMENTS TO EXISTING OR BETTER CONDITIONS IF DISTURBED DURING CONSTRUCTION.

13. CONTRACTOR MUST OBTAIN ALL REQUIRED PERMITS AND APPROVALS PRIOR TO BEGINNING CONSTRUCTION.

14. CONTRACTOR MUST MINIMIZE DUST BY USE OF WET METHODS OR OTHER APPROVED METHOD.

15. ALL DEBRIS HAULING TRUCKS MUST FULLY COVER LOADS WHEN HAULING MATERIALS FROM THE SITE.

16. CONTRACTOR MUST COORDINATE AND ESTABLISH A LAYDOWN AREA WITH THE CONTRACTING OFFICER. CONTRACTOR MUST SUBMIT A REQUEST AND OBTAIN APPROVAL FOR LAYDOWN AREA A MINIMUM OF TWO WEEKS PRIOR TO BEGINNING OF CONSTRUCTION.

17. EXCAVATION AND CONSTRUCTION MUST PROCEED IN ACCORDANCE WITH LATEST OSHA REGULATIONS.

18. ACCESS TO THE CONSTRUCTION SITES AND LAYDOWN AREA MUST BE ONLY AS DIRECTED BY THE CONTRACTING OFFICER. THE CONTRACTOR MUST NOT USE ANY ROADS, GROUNDS AND OTHER FACILITIES WHICH HAVE NOT BEEN SPECIFICALLY AUTHORIZED FOR USE. CONTRACTOR MUST COORDINATE ACCESS VIA GATES WITH CONTRACTING OFFICER.

19. ROADS AND ACCESS ROUTES USED BY THE CONTRACTOR DURING THE PERFORMANCE OF THE WORK MUST BE MAINTAINED IN GOOD CONDITION AT ALL TIMES. ALL ROADS AND ACCESS ROADS MUST BE LEFT IN A CONDITION SATISFACTORY TO THE CONTRACTING OFFICER, INCLUDING UPON COMPLETION OF THE WORK.

NORTH CAROLINA PROFESSIONAL SEAL 051957 ENGINEER ANDREW T. ARNOLD 7.15.26

Dewberry
Dewberry Engineers Inc.
2610 Wycliff Road
Suite 410
Raleigh, NC 27607-3073
919.881.9939
NC License No. F-0929

100% DESIGN

G-002

NRW ENGINEERING
NRW Engineering, P.C.
748 Lord Dunmore Drive, Suite 101
Virginia Beach, VA 23464-2664

DEPARTMENT OF THE NAVY — NAVAL FACILITIES ENGINEERING COMMAND
MARINE CORPS BASE
CAMP LEJEUNE, NORTH CAROLINA

DES.	ANH
DR.	JCK
CHK.	ATA
SUBMITTED BY:	JSH
DESIGN DIR.	CHRIS MAAS, PE
APPROVED: PWO OR OICC	DATE
PWO	
SATISFACTORY TO	DATE
Christopher Maas	16-Jul-2026

PROJECT 25-0087
FC444 ALUMINUM SULFATE TANK REPAIRS
GENERAL NOTES

SIZE	CODE IDENT.NO	NAVFAC DRAWING NO.
E1	XXXXX	60044619
		CONST. CONTR. NO. N40085-24-D-0011
SCALE: NOTED	SPEC. 25-0087	SHEET 2 OF 25

SYM	REVISIONS	DATE	APPROVED

TOPOGRAPHIC SURVEY NOTES:

1. THIS TOPOGRAPHIC SURVEY IS BASED ON A SURVEY PERFORMED BY DEWBERRY ENGINEERS INC. ON APRIL 21-22, 2026.

2. HORIZONTAL CONTROL (NAD83/2011) AND VERTICAL CONTROL (NAVD88) ESTABLISHED BY GPS OBSERVATIONS AND COMPUTED USING NORTH CAROLINA GEODETIC SURVEY VIRTUAL REFERENCE STATION SERVICE (VRS), YIELDING VALUES OF:

POINT #	NORTHING(Y)	EASTING(X)	ELEV(Z)	DESCRIPTION
1	329225.886	2503163.374	30.795	60d NAIL
2	329406.056	2502911.707	29.588	60d NAIL

3. NORTH ARROW IS GRID NORTH AND ALL DISTANCES ARE GROUND DISTANCES. PROJECT LOCALIZED ON POINT GPS #1. COMBINED GRID FACTOR (GRID TO GROUND) EQUALS 1.0000670103628O.

4. LOCATIONS OF UTILITIES SHOWN ON THIS SURVEY WERE DETERMINED BY OBSERVED EVIDENCE, LOCATION OF ABOVE GROUND UTILITY APPURTENANCES, UTILITY RECORDS PROVIDED BY THE CLIENT AND UTILITY MARKINGS (PAINT, ETC.) PROVIDED BY DEWBERRY. THESE MARKINGS WERE OBSERVED DURING THE COURSE OF THIS SURVEY, WERE FIELD LOCATED, ARE SHOWN FOR INFORMATIONAL PURPOSES, AND SHOULD BE FIELD VERIFIED IF CRITICAL. UNDERGROUND UTILITIES NOT SHOWN, MAY EXIST. STORM SEWER AND SANITARY SEWER DATA HAS BEEN COLLECTED FROM THE RIM OF THE MANHOLE WITHOUT ENTERING THE STRUCTURE. PIPE SIZES AND TYPES SHOULD BE CONSIDERED APPROXIMATE AND BE FIELD VERIFIED IF CRITICAL. STRUCTURES LABELED "VAULT", IF ANY, INDICATE A SUBSTRUCTURE WITH LIMITED VISUAL ACCESS AND INVERT INFORMATION.

LEGEND AND ABBREVIATIONS

DATUR	DRAWN ACCORDING TO UTILITY RECORD
EOI	END OF INFORMATION
	BOLLARD
	ELECTRIC BOX
	POST
	SANITARY SEWER MANHOLE
	SURVEY CONTORL
	UTILITY VALVE
	VAULT
	YARD INLET GRATE
	APPROX. DIRECTION OF UTILITY, ORIGIN/DESTINATION UNKNOWN
—X—X—X—	HAND RAIL
	AERIAL PIPES
—— UGW ——	UNDERGROUND WATER LINE
—— W ——	UNDERGROUND WATER LINE (DATUR)
—— UGE ——	UNDERGROUND ELECTRIC
—— UGU ——	UNDERGROUND UNKNOWN UTILITY
—— U ——	UNKNOWN UNDERGROUND UTILITIY (DATUR)
—— SD ——	STORM DRAIN PIPE
—— SS ——	SANITARY SEWER PIPE

NORTH CAROLINA PROFESSIONAL SEAL 051957 ENGINEER ANDREW T. ARNOLD 7.15.26

Dewberry

Dewberry Engineers Inc.
2610 Wycliff Road
Suite 410
Raleigh, NC 27607-3073
919.881.9929
NC License No. F-0929

100% DESIGN

V-001

NRW ENGINEERING
NRW Engineering, P.C.
748 Lord Dunmore Drive, Suite 101
Virginia Beach, VA 23464-2664

DEPARTMENT OF THE NAVY NAVAL FACILITIES ENGINEERING COMMAND

MARINE CORPS BASE
CAMP LEJEUNE, NORTH CAROLINA

DES.	ANH
DR.	JCK
CHK.	ATA
SUBMITTED BY:	JSH
DESIGN DIR.	CHRIS MAAS, PE
APPROVED: PWO OR OICC	DATE
PWO	
SATISFACTORY TO	DATE
Christopher Maas	16-Jul-2026

PROJECT 25-0087
FC444 ALUMINUM SULFATE TANK REPAIRS
SURVEY NOTES & LEGEND

SIZE	CODE IDENT.NO	NAVFAC DRAWING NO.
E1	XXXXX	60044620
		CONST. CONTR. NO. N40085-24-D-0011
SCALE: NOTED	SPEC. 25-0087	SHEET 3 OF 25

SYM	REVISIONS	DATE	APPROVED

GENERAL SHEET NOTES

1. SEE SHEET G-002 FOR GENERAL NOTES
2. SEE SHEET V-001 FOR SURVEY NOTES & LEGEND

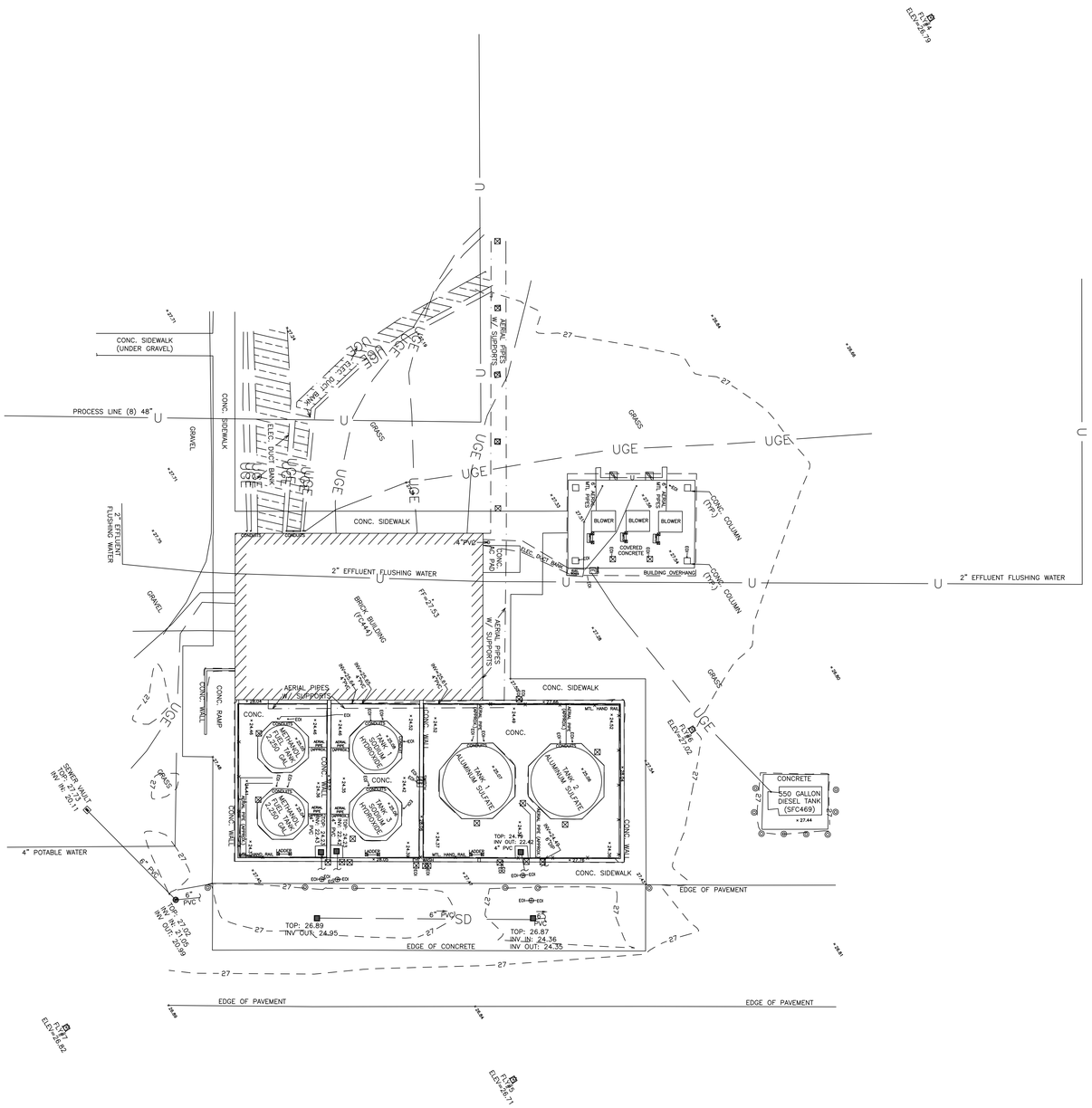

A1 EXISTING CONDITIONS PLAN
SCALE 1" = 10'

PLAN NORTH

GRAPHIC SCALE(S)

0 10' 20'

NORTH CAROLINA PROFESSIONAL SEAL 051957 7.15.26 ENGINEER ANDREW T. ARNOLD

Dewberry
Dewberry Engineers Inc.
2610 Wycliff Road
Suite 410
Raleigh, NC 27607-3073
919.881.9939
NC License No. F-0929

100% DESIGN

VF101

NRW ENGINEERING
NRW Engineering, P.C.
748 Lord Dunmore Drive, Suite 101
Virginia Beach, VA 23464-2664

DEPARTMENT OF THE NAVY NAVAL FACILITIES ENGINEERING COMMAND
MARINE CORPS BASE
CAMP LEJEUNE, NORTH CAROLINA

DES.	ANH
DR.	JCK
CHK.	ATA
SUBMITTED BY:	JSH
DESIGN DIR.	CHRIS MAAS, PE
APPROVED: PWO OR OICC	DATE
PWO	
SATISFACTORY TO	DATE
Christopher Maas	16-Jul-2026

PROJECT 25-0087
FC444 ALUMINUM SULFATE TANK REPAIRS
EXISTING CONDITIONS PLAN

SIZE	CODE IDENT.NO	NAVFAC DRAWING NO.
E1	XXXXX	60044621
		CONST. CONTR. NO. N40085-24-D-0011

SCALE: NOTED SPEC. 25-0087 SHEET 4 OF 25

SYM	REVISIONS	DATE	APPROVED

GENERAL SHEET NOTES

1. SEE SHEET G-002 FOR GENERAL NOTES
2. SEE SHEET VF001 FOR SURVEY NOTES & LEGEND
3. ENLARGED SULFATE TANK PLAN PULLED FROM RECORD DRAWINGS DATED 16 NOV 1999.

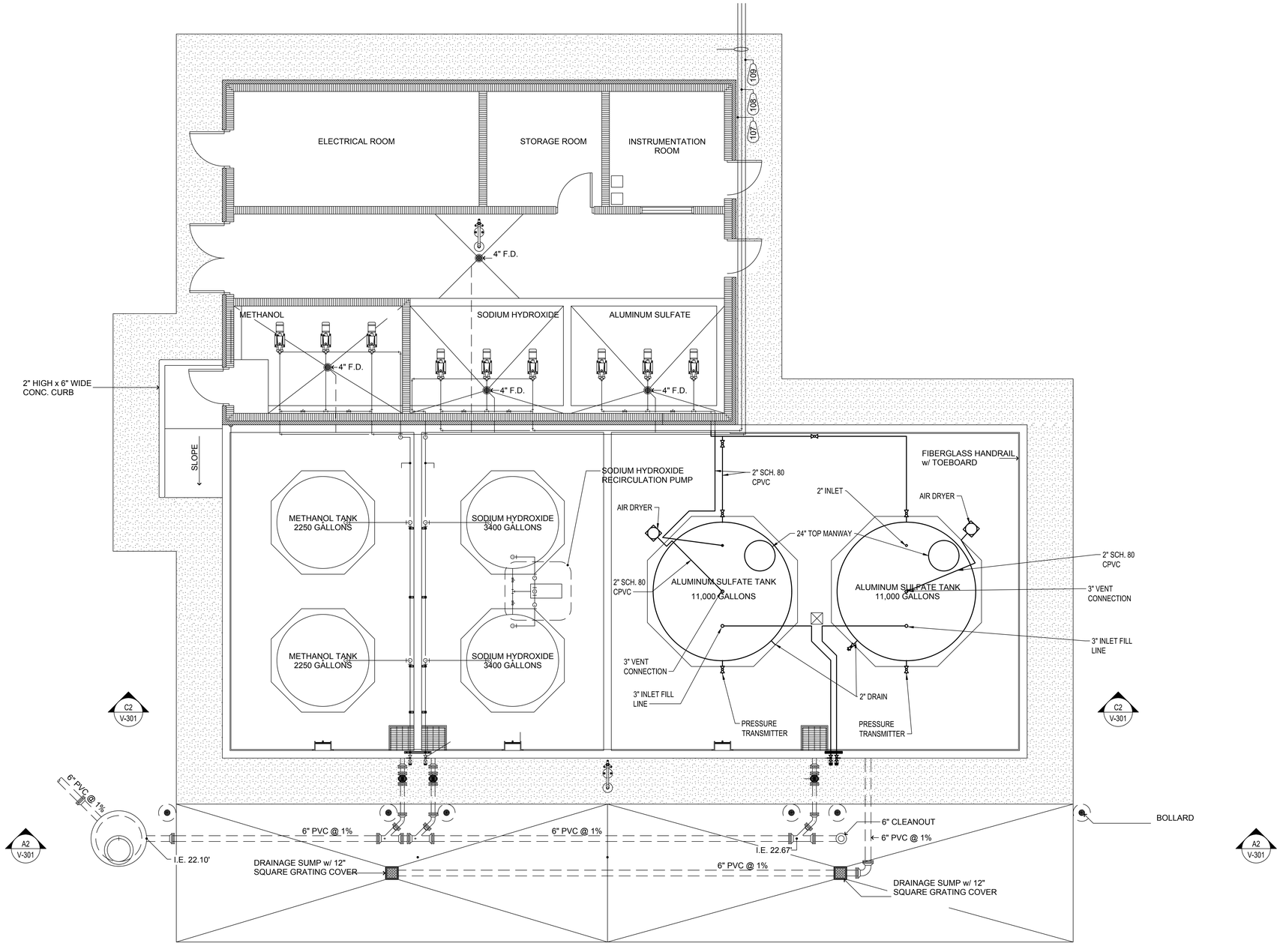

A1 ENLARGED EXISTING SULFATE TANK PLAN
NOT TO SCALE

PLAN NORTH

GRAPHIC SCALE(S)

NORTH CAROLINA PROFESSIONAL SEAL 051957 7.15.26 ENGINEER ANDREW T. ARNOLD

Dewberry
Dewberry Engineers Inc.
2610 Wycliff Road
Suite 410
Raleigh, NC 27607-3073
919.881.9939
NC License No. F-0929

100% DESIGN

V-111

NRW ENGINEERING
NRW Engineering, P.C.
748 Lord Dunmore Drive, Suite 101
Virginia Beach, VA 23464-2664

DEPARTMENT OF THE NAVY — NAVAL FACILITIES ENGINEERING COMMAND
MARINE CORPS BASE
CAMP LEJEUNE, NORTH CAROLINA

DES.	ANH
DR.	JCK
CHK.	ATA
SUBMITTED BY:	JSH
DESIGN DIR.	CHRIS MAAS, PE
APPROVED: PWO OR OICC	DATE
PWO	
SATISFACTORY TO	DATE
Christopher Maas	16-Jul-2026

PROJECT 25-0087
FC444 ALUMINUM SULFATE TANK REPAIRS
ENLARGED EXISTING SULFATE TANK PLAN

SIZE	CODE IDENT.NO	NAVFAC DRAWING NO.
E1	XXXXX	60044622
		CONST. CONTR. NO. N40085-24-D-0011

SCALE: NOTED | SPEC. 25-0087 | SHEET 5 OF 25

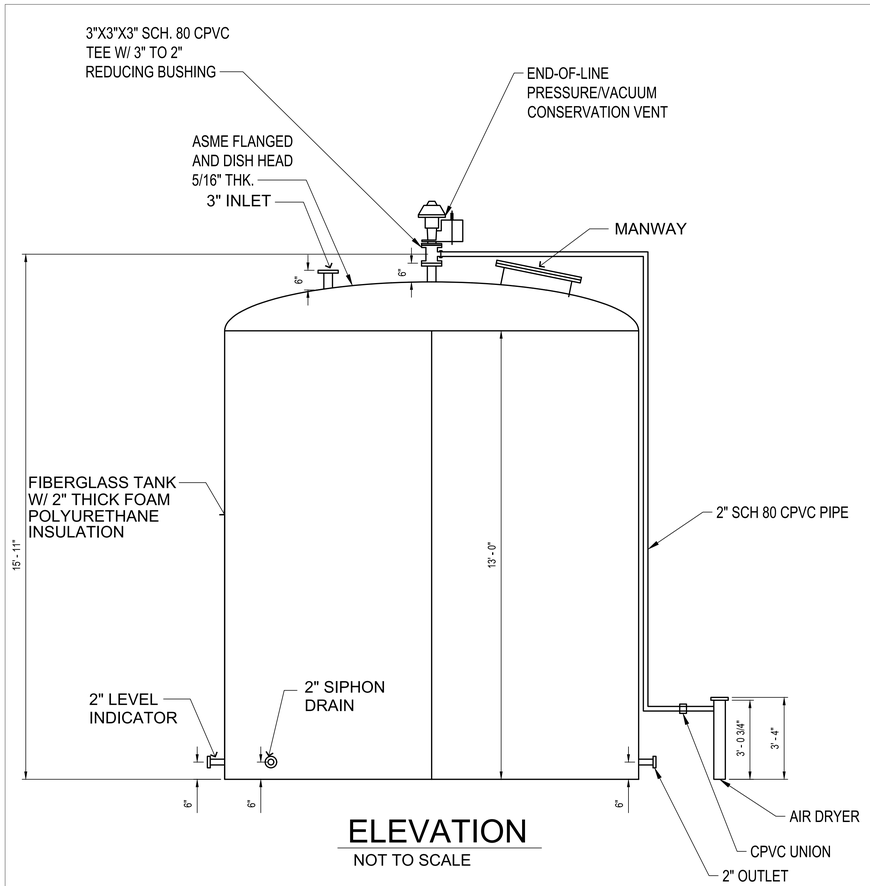

ELEVATION

NOT TO SCALE

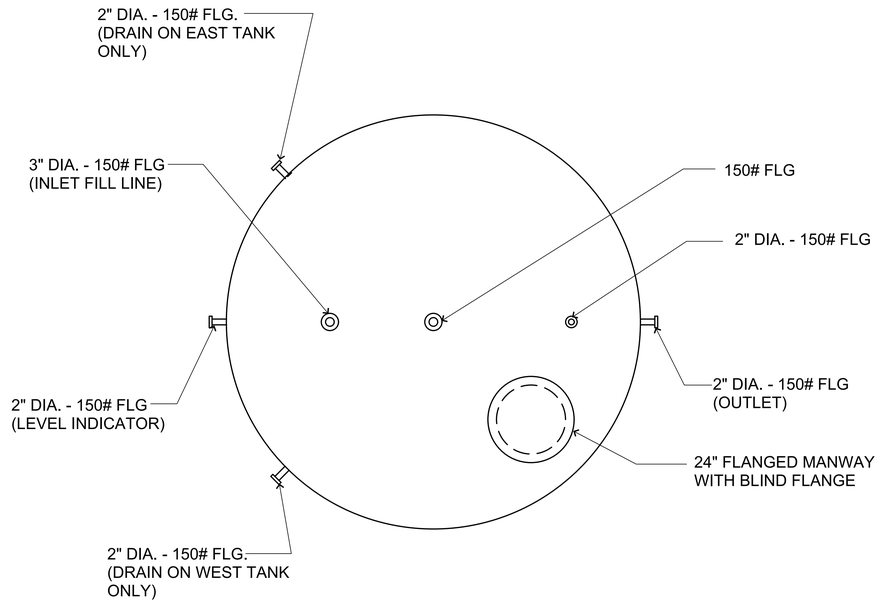

PLAN-ALUMINUM SULFATE TANK

NOT TO SCALE

SYM	REVISIONS	DATE	APPROVED

GENERAL SHEET NOTES

1. SEE SHEET G-002 FOR GENERAL NOTES
2. SEE SHEET V-001 FOR SURVEY NOTES & LEGEND
3. SULFATE TANK ELEVATION PLAN PULLED FROM RECORD DRAWINGS DATED 16 NOV 1999
4. NOZZLES DRILLED TO ANSI STD. B-16.5 FOR 15-# DRILLING & THK. RATING OF 25 PSI

A1 EXISTING SULFATE TANK ELEVATION PLAN

SCALE 3/8" = 1' - 0"

NORTH CAROLINA PROFESSIONAL SEAL 051957 ENGINEER ANDREW T. ARNOLD 7.15.24

Dewberry

Dewberry Engineers Inc.
2810 Wycliff Road
Suite 410
Raleigh, NC 27607-3073
919.881.9939
NC License No. F-0929

100% DESIGN

V-201

NRW ENGINEERING
NRW Engineering, P.C.
748 Lord Dunmore Drive, Suite 101
Virginia Beach, VA 23464-2664

DEPARTMENT OF THE NAVY — NAVAL FACILITIES ENGINEERING COMMAND

MARINE CORPS BASE
CAMP LEJEUNE, NORTH CAROLINA

DES.	ANH
DR.	JCK
CHK.	ATA
SUBMITTED BY:	JSH
DESIGN DIR.	CHRIS MAAS, PE
APPROVED: PWO OR OICC	DATE
PWO	
SATISFACTORY TO	DATE
Christopher Maas	16-Jul-2026

PROJECT 25-0087
FC444 ALUMINUM SULFATE TANK REPAIRS
EXISTING SULFATE TANK ELEVATION PLAN

SIZE	CODE IDENT.NO	NAVFAC DRAWING NO.
E1	XXXXX	60044623
		CONST. CONTR. NO. N40085-24-D-0011

SCALE: NOTED | SPEC. 25-0087 | SHEET 6 OF 25

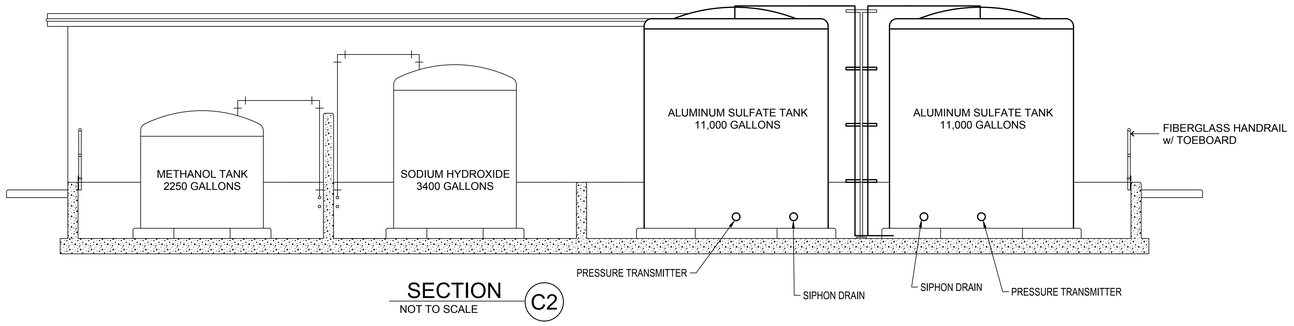

SECTION C2
NOT TO SCALE

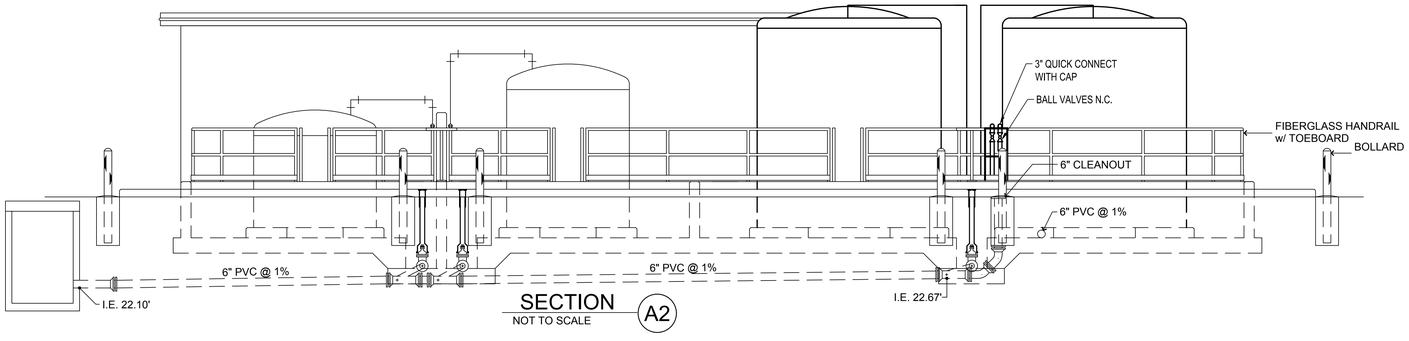

SECTION A2
NOT TO SCALE

A1 EXISTING SULFATE TANK SECTION
NOT TO SCALE

SYM	REVISIONS	DATE	APPROVED

GENERAL SHEET NOTES

1. SEE SHEET G-002 FOR GENERAL NOTES
2. SEE SHEET V-001 FOR SURVEY NOTES & LEGEND
3. SULFATE TANK SECTION PULLED FROM RECORD DRAWINGS DATED 16 NOV 1999.

GRAPHIC SCALE(S)

NORTH CAROLINA PROFESSIONAL SEAL 051957 ENGINEER ANDREW T. ARNOLD 7.15.26

Dewberry
Dewberry Engineers Inc.
2610 Wycliff Road
Suite 410
Raleigh, NC 27607-3073
919.881.9039
NC License No. F-0929

100% DESIGN

V-301

NRW ENGINEERING
NRW Engineering, P.C.
748 Lord Dunmore Drive, Suite 101
Virginia Beach, VA 23464-2964

DEPARTMENT OF THE NAVY — NAVAL FACILITIES ENGINEERING COMMAND
MARINE CORPS BASE
CAMP LEJEUNE, NORTH CAROLINA

DES.	ANH
DR.	JCK
CHK.	ATA
SUBMITTED BY:	JSH
DESIGN DIR.	CHRIS MAAS, PE
APPROVED: PWO OR OICC	DATE
PWO	
SATISFACTORY TO	DATE
Christopher Maas	16-Jul-2026

PROJECT 25-0087
FC444 ALUMINUM SULFATE TANK REPAIRS
EXISTING SULFATE TANK SECTION

SIZE	CODE IDENT.NO	NAVFAC DRAWING NO.
E1	XXXXX	60044624
		CONST. CONTR. NO. N40085-24-D-0011
SCALE: NOTED	SPEC. 25-0087	SHEET 7 OF 25

CONTRACTOR LAYDOWN AREA NOTES:

1. THE CONTRACTOR'S PERSONNEL MUST WEAR IDENTIFICATION AT ALL TIMES.
2. THE CONTRACTOR MUST HAVE AT LEAST ONE EMPLOYEE ON SITE TO RECEIVE AND DIRECT PLACEMENT OF DELIVERED MATERIALS AND SUPPLIES.
3. ACCESS TO THE CONTRACTOR'S ON-SITE STAGING AREA IS LIMITED TO NORMAL WORK HOURS : 7 A.M. TO 4:30 P.M (SUBJECT TO CHANGE), MONDAY THROUGH FRIDAY, EXCLUDING HOLIDAYS UNLESS APPROVED BY CONTRACTING OFFICER.
4. THE CONTRACTOR MUST REMOVE AND DISPOSE OF ALL DEBRIS, EXCESS SOIL AND MATERIAL, AND CONSTRUCTION DERIVED WASTES IN ACCORDANCE WITH APPLICABLE FEDERAL, STATE, LOCAL AND MCAS CHERRY POINT REGULATIONS AND REQUIREMENTS.
5. CONTRACTOR MUST RESTORE ANY AREA DAMAGED BY THE CONTRACTOR'S CONSTRUCTION OPERATIONS AND ACTIVITIES. AREAS INCLUDE BUT ARE NOT LIMITED TO CONTRACTOR LAYDOWN AREA, BATCH PLANT SITE, AND ROADS USED TO ACCESS PROJECT SITES. CONTRACTOR MUST DOCUMENT EXISTING CONDITIONS OF ALL AREAS PRIOR TO CONSTRUCTION AND ENSURE THAT CONDITION OF AREAS AFTER CONSTRUCTION IS EQUAL TO OR BETTER THAN THE PRE-CONSTRUCTION CONDITION. FINAL RESTORATION ACCEPTANCE WILL BE BY, OR AT THE DIRECTION OF, THE CONTRACTING OFFICER.
6. THE CONTRACTOR IS RESPONSIBLE FOR COORDINATING AND PROVIDING UTILITIES, AS NEEDED, FOR THE CONTRACTOR'S WORK AND THE OPERATION OF THE BATCH PLANT. SEE SPECIFICATION SECTION 01 50 00 "TEMPORARY CONSTRUCTION FACILITIES AND CONTROLS".
7. VEHICLE TIRES MUST BE WASHED PRIOR TO DRIVING OVER EXPOSED SUBGRADE MATERIAL.

EROSION AND SEDIMENT CONTROL NOTES::

1. THE NPDES CONSTRUCTION PERMIT REQUIRES EROSION CONTROL DEVICES AND STORM WATER OUTFALLS BE INSPECTED WEEKLY AND WITHIN 24 HRS OF A 1-INCH RAIN EVENT. IT WILL BE THE RESPONSIBILITY OF THE CONTRACTOR TO CONDUCT THESE INSPECTIONS AND MAINTAIN RECORDS UNTIL THE AREA HAS STABILIZED, EVIDENT BY 95% VEGETATIVE GROWTH FOR AREAS PROVIDED SEEDING. TO FACILITATE RAINFALL MONITORING A RAIN GAUGE IS REQUIRED TO BE ON SITE. ADDITIONALLY, THE CONTRACTOR IS RESPONSIBLE FOR CONDUCTING "SELF INSPECTIONS" INDICATING THE DATE BMPS ARE INSTALLED AND STABILIZATION MEASURES (SEEDING/MULCHING OR SOD) ARE INITIATED. BOTH INSPECTIONS ARE RECORDED ON THE SAME REPORT FORM AND MUST BE MAINTAINED BY THE CONTRACTOR AT THE ONSITE OFFICE. ONCE STABILIZATION HAS BEEN ACCOMPLISHED INSPECTION RECORDS ARE TO BE FORWARDED TO EAD AND ALL TEMPORARY EROSION/SEDIMENTATION CONTROL DEVICES REMOVED. THE CONTRACTOR IS RESPONSIBLE FOR MAINTAINING COMPLIANCE WITH ALL PERMITS AND PLANS, ANY CHANGES WILL BE APPROVED BY THE STATE PRIOR TO EXECUTION. A COPY OF THE EROSION AND SEDIMENTATION (ES) CONTROL PLAN, ES LETTER OF APPROVAL, NPDES CONSTRUCTION PERMIT, AND NPDES CERTIFICATE OF COVERAGE WILL BE MAINTAINED BY THE CONTRACTOR AT THE ONSITE OFFICE. IF SOIL IS REMOVED FROM OR BROUGHT ONSITE, THE APPLICABLE SOLID WASTE MANAGEMENT PERMIT NUMBER, EROSION SEDIMENTATION PERMIT NUMBER OR MINE PERMIT NUMBER WILL BE DISCLOSED.

GROUND STABILIZATION AND MATERIALS HANDLING PRACTICES FOR COMPLIANCE WITH THE NCG01 CONSTRUCTION GENERAL PERMIT

IMPLEMENTING THE DETAILS AND SPECIFICATIONS ON THIS PLAN SHEET WILL RESULT IN THE CONSTRUCTION ACTIVITY BEING CONSIDERED COMPLIANT WITH THE GROUND STABILIZATION AND MATERIALS HANDLING SECTIONS OF THE NCG01 CONSTRUCTION GENERAL PERMIT (SECTIONS E AND F, RESPECTIVELY). THE PERMITTEE SHALL COMPLY WITH THE EROSION AND SEDIMENT CONTROL PLAN APPROVED BY THE DELEGATED AUTHORITY HAVING JURISDICTION. ALL DETAILS AND SPECIFICATIONS SHOWN ON THIS SHEET MAY NOT APPLY DEPENDING ON SITE CONDITIONS AND THE DELEGATED AUTHORITY HAVING JURISDICTION.

SECTION E: GROUND STABILIZATION

Required Ground Stabilization Timeframes

Site Area Description	Stabilize within this many calendar days after ceasing land disturbance	Timeframe variations
(a) Perimeter dikes, swales, ditches, and perimeter slopes	7	
(b) High Quality Water (HQW) Zones	7	
(c) Slopes steeper than 3:1	7	If slopes are 10' or less in length and are not steeper than 2:1, 14 days are allowed
(d) Slopes 3:1 to 4:1	14	-7 days for slopes greater than 50' in length and with slopes steeper than 4:1 -7 days for perimeter dikes, swales, ditches, perimeter slopes and HQW Zones -10 days for Falls Lake Watershed
(e) Areas with slopes flatter than 4:1	14	-7 days for perimeter dikes, swales, ditches, perimeter slopes and HQW Zones -10 days for Falls Lake Watershed unless there is zero slope

Note: After the permanent cessation of construction activities, any areas with temporary ground stabilization shall be converted to permanent ground stabilization as soon as practicable but in no case longer than 90 calendar days after the last land disturbing activity. Temporary ground stabilization shall be maintained in a manner to render the surface stable against accelerated erosion until permanent ground stabilization is achieved.

GROUND STABILIZATION SPECIFICATION

STABILIZE THE GROUND SUFFICIENTLY SO THAT RAIN WILL NOT DISLODGE THE SOIL. USE ONE OF THE TECHNIQUES IN THE TABLE BELOW:

Temporary Stabilization	Permanent Stabilization
• Temporary grass seed covered with straw or other mulches and tackifiers • Hydroseeding • Rolled erosion control products with or without temporary grass seed • Appropriately applied straw or other mulch • Plastic sheeting	• Permanent grass seed covered with straw or other mulches and tackifiers • Geotextile fabrics such as permanent soil reinforcement matting • Hydroseeding • Shrubs or other permanent plantings covered with mulch • Uniform and evenly distributed ground cover sufficient to restrain erosion • Structural methods such as concrete, asphalt or retaining walls • Rolled erosion control products with grass seed

CIVIL LEGEND:

LIMITS OF DISTURBANCE — LOD — LOD —

CONSTRUCTION ENTRANCE

TEMPORARY SEDIMENT FENCE — SF —

SYM	REVISIONS	DATE	APPROVED

NORTH CAROLINA PROFESSIONAL SEAL 051957 7.15.26 ENGINEER ANDREW T. ARNOLD

Dewberry

Dewberry Engineers Inc.
2610 Wycliff Road
Suite 410
Raleigh, NC 27607-3073
919.881.9939
NC License No. F-0929

100% DESIGN

C-001

NRW ENGINEERING
NRW Engineering, P.C.
748 Lord Dunmore Drive, Suite 101
Virginia Beach, VA 23464-2664

DEPARTMENT OF THE NAVY NAVAL FACILITIES ENGINEERING COMMAND

MARINE CORPS BASE
CAMP LEJEUNE, NORTH CAROLINA

DES.	ANH
DR.	JCK
CHK.	ATA
SUBMITTED BY:	JSH
DESIGN DIR.	CHRIS MAAS, PE
APPROVED: PWO OR OICC	DATE
PWO	
SATISFACTORY TO	DATE
Christopher Maas	16-Jul-2026

PROJECT 25-0087
FC444 ALUMINUM SULFATE TANK REPAIRS
CIVIL NOTES & LEGEND

SIZE	CODE IDENT.NO	NAVFAC DRAWING NO.
E1	XXXXX	60044625

CONST. CONTR. NO. N40085-24-D-0011

SCALE: NOTED SPEC. 25-0087 SHEET 8 OF 25

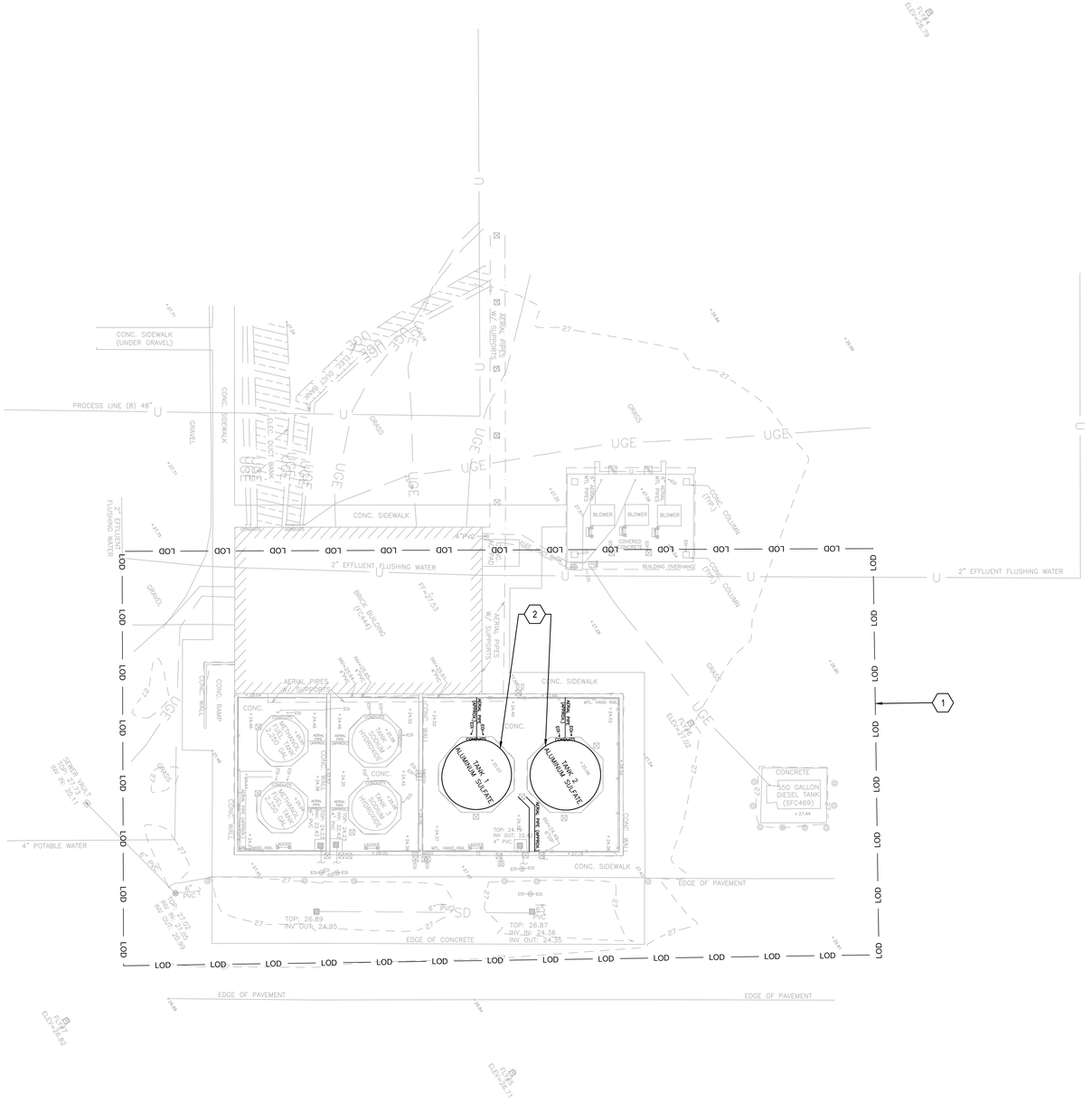

A1 DEMOLITION PLAN
NOT TO SCALE

PLAN NORTH

SYM	REVISIONS	DATE	APPROVED

GENERAL SHEET NOTES

1. SEE SHEET G-002 FOR GENERAL NOTES
2. SEE SHEET V-001 FOR SURVEY NOTES & LEGEND
3. SEE SHEET CD101 FOR ELECTRICAL DEMOLITION PLAN.
4. REMOVE AND REPLACE ALL GALVANIZED AND FERROUS METAL PIPE SUPPORTS AND CONDUIT SUPPORTS.

CONSTRUCTION KEYNOTES

1. LIMITS OF DISTURBANCE
2. DEMOLISH ALUMINUM SULFATE TANKS, ASSOCIATED PIPING AND APPURTENANCES. SEE SHEET CD111 FOR DETAILS.

GRAPHIC SCALE(S)

0 10' 20'

NORTH CAROLINA PROFESSIONAL SEAL 051957 7.15.26 ENGINEER ANDREW T. ARNOLD

Dewberry
Dewberry Engineers Inc.
2610 Wycliff Road
Suite 410
Raleigh, NC 27607-3073
919.881.9939
NC License No. F-0929

100% DESIGN

CD101

NRW ENGINEERING
NRW Engineering, P.C.
748 Lord Dunmore Drive, Suite 101
Virginia Beach, VA 23464-2664

DEPARTMENT OF THE NAVY NAVAL FACILITIES ENGINEERING COMMAND
MARINE CORPS BASE
CAMP LEJEUNE, NORTH CAROLINA

PROJECT 25-0087
FC444 ALUMINUM SULFATE TANK REPAIRS
DEMOLITION PLAN

DES.	ANH
DR.	JCK
CHK.	ATA
SUBMITTED BY:	JSH
DESIGN DIR.	CHRIS MAAS, PE
APPROVED: PWO OR OICC	DATE
PWO	
SATISFACTORY TO	DATE
Christopher Maas	16-Jul-2026

SIZE	CODE IDENT.NO	NAVFAC DRAWING NO.
E1	XXXXX	60044626
		CONST. CONTR. NO. N40085-24-D-0011
SCALE: NOTED	SPEC. 25-0087	SHEET 9 OF 25

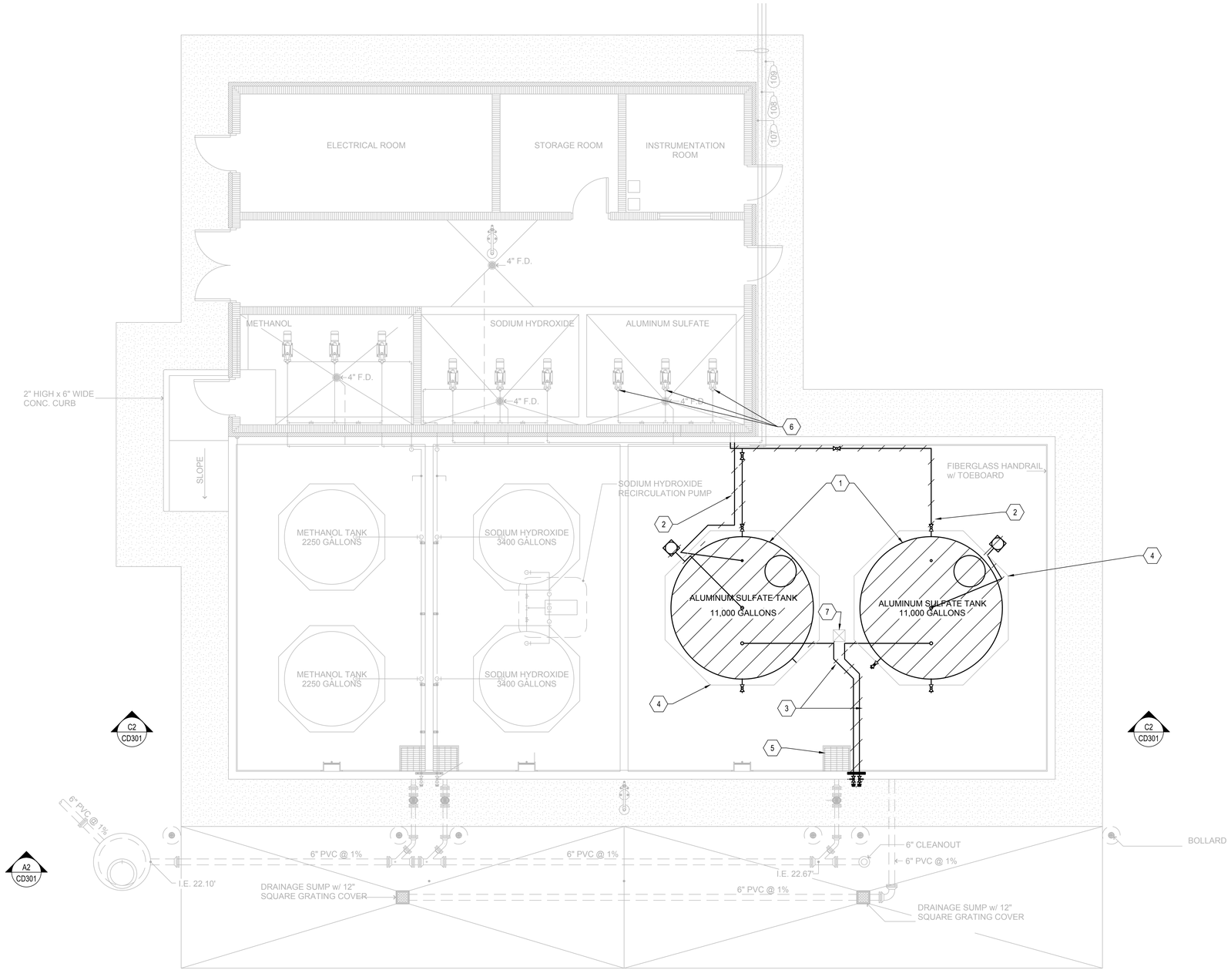

A1 ENLARGED SULFATE TANK DEMOLITION PLAN

NOT TO SCALE

PLAN NORTH

SYM	REVISIONS	DATE	APPROVED

GENERAL SHEET NOTES

1. SEE SHEET G-002 FOR GENERAL NOTES
2. SEE SHEET V-001 FOR SURVEY NOTES & LEGEND
3. SEE SHEET C-001 FOR CIVIL NOTES & LEGEND
4. REMOVE AND REPLACE ALL GALVANIZED AND FERROUS METAL PIPE SUPPORTS AND CONDUIT SUPPORTS.

CONSTRUCTION KEYNOTES

1. DEMOLISH AND REMOVE ALUMINUM SULFATE TANK.
2. DEMOLISH ALUMINUM SULFATE PUMP SUCTION LINE AND DISCHARGE LINES TO WITHIN 12-INCHES OF FACE OF WALL.
3. DEMOLISH ALUMINUM SULFATE TANK FILL LINE.
4. PROTECT EXISTING CONCRETE PAD.
5. PROTECT EXISTING INLET.
6. REMOVE PRESSURE GAUGES ON ALUMINUM SULFATE FEED PUMPS.
7. SANDBLAST PIPE SUPPORT PER SPECIFICATION 09 66 00. DEMOLISH EXISTING UNISTRUTS.

GRAPHIC SCALE(S)

NORTH CAROLINA PROFESSIONAL SEAL 051957 7.15.26 ENGINEER ANDREW T. ARNOLD

Dewberry
Dewberry Engineers Inc.
2610 Wycliff Road
Suite 410
Raleigh, NC 27607-3073
919.881.9939
NC License No. F-0929

100% DESIGN

CD111

NRW ENGINEERING
NRW Engineering, P.C.
748 Lord Dunmore Drive, Suite 101
Virginia Beach, VA 23464-2664

DEPARTMENT OF THE NAVY — NAVAL FACILITIES ENGINEERING COMMAND
MARINE CORPS BASE
CAMP LEJEUNE, NORTH CAROLINA

DES.	ANH
DR.	JCK
CHK.	ATA
SUBMITTED BY:	JSH
DESIGN DIR.	CHRIS MAAS, PE
APPROVED: PWO OR OICC	DATE
PWO	
SATISFACTORY TO	DATE
Christopher Maas	16-Jul-2026

PROJECT 25-0087
FC444 ALUMINUM SULFATE TANK REPAIRS
ENLARGED SULFATE TANK DEMOLITION PLAN

SIZE	CODE IDENT.NO	NAVFAC DRAWING NO.
E1	XXXXX	60044627
		CONST. CONTR. NO. N40085-24-D-0011

SCALE: NOTED | SPEC. 25-0087 | SHEET 10 OF 25

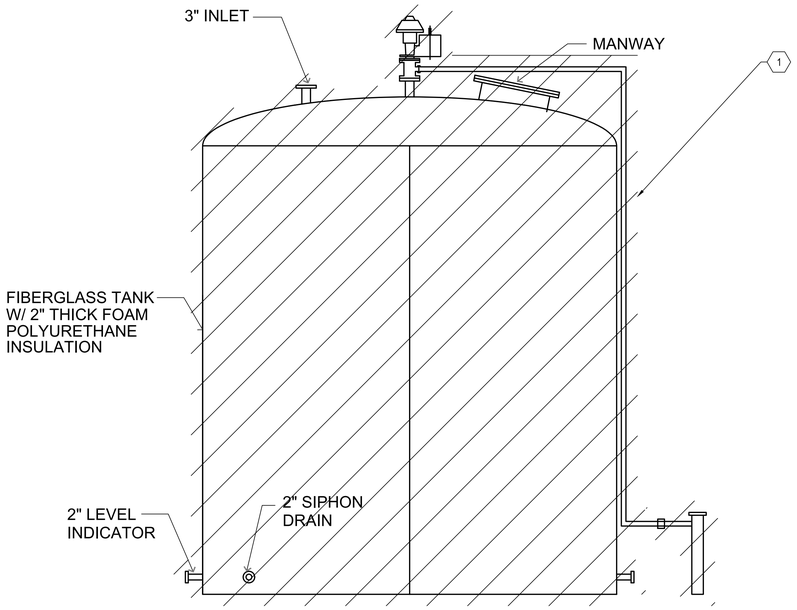

ELEVATION

NOT TO SCALE

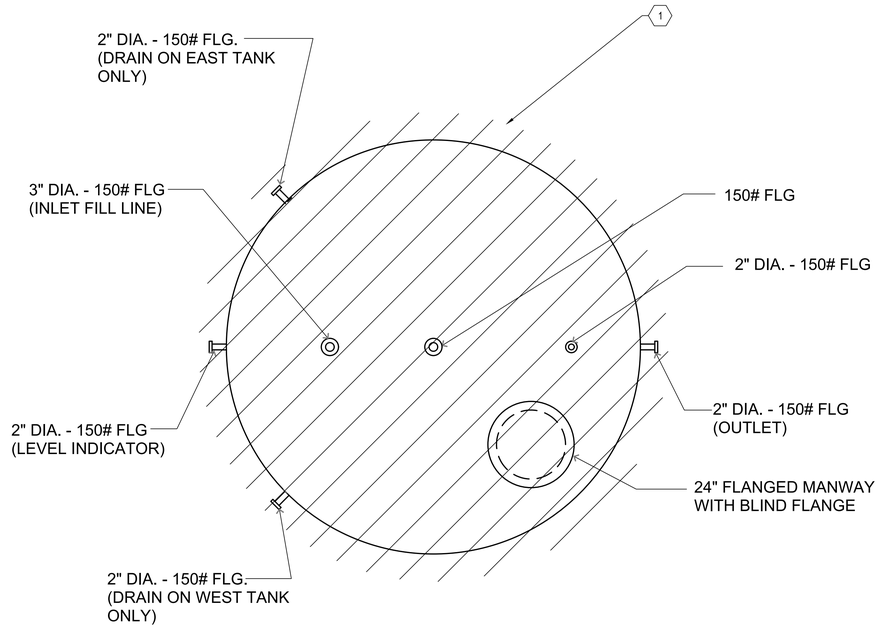

PLAN-ALUMINUM SULFATE TANK

NOT TO SCALE

A1 SULFATE TANK DEMOLITION ELEVATION PLAN

NOT TO SCALE

SYM	REVISIONS	DATE	APPROVED

GENERAL SHEET NOTES

1. SEE SHEET G-002 FOR GENERAL NOTES
2. SEE SHEET V-001 FOR SURVEY NOTES & LEGEND

CONSTRUCTION KEYNOTES

1 DEMOLISH AND REMOVE SULFATE TANK, PIPING, AND APPURTENANCES.

GRAPHIC SCALE(S)

NORTH CAROLINA PROFESSIONAL SEAL 051957 7.15.26 ENGINEER ANDREW T. ARNOLD

Dewberry

Dewberry Engineers Inc.
2610 Wycliff Road
Suite 410
Raleigh, NC 27607-3073
919.881.9939
NC License No. F-0929

100% DESIGN

CD201

NRW ENGINEERING
NRW Engineering, P.C.
748 Lord Dunmore Drive, Suite 101
Virginia Beach, VA 23464-2664

DEPARTMENT OF THE NAVY — NAVAL FACILITIES ENGINEERING COMMAND
MARINE CORPS BASE
CAMP LEJEUNE, NORTH CAROLINA

DES.	ANH
DR.	JCK
CHK.	ATA
SUBMITTED BY:	JSH
DESIGN DIR.	CHRIS MAAS, PE
APPROVED: PWO OR OICC	DATE
PWO	
SATISFACTORY TO	DATE
Christopher Maas	16-Jul-2026

PROJECT 25-0087
FC444 ALUMINUM SULFATE TANK REPAIRS
SULFATE TANK DEMOLITION ELEVATION PLAN

SIZE	CODE IDENT.NO	NAVFAC DRAWING NO.
E1	XXXXX	60044628
		CONST. CONTR. NO. N40085-24-D-0011
SCALE: NOTED	SPEC. 25-0087	SHEET 11 OF 25

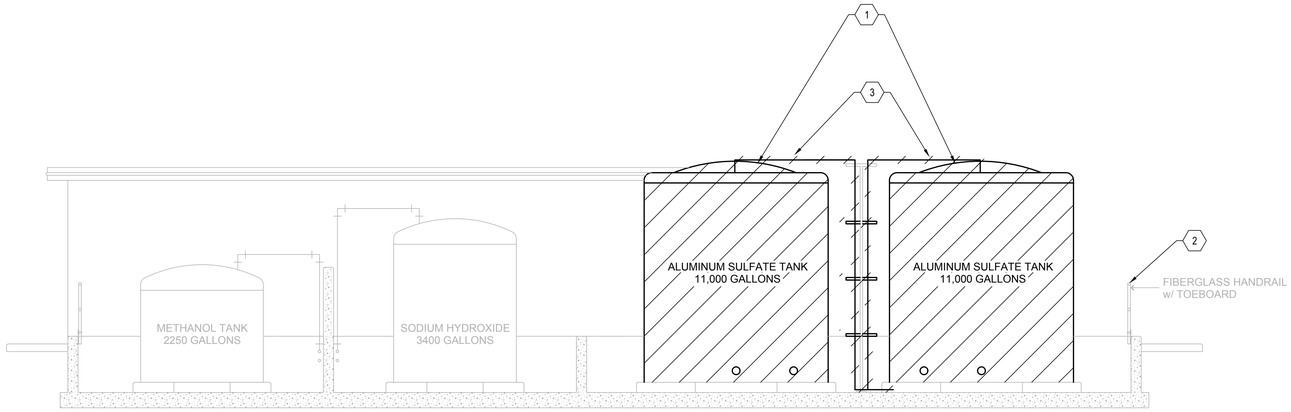

SECTION C2
NOT TO SCALE

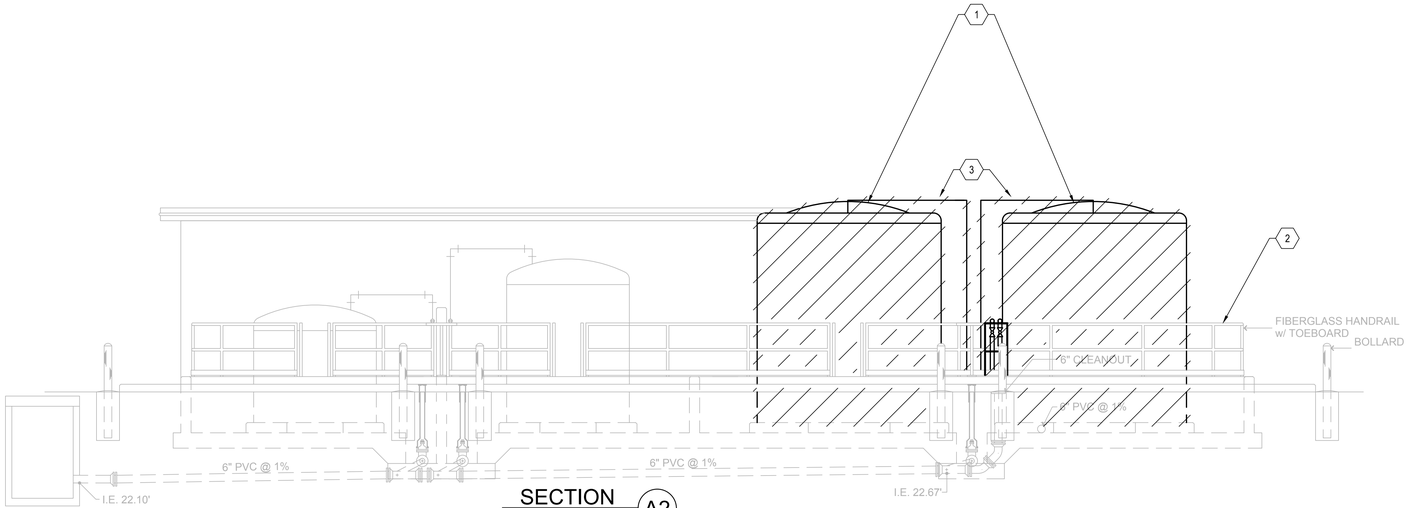

SECTION A2
NOT TO SCALE

A1 SULFATE TANK DEMOLITION SECTION
NOT TO SCALE

SYM	REVISIONS	DATE	APPROVED

GENERAL SHEET NOTES

1. SEE SHEET G-002 FOR GENERAL NOTES
2. SEE SHEET V-001 FOR SURVEY NOTES & LEGEND
3. REMOVE AND REPLACE ALL GALVANIZED AND FERROUS METAL PIPE SUPPORTS AND CONDUIT SUPPORTS.

CONSTRUCTION KEYNOTES

1. DEMOLISH ALUMINUM SULFATE TANK.
2. PROTECT FIBERGLASS HANDRAIL W/ TOEBOARD
3. DEMOLISH 3" ALUMINUM SULFATE TANK FILL LINE.

GRAPHIC SCALE(S)

NORTH CAROLINA PROFESSIONAL SEAL 051957 7.15.26 ENGINEER ANDREW T. ARNOLD

Dewberry
Dewberry Engineers Inc.
2610 Wycliff Road
Suite 410
Raleigh, NC 27607-3073
919.881.9939
NC License No. F-0929

100% DESIGN

CD301

NRW ENGINEERING
NRW Engineering, P.C.
748 Lord Dunmore Drive, Suite 101
Virginia Beach, VA 23464-2664

DEPARTMENT OF THE NAVY NAVAL FACILITIES ENGINEERING COMMAND
MARINE CORPS BASE
CAMP LEJEUNE, NORTH CAROLINA

DES.	ANH
DR.	JCK
CHK.	ATA
SUBMITTED BY:	JSH
DESIGN DIR.	CHRIS MAAS, PE
APPROVED: PWO OR OICC	DATE
PWO	
SATISFACTORY TO:	DATE
Christopher Maas	16-Jul-2026

PROJECT 25-0087
FC444 ALUMINUM SULFATE TANK REPAIRS
SULFATE TANK DEMOLITION SECTION

SIZE	CODE IDENT.NO	NAVFAC DRAWING NO.
E1	XXXXX	60044629
		CONST. CONTR. NO. N40085-24-D-0011
SCALE: NOTED	SPEC. 25-0087	SHEET 12 OF 25

SYM	REVISIONS	DATE	APPROVED

GENERAL SHEET NOTES

1. SEE SHEET G-002 FOR GENERAL NOTES
2. SEE SHEET V-001 FOR SURVEY NOTES & LEGEND
3. SEE SHEET C-001 FOR CIVIL NOTES & LEGEND
4. REPLACE DEMOLISHED PIPE FITTINGS, BENDS, VALVES, AND FLANGES.
5. PROVIDE NEW STAINLESS STEEL PIPE AND CONDUIT SUPPORTS TO BE INSTALLED IN LIKE LOCATIONS OF REMOVED PIPE AND CONDUIT SUPPORTS.

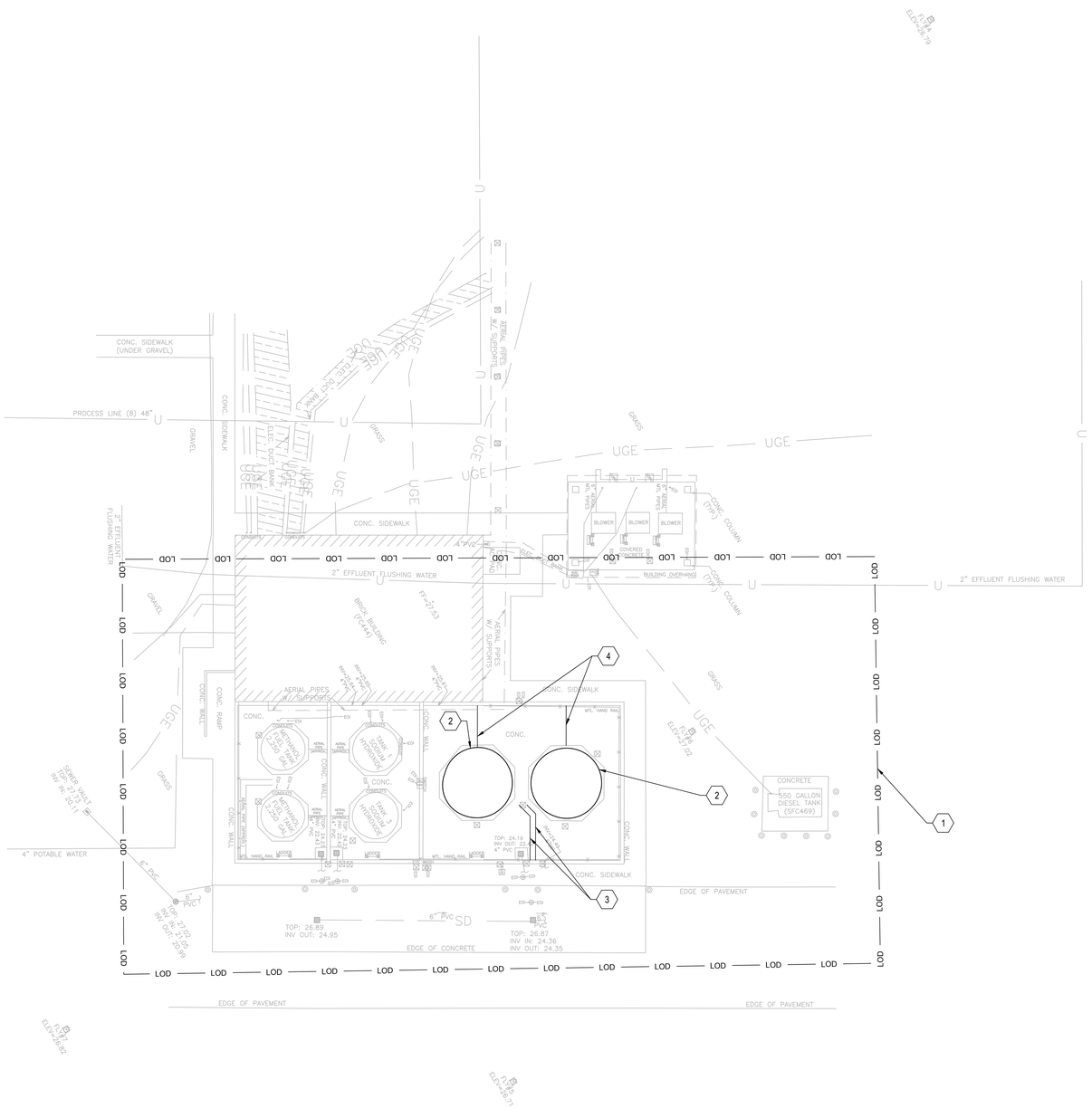

CONSTRUCTION KEYNOTES

1. LIMITS OF DISTURBANCE
2. PROVIDE 11,000 GALLON ALUMINUM SULFATE TANK. SEE SHEET CU201 FOR DETAILS.
3. PROVIDE 3" CPVC ALUMINUM SULFATE TANK FILL LINE. MATCH ALIGNMENT OF EXISTING SULFATE TANK FILL LINE. SEE SHEET CU111.
4. PROVIDE 2" CPVC ALUMINUM SULFATE PUMP SUCTION LINE. MATCH ALIGNMENT OF EXISTING SULFATE PUMP SUCTION LINE. SEE SHEET CU111.

GRAPHIC SCALE(S)

0 10' 20'

A1 SITE PLAN
SCALE 1" = 10'

PLAN NORTH

NORTH CAROLINA PROFESSIONAL SEAL 051957 7.15.26 ENGINEER ANDREW T. ARNOLD

Dewberry
Dewberry Engineers Inc.
2610 Wycliff Road
Suite 410
Raleigh, NC 27607-3073
919.881.9939
NC License No. F-0929

100% DESIGN

CS101

NRW ENGINEERING
NRW Engineering, P.C.
748 Lord Dunmore Drive, Suite 101
Virginia Beach, VA 23464-2664

DEPARTMENT OF THE NAVY NAVAL FACILITIES ENGINEERING COMMAND
MARINE CORPS BASE
CAMP LEJEUNE, NORTH CAROLINA

DES.	ANH
DR.	JCK
CHK.	ATA
SUBMITTED BY:	JSH
DESIGN DIR.	CHRIS MAAS, PE
APPROVED: PWO OR OICC	DATE
PWO	
SATISFACTORY TO	DATE
Christopher Maas	16-Jul-2026

PROJECT 25-0087
FC444 ALUMINUM SULFATE TANK REPAIRS
SITE PLAN

SIZE	CODE IDENT.NO	NAVFAC DRAWING NO.
E1	XXXXX	60044630
		CONST. CONTR. NO. N40085-24-D-0011
SCALE: NOTED	SPEC. 25-0087	SHEET 13 OF 25

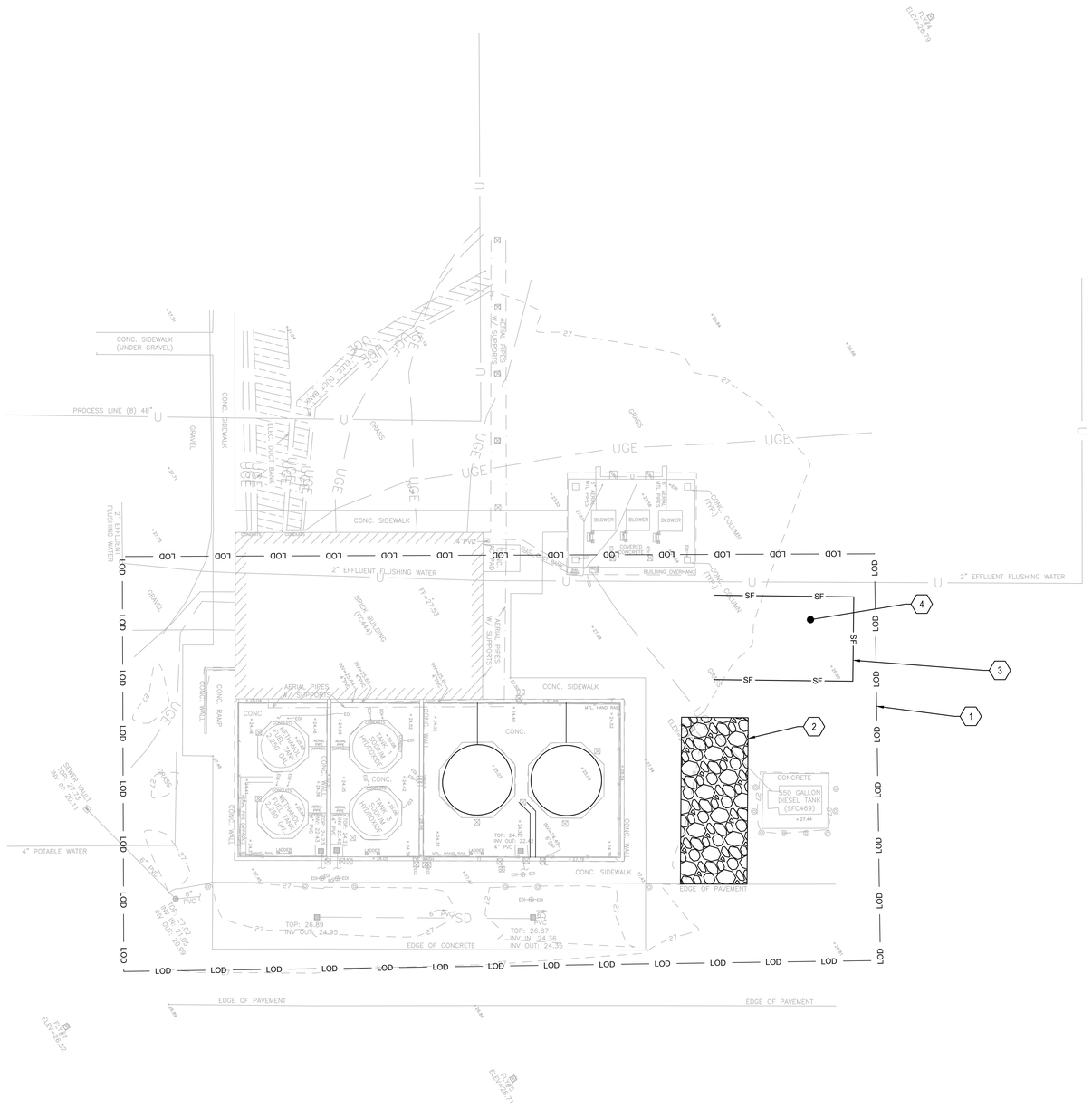

A1 GRADING & EROSION CONTROL PLAN

SCALE 1" = 10'

PLAN NORTH

SYM	REVISIONS	DATE	APPROVED

GENERAL SHEET NOTES

1. SEE SHEET G-002 FOR GENERAL NOTES
2. SEE SHEET V-001 FOR SURVEY NOTES & LEGEND

CONSTRUCTION KEYNOTES

1. LIMITS OF DISTURBANCE
2. PROVIDE TEMPORARY CONSTRUCTION ENTRANCE. SEE SHEET A1/C-501
3. PROVIDE TEMPORARY SILT FENCE. SEE SHEET C1/C-501
4. STOCKPILE AREA

GRAPHIC SCALE(S)

0 10' 20'

NORTH CAROLINA PROFESSIONAL SEAL 051957 7.15.26 ENGINEER ANDREW T. ARNOLD

Dewberry
Dewberry Engineers Inc.
2610 Wycliff Road
Suite 410
Raleigh, NC 27607-3073
919.881.9939
NC License No. F-0929

100% DESIGN

CG101

NRW ENGINEERING
NRW Engineering, P.C.
748 Lord Dunmore Drive, Suite 101
Virginia Beach, VA 23464-2664

DEPARTMENT OF THE NAVY NAVAL FACILITIES ENGINEERING COMMAND
MARINE CORPS BASE
CAMP LEJEUNE, NORTH CAROLINA

DES.	ANH
DR.	JCK
CHK.	ATA
SUBMITTED BY:	JSH
DESIGN DIR.	CHRIS MAAS, PE
APPROVED: PWO OR OICC	DATE
PWO	
SATISFACTORY TO	DATE
Christopher Maas	16-Jul-2026

PROJECT 25-0087
FC444 ALUMINUM SULFATE TANK REPAIRS
GRADING & EROSION CONTROL PLAN

SIZE	CODE IDENT.NO	NAVFAC DRAWING NO.
E1	XXXXX	60044631
		CONST. CONTR. NO. N40085-24-D-0011

SCALE: NOTED SPEC. 25-0087 SHEET 14 OF 25

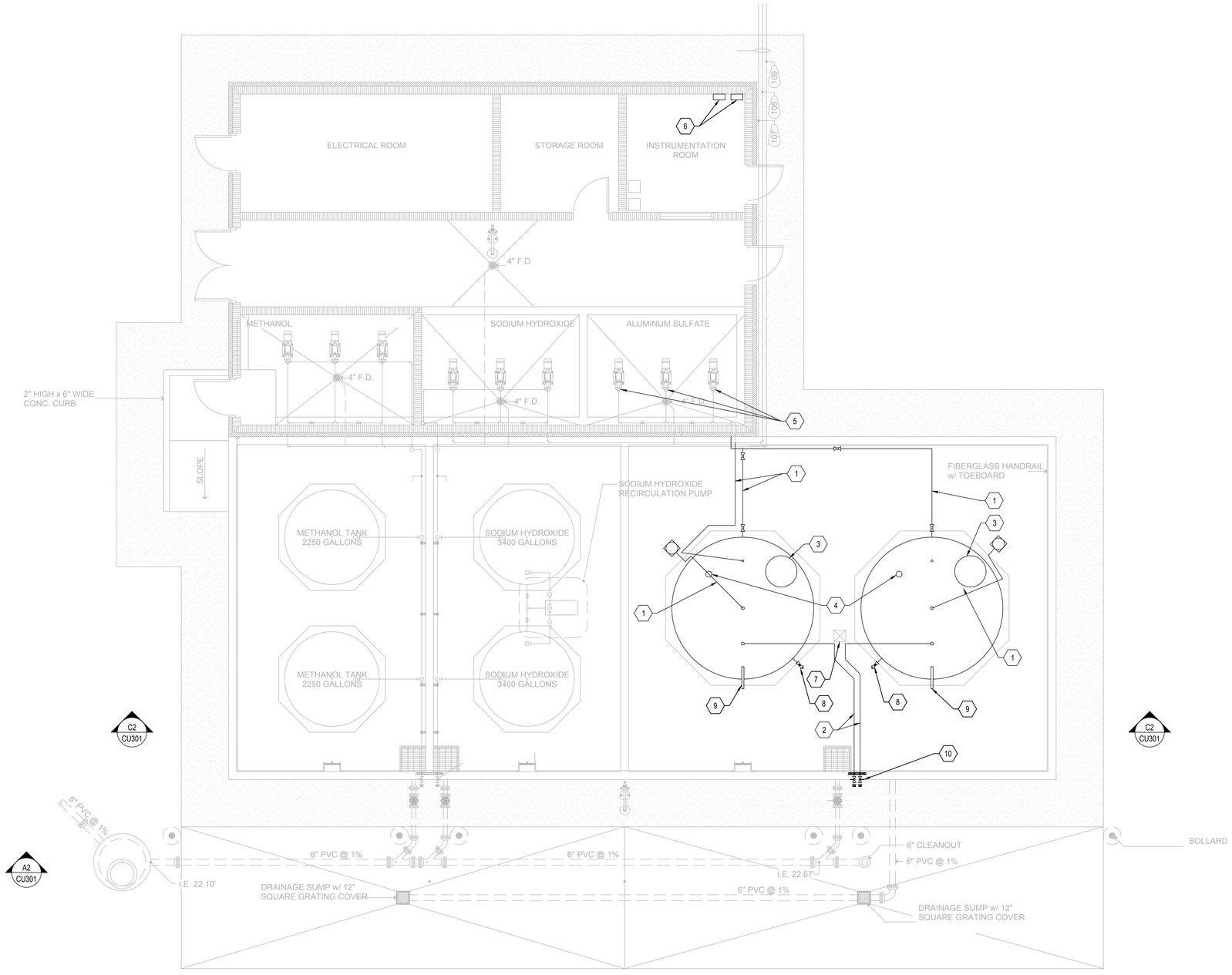

A1 ENLARGED SULFATE TANK PLAN

NOT TO SCALE

PLAN NORTH

SYM	REVISIONS	DATE	APPROVED

GENERAL SHEET NOTES

1. SEE SHEET G-002 FOR GENERAL NOTES
2. SEE SHEET V-001 FOR SURVEY NOTES & LEGEND
3. PROVIDE NEW STAINLESS STEEL PIPE AND CONDUIT SUPPORTS TO BE INSTALLED IN LIKE LOCATIONS OF REMOVED PIPE AND CONDUIT SUPPORTS.
4. ALL CHEMICAL PIPE FITTINGS TO BE SOLVENT WELDED. TRUE UNION AND THREADED FITTINGS ARE NOT ALLOWED.

CONSTRUCTION KEYNOTES

1. PROVIDE 2" SCH. 80 CPVC. MATCH EXISTING ALIGNMENT. PROVIDE TIE-IN TO EXISTING WALL PENETRATIONS WITH SOLVENT WELDED FITTINGS.
2. PROVIDE 3" CPVC FILL LINE. MATCH EXISTING ALIGNMENT.
3. PROVIDE 24" MANWAY
4. PROVIDE ULTRASONIC LEVEL DEVICE W/ 6" DIAMETER FLANGED OUTLET
5. REPLACE PRESSURE GAUGES ON ALUMINUM SULFATE FEED PUMPS. CONTRACTOR TO FIELD VERIFY CONNECTION SIZE PRIOR TO ORDERING.
6. PROVIDE LEVEL TRANSMITTER (TYP. OF 2). COORDINATE INSTALLATION LOCATION WITH OPERATIONS STAFF.
7. PIPE SUPPORT TO BE SANDBLASTED AND COATED WITH HIGH PERFORMANCE COATING PER SPECIFICATION 09 66 00. PROVIDE STAINLESS STEEL UNISTRUTS, U BOLTS, AND NUTS IN LIKE LOCATION OF EXISTING UNISTRUTS.
8. PROVIDE 2" BALL VALVES.
9. PROVIDE REVERSE LEVEL FLOAT SYSTEM WITH REVERSE LEVEL CALIBRATION BOARD MOUNTED TO EXTERIOR TANK WALL.
10. PROVIDE 3" QUICK CONNECTS WITH CAPS, 3" ALL VALVES, AND PIPE RACK. SEE SHEET CU301.

GRAPHIC SCALE(S)

NORTH CAROLINA PROFESSIONAL SEAL 051957 ENGINEER ANDREW T. ARNOLD 7.15.26

Dewberry
Dewberry Engineers Inc.
2610 Wycliff Road
Suite 410
Raleigh, NC 27607-3073
919.881.9039
NC License No. F-0929

100% DESIGN

CU111

NRW ENGINEERING
NRW Engineering, P.C.
748 Lord Dunmore Drive, Suite 101
Virginia Beach, VA 23464-2964

DEPARTMENT OF THE NAVY — NAVAL FACILITIES ENGINEERING COMMAND

MARINE CORPS BASE
CAMP LEJEUNE, NORTH CAROLINA

PROJECT 25-0087
FC444 ALUMINUM SULFATE TANK REPAIRS
ENLARGED SULFATE TANK PLAN

DES.	ANH
DR.	JCK
CHK.	ATA
SUBMITTED BY:	JSH
DESIGN DIR.	CHRIS MAAS, PE
APPROVED: PWO OR OICC	DATE
PWO	
SATISFACTORY TO	DATE
Christopher Maas	16-Jul-2026

SIZE	CODE IDENT.NO	NAVFAC DRAWING NO.
E1	XXXXX	60044632
		CONST. CONTR. NO. N40085-24-D-0011
SCALE: NOTED	SPEC. 25-0087	SHEET 15 OF 25

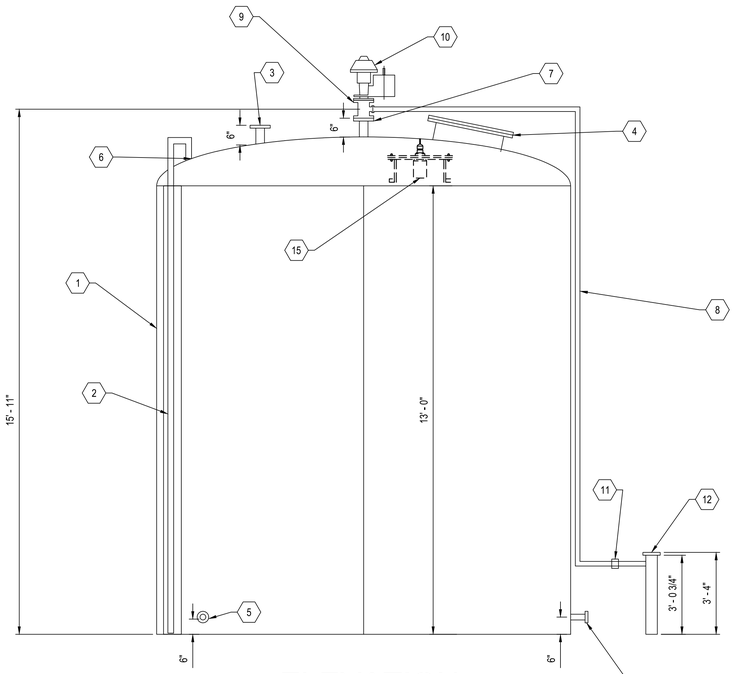

ELEVATION
NOT TO SCALE

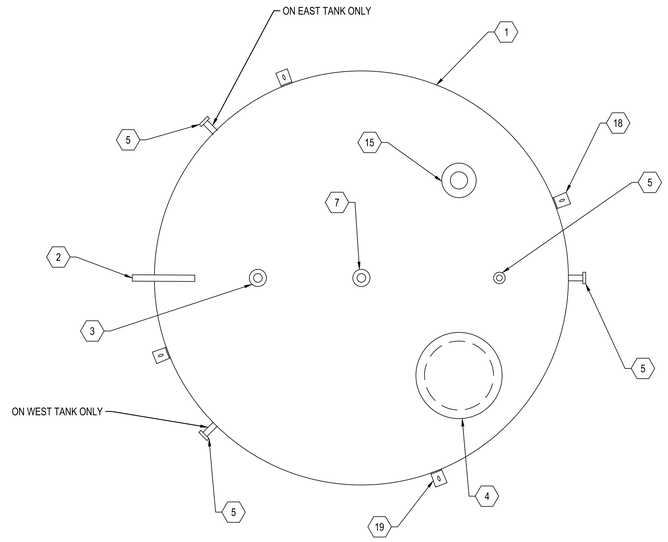

PLAN-ALUMINUM SULFATE TANK
NOT TO SCALE

B1 SULFATE TANK ELEVATION PLAN
NOT TO SCALE

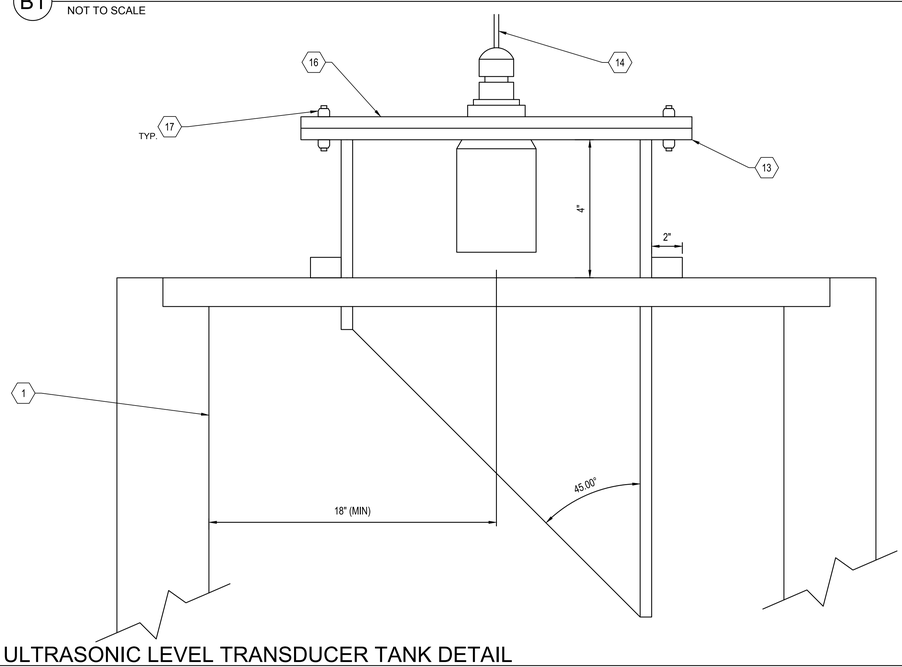

A1 ULTRASONIC LEVEL TRANSDUCER TANK DETAIL
NOT TO SCALE

SYM	REVISIONS	DATE	APPROVED

GENERAL SHEET NOTES

1. SEE SHEET G-002 FOR GENERAL NOTES
2. SEE SHEET V-001 FOR SURVEY NOTES & LEGEND
3. ASSUME CIRCULAR MEASUREMENTS ARE DIAMETER UNLESS NOTED OTHERWISE
4. TANKS, PIPING, AND APPURTENANCES ARE SHOWN FOR CLARITY, REFERENCE PLAN VIEW FOR ORIENTATION
5. NOZZLES DRILLED TO ANSI STD. B-16.5 FOR 150# DRILLING & THK. RATING OF 25 PSI

CONSTRUCTION KEYNOTES

1. PROVIDE FIBERGLASS TANK W/ 2" THICK FOAM POLYURETHANE INSULATION.
2. PROVIDE REVERSE LEVEL FLOAT SYSTEM WITH REVERSE LEVEL CALIBRATION BOARD MOUNTED TO EXTERIOR TANK WALL.
3. PROVIDE 3" 150# FLG. INLET
4. PROVIDE 24" MANWAY.
5. PROVIDE 2" 150# FLG. OUTLET.
6. PROVIDE ASME FLANGED AND DISH HEAD 5/16" THK.
7. PROVIDE 3" 150# FLG. VENT CONNECTION.
8. PROVIDE 2" SCH. 80 CPVC PIPE.
9. PROVIDE 3"X3"X3" SCH. 80 CPVC TEE W/ 3" TO 2" REDUCING BUSHING
10. PROVIDE END-OF-LINE PRESSURE/VACUUM CONSERVATION VENT.
11. PROVIDE CPVC UNION.
12. PROVIDE AIR DRYER AND DESICCANT BASKET.
13. PROVIDE 6" 150# FLG.
14. PROVIDE SENSOR CABLE TO LEVEL TRANSMITTER.
15. PROVIDE ULTRASONIC LEVEL TRANSDUCER MOUNTED TO BLIND FLANGE WITH LOCK NUTS ON BOTH SIDES OF FLANGE. SEE DETAIL THIS SHEET.
16. PROVIDE BLIND FLANGE.
17. PROVIDE PVC FASTENING HARDWARE.
18. PROVIDE (4) STAINLESS STEEL HOLD DOWN LUGS APPROXIMATELY 90° APART WITH DOG CLIPS. CONTRACTOR TO UTILIZE EXISTING ANCHOR BOLTS IN PLACE. FIELD VERIFY LOCATION AND ORIENTATION OF EXISTING BOLTS PRIOR TO TANK FABRICATION FOR ORIENTATION.
19. PROVIDE (2) STAINLESS STEEL LIFTING LUGS APPROXIMATELY 180° APART.

GRAPHIC SCALE(S)

NORTH CAROLINA PROFESSIONAL SEAL 051957 ENGINEER ANDREW T. ARNOLD 7.15.26

Dewberry
Dewberry Engineers Inc.
2610 Wycliff Road
Suite 410
Raleigh, NC 27607-3073
919.881.9939
NC License No. F-0929

100% DESIGN

CU201

NRW ENGINEERING
NRW Engineering, P.C.
748 Lord Dunmore Drive, Suite 101
Virginia Beach, VA 23464-2664

DEPARTMENT OF THE NAVY — NAVAL FACILITIES ENGINEERING COMMAND
MARINE CORPS BASE
CAMP LEJEUNE, NORTH CAROLINA

DES.	ANH
DR.	JCK
CHK.	ATA
SUBMITTED BY:	JSH
DESIGN DIR.	CHRIS MAAS, PE
APPROVED: PWO OR OICC	DATE
PWO	
SATISFACTORY TO	DATE
Christopher Maas	16-Jul-2026

PROJECT 25-0087
FC444 ALUMINUM SULFATE TANK REPAIRS
SULFATE TANK ELEVATION PLAN

SIZE	CODE IDENT.NO	NAVFAC DRAWING NO.
E1	XXXXX	60044633
		CONST. CONTR. NO. N40085-24-D-0011
SCALE: NOTED	SPEC. 25-0087	SHEET 16 OF 25

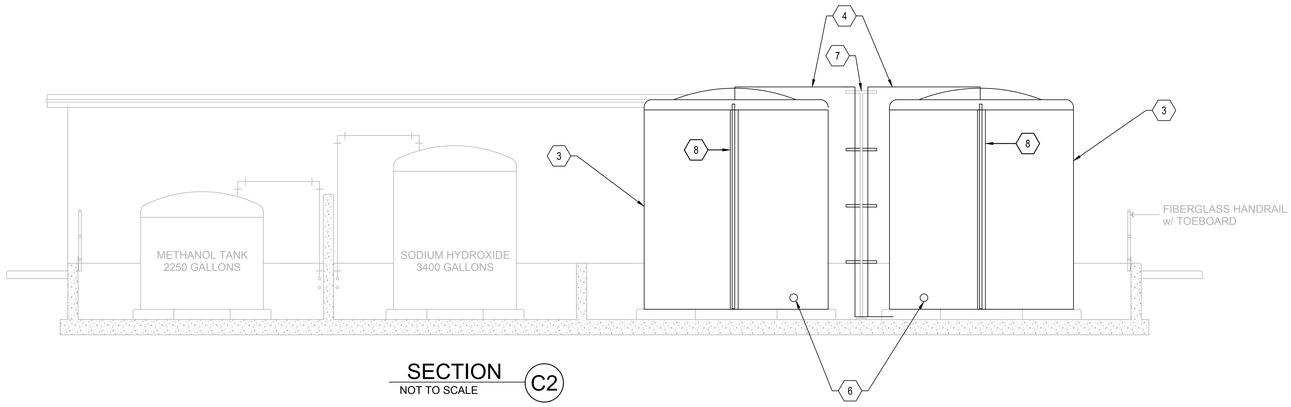

SECTION C2
NOT TO SCALE

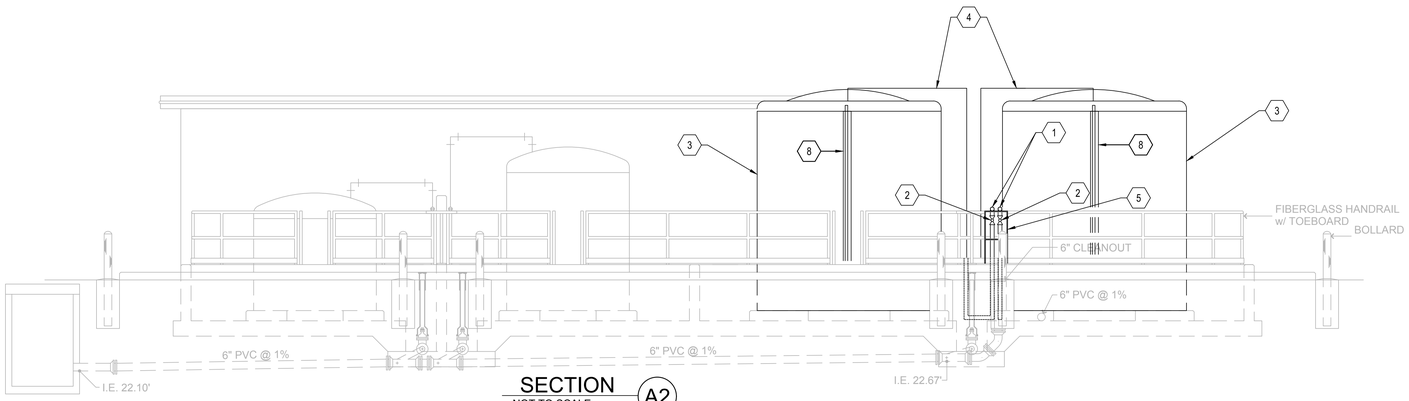

SECTION A2
NOT TO SCALE

A1 SULFATE TANK SECTION
NOT TO SCALE

PLAN NORTH

SYM	REVISIONS	DATE	APPROVED

GENERAL SHEET NOTES

1. SEE SHEET G-002 FOR GENERAL NOTES
2. SEE SHEET V-001 FOR SURVEY NOTES & LEGEND
3. PROVIDE NEW STAINLESS STEEL PIPE AND CONDUIT SUPPORTS TO BE INSTALLED IN LIKE LOCATIONS OF REMOVED PIPE AND CONDUIT SUPPORTS.
4. CONTRACTOR TO COORDINATE QUICK CONNECT CAP WITH OPERATIONS REGARDING COMPATIBILITY TO THE EXISTING CHEMICAL SUPPLIERS EQUIPMENT.

CONSTRUCTION KEYNOTES

1. PROVIDE 3" QUICK CONNECT W/ CAP
2. PROVIDE 3" BALL VALVE
3. PROVIDE FIBERGLASS ALUMINUM SULFATE TANK WITH INTEGRAL HEAT TRACING
4. PROVIDE 3" CPVC FILL LINE
5. PROVIDE S.S. PIPE RACK
6. PROVIDE 2" 150# FLG DRAIN
7. PIPE SUPPORT TO BE SANDBLASTED AND COATED WITH HIGH PERFORMANCE COATING. PROVIDE STAINLESS STEEL UNISTRUTS IN LIKE LOCATION OF EXISTING UNISTRUTS.
8. PROVIDE REVERSE LEVEL FLOAT SYSTEM WITH REVERSE LEVEL CALIBRATION BOARD MOUNTED TO EXTERIOR TANK WALL.

GRAPHIC SCALE(S)

NORTH CAROLINA PROFESSIONAL SEAL 051957 7-15-24 ENGINEER ANDREW T. ARNOLD

Dewberry
Dewberry Engineers Inc.
2610 Wycliff Road
Suite 410
Raleigh, NC 27607-3073
919.881.9939
NC License No. F-0929

100% DESIGN

CU301

NRW ENGINEERING
NRW Engineering, P.C.
748 Lord Dunmore Drive, Suite 101
Virginia Beach, VA 23464-2664

DEPARTMENT OF THE NAVY — NAVAL FACILITIES ENGINEERING COMMAND
MARINE CORPS BASE
CAMP LEJEUNE, NORTH CAROLINA

DES.	ANH
DR.	JCK
CHK.	ATA
SUBMITTED BY:	JSH
DESIGN DIR.	CHRIS MAAS, PE
APPROVED: PWO OR OICC	DATE
PWO	
SATISFACTORY TO:	DATE
Christopher Maas	16-Jul-2026

PROJECT 25-0087
FC444 ALUMINUM SULFATE TANK REPAIRS
SULFATE TANK SECTION

SIZE	CODE IDENT.NO	NAVFAC DRAWING NO.
E1	XXXXX	60044634
		CONST. CONTR. NO. N40085-24-D-0011
SCALE: NOTED	SPEC. 25-0087	SHEET 17 OF 25

SYM	REVISIONS	DATE	APPROVED

SEDIMENT FENCE MAXIMUMS		
SLOPE	SLOPE LEN.(FT)	AREA (SF)
<2%	100	10,000
2 to 5%	75	7,500
5 to 10%	50	5,000
10 to 20%	25	2,500
>20%	15	1,500

MAINTENANCE:
1. INSPECT ALL MEASURES AT LEAST WEEKLY AND AFTER EACH RAINFALL OF 1.0 INCH OR GREATER. MAKE ANY REQUIRED REPAIRS IMMEDIATELY.
2. SHOULD THE FABRIC OF A SEDIMENT FENCE COLLAPSE, TEAR, DECOMPOSE, OR BECOME INEFFECTIVE, REPLACE IT PROMPTLY.
3. REMOVE SEDIMENT DEPOSITS AS NECESSARY TO PROVIDE ADEQUATE STORAGE VOLUME FOR THE NEXT RAIN AND REDUCE PRESSURE ON THE FENCE. TAKE CARE TO AVOID UNDERMINING THE FENCE DURING CLEANOUTS.
4. REMOVE ALL FENCING MATERIALS AND UNSTABLE SEDIMENT DEPOSITS AND BRING THE AREA TO GRADE AND STABILIZE IT AFTER THE CONTRIBUTING DRAINAGE AREA HAS BEEN PROPERLY STABILIZED.

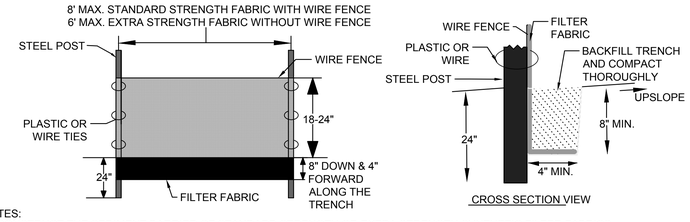

NOTES:
1. CONSTRUCT THE SEDIMENT BARRIER OF STANDARD STRENGTH OR EXTRA STRENGTH SYNTHETIC FILTER FABRICS.
2. ENSURE THAT THE HEIGHT OF THE SEDIMENT FENCE DOES NOT EXCEED 24 INCHES ABOVE THE GROUND. (HIGHER FENCES MAY IMPOUND VOLUMES OF WATER SUFFICIENT TO CAUSE FAILURE OF THE STRUCTURE)
3. CONSTRUCT THE FILTER FABRIC FROM A CONTINUOUS ROLL CUT TO THE LENGTH OF THE BARRIER TO AVOID JOINTS. WHEN JOINTS ARE NECESSARY, SECURELY FASTEN THE FILTER CLOTH ONLY AT A SUPPORT POST WITH 4 FEET MINIMUM OVERLAP TO THE NEXT POST.
4. SUPPORT STANDARD STRENGTH FILTER FABRIC BY WIRE MESH FASTENED SECURELY TO THE UPSLOPE SIDE OF THE POSTS. EXTEND THE WIRE MESH SUPPORT TO THE BOTTOM OF THE TRENCH. FASTEN THE WIRE REINFORCEMENT, THEN FABRIC ON THE UPSLOPE SIDE OF THE FENCE POST. WIRE OR PLASTIC ZIP TIES SHOULD HAVE A MINIMUM 50 POUND TENSILE STRENGTH.
5. WHEN A WIRE MESH SUPPORT FENCE IS USED, SPACE POSTS A MAXIMUM OF 8 FEET APART. SUPPORTS SHOULD BE DRIVEN SECURELY INTO THE GROUND A MINIMUM OF 24 INCHES. WIRE MESH SHOULD BE A MINIMUM 14-GAUGE WITH 6 INCH MESH SPACING.
6. EXTRA STRENGTH FILTER FABRIC WITH 6 FOOT POST SPACING DOES NOT REQUIRE A WIRE MESH SUPPORT FENCE. SECURELY FASTEN THE FILTER FABRIC DIRECTLY TO POSTS. WIRE OR PLASTIC ZIP TIES SHOULD HAVE A MINIMUM OF 50 POUND TENSILE STRENGTH.
7. EXCAVATE THE TRENCH APPROXIMATELY 4 INCHES WIDE AND 8 INCHES DEEP ALONG THE PROPOSED LINE OF THE POSTS AND UPSLOPE FROM THE BARRIER.
8. PLACE 12 INCHES OF FABRIC ALONG THE BOTTOM AND SIDE OF THE TRENCH.
9. BACKFILL THE TRENCH WITH SOIL PLACED OVER THE FILTER FABRIC AND COMPACT. THOROUGH COMPACTION OF THE BACKFILL IS CRITICAL TO SILT FENCE PERFORMANCE.
10. DO NOT ATTACH FILTER FABRIC TO EXISTING TREES.
11. DO NOT PLACE ACROSS DITCHES, STREAMS, OR ANY OTHER AREAS OF CONCENTRATED FLOW.

C1 TEMPORARY SEDIMENT FENCE
NTS

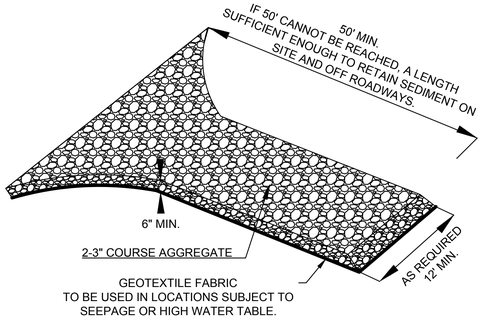

MAINTENANCE:
1. INSPECT ALL MEASURES AT LEAST WEEKLY AND AFTER EACH RAINFALL OF 1.0 INCH OR GREATER. MAKE ANY REQUIRED REPAIRS IMMEDIATELY.
2. MAINTAIN THE GRAVEL PAD IN A CONDITION TO PREVENT MUD OR SEDIMENT FROM LEAVING THE CONSTRUCTION SITE. THIS MAY REQUIRE PERIODIC TOPDRESSING WITH 2-INCH STONE.
3. SEDIMENT ON ROADWAYS IS TO BE REMOVED IMMEDIATELY BY BROOM AND SHOVEL, EITHER BY MANUAL OR MECHANICAL MEANS, AND NOT TO BE WASHED OFF WHERE IT HAS THE POTENTIAL TO ENTER A STREAM, DRAINAGE WAY OR STORM DRAIN SYSTEM.

CONSTRUCTION:
1. CLEAR THE ENTRANCE AND EXIT AREA OF ALL VEGETATION, ROOTS, AND OTHER OBJECTIONABLE MATERIAL AND PROPERLY GRADE IT.
2. PLACE THE GRAVEL TO THE SPECIFIC GRADE AND DIMENSIONS SHOWN ON THE PLANS, AND SMOOTH IT.
3. PROVIDE DRAINAGE TO CARRY WATER TO A SEDIMENT TRAP OR OTHER SUITABLE OUTLET.
4. USE GEOTEXTILE FABRICS IN ORDER TO IMPROVE STABILITY OF THE FOUNDATION IN LOCATIONS SUBJECT TO SEEPAGE OR HIGH WATER TABLE.

A1 CONSTRUCTION ENTRANCE
NTS

NORTH CAROLINA PROFESSIONAL SEAL 051957 ENGINEER ANDREW T. ARNOLD 7.15.26

Dewberry
Dewberry Engineers Inc.
2610 Wycliff Road
Suite 410
Raleigh, NC 27607-3073
919.881.9039
NC License No. F-0929

100% DESIGN

C-501

NRW ENGINEERING
NRW Engineering, P.C.
748 Lord Dunmore Drive, Suite 101
Virginia Beach, VA 23464-2964

DEPARTMENT OF THE NAVY — NAVAL FACILITIES ENGINEERING COMMAND
MARINE CORPS BASE
CAMP LEJEUNE, NORTH CAROLINA

DES.	ANH
DR.	JCK
CHK.	ATA
SUBMITTED BY:	JSH
DESIGN DIR.	CHRIS MAAS, PE
APPROVED: PWO OR OICC	DATE
PWO	
SATISFACTORY TO	DATE
Christopher Maas	16-Jul-2026

PROJECT 25-0087
FC444 ALUMINUM SULFATE TANK REPAIRS
CIVIL DETAILS

SIZE	CODE IDENT.NO	NAVFAC DRAWING NO.
E1	XXXXX	60044635
		CONST. CONTR. NO. N40085-24-D-0011
SCALE: NOTED	SPEC. 25-0087	SHEET 18 OF 25

GENERAL NOTES:

GENERAL NOTES:

1. ALL WORK MUST COMPLY WITH THE CODES LISTED BELOW AND IN THE SPECIFICATIONS

2. THIS STRUCTURE HAS BEEN DESIGNED IN ACCORDANCE WITH THE PROVISIONS OF THE INTERNATIONAL BUILDING CODE, 2024 EDITION, AS MODIFIED BY UFC 1-200-01, DATED 01 SEPTEMBER 2022, CHANGE 4 17 DECEMBER 2024 AND IN ACCORDANCE WITH UFC 3-301-01 "STRUCTURAL ENGINEERING", DATED 11 APRIL 2023, CHANGE 6, 30 JANUARY 2026.

3. VERIFY ALL DRAWINGS FOR COORDINATION BETWEEN TRADES, LOCATE SLOTS, SLEEVES AND TRENCHES AS REQUIRED FOR MECHANICAL TRADES. PROVIDE AND INSTALL ANCHORS, INSERTS, HANGERS, ETC. AS REQUIRED FOR VARIOUS TRADES.

4. THE CONTRACTOR IS RESPONSIBLE FOR DIMENSIONS, ELEVATIONS, ETC., NECESSARY FOR THE PROPER CONSTRUCTION AND ALIGNMENT OF THE NEW PORTIONS OF THE STRUCTURE TO THE EXISTING STRUCTURE. MAKE ALL MEASUREMENTS NECESSARY PRIOR TO THE FABRICATION AND ERECTION OF STRUCTURAL MEMBERS.

5. BEFORE PROCEEDING WITH ANY WORK WITHIN THE EXISTING STRUCTURE, BECOME FAMILIAR WITH STRUCTURAL CONDITIONS OF THE EXISTING STRUCTURE. IT IS THE CONTRACTOR'S RESPONSIBILITY TO PROVIDE ALL NECESSARY SAFEGUARDS, TO MAINTAIN ALL PARTS OF THE STRUCTURE IN A SAFE CONDITION AT ALL TIMES DURING THE PROCESS OF CONSTRUCTION AND TO PROTECT FROM DAMAGE THOSE PORTIONS OF THE EXISTING BUILDING WHICH ARE TO REMAIN.

6. SUBMIT SHOP DRAWINGS FOR REVIEW BEFORE PROCEEDING WITH THE WORK. THE CONTRACTOR MUST CHECK ALL DIMENSIONS AND ACCEPT FULL RESPONSIBILITY FOR DIMENSIONAL CORRECTNESS.

7. UNDER NO CIRCUMSTANCES CAN THE REPRODUCTION OF CONTRACT DRAWINGS BE USED AS SHOP DRAWINGS.

8. PROVIDE ALL TEMPORARY GUYING AND BRACING REQUIRED TO ERECT AND HOLD THE STRUCTURE IN PROPER ALIGNMENT UNTIL ALL STRUCTURAL WORK AND CONNECTIONS HAVE BEEN COMPLETED.

9. IN ACCORDANCE WITH GENERALLY ACCEPTED CONSTRUCTION PRACTICES, CONTRACTOR WILL BE SOLELY AND COMPLETELY RESPONSIBLE FOR CONDITION OF JOB SITE INCLUDING SAFETY OF ALL PERSONS AND PROPERTY DURING PERFORMANCE OF THE WORK.

10. THE DUTY OF THE CONTRACTING OFFICER CONDUCTING CONSTRUCTION REVIEW OF CONTRACTOR'S PERFORMANCE IS NOT INTENDED TO INCLUDE REVIEW OF ADEQUACY OF CONTRACTOR'S SAFETY MEASURES IN, ON, OR NEAR THE CONSTRUCTION SITE.

11. TYPICAL DETAILS AND GENERAL NOTES APPLY TO ALL PARTS OF THE JOB EXCEPT WHERE SPECIFICALLY DETAILED OR NOTED OTHERWISE.

12. STRUCTURAL DRAWINGS SHOW ONLY THE BASIC STRUCTURAL FRAMING. REFER TO CIVIL DRAWINGS FOR NON-STRUCTURAL ITEMS WHICH REQUIRE SPECIAL PROVISIONS DURING THE CONSTRUCTION OF THE STRUCTURAL FRAME.

13. INFORM THE CONTRACTING OFFICER IN WRITING OF ANY DEVIATION FROM THE CONTRACT DOCUMENTS. THE CONTRACTOR IS NOT RELIEVED OF THE RESPONSIBILITY OF SUCH DEVIATION BY THE CONTRACTING OFFICER REVIEW OF SHOP DRAWINGS, PRODUCT DATA, ETC. UNLESS THE CONTRACTOR HAS SPECIFICALLY INFORMED THE CONTRACTING OFFICER OF SUCH DEVIATION AT THE TIME OF SUBMISSION, AND THE CONTRACTING OFFICER HAS GIVEN WRITTEN APPROVAL TO THE SPECIFIC DEVIATION.

STRUCTURAL STEEL NOTES:

1. STRUCTURAL STEEL MUST COMPLY WITH THE FOURTEENTH EDITION OF THE AMERICAN INSTITUTE OF STEEL CONSTRUCTION (AISC 360) "SPECIFICATION FOR STRUCTURAL STEEL BUILDINGS".

2. STRUCTURAL STEEL MUST BE NEW, CLEAN, AND STRAIGHT, AND CONFORM TO THE FOLLOWING:

   ALL STEEL SHAPES – ASTM A36, UNLESS OTHERWISE NOTED, HOT DIP GALVANIZED

SYM	REVISIONS	DATE	APPROVED

ABBREVIATION LIST

C.L.	CENTER LINE
CONC.	CONCRETE
CONN.	CONNECTION
CONT.	CONTINUOUS
C.J	CONTROL/ CONSTRUCTION JOINT
DIA.	DIAMETER
DWGS.	DRAWINGS
EA.	EACH
ELEV.	ELEVATION
FIN.	FINISH
HORIZ.	HORIZONTAL
H.S.	HIGH STRENGTH
JT.	JOINT
LBS.	POUNDS
MAX.	MAXIMUM
MIN.	MINIMUM
O.C.	ON CENTER
P..I.	POUNDS PER SQUARE INCH
P.S.F.	POUNDS PER SQUARE FOOT
REF.	REFERENCE
REQ'D	REQUIRED
S.J.	SAW JOINT
TYP.	TYPICAL
U.O.N.	UNLESS OTHERWISE NOTED
VERT.	VERTICAL
W/	WITH
W/O	WITH OUT
Ø	DIAMETER
@	AT

NORTH CAROLINA PROFESSIONAL SEAL 061096 07/15/2026 ENGINEER REXTON D. MOLE

Dewberry
Dewberry Engineers Inc.
2610 Wycliff Road
Suite 410
Raleigh, NC 27607-3073
919.881.9939
NC License No. F-0929

100% DESIGN

S-001

NRW ENGINEERING
NRW Engineering, P.C.
748 Lord Dunmore Drive, Suite 101
Virginia Beach, VA 23464-2664

DEPARTMENT OF THE NAVY NAVAL FACILITIES ENGINEERING COMMAND
MARINE CORPS BASE
CAMP LEJEUNE, NORTH CAROLINA

DES.	PDM
DR.	BMM
CHK.	PDM
SUBMITTED BY:	JSH
DESIGN DIR.	CHRIS MAAS, PE
APPROVED: PWO OR OICC	DATE
PWO	
SATISFACTORY TO:	DATE
Christopher Maas	16-Jul-2026

PROJECT 25-0087
FC444 ALUMINUM SULFATE TANK REPAIRS
STRUCTURAL GENERAL NOTES

SIZE	CODE IDENT.NO	NAVFAC DRAWING NO.
E1	XXXXX	60044636
		CONST. CONTR. NO. N40085-24-D-0011
SCALE: NOTED	SPEC. 25-0087	SHEET 19 OF 25

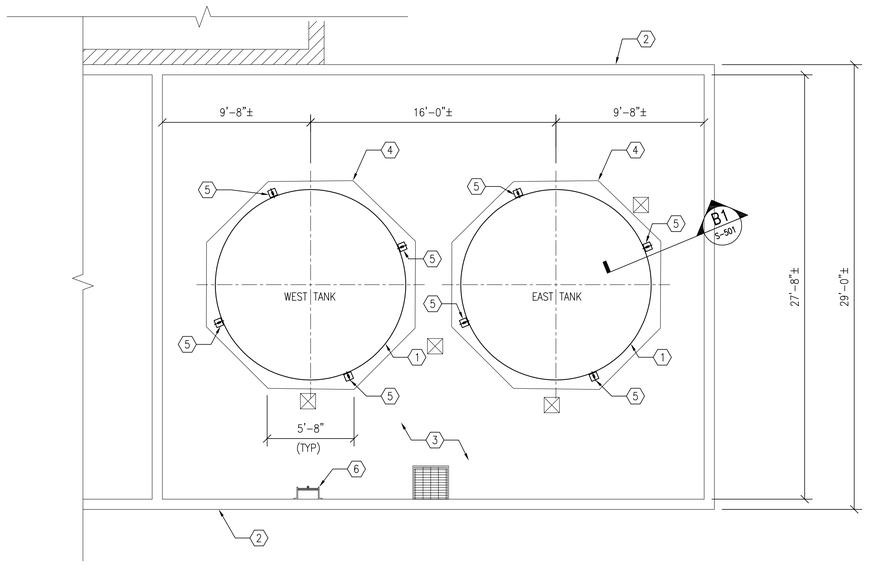

ALUMINUM SULFATE TANK FOUNDATION PLAN

SCALE: 1/4" = 1'-0"

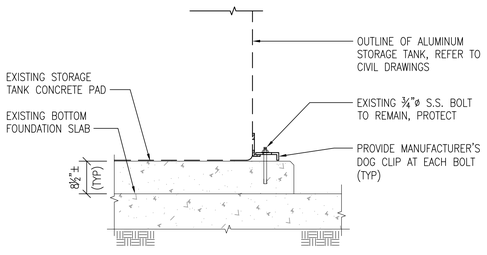

B1 SECTION

SCALE: 3/4" = 1'-0"

SYM	REVISIONS	DATE	APPROVED

GENERAL PLAN NOTES

1. FOR ELEVATIONS AT THE PROJECT SITE, REFER TO CIVIL DRAWINGS.
2. FOR STRUCTURAL GENERAL NOTES, REFER TO SHEET S-001

PLAN KEY NOTES (#)

1. EXISTING ALUMINUM SULFATE STORAGE TANK, 11,000 GALLON, WEIGHT = 3,400 LBS (ESTIMATED)
2. EXISTING 8" THICK CONC WALL
3. EXISTING BOTTOM FOUNDATION SLAB
4. EXISTING 8½" THICK CONCRETE PAD TO REMAIN.
5. EXISTING ¾"ø STAINLESS STEEL ANCHOR BOLT EMBEDDED IN EXISTING CONCRETE PAD, (4)-TOTAL. ANCHOR BOLTS TO REMAIN AND BE RE-USED. PROTECT BOLTS DURING TANK REMOVAL. PROVIDE NEW MANUFACTURER'S DOG CLIP. SEE SECTION ON THIS SHEET
6. EXISTING LADDER ACCESS

1/4" = 1'-0" 0 2' 4' 8'

3/4" = 1'-0" 0 1' 2' 3'

NORTH CAROLINA PROFESSIONAL SEAL 061096 07/15/2026 ENGINEER PETTON D. MULE

Dewberry

Dewberry Engineers Inc.
2610 Wycliff Road
Suite 410
Raleigh, NC 27607-3073
919.881.9939
NC License No. F-0929

100% DESIGN

S-101

NRW ENGINEERING
NRW Engineering, P.C.
748 Lord Dunmore Drive, Suite 101
Virginia Beach, VA 23464-2664

DEPARTMENT OF THE NAVY NAVAL FACILITIES ENGINEERING COMMAND
MARINE CORPS BASE
CAMP LEJEUNE, NORTH CAROLINA

DES.	PDM
DR.	BMM
CHK.	PDM
SUBMITTED BY:	JSH
DESIGN DIR.	CHRIS MAAS, PE

PROJECT 25-0087
FC444 ALUMINUM SULFATE TANK REPAIRS
STRUCTURAL FOUNDATION PLAN AND SECTION

APPROVED: PWO OR OICC DATE
PWO

SATISFACTORY TO: DATE
Christopher Maas 16-Jul-2026

SIZE E1 | CODE IDENT.NO XXXXX | NAVFAC DRAWING NO. 60044637

CONST. CONTR. NO. N40085-24-D-0011

SCALE: NOTED | SPEC. 25-0087 | SHEET 20 OF 25

ABBREVIATIONS - ELECTRICAL

THIS IS A MASTER ABBREVIATIONS LIST. SOME ABBREVIATIONS MAY NOT APPLY TO THIS PROJECT.

A, AMP	AMPERE
AC	ALTERNATING CURRENT
AC	ABOVE CEILING
ADA	AMERICANS WITH DISABILITIES ACT
AF	AMPERE FRAME
AFCI	ARC FAULT CIRCUIT INTERRUPTER
AFF	ABOVE FINISHED FLOOR
AFG	ABOVE FINISHED GRADE
AHJ	AUTHORITY HAVING JURISDICTION
AIC	AMPERES INTERRUPTING CAPACITY
AL, ALUM	ALUMINUM
ANSI	AMERICAN NATIONAL STANDARDS INSTITUTE
ASCE	AMERICAN SOCIETY OF CIVIL ENGINEERS
ASME	AMERICAN SOCIETY OF MECHANICAL ENGINEERS
AT	AMPERE TRIP
ATS	AUTOMATIC TRANSFER SWITCH
AUX	AUXILIARY
AWG	AMERICAN WIRE GAUGE
BCC	BARE COPPER CONDUCTOR
BLDG	BUILDING
BKR	BREAKER
C	CONDUIT
CB	CIRCUIT BREAKER
CJB	CONTROL JUNCTION BOX
CKT	CIRCUIT
CMPR	COMPRESSOR
CMS	COMBINATION MOTOR STARTER
COMM	COMMUNICATION
CONV	CONVENIENCE
CP	CONTROL PANEL
CPT	CONTROL POWER TRANSFORMER
CRI	COLOR RENDERING INDEX
CT	CURRENT TRANSFORMER
CU	COPPER
DB	DUCTBANK
dB	DECIBEL
DC	DIRECT CURRENT
DIV	DIVISION
DPDT	DOUBLE POLE DOUBLE THROW
DPST	DOUBLE POLE SINGLE THROW
DSW	DISCONNECT SWITCH
DWG	DRAWING
E, EX	EXISTING
ECB	ENCLOSED CIRCUIT BREAKER
EGB	EARTH, ELECTRICAL OR EQUIPMENT GROUND BAR
EGC	EQUIPMENT GROUNDING CONDUCTOR
ELEC	ELECTRIC, ELECTRICAL
EMT	ELECTRICAL METALLIC TUBING
EOL	END OF LINE RESISTOR
ETU	ELECTRONIC TRIP UNIT
FA	FIRE ALARM
FIT	FLOW INDICATING TRANSMITTER
FLA	FULL LOAD AMPS
FLEX	FLEXIBLE CONDUIT CONNECTION
FO	FIBER OPTIC
FS	FLOW SWITCH
FSL	FLOW SWITCH LOW
FSH	FLOW SWITCH HIGH
FSS	FUSED SAFETY SWITCH
FTL	FEED-THRU LUGS
FU	FUSE
FVNR	FULL VOLTAGE NON-REVERSING
G, GND	GROUND
GALV	GALVANIZED
GEN	GENERATOR
GFCI, GF	GROUND FAULT CIRCUIT INTERRUPTER
GFEP	GROUND FAULT EQUIPMENT PROTECTION
GFP	GROUND FAULT PROTECTION
GRC	GALVANIZED RIGID METALLIC CONDUIT
HH	HANDHOLE
HL	HORN LIGHT
HOA	HAND OFF AUTO
HP	HORSE POWER
HV	HIGH VOLTAGE
HVAC	HEATING, VENTILATION AND AIR CONDITIONING
HWP	HOT WATER PUMP
Hz	HERTZ, FREQUENCY
IEEE	INSTITUTE OF ELECTRICAL AND ELECTRONICS ENGINEERS
IMC	INTERMEDIATE METALLIC CONDUIT
INT	INTERLOCK
IS	INTRINSICALLY SAFE
ISO	INTERNATIONAL ORGANIZATION FOR STANDARDIZATION
JB	JUNCTION BOX
KCMIL	THOUSAND CIRCULAR MILLS
KV	KILOVOLT
KVA	KILOVOLT-AMPERES
KVAR	KILOVOLT-AMPERES REACTIVE
KW	KILOWATT
KWH	KILOWATT-HOUR
LCP	LIGHTING CONTROL PANEL
LCS	LOCAL CONTROL STATION
LED	LIGHT EMITTING DIODE
LFMC	LIQUID TIGHT FLEXIBLE METALLIC CONDUIT
LIT	LEVEL INDICATING TRANSMITTER
LP	LIGHTING PANEL

ABBREVIATIONS - ELECTRICAL

THIS IS A MASTER ABBREVIATIONS LIST. SOME ABBREVIATIONS MAY NOT APPLY TO THIS PROJECT.

LRA	LOCKED ROTOR AMPS
LS	LEVEL SWITCH
LSH	LEVEL SWITCH HIGH
LSHH	LEVEL SWITCH HIGH-HIGH
LSIG	LONG, SHORT, INSTANTANEOUS & GROUND
LSL	LEVEL SWITCH LOW
LSLL	LEVEL SWITCH LOW-LOW
LTG	LIGHTING
LTS	LIGHTS
LV	LOW VOLTAGE
MCA	MINIMUM CIRCUIT AMPACITY
MCB	MAIN CIRCUIT BREAKER
MCC	MOTOR CONTROL CENTER
MCCB	MOLDED CASE CIRCUIT BREAKER
MCP	MOTOR CIRCUIT PROTECTOR
MDP	MAIN DISTRIBUTION PANEL
MECH	MECHANICAL
MFR	MANUFACTURER
MH	MANHOLE
MLO	MAIN LUGS ONLY
MM	MULTIMODE
MOCP	MAXIMUM OVERCURRENT PROTECTION
MSH	MOTOR SPACE HEATER
MTD	MOUNTED
MTG	MOUNTING
MTR	MOTOR
MTS	MANUAL TRANSFER SWITCH
MW	MEGAWATT
MWTS	MOTOR WINDING TEMPERATURE SWITCH
N	NEUTRAL
N.C.	NORMALLY CLOSED
N.O.	NORMALLY OPEN
N/A	NOT APPLICABLE
NEC	NATIONAL ELECTRIC CODE
NEMA	NATIONAL ELECTRICAL MANUFACTURERS ASSOCIATION
NF	NOT FUSED / NON-FUSED
NFPA	NATIONAL FIRE PROTECTION ASSOCIATION
NFSS	NON-FUSED SAFETY SWITCH
NIC	NOT IN CONTRACT
NL	NIGHT LIGHTING
NPT	NATIONAL PIPE THREAD
NTS	NOT TO SCALE
OHL	OVERHEAD LINE
O.L.	OVERLOAD
OCPD	OVERCURRENT PROTECTIVE DEVICE
P	POLE
PB	PULL BOX
PC	PHOTOCELL
PH, Ø	PHASE
PIT	PRESSURE INDICATING TRANSMITTER
PLC	PROGRAMMABLE LOGIC CONTROLLER
PNL	PANEL
POE	POWER OVER ETHERNET
PP	POWER PANEL
PS	PRESSURE SWITCH, PUMP STATION
PSH	PRESSURE SWITCH HIGH
PSL	PRESSURE SWITCH LOW
PT	PRESSURE TRANSDUCER
PV	PHOTOVOLTAIC
PWR	POWER
QTY	QUANTITY
REC, RECP	RECEPTACLE
RMC	RIGID METALLIC CONDUIT
RNC	RIGID NON-METALLIC CONDUIT
RTU	REMOTE TELEMETRY UNIT
RVSS	REDUCED VOLTAGE SOFT STARTER
SWBD	SWITCHBOARD
S.E.	SERVICE ENTRANCE
SWGR	SWITCHGEAR
SP	SINGLE POLE
SPD	SURGE PROTECTIVE DEVICE
SPDT	SINGLE POLE DOUBLE THROW
SP C.	SPARE CONDUIT
SPST	SINGLE POLE SINGLE THROW
SM	SINGLE MODE
SST	STAINLESS STEEL
ST	SHUNT TRIP
STD	STANDARD
SV	SOLENOID VALVE
SW	SWITCH
SYM	SYMMETRICAL
TEL, TELE	TELEPHONE
TEMP	TEMPORARY
TSP	TWISTED SHIELDED PAIR
TX	TRANSFORMER
TYP	TYPICAL
UPS	UNINTERRUPTABLE POWER SUPPLY
USB	UNIVERSAL SERIAL BUS
UTIL	UTILITY
V	VOLTS
VA	VOLT AMPERES
VAR	VOLT AMPERES REACTIVE
VFD	VARIABLE FREQUENCY DRIVE
VOIP	VOICE OVER INTERNET PROTOCOL
W	WIRE
W	WATT

ABBREVIATIONS - ELECTRICAL

THIS IS A MASTER ABBREVIATIONS LIST. SOME ABBREVIATIONS MAY NOT APPLY TO THIS PROJECT.

WG	WIRE GUARD
WH	WATT HOUR
WPCR	WEATHER PROOF, CORROSION RESISTANT
WTP	WATER TREATMENT PLANT
WWTP	WASTEWATER TREATMENT PLANT
XFR, XFMR	TRANSFORMER
Y	WYE
Z	IMPEDANCE

STANDARDS DETAILING SYMBOLS

SYMBOL	DESCRIPTION
PLAN / DETAIL REF. 1 A-101 SIM SHEET REF. AREA TO BE ENLARGED	CALLOUT
SECTION REF. 1 A-101 SHEET REF.	BUILDING / WALL SECTION
VIEW DESIGNATION 1 View Name SCALE: 1/8" = 1'-0" VIEW NAME VIEW SCALE	VIEW TITLE
GRID NUMBER OR LETTER A	GRID LINE
INDICATES PLAN NORTH INDICATES TRUE NORTH	NORTH INDICATOR
REVISION NUMBER 1	REVISION TAG REVISION CLOUD
1	KEYNOTE TAG (PER SHEET NUMBERS)
LINETYPES	
	BACKGROUND
	EXISTING
	DEMOLITION
	NEW
	FUTURE
	HIDDEN/UNDER OBSTRUCTION

BONDING GROUNDING & LIGHTNING PROTECTION

SYMBOL	DESCRIPTION
	GROUND CONDUCTOR
	AIR TERMINAL
	GROUND BAR
	CAD WELD TERMINATION
	GROUND CONNECTION TO REINFORCED STEEL
	GROUND ROD
	GROUND ROD W/ TEST WELL

SINGLE-LINE SYMBOLS

SYMBOL	DESCRIPTION
P-XXXX	CONDUIT TAG
000,000A	FAULT CURRENT TAG
	CONNECTION
	LEFT: FIXED MOUNT RIGHT: DRAW OUT
	GROUND
G N	NEUTRAL TO GROUND BOND
	CAPACITOR
#	RELAY
SPD XXXX XXXX	SURGE PROTECTIVE DEVICE
# #	CURRENT VOLTAGE TRANSFORMER
# #	GROUND FAULT CURRENT VOLTAGE TRANSFORMER
	POTENTIAL TRANSFORMER
	LIGHTNING ARRESTOR
	REACTOR
	RESISTANCE
	RESISTOR
#	MOTOR
# #	GENERATOR
# #	DISCONNECT SWITCH
	FUSE
# # # # # #	DELTA TO WYE TRANSFORMER
## ## # A MCP	LEFT: LOW VOLTAGE MOLDED CASE CIRCUIT BREAKER RIGHT: MOTOR CIRCUIT PROTECTOR
# # # #	LEFT: FIXED MOUNT RIGHT: BOLT ON
##	VARIABLE FREQUENCY DRIVE/REVERSE VOLTAGE SOFT STARTER
20 A MCP X	FULL VOLTAGE NON-REVERSING STARTER X DENOTES NEMA SIZE

CONTROL SYMBOLS

SYMBOL	DESCRIPTION
PTT X PTT X	INDICATOR LIGHT LEFT: STANDARD RIGHT: PUSH TO TEST X DENOTES COLOR
	THERMAL OVERLOAD RELAY
MSH	MOTOR SPACE HEATER
	LEFT: OPEN CONTACT RIGHT: CLOSED CONTACT
# #	CONTROL POWER TRANSFORMER
XX YY	COIL
LS LS	LIMIT SWITCH LEFT: OPEN RIGHT: CLOSED
	TORQUE
TS TS	TEMPERATURE SWITCHES / THERMOSTATS LEFT: RISE TO CLOSE RIGHT: NORMALLY CLOSED, RISE TO OPEN
PS PS PS PS	PRESSURE SWITCH: NORMALLY OPEN LEFT: RISE TO CLOSE RIGHT: FALL TO CLOSE PRESSURE SWITCH: NORMALLY CLOSED LEFT: RISE TO OPEN RIGHT: FALL TO OPEN
FS FS FS FS	FLOW SWITCH: NORMALLY OPEN LEFT: RISE TO CLOSE RIGHT: FALL TO CLOSE FLOW SWITCH: NORMALLY CLOSED LEFT: RISE TO OPEN RIGHT: FALL TO OPEN
LS LS LS LS	LEVEL SWITCH: NORMALLY OPEN LEFT: RISE TO CLOSE RIGHT: FALL TO CLOSE LEVEL SWITCH: NORMALLY CLOSED LEFT: RISE TO OPEN RIGHT: FALL TO OPEN
TD TD TD TD	TIME DELAY: NORMALLY OPEN LEFT: TIME TO CLOSE RIGHT: TIME TO OPEN TIME DELAY: NORMALLY OPEN LEFT: TIME TO CLOSE RIGHT: TIME TO OPEN
#### ####	SELECTOR SWITCH
E-STOP	PUSH BUTTON
O H A X00 00X	3-POSITION SELECTOR SWITCH: HOA DENOTES HAND/OFF/AUTO LOR DENOTES LOCAL/OFF/REMOTE FOR DENOTES FORWARD/OFF/REVERSE

POWER SYMBOLS

SYMBOL (CEILING MTD / NORMAL WALL MTD / EMERGENCY CRITICAL / STUB UP / FLOOR MTD)	DESCRIPTION
	DUPLEX OUTLETS
	QUADRUPLEX OUTLETS
	SPECIALTY OUTLETS (NEMA TYPE AS SHOWN)
	CORD REEL
	JUNCTION BOX
	EPO PUSH BUTTON
	EQUIPMENT CONNECTION
	LOCAL CONTROL STATION
	ELECTRICAL POLE
M	MANUAL MOTOR STARTER
	NON-FUSIBLE SAFETY SWITCH
	FUSIBLE SAFETY SWITCH
	COMBINATION MOTOR STARTER/SAFETY SWITCH, ENCLOSED CIRCUIT BREAKER
HH	POWER/TELECOMMUNICATIONS HANDHOLE
MH	POWER/TELECOMMUNICATIONS MANHOLE
POWER DISTRIBUTION	
T	TRANSFORMER
T	OIL TYPE TRANSFORMER
LC-1-1	HOME RUN. NUMERALS INDICATE PANELBOARD AND CIRCUIT NUMBERS.
	HOME RUN. MULTIPLE ARROWS INDICATES NUMBER OF CIRCUITS INCLUDED IN CONDUIT (1, 2 OR 3).
	INDICATES CIRCUIT CONTINUATION
	CONDUIT WITH VERTICAL TRANSITION UP
	CONDUIT WITH VERTICAL TRANSITION DOWN
OHE	OVERHEAD POWER
UGE	UNDERGROUND POWER
OHT	OVERHEAD TELECOM
UGT	UNDERGROUND TELECOM
DCE	DC VOLTAGE

SUBSCRIPTS

"AC" = ABOVE COUNTER
"C" = SWITCH CONTROLLED PER ASHRAE 90.1/CAT24)
"G" = GROUND FAULT BREAKER
"GF" = GROUND FAULT
"IG" = ISOLATED GROUND
"UC" = UNDER COUNTER
"USB" = W/ USB PORTS
"WPCR" = WEATHERPROOF BOX

SYM	REVISIONS	DATE	APPROVED

GENERAL NOTES - ELECTRICAL

1. THESE DRAWINGS ARE GENERALLY DIAGRAMMATIC AND DO NOT SHOW ALL DETAILS REQUIRED FOR THE COMPLETE SYSTEM. THEY SHOULD HOWEVER BE FOLLOWED AS CLOSELY AS POSSIBLE IN THE GENERAL ARRANGEMENT AND LOCATION OF EQUIPMENT. ALL DIMENSIONS SHALL BE CHECKED AT THE BUILDING AND ALL STRUCTURAL AND FINISH CONDITIONS INVESTIGATED. THE CONTRACTOR SHALL ARRANGE HIS WORK TO MEET THESE CONDITIONS AND PROVIDED SUCH EQUIPMENT AND ACCESSORIES AS MAY BE REQUIRED.
2. PROPERLY SUPPORT ALL WORK AND EQUIPMENT INSTALLED UNDER THIS CONTRACT PLUMB AND PARALLEL. STUDY ALL GENERAL, STRUCTURAL, MECHANICAL, AND ELECTRICAL DRAWINGS, SHOP DRAWINGS, AND CATALOG DATA TO DETERMINE HOW EQUIPMENT, ACCESSORIES, PIPING, FIXTURES, AND RELATED ITEMS ARE TO BE SUPPORTED, MOUNTED, OR SUSPENDED. PROVIDE ALL BOLTS, INSERTS, PIPE STANDS, BRACKETS, STRUCTURAL SUPPORTS, AND ACCESSORIES FOR PROPER SUPPORT OF EQUIPMENT FURNISHED UNDER THIS CONTRACT. COORDINATE THE ELECTRICAL WORK WITH ALL OTHER CONTRACTORS BEFORE BEGINNING WORK TO ENSURE THAT THE ELECTRICAL WORK DOES NOT INTERFERE WITH OTHER WORK.
3. NOTIFY THE ENGINEER IN WRITING IMMEDIATELY UPON DISCOVERY OF ANY DISCREPANCY OR POINTS OF CONFLICT IN THE DRAWINGS OR THE SPECIFICATIONS.
4. UNLESS SPECIFICALLY NOTED OTHERWISE, ALL UNDERGROUND ELECTRICAL CONDUITS SHALL BE CONCRETE ENCASED PER STANDARD DETAILS.
5. THE INSTALLATION OF ALL CONCRETE ENCASED ELECTRICAL CONDUITS SHALL COMPLY WITH ACI 318, SECTION 6.3. CONTRACTOR SHALL SUPPLY EXPANSION JOINT FITTINGS AS REQUIRED FOR THERMAL EXPANSION AND DEFLECTION.
6. BOND ALL CONCRETE ENCASED GROUND CONDUCTORS TO EXISTING GROUND CONDUCTORS IN ALL MANHOLES, PULL BOXES, CABLE TRAYS, AND SIMILAR LOCATIONS WHERE APPLICABLE.
7. UNLESS OTHERWISE SPECIFIED OR NOTED, ALL WALL MOUNTED ELECTRICAL PANELS, ENCLOSURES, AND SIMILAR EQUIPMENT SHALL BE MOUNTED 6'-6" (MAX) FROM THE TOP OF THE PANEL TO FINISHED FLOOR OR GRADE.
8. UNLESS OTHERWISE NOTED. ALL LIGHTING SWITCHES, CONTROL SWITCHES, AND SIMILAR EQUIPMENT SHALL BE MOUNTED WITH THEIR CENTERLINE APPROXIMATELY 4'-0" ABOVE FINISHED FLOOR, SLAB, OR GRADE. THERMOSTATS SHALL BE MOUNTED 4'-4" ABOVE FINISHED FLOOR.
9. A SEPARATE EQUIPMENT GROUNDING CONDUCTOR SHALL BE PROVIDED FOR EACH CIRCUIT (SEPARATE CONDUCTOR IN THE CONDUIT). THE CONDUCTOR SHALL BE TERMINATED AT THE PROPER DEVICE, TERMINAL, OR LUG AT THE POWER SOURCE (MCC GROUND BUS, PANELBOARD GROUND BUS, ETC.). GROUND CONDUCTOR SIZE SHALL BE PER THE LATEST EDITION OF THE NEC.
10. ELECTRICAL SYSTEMS INSTALLED IN HAZARDOUS LOCATIONS SHALL BE CONSTRUCTED IN ACCORDANCE WITH CHAPTER 5, ARTICLE 500 OF THE LATEST EDITION OF THE NEC. CONTRACTOR SHALL SEAL ALL CONDUITS LEAVING HAZARDOUS AREAS. WALL AND FLOOR OPENINGS SHALL BE SEALED WITH FIREPROOF COMPOUND.
11. ALL EQUIPMENT LOCATED IN HAZARDOUS AREAS SHALL BE SUITABLE FOR THE CLASS, DIVISION, AND GROUP RATING OF THE LOCATION.
12. ALL CONDUIT HOMERUNS ARE NOT SHOWN ON DRAWINGS. CONTRACTOR SHALL REFER TO CONDUIT AND WIRE SCHEDULE, RISER DIAGRAMS, SINGLE LINE DIAGRAMS, AND OTHER DRAWINGS FOR CONDUIT AND WIRE REQUIREMENTS.

NORTH CAROLINA PROFESSIONAL SEAL 055304 07.15.2026 ENGINEER STEPHEN C. BLUCHER

Dewberry
Dewberry Engineers Inc.
2610 Wycliff Road
Suite 410
Raleigh, NC 27607-3073
919.881.9939
NC License No. F-0929

100% DESIGN

E-001

NRW ENGINEERING
NRW Engineering, P.C.
748 Lord Dunmore Drive, Suite 101
Virginia Beach, VA 23464-2664

DEPARTMENT OF THE NAVY NAVAL FACILITIES ENGINEERING COMMAND
MARINE CORPS BASE
CAMP LEJEUNE, NORTH CAROLINA

PROJECT 25-0087
FC444 ALUMINUM SULFATE TANK REPAIRS
SYMBOLS & ABBREVATIONS

DES.	AJL
DR.	AJL
CHK.	SCB
SUBMITTED BY:	JSH
DESIGN DIR.	CHRIS MAAS, PE
APPROVED: PWO OR OICC	DATE
PWO	
SATISFACTORY TO	DATE
Christopher Maas	16-Jul-2026

SIZE E1 | CODE IDENT.NO XXXXX | NAVFAC DRAWING NO. 60044638
CONST. CONTR. NO. N40085-24-D-0011
SCALE: NOTED | SPEC. 25-0087 | SHEET 21 OF 25

SYM	REVISIONS	DATE	APPROVED

GENERAL SHEET NOTES

1. SEE SHEET G-002 FOR GENERAL NOTES.
2. SEE SHEET V-001 FOR SURVEY NOTES & LEGEND.
3. SEE SHEET C-001 FOR CIVIL NOTES & LEGEND.
4. SEE SHEET E-001 FOR ELECTRICAL NOTES & LEGEND.

CONSTRUCTION KEYNOTES

1. DEMO EQUIPMENT AND ASSOCIATED CONDUIT AND WIRE.

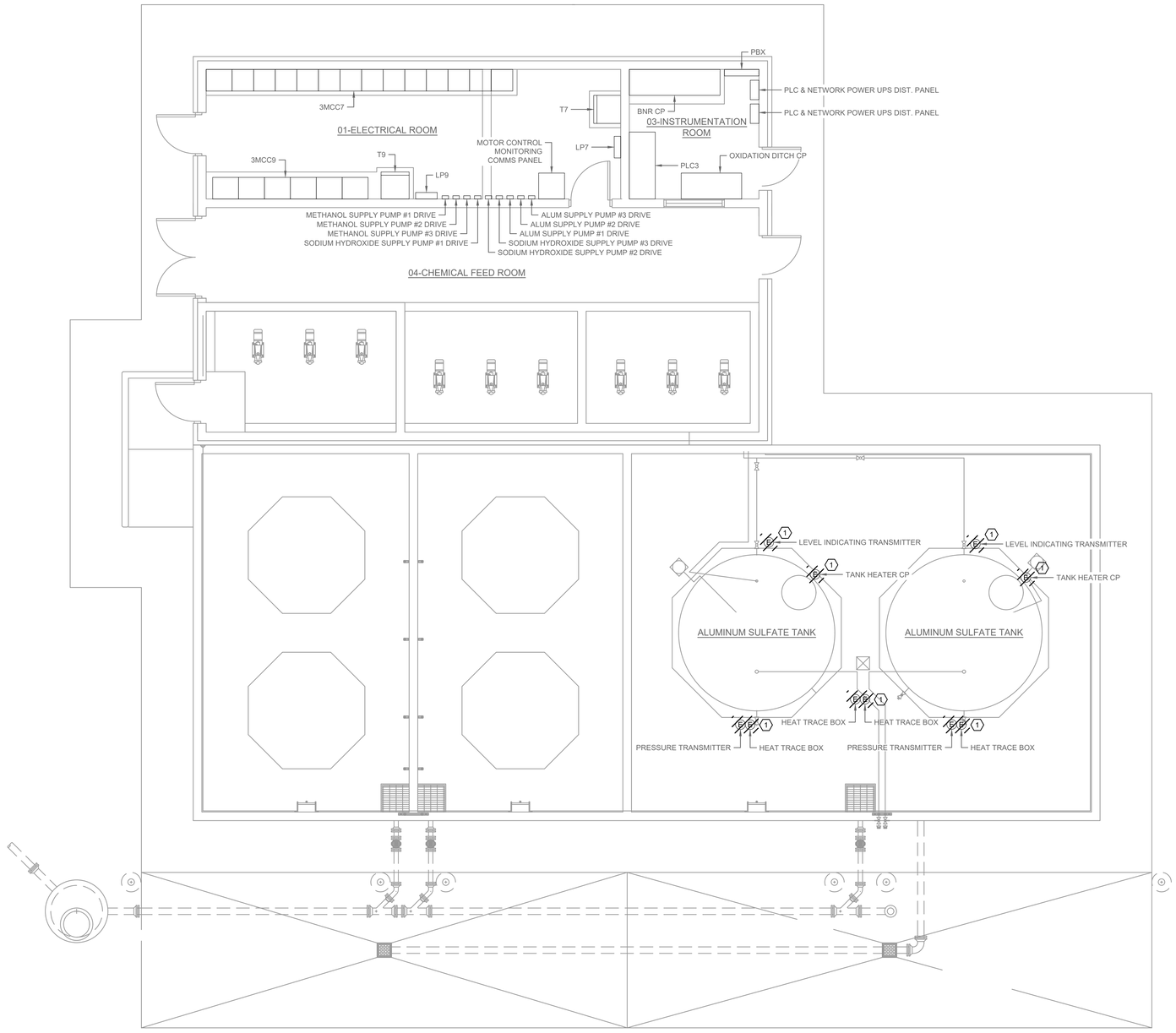

A1 POWER DEMOLITION PLAN
SCALE 1/4" = 1'-0"

PLAN NORTH

GRAPHIC SCALE(S)

0' 2' 4' 8'

NORTH CAROLINA PROFESSIONAL SEAL 055304 07.15.2026 ENGINEER STEPHEN C. BLUCHER

100% DESIGN

ED101

NRW ENGINEERING
NRW Engineering, P.C.
748 Lord Dunmore Drive, Suite 101
Virginia Beach, VA 23464-2664

DEPARTMENT OF THE NAVY NAVAL FACILITIES ENGINEERING COMMAND
MARINE CORPS BASE
CAMP LEJEUNE, NORTH CAROLINA

Dewberry
Dewberry Engineers Inc.
2610 Wycliff Road
Suite 410
Raleigh, NC 27607-3073
919.881.9939
NC License No. F-0929

DES.	AJL
DR.	AJL
CHK.	SCB
SUBMITTED BY:	JSH
DESIGN DIR.	CHRIS MAAS, PE

PROJECT 25-0087
FC444 ALUMINUM SULFATE TANK REPAIRS
POWER DEMOLITION PLAN

APPROVED: PWO OR OICC	DATE	SIZE	CODE IDENT.NO	NAVFAC DRAWING NO.
PWO		E1	XXXXX	60044639
SATISFACTORY TO	DATE			CONST. CONTR. NO. N40085-24-D-0011
Christopher Maas	16-Jul-2026	SCALE: NOTED	SPEC. 25-0087	SHEET 22 OF 25

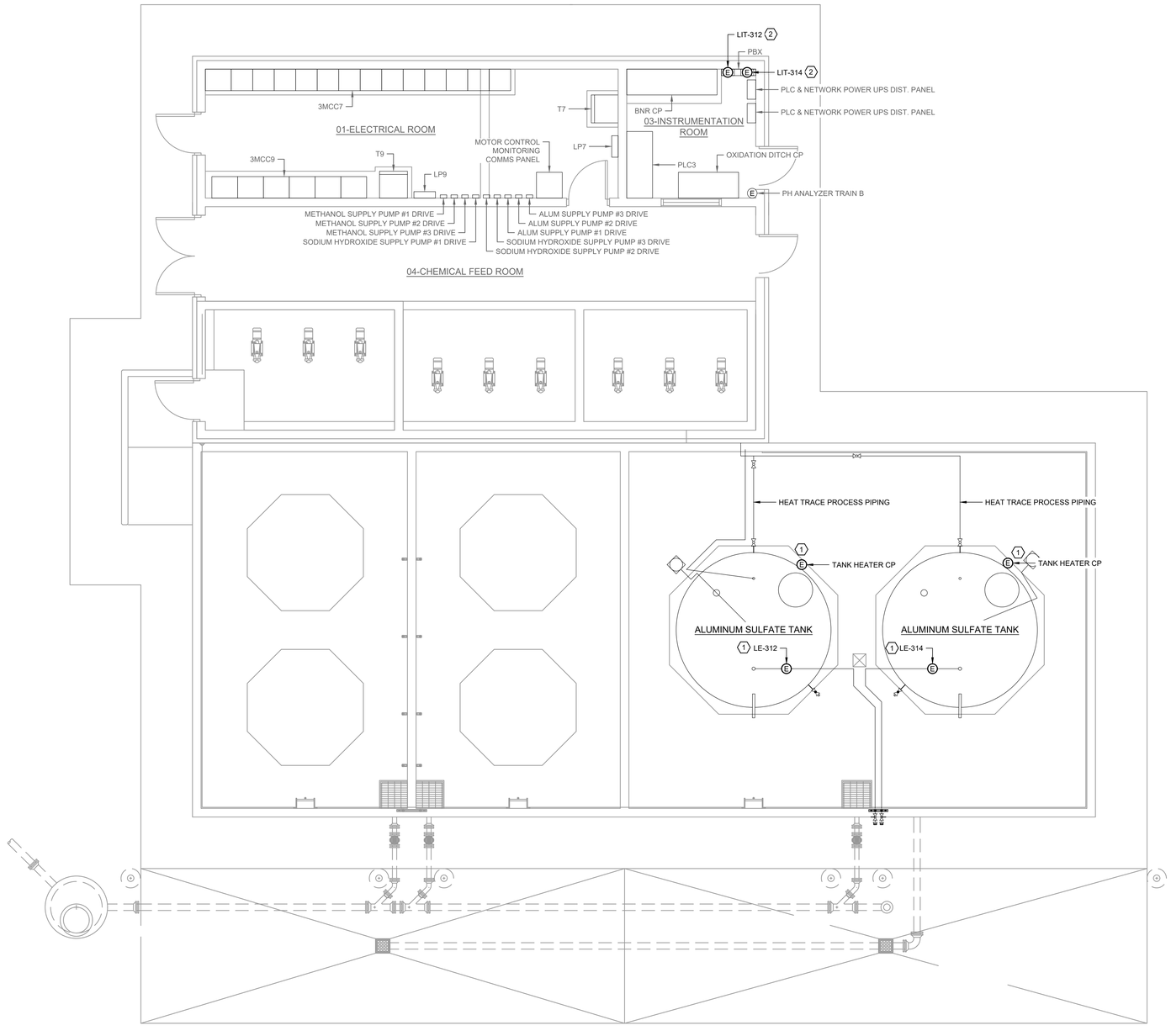

A1 POWER NEW WORK PLAN
SCALE 1/4" = 1'-0"

PLAN NORTH

SYM	REVISIONS	DATE	APPROVED

GENERAL SHEET NOTES

1. SEE SHEET G-002 FOR GENERAL NOTES.
2. SEE SHEET V-001 FOR SURVEY NOTES & LEGEND.
3. SEE SHEET C-001 FOR CIVIL NOTES & LEGEND.
4. SEE SHEET E-001 FOR ELECTRICAL NOTES & LEGEND.
5. PROVIDE HEAT TRACING FOR PROCESS PIPING:
   - 5.1. 120V, 3W/FT
   - 5.2. CONTINUOUS MAINTENANCE TEMPERATURE OF 150°F
   - 5.3. HARD WIRED
   - 5.4. MOISTURE, CHEMICAL, AND FLAME RESISTANT
   - 5.5. TINNED COPPER METAL BRAID WITH FLUOROPOLYMER OVERJACKET WITH A RESISTANCE OF .003Ω/FT
   - 5.6. 16AWG BUS WIRES
   - 5.7. -T6 RATING
6. ROUTE CONDUIT CONSISTENT WITH EXISTING INFRASTRUCTURE AND THE NEC.

CONSTRUCTION KEYNOTES

1. PROVIDE NEW CONDUIT AND WIRE FOR NEW EQUIPMENT AND INSTRUMENTATION.
2. MOUNT LEVEL INDICATING TRANSMITTERS ABOVE EXISTING PULL BOX.

GRAPHIC SCALE(S)

0' 2' 4' 8'

NORTH CAROLINA PROFESSIONAL SEAL 055304 07.15.2026 ENGINEER STEPHEN C. BLUCHER

Dewberry
Dewberry Engineers Inc.
2610 Wycliff Road
Suite 410
Raleigh, NC 27607-3073
919.881.9939
NC License No. F-0929

100% DESIGN

E-101

NRW ENGINEERING
NRW Engineering, P.C.
748 Lord Dunmore Drive, Suite 101
Virginia Beach, VA 23464-2664

DEPARTMENT OF THE NAVY — NAVAL FACILITIES ENGINEERING COMMAND
MARINE CORPS BASE
CAMP LEJEUNE, NORTH CAROLINA

DES.	AJL
DR.	AJL
CHK.	SCB
SUBMITTED BY:	JSH
DESIGN DIR.	CHRIS MAAS, PE
APPROVED: PWO OR OICC	DATE
PWO	
SATISFACTORY TO	DATE
Christopher Maas	16-Jul-2026

PROJECT 25-0087
FC444 ALUMINUM SULFATE TANK REPAIRS
POWER NEW WORK PLAN

SIZE	CODE IDENT.NO	NAVFAC DRAWING NO.
E1	XXXXX	60044640
		CONST. CONTR. NO. N40085-24-D-0011
SCALE: NOTED	SPEC. 25-0087	SHEET 23 OF 25

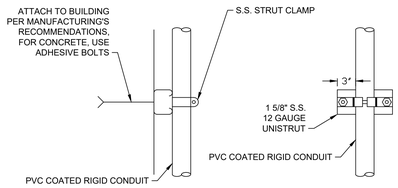

NOTES:
1. SEE PLAN AND SECTION DRAWINGS FOR CONDUIT SIZES.
2. ALL HARDWARE SHALL BE 316 STAINLESS STEEL.

1 CONDUIT SUPPORT DETAIL

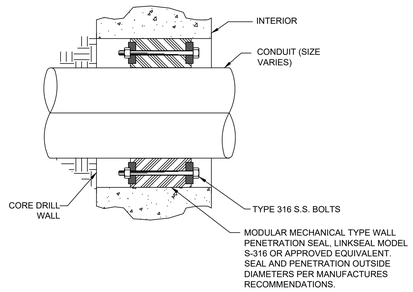

2 CONDUIT PENETRATION DETAIL

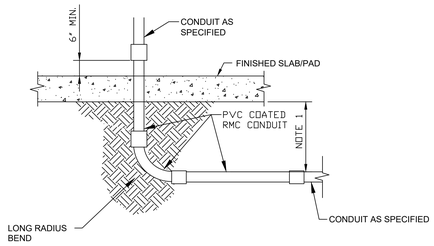

NOTES:
1. 36" DEEP FOR POWER, 24" DEEP FOR NON-POWER, 2" MINIMUM EMBEDMENT DEPTH IN CONCRETE WALKWAYS.

3 CONDUIT THROUGH CONCRETE PAD DETAIL

NOTES:
1. GROUNDING CONDUCTORS AND MAIN BONDING JUMPER SHALL BE BARE COPPER UNO AND SHALL BE SIZED AS INDICATED IN ELECTRICAL RISER AND THIS DETAIL.
2. CONNECTIONS TO STRUCTURAL STEEL AND GROUND RODS SHALL BE EXOTHERMICALLY WELDED.
3. GROUNDING ELECTRODE CONDUCTOR CONDUIT SHALL BE BONDED AT EACH END BY MEANS OF A GROUNDING BUSHING.
4. PROVIDE GROUND ROD LENGTH (MINIMUM 10') AND QUANTITY TO ACHIEVE GROUND ROD RESISTANCE OF LESS THAN 5 OHMS AT SERVICE EQUIPMENT.

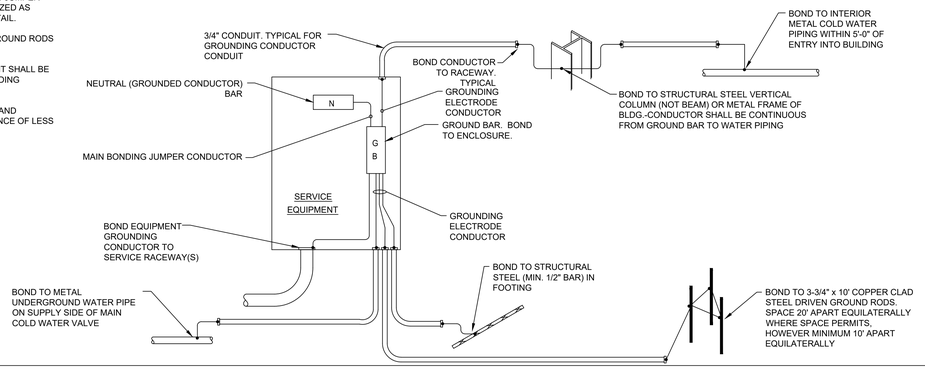

4 GROUNDING / BONDING

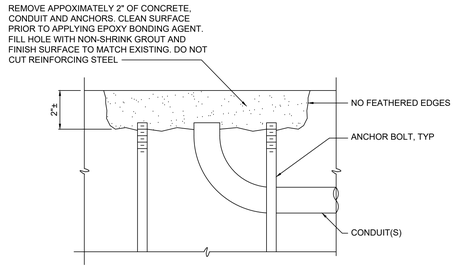

5 SEALING ABANDONED CONDUIT

SYM	REVISIONS	DATE	APPROVED

NORTH CAROLINA PROFESSIONAL SEAL 055304 ENGINEER STEPHEN C. BLUCHER 07.15.2026

Dewberry
Dewberry Engineers Inc.
2610 Wycliff Road
Suite 410
Raleigh, NC 27607-3073
919.881.9939
NC License No. F-0929

100% DESIGN

E-501

NRW ENGINEERING
NRW Engineering, P.C.
748 Lord Dunmore Drive, Suite 101
Virginia Beach, VA 23464-2664

DEPARTMENT OF THE NAVY — NAVAL FACILITIES ENGINEERING COMMAND
MARINE CORPS BASE
CAMP LEJEUNE, NORTH CAROLINA

DES.	AJL
DR.	AJL
CHK.	SCB
SUBMITTED BY:	JSH
DESIGN DIR.	CHRIS MAAS, PE
APPROVED: PWO OR OICC	DATE
PWO	
SATISFACTORY TO:	DATE
Christopher Maas	16-Jul-2026

PROJECT 25-0087
FC444 ALUMINUM SULFATE TANK REPAIRS
DETAILS

SIZE	CODE IDENT.NO	NAVFAC DRAWING NO.
E1	XXXXX	60044641
		CONST. CONTR. NO. N40085-24-D-0011
SCALE: NOTED	SPEC. 25-0087	SHEET 24 OF 25

208/120 VOLTS
3 PHASE, 4 WIRE
10kAIC

PANEL LP7
MAIN BREAKER
125A 3P

TYPE: NEMA 1
MOUNT: SURFACE

DESCRIPTION	WIRE	TRIP	POLE	No.	VOLT-AMPERES A	VOLT-AMPERES B	VOLT-AMPERES C	VOLT-AMPERES A	VOLT-AMPERES B	VOLT-AMPERES C	No.	POLE	TRIP	WIRE	DESCRIPTION
AIT TRAIN A1 DO		20	1	1	360			360			2	1	20		LIT TRAIN A2
LIT TRAIN A1		20	1	3		360			360		4	1	20		AIT TRAIN B2
LIT TRAIN B1		20	1	5			360			360	6	1	20		AIT TRAIN B1
AIT TRAIN A2 DO	OFF	20	1	7	360			360			8	1	20		LIT TRAIN B2
PH ANALYZER TRAIN A	OFF	20	1	9		360			360		10	1	20		NITRATE ANALYZER RM 03
PH ANALYZER TRAIN B		20	1	11			360			360	12	1	20		LIT LIFT STATION
NITRATE ANALYZER A	OFF	20	3	13	360			360			14	1	20		AIT LIFT STATION DO
				15		360			**120**		**16**	**1**	**20**	**2#12, #12G, 3/4"C**	**ALUM TANK 1 LIT 312** (1)
			1	17			360			**120**	**18**	**1**	**20**	**2#12, #12G, 3/4"C**	**ALUM TANK 2 LIT 314** (1)
NITRATE ANALYZER B		20	3	19	360			---			20	1	20		SPARE
				21		360			360		22	2	20		AHU-C1
			1	23			360			360	24				
EX FAN 10		20	3	25	240			240			26	3	20		EX FAN 9
				27		240			240		28				
				29			240			240	30				
				TOTAL	1,680	1,680	1,680	1,320	1,440	1,440	TOTAL				
					PHASE TOTAL			TOTAL LOAD							
					3,000	3,120	3,120	9,240							

NOTES:
EXISTING LOAD VA ARE ESTIMATES

TOTAL LOAD (AMPS)
25.6
20.5%

1 LIGHTING PANEL 7
PANELBOARD SCHEDULE

208/120 VOLTS
3 PHASE, 4 WIRE
10kAIC

PANEL LP9
MAIN BREAKER
150A 3P

TYPE: NEMA 1
MOUNT: SURFACE

DESCRIPTION	WIRE	TRIP	POLE	No.	VOLT-AMPERES A	VOLT-AMPERES B	VOLT-AMPERES C	VOLT-AMPERES A	VOLT-AMPERES B	VOLT-AMPERES C	No.	POLE	TRIP	WIRE	DESCRIPTION
LTS, RM 01, 03		20	1	1	240			---			2	1	20		LTS, RM 04, 05
LTS, EXTERIOR & WELL		20	1	3		240			1,920		4	1	20		RECEP, RM 01, 03
C2I PLC		20	1	5			240			---	6	1	20		KRUGER PLC
ALUM TANK 1 HEAT TRACE (1)(2)	**2#12, #12G, 3/4"C**	**20**	**1**	**7**	**1,000**			---			8	1	20		FUEL PUMP
ALUM TANK 2 HEAT TRACE (1)(2)	**2#12, #12G, 3/4"C**	**20**	**1**	**9**		**1,000**			2,880		10	1	30		UPS-3
SOD. HYD. HEAT TRACE		20	1	11			---			2,880	12	1	30		UPS-4
SOD. HYD. HEAT TRACE		20	1	13	---			**500**			**14**	**1**	**20**	**2#12, #12G, 3/4"C**	**ALUM TANK 1 HEATER**
OXIDATION DITCH PLC		20	1	15		240			**500**		**16**	**1**	**20**	**2#12, #12G, 3/4"C**	**ALUM TANK 2 HEATER**
ALUM. SULF. DRIVE 3		20	1	17			528			528	18	1	20		ALUM. SULF. DRIVE 2
ALUM. SULF. DRIVE 1		20	1	19	528			528			20	1	20		SOD. HYD. DRIVE 3
SOD. HYD. DRIVE 2		20	1	21		528			528		22	1	20		SOD. HYD. DRIVE 1
METHANOL DRIVE 3		20	1	23			528			528	24	1	20		METHANOL DRIVE 2
METHANOL DRIVE 1		20	1	25	528			---			26	1	20		SPARE
SPARE		20	1	27		---			---		28	1	20		SPARE
SPARE		20	1	29			---			---	30	1	20		SPARE
SPARE		20	1	31	---			---			32	1	20		SPARE
SPARE		20	1	33		---			---		34	1	20		SPARE
SPARE		20	1	35			---			---	36	1	20		SPARE
HEAT TRACE C.P.		100	3	37	---			1,920			38	2	20		OUTLET FOR STEAM JENNY
				39		---			1,920		40				
				41			---			1,920	42	1	20		GENERATOR BATT CHARGER OUTLET
				TOTAL	2,296	2,008	1,296	2,948	7,748	5,856	TOTAL				
					PHASE TOTAL			TOTAL LOAD							
					5,244	9,756	7,152	22,152							

NOTES:
EXISTING LOAD VA ARE ESTIMATES

TOTAL LOAD (AMPS)
61.5
41.0%

2 LIGHTING PANEL 9
PANELBOARD SCHEDULE

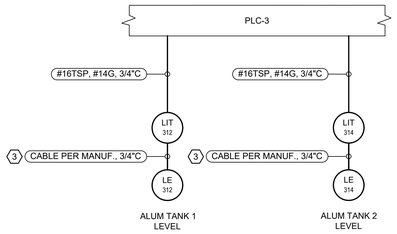

3 PROGRAMMABLE LOGIC CONTROLLER 3
PARTIAL CONTROL ONE-LINE

SYM	REVISIONS	DATE	APPROVED

GENERAL SHEET NOTES

1. CONTRACTOR SHALL FIELD VERIFY EXISTING I/O SWITCH HAS SUFFICIENT SPACE FOR NEW I/O. CONTRACTOR SHALL PROVIDE ALL HARDWARE, APPURTENANCES, AND SPECIAL REQUIREMENTS NECESSARY TO ACCOMMODATE NEW I/O.

CONSTRUCTION KEYNOTES

1. CONTRACTOR SHALL PROVIDE NEW CIRCUIT BREAKERS FOR THE NEW EQUIPMENT AND INSTRUMENTATION, AND TURN OVER EXISTING BREAKERS TO THE GOVERNMENT.
2. UTILIZE EXISTING HEAT TRACE CIRCUITS FOR NEW HEAT TRACE CIRCUITS.
3. CONTRACTOR SHALL COORDINATE WITH MANUFACTURER FOR CABLE SIZING AND INSTALLATION.

NORTH CAROLINA PROFESSIONAL SEAL 055304 ENGINEER 07.15.2026 STEPHEN C. BLUCHER

Dewberry
Dewberry Engineers Inc.
2610 Wycliff Road
Suite 410
Raleigh, NC 27607-3073
919.881.9939
NC License No. F-0929

100% DESIGN

E-901

NRW ENGINEERING
NRW Engineering, P.C.
748 Lord Dunmore Drive, Suite 101
Virginia Beach, VA 23464-2664

DEPARTMENT OF THE NAVY — NAVAL FACILITIES ENGINEERING COMMAND
MARINE CORPS BASE
CAMP LEJEUNE, NORTH CAROLINA

DES.	AJL
DR.	AJL
CHK.	SCB
SUBMITTED BY:	JSH
DESIGN DIR.	CHRIS MAAS, PE
APPROVED: PWO OR OICC	DATE
PWO	
SATISFACTORY TO	DATE
Christopher Maas	16-Jul-2026

PROJECT 25-0087
FC444 ALUMINUM SULFATE TANK REPAIRS
PANEL SCHEDULES AND CONTROL ONE-LNE

SIZE	CODE IDENT.NO	NAVFAC DRAWING NO.
E1	XXXXX	60044642
		CONST. CONTR. NO. N40085-24-D-0011
SCALE: NOTED	SPEC. 25-0087	SHEET 25 OF 25