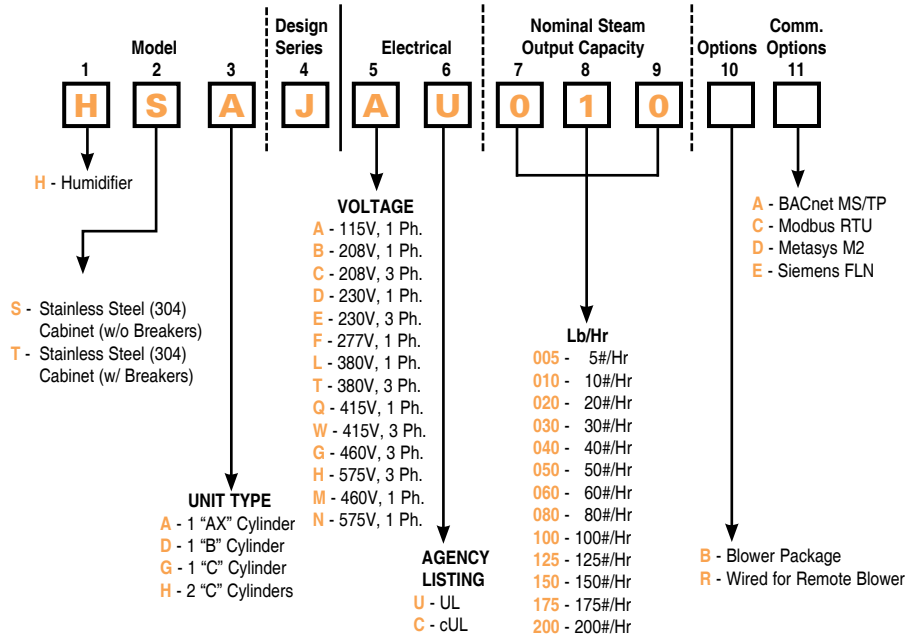

***NOTE:** AN EXTERNAL FUSED DISCONNECT SWITCH, OR OTHER SIMILAR PROTECTION, AS REQUIRED BY LOCAL, AND NATIONAL ELECTRICAL CODES MUST BE SUPPLIED AND INSTALLED BY OTHERS. An optional circuit breaker (except for select models over 48 amps) is available in the unit to reduce the risk of costly damage in the event of internal failure. It is not meant to be the primary protection as may be required by local and national electrical codes. All units include electronic overload protection as a standard feature.

▼ UNIT VOLTAGE CHARACTERISTICS

Humidifiers may be ordered with the voltage nameplate ratings shown below. The units may be operated at nominal system voltage shown in Table 6.

Table 7

Unit Nameplate Voltage	Suitable Nominal System Voltages
120	115, 120
208	208
230	220, 230, 240
277	277
380	380
415	400, 415
460	440, 460, 480
575	550, 575, 600

▼ CYLINDER LIFE

Cylinders have an average life of 1150 hours when operating at maximum output with a water supply hardness of 150 ppm. Approximate cylinder life for other water hardness may be determined by multiplying 1150 by the correction factor shown in Table 7.

Table 8

Water Hardness (ppm)	Correction Factor
50	3.00
100	1.50
150	1.00
200	0.75
250	0.60
300	0.50

Cylinder life will be extended if operated at less than maximum output. Multiply the cylinder life calculated in Table 7 by the correction factory shown in Table 8.

Table 9

% of Maximum Output	Correction Factor
100	1.00
75	1.33
50	2.00

READ AND SAVE THESE INSTRUCTIONS

CARNES®

ELECTRONICALLY CONTROLLED STEAM HUMIDIFIERS
DESIGN SERIES "E"

INSTALLATION, OPERATION AND MAINTENANCE MANUAL

CARNES COMPANY, P. O. Box 930040, 448 S. Main St., Verona, WI. 53593 — Phone: 608-845-6411 Fax: 608-845-6470 *Copyright © 1991*

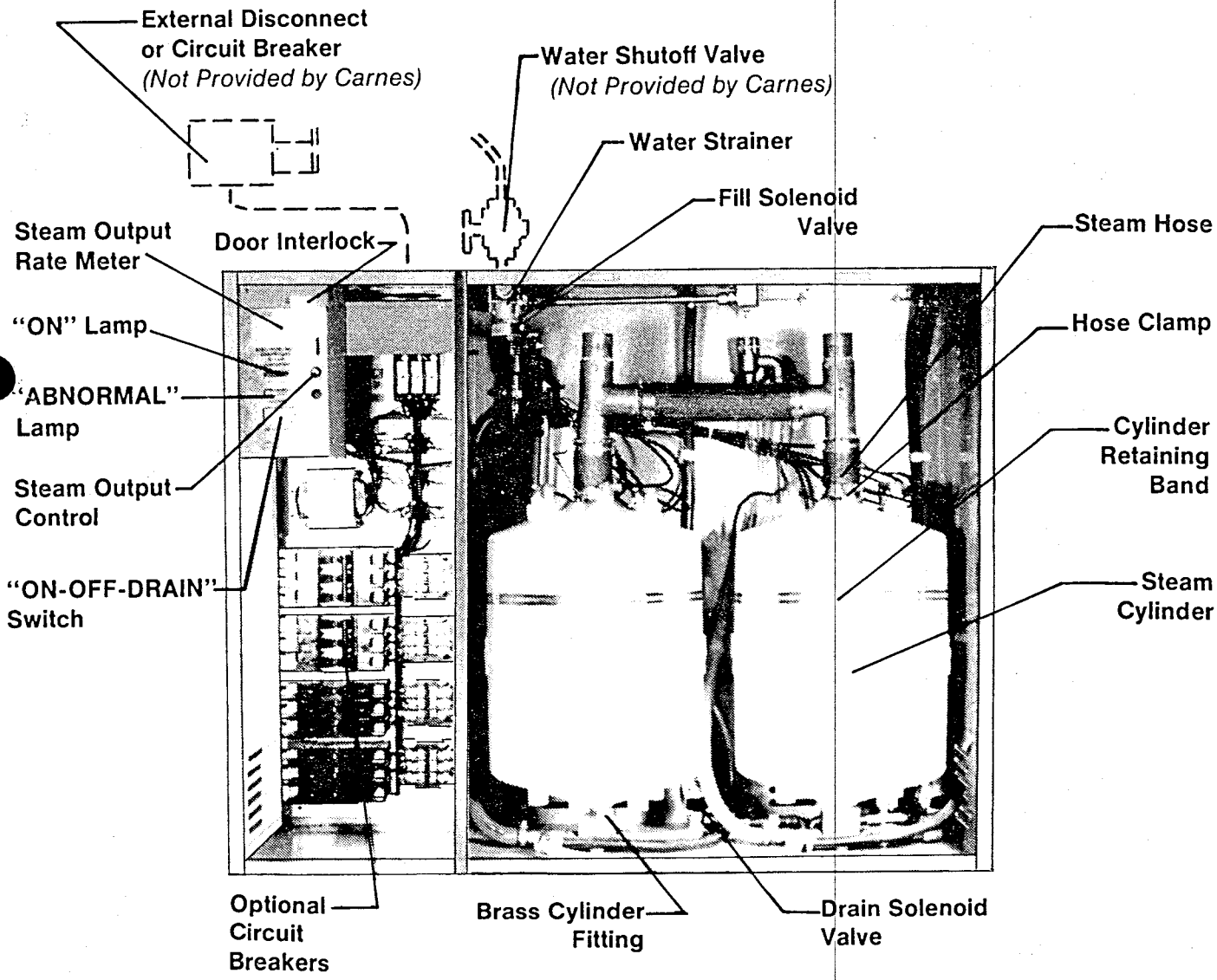

Photo A
(MODEL HBHE SHOWN)

(89/17)

INSTALLATION

UNPACKING AND INSPECTION

1. An envelope attached to the outside of the cabinet contains one cabinet key.
2. Open the cabinet and check for concealed shipping damage. Report any damage immediately to the carrier who delivered shipment.
3. The following components are packed in a shipping carton for connection when installing humidifier:
   A. Distributor pipe.
   B. Steam hose.
   C. Condensate return line.
4. Optional accessories may be packed with the cabinet or in the same shipping carton. Large accessories may ship in separate cartons.
5. Inside the cabinet is an envelope containing the following items:
   A. Steam hose clamps.
   B. Condensate return line clamps.
   C. Air gap drain fitting.
   D. Installation instructions.

MOUNTING THE HUMIDIFIER

Mount the humidifier cabinet securely on a level and plumb surface near the ductwork. Allow 6" or more on each side for proper ventilation and a minimum of 16" from the bottom of the cabinet to the floor to allow space for the drain connection. The humidifier must never be mounted outside or where it may be exposed to freezing temperatures. Maximum operating weights for the humidifiers are shown below.

Table 1 — **MAXIMUM OPERATING WEIGHT**

MODEL	POUNDS
HBAE, HCAE	80
HBDE, HCDE	85
HBGE, HCGE	105
HBHE, HCHE	185

WATER SUPPLY CONNECTION

Use ordinary tap water (20 to 120 psi) —**DO NOT use hot water, deionized water, or water that has been treated by a water softener without consulting the factory.** A 3/8" FPT fitting is provided at the top of the humidifier for connection to tap water supply. A shut-off valve, not provided by Carnes, must be installed just ahead of this fitting.

DRAIN LINE CONNECTION

1. Remove the large nut and plastic gasket located on the fitting on the bottom of the cabinet *(Photo B)*. The nut and gasket may be used with standard type drain fitting if an air gap drain fitting is not required by local codes.
2. Connect the air gap drain fitting to the cabinet drain connection. It may be necessary to cut off some of the air gap fitting depending on available space.
3. Connect the drain or air gap fitting to S or P Trap. Use plumbing material capable of handling hot water. **Note:** *If the drain water pump accessory package is used, follow instructions included with the drain water pump package.*

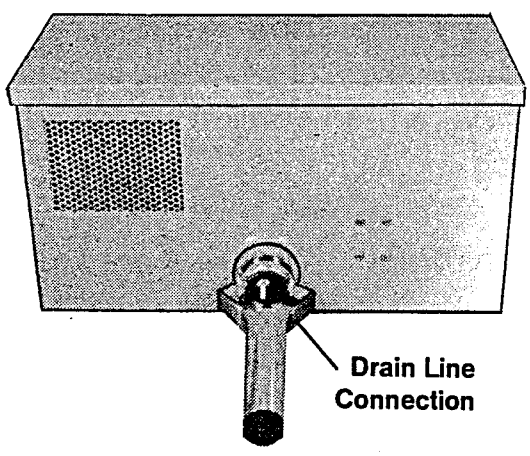

Photo B

Table 2 — **FASTENER RECOMMENDATION**

TYPE OF WALL	6 FASTENERS REQUIRED (Models HBAE, HCAE, HBDE, HCDE, 8 FASTENERS REQUIRED (All Other Models)
Wood Studs or Solid Wood	1/4" Lag Screws, 1" minimum length
Hollow Plaster	1/4" Molly Bolts or Toggle Bolts, 3" minimum length
Sheet Metal	1/4" Thread Forming Screws, 1/2" minimum length
Cement or Masonry	1/4" Lead Type Anchor and Bolts, 1½" minimum length

STEAM DISTRIBUTOR PIPE LOCATION

Each steam cylinder in two-cylinder units requires a separate steam distributor pipe, steam hose, and condensate return line. The distributor pipes from one humidifier are intended to serve one duct or multiple ducts if the pressures are the same. Only one humidistat is required for each humidifier as all circuits in two-cylinder units operate simultaneously.

In a typical installation the humidifier is located below the duct as shown in *Figure A*. It is recommended that the length between the humidifier cabinet and the steam distributor pipe in the duct be the minimum possible distance. Refer to *Table 3* for maximum lengths that may be installed.

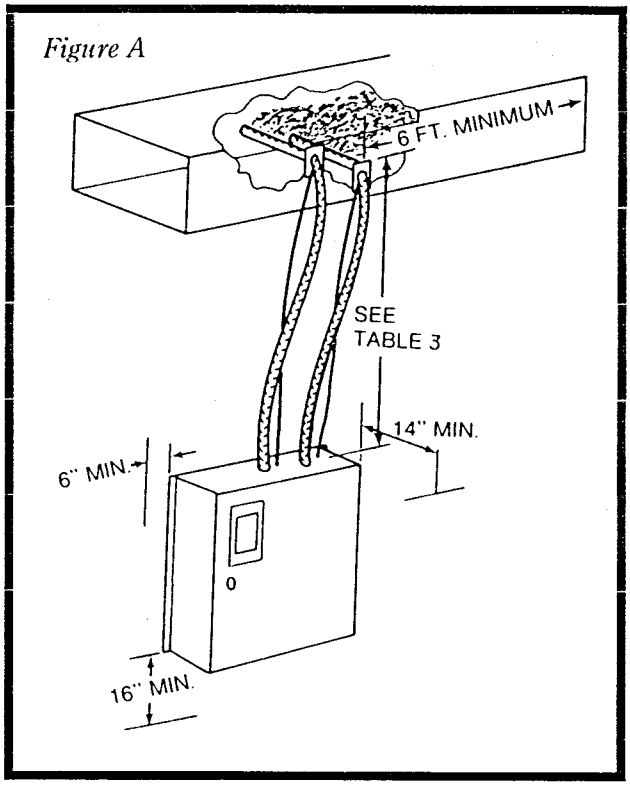

Table 3
MAXIMUM STEAM HOSE LENGTHS

Duct Static Pressure "wg	0	1	2	3	4	5
Maximum Steam Hose Length (Ft.)	40	35	30	25	15	10

The maximum length of steam hose that may be installed as shown in *Figure A* is 12 feet. For steam hose lengths over 12 feet refer to *Figure B*.

A drain "T", as shown in *Figure B*, must be used to remove condensation that occurs in steam hose lengths over 12 feet. It is preferable to have the steam hose rise vertically from the cabinet and then slope toward the distributor pipe as shown. If sufficient head room is not available, it is possible to install with an upward slope to the hose.

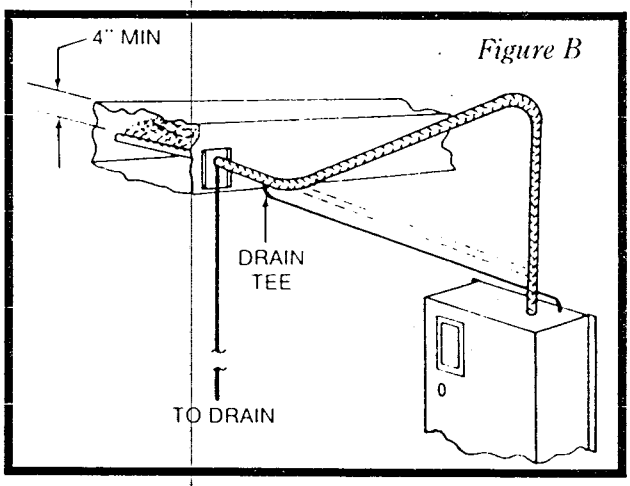

If air flow is vertical, the steam distribution pipe should be installed horizontally *(Figure C)*.

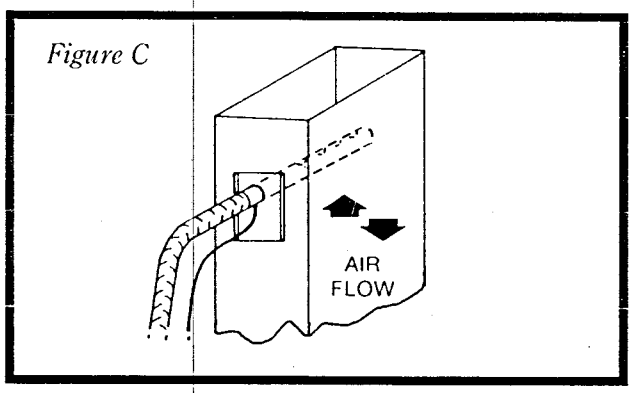

In two-cylinder units the pipes should be staggered as shown in *(Figure D)*.

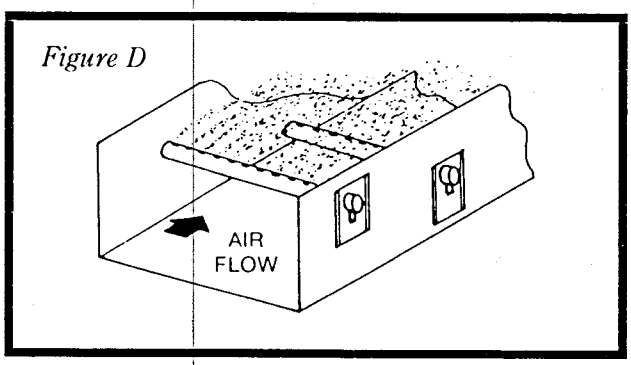

STEAM DISTRIBUTOR PIPE LOCATION *(Continued)*

Steam distributor pipes must be located on a plumb surface. This is required so the condensate which forms in the distributor pipe will drain to the return line and back to the unit.

Steam distributor pipes should be mounted in the duct to insure even distribution of steam across the center portion of the duct. The condensate return line must always be kept on the bottom. A minimum clearance of 4" must be maintained between top of the duct and distributor pipe.

The steam distributor pipes should be located in the supply air stream, downstream of the fan. When installed in packaged units (central station air handlers, multizone units, make-up air units, etc.) the distributor pipe should be mounted just downstream of the fan discharge in the primary air stream.

In multizone applications it is preferable to have a separate humidifier serving each zone. However, steam can be introduced into the hot deck upstream of the zone dampers. In this case, good distribution of steam across the entire hot deck is very important.

The steam distributor pipe may be located below the humidifier if the installation is made in accordance with *Figure E.* A trap must be installed as shown to prevent steam from flowing back through the condensate return line.

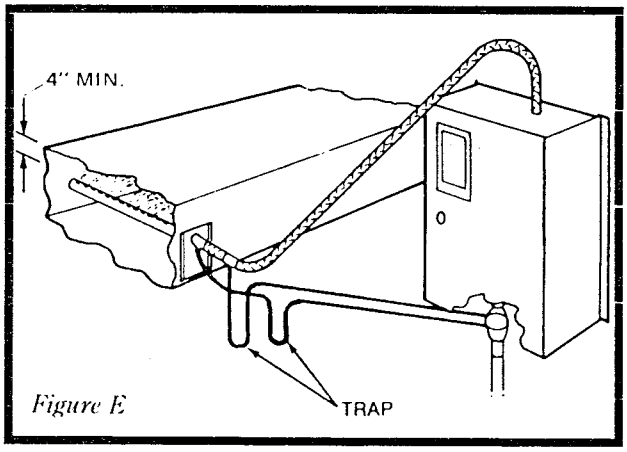

Figure E

It is preferable to locate the steam distributor pipes downstream from any obstructions in the ductwork so that air can absorb moisture before it impinges on a surface and accumulates. There must be a *minimum* of six feet between the steam distributor pipes and any fans, coils, filters, zone dampers, elbows or outlets which may be installed downstream of the distributor pipe. However, in all cases, the steam distributor pipes should be located as far upstream from any such obstruction as possible.

It is very important that the steam hose is installed so that sags in the hose are prevented. Because the steam is at very low pressure it cannot overcome resistance caused by water standing in the steam hose. The steam hose is flexible so it must be supported adequately to prevent any low point from occurring. The steam hose and condensate return line must have a continuous pitch so that standing water will not develop.

If it is difficult to install the steam hose to prevent sags, it is recommended that copper tube be used as a substitute. If copper tube is used, a minimum of one inch of insulation must be applied to prevent excessive condensation. A short length of steam hose should be used to connect to the cylinder on the humidifier and another short length to connect to the steam distributor pipe. Size 3/4" copper tube can be used with steam cylinders having output rates of up to 30 pounds of steam per hour. Size 1½" copper tube should be used with steam cylinders over 30 pounds per hour. The condensate return line which connects the outlet on the steam distributor pipe to the inlet on the top of the humidifier also must be supported to prevent sags that would restrict the flow of water.

INSTALL STEAM DISTRIBUTOR PIPE

EACH CYLINDER REQUIRES SEPARATE STEAM HOSE, CONDENSATE RETURN LINE, AND STEAM DISTRIBUTOR PIPE.

1. Steam distributor pipe must be mounted on a plumb surface. When on a plumb surface the standard distributor pipe is inclined upward. This is required so the condensate which forms in the distributor pipe will drain to the return line and back to the unit.
2. Insert distributor pipe into duct and secure tightly with four sheet metal screws, not provided by Carnes.
3. Special distributor pipes are shipped with specific instructions on how to mount them.
4. If the accessory fan distribution unit is to be used, follow the instructions included with the unit.

CONNECTING THE STEAM HOSE

COPPER OR BRASS TUBE IS THE ONLY ACCEPTABLE SUBSTITUTE FOR CARNES STEAM HOSE OR CONDENSATE HOSE

1. The steam hose should be installed so there is a continuous rise from the himidifier to the distributor pipe. Support the steam hose at intermediate points to prevent dips or pockets.
2. Any turns should have a minimum radius of 8" to prevent the hose from kinking.
3. Fasten the steam hose to the distributor pipe with one of the hose clamps provided.
4. Push the steam hose through the opening on the top of the humidifier cabinet and slip over the outlet stub on the top of the cylnder, or over the copper fitting in 2 cylinder models. Fasten with the hose clamp provided.

CONDENSATE RETURN LINE

1. Fasten the condensate return line to the distributor pipe with the hose clamp provided.
2. Follow the steam hose to the himidifier cabinet and secure the return line to the steam hose.
3. Connect the return line to the condensate return inlet with hose clamp provide.
4. If it is impossible to maintain a drop to the top of the cabinet, it is necessary to run the condensate return line directly to the air gap drain fitting or some other drain.

ELECTRICAL CONNECTIONS

POWER MUST BE OFF BEFORE MAKING ANY ELECTRICAL CONNECTIONS

Check unit electrical characteristics on label on outside of cabinet. It must agree with the power provided to the unit. If it does not, contact your Carnes representative.

A fused disconnect or circuit breaker not provided by Carnes, **MUST** be installed per local and national electrical codes. See *Table 4* for recommended circuit ratings. The optional circuit breaker switch in the humidifier is **NOT** for use as a disconnect switch.

1. Remove screws securing electrical cover panel for access to wiring.
2. An opening is provided on the top of the electrical section. Bring electric power wires through ths opening and connect to electric power terminals.
3. Connect cabinet ground terminal to an independent ground. **DO NOT** use the neutral of a four-wire power supply.
4. Replace electrical cover panel.

NOTES:

"Model" and **"Opt. Circuit Breaker"** columns designate presence, quantity and amp rating of optional circuit breakers. All models preceded by **"HC"** have overload protection provided by the electronic circuit board. In addition, as an option, internally mounted, switchable on-off, circuit breakers are available in models preceded by **"HB"**.

"Max Lb./Hr." designates maximum capacity of humidifier. Units are shipped from the factory preset at the maximum rate. The output rate may be easily reset after installation anywhere between 100% and 25% of maximum capacity.

"KW" rating shown is at maximum output rate. If a unit is reset for less than maximum output, the KW is reduced proportionally.

"PH" and **"Volt"** designate available phase and nominal voltages. Single phase units may be operated from two legs of a three phase supply but the load will be unbalanced.

"Line Amp" and **"Disc. Size"** are amp ratings shown for use in selecting electrical service requirements.

"Steam Cylinder" column shows the quantity and model of steam generating cylinders mounted in the humidifier. In two cylinder units both cylinders operate simultaneously. Each cylinder requires its own steam distribution pipe, steam hose and condensate return line.

ELECTRICAL DATA — *Table 4*

Model	Max. Lb./Hr.	K.W.	Ph.	Volt	Line Amp	Disc. Size	Opt. Circuit Breaker	Steam Cylinder
HBAE HCAE	5	1.7	1	120	14.4	20	1-20	1-AX220
				208	8.3	15	1-15	1-AX380
				230	7.5	15	1-15	1-AX380
				277	6.2	15	1-15	1-AX380
				460	3.7	15	1-15	1-AX700
				575	3.0	15	1-15	1-AX700
	10	3.4	1	120	28.7	40	1-40	1-AX220
				208	16.6	25	1-25	1-AX380
				230	15.0	20	1-20	1-AX380
				277	12.4	20	1-20	1-AX380
				460	7.5	15	1-15	1-AX700
				575	6.0	15	1-15	1-AX700
HBDE HCDE	20	6.9	1	208	33.1	45	1-45	1-B500
				230	29.9	40	1-40	1-B500
				277	24.9	35	1-35	1-B500
				460	15.0	20	1-20	1-B700
				575	12.0	15	1-15	1-B700
	20	6.9	3	208	19.1	25	1-25	1-B500
				230	17.3	25	1-25	1-B500
				460	8.6	15	1-15	1-B700
				575	6.9	15	1-15	1-B700
	30	10.3	3	208	28.7	40	1-40	1-B500
				230	25.9	35	1-35	1-B500
				460	13.0	20	1-20	1-B700
				575	10.4	15	1-15	1-B700
HBGE HCGE	30	10.3	1	208	49.7	70	2-35	1-C62
				230	44.9	60	2-30	1-C62
				277	37.3	50	2-25	1-C62
				460	22.5	30	1-30	1-C65
				575	18.0	25	1-25	1-C65
	40	13.8	3	208	38.2	50	2-25	1-C62
				230	34.6	45	2-25	1-C62
				460	17.3	25	1-25	1-C65
				575	13.8	20	1-20	1-C65
	50	17.2	3	208	47.8	70	2-35	1-C62
				230	43.2	60	2-30	1-C62
				460	21.6	30	1-30	1-C65
				575	17.3	25	1-25	1-C65
	60	20.7	3	208	57.4	80	2-40	1-C62
				230	51.9	70	2-35	1-C62
				460	25.9	35	1-35	1-C65
				575	20.8	30	1-30	1-C65
	80	27.5	3	460	34.6	50	2-25	1-C12
				575	27.7	35	2-15	1-C12
	100	34.4	3	460	43.2	60	2-25	1-C12
				575	34.6	45	2-20	1-C12
HBHE HCHE	80	27.5	3	208	76.5	100	4-25	2-C62
				230	69.2	90	4-25	2-C62
	100	34.4	3	208	95.6	125	4-35	2-C62
				230	86.4	125	4-30	2-C62
	125	43.0	3	208	119.5	175	4-40	2-C62
				230	108.0	150	4-35	2-C62
				460	54.0	70	4-15	2-C12
				575	43.2	60	4-15	2-C12
	150	51.7	3	460	64.8	90	4-25	2-C12
				575	51.9	70	4-20	2-C12
	175	60.3	3	460	75.6	100	4-25	2-C12
				575	60.5	80	4-20	2-C12
	200	68.9	3	460	86.4	125	4-35	2-C12
				575	69.2	90	4-25	2-C12

CONTROLS

CONTROL OPTIONS — *Figure F*

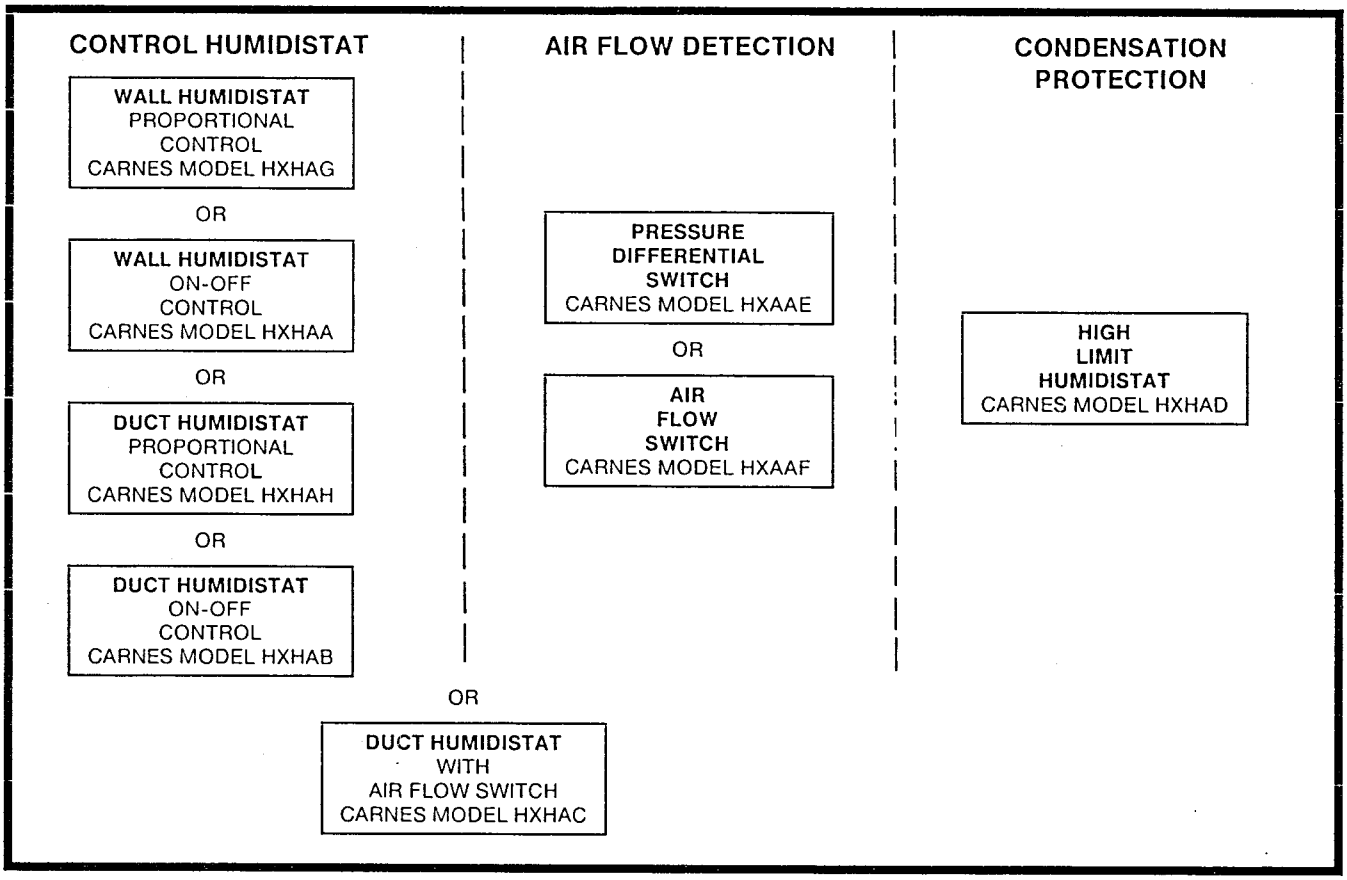

CONTROL HUMIDISTAT

If an on-off humidistat is used the humidifier will generate steam at the preset output rate and cyle on or off as necessary to satisfy the conditioned area requirements. All humidifiers are preset at the factory for the maximum rating of the unit. The output may be easily reset in the range of 25-100% by adjusting the control located on the front of the electronic control module.

If Carnes proportional humidistat is used the humidifier will automatically vary the steam output rate in the range of 25-100% of the humidifiers maximum rating in response to the signal from the humidistat. The steam output control mentioned above may also be used to limit the maximum output if desired. Proportional control provides less cycling of the humidifier.

Either a wall humidistat or duct mounted humidistat in the return air may be used. The wall mounted humidistat is the most common as it allows the setting to be easily changed to accomodate changing requirements or to lower the relative humidity in the space to prevent condensation on windows during extremely cold weather. In applications where is may be desirable to prevent the occupants of a space from changing the setting, a duct mounted humidistat in the return air may be used. This is normally mounted in the equipment room or in the duct where it is accessible only to maintenance personnel.

AIR FLOW DETECTION

The humidifier control circuit should include some method to determine air flow. If the steam distributor pipe is located in a duct where these is no air flow and the control humidistat is calling for humidity, steam would be discharged into the duct where it would immediately condense. Air flow may be detected by several methods. The humidistat circuit may be interlocked by using a fan relay if the fan is direct driven. A fan relay is not recommended if a belt driven fan is used a a broken belt would stop air flow even though the fan relay was closed.

Among the alternatives are the use of a pressure differential switch that determines air flow by sensing a pressure differential caused by air movement in the duct. A paddle type switch is also available to determine air flow. The pressure differential switch is normally the preferred device as it is less susceptible to erratic operaton caused by improper positioning in the duct system. Paddle type switches require careful positioning in the duct to insure sufficient air flow to activate the switch. A combination return air duct on-off humidistat and sail switch is available but care must be taken during installation to insure proper operation.

CONDENSATION PROTECTION

A third device may be desirable to provide condensation protection in the duct system. A high limit humidistat may be installed ten feet downstream from the steam distributor pipe. This humidistat is normally set for 90-95% RH and opens the circuit if the humidity level in the duct exceeds the set point. Use of this device is recommended particularly when the humidifier is used in applications where cooling air is being humidified or where a VAV system may throttle back to a point where air flow is insufficient to absorb the steam being introduced.

CONTROL CONNECTIONS

FIELD WIRING TERMINAL BOARD — *Figure G*

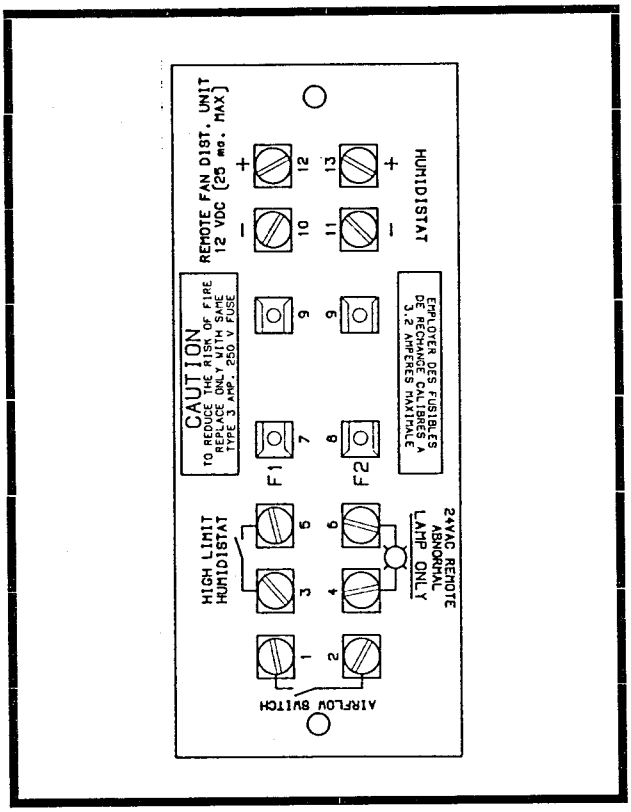

The control humidistat is connected to terminals 11 and 13 on the field wiring terminal board. The (+) and (-) markings are not significant unless a signal is being supplied by an external humidity transmitter. The air flow detection control should be connected to terminals 1 and 2. If an air flow detection control is not used a jumper must be installed between terminals 1 and 2. If a high limit humidistat is used it should be connected to terminals 3 and 5. If it is not used a jumper must be installed.

A 24 volt AC signal is provided by the humidifier circuit board to terminals 4 and 6 to indicate the need for service. This signal is provided whenever the output is less than 50% of the desired rate. Maximum current available at terminals 4 and 6 is 1/2 Amp. It is not necessary to connect any device to these terminals but a jumper must never be connected.

A 12 volt DC signal is supplied to terminals 10 and 12 whenever the humidifier is operating and is used to activate an electronic relay to start the fan motor in Carnes optional fan distribution unit. Maximum current available at terminals 10 and 12 is 25 mA.

EXTERNAL CONTROL SIGNALS

Carnes Humidifiers can also accept a 0-10 volt DC signal to modulate the output of the humidifier. Selection of this type of signal is made by switch S2 on the humidifier circuit board. In the standard position any on-off or Carnes proportional humidistat can be used. In the alternate position, signified by "V" in the humidifier model number, a 0-10 volt DC signal may be supplied to terminals 11 and 13. Polarity must be observed and terminal 11 is a chassis ground. Input impedence is 100K ohms. The position of switch S2 may be easily changed anytime if a change in control systems is desired.

Recalibration for input voltages other than 0-10 volt is possible. Consult the factory for ranges and calibration procedure. If a 4-20 mA. input signal is provided to the humidifier a 470 ohm resistor must be installed across terminals 11 and 13.

HUMIDIFIER CIRCUIT BOARD — *Figure H*

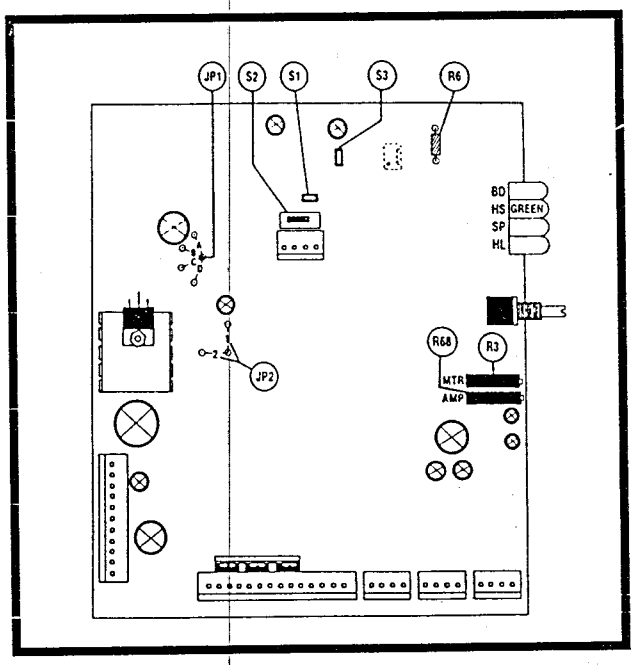

CONTROL CONNECTIONS

IMPORTANT: TURN OFF POWER AT EXTERNAL DISCONNECT BEFORE MAKING ANY CONNECTIONS TO PREVENT POSSIBLE DAMAGE TO ELECTRONIC CIRCUIT BOARD.

1. A 7/8" opening is provided on the top of the cabinet. The control wiring should pass through the opening to the terminal strip *(Figure G)*.

   NOTE: *A built-in transformer provides power for the control circuit. No outside power supply is required for the control circuit.*

2. If an air flow switch or high limit humidistat is not used, jumpers must be installed before the humidifier will operate.

OPERATION

Carnes state of the art electronic circuit board controls all functions within the humidifier to provide the highest energy efficiency available. The circuit board is mounted in a control module containing a steam output meter calibrated directly in pounds per hour, an "on" light, and "abnormal" operation light that indicates the need for maintenance.

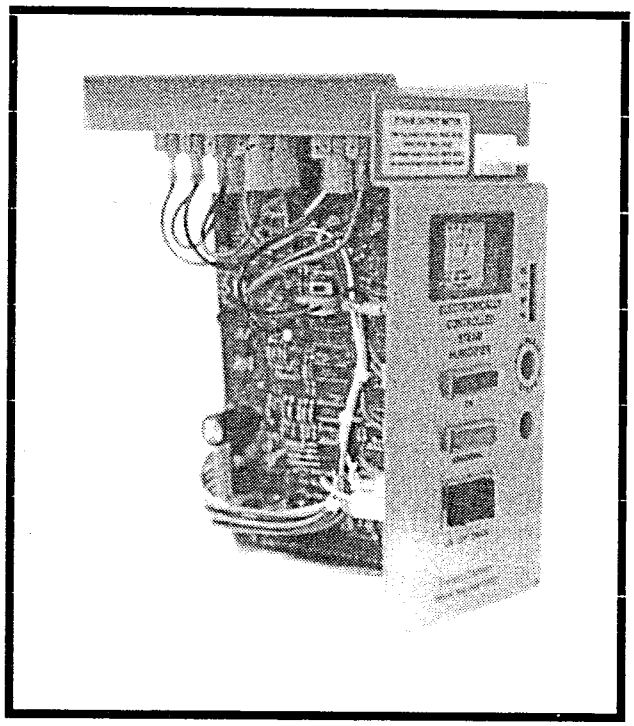

Upon a signal from an external humidistat the circuit board opens a make-up water solenoid valve, allowing water to flow across an air gap into a standpipe . The standpipe provides a column of water to be fed into the cylinder using gravity. The air gap prevents back flow into the water supply and prevents the cylinder from becoming a pressure vessel. The steam cylinder operates at a pressure of approximately 1/2 psi.

The circuit board also closes a power contactor allowing current to flow to vertical electrodes sealed inside the cylinder. Current flows between the electrodes using minerals in the water as a conductor. The water is heated to boiling and converted to steam which leaves the cylinder through the flexible steam hose which is connected to the steam distributor pipe.

The circuit board reacts to current flow between the electrodes and automatically opens the make-up solenoid valve when more water is required to maintain the desired output rate, and close when the desired rate is reached. The operation of the drain solenoid valve is automatically controlled by the circuit board which responds to any changes in water conditions and drains the required quantity of water to provide stable operation and long cylinder life.

Current flow in each leg of a three phase circuit is monitored and in the event of overcurrent the contactor is opened to disconnect power to the cylinder. The drain solenoid is opened automatically to reduce water and current levels and the humidifier resets for normal operation. If current levels are not reduced to normal levels the circuit board opens the contactor and indicates an overcurrent condition by flashing the abnormal light.

Figure H

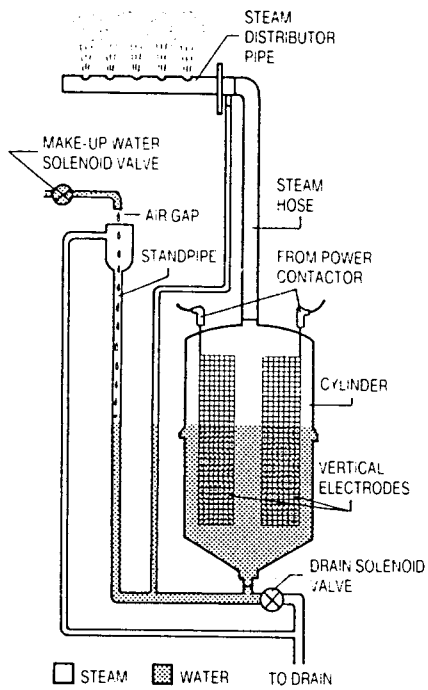

As mineral deposits build up within the cylinder the water level will slowly rise to uncovered electrode surfaces to maintain the desired steam output rate. When mineral deposits have covered all available electrode surface areas, current flow will be reduced to a level where the desired steam output cannot be reached and the abnormal light will signal the need for maintenance. When the cylinder is filled with minerals it is easily changed in less than five minutes.

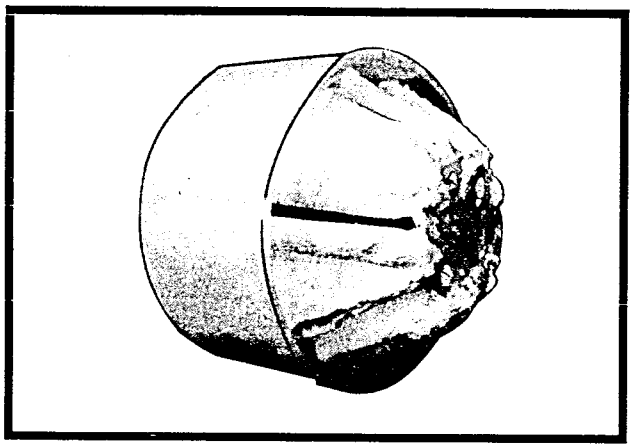

START UP

While the external disconnect switch is off, be sure terminal connectors are firmly secured to the top of the cylinder.

1. Open all water supply valves external to unit.
2. Turn external disconnect switch to "On" position.
3. In units with optional circuit breakers, turn circuit breaker(s) to "On" position.
4. For safety, door interlock disconnects power to cylinder(s) when door is open. Humidifier may be operated for service purposes when door is open by pulling out white button located above the meter. **CAUTION: High Voltages Are Present.**
5. Turn "On-Off-Drain" switch to "On" position. Green "On" light should now be on.
6. Unit will now be in operation if humidistat is calling for humidity. If humidistat is not calling for humidity, adjust humidistat control upward to check operation.
7. When humidistat is calling for humidity water will slowly flow into cylinder. Steam output meter will slowly rise as water enters cylinder.
8. The "Abnormal" light will remain on until sufficient water has entered cylinder to provide 50% of set output. **NOTE:** *Unit has been preset at factory for maximum output as shown on label on bottom left side of humidifier.*
9. When high level or full output is reached, the fill solenoid valve will close.
   NOTE: *When starting unit with new cylinder the "Abnormal" light may come on and the drain solenoid valve and contactor may open for brief periods until water has come to full boil.*

LOW CONDUCTIVITY OPERATION

In areas where water conductivity is low, full output may not be reached until humidifier has conditioned water.

1. If water comes in contact with the high level probe at the top of the cylinder (red wire), the fill valve will automatically close.
2. Water will boil and slowly drop below high level probe.
3. When water drops below probe, fill valve will reopen until probe is activated again.
4. Process will continue to occur until sufficient minerals have accumulated to allow full output.

AUTOMATIC DRAIN CYCLE

The electronic circuit board controls the drain solenoid valve to drain a portion of the water from the steam cylinder.

1. As water boils away in the cylinder, a timer (indicated by "BD" light) is activated as current falls to 95% of setpoint.
2. The timer runs for a predetermined time until 90% of setpoint is reached.
3. If rate of change of currect occurs too rapidly, the drain solenoid will open to drain mineral rich water from the cylinder.
4. Fill valve will automatically reopen to refill cylinder to proper current level.

ADJUSTING STEAM OUTPUT RATE

Steam output is regulated by adjusting steam output control *(Photo C)*.

To change steam output:

1. Drain water from cylinder by turning "On-Off-Drain" switch to "Drain" position.
2. Turn steam output rate control fully clockwise.
3. Turn "On-Off-Drain" switch to "On" position. Steam output rate will gradually increase as shown on steam output rate meter. When desired output is reached, slowly turn counter clockwise until inlet water valve closes and stops incoming water.

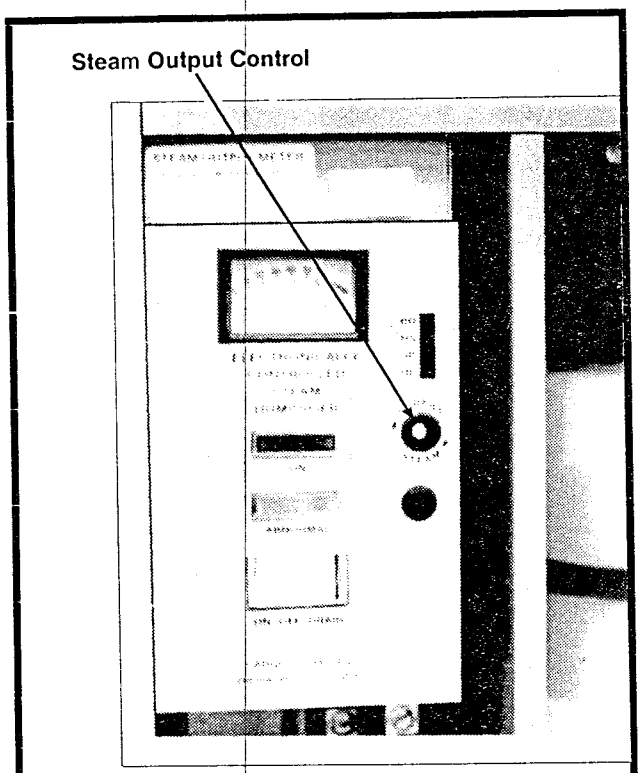

Photo C

TROUBLE SHOOTING

SYMPTOM: Water In Duct

POSSIBLE SOLUTIONS: This is usually an installation problem. First step is to determine if water is spitting from the steam distributor pipe or if steam is condensing on some object in the duct or on the duct itself.

If water is spitting from the steam distributor pipe there may be several causes:

1. The steam hose and condensate return lines **MUST** have continuous slopes without **ANY** sags or pockets that could accumulate water. If water accumulates in the steam hose, it may suddenly be pushed into the distributor pipe and the condensate return line maybe unable to handle the large volume.
2. Make sure the condensate return line is not obstructed in any way. Water should flow freely, through the return line.
3. The mounting plate on the steam distributor pipe must be plumb on the duct to obtain the proper pitch on the portion inside the duct. If the portion inside the duct is tilted downward condensate cannot flow away from the duct.
4. If the condensate return line has a very small pitch down from the distributor pipe to the humidifier cabinet, (less than 1 foot) it may be better to go to a drain below the cabinet rather than connecting at the top of the cabinet.

If water is condensing on an object in the duct or on the duct itself it will be necessary to take other steps:

1. The distributor pipe must be mounted **AT LEAST** 6 feet from any elbow, split, coil, turning vane, grille or diffuser. The lower the air temperature is in the duct the further upstream the pipe must be located. If the air temperature is 55° it may be necessary to have 10 feet between the pipe and any obstruction.
2. It may be that the air simply can't hold the volume of steam that is being introducted into it. Normally the only practical solution is to reduce the steam output of the humidifier as it usually not feasible to increase the air temperature or quantity.

SYMPTOM: "Arcing" or "Sparking" in Steam Cylinder

POSSIBLE SOLUTIONS: Occasional arcing is not a problem. When a cylinder is restarted after a period of off time arcing may occur as chunks of mineral flake off the electrode surface. During a drain cycle arcing may occur if water is very low in the cylinder. Arcing is not a problem unless it occurs almost constantly and causes considerable discoloration in the cylinder.

MANY ITEMS CAN CAUSE ARCING:

1. *Incoming water with high conductivity.*
   Conductivity, the ability to conduct current, is measured in "micromhos". In any electrode type humidifier there are maximum values of conductivity that maybe used in the humidifier. Maximum conductivities are shown in catalog HB-02.

   If the water has been treated by a water softener, it's conductivity will be higher than if it is untreated. Soft water may be too high in conductivity to operate without arcing.

2. *Build up of conductivity of water inside cylinder.*
   Arcing can occur if incoming water conductivity is acceptable but other problems allow the conductivity inside the cylinder to increase beyond its design capabilities. This may be caused by:

   A. Drain lines that have become restricted by mineral deposits prevent proper drain rates. This allows minerals to concentrate inside the cylinder which cause low water levels and therefore arcing. Drain lines should be inspected when cylinders are changed and thoroughly cleaned if necessary.

   B. A defective drain solenoid valve will prevent proper draining. Disassemble and clean the parts. The solenoid coil should be checked to verify its condition. If the "drain" switch is placed in the drain position both the fill solenoid and drain valves should open.

   C. A defective component or wiring harness may prevent the solenoid from operating. If the drain valve operates in the manual drain position the wiring harness is good but the circuit board may be defective. If the drain valve won't operate in the drain position either the valve or wiring harness may be at fault. Check crimped on connectors for good connections. The best method to check the circuit board is to substitute a board known to be good.

   D. Insufficient quantity of incoming water will cause arcing by causing low water levels. In electronically controlled units a drain is never initiated until a set point is reached. Therefore if low water pressure at the unit (Below 20 PSI) or a clogged water strainer restricts the flow of water, arcing will result. High backpressure caused by an obstruction in the steam hose, excessive lengths of steam hose, or excessive duct static pressure will also prevent the cylinder from reaching its set point and initiating a drain.

   E. Frequent cleaning of the cylinder can dislodge flakes that will cause blockage and prevent draining. It is not recommended that the cylinder be removed except for replacement.

SYMPTOM: Drains Continuously

POSSIBLE SOLUTIONS: The first step is to determine whether water is overflowing from the fill cup or flowing through the drain solenoid valve. It's important to check closely since both conditions appear identical but have much different causes.

1. The most common cause is to have a piece of sediment in the drain solenoid valve that prevents the valve from closing properly. By turning the unit back and forth between "on" and "drain" it may be possible to dislodge the sediment. In extreme cases it may be necessary to disassemble drain lines to clean them.
2. If dirt in the valve is not causing the problem, disconnect one of the wires connected to the solenoid coil. If draining stops this indicates the circuit board is causing the valve to operate. The circuit board is defective if it is sending an improper signals to drain and should be replaced.
3. If water continues to drain with the wire to the solenoid disconnected the valve is defective and should be cleaned or replaced.
4. If water is flowing to the drain from the overflow tube coming from the full cup it is usually caused by an obstruction in the water line between the fill cup and cylinder or in the same hose from the cylinder to the steam distributor pipe. All lines and steam hoses should be checked to eliminate any obstructions.

SYMPTOM: Humidifier Won't Turn On

I. Verify Power is supplied to unit
   A. Verify green "on" light is lit.
      1. If no light, check:
      — Incoming high voltage and circuit breaker
      — 24 VAC on secondary of power transformer
      — Fuse (F2) on control module
         a. Secondary options
         — Lamp burned out
         — Miswire or bad connection in module harness
         — Harness not plugged into board properly
         — Defective control board
         — Bad ON-OFF switch
   B. Verify green (HS) LED is lit
      1. If no LED, check
      — High limit humidistat can be jumpered
      — Air flow switch can be jumpered
      — Humidistat can be jumpered
      — Fuse (F1) on control module
      — (S2) switch in wrong position *(See page 7, Figure H)*
         a. Secondary options
         — Door interlock switch can be jumpered
         — Miswire or bad connection in module harness
         — Harness not plugged into board properly
         — Defective control board

SYMPTOM: Humidifier Won't Fill

I. Verify fill and drain activate with switch in the DRAIN position
II. Verify red (HL) LED is off
   A. If LED is on, check
      1. Water level too high in cylinder
         a. Water conductivity very low
         b. Cylinder needs replacing
         c. Miswire of high voltge electrode wires
         d. Foaming water (flush out cylinder)
      2. Defective high level circuit
         a. Internal short in cylinder
         b. Defective control board
         c. Defective high level sensor
         — Disconnect low voltage wires (blue), and verify fill
         — Verify no miswire of sensor
      3. High level timer triggered on board—wait 2 minutes
III. Check incoming water line, filter, and flow regulator

SYMPTOM: Humidifier Won't Satisfy Space

I. Unit capacity too small
II. High limit humidistat too close to distribution pipe resulting in tripping
III. Duct air capacity or temperature too low resulting in trip of high limit
IV. Customer steam potentiometer set too low.
V. Clogged drain system may result in less than 100% output

MAINTENANCE

NOTE: *It is advisable to inspect the humidifier visually at approximately two week intervals.*

UNIT MAINTENANCE

1. For safety, door interlock disconnects power to cylinder(s) when door is open. Humidifier may be operated when door is open by pulling out white button located above the steam output meter. **CAUTION: HIGH VOLTAGES ARE PRESENT.**
2. Green "On" light should be on whenever power is supplied to the humidifier, and "On-Off-Drain" switch is in "On" or "Drain" position. If green light is **NOT** on, check the following items:
   a. If unit has optional internal circuit breakers they must be in"On" position.
   b. Check each incoming power wire for proper voltage as shown on humidifier rating plate. **CAUTION: HIGH VOLTAGES ARE PRESENT.**
   c. Check green "On" light bulb (24 volt) using voltmeter.
3. When amber "Abnormal" light is *continually* on check the following items: **NOTE:** *Abnormal light will occasionally be on for short periods of time during operation such as initial startup, during a drain cycle and whenever the switch is in "Drain" position.)*
   a. Clean water strainer.
   b. All valves in water supply must be open and water pressure above 20 psi.
   c. Check drain to be sure water is not constantly draining. Disassemble and clean drain if necessary.
   d. Replace cylinder if desired output cannot be reached.
   e. Check incoming power wire for proper voltage as shown on humidifier rating plate. **CAUTION: HIGH VOLTAGES ARE PRESENT.**
   f. Check voltage at fill solenoid valve. Replace if 24 volts are present but valve is not open.
   g. Check steam hose for any restriction.
4. When amber "Abnormal" light is flashing it indicates that excessive current has occurred.
   a. Turn "On-Off-Drain" switch to the "Drain" position. If water does not drain from cylinder disassemble and clean drain.
   b. If water drains from cylinder, turn switch back to "On" position and allow unit to operate.
   c. Mineral build-up in the cylinder, may have caused a short. If this has occurred, replace cylinder.
5. Lights on electronic control module above the "Increase Steam" control are labeled as follows:

   "BD" Used for factory calibration only.
   "HS" If the green light is on it indicates that the humidistat and other external controls are closed and are calling for humidification.
   "SP" Used for factory calibration only.
   "HL" Red light indicates water is touching probe at the top of the cylinder. May be on during initial startup. May also be on when cylinder is full of minerals and needs replacement.

CLEANING WATER STRAINER

1. Turn "On-Off-Drain" switch to "Off".
2. Turn circuit breakers to "Off". (Optional circuit breaker units only)
3. Shut off water supply valve ahead of unit.
4. Remove brass nut by turning counter-clockwise. (A small amount of water will drain when nut is removed. Use small container to catch this water).
5. Rinse strainer screen to remove deposits.
6. Reinstall screen, nut, and gasket in strainer housing.
7. Return unit to service.

CHANGING STEAM CYLINDERS

NOTE: *On two cylinder models, both cylinders must be replaced at the same time.*

1. Turn "On-Off-Drain" switch to "Drain". Completely drain cylinder.
2. Turn circuit breakers to "Off" (Optional circuit breaker units only).
3. Slip off cylinder terminal connectors.
4. Remove steam hose.
5. Loosen cylinder retaining band.
6. Remove cylinder by turning counter-clockwise on cylinders with threaded connection. Lift cylinders up on cylinders with unthreaded connection.
7. Replace cylinder using teflon tape or pipe dope on cylinders with threaded connection. Make sure the new "O" ring is installed on the cylinder base and insert cylinders into holder with enough pressure to seat the "O" ring on cylinders with unthreaded connections.
8. Tighten cylinder retaining band.
9. Reconnect steam hose and tighten clamp.
10. Reconnect terminal connectors. **NOTE:** *Match numbers on terminal connectors with numbers on cylinders.*
11. Reconnect red high level probe wire.
12. Turn circuit breakers to "On." (Optional circuit breaker units only)
13. Turn "On-Off-Drain" switch to "On."
14. "Abnormal" light will remain on until water fills cylinder.

After replacing humidifer cylinder, order a replacement immediately. This will insure having a spare cylinder on hand when the next change is required. Order model number shown on cylinder label.

MISCELLANEOUS

If humidification is not going to be required for a long period of time, e.g. during summer cooling cycle in a comfort application, it is recommended the steam cylinders be completely drained before switching off power and closing water supply valve.

"Due to ongoing research and development CARNES reserves the right to change specifications without notice."
Copyright © 1991 Carnes Company - All Rights Reserved