Installation, Operation, and Maintenance

Remote Split System Units and Remote Chillers

Air Cooled Condensing Units

Models

RAUJ-C20	RAUJ-C40	RAUJ-C80
RAUJ-C25	RAUJ-C50	RAUJ-D10
RAUJ-C30	RAUJ-C60	RAUJ-D12

⚠SAFETY WARNING

Only qualified personnel should install and service the equipment. The installation, starting up, and servicing of heating, ventilating, and air-conditioning equipment can be hazardous and requires specific knowledge and training. Improperly installed, adjusted or altered equipment by an unqualified person could result in death or serious injury. When working on the equipment, observe all precautions in the literature and on the tags, stickers, and labels that are attached to the equipment.

October 2012

SS-SVX11H-EN

Warnings, Cautions and Notices

Warnings, Cautions and Notices. Note that warnings, cautions and notices appear at appropriate intervals throughout this manual. Warnings are provide to alert installing contractors to potential hazards that could result in death or personal injury. Cautions are designed to alert personnel to hazardous situations that could result in personal injury, while notices indicate a situation that could result in equipment or property-damage-only accidents.

Your personal safety and the proper operation of this machine depend upon the strict observance of these precautions.

Read this manual thoroughly before operating or servicing this unit.

ATTENTION: Warnings, Cautions and Notices appear at appropriate sections throughout this literature. Read these carefully:

⚠WARNING Indicates a potentially hazardous situation which, if not avoided, could result in death or serious injury.

⚠CAUTION Indicates a potentially hazardous situation which, if not avoided, could result in minor or moderate injury. It could also be used to alert against unsafe practices.

NOTICE: Indicates a situation that could result in equipment or property-damage only

Important Environmental Concerns!

Scientific research has shown that certain man-made chemicals can affect the earth's naturally occurring stratospheric ozone layer when released to the atmosphere. In particular, several of the identified chemicals that may affect the ozone layer are refrigerants that contain Chlorine, Fluorine and Carbon (CFCs) and those containing Hydrogen, Chlorine, Fluorine and Carbon (HCFCs). Not all refrigerants containing these compounds have the same potential impact to the environment. Trane advocates the responsible handling of all refrigerants-including industry replacements for CFCs such as HCFCs and HFCs.

Responsible Refrigerant Practices!

Trane believes that responsible refrigerant practices are important to the environment, our customers, and the air conditioning industry. All technicians who handle refrigerants must be certified. The Federal Clean Air Act (Section 608) sets forth the requirements for handling, reclaiming, recovering and recycling of certain refrigerants and the equipment that is used in these service procedures. In addition, some states or municipalities may have additional requirements that must also be adhered to for responsible management of refrigerants. Know the applicable laws and follow them.

⚠WARNING

R-410A Refrigerant under Higher Pressure than R-22!

The units described in this manual use R-410A refrigerant which operates at higher pressures than R-22 refrigerant. Use ONLY R-410A rated service equipment or components with these units. For specific handling concerns with R-410A, please contact your local Trane representative.
Failure to use R-410A rated service equipment or components could result in equipment exploding under R-410A high pressures which could result in death, serious injury, or equipment damage.

⚠WARNING

Proper Field Wiring and Grounding Required!

All field wiring MUST be performed by qualified personnel. Improperly installed and grounded field wiring poses FIRE and ELECTROCUTION hazards. To avoid these hazards, you MUST follow requirements for field wiring installation and grounding as described in NEC and your local/state electrical codes. Failure to follow code could result in death or serious injury.

⚠WARNING

Personal Protective Equipment (PPE) Required!

Installing/servicing this unit could result in exposure to electrical, mechanical and chemical hazards.

- **Before installing/servicing this unit, technicians MUST put on all Personal Protective Equipment (PPE) recommended for the work being undertaken. ALWAYS refer to appropriate MSDS sheets and OSHA guidelines for proper PPE.**
- **When working with or around hazardous chemicals, ALWAYS refer to the appropriate MSDS sheets and OSHA guidelines for information on allowable personal exposure levels, proper respiratory protection and handling recommendations.**
- **If there is a risk of arc or flash, technicians MUST put on all Personal Protective Equipment (PPE) in accordance with NFPA 70E or other country-specific requirements for arc flash protection, PRIOR to servicing the unit.**

Failure to follow recommendations could result in death or serious injury.

© 2012 Trane All rights reserved

Introduction

Overview of Manual

Note: *One copy of this document ships inside the control panel of each unit and is customer property. It must be retained by the unit's maintenance personnel.*

This booklet describes proper installation, operation, and maintenance procedures for air cooled systems. By carefully reviewing the information within this manual and following the instructions, the risk of improper operation and/or component damage will be minimized. It is important that periodic maintenance be performed to help assure trouble free operation. A maintenance schedule is provided at the end of this manual. Should equipment failure occur, contact a qualified service organization with qualified, experienced HVAC technicians to properly diagnose and repair this equipment.

Revision Summary

SS-SVX11H-EN

Update valve selection part numbers and wiring diagram drawing numbers.

Trademarks

Trane, Frostat and the Trane logo are trademarks of Trane in the United States and other countries. All trademarks referenced in this document are the trademarks of their respective owners.

Table of Contents

Model Number Descriptions 6
General Information 7
Unit Inspection 7
Unit Dimensions & Weights 10
Unit Clearances 10
Dimensions 11
Unit Isolation 32
Neoprene Isolators (20 - 60 Ton units) . . 32
Spring Isolators (20 - 120 Ton units) 32
Installation 34
Foundation 34
Unit Isolation 34
Leveling the Unit 34
General Unit Requirements 34
Refrigerant Piping Requirements 34
EVP Chilled Water Piping Requirements 34
Main Electrical Power Requirements . . . 35
Field Installed Control Wiring Requirements 35
Low Voltage Wiring (AC & DC) 36
Refrigerant Line Components 36
Refrigerant Piping 38
Typical Field-Installed Evaporator Piping: Dual-Circuit Examples 40
Typical Field-Installed EVP Chiller Evaporator Piping 41
Hot Gas Bypass for Commercial Comfort-Cooling Applications 41
Optional Pressure Gauges 42
Final Refrigerant Pipe Connections 43
Brazing Procedures 43
Leak Testing Procedure 44
Remote EVP Chiller 44
Field Installed Power Wiring 48
Disconnect Switch External Handle (20-120 Ton Factory Mounted Option) . . 48
Main Unit Power Wiring 49
Power Wire Sizing and Protection Device 49
Field Installed Control Wiring 52
Controls Using 115 VAC 52
Controls using 24 VAC 53
Controls using DC Analog Input/Outputs .54
Economizer Actuator Circuit 54
No System Control 55
Variable Air Volume Control (Honeywell W7100A) 60
Discharge Air Sensor (Honeywell 6RT3 or Honeywell 8RT3) Discharge Air Sensor . .62
Suction Line Thermostat 62
Night Setback 63
EVP Chiller Control 63
Outside Air Thermostat (5S57 Field Provided) 66
Constant Volume Control (Honeywell W973) — 20 - 60TUnits Only .66
System Pre-Start Procedures 70
EVP Chiller Applications 70
System Evacuation Procedures 70
Discharge Air Controller Checkout (Honeywell W7100A) 72
Discharge Air Sensor Checkout (Honeywell Sensor) 73
Economizer Actuator Checkout 73
EVP Chiller Control Checkout (Honeywell W7100G) 74
Chilled Water Sensor Checkout (Honeywell Sensor) 75
Master Energy Control Checkout 75
Zone Thermostat Checkout (Honeywell T7067) 76
Discharge Air Sensor Checkout (Honeywell 6RT1) 77
Voltage Imbalance 77
Electrical Phasing 78
Operating Principals 79
Start-Up 83
Low Ambient Damper Adjustment (Factory or Field Installed) 83
EVP Chiller Applications 83
“Air Over” Evaporator Application 83
System Airflow Measurement 84
Preliminary Expansion Valve Adjustment 84

Adding Preliminary Charge 86
Compressor Start-Up (All Systems) 86
Pressure Curves 92
Final System Setup 95
Maintenance 97
Compressor Operational Sounds 97
Scroll Compressor Failure Diagnosis and Replacement 97
Fuse Replacement Data 101
Fall Restraint - Condenser Section Roof 101
Monthly Maintenance 102
Coil Cleaning 102
Warranty and Liability Clause 104
Wiring Diagrams 105

Model Number Descriptions

20 to 60-Ton Units[1]

DIGIT 1 — UNIT TYPE

R = Condensing Unit

DIGIT 2 — CONDENSER

A = Air Cooled

DIGIT 3 — AIRFLOW

U = Upflow

DIGIT 4 — DEVELOPMENT SEQUENCE

J= Third

DIGITS 5,6,7 — NOMINAL CAPACITY

C20 = 20 Tons
C25 = 25 Tons
C30 = 30 Tons
C40 = 40 Tons
C50 = 50 Tons
C60 = 60 Tons

DIGIT 8 — VOLTAGE AND START CHARACTERISTICS

E = 200/60/3 XL
D = 415/50/3 XL
F = 230/60/3 XL
4 = 460/60/3 XL
5 = 575/60/3 XL
9 = 380/50/3 XL

DIGIT 9 — SYSTEM CONTROL

B = No System Control
C = Constant Volume Control
E = Supply Air VAV Control
P = EVP Control

DIGIT 10 — DESIGN SEQUENCE

X = Factory Assigned

DIGIT 11 — AMBIENT CONTROL

0 = Standard
1 = 0°F (Low Ambient Dampers)

DIGIT 12 — AGENCY APPROVAL

0 = None
3 = cULus (not available for 50 Hz)

DIGIT 13

A = Non Fused Unit Disconnect Switch

DIGIT 14

B = Hot Gas Bypass Valve

DIGIT 15

D = Suction Service Valves

DIGIT 16

F = Pressure Gauges and Piping

DIGIT 17

G = Return Air Sensor

DIGIT 18

J = Corrosion Protected Condenser Coil

DIGIT 19

C = Remote Chiller Evaporator & Install Kit
T = Flow Switch (EVP Control Only)

DIGIT 20

1 = Spring Isolators
2 = Neoprene Isolators

80 to 120-Ton Units[1]

DIGIT 1 — UNIT TYPE

R = Remote Condensing Unit

DIGIT 2 — CONDENSER

A = Air-Cooled

DIGIT 3 — AIRFLOW

U = Upflow

DIGIT 4 — DEVELOPMENT SEQUENCE

J = Third

DIGITS 5,6,7 — NOMINAL CAPACITY

C80 = 80 Tons
D10 = 100 Tons
D12 = 120 Tons

DIGIT 8 — VOLTAGE AND START CHARACTERISTICS

E = 200/60/3 XL
F = 230/60/3 XL
4 = 460/60/3 XL
5 = 575/60/3 XL
* = 380/50/3 XL[2]
* = 415/50/3 XL[2]

DIGIT 9 — SYSTEM CONTROL

B = No System Control
E = Supply Air VAV Control
P = EVP Control

DIGIT 10 — DESIGN SEQUENCE

X = Factory Assigned

DIGIT 11 — AMBIENT CONTROL

0 = Standard
1 = 0°F (Low Ambient Dampers)

DIGIT 12 — AGENCY APPROVAL

0 = None
3 = cULus (not available for 50 Hz)

DIGIT 13 — NUMBER OF CIRCUITS

2 = Dual (All 80-120 Ton)

DIGIT 14

B = Hot Gas Bypass Valve

DIGIT 15

D = Suction Service Valves

DIGIT 16

F = Pressure Gauges and Piping

DIGIT 17

H = Corrosion Protected Condenser Coil

DIGIT 18

1 = Spring Isolators

DIGIT 19

C = Remote Chiller Evap & Install Kit
3 = Flow Switch (EVP Control only)

[1] The service digit for each model number contains 21 digits; all 21 digits must be referenced.
[2] Contact the local Trane Sales Office for ordering information regarding 80-120 50Hz models.

General Information

Unit Inspection

As soon as the unit arrives at the job site

- Verify that the nameplate data matches the data on the sales order and bill of lading (including electrical data).
- Verify that the power supply complies with the unit nameplate specifications.
- Visually inspect the exterior of the unit, including the roof, for signs of shipping damage.
- Check for material shortages. Refer to the Component Layout and Ship with Location illustration.

Important: *If the job site inspection of the unit reveals damage or material shortages,* ***file a claim with the carrier immediately. Specify the type and extent of the damage on the 'bill of lading" before signing.***

- Visually inspect the internal components for shipping damage as soon as possible after delivery and before it is stored. Do not walk on the sheet metal base pans.

⚠WARNING

No Step Surface!

Do not walk on the sheet metal drain pan. Walking on the drain pan could cause the supporting metal to collapse, resulting in the operator/technician to fall. Failure to follow this recommendation could result in death or serious injury.

Bridging between the unit's main supports may consist of multiple 2 by 12 boards or sheet metal grating.

- If concealed damage is discovered, notify the carrier's terminal of damage immediately by phone and by mail. Concealed damage must be reported within 15 days.
- Request an immediate joint inspection of the damage by the carrier and the consignee. Do not remove damaged material from the receiving location. Take photos of the damage, if possible. The owner must provide reasonable evidence that the damage did not occur after delivery.
- Notify the appropriate Trane office before installing or repairing a damaged unit.

Unit Nameplate

One Mylar unit nameplate is located on the outside upper right corner of the control panel door. It includes the unit model number, serial number, electrical characteristics, weight, refrigerant charge, as well as other pertinent unit data. A small metal nameplate with the Model Number, Serial Number, and Unit Weight is located just above the Mylar nameplate, and a third nameplate is located on the inside of the control panel door.

When ordering replacement parts or requesting service, be sure to refer to the specific model number, serial number, and DL number (if applicable) stamped on the unit nameplate.

Compressor Nameplate

The nameplate for the "Scroll" compressors is located on the compressor lower housing.

EVP Chiller - Applications Only

If ordered with remote EVP chiller kit, piping components ship in condenser section. The heat exchanger ships separately. The 20-30 chiller nameplate is located on same side as water connections near center left. The 40-120 Ton chiller nameplate is located on same side as water connections near bottom. To view, raise insulation flap over nameplate. Replace and retape insulation flap after viewing.

Phase Monitor (1U3)

The unit is equipped with a phase monitor in the control box. The phase monitor will protect against phase loss, imbalance and reversal of the line voltage. If a fault occurs, the red LED will energize. While the fault condition is present the phase monitor interrupts the 115V control circuit. If no faults are observed, a green LED will be energized.

Manual Motor Protectors (380V through 575V Only): Manual motor protectors will be used as branch circuit protection for compressors. These devices are capable of providing both overload and short-circuit protection.

Before operating, the manual motor protector must be switched with the rotary on/off switch to the "ON" position and the overload setpoint dial must be set to the appropriate rating of the motor.

Important: *In order to avoid nuisance trips, the overload setpoint dial must be adjusted to the following calculated value:*

- Overload Setting = (Compressor RLA) x 1.12

Figure 1. Compressor protection module

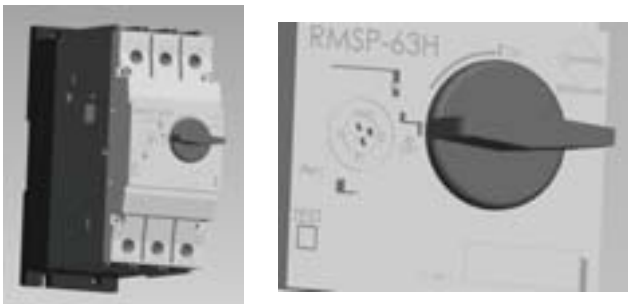

On 80-120 Ton units, the CSHN*** compressors come equipped with a compressor protection device capable of detecting phase reversal, phase loss, and phase unbalance. The compressor protection device uses a Green and Red LED to indicate the compressor status. A solid Green LED denotes a fault free condition; a blinking Red LED indicates an identifiable fault condition. Once a problem has been detected, the power will have to be cycled to clear the reset circuit.

Note: *If the compressor has tripped, the resistance will be 4500 ohms or greater; when reset, they will be less than 2750 ohms.*

Blink Code: The blink code consists of different on / off time of the Red LED which is repeated continuously until either the fault is cleared or until power is cycled.

Table 1. Blink codes

Fault	LED on	LED off	LED on	LED off
PTC[a] overheat or PTC reset delay active	short	long	short	long
Phase loss	long	long	long	long
Incorrect phase sequence	short	short	short	long

(a) PTC = Positive Temperature Coefficient

Discharge Line Thermostat

The first compressor on each circuit is equipped with a Discharge Line Thermostat. If the temperature of the line exceeds 230F the thermostat interrupts the 115V control circuit for the compressors and all the compressors on the circuit will de-energize. Once the temperature drops below 180F the thermostat will close and allow the compressor to be energized.

Unit Description

All air cooled condensing units are designed for outdoor installations with vertical air discharge. These units may be installed on a flat roof or placed on a concrete slab at ground level.

Before shipment, each unit is leak-tested, evacuated, a nitrogen holding charge is added, and the controls are tested for proper operation.

The condenser coils an all Aluminum Microchannel design. Corrosion protected condenser coils are a standard option. Louvered condenser grilles for coil protection are standard. Direct-drive, vertical discharge condenser fans are provided with built-in current and overload protection.

For “Ship with” items, see Figure 2, p. 9 and Figure 3, p. 9.

If low ambient operation is required, low ambient dampers are available as a field or factory installed option.

Units may be ordered with one of the following options:

- No System Controls (Field provided controls required)
- Constant Volume Controls
- Supply Air Temperature Control (VAV applications)
- EVP Chiller Controls

Basic unit components include:

- Manifolded Scroll Compressors
- Condenser coils
- Condenser fans (number based on unit size)
- Discharge service valve (one per circuit)
- Liquid line service valve (one per circuit)

Table 2. General data - 20 - 120 Ton remote chillers

Model Number	RAUJ-C20	RAUJ-C25	RAUJ-C30	RAUJ-C40	RAUJ-C50	RAUJ-C60	RAUJ-C80	RAUJ-D10	RAUJ-D12
Shipping weight, lbs	44	84	113	90	135	157	208	292	320
Operating weight, lbs	56	104	142	131	206	244	330	473	520
No. of refrigerant circuits	1	1	1	2	2	2	2	2	2
Water volume, Gal	1.4	2.2	3.3	4.6	7.9	9.7	13.6	20.1	22.2
Chiller refrig charge @ AHRI condition, lbs	0.9	1.5	2.2	3.1	5.3	6.4	9.0	13.3	14.7
Minimum water flow rate, GPM	24	30	36	48	60	72	96	120	144
Maximum water flow rate, GPM	69	89	100	136	176	201	275	346	407
Chiller Water Supply/Return Pipe Size, in	2.0	2.0	2.0	3.0	3.0	3.0	4.0	4.0	4.0

Notes:
1. All heat exchangers are brazed plate.
2. All heat exchangers are single circuit on the water side.
3. Shipping and operating weights are approximate.
4. Refrigerant charge is approximate and for chiller only.
5. Applications with leaving water temperature below 42°F require freeze protection down to 15°F.
6. Maximum chiller operating ambient is 115°F.

Figure 2. Component layout and 'ship-with' locations 20 - 60T units[a]

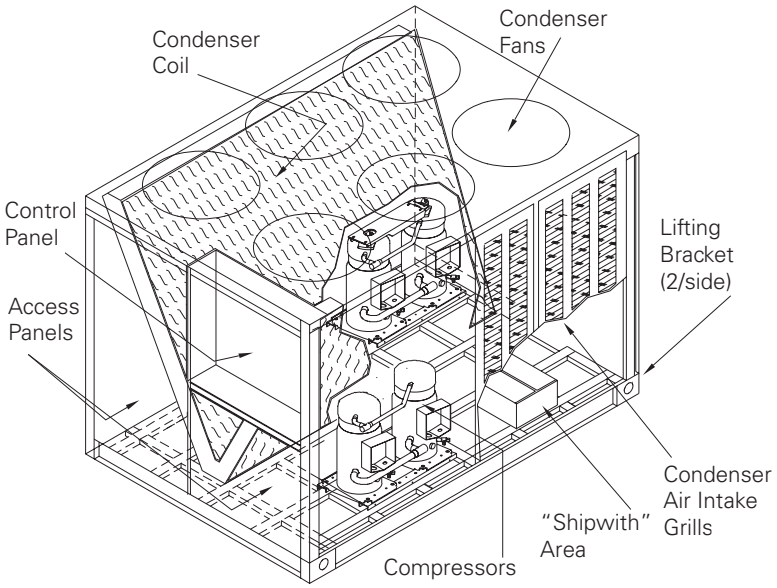

(a) 60T unit shown

Figure 3. Component layout and 'ship-with' locations 80 - 120T units[a]

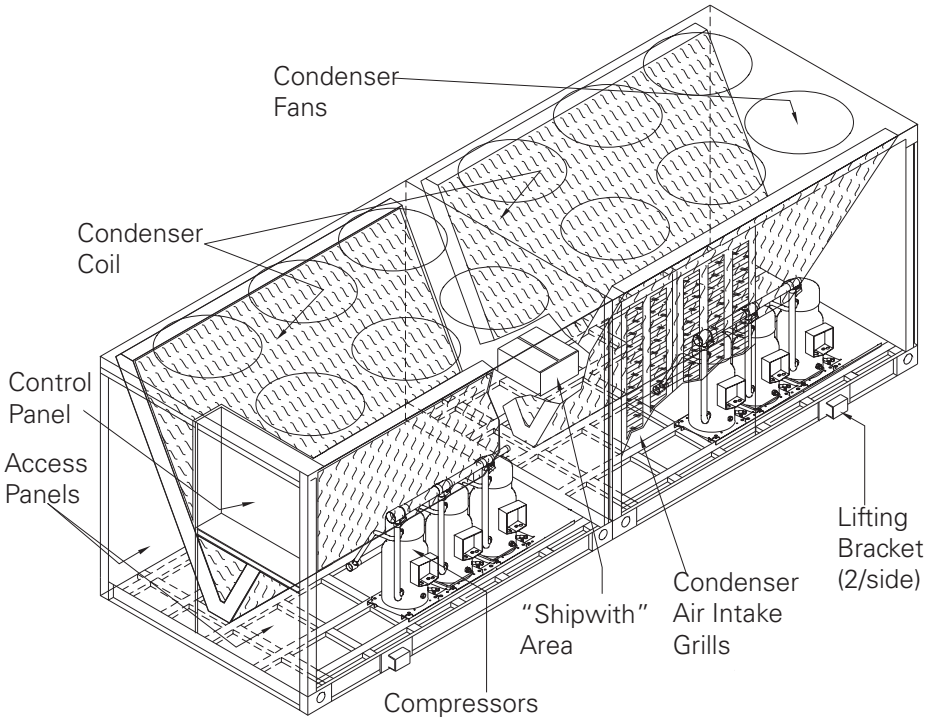

(a) 120T unit shown

Unit Dimensions & Weights

Unit Clearances

Figure 4, p. 10 illustrates the minimum operating and service clearances for either a single, multiple, or pit application. These clearances are the minimum distances necessary to assure adequate serviceability, cataloged unit capacity, and peak operating efficiency.

NOTICE:

Equipment Damage!

Providing less than the recommended clearances could result in condenser coil starvation or recirculation of hot condenser air.

Locate the unit as close to the applicable system support equipment as possible to minimize refrigerant piping lengths.

Allow adequate clearance for water and refrigerant piping connections, space to perform service procedures, i.e. read gauges, thermometers, and operate water system valves.

EVP Chiller Considerations

Allow adequate clearance for water and refrigerant piping connections, space to perform service procedures, (i.e. read gauges, thermometers, and operate water system valves.

Note: *The braze plate chiller is intended for indoor application. If a sub-freezing location is required, contact Trane for installation precautions required to prevent damage.*

Figure 4. Typical installation clearances for single, multiple or pit applications (20-60 Ton units only)

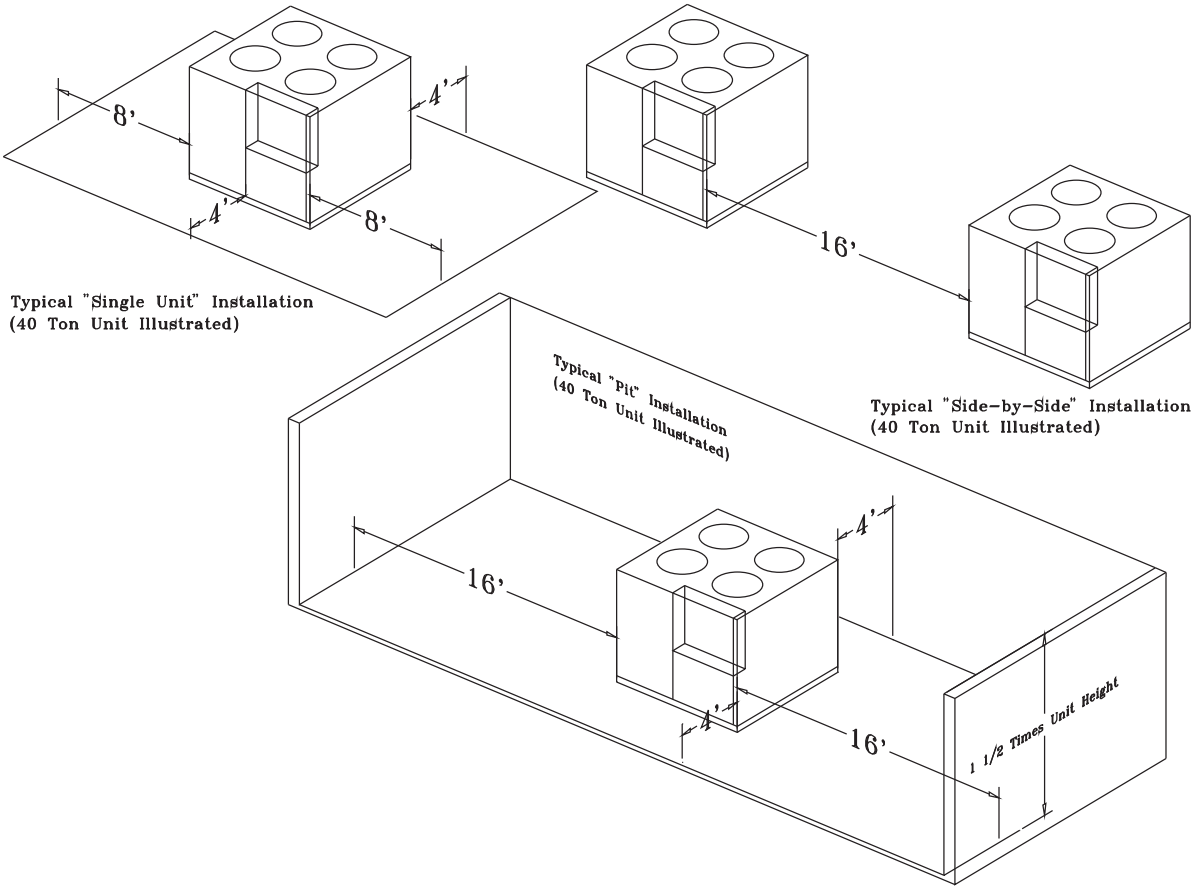

Dimensions

Figure 5. 20-Ton air-cooled condensing unit

NOTES:

1. SEE CONNECTION DRAWING FOR CONNECTION LOCATION AND SIZES.
2. LOW AMBIENT DAMPER ONLY COMES WITH SELECTED UNIT .
3. FRONT OF UNIT CLEARANCE 72" . BACK OF UNIT CLEARANCE 72" . LEFT AND RIGHT SIDE OF UNIT CLEARANCE 42".

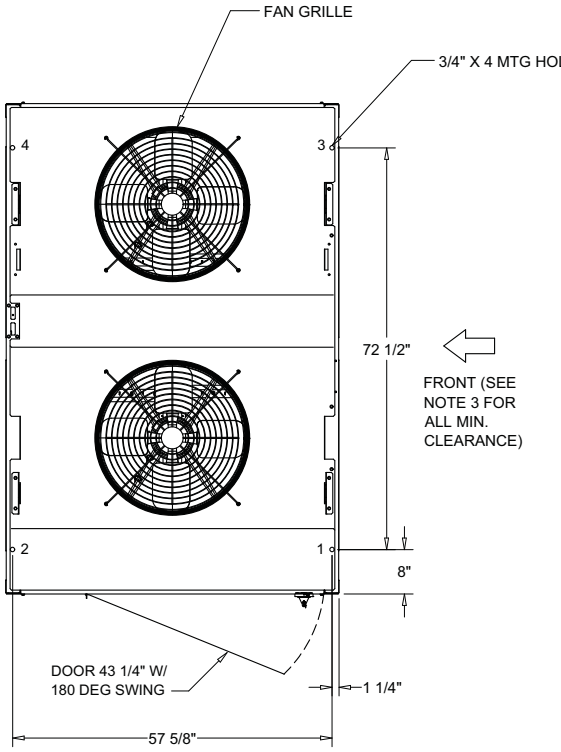

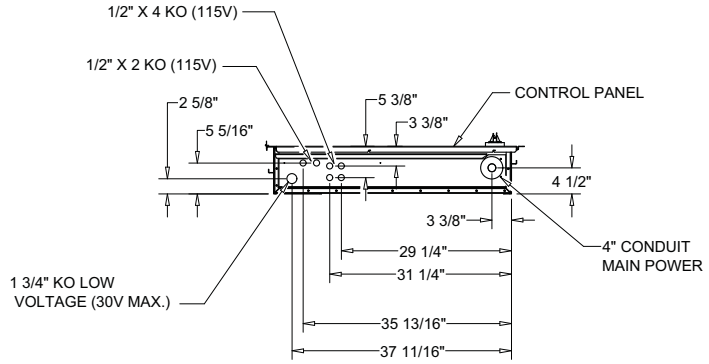

DETAIL A

CONTROL BOX BOTTOM

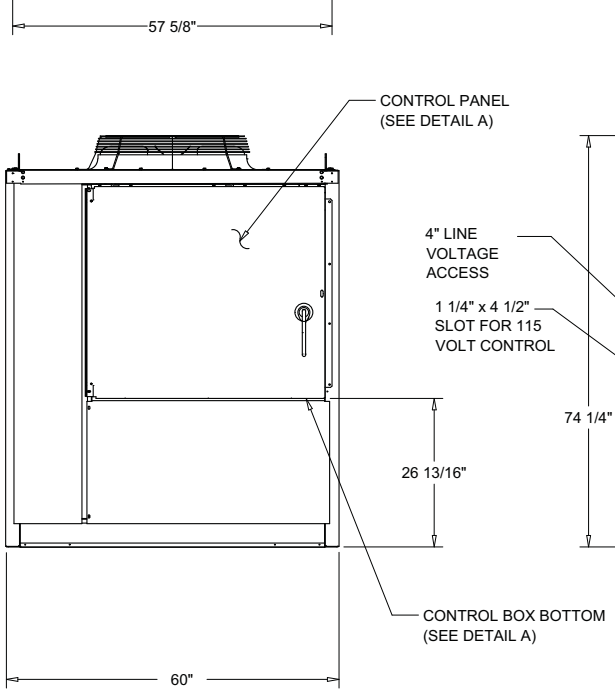

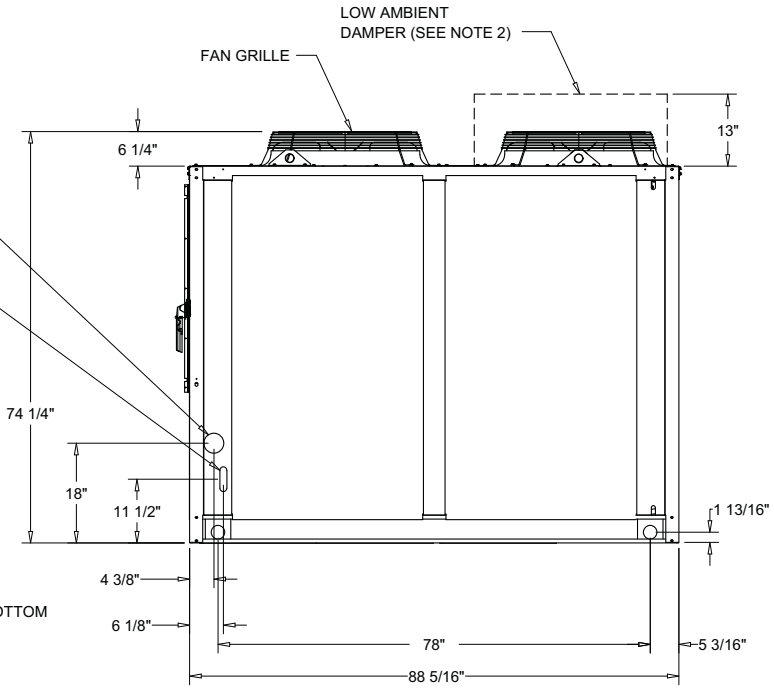

Figure 6. 20-Ton air-cooled condensing unit (connections)

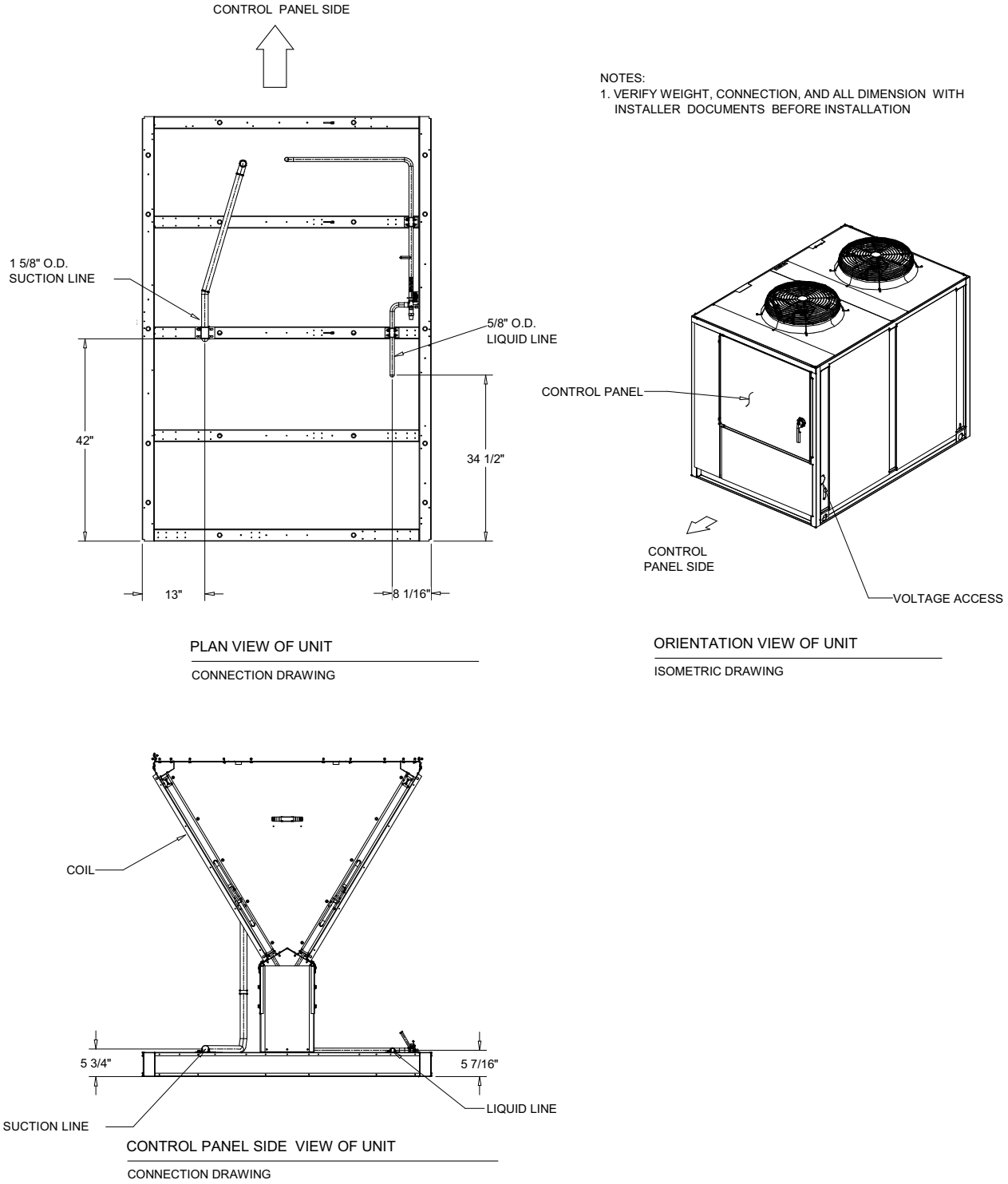

Figure 7. 25- and 30-Ton air-cooled condensing unit

NOTES:

1. SEE CONNECTION DRAWING FOR CONNECTION LOCATION AND SIZES.
2. LOW AMBIENT DAMPER ONLY COMES WITH SELECTED UNIT .
3. FRONT OF 20 AND 30 UNIT CLEARANCE 72" . BACK OF UNIT CLEARANCE 72". LEFT AND RIGHT SIDE OF 20 AND 30 UNIT CLEARANCE 42".

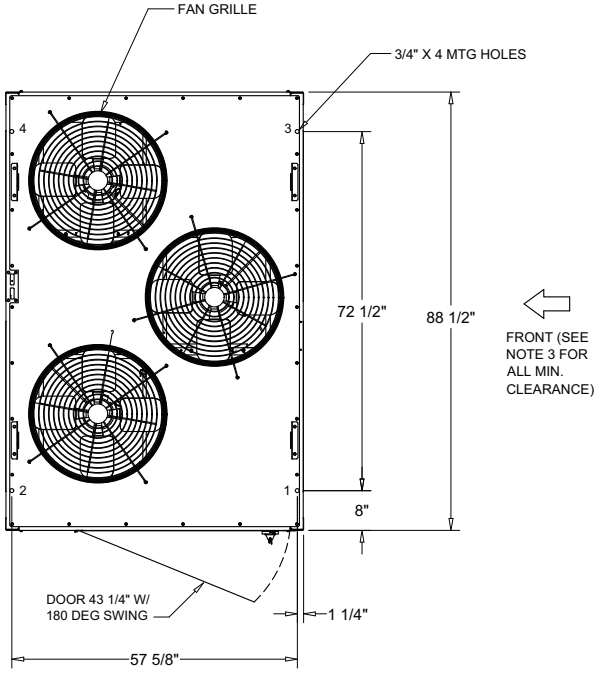

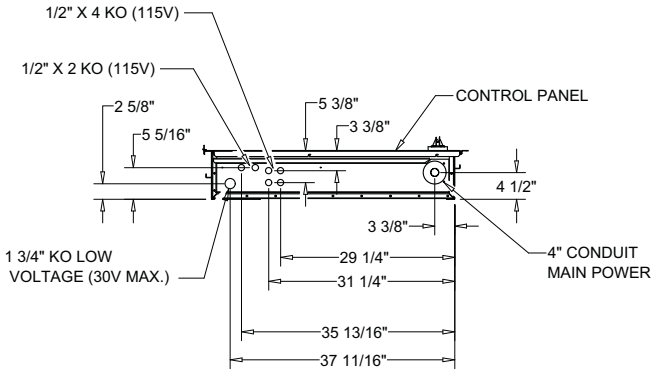

DETAIL A

CONTROL BOX BOTTOM

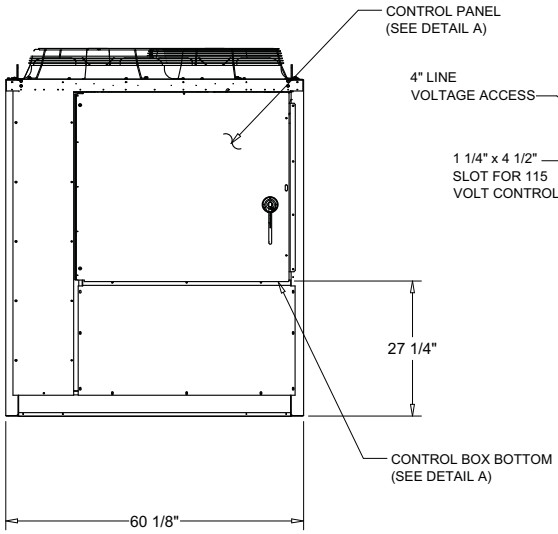

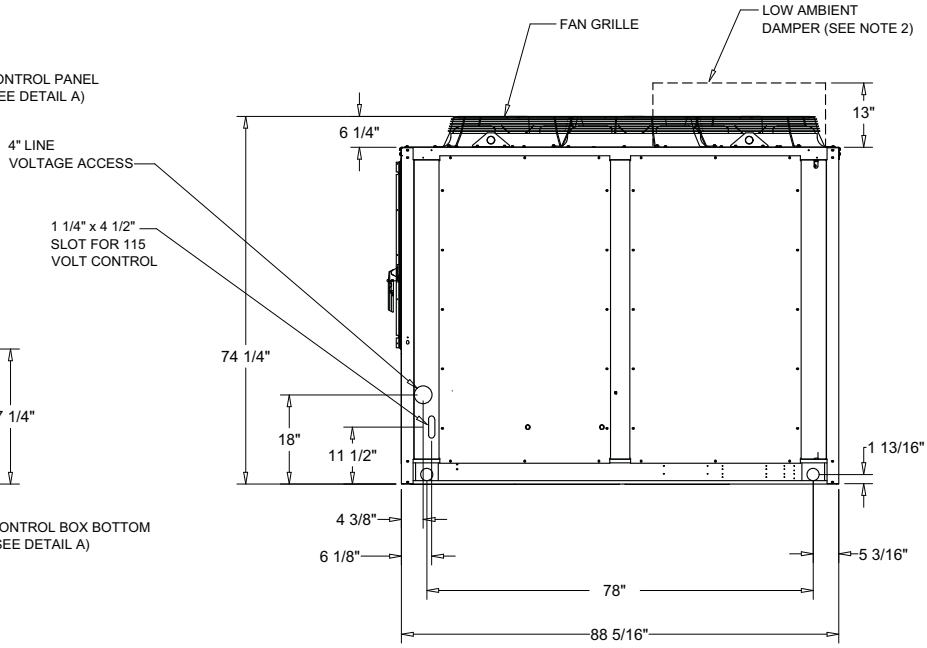

Figure 8. 25- and 30-Ton air-cooled condensing unit (connections)

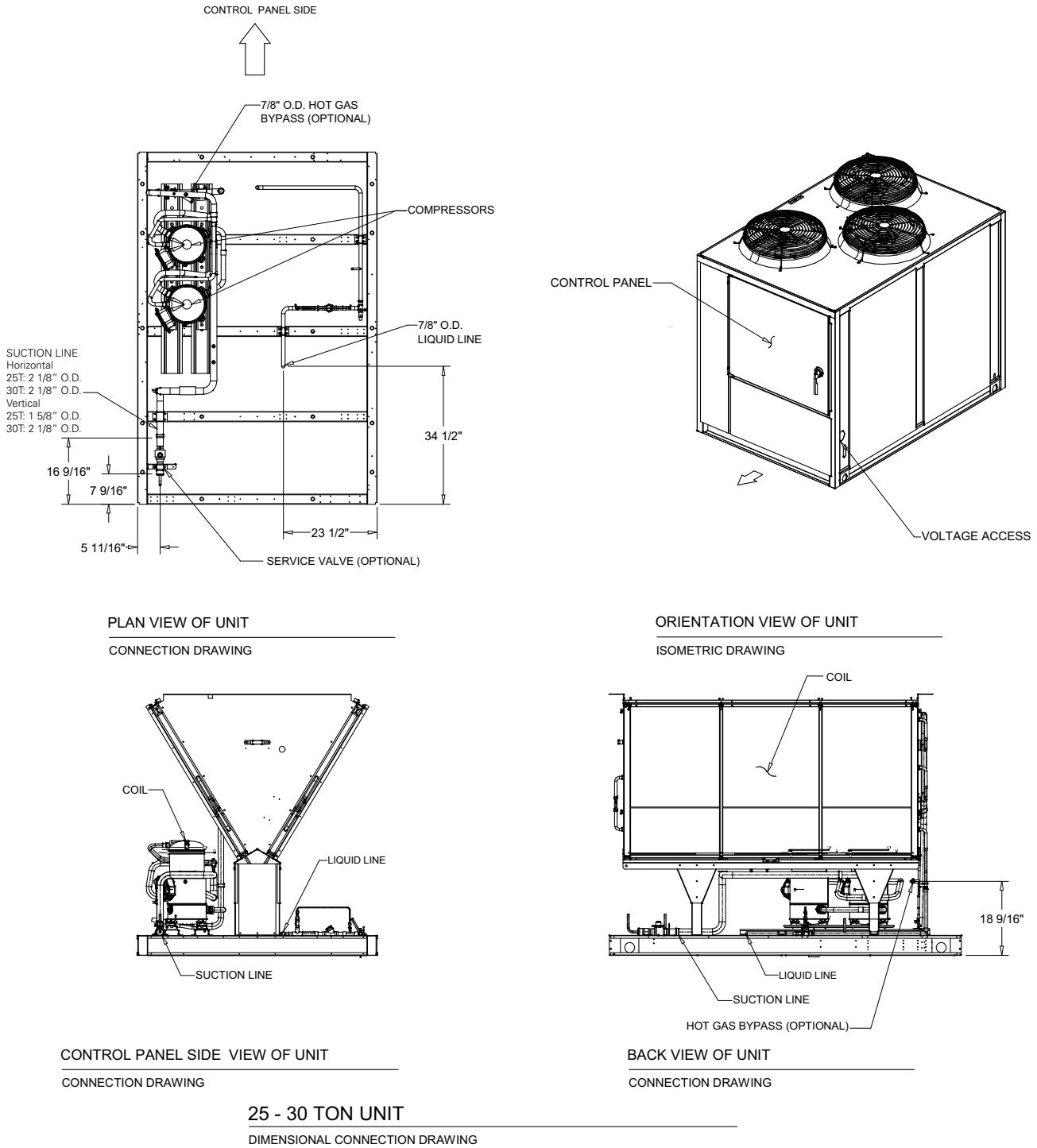

Figure 9. 40-Ton air-cooled condensing unit

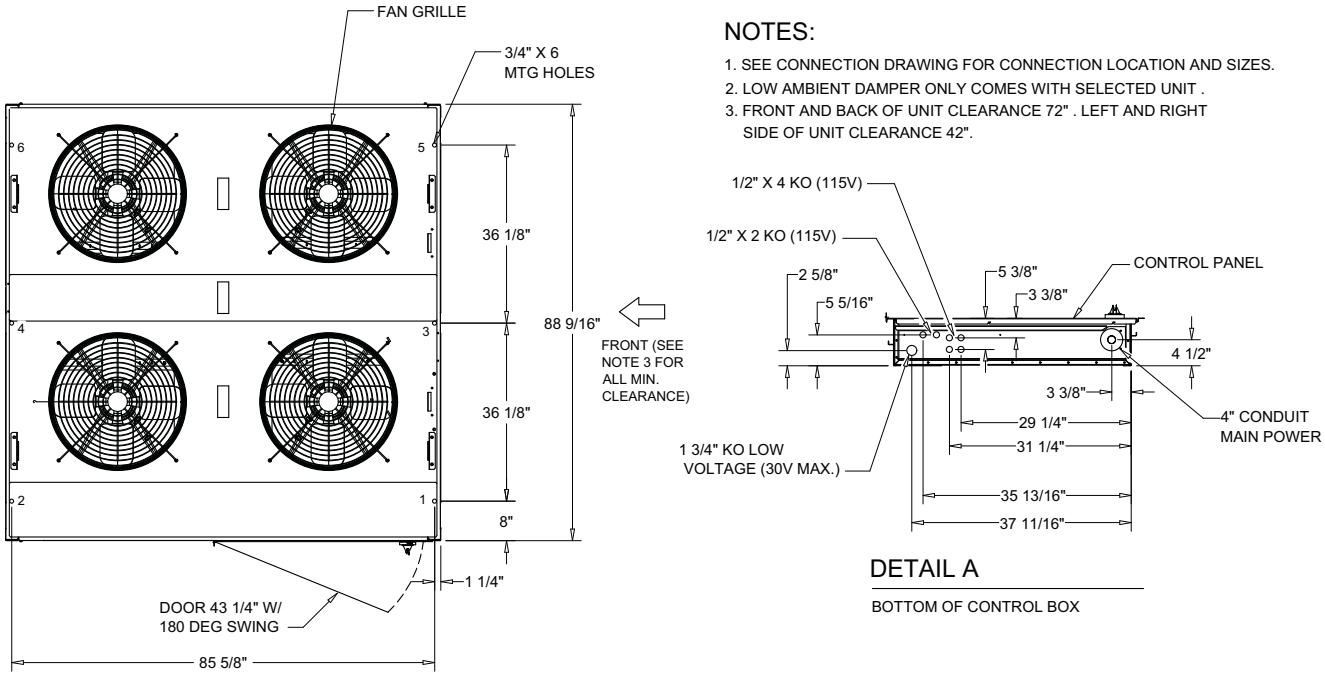

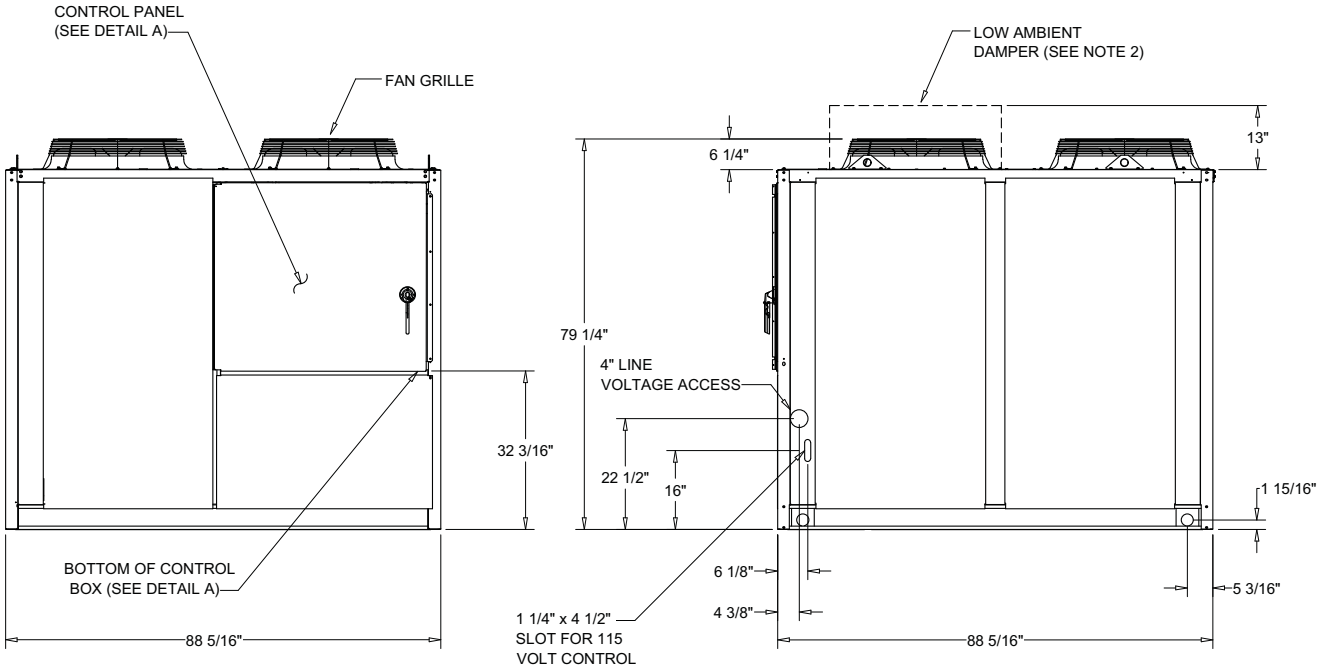

Figure 10. 40-Ton air-cooled condensing unit (connections)

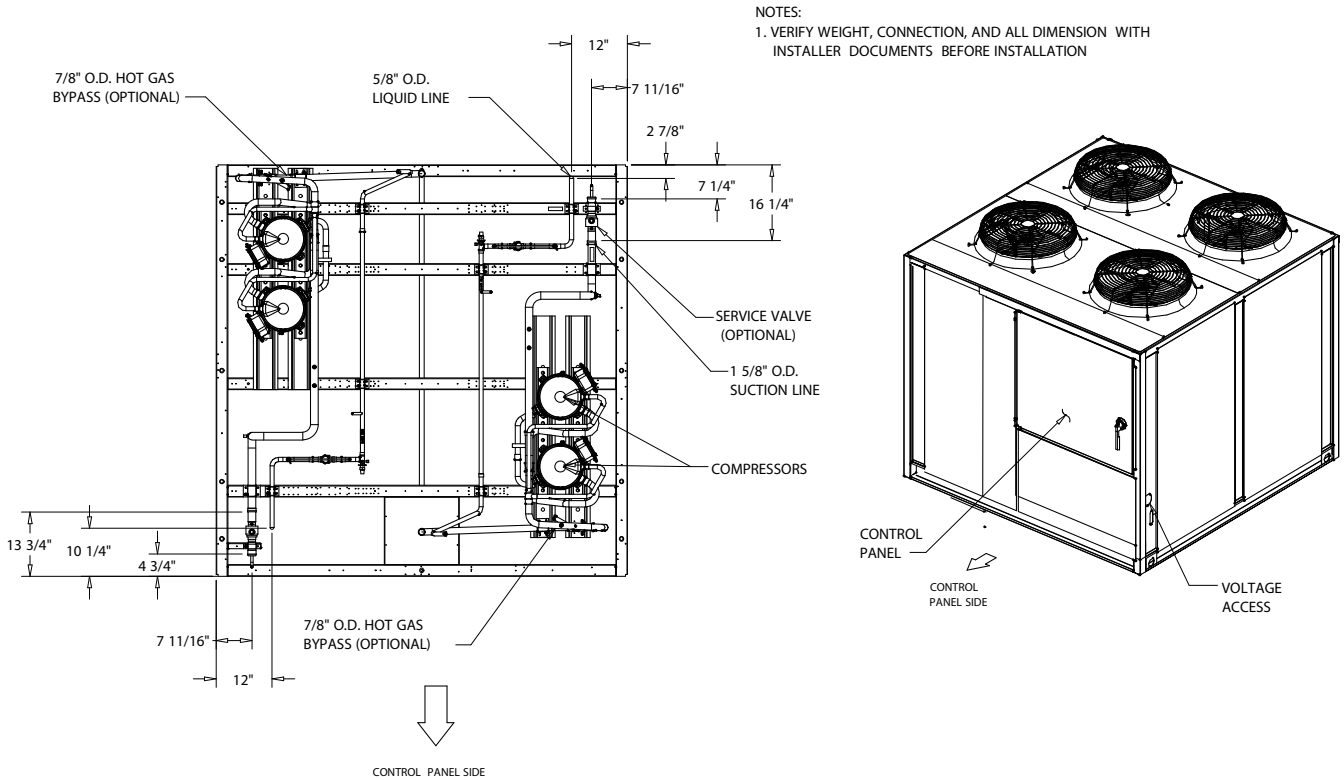

PLAN VIEW OF UNIT

CONNECTION DRAWING

ORIENTATION VIEW OF UNIT

ISOMETRIC DRAWING

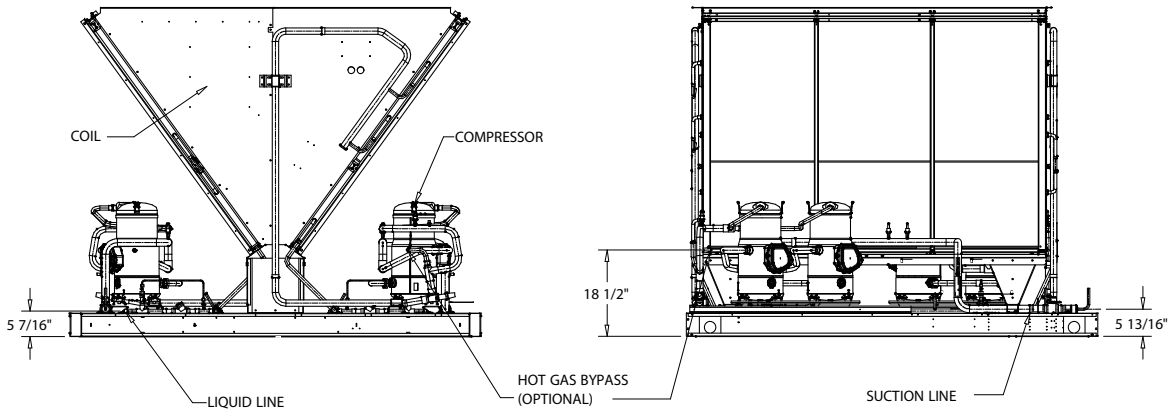

CONTROL PANEL SIDE VIEW OF UNIT

CONNECTION DRAWING

BACK VIEW OF UNIT

CONNECTION DRAWING

40 TON UNIT

DIMENSIONAL CONNECTION DRAWING

Figure 11. 50-Ton air-cooled condensing unit

NOTES:

1. SEE CONNECTION DRAWING FOR CONNECTION LOCATION AND SIZES.
2. LOW AMBIENT DAMPER ONLY COMES WITH SELECTED UNIT .
3. FRONT AND BACK OF UNIT CLEARANCE 72" . LEFT AND RIGHT SIDE OF UNIT CLEARANCE 42".

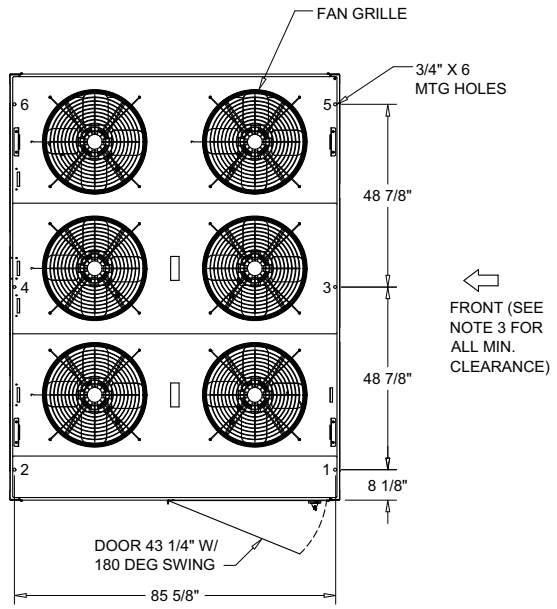

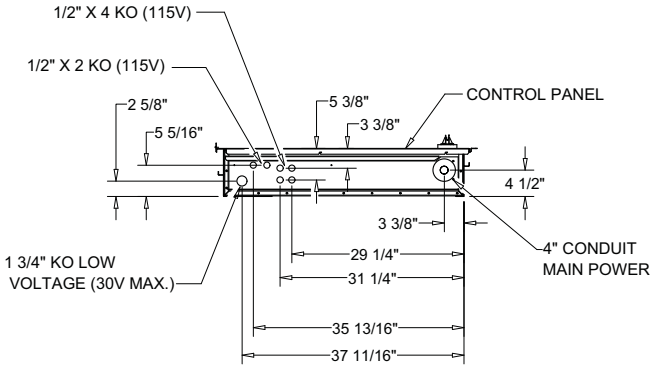

DETAIL A

BOTTOM OF CONTROL BOX

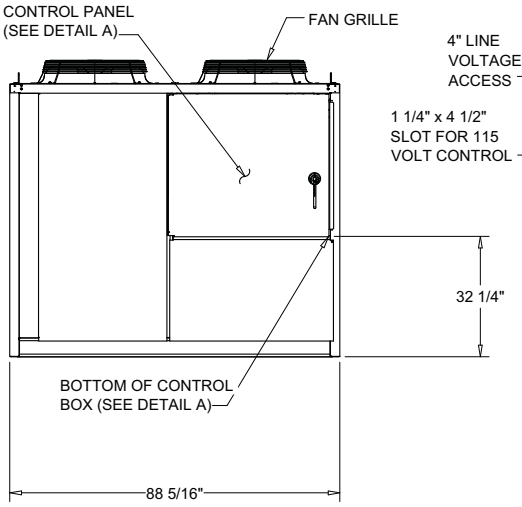

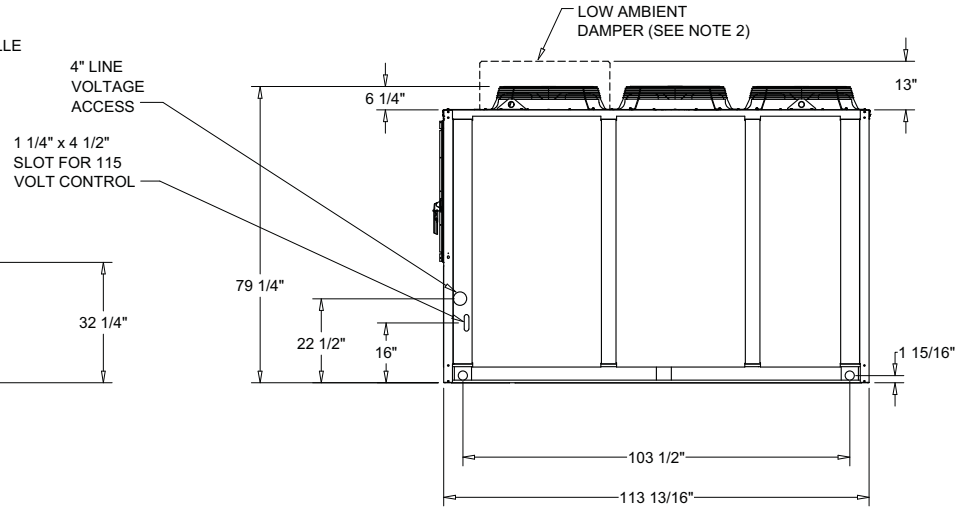

Figure 12. 50-Ton air-cooled condensing unit (connections)

NOTES:
1. VERIFY WEIGHT, CONNECTION, AND ALL DIMENSION WITH INSTALLER DOCUMENTS BEFORE INSTALLATION

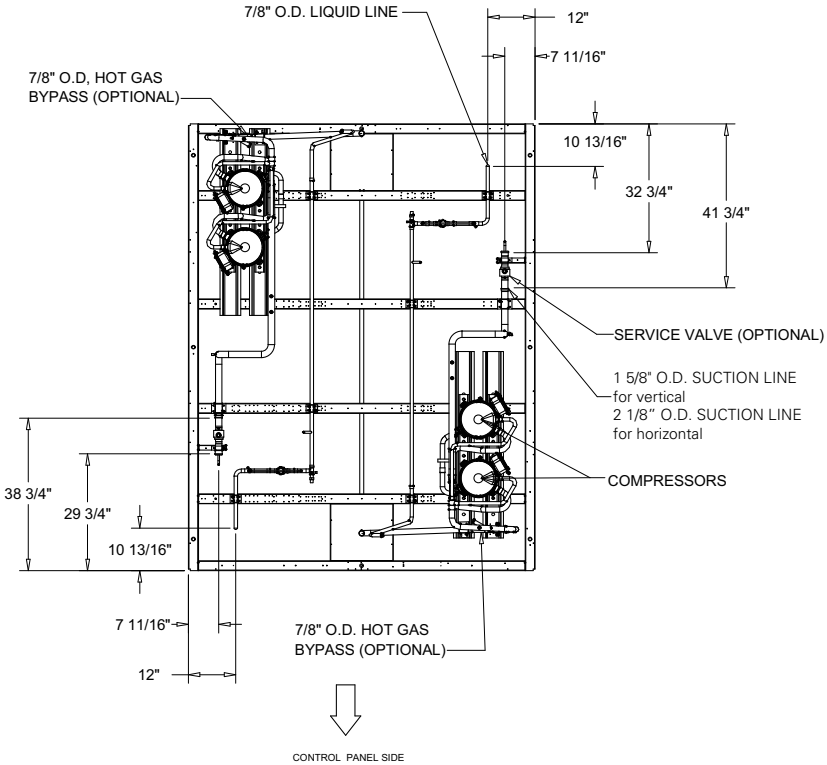

PLAN VIEW OF UNIT

CONNECTION DRAWING

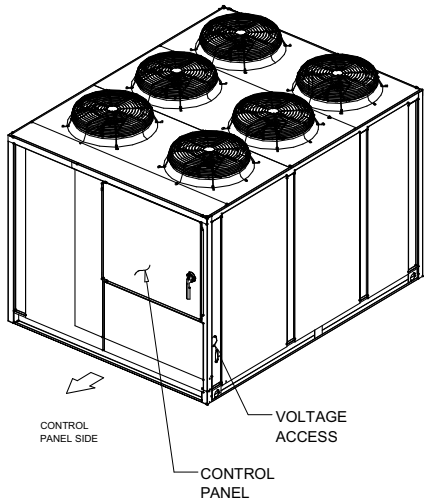

ORIENTATION VIEW OF UNIT

ISOMETRIC DRAWING

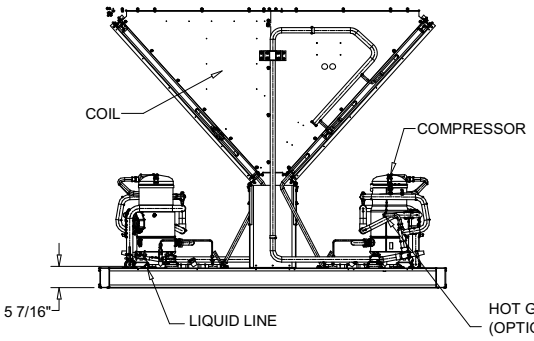

CONTROL PANEL SIDE VIEW OF UNIT

CONNECTION DRAWING

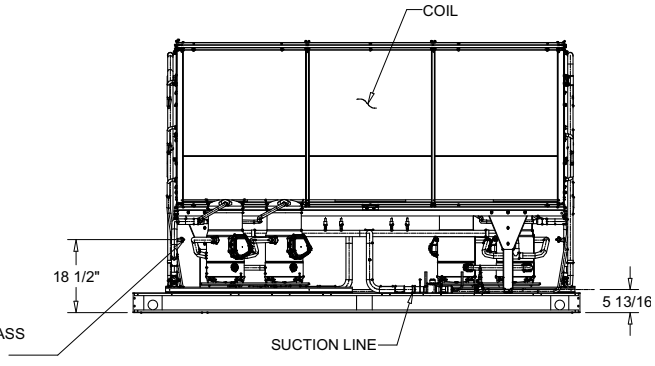

BACK VIEW OF UNIT

CONNECTION DRAWING

50 TON UNIT

DIMENSIONAL CONNECTION DRAWING

Figure 13. 60-Ton air-cooled condensing unit

NOTES:

1. SEE CONNECTION DRAWING FOR CONNECTION LOCATION AND SIZES.
2. LOW AMBIENT DAMPER ONLY COMES WITH SELECTED UNIT .
3. FRONT AND BACK OF UNIT CLEARANCE 72" . LEFT AND RIGHT SIDE OF UNIT CLEARANCE 42".

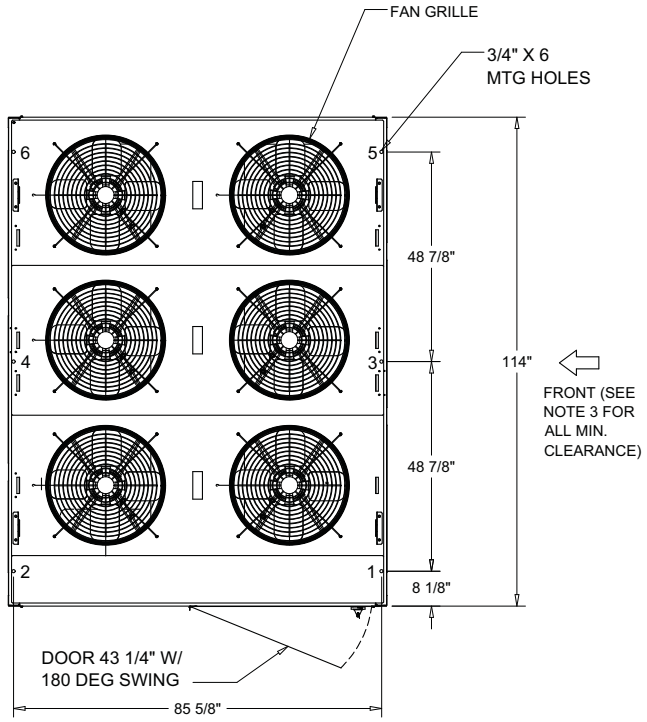

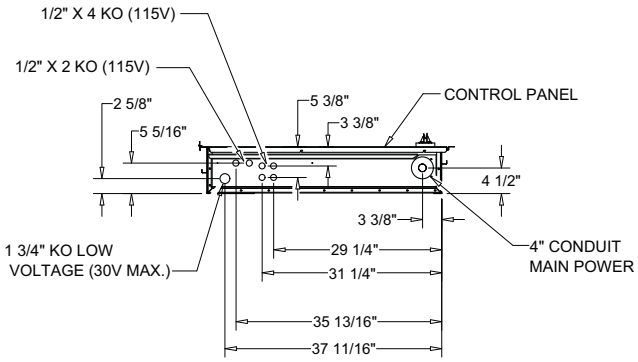

DETAIL A

BOTTOM OF CONTROL BOX

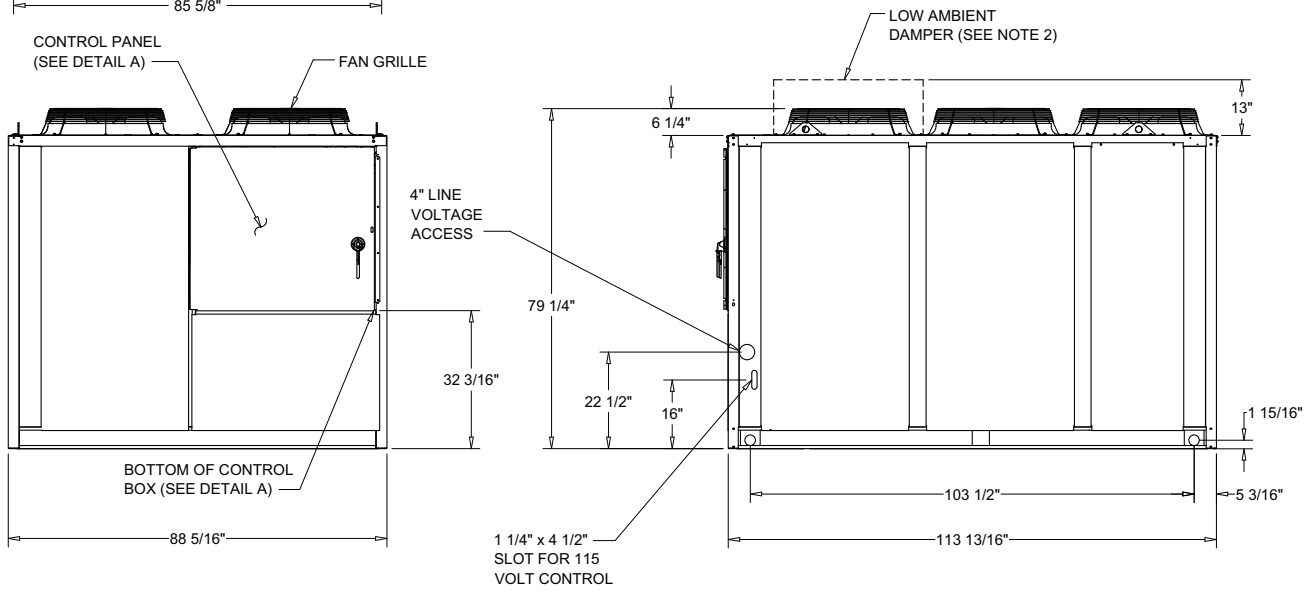

Figure 14. 60-Ton air-cooled condensing unit (connections)

NOTES:
1. VERIFY WEIGHT, CONNECTION, AND ALL DIMENSION WITH INSTALLER DOCUMENTS BEFORE INSTALLATION

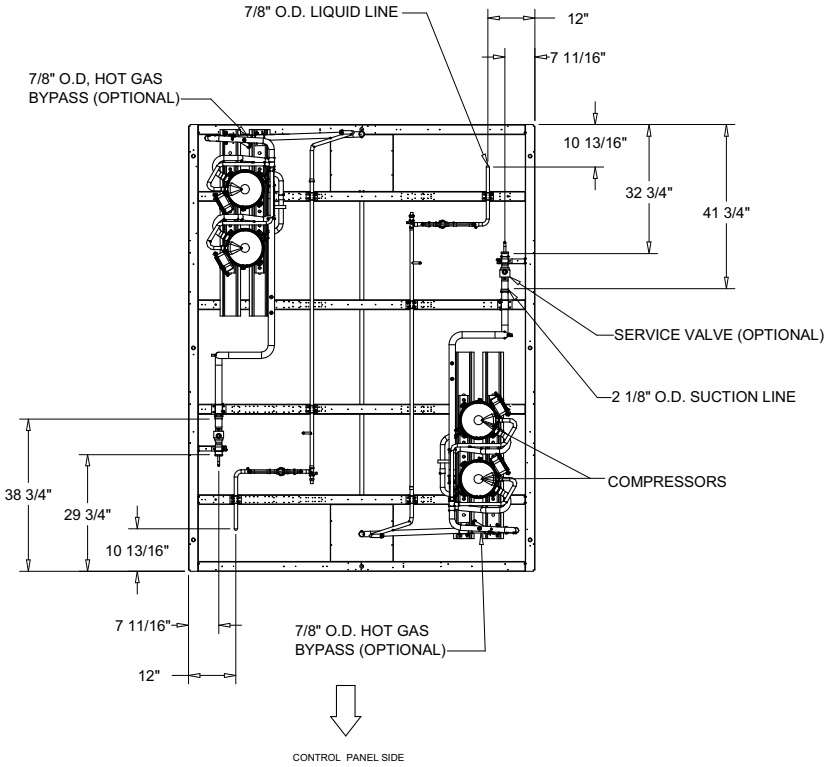

PLAN VIEW OF UNIT

CONNECTION DRAWING

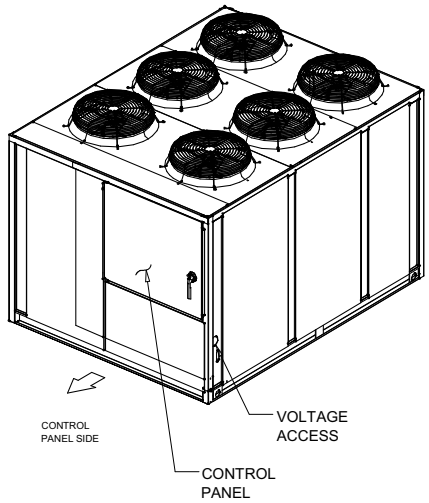

ORIENTATION VIEW OF UNIT

ISOMETRIC DRAWING

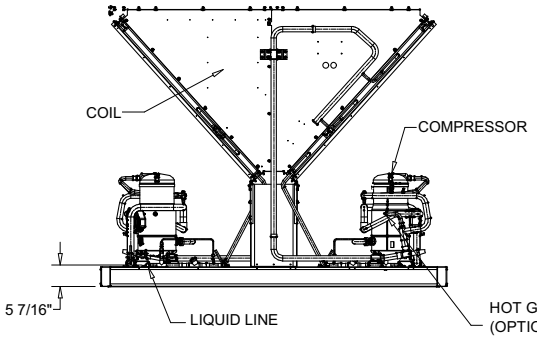

CONTROL PANEL SIDE VIEW OF UNIT

CONNECTION DRAWING

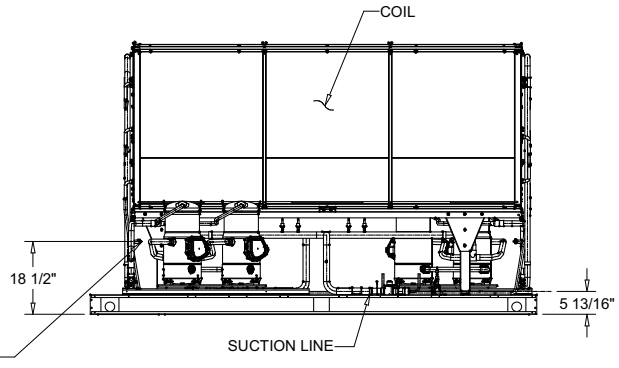

BACK VIEW OF UNIT

CONNECTION DRAWING

60 TON UNIT

DIMENSIONAL CONNECTION DRAWING

Figure 15. 80-Ton air-cooled condensing unit

NOTES:

1. SEE CONNECTION DRAWING FOR CONNECTION LOCATION AND SIZES.
2. LOW AMBIENT DAMPER ONLY COMES WITH SELECTED UNIT .
3. FRONT AND BACK OF UNIT CLEARANCE 96" . LEFT AND RIGHT SIDE OF UNIT CLEARANCE 48".

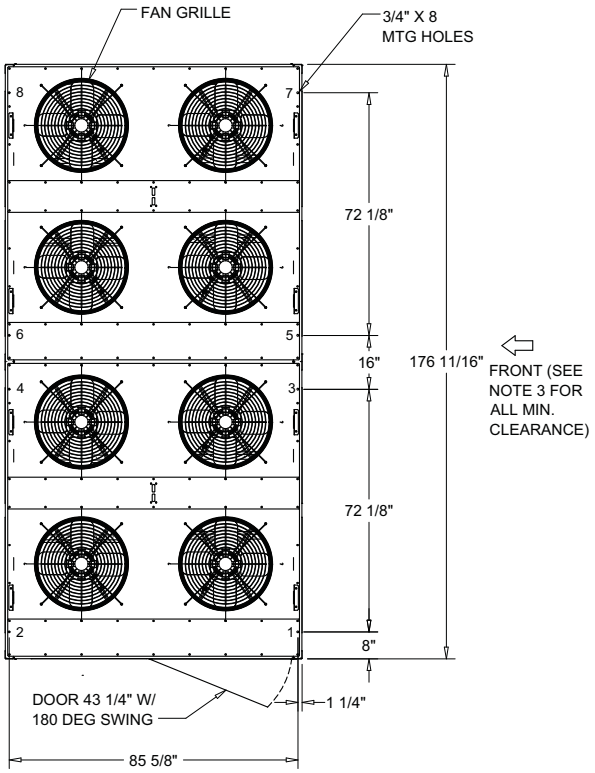

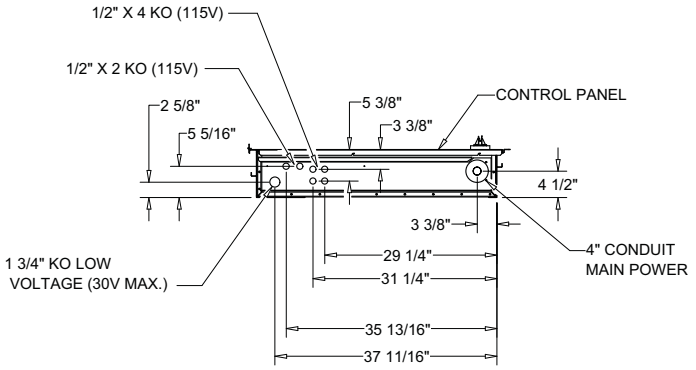

DETAIL A

DIMENSIONAL DETAIL

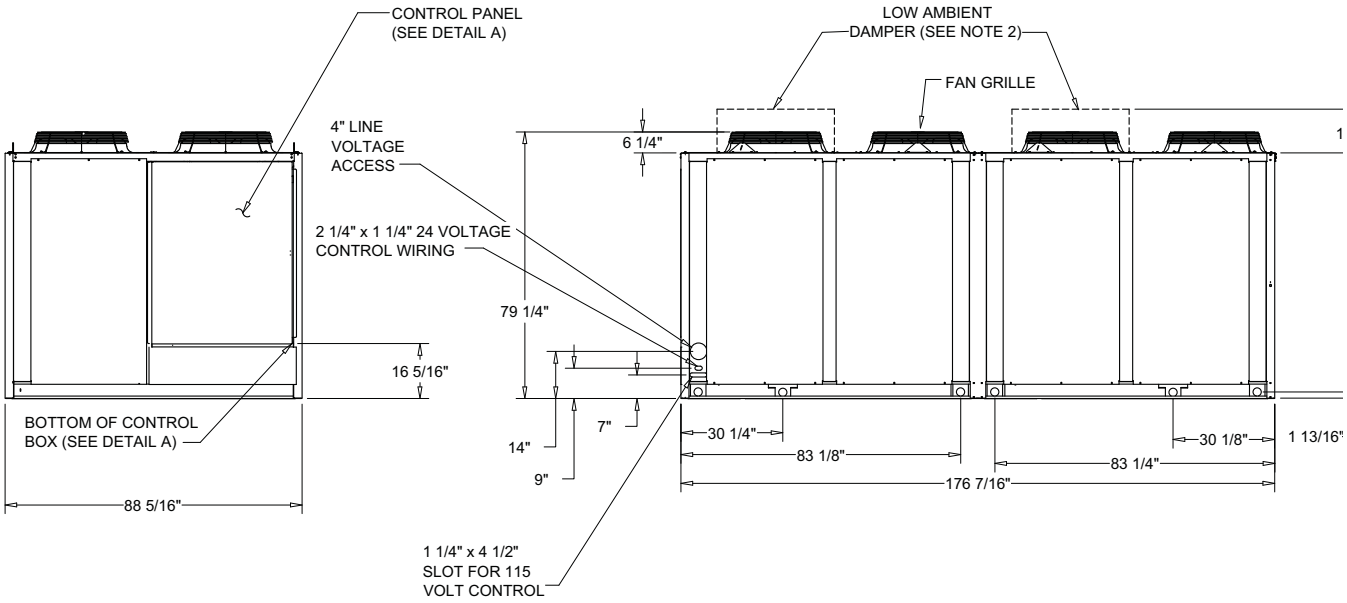

Figure 16. 80-Ton air-cooled condensing unit (connections)

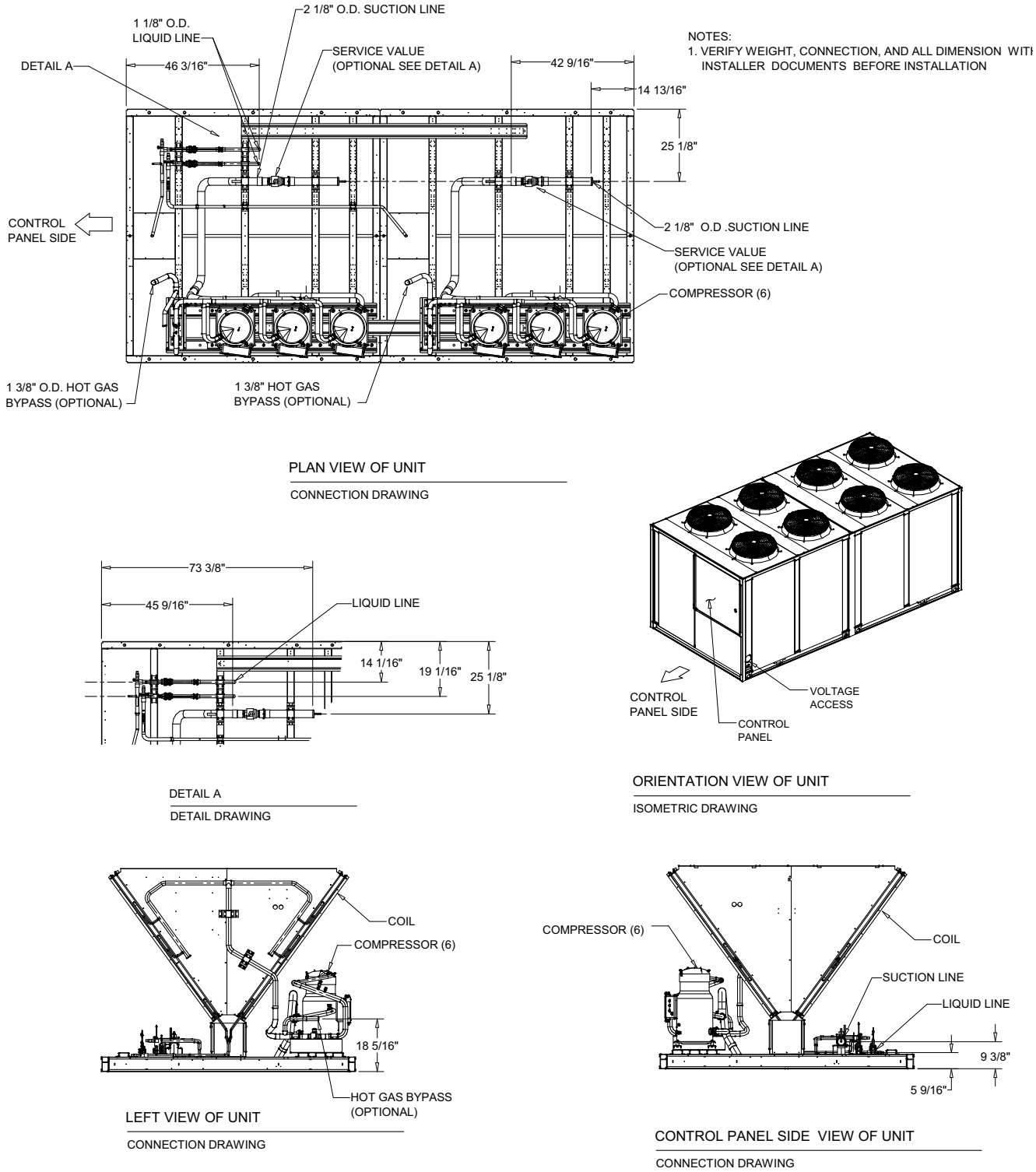

Figure 17. 100- and 120-Ton air-cooled condensing unit

NOTES:

1. SEE CONNECTION DRAWING FOR CONNECTION LOCATION AND SIZES.
2. LOW AMBIENT DAMPER ONLY COMES WITH SELECTED UNIT .
3. FRONT AND BACK OF UNIT CLEARANCE 96" . LEFT AND RIGHT SIDE OF UNIT CLEARANCE 48".

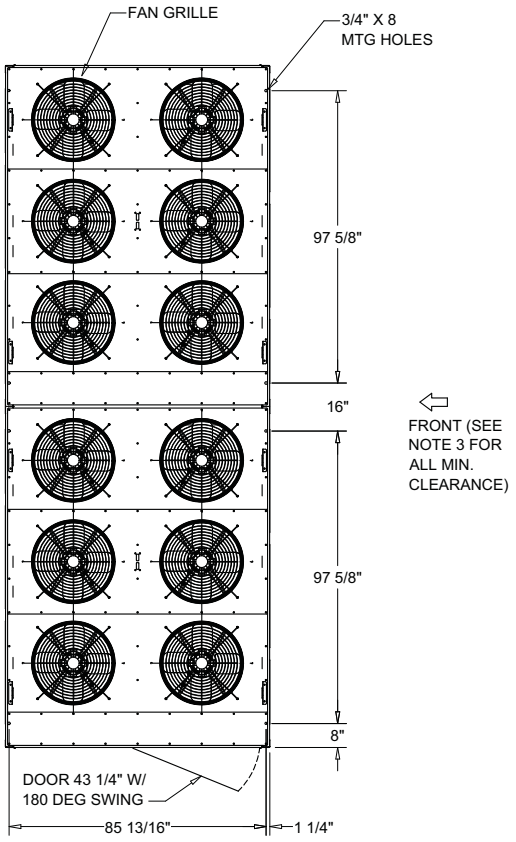

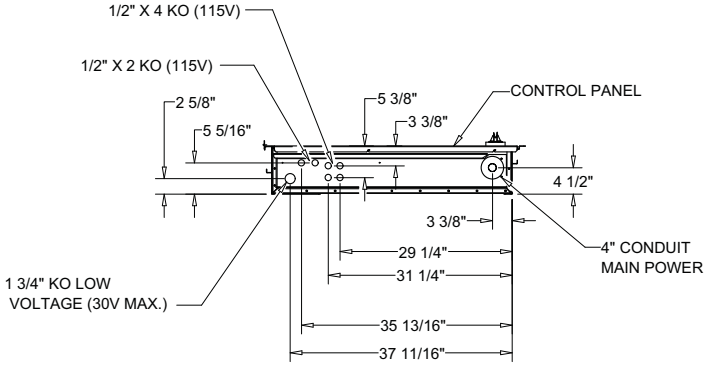

DETAIL A

DIMENSIONAL DETAIL

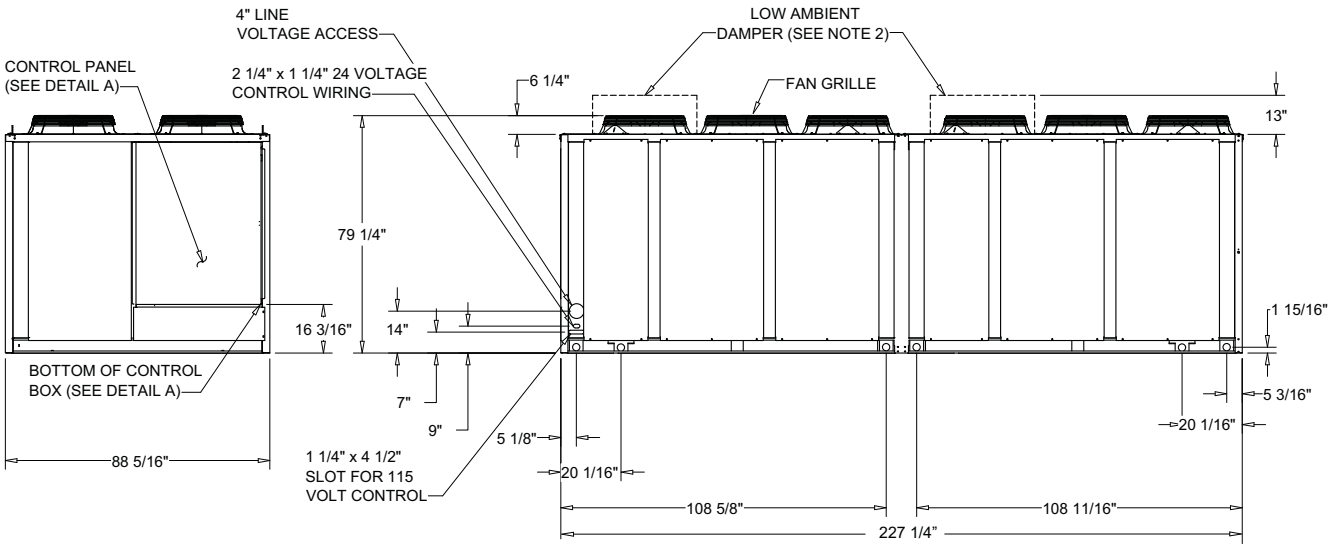

Figure 18. 100- and 120-Ton air-cooled condensing unit (connections)

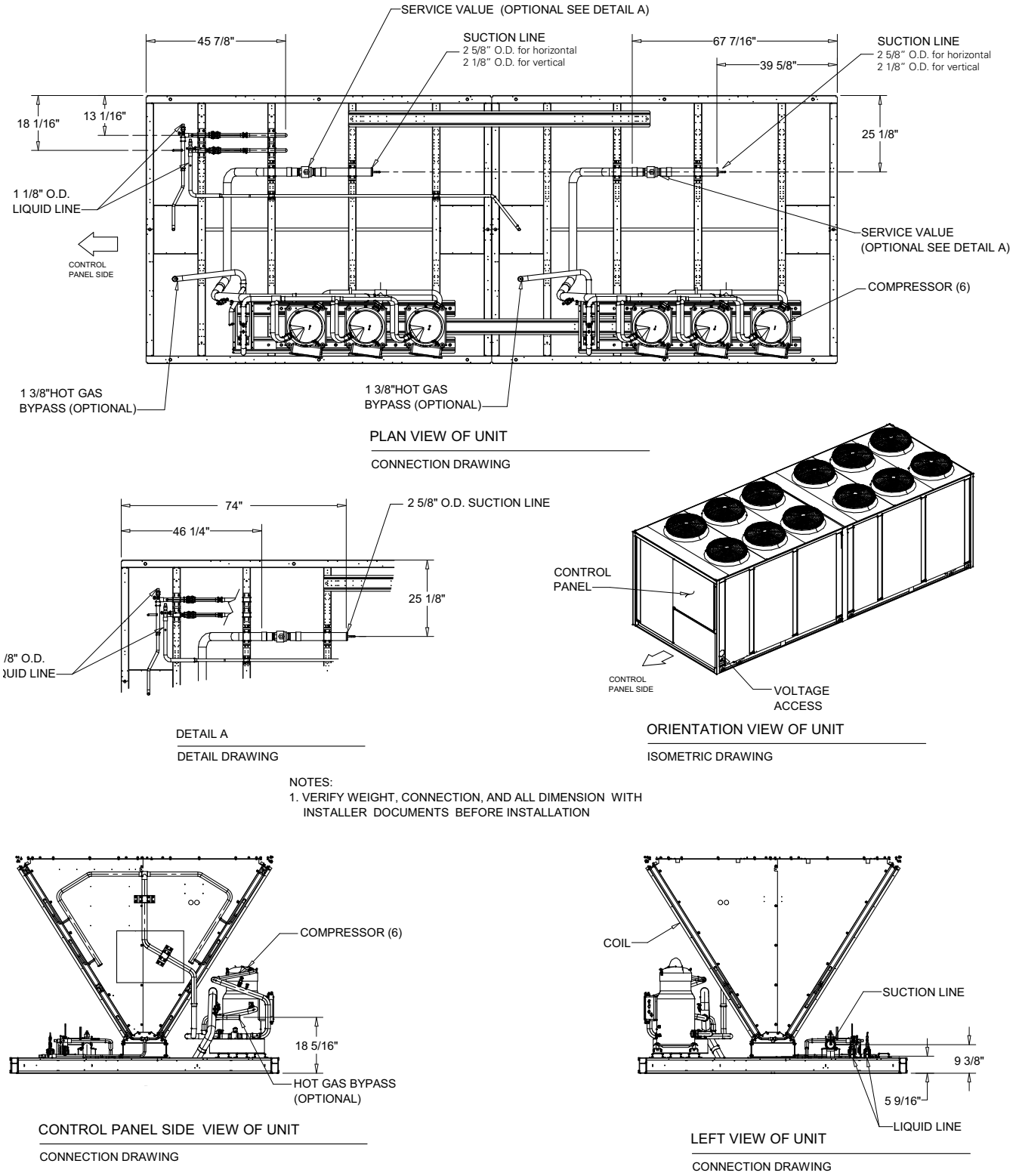

Figure 19. 20-Ton evaporator chiller

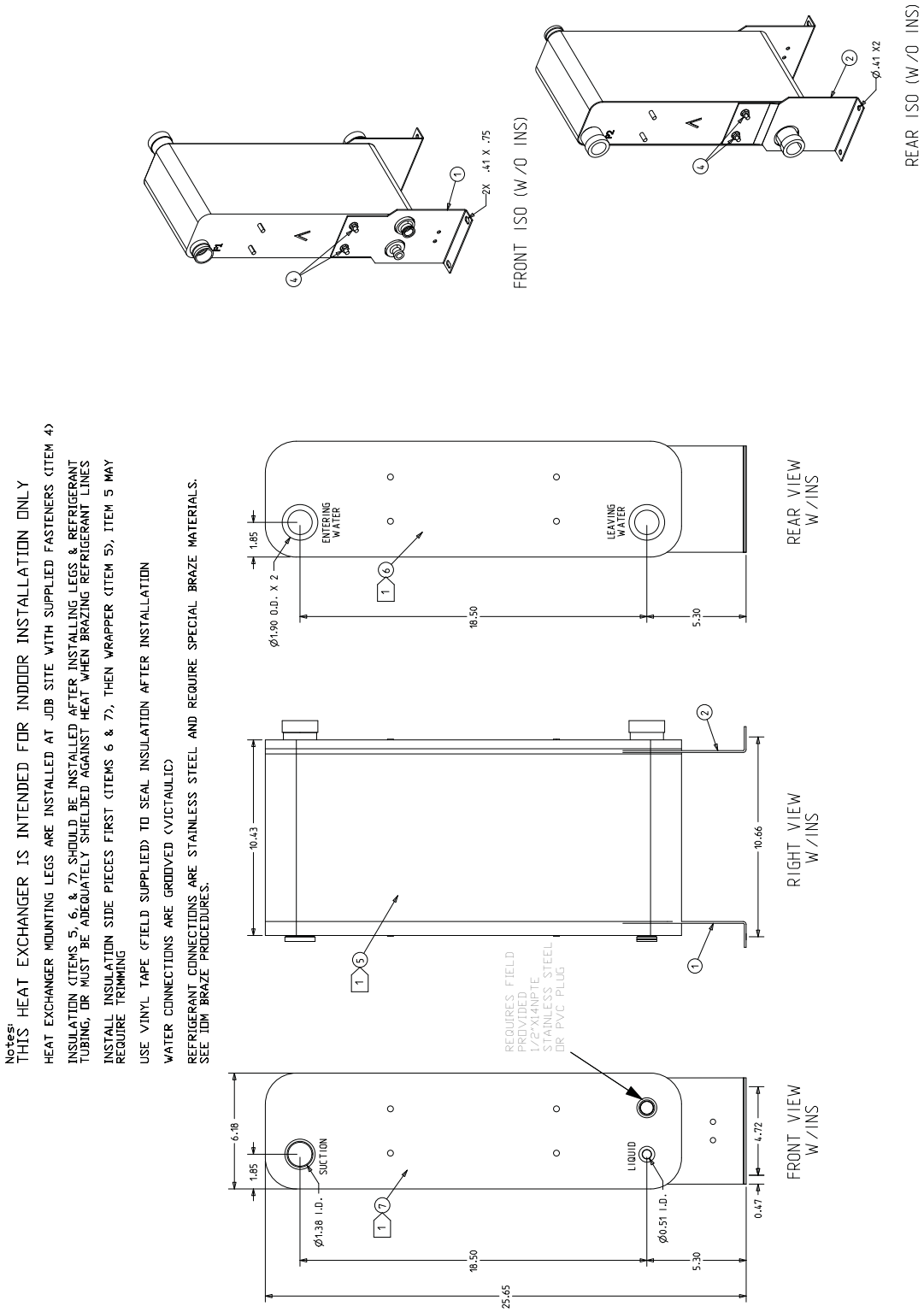

Figure 20. 25 and 30-Ton evaporator chiller

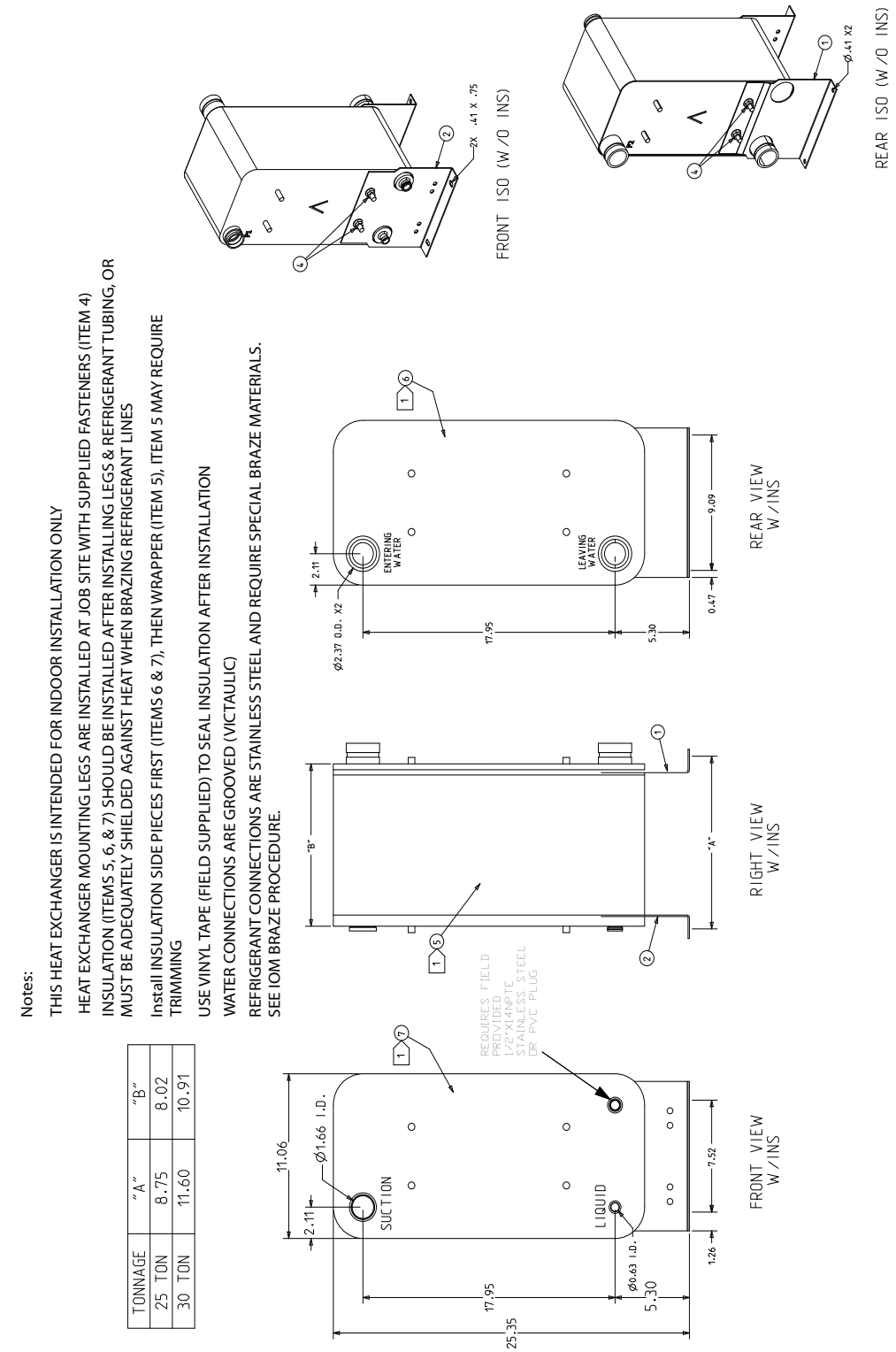

Figure 21. 40-Ton evaporator chiller

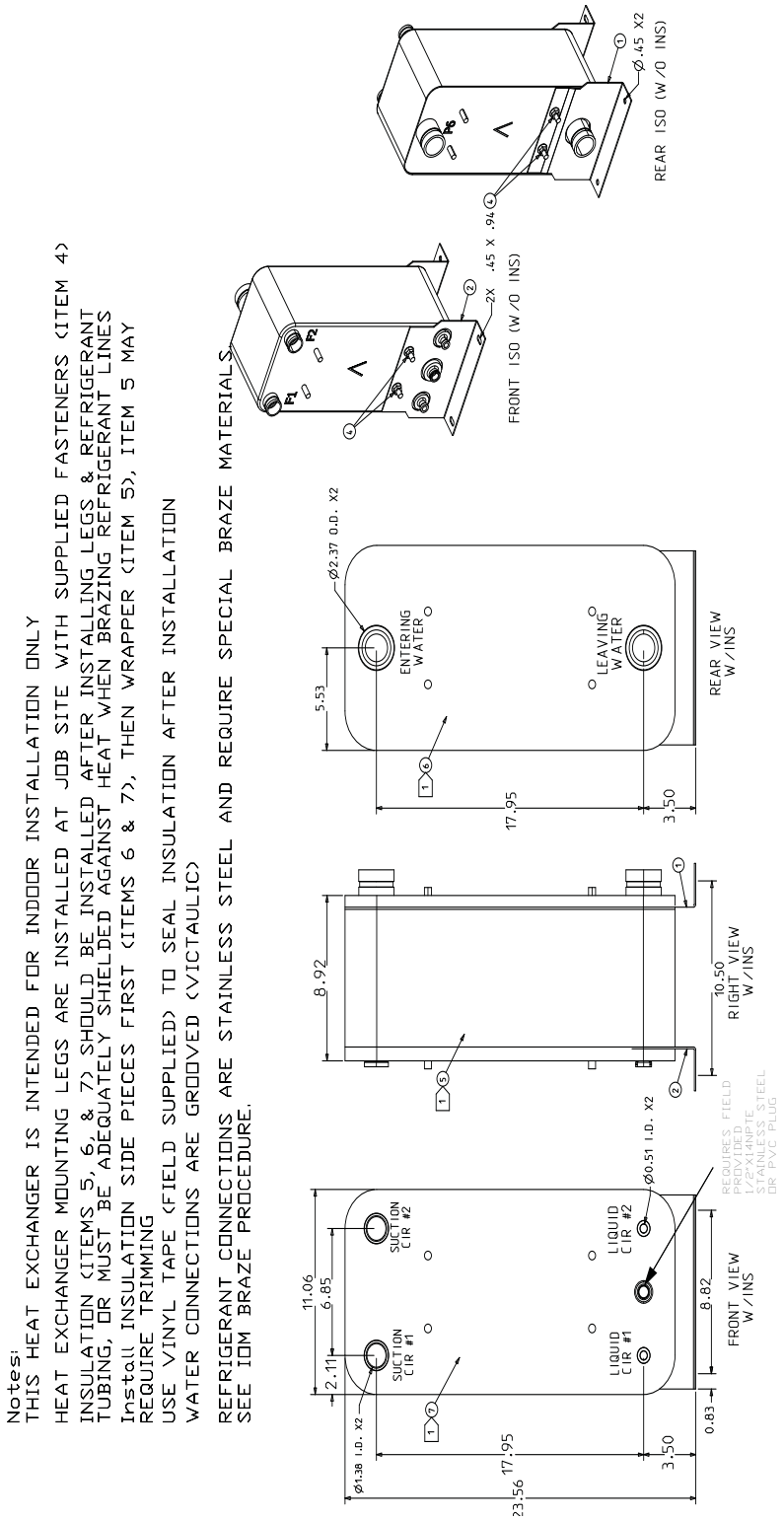

Figure 22. 50 and 60-Ton evaporator chiller

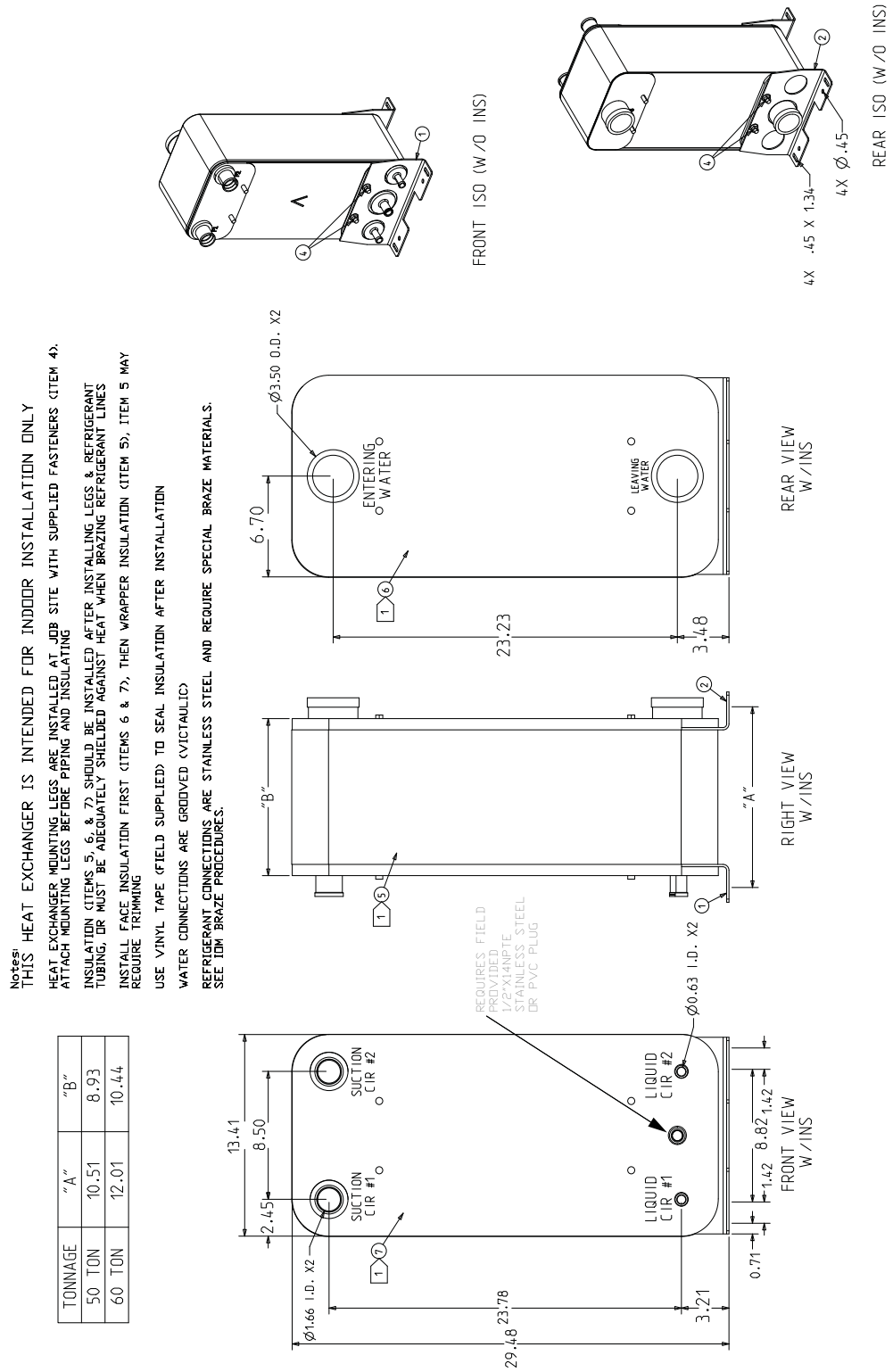

Figure 23. 80 and 120-Ton evaporator chiller

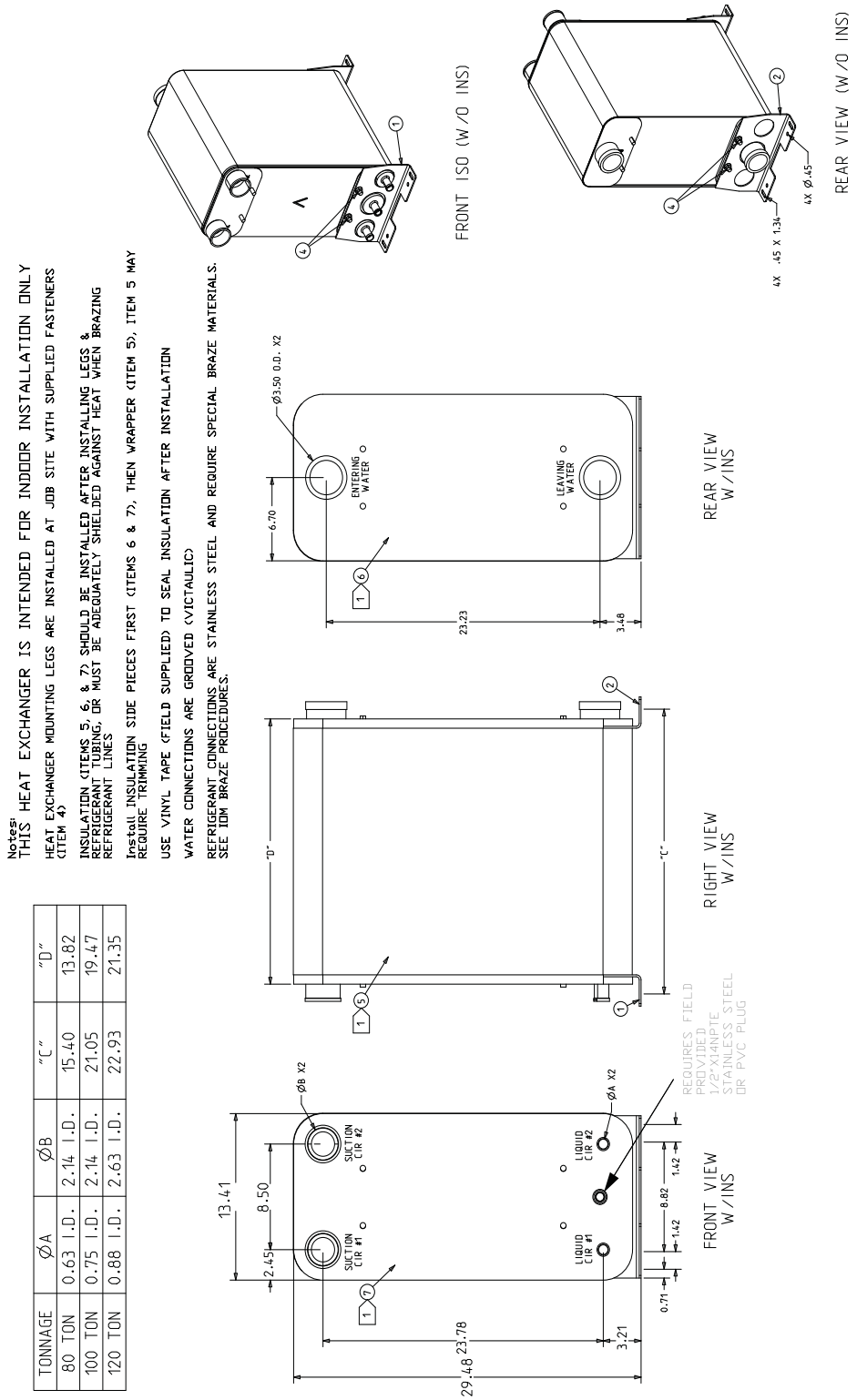

TONNAGE	ØA	ØB	"C"	"D"
80 TON	0.63 I.D.	2.14 I.D.	15.40	13.82
100 TON	0.75 I.D.	2.14 I.D.	21.05	19.47
120 TON	0.88 I.D.	2.63 I.D.	22.93	21.35

Table 3. Typical unit weights and point loading data 20 - 120 Ton units

		Weight		CG Locations		Weight on isolator mounting location (lbs.)							
Tons	Model	Shipping	Operating	X	Y	Loc. 1	Loc. 2	Loc 3.	Loc 4.	Loc. 5	Loc. 6	Loc. 7	Loc. 8
20	RAUJC20	1548	1573	40.8	33.0	475.5	383.3	403.2	311.0	---	---	---	---
25	RAUJC25	1598	1623	40.6	32.8	491.2	399.3	412.2	320.3	---	---	---	---
30	RAUJC30	1598	1623	40.6	32.8	491.2	399.3	412.2	320.3	---	---	---	---
40	RAUJC40	2482	2532	43.4	46.0	452.3	415.7	440.3	403.7	428.3	391.8	---	---
50	RAUJC50	2826	2868	52.3	45.9	365.5	331.0	427.8	393.3	700.1	650.3	---	---
60	RAUJC60	2803	2853	52.1	45.9	367.2	332.8	426.0	391.6	692.5	642.9	---	---
80	RAUJC80	4870	4940	86.0	55.8	798.3	462.1	786.7	450.5	785.1	448.9	772.4	436.1
100	RAUJC100	5539	5622	110.9	55.0	871.1	609.5	881.0	616.2	882.6	432.1	892.5	436.8
120	RAUJC120	5995	6121	111.5	54.2	988.2	614.7	948.3	587.4	941.8	583.0	901.8	555.8

Figure 24. Air-cooled condensing units

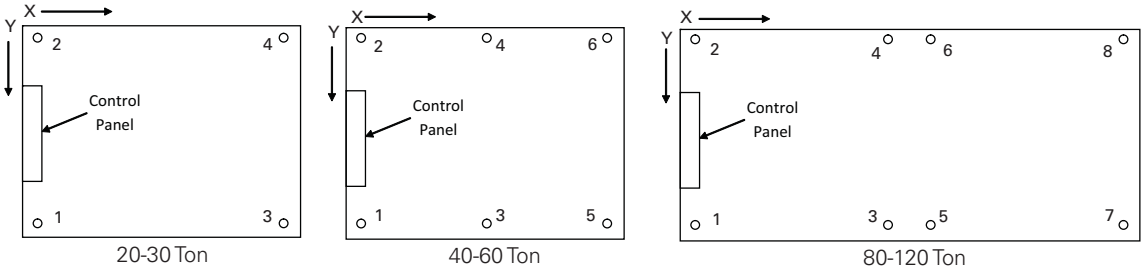

Table 4. Isolator mounting locations

		Mounting Location							
Unit Size		1	2	3	4	5	6	7	8
20/25/30	X	8″	8″	6' 8 1/8″	6' 8 1/8″	-	-	-	-
	Y	4' 10 3/4″	1 1/4″	4' 10 3/4″	1 1/4″	-	-	-	-
40	X	8″	8″	3' 8 1/8″	3' 8 1/8″	6' 8 1/4″	6' 8 1/4″	-	-
	Y	7' 3 1/8″	1 1/4″	7' 3 1/8″	1 1/4″	7' 3 1/8″	1 1/4″	-	-
50/60	X	8″	8″	4' 8 7/8″	4' 8 7/8″	8' 9 3/4″	8' 9 3/4″	-	-
	Y	7' 3 1/8″	1 1/4″	7' 3 1/8″	1 1/4″	7' 3 1/8″	1 1/4″	-	-
80	X	8″	8″	6' 8 1/8″	6' 8 1/8″	9' 1/8″	9' 1/8″	14' 1/4″	14' 1/4"
	Y	7' 3 1/8″	1 1/4″	7' 3 1/8″	1 1/4″	7' 3 1/8″	1 1/4″	7' 3 1/8″	1 1/4"
100/120	X	8″	8″	8' 9 5/8″	8' 9 5/8″	10' 1 5/8″	10' 1 5/8″	18' 3 1/4	18' 3 1/4″
	Y	7' 3 1/8″	1 1/4″	7' 3 1/8″	1 1/4″	7' 3 1/8″	1 1/4″	7' 3 1/8″	1 1/4"

Table 5. General data - 20 - 120 Ton remote chillers

Model Number	RAUJ-C20	RAUJ-C25	RAUJ-C30	RAUJ-C40	RAUJ-C50	RAUJ-C60	RAUJ-C80	RAUJ-D10	RAUJ-D12
Shipping weight, lbs	44	84	113	90	135	157	208	292	320
Operating weight, lbs	56	104	142	131	206	244	330	473	520
No. of refrigerant circuits	1	1	1	2	2	2	2	2	2
Water volume, Gal	1.4	2.2	3.3	4.6	7.9	9.7	13.6	20.1	22.2
Chiller refrig charge @ ARI condition, lbs	0.9	1.5	2.2	3.1	5.3	6.4	9.0	13.3	14.7
Minimum water flow rate, GPM	24	30	36	48	60	72	96	120	144
Maximum water flow rate, GPM	69	89	100	136	176	201	275	346	407
Chiller Water Supply/Return Pipe Size, in	2.0	2.0	2.0	3.0	3.0	3.0	4.0	4.0	4.0

Notes:
1. All heat exchangers are brazed plate.
2. All heat exchangers are single circuit on the water side.
3. Shipping and operating weights are approximate.
4. Refrigerant charge is approximate and for chiller only.
5. Applications with leaving water temperature below 42°F require freeze protection down to 15°F.
6. Maximum chiller operating ambient is 115°F.

⚠WARNING

Heavy Objects!

Ensure that all the lifting equipment used is properly rated for the weight of the unit being lifted. Each of the cables (chains or slings), hooks, and shackles used to lift the unit must be capable of supporting the entire weight of the unit. Lifting cables (chains or slings) may not be of the same length. Adjust as necessary for even unit lift. Other lifting arrangements could cause equipment or property damage. Failure to follow instructions above or properly lift unit could result in unit dropping and possibly crushing operator/ technician which could result in death or serious injury.

NOTICE:

Heat Exchanger or Compressor Damage!

Do not operate system below minimum specified water flow rate or below 42°F leaving water temperature without glycol. If water freezes inside the brazed plate heat exchanger, separation between refrigerant and water could be damaged and the heat exchanger must be replaced. Compressor damage could also occur requiring replacement and system cleanup.

Use spreader bars as shown in Figure 25. See installation manual or nameplate for unit weight. See installation instructions located inside the central panel for further rigging information.

A Rigging illustration and Center-of-Gravity dimensional data table is shown in Figure 25. Refer to the typical unit operating weights table before proceeding.

1. Rig the condensing unit as shown in Figure 25. Attach adequate strength lifting slings to all four lifting brackets in the unit base rail. Do not use cables, chains, or slings except as shown.
2. Install spreader bars, as shown in Figure 25, to protect the unit and to facilitate a uniform lift. The minimum distance between the lifting hook and the top of the unit should be 7 feet.
3. Test-lift the unit to ensure it is properly rigged and balanced, make any necessary rigging adjustments.
4. Lift the unit and position it into place.

Figure 25. Rigging and center-of-gravity data 20 - 60 Ton units (L) and rigging and center-of-gravity data 80 - 120 Ton units (R)

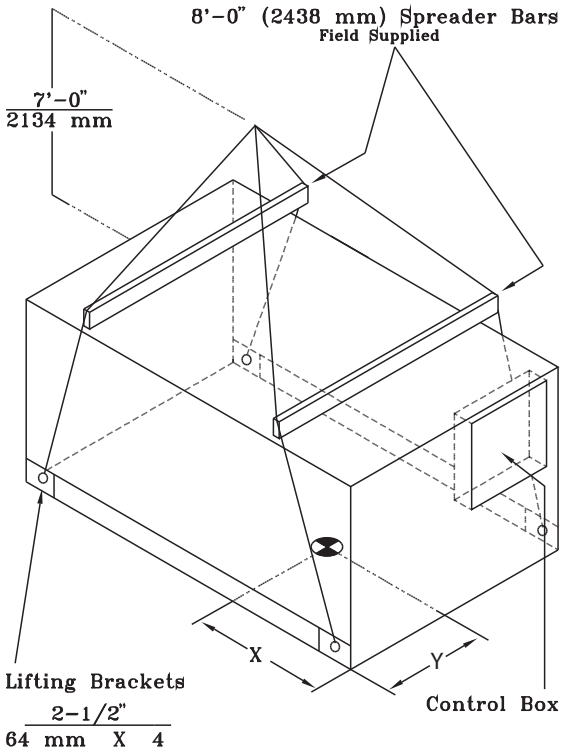

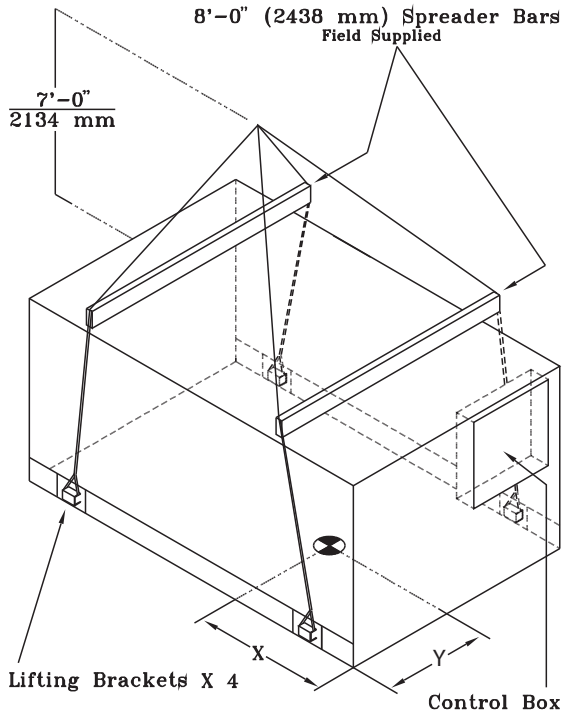

Unit Isolation

To minimize unit sound and vibration transmission, one of the following installation methods should be used:

1. Install the unit directly on an isolated (detached) concrete pad or on isolated concrete footings located at each unit load point.
2. Install the optional neoprene or spring isolators at each . Refer to the "Neoprene isolators" or "Spring isolator" section below.

Neoprene Isolators (20 - 60 Ton units)

⚠WARNING

Heavy Objects!

Use solid type blocks, i.e. 4" X 4" wood blocks or similar material to prevent collapsing. Keep hands and other body limbs clear of elevated base rail while installing isolators. Failure to do so could result in death or serious injury.

Install the neoprene isolators at each unit mounting (load) point, using the following procedure:

1. Elevate the unit (one side at a time) to allow access to the base rail mounting holes.
2. Align the mounting holes in the base rail of the unit with the holes in the top of the appropriate isolator. See Table 6, p. 33 and/or Table 7, p. 33 for the appropriate isolator for each load point.
3. Install a 1/2" NC bolt (field supplied) through the base rail of the unit into the threaded bolt hole of the isolator. Position the isolator to allow access to the mounting holes in the base of the isolator, then tighten securely.
4. Lower the unit and isolator onto the mounting surface. The maximum isolator deflection should be approximately 1/4 inch.
5. Secure the isolator to the mounting surface using the base holes in the isolator.
6. Level the unit carefully. Refer to the "Leveling the Unit" section.
7. After the unit is level, tighten the isolator base mounting bolts to secure them to the mounting surface.

Spring Isolators (20 - 120 Ton units)

⚠WARNING

Heavy Objects!

Use solid type blocks, i.e. 4" X 4" wood blocks or similar material to prevent collapsing. Keep hands and other body limbs clear of elevated base rail while installing isolators. Failure to do so could result in death or serious injury.

Install the spring isolators at each unit mounting (load) point, using the following procedure:

1. Elevate the unit (one side at a time) to allow access to the base rail mounting holes.
2. Align the mounting holes in the base rail of the unit with the positioning pin in the top of the appropriate isolator. Refer to Figure 26, p. 33 for the appropriate isolator for each load point.
3. Position the isolator to allow access to the mounting holes in the base of the isolator.
4. Lower the unit onto the isolator. The positioning pin on the isolator must engage into the hole of the base rail. The clearance between the upper and lower isolator housings should be approximately 1/4 to 1/2 inch. Refer to Figure 26, p. 33 A clearance greater than 1/2 inch indicates that shims are required to level the unit. Refer to the "Leveling the Unit" section.
5. Make minor clearance adjustments by turning the isolator leveling bolt (Figure 26, p. 33) clockwise to increase the clearance and counterclockwise to decrease the clearance. If proper isolator clearance cannot be obtained by turning the leveling bolt, level the isolators themselves. A 1/4 inch variance in elevation is acceptable.
6. Secure the isolator to the mounting surface using the base holes in the isolator.
7. After unit is level, tighten isolator base mounting bolts to secure them to the mounting surface.

Table 6. Typical neoprene isolator selection & location

Tons	Model	Shipping Weight	Operating Weight	Isolator Part No. On Mounting Location					
				Loc. 1	Loc. 2	Loc 3.	Loc 4.	Loc. 5	Loc. 6
20	RAUJC20	1548	1573	R-3-RED	R-3-RED	R-3-RED	R-3-RED	---	---
25	RAUJC25	1598	1623	R-3-RED	R-3-RED	R-3-RED	R-3-RED	---	---
30	RAUJC30	1598	1623	R-3-RED	R-3-RED	R-3-RED	R-3-RED	---	---
40	RAUJC40	2482	2532	R-3-RED	R-3-RED	R-3-RED	R-3-RED	R-3-RED	R-3-RED
50	RAUJC50	2826	2868	R-3-RED	R-3-RED	R-3-RED	R-3-RED	R-3-GREEN	R-3-GREEN
60	RAUJC60	2803	2853	R-3-RED	R-3-RED	R-3-RED	R-3-RED	R-3-GREEN	R-3-GREEN

Table 7. Typical spring isolator selection and location 20-120 Ton units

Mdl RA	Weights		CG Locations		Isolator Part No. On Mounting Location							
Tons	Ship	Oper	X	Y	Loc. 1	Loc. 2	Loc 3.	Loc 4.	Loc. 5	Loc. 6	Loc. 7	Loc. 8
20	1548	1573	40.8	33.0	CP-1D-510	CP-1D-510	CP-1D-510	CP-1D-340	---	---	---	---
25	1598	1623	40.6	32.8	CP-1D-510	CP-1D-510	CP-1D-510	CP-1D-340	---	---	---	---
30	1598	1623	40.6	32.8	CP-1D-510	CP-1D-510	CP-1D-510	CP-1D-340	---	---	---	---
40	2482	2532	43.4	46.0	CP-1D-510	CP-1D-510	CP-1D-510	CP-1D-510	CP-1D-510	CP-1D-510	---	---
50	2826	2868	52.3	45.9	CP-1D-510	CP-1D-340	CP-1D-510	CP-1D-510	CP-1D-900	CP-1D-675	---	---
60	2803	2853	52.1	45.9	CP-1D-510	CP-1D-340	CP-1D-510	CP-1D-510	CP-1D-900	CP-1D-675	---	---
80	4870	4940	86.0	55.8	CP-1D-900	CP-1D-510	CP-1D-900	CP-1D-510	CP-1D-900	CP-1D-510	CP-1D-900	CP-1D-510
100	5539	5622	110.9	55.0	CP-1D-900	CP-1D-675	CP-1D-900	CP-1D-675	CP-1D-900	CP-1D-510	CP-1D-900	CP-1D-510
120	5995	6121	111.5	54.2	C2P-1D-1020	CP-1D-675	C2P-1D-1020	CP-1D-675	C2P-1D-1020	CP-1D-675	C2P-1D-1020	CP-1D-675

Figure 26. Spring isolators 20-120 Ton data

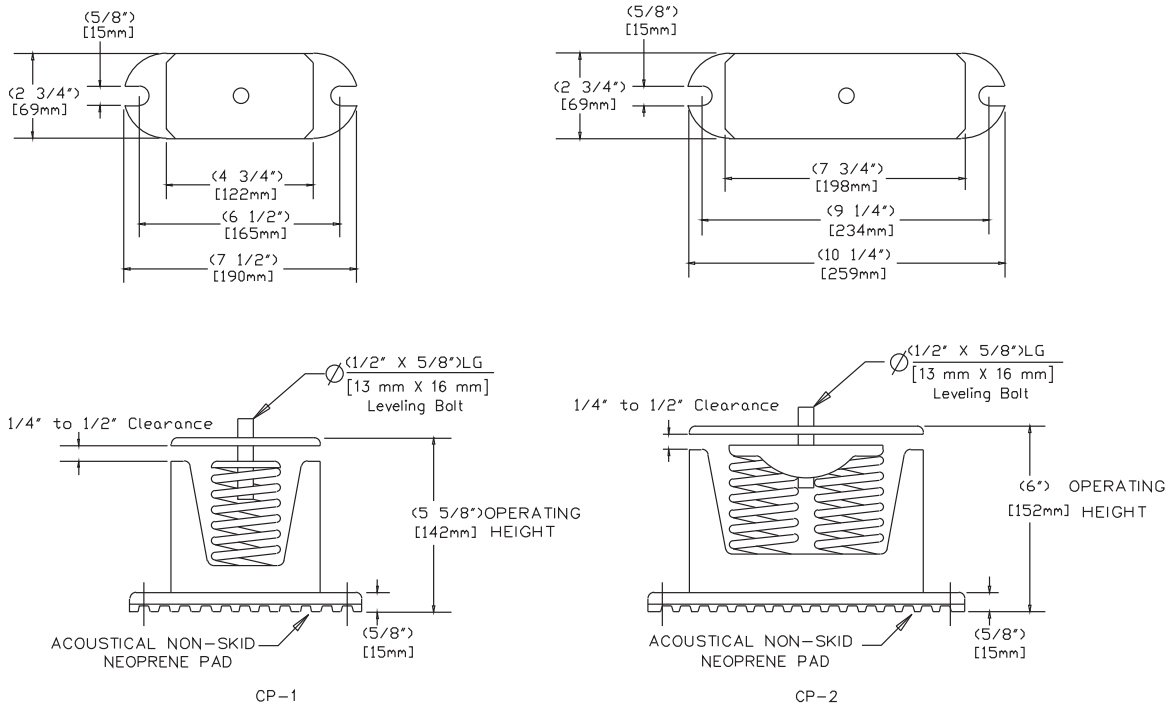

Installation

Foundation

If the unit is installed at ground level, elevate it above the snow line. Provide concrete footings at each support location or a slab foundation for support. See Table 3, p. 30 for the unit operating and point loading weights when constructing the footing foundation.

Anchor the unit to the footings or slab using hold down bolts or isolators. Isolators should be installed to minimize the transmission of vibrations into the building. See section "Unit Isolation," p. 32 for spring or rubber isolator installation instructions.

For rooftop applications, ensure the roof is strong enough to support the unit. See Table 3, p. 30 for the unit operating weights.

Anchor the unit to the roof with hold-down bolts or isolators. Follow the instructions in section "Unit Isolation," p. 32 "for proper isolator placement and installation.

Check with a roofing contractor for proper waterproofing procedures.

Unit Isolation

To minimize unit sound and vibration transmission, one of the following installation methods should be used:

1. Install the unit directly on an isolated (detached) concrete pad or on isolated concrete footings located at each unit load point.
2. Install the optional neoprene or spring isolators at each mounting location. See "Neoprene Isolators (20 - 60 Ton units)," p. 32 or "Spring Isolators (20 - 120 Ton units)," p. 32.

Leveling the Unit

Before tightening the mounting bolts, level the unit carefully. Use the unit base rail as a reference. Level the unit to within 1/4 inch over its entire length. Use shims if non-adjustable isolators (neoprene) are used.

If adjustable isolators (spring) are used, ensure that the proper isolator housing clearance is maintained while leveling the unit. Isolators are identified by color and/or an isolator part number. Shims under the isolators may be required if the unit cannot be leveled using the isolator leveling bolt.

General Unit Requirements

The checklist listed below is a summary of the steps required to successfully install a commercial air cooled condenser. This checklist is intended to acquaint the installing personnel with what is required in the installation process. It does not replace the detailed instruction called out in the applicable sections of this manual.

- Install freezestat well and freezestat bulb in the water outlet piping.
- Verify that the power supply complies with the unit nameplate specifications.
- Check the unit for shipping damage and material shortage; file a freight claim and notify Trane office.
- Verify that the installation location of the unit will provide the required clearance for proper operation.
- Install appropriate isolators, if required.

Refrigerant Piping Requirements

- Install properly sized liquid line(s) between the liquid line connections on the unit and the evaporator. See section "Refrigerant Piping," p. 38 for recommended line components and guidelines.
- Install a properly sized liquid line isolation solenoid valve in each liquid line.
- Install refrigerant rated shutoff valves in the liquid line(s) to isolate the filter drier(s) for service.
- Install a properly sized filter drier in each liquid line.
- Install a properly sized filter in each suction line.
- Install properly sized suction line(s) between the suction line connections on the unit and the evaporator. See "Refrigerant Piping," p. 38 for recommended line components and guidelines.
- Install properly sized hot gas bypass line(s) between the hot gas bypass connections on the unit and the evaporator.
- Insulate the suction line.
- Leak test the system. See "Leak Testing Procedure," p. 44 for recommended procedures.

EVP Chilled Water Piping Requirements

- Install properly sized chilled water pipe between the EVP chiller and the supporting equipment. See "Chilled Water Piping," p. 45 for recommended system components and guidelines.
- Install supply and return water side pressure gauges (with isolation valves.)
- Install thermometers in water supply and return piping.
- Install isolation (shutoff) valves in water supply and return piping.
- Install a properly sized strainer in the supply piping.
- Install blowdown (recommended) valve or plug in strainer cleanout.
- Install a balancing valve in the return piping.
- Install a water flow switch in the return piping.
- Install chilled solution sensor well and sensor in the water outlet piping.

- Install chiller piping drain with shutoff valve.
- Install 1/2” x 14 NPT stainless steel or PVC plug in braze plate chiller body.
- Flush the chilled solution piping system, if applicable.
- Connect the chilled solution piping to the chiller.

Note: *The braze plate chiller is intended for indoor application. If a subfreezing location is required, contact Trane for installation precautions required to prevent damage.*

Note: *If using an acidic, commercial flushing solution, to prevent damage to the internal evaporator components, flush all chilled solution piping before making the final connection to the EVP chiller.*

Main Electrical Power Requirements

⚠WARNING

Hazardous Voltage!

Disconnect all electric power, including remote disconnects before servicing. Follow proper lockout/tagout procedures to ensure the power cannot be inadvertently energized. Failure to disconnect power before servicing could result in death or serious injury.

⚠WARNING

Proper Field Wiring and Grounding Required!

All field wiring MUST be performed by qualified personnel. Improperly installed and grounded field wiring poses FIRE and ELECTROCUTION hazards. To avoid these hazards, you MUST follow requirements for field wiring installation and grounding as described in NEC and your local/state electrical codes. Failure to follow code could result in death or serious injury.

- Verify the power supply meets the required power requirements of the system.
- Install power wiring in accordance with all applicable codes.
- Install and connect properly sized power supply wiring, with over current protection, to the main power terminal block (1TB1) or to an optional factory mounted non-fused disconnect switch (1S1) in the control panel.
- Install and connect properly sized power supply wiring, with over current protection, to the proper termination point in the air handling unit (If applicable).
- Install proper grounding wires to an earth ground.
- Install and connect properly sized power supply wiring, with overcurrent protection, to the proper termination point for the chilled solution pump (EVP units only).

Field Installed Control Wiring Requirements

⚠WARNING

Hazardous Voltage!

Disconnect all electric power, including remote disconnects before servicing. Follow proper lockout/tagout procedures to ensure the power cannot be inadvertently energized. Failure to disconnect power before servicing could result in death or serious injury.

⚠WARNING

Proper Field Wiring and Grounding Required!

All field wiring MUST be performed by qualified personnel. Improperly installed and grounded field wiring poses FIRE and ELECTROCUTION hazards. To avoid these hazards, you MUST follow requirements for field wiring installation and grounding as described in NEC and your local/state electrical codes. Failure to follow code could result in death or serious injury.

115 Volt Control Wiring (All Units)

- Verify that the Control transformer (1T1) is wired for the proper operating voltage.
- Connect properly sized wiring to the liquid line solenoid valve(s).
- The phase monitor (1U3) when powered with line voltage properly phased and balanced has a green LED energized.
- Connect properly sized wiring to the hot gas bypass solenoid valve(s), if applicable, to operate with the unit. Refer to the unit wiring diagram that shipped with the unit.
- Install the interlock circuitry wiring for the air handling unit to permit compressor operation after the fan has started, i.e., proof of fan operation device, fan starter auxiliary contacts or pump starter station, pump starter auxiliary contacts, proof of flow device, etc. Refer to the field connection diagram that shipped with the unit for interlocking information.
- Install properly sized power supply wiring, with over current protection, to the proper termination point for the field provided economizer actuator(s), if applicable. Refer to the “Economizer Actuator Circuit” illustrated in the “Field Installed Control Wiring” section.

”No Controls” Units

- A field provided “step” controller must be installed and properly wired. (Controller will have 2, 4 or 6 steps, depending on unit configuration.) Refer to the field connection diagram for connection information.
- Install proper grounding wires to an earth ground.

- Install an outside air thermostat in series with the flow switch to stop or prevent the unit from operating below the recommended ambient temperatures.

EVP Chiller Units

- Install proper grounding wires to an earth ground.
- Install an outside air thermostat in series with the flow switch to stop or prevent the unit from operating below the recommended ambient temperatures.

Low Voltage Wiring (AC & DC)

⚠WARNING

Hazardous Voltage!

Disconnect all electric power, including remote disconnects before servicing. Follow proper lockout/tagout procedures to ensure the power cannot be inadvertently energized. Failure to disconnect power before servicing could result in death or serious injury.

⚠WARNING

Proper Field Wiring and Grounding Required!

All field wiring MUST be performed by qualified personnel. Improperly installed and grounded field wiring poses FIRE and ELECTROCUTION hazards. To avoid these hazards, you MUST follow requirements for field wiring installation and grounding as described in NEC and your local/state electrical codes. Failure to follow code could result in death or serious injury.

Variable Air Volume (VAV) Units

- Install a field provided remote system control switch to activate the system.
- Connect properly sized wiring from the field provided economizer, if applicable, to the discharge air controller in the unit control panel.
- Install and connect properly sized wiring from the night setback relay contacts to the proper termination points inside the unit control panel. Verify the appropriate jumpers have been removed.
- Install the suction line thermostat onto the suction line. Connect properly sized wiring between the thermostat and terminal strip 7TB7 in the unit control panel.
- Install the discharge air sensor and wire it to the discharge air controller with shielded cable.

Constant Volume Units

- Install the zone thermostat, with or without switching subbase.
- Connect properly sized control wiring to the proper termination points between the zone thermostat and the unit control panel.
- Install the discharge air sensor and connect it to the master energy controller (MEC) with shielded cable.
- Connect properly sized wiring from the field provided economizer, if applicable, to the master energy controller (MEC) in the unit control panel.

EVP Chillers

- Install the appropriate jumpers on the chilled water temperature controller for hot gas bypass operation (if applicable). Refer to the control wiring diagram that shipped with the unit for jumper details.
- Install and connect the chilled water temperature sensor to the chilled solution temperature controller with shielded cable.
- Install the proper staging resistor on to the chilled water temperature controller.

Refrigerant Line Components

Suction line refrigerant components necessary for field installation in the suction line are a filter (Core Type), access valves (ports), Frostat™ control for coil frost protection, and ball shutoff valves. They are placed in the suction line as illustrated in Figure 27, p. 38.

The required liquid line refrigerant components include a filter drier (Core Type), access valve(s) or (ports), solenoid valve(s), moisture indicating sight glass, expansion valve(s), and ball shutoff valve(s). They are placed in the liquid line as shown in Figure 27.

Suction And Liquid Line Filter/Filter Drier (Field Supplied)

Install the filter in the suction line upstream of the compressors. To prevent oil accumulation, suction filters should be installed vertical with the outlet at the bottom as shown in Figure 27 or no more than 45° from vertical.

Install the filter drier in the liquid line as close as possible to the expansion valves. Locate them upstream of the moisture indicator and solenoid valve.

For recommended components, refer to the latest edition of the Applications Guide SS-APG012-EN.

Liquid Line Moisture Indicator Sight Glass

To aid in troubleshooting, install a moisture indicator sight glass in the liquid line near the evaporator, downstream of the solenoid valve prior to any branch takeoffs to the expansion valve. The sight glass should not be used to determine adequate refrigerant charge. Liquid temperature and discharge pressure measurements are required to determine the proper charge. Note that under some conditions, charging until the sight glass is solid liquid will overcharge the system and reduce compressor reliability. Refer to "Compressor Startup" for proper system charging.

For recommended components, refer to the latest edition of Applications Guide SS-APG012-EN.

Liquid Line Solenoid Valves

Liquid line isolation solenoid valves (one per refrigeration circuit) are required for refrigerant migration control into evaporator during “Off” cycle and should be connected as illustrated in applicable field connection diagram.

For recommended components, see latest edition of application guide, SS-APG012-EN.

Thermostatic Expansion Valve (TXV)

Trane recommends a balance-ported externally equalized valve in order to maintain satisfactory superheat control down to lower valve loading conditions and to compensate for pressure drops between the expansion valve and superheat control point (evaporator refrigerant outlet). For fin and tube evaporator applications, a 30% bleed port TXV is required for 20-60T units and a 15% bleed port is required for 80-120T units.

In order to get proper refrigerant distribution into the coil, an expansion valve is required for each coil distributor.

TXV for Remote Chiller

Piping between TXV and Chiller, a braze plate heat exchanger (BPHE), must be 8-12” long and same size as BPHE inlet ID. Field supplied reducer(s) may be required at TXV. A bleed port valve is not required with brazed plate heat exchanger applications.

Note: *Install reducers at the TXV outlet only.*

See Figure 19, p. 25 through Figure 23, p. 29 for BPHE inlet dimensions.

Table 8. Valve selection

Bleed	Applicable Units	Capacity Min	Capacity Max	Selection[a]	Alternate[a]
0	Any BPHE ALL Fin and Tube OD Coils	1.5	2	BBIZE-1-1/2-GA	ERZE-1-1/2-GA
		2	3	BBIZE-2-GA	ERZE-2-GA
		2.5	4	BBIZE-3-GA	ERZE-3-GA
		3.5	5.5	BBIZE-4-GA	ERZE-4-GA
		4.5	6.5	BBIZE-5-GA	ERZE-5-GA
		5.5	7.5	BBIZE-6-GA	ERZE-6-GA
		6.5	10.5	BBIZE-8-GA	ERZE-8-GA
		8.5	13.5	BBIZE-12-1/2-GA	ERZE-12-1/2-GA
		11	16.5	BBIZE-15-GA	ERZE-15-GA
		13	22	OZE-20-GA	
		17	26	OZE-25-GA	
		20.5	39	OZE-35-GA	
		30.5	59	OZE-50-GA	
		45.5	70	OZE-60-GA	
15	80-120 MCHE	2	2.5	BBIZE-1-1/2-GA-B15	EBQE Body + BQC-A-B15 + KT-45-ZGA
		2.5	3	BBIZE-2-GA-B15	EBQE Body + BQC-B-B15 + KT-45-ZGA
		3	4.5	BBIZE-3-GA-B15	EBQE Body + BQC-B-B15 + KT-45-ZGA
		4	6	BBIZE-4-GA-B15	EBQE Body + BQC-C-B15 + KT-45-ZGA
		5	7.5	BBIZE-5-GA-B15	EBQE Body + BQC-C-B15 + KT-45-ZGA
		6	9	BBIZE-6-GA-B15	ERZE-8-GA-B15
		7	12	BBIZE-8-GA-B15	ERZE-8-GA-B15
		9.5	15.5	BBIZE-12-1/2-GA-B15	ERZE-12-1/2-GA-B15
		12.5	19	BBIZE-15-GA-B15	ERZE-15-GA-B15
		15	25	OZE-20-GA-B15	
		19.5	30	OZE-25-GA-B15	
		23.5	45	OZE-35-GA-B15	
		35	68	OZE-50-GA-B15	
		52.5	70	OZE-60-GA-B15	
		69.5	70	OZE--GA-B15	
30	20-60T MCHE	2	3	BBIZE-1-1/2-GA-B30	
		2.5	3.5	BBIZE-2-GA-B30	
		3.5	5	BBIZE-3-GA-B30	
		4.5	7	BBIZE-4-GA-B30	
		6	8.5	BBIZE-5-GA-B30	
		7	10	BBIZE-6-GA-B30	
		8	13.5	BBIZE-8-GA-B30	
		11	17.5	BBIZE-12-1/2-GA-B30	
		14	21.5	BBIZE-15-GA-B30	
		17	28.5	OZE-20-GA-B30	
		22	30	OZE-25-GA-B40	

(a) Valve part numbers with “-ZGA” in place of “-GA”, may be used interchangeably.

Access Valves (Ports)

The access ports in the liquid line allows the unit to be charged with liquid refrigerant and is used to determine sub-cooling.

The access ports in the suction line allow the operating suction pressure to be checked across the suction line filter. These ports are usually a Schrader valve with core.

Ball Shutoff Valves

The ball shutoff valve allows for isolation of the Filter/Filter Drier for easier core replacement.

Two ball shutoff valves equal to the OD Tubing size for both the liquid line and suction line are required.

Frostat™ Coil Frost Protection

The Frostat control is the preferred method of coil frost protection. The Frostat control bulb is mechanically attached to the suction line near the evaporator and wired to the unit control panel. Refer to the proper field connection diagram for details.

Figure 27. Typical placement of split system piping components

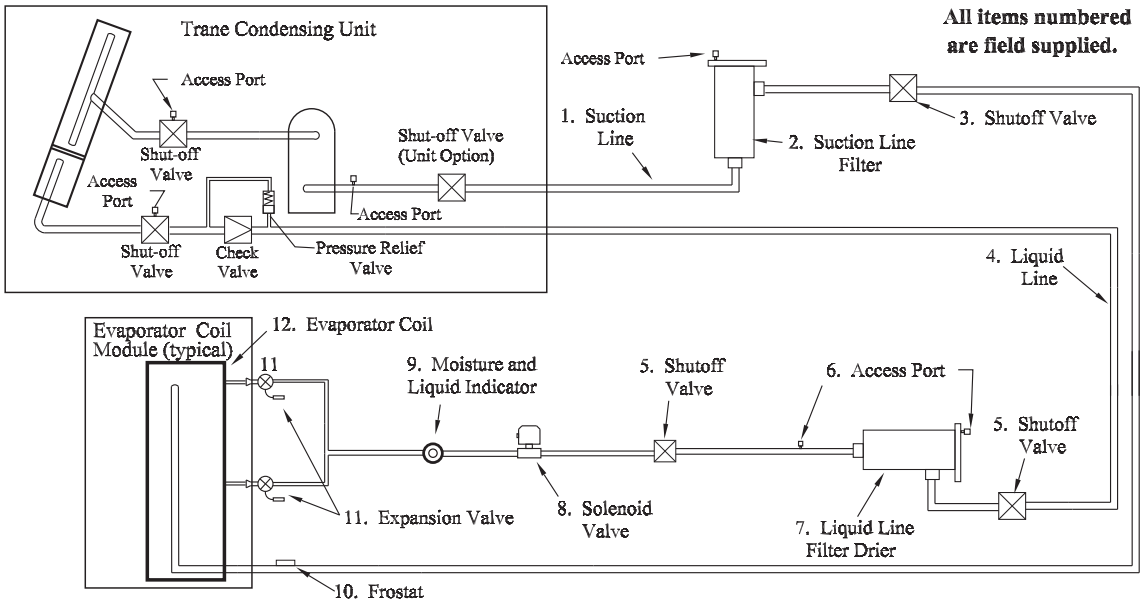

Split System Component Number Definitions

1. Interconnecting Suction Line Tubing
2. Suction Line Filter
3. Shutoff Valves - Manual ball valves
4. Interconnecting Liquid Line Tubing. If risers exceed 10 feet, Trane must review the application
5. Shutoff valves - Manual ball valves
6. Access Ports
7. Liquid Line Filter Drier
8. Liquid Line Solenoid Valve
9. Moisture and Liquid Indicator
10. Frostat™ (Required for coil freeze protection)
11. Expansion Valve (One Expansion Valve for each Coil Distributor)
12. Evaporator Coil

Refrigerant Piping

Refrigerant piping must be properly sized and applied. These two factors have a very significant effect on both system performance and reliability.

Note: *Use Type "L" refrigerant grade copper tubing only.*

NOTICE:

Equipment Damage!

Compressors contain POE oil which readily absorbs moisture directly from the air. Moisture absorbed by POE oil is very difficult to remove by evacuation and can cause compressor failure. To prevent contamination, this unit shipped sealed containing dry nitrogen. Minimize the amount of time the system is open to the atmosphere. When open, flow dry nitrogen through the piping to prevent atmospheric moisture from contacting compressor POE oil.

Refrigerant Piping should be sized and laid out according to the job plans and specifications. This should be done when the system components are selected.

Suction Line Piping

Proper suction line sizing is required to guarantee that oil is returned to the compressor throughout the operating system. Furthermore, the line must be sized so that the pressure drop does not excessively affect capacity or efficiency. To accomplish both, it may be necessary to have two sizes, one for horizontal run and vertical drops, and another for the vertical lifts. The suction line size pre-selected in Table 9, p. 39 are independent of the line length for a properly charged RAUJ unit operating in a normal air conditioning application.

For more information, refer to the latest edition of Application Guide SS-APG012-EN.

1. Do not use suction line traps.
2. Do not use double risers.
3. Avoid putting liquid lines underground.
4. Route suction lines as short and direct as possible.
5. Slope suction lines toward the evaporator ¼-inch to 1-inch for every 10 feet.
6. Insulate the suction lines.
7. The suction line filter should be as close to the compressor as possible.

Note: *If Suction Riser Exceeds 50 Feet, Trane Must Review The Application.*

Table 9. Suction line interconnecting tubing

Capacity	OD unit connection (Per circuit)	Recommended field piping	
		OD Horizontal (Per Circuit)	OD Vertical (Per Circuit)
20 Ton	1-5/8"	1-5/8"	1-5/8"
25 Ton	1-5/8"	2-1/8"	1-5/8"
30 Ton	1-5/8"	2-1/8"	2-1/8"
40 Ton	1-5/8"	1-5/8"	1-5/8"
50 Ton	1-5/8"	2-1/8"	1-5/8"
60 Ton	1-5/8"	2-1/8"	2-1/8"

Table 9. Suction line interconnecting tubing

Capacity	OD unit connection (Per circuit)	Recommended field piping	
		OD Horizontal (Per Circuit)	OD Vertical (Per Circuit)
80 Ton	2-5/8"	2-1/8"	2-1/8"
100 Ton	2-5/8"	2-5/8"	2-1/8"
120 Ton	2-5/8"	2-5/8"	2-1/8"

Note: If risers exceed 50 feet, the application must be reviewed by Trane.

Liquid Line Piping

Oversized liquid lines reduce compressor reliability due to excess refrigerant in the system, and system operation becomes more charge critical due to liquid thermal expansion into the condenser at higher ambients. Conversely, liquid line OD needs to be big enough to allow for adequate subcooling entering the expansion valve at high load conditions. The preselected lines in Table 10, p. 40 are independent of line length or rise within the limitations of the latest edition of the Application Guide SS-APG012-EN.

The liquid line should have a slight slope in the direction of flow so that it can be routed with the suction line.

The unit has a liquid line check valve that prevents liquid refrigerant from flowing backward through the liquid line, filling the condenser, and overflowing to the compressor during the “Off” cycle. A relief valve is also installed to prevent the buildup of high pressure in the liquid line when the unit is off. For proper operation of the relief valve, the liquid line service valve should not be in the back seated position but cracked open so the relief valve (and the fan pressure switch) is open to the condenser. The line that connects the outlet of the 235 psig relief valve to the liquid line service valve must not be removed.

For more information, refer to the latest edition of Application Guide SS-APG012-EN.

1. Avoid putting liquid lines underground.
2. Route liquid lines as short and direct as possible.
3. Slope liquid lines away from the condensing unit 1-inch for every 10 feet.
4. Only insulate liquid lines that pass through heated areas.
5. Wire solenoid valves according to the field connection diagram for proper operation.
6. The liquid line filter drier should be as close to the solenoid valve as possible.

Note: *If the liquid line riser exceeds 10 feet, refer to Tube Size and Component Selection, publication number SS-APG012-EN*

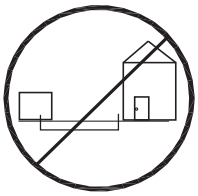

Table 10. Liquid line interconnecting tubing

Capacity	OD unit connection (Per Circuit)	Recommended field piping	
		OD Horizontal (Per Circuit)	OD Vertical (Per Circuit)
20 Ton	7/8"	5/8"	5/8"
25 Ton	7/8"	7/8"	7/8"
30 Ton	7/8"	7/8"	7/8"
40 Ton	7/8"	5/8"	5/8"
50 Ton	7/8"	7/8"	7/8"
60 Ton	7/8"	7/8"	7/8"
80 Ton	1-1/8"	1-1/8"	1-1/8"
100 Ton	1-1/8"	1-1/8"	1-1/8"
120 Ton	1-1/8"	1-1/8"	1-1/8"

Table 10. Liquid line interconnecting tubing

Capacity	OD unit connection (Per Circuit)	Recommended field piping	
		OD Horizontal (Per Circuit)	OD Vertical (Per Circuit)

Note: If risers exceed 10 feet, refer to Tube Size and Component Selection, publication SS-APG012-EN.

Typical Field-Installed Evaporator Piping: Dual-Circuit Examples

1. Install the TXV directly to the unit liquid connection.
2. Locate the TXV bulb midway between the 90 degrees bends on top of the suction line as illustrated in Figure 28, p. 40 and Figure 29, p. 41.
3. Secure bulb to suction line with two clamps provided by manufacturer and insulate bulb.
4. Install the Frostat™ according to instructions enclosed in the kit as close to evaporator as possible. Although it may look like a trap, it is the result of going down past the last outlet and turning to go up.

Note: *All 20-60T units will require 30% bleed TXVs. All 80-120T units will require 15% bleed TXVs. This does not apply if they are connected to remote chiller evaporators (see next section).*

Figure 28. Face-split

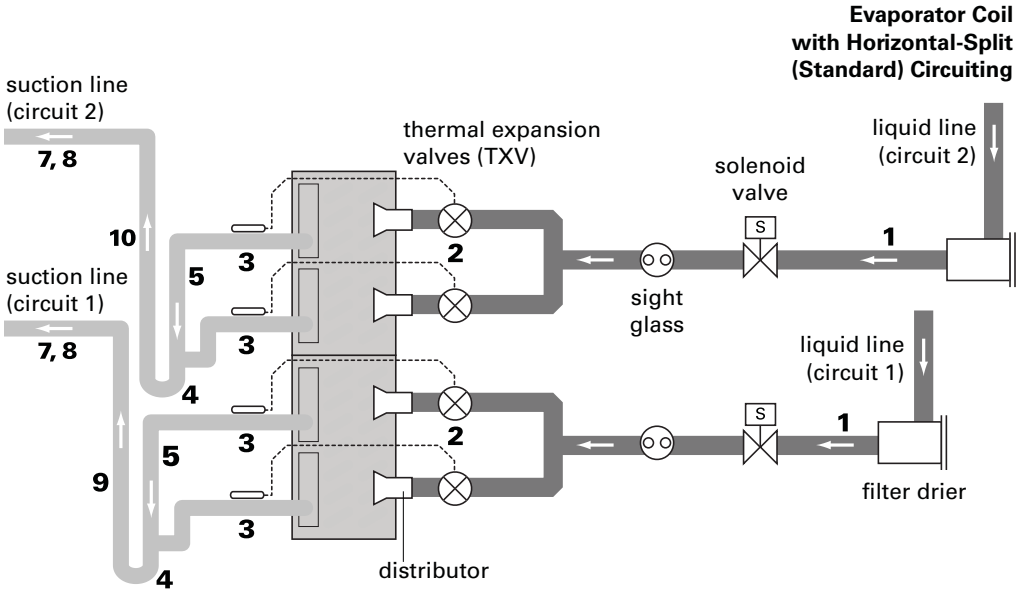

Figure 29. Intertwined

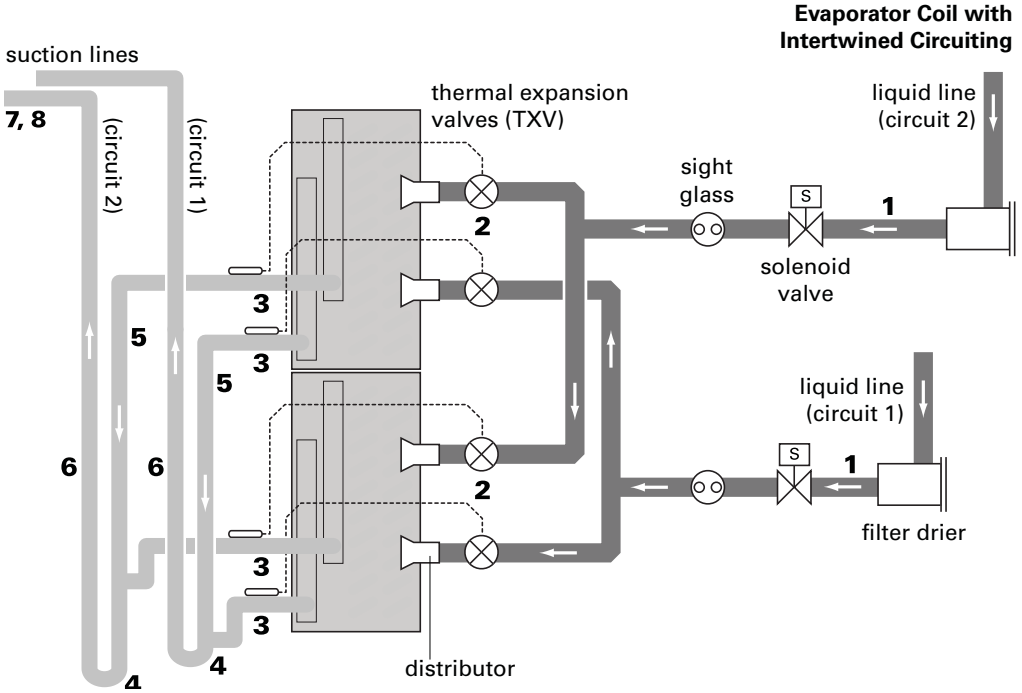

Typical Field-Installed EVP Chiller Evaporator Piping

NOTICE:

Equipment Damage!

The braze connections at the heat exchanger are stainless steel. Use 40-45% silver brazing alloy BAg-7 or BAg-29 for copper to steel refrigerant connections at the chiller. Use flux sparingly to prevent plugging heat exchanger flow passages. Improper methods could result in refrigerant leaks or damage to the heat exchanger. See "Brazing Procedures," p. 43.

1. Install the TEV(s) directly to the unit liquid connection. See TEV recommendations in the Tube Size and Component Selection Application Guide, publication number SS-APG012-EN.

NOTICE:

Evaporator Damage!

To prevent evaporator damage and for proper refrigerant distribution, an 8-12" stub tube must be brazed between the expansion valve and the chiller entering refrigerant connection. This tube must be the same diameter as the heat exchanger connection ID. Use reducers only at the expansion valve. See Figure 19, p. 25 through Figure 23, p. 29 for Chiller inlet dimensions.

2. Locate TEV bulb on top of the suction line 12" from the heat exchanger outlet.
3. Secure the bulb to the suction line with two clamps provided by the manufacturer and insulate the bulb.
4. Locate liquid line solenoid valve(s) near TEV.
5. Install the Frostat™ according to instructions enclosed in the kit as close to the evaporator as possible.

Figure 30. EVP Chiller, Typical Refrigerant Piping (2 circuit system)

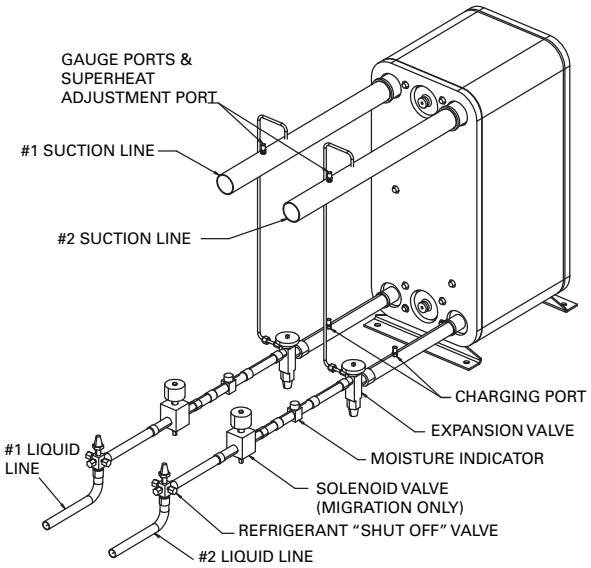

Hot Gas Bypass for Commercial Comfort-Cooling Applications

Hot gas bypass is not recommended for use on RAUJ units. Frostat™ is the preferred method of protecting the evaporator from freeze-up. It turns off compressors when

the coil frosting is sensed. The compressor is allowed to operate when the coil temperature rises a few degrees above the frosting condition. This action reduces the overall energy consumption of the system while reliably maintaining system control.

For more information, refer to the Hot Gas Bypass Engineers Newsletter, ADM-APN007-EN.

Optional Pressure Gauges

When a unit is ordered with optional pressure gauges, ("F" in the miscellaneous digit of the model number), a set of gauges and the necessary mounting hardware ship in the location illustrated in the Unit Component "Layout" and "Shipwith" Location. The mounting location and tubing configuration for the optional pressure gauges after field installation is shown below.

1. Assemble the valve depressor, flare nuts, 1/4" copper tubing, 90 degree flare elbows, gauge & gauge bracket together as shown in Detail "A" & "B".

Note: *Wrap all appropriate pipe threads with Teflon tape before assembly.*

2. Remove the valve stem cap and place the valve depressor (with tubing connected) onto the valve stem and tighten.

Note: *Do not install the valve depressor without the tubing being connected. If gauges need to be replaced, remove valve depressor from valve stem, first, to prevent loss of refrigerant charge.*

3. Using the gauge bracket as a template for the self tapping screws, mount the gauge bracket approximately 1/2" to 3/4" from the outer edge of the base rail, relative to the compressors for that circuit, as illustrated.
4. Apply 6" strips of edge protector to both side flanges of the gauge bracket, to prevent the bracket from cutting into the power wires.

Figure 31. Pressure gauges 20 - 60 Ton units: plan view

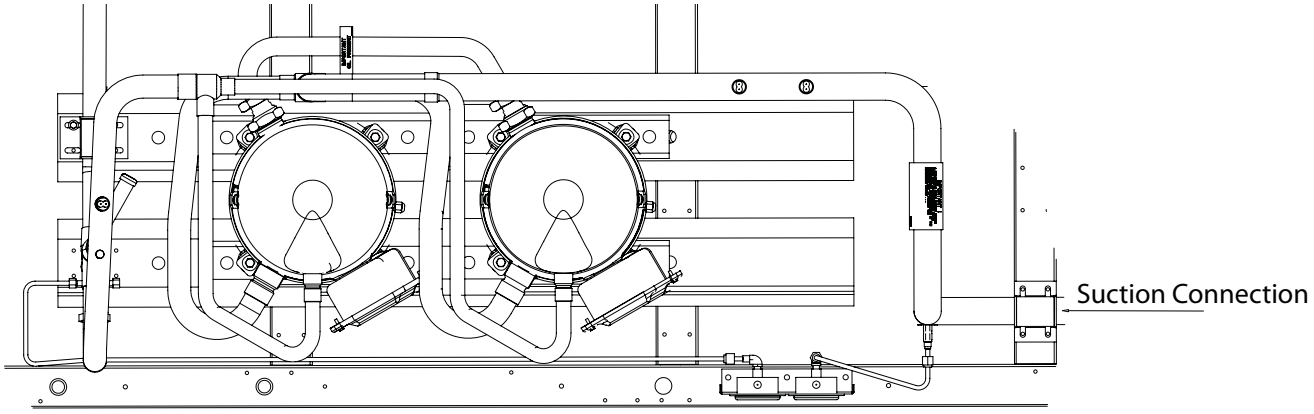

Figure 32. Pressure gauges 20 - 60 Ton units: front view

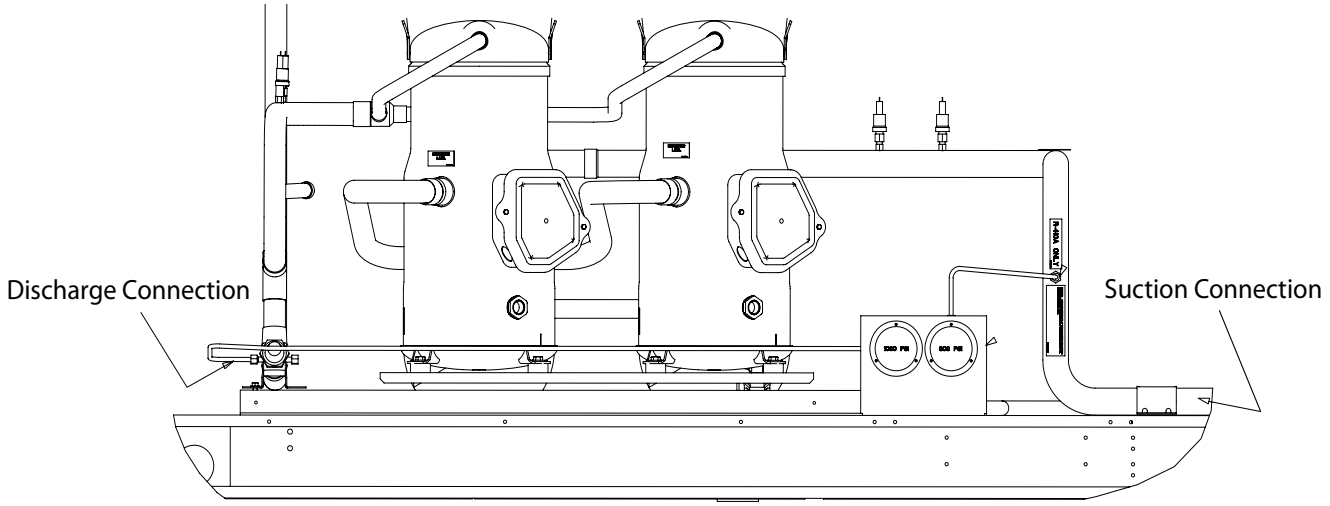

Figure 33. Pressure gauges 80 - 120 Ton units: front view

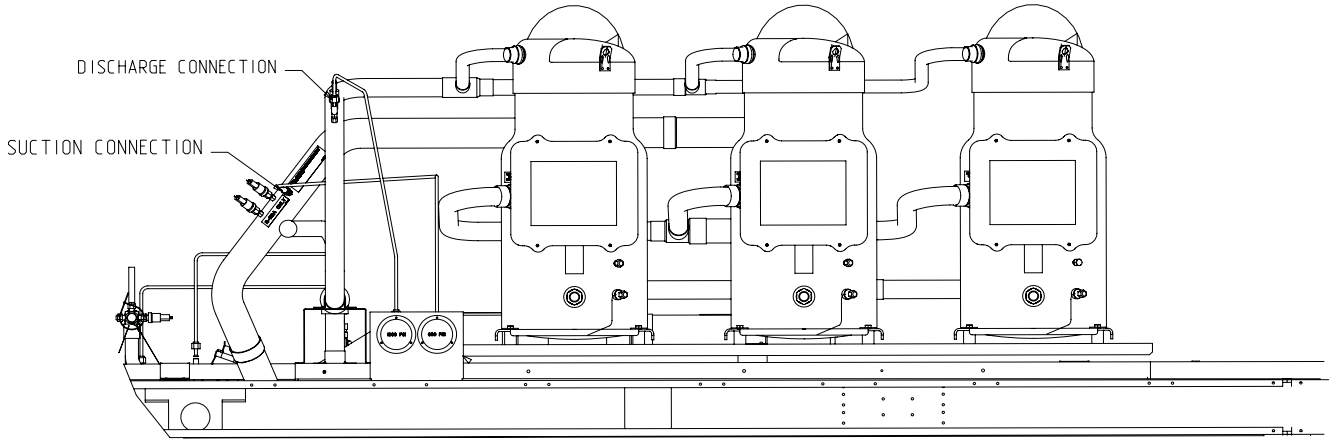

Final Refrigerant Pipe Connections

To access the refrigerant pipe connections, remove the louvered side grills.

These condensing units are shipped with a Nitrogen holding charge. Install pressure gauges to the appropriate access valve(s) and take a reading. If no pressure is present, refer to the "Leak Testing Procedure" section. If pressure is present, relieve the pressure before attempting to unsweat the "seal" caps. If refrigerant connections are not capped, but are "spun-end" tubes, use a tubing cutter to remove the end from the pipe.

Note: *To prevent damage to the system, do not drill a hole in the seal caps or saw the ends off pipe stubs. This could introduce copper chips into the system piping.*

Brazing Procedures

⚠WARNING

Hazard of Explosion and Deadly Gases!

Never solder, braze or weld on refrigerant lines or any unit components that are above atmospheric pressure or where refrigerant may be present. Always remove refrigerant by following the guidelines established by the EPA Federal Clean Air Act or other state or local codes as appropriate. After refrigerant removal, use dry nitrogen to bring system back to atmospheric pressure before opening system for repairs. Mixtures of refrigerants and air under pressure may become combustible in the presence of an ignition source leading to an explosion. Excessive heat from soldering, brazing or welding with refrigerant vapors present can form highly toxic gases and extremely corrosive acids. Failure to follow all proper safe refrigerant handling practices could result in death or serious injury.

⚠WARNING

Hazard of Explosion!

Use only dry nitrogen with a pressure regulator for pressurizing unit. Do not use acetylene, oxygen or compressed air or mixtures containing them for pressure testing. Do not use mixtures of a hydrogen containing refrigerant and air above atmospheric pressure for pressure testing as they may become flammable and could result in an explosion. Refrigerant, when used as a trace gas should only be mixed with dry nitrogen for pressurizing units. Failure to follow these recommendations could result in death or serious injury or equipment or property-only damage.

Proper brazing techniques are essential when installing refrigerant piping. The following factors should be kept in mind when forming sweat connections.

1. When copper is heated in the presence of air, Copper oxide forms. To prevent copper oxide from forming inside the tubing during brazing, sweep an inert gas, such as dry nitrogen, through the tubing. Nitrogen displaces air in the tubing and prevents oxidation of the interior surfaces. A nitrogen flow of one to three cubic feet per minute is sufficient to displace the air. Use a pressure regulating valve or flow meter to control the flow.
2. Ensure that the tubing surfaces to be brazed are clean, and that the ends of the tubes have been carefully reamed to remove any burrs.
3. Make sure the inner and outer tubes of the joint are symmetrical and have a close clearance, providing an easy slip fit. If the joint is too loose, the tensile strength of the connection will be significantly reduced. The overlap distance should be equal to the diameter of the inner tube.
4. Wrap the body of each refrigerant line component with a wet cloth to keep it cool during brazing. Move any tube entrance grommets away for the brazing area.

Note: *Use 40 to 45% silver brazing alloy (BAg-7 or BAg-28) on dissimilar metals. Use BCup-6 brazing alloy on copper to copper joints.*

5. If flux is used, apply it sparingly to the joint. Excessive flux can enter the system which will contaminate the refrigerant system.
6. Apply heat evenly over the length and circumference of the joint to draw the brazing material into the joint by capillary action. Remove the brazing rod and flame from the joint as soon as a complete fillet is formed to avoid possible restriction in the line.
7. Visually inspect the connection after brazing to locate any pin holes or crevices in the joint. The use of a mirror may be required, depending on the joint location.

Leak Testing Procedure

⚠WARNING

Hazard of Explosion!

Use only dry nitrogen with a pressure regulator for pressurizing unit. Do not use acetylene, oxygen or compressed air or mixtures containing them for pressure testing. Do not use mixtures of a hydrogen containing refrigerant and air above atmospheric pressure for pressure testing as they may become flammable and could result in an explosion. Refrigerant, when used as a trace gas should only be mixed with dry nitrogen for pressurizing units. Failure to follow these recommendations could result in death or serious injury or equipment or property-only damage.

⚠WARNING

Hazard of Explosion!

Never use an open flame to detect gas leaks. It could result in an explosion. Use a leak test solution for leak testing. Failure to follow recommended safe leak test procedures could result in death or serious injury or equipment or property-only-damage.

When Leak-testing a refrigerant system, observe all safety precautions.

Trane condensing units are shipped with a Nitrogen holding charge. If there is no pressure, the unit must be leak tested to determine the location of leak as follows:

Note: *These service procedures require working with refrigerant, Do NOT release refrigerant to the atmosphere! The service technician must comply with all federal, state, and local laws.*

Use refrigerant gas as a tracer for leak detection and use oil-pumped dry nitrogen to develop the required test pressure. Test the high and low side of the system at pressures dictated by local codes.

1. Close the field supplied liquid line service valve(s) installed near the evaporator and the compressor discharge service valve to isolate the system's high side from the low side. Pressure test the liquid line, discharge line, and condenser coils at pressures dictated by local codes. Do not exceed 10# above the pressure control settings.
2. Connect a refrigerant cylinder to the charging port of the liquid line service valve. Use the refrigerant to raise the high side pressure to 12 to 15 psig.
3. Disconnect the refrigerant cylinder. Connect a dry nitrogen cylinder to the charging port and increase the high side pressure. Do not exceed the condenser maximum working pressure listed on the unit nameplate.
4. Use a leak detector or soap bubbles to check for leaks. Check all piping joints, valves, etc...
5. If a leak is located, use proper procedures to remove the refrigerant/nitrogen mixture, break the connection and remake as a new joint. Retest for leaks after making repairs.
6. Repeat the test procedure for the low side of the system, charging through the suction pressure gauge port or through an access provided on the suction line by the installer. Increase the system pressure to 100 psig.
7. If a leak is located, use proper procedures to remove the refrigerant/nitrogen mixture, break the connection and remake as a new joint. Retest for leaks after making repairs.
8. Open the liquid line service valve and the compressor discharge service valve.

Remote EVP Chiller

Water Treatment

NOTICE:

Proper Water Treatment!

The use of untreated or improperly treated could result in scaling, erosion, corrosion, algae or slime. It is recommended that the services of a qualified water treatment specialist be engaged to determine what water treatment, if any, is required. Trane assumes no responsibility for equipment failures which result from untreated or improperly treated water, or saline or brackish water.

NOTICE:

Heat Exchanger Damage!

The use of untreated or improperly treated water could result in heat exchanger fouling and permanent damage to the heat exchanger.

The use of untreated or improperly treated water could result in scaling, erosion, corrosion, and algae or slime buildup in the heat exchanger. This will adversely affect

system capacity. Proper water treatment must be determined locally and depends on the type of system and local water characteristics. Neither salt nor brackish water is recommend, use of either will lead to a shortened heat exchanger life. Trane encourages employment of a qualified water treatment specialist, familiar with local water conditions, to assist in the establishment of a proper water treatment program.

Water Flow Limits

NOTICE:

Heat Exchanger Damage!

Water flow rates beyond the heat exchanger limits could result in permanent damage to the heat exchanger.

The minimum and maximum water flow rates are given in the General Data section. Water flow rates below the tabulated values will result in laminar flow causing freeze-up problems, scaling, stratification and poor system control. Flow rates exceeding the maximum listed could result in very high pressure drop, erosion of the heat exchanger and damage to the water flow switch.

Water Temperature Limits

NOTICE:

Heat Exchanger and Compressor Damage!

Leaving water temperatures below 42°F require glycol protection down to 15°F. Otherwise, water freezing in brazed plate chiller could rupture separation between refrigerant and water flow channels necessitating heat exchanger/compressor replacement and system cleanup.

NOTICE:

Heat Exchanger Damage!

The brazed plate heat exchanger could be damaged by excessive refrigerant pressures if circulating water temperatures exceed 125°F when the unit is not operating..

Catalog chiller performance data is based on a water temperature drop of 10°F . Full load chilled water temperature drops from 8 to 14°F may be used as long as minimum and maximum water temperature and minimum and maximum flow rates are not violated. Leaving water temperatures below 42°F require freeze protection down to 15°F. The maximum water temperature that can be circulated through the chiller when the unit is not operating is 125°F. Evaporator damage could result above this temperature.

Short Water Loops

NOTICE:

Compressor Damage!

Water loops with less than five minute circulation time could result in poor superheat control and compressor damage.

Adequate chilled water system water volume is an important system design parameter because it provides for stable chilled water temperature control and helps limit unacceptable short cycling of chiller compressors. Typically, a five-minute water loop circulation time is sufficient to prevent short water loop issues. Therefore, as a guideline, ensure the volume of water in the chilled water loop equals or exceeds five times the evaporator flow rate. For systems with a rapidly changing load profile the amount of volume should be increased.

Note: *Water volumes should be calculated as close as possible to maintain constant water flow through the water loop.*

Chilled Water Piping

Typical Water Piping. Figure 36, p. 48 illustrates typical water piping components for remote chiller applications. (Remote Chiller accessory kit includes strainer, water flow switch, pipe stubs, couplings, evaporator insulation and mounting legs, and a ship separate braze plate heat exchanger.)

Foreign matter in the chilled water system will increase pressure drop and reduce water flow. Installation of a properly selected strainer is also necessary to prevent debris larger than 0.039” from entering the heat exchanger. All building piping must be thoroughly flushed before making the final piping connections to the heat exchanger. The strainer must also be cleaned prior to initial start-up.

Important: *Start up without flushing building piping risks plugging chiller with debris and reducing capacity.*

To reduce heat loss and prevent condensation, insulation should be applied to piping. Expansion tanks are also usually required to accommodate chilled water volume changes.

Braze Plate (BPHE) Chiller. Evaporator water inlet and outlet types, sizes and locations are shown in Figure 19, p. 25 to Figure 23, p. 29. Installation of a field provided 1/2” x 14NPTE stainless steel or PVC plug is required.

Strainer. Install a strainer in the water supply line to protect the chiller from plugging with system piping debris. Strainers should be installed as close as practical to the heat exchanger water inlet (the remote chiller accessory kit includes strainer and piping to connect with

BPHE). A field provided blow down valve (recommended) or plug must be installed in strainer cleanout if not present.

Table 11. Chiller water pressure drop, Ft H2O

Flow	Size, Tons								
GPM	**20**	**25**	**30**	**40**	**50**	**60**	**80**	**100**	**120**
25	3.7								
30	5.2	3.2							
35	6.9	4.2							
40	8.8	5.4	3.1						
45	10.9	6.7	3.9						
50	13.3	8.2	4.8	5.3					
60	18.5	11.4	6.7	7.5	4.1				
70	24.6	15.2	8.9	10.1	5.5				
80		19.4	11.4	13.0	7.1	5.0			
90		24.1	14.2	16.3	8.9	6.3			
100			17.3	19.9	10.9	7.7	4.3		
120				28.3	15.4	10.9	6.1	3.2	
140					20.7	14.6	8.2	4.4	
160					26.7	18.9	10.6	5.6	4.8
180						23.6	13.2	7.1	6.1
200							16.2	8.7	7.4
240							22.9	12.3	10.6
280								16.5	14.2
320								21.3	18.3
360								26.7	23.0
400									28.2

Chiller Water Flow Switch.

NOTICE:

Evaporator Damage!

To prevent evaporator damage, do not use water flow switch to cycle the system.

NOTICE:

Evaporator Damage!

Operation at water flow rates below the minimum limits could result in permanent damage to the heat exchanger and compressors.

Install a flow switch or other flow sensing device, illustrated in Figure 34, to prevent or stop the compressor operation if the water flow drops below minimum limits. Locate the device in the chilled water return line as shown in Figure 36, p. 48. Install per switch manufacturer's instructions and refer to the field wiring and unit schematics for the flow switch electrical interlock connections. Adjust switch trip point to prevent operation below minimum limits.

The water flow switch included in the EVP chiller accessory kit must be adjusted to prevent flow below the minimum limit. To set the flow limit:

1. Establish minimum water flow.
2. Rotate the flow switch adjustment screw until the switch opens. This gets close to the correct setting but final adjustment must be done without water flow.
3. Beginning from water off, start flow and adjust GPM until the switch trips. If flow rate is below minimum, stop water flow and rotate adjusting screw accordingly.
4. Repeat until the switch trips at or above minimum flow.

Note: *Use pressure gauge(s) and Water Pressure Drop table to determine water flow rate. See General Data for minimum flow limits.*

Figure 34. Optional flow switch

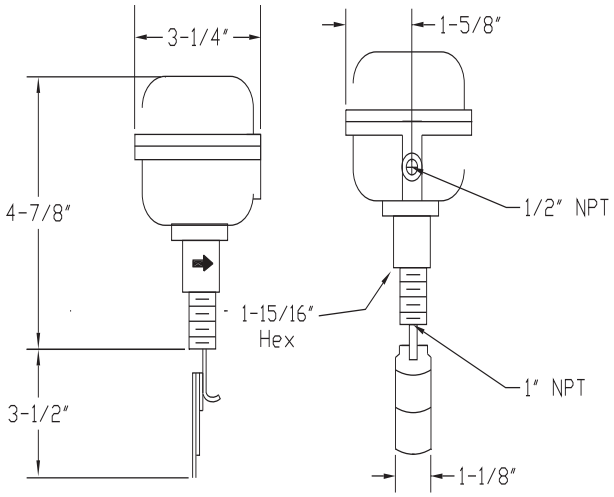

Figure 35. Freezestat Bulb-well, Temperature Sensor and Well

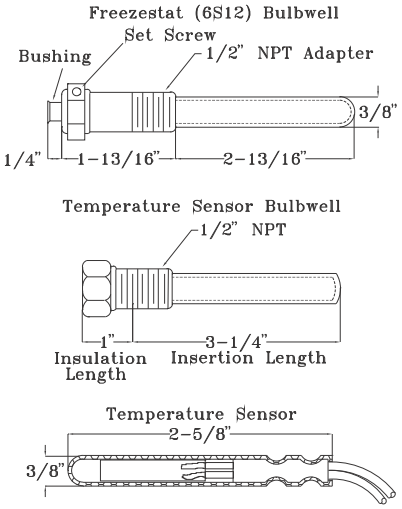

Air Vents. Vents must be installed at high points in the piping system to facilitate air purging during the filling process. Air vents between the system shut off valve and

heat exchanger are also useful for EVP chiller service and shutdown.

Water Pressure Gauges.

NOTICE:

Evaporator Damage!

To prevent evaporator damage do not exceed 150 psig evaporator pressure.

Install pressure gauge(s) to monitor the entering and leaving chilled water pressure, and strainer condition.

Water Shutoff Valves. Provide shutoff valves in the "Supply" and "Return" pipe near the chiller so the gauge(s), thermostats, sensors, strainer, etc., can be isolated during service.

Pipe Unions. Use pipe unions to simplify disassembly for system service. Use vibration eliminators to prevent transmitting vibrations through the water lines.

Thermometers. Install thermometers in the lines to monitor the evaporator entering and leaving water temperatures.

Balancing Valves. Install a balancing cock (valve) in the leaving water line. It will be used to establish a balanced flow.

Note: *Both the entering and leaving water lines should have shutoff valves installed to isolate the evaporator for service.*

Chiller Drain. Drain piping, with shut off valve, must be installed at the lowest point between the chiller and system piping valves to allow water removal for service and shut down procedures. The drain must be piped to a suitable facility.

Note: *Insure that the drain is closed before filling system with water.*

Water Temperature Sensor. The Temperature Sensor and Sensor-well must be installed in the leaving water piping as close to the chiller as possible. Both devices are located inside the remote panel. Thermal paste is also provided inside the remote panel and must be used when installing the sensor into the sensor-well. Figure 35, p. 46 illustrates the Sensor-well dimensions.

NOTICE:

Equipment Damage!

Failure to use thermal paste could result in erratic temperature sensing resulting in equipment damage.

Freezestat. A Bulb-well (located inside the remote panel) must be installed in the leaving water piping as close to the chiller as possible. It should be located upstream of the Temperature Sensor location. The Freezestat, located within the remote panel, is equipped with a remote Sensing Bulb and 20 feet of capillary tube. The Remote Sensing Bulb must be installed by the installing personnel. Thermal paste is also provided inside the remote panel and must be used when installing the bulb into the bulb-well. Figure 35, p. 46 illustrates the Bulb-well dimensions.

Important: *Isolate the water pumps from the system piping to avoid vibration transmission. Insulate all water piping. Use appropriate pipe sealant on all threaded connections.*

Final Water Piping Connections

1. All water piping in the system must be flushed thoroughly before making the final connections.

NOTICE:

Equipment Damage!

If an acidic commercial flushing solution is used, bypass the EVP chiller to prevent damage to the heat exchanger.

2. Clean strainer.
3. Connect the water pipe to the EVP chiller.
4. Make sure the 1/2” x 14NPTE plug is installed.
5. Close the drain shutoff valve.
6. While filling the chiller system with solution, vent the air from the system at the highest points.

Figure 36. EVP Chiller, Typical Water Piping

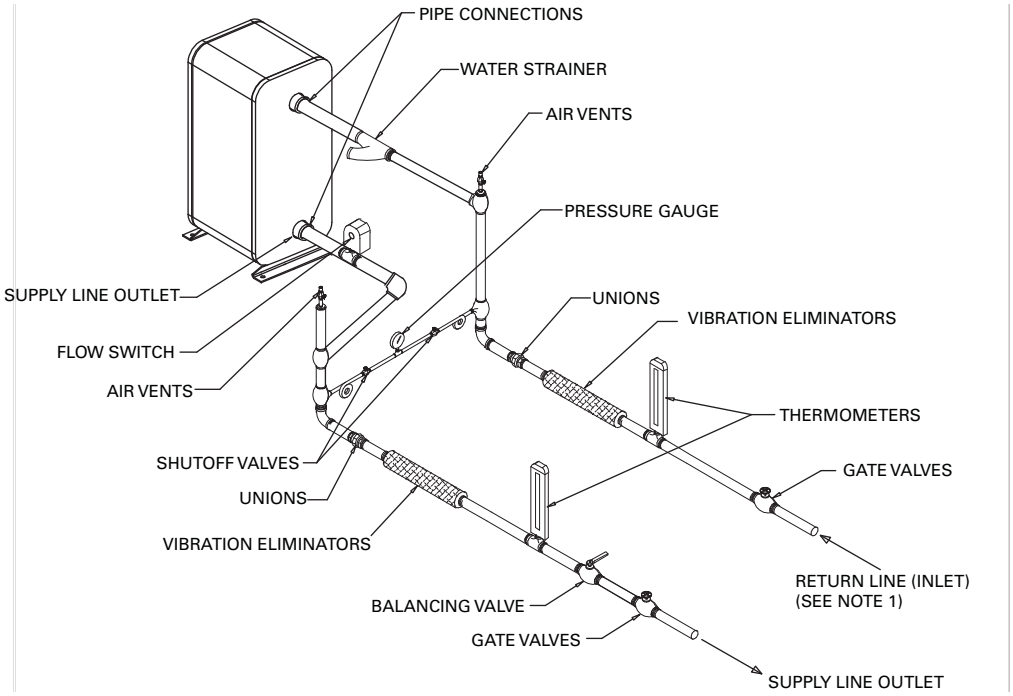

Notes:
1. Shutoff valves are required for evaporator servicing.
2. Evaporator is shown for illustration purposes only.
3. Water inlet, outlet diameter dimensional locations depend on unit size.
4. Water connections at the evaporator are grooved.
5. Field supplied 1/2" x 14 NPTE stainless steel or PVC plug required.
6. Locate freezestat and discharge temperature sensors close to the water outlet.
7. Install drain with shutoff valve at low point in leaving piping before system valve.

Field Installed Power Wiring

NOTICE:

Use Copper Conductors Only!

Unit terminals are not designed to accept other types of conductors. Failure to use copper conductors could result in equipment damage.

An overall dimensional layout for the field installed wiring entrance into the unit is illustrated in Figure 5, p. 11 to Figure 18, p. 24. To insure that the unit's supply power wiring is properly sized and installed, follow the guidelines outlined below.

Verify that the power supply available is compatible with the unit's nameplate ratings. The available supply power must be within 10% of the rated voltage stamped on the nameplate.

Disconnect Switch External Handle (20-120 Ton Factory Mounted Option)

Units ordered with the factory mounted nonfused disconnect switch comes equipped with an externally mounted handle. This allows the operator to disconnect power from the unit without having to open the control panel door. Handle locations and its three positions are shown below;

"ON" - Indicates disconnect switch is closed, allowing main power supply to be applied at unit.

"OFF" - Indicates disconnect switch is open, interrupting main power supply to unit controls.

"OPEN COVER/RESET" - Turning the handle to this position releases the handle form the disconnect switch, allowing the control panel door to be opened.

Once the door has been opened, it can be closed with the handle in any one of the three positions outlined above, provided it matches the disconnect switch position.

The handle can be locked in the "OFF" position. While holding the handle in the "OFF" position, push the spring loaded thumb key, attached to the handle, into the base slot. Place the lock shackle between the handle and the thumb key. This will prevent it from springing out of position.

Main Unit Power Wiring

⚠WARNING

Hazardous Voltage!

Disconnect all electric power, including remote disconnects before servicing. Follow proper lockout/tagout procedures to ensure the power cannot be inadvertently energized. Failure to disconnect power before servicing could result in death or serious injury.

⚠WARNING

Proper Field Wiring and Grounding Required!

All field wiring MUST be performed by qualified personnel. Improperly installed and grounded field wiring poses FIRE and ELECTROCUTION hazards. To avoid these hazards, you MUST follow requirements for field wiring installation and grounding as described in NEC and your local/state electrical codes. Failure to follow code could result in death or serious injury.

Figure 37. Disconnect switch details

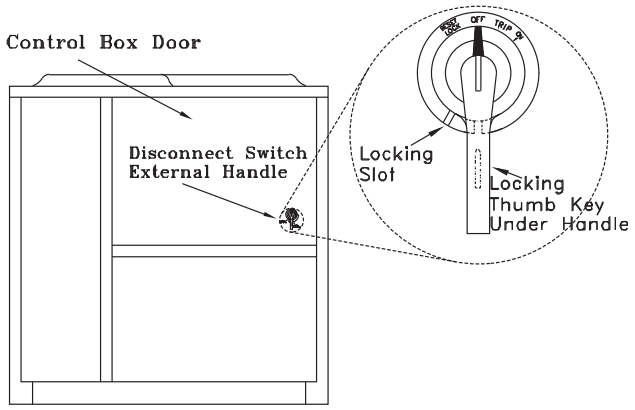

Table 12, p. 49 lists the field connection wire ranges for both the main power terminal block 1TB1 and the optional main power disconnect switch 1S1. The unit electrical data is listed in Table 14, p. 51 and Table 15, p. 52. The electrical service must be protected from over current and short circuit conditions in accordance with NEC requirements. Protection devices must be sized according to the electrical data on the nameplate. Refer to the "Power Wire Sizing & Protection Device Equations", for determining:

a. the appropriate electrical service wire size based on "Minimum Circuit Ampacity" (MCA),

b. the "Maximum Over current Protection" (MOP) device.

c. the "Recommended Dual Element fuse size" (RDE).

1. If the unit is not equipped with an optional factory installed non-fused disconnect switch, a field supplied disconnect switch must be installed at or near the unit in accordance with the National Electrical Code (NEC latest edition). Refer to the "Power Wire Sizing & Protection Device Equations" (DSS calculation), for determining the correct size.
2. Complete the unit's power wiring connections onto either the main terminal block 1TB1, or the factory mounted non-fused disconnect switch 1S1, inside the unit control panel. Refer to the customer connection diagram that shipped with the unit for specific termination points.
3. Provide proper grounding for the unit in accordance with local and national codes.

Power Wire Sizing and Protection Device Equations

Table 12. Customer connection wire range 20 - 60 Ton units

CUSTOMER WIRE SELECTION			
POWER WIRE SELECTION TO DISCONNECT SWITCH (1S1)			
UNIT SIZE	UNIT VOLTAGE	DISCONNECT SWITCH SIZE	CONNECTOR WIRE RANGE
20 - 40 TON	380/415/460/575 VOLT	100 AMP	(1) #14 - 1/0
50 TON	575 VOLT	100 AMP	(1) #14 - 1/0
20 - 40 TON	200/230 VOLT	250 AMP	(1) #4 - 350 kcmil
50 - 60 TON	380/415/460 VOLT	250 AMP	(1) #4 - 350 kcmil
60 TON	575 VOLT	250 AMP	(1) #4 - 350 kcmil
50 - 60 TON	200/230 VOLT	400 AMP	(1) #1 - 600 kcmil OR (2) #1 - 250 kcmil
POWER WIRE SELECTION TO MAIN TERMINAL BLOCK (1TB1)			
UNIT SIZE	UNIT VOLTAGE	TERMINAL BLOCK SIZE	CONNECTOR WIRE RANGE
20 - 60 TON	ALL VOLTAGES	335 AMP	(1) #6 - 350 MCM
CONTROL WIRE SELECTION TO CONTROL TERMINAL BLOCKS (7TB5 THRU 7TB8 6TB9)			
WIRE GAUGE	OHMS PER 1000 FEET	MAX WIRE LENGTH	
18 AWG	8	500 FT	
16 AWG	5	1000 FT	
14 AWG	3	2000 FT	

Table 13. Customer connection wire range 80 - 120 Ton units

CUSTOMER WIRE SELECTION		
POWER WIRE SELECTION TO MAIN TERMINAL BLOCK (1TB1)		
UNIT VOLTAGE	TERMINAL BLOCK SIZE	CONNECTOR WIRE RANGE
ALL VOLTAGES	760 AMP	(2) #4 - 500 MCM
CONTROL WIRE SELECTION TO CONTROL TERMINAL BLOCKS (7TB5 - 7TB8) "SEE NOTE 6"		
WIRE GAUGE	OHMS PER 1000 FEET	MAX WIRE LGTH
18	8	500 FT
16	5	1000 FT
14	3	2000 FT
12	2	3000 FT

To correctly size the main power wiring for the unit, use the appropriate calculation(s) listed below. Read the load definitions that follow and use Calculation #1 for determining the MCA (Minimum Circuit Ampacity), MOP (Maximum Over current Protection), and RDE (Recommended Dual Element fuse size) for each unit. Use Calculation #2 to determine the DSS (Disconnect Switch Size) for each unit.

Load Definitions:

LOAD 1 = CURRENT OF THE LARGEST MOTOR (COMPRESSOR OR FAN MOTOR)

LOAD 2 = SUM OF THE CURRENTS OF ALL REMAINING MOTORS

LOAD 4 = CONTROL POWER TRANSFORMER

= AND ANY OTHER LOAD RATED AT 1 AMP OR MORE

Calculation #1 (MCA, MOP, and RDE)

MCA = (1.25 x LOAD 1) + LOAD 2 + LOAD 4 **MOP** = (2.25 x LOAD 1) + LOAD 2 + LOAD 4

Select a fuse rating equal to the MOP value. If the MOP value does not equal a standard fuse size as listed in NEC 240 - 6, select the next lower standard fuse rating.

Note: *If selected MOP is less than the MCA, then select the lowest standard maximum fuse size which is equal to or larger than the MCA, provided the selected fuse size does not exceed 800 amps.*

RDE = (1.5 x LOAD 1) + LOAD 2 + LOAD 4

Select a fuse rating equal to the RDE value. If the RDE value does not equal a standard fuse size as listed in NEC 240 - 6 select the next higher standard fuse rating.

Note: *If the selected RDE is greater than the selected MOP value, then select the RDE value to equal the MOP value.*

Calculation #2 Disconnect Switch Sizing (DSS)

DSS = 1.15 X (LOAD 1 + LOAD 2 + LOAD 4)

Table 14. Electrical service sizing data (20-60 Ton units)

		Unit Characteristics				Condenser Fan Motor					Compressor Motor				
Model	Electrical Characteristics	Allowable Voltage Range	Min. Circuit Amp	Max. Overcurrent Protection	Rec. Dual Element Fuse Size	KW	NO	HP	FLA	LRA	NO	1A/ 2A RLA	1B/2B RLA	1A/2A LRA	1B/2B LRA
20 Ton	200/60/3XL	180-220	102	125	125	0.9	2	1	4.1	20.7	2	41.4	41.4	267	267
	230/60/3XL	208-254	89	110	100	0.9	2	1	4.1	20.7	2	35.5	35.5	267	267
	460/60/3XL	416-508	46	60	60	0.9	2	1	1.8	9.0	2	18.6	18.6	142	142
	575/60/3XL	520-635	39	50	45	0.9	2	1	1.4	7.2	2	15.8	15.8	103	103
	380/415/50/3XL	342-418 373-456	46	60	50	0.75	2	1	1.7	9.2	2	18.6	18.6	142	142
25 Ton	200/60/3XL	180-220	119	150	150	0.9	3	1	4.1	20.7	2	41.4	52	267	315
	230/60/3XL	208-254	107	150	125	0.9	3	1	4.1	20.7	2	35.5	47	267	315
	460/60/3XL	416-508	52	70	60	0.9	3	1	1.8	9.0	2	18.6	22.2	142	158
	575/60/3XL	520-635	44	60	50	0.9	3	1	1.4	7.2	2	15.8	19.2	103	136
	380/415/50/3XL	342-418 373-456	52	70	60	0.75	3	1	1.7	9.2	2	18.6	22.2	142	158
30 Ton	200/60/3XL	180-220	141	175	175	0.9	3	1	4.1	20.7	2	56.9	56.9	351	351
	230/60/3XL	208-254	123	150	150	0.9	3	1	4.1	20.7	2	48.8	48.8	351	351
	460/60/3XL	416-508	63	80	70	0.9	3	1	1.8	9.0	2	25.5	25.5	197	197
	575/60/3XL	520-635	57	70	70	0.9	3	1	1.4	7.2	2	23.1	23.1	146	146
	380/415/50/3XL	342-418 373-456	63	80	70	0.75	3	1	1.7	9.2	2	25.5	25.5	197	197
40 Ton	200/60/3XL	180-220	193	225	225	0.9	6	1	4.1	20.7	4	41.4	41.4	267	267
	230/60/3XL	208-254	168	200	200	0.9	6	1	4.1	20.7	4	35.5	35.5	267	267
	460/60/3XL	416-508	87	100	100	0.9	6	1	1.8	9.0	4	18.6	18.6	142	142
	575/60/3XL	520-635	73	80	80	0.9	6	1	1.4	7.2	4	15.8	15.8	103	103
	380/415/50/3XL	342-418 373-456	86	100	100	0.75	6	1	1.7	9.2	4	18.6	18.6	142	142
50 Ton	200/60/3XL	180-220	236	250	250	0.9	6	1	4.1	20.7	4	47	52	304	315
	230/60/3XL	208-254	215	250	250	0.9	6	1	4.1	20.7	4	42.3	47	304	315
	460/60/3XL	416-508	102	110	110	0.9	6	1	1.8	9.0	4	20.2	22.2	147	158
	575/60/3XL	520-635	86	100	100	0.9	6	1	1.4	7.2	4	17.1	19.2	122	136
	380/415/50/3XL	342-418 373-456	101	110	110	0.75	6	1	1.7	9.2	4	20.2	22.2	147	158
60 Ton	200/60/3XL	180-220	267	300	300	0.9	6	1	4.1	20.7	4	56.9	56.9	351	351
	230/60/3XL	208-254	232	250	250	0.9	6	1	4.1	20.7	4	48.8	48.8	351	351
	460/60/3XL	416-508	120	125	150	0.9	6	1	1.8	9.0	4	25.5	25.5	197	197
	575/60/3XL	520-635	107	125	125	0.9	6	1	1.4	7.2	4	20.3	20.3	146	146
	380/415/50/3XL	342-418 373-456	119	125	125	0.75	6	1	1.7	9.2	4	25.4	25.4	197	197

Notes:

1. LOAD 1= Current of the largest motor (Compressor or Fan Motor); LOAD 2=Sum of the currents of all remaining motors. LOAD 3= FLA(Full Load Amps) of the electric heater; LOAD 4= Any other load rated at 1 amp or more.
2. For Electric Heat MCA, MOP, RDE values, calculate for both cooling and heating modes.
3. If selected Max Over Cur is less than the Minimum Circuit Ampacity, then select the lowest maximum fuse size which is equal to or larger than the Min Circuit Ampacity, provided the selected fuse size does not exceed 800 amps.

Table 15. Electrical service sizing data (80-120 Ton units)

		Unit Characteristics				Condenser Fan Motor					Compressor Motor						
Model	Electrical Characteristics	Allowable Voltage Range	Min. Circuit Amp	Max. Overcurrent Protection	Rec. Dual Element Fuse Size	KW	NO	HP	FLA	LRA	NO	1A/ 2A RLA	1B/ 2B RLA	1C/ 2C RLA	1A/ 2A LRA	1B/ 2B LRA	1C/ 2C LRA
80 Ton	200/60/3XL	200/60/3XL	411	450	450	0.9	8	1	4.1	20.7	6	60.5	60.5	60.5	320	320	320
	230/60/3XL	230/60/3XL	358	400	400	0.9	8	1	4.1	20.7	6	52	52	52	320	320	320
	460/60/3XL	460/60/3XL	174	200	175	0.9	8	1	1.8	9	6	25.4	25.4	25.4	160	160	160
	575/60/3XL	575/60/3XL	139	150	150	0.9	8	1	1.4	7.2	6	20.3	20.3	20.3	135	135	135
100 Ton	200/60/3XL	200/60/3XL	480	500	500	0.9	12	1	4.1	20.7	6	60.5	60.5	83.9	320	320	485
	230/60/3XL	230/60/3XL	425	450	450	0.9	12	1	4.1	20.7	6	52	52	74.5	320	320	485
	460/60/3XL	460/60/3XL	207	225	225	0.9	12	1	1.8	9	6	25.4	25.4	37.2	160	160	215
	575/60/3XL	575/60/3XL	166	175	175	0.9	12	1	1.4	7.2	6	20.3	20.3	29.8	135	135	175
120 Ton	200/60/3XL	200/60/3XL	574	600	600	0.9	12	1	4.1	20.7	6	83.9	83.9	83.9	485	485	485
	230/60/3XL	230/60/3XL	515	600	600	0.9	12	1	4.1	20.7	6	74.5	74.5	74.5	485	485	485
	460/60/3XL	460/60/3XL	255	300	300	0.9	12	1	1.8	9	6	37.2	37.2	37.2	215	215	215
	575/60/3XL	575/60/3XL	204	225	225	0.9	12	1	1.4	7.2	6	29.8	29.8	29.8	175	175	175

Notes:
1. LOAD 1= Current of the largest motor (Compressor or Fan Motor); LOAD 2=Sum of the currents of all remaining motors. LOAD 3= FLA(Full Load Amps) of the electric heater; LOAD 4= Any other load rated at 1 amp or more.
2. For Electric Heat MCA, MOP, RDE values, calculate for both cooling and heating modes.
3. If selected Max Over Cur is less than the Minimum Circuit Ampacity, then select the lowest maximum fuse size which is equal to or larger than the Min Circuit Ampacity, provided the selected fuse size does not exceed 800 amps.

Field Installed Control Wiring

⚠WARNING

Hazardous Voltage!

Disconnect all electric power, including remote disconnects before servicing. Follow proper lockout/tagout procedures to ensure the power cannot be inadvertently energized. Failure to disconnect power before servicing could result in death or serious injury.

⚠WARNING

Proper Field Wiring and Grounding Required!

All field wiring MUST be performed by qualified personnel. Improperly installed and grounded field wiring poses FIRE and ELECTROCUTION hazards. To avoid these hazards, you MUST follow requirements for field wiring installation and grounding as described in NEC and your local/state electrical codes. Failure to follow code could result in death or serious injury.

Before installing any connecting wiring, refer to Figure 5, p. 11 to Figure 18, p. 24 for the electrical access locations provided on the unit. Install appropriately sized control wiring for the 115 volt electrical components as required by the application.

Since the unit-mounted 115V control power transformer (1T1) is provided on all units, it is not necessary to run a separate 115 volt control power source to the unit.

Note: *200/230 Volt units are shipped with transformer 1T1 wired for 200 volt operation. If the unit is to be operated on a 230 volt power supply, rewire the transformer as shown on the unit schematic.*

Controls Using 115 VAC

⚠WARNING

Hazardous Voltage!

Disconnect all electric power, including remote disconnects before servicing. Follow proper lockout/tagout procedures to ensure the power cannot be inadvertently energized. Failure to disconnect power before servicing could result in death or serious injury.

Install appropriately sized 115 volt control wiring for the electrical components as required by the application.

These components may include:

- Hot gas bypass solenoid wiring;
- Supply fan interlock and control circuit;
- System control switch wiring (“No Control” units);
- Step controller wiring (“No Control” units);
- Chilled water pump interlock wiring (EVP units);

- Chilled water flow switch wiring (EVP units);
- Outside air thermostat wiring (EVP units);
- Liquid line solenoid valve(s).

Supply Fan Interlock

Control options utilizing an Air Handler. The normally open evaporator fan interlock auxiliary contacts and the evaporator fan controls; system On/Off switch, fan starter/contactor, and overloads, must be wired as illustrated in the appropriate interlock connection wiring diagram for the specified application.

EVP Flow control (6S58). The flow switch is a binary output device and must be wired within the interlock circuit. Before installing the control wiring, refer to the remote panel illustration for the electrical access into the panel. Refer to the field connection diagram for the specific connection points inside the remote panel.

Provide a proper ground for all control circuitry at the ground connection screws provided within both the remote panel and the unit's control panel.

EVP Circulating Pump Interlock. Pump operation and sequence is the responsibility of the installer. During compressor operation, the fluid flow through the chiller must be maintained. The field provided; ON/OFF switch, pump starter/contactor, auxiliary contacts and overloads (OL's) must be installed as part of the system's interlock circuit to disable the compressors in the event the circulating pump shuts down or is turned off.

Note: *Due to the location of the 5S1 switch within the circulating pump control circuit, it can be used as a system ON/OFF switch.*

Outside Air Thermostat (5S57). A field provided outside air thermostat must be installed within the interlock circuit to prevent the system from operating below its workable temperature range. Before installing the control wiring, refer to the remote panel illustration for the electrical access into the panel. Refer to the field connection diagram for the specific connection points inside the remote panel. Refer to the "EVP Chiller Controls" section for temperature requirements.

Hot Gas Bypass (All control options). If hot gas bypass is required, refer to the "Refrigerant Piping" illustration for supporting equipment tubing connections. Refer to the specific control option field connection diagram terminal connections for the hot gas bypass solenoid coils.

Controls using 24 VAC

⚠WARNING

Hazardous Voltage!

Disconnect all electric power, including remote disconnects before servicing. Follow proper lockout/tagout procedures to ensure the power cannot be inadvertently energized. Failure to disconnect power before servicing could result in death or serious injury.

NOTICE:

Equipment Damage!

Resistance in excess of 3 ohms per conductor could cause component failure due to insufficient AC voltage supply.

Before installing any connecting wiring, refer to Figure 5, p. 11 to Figure 18, p. 24. for the electrical access locations provided on the unit and Table 16, p. 53 for AC conductor sizing guidelines, and;

1. Use copper conductors unless otherwise specified.
2. Ensure that the AC control wiring between the controls and the unit's termination point does not exceed three (3) ohms/conductor for the length of the run.
3. Be sure to check all loads and conductors for grounds, shorts, and miswiring.
4. Do not run the AC low voltage wiring in the same conduit with the high voltage power wiring.

Typical Low voltage components may include:

- zone thermostat wiring (AC & DC wiring);
- system control switch wiring (VAV units);
- night setback relay wiring (VAV units);
- economizer actuator circuit wiring (VAV units);
- discharge air sensor wiring (VAV units);
- jumpers for hot gas bypass operation;
- chilled water temperature sensor (EVP units).

Table 16. AC conductors

Distance from Unit to Control	Recommended Wire Size
000 - 460 feet	18 gauge
461 - 732 feet	16 gauge
733 - 1000 feet	14 gauge

Controls using DC Analog Input/Outputs

⚠WARNING

Hazardous Voltage!

Disconnect all electric power, including remote disconnects before servicing. Follow proper lockout/tagout procedures to ensure the power cannot be inadvertently energized. Failure to disconnect power before servicing could result in death or serious injury.

Before installing any connecting wiring between the unit and components utilizing a DC analog input/output signal, refer to Figure 5, p. 11 to Figure 18, p. 24 for the electrical access locations provided on the unit.

These components for *20 - 60 Ton* units may include:

- Field installed Discharge Duct Sensor (6RT1 CV units);
- Field installed Return Duct Sensor (6RT6 CV units);
- Field installed Discharge Air Sensor (6RT3 VAV units);
- Field installed Chilled Water Sensor (6RT2 EVP units);

These components for *80 - 120 Ton* units may include:

- Field installed Discharge Air Sensor (8RT3 VAV units);
- Field installed Chilled Water Sensor (8RT2 EVP units).

1. Wiring for the components utilizing a DC analog input/output signal must be shielded cable (Belden 8760 or equivalent). Ground the shield at one end only.
2. Table 17, p. 54 lists the conductor sizing guidelines that must be followed when interconnecting a DC binary output device to the unit.

Note: *Resistance in excess of 2.5 ohms per conductor can cause deviations in the accuracy of the controls.*

3. Ensure that the wiring between the binary controls and the unit's termination point does not exceed two and a half (2.5) ohms/conductor for the length of the run.
4. Do not run the electrical wires transporting DC signals in or around conduit housing high voltage wires.

Table 17. DC conductors

Distance from Unit to Control	Recommended Wire Size
000 - 499 feet	16 gauge
500 - 1000 feet	14 gauge

Economizer Actuator Circuit

Each unit ordered with the Constant Volume or Variable Air Volume control option has the capability of controlling a field installed economizer. The diagram below illustrates a typical economizer actuator circuit.

When connecting the economizer actuator control circuit to the terminal board inside the unit control panel, refer to the actual unit wiring diagram for terminal designation, i.e. W, B, R, & Y. A separate power supply for the actuator(s) must be field provided.

Figure 38. 20 - 60 Ton unit control panel

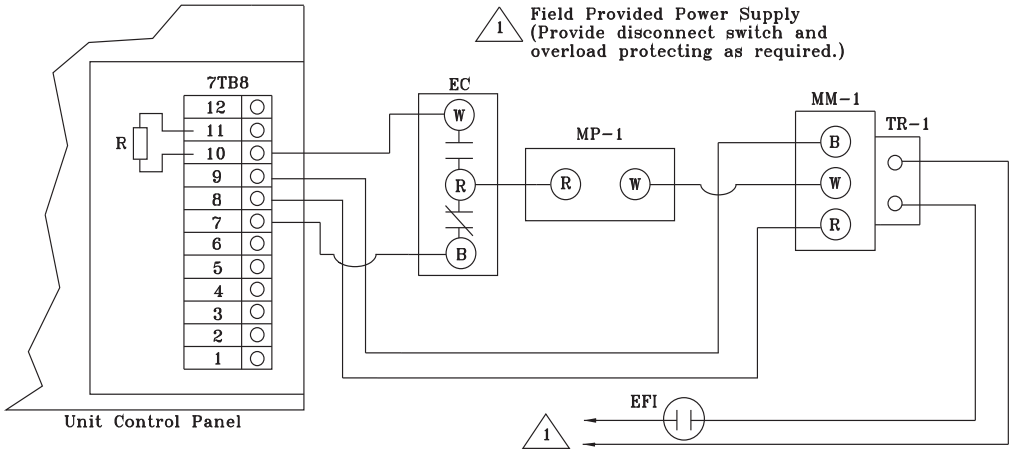

Table 18. 80 - 120 Ton unit control panel

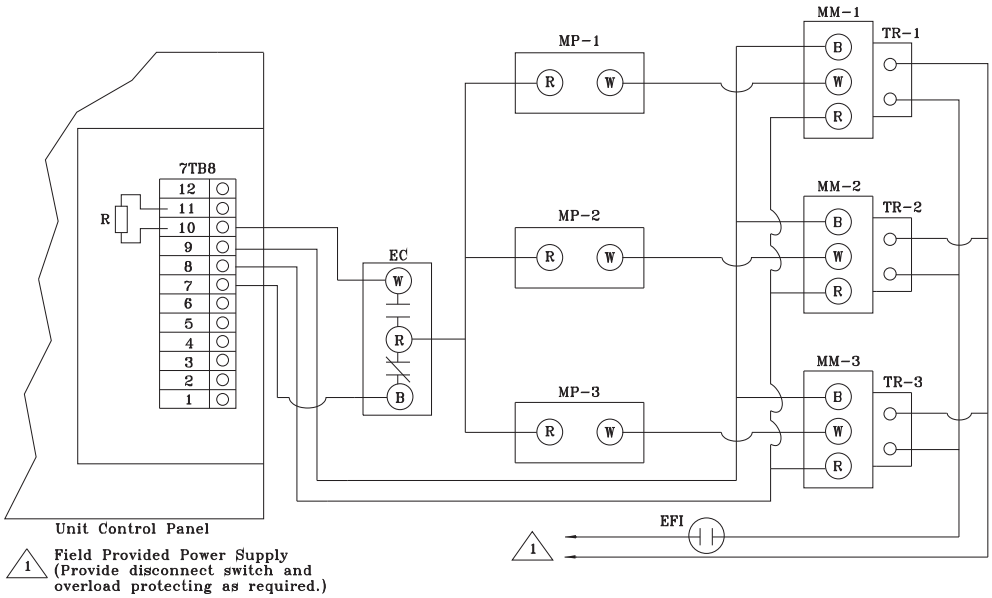

Table 19. Economizer actuator circuit legend

Device Designation	Device Designation	Parts And Notes
MM	Modutral Motor	M.H. M955, (Up to 3 motors may be controlled as shown. Additional motors must be slaved.)
TR	Transformer	M.H. 13081B; cover mounted
EC	Enthalpy Control	M.H. H2051046
MP	Minimum Position Potentiometer	M.H. S96A1012
EFI	Evaporator Fan Interlock	Field Provided
7TB88	Low Voltage Terminal Strip	Located in Temperature Controller Panel
R	1/4 Watt - 5% Carbon	1 Motor/Circuit = None Req. 2 Motors/ circuit = 1300 Ohms 3 Motors/Circuit = 910 Ohms

No System Control

Temperature Control Parameters

⚠WARNING

Hazardous Voltage!

Disconnect all electric power, including remote disconnects before servicing. Follow proper lockout/ tagout procedures to ensure the power cannot be inadvertently energized. Failure to disconnect power before servicing could result in death or serious injury.

Each unit ordered with the “No Controls” option, requires a field provided and field wired temperature controller. Single refrigerant circuit units require a 2-step control device, and dual refrigerant circuit units require a 4-step (20-60T units) or 6-step (80-120T units) control device.

Each unit is shipped from the factory with internal “Fixed-On” & “Fixed-Off” time delays wired into each step of cooling. The “Fixed-Off” timers are 5 minutes each and they begin timing when the circuit for that step of cooling is deactivated. The “Fixed-On” timers are 3 minutes each and they begin timing when the circuit for that step is activated.

Note: *Units ordered with the “No Controls” option cannot be used with EVP Chiller applications.*

Figure 39. Field connection diagram RAUJ20-60 - no system control

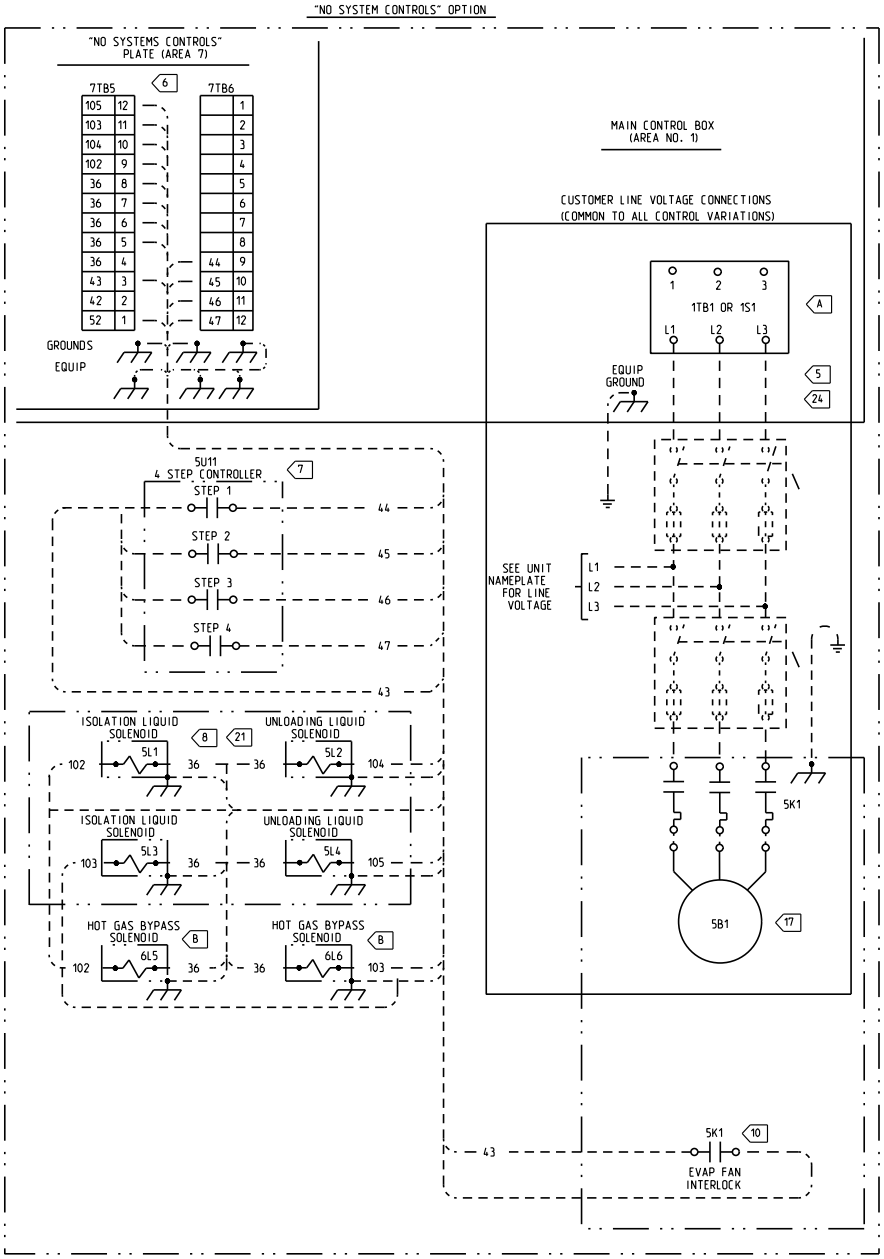

2307-9122

Figure 40. Field connection diagram notes - RAUJ 20-60 - all system controls

NOTE:

1. ALL WIRING AND COMPONENTS SHOWN DASHED TO BE SUPPLIED AND INSTALLED BY CUSTOMER IN ACCORDANCE WITH LOCAL AND NATIONAL ELECTRICAL CODES.
2. ALL WIRING TO BE N.E.C. CLASS 1 UNLESS OTHERWISE SPECIFIED.
3. CAUTION -- DO NOT ENERGIZE UNIT UNTIL CHECK-OUT AND START-UP PROCEDURES HAVE BEEN COMPLETED.
4. ALL THREE PHASE MOTORS ARE PROTECTED UNDER PRIMARY SINGLE PHASE FAILURE CONDITIONS.

5. SEE TABLE OF ACCEPTABLE WIRE SIZES FOR CONNECTION TO MAIN UNIT TERMINAL BLOCK (1TB1) OR DISCONNECT SWITCH (1S1).

6. SIZE CONTROL WIRING SUCH THAT TOTAL WIRE RESISTANCE OF THE RUN DOES NOT EXCEED 6 OHMS. SEE TABLE FOR WIRE SELECTION.

7. 4 STEP CONTROLLER (5U11) MIN. RATING - N.O. CONTACTS = 150 VA INRUSH/75 VA SEALED; N.C.CONTACTS = 80 VA INRUSH/40 VA SEALED.

8. ISOLATION LIQUID SOLENOID VALVES (5L1,5L3). UNLOADING LIQUID SOLENOID VALVES (5L2,5L4) AND HOT GAS BYPASS SOLENOID VALVES (6L5,6L6) -- MAX. SOLENOID RATINGS ARE 72 VA INRUSH/30 VA SEALED.

9. CIRCULATING PUMP CONTROL CIRCUIT MAX. RATINGS ARE 240 VA INRUSH/40 VA SEALED.

10. STARTER INTERLOCK (5K1). OUTSIDE AIR T-STAT (5S57). SYSTEM ON/OFF SWITCH (5S1). STARTER OVERLOAD RELAY (5K1 OL) AND FLOW SWITCH (6S58) MIN. RATINGS ARE 250 VA INRUSH/125 VA SEALED.

12. REMOVE RESISTOR (7R5 - 7TB8-4 & 5) WHEN FIELD SUPPLIED ECONOMIZER IS REQUIRED WITH OPTIONAL VARIABLE AIR VOLUME ("VAV") CONTROLS.

13. WIRING FOR DUCT SENSOR (6RT1). CHILLER TEMP SENSOR (6RT2). DISCHARGE AIR SENSOR (6RT3) AND RETURN AIR SENSOR (6RT6) MUST BE SHIELDED CABLE AND NOT RUN IN CONDUIT WITH OTHER WIRING. FOR RUNS UNDER 500 FEET USE 16 GA (MIN) WIRE. FOR RUNS FROM 500 TO 1000 FEET USE 14 GA (MIN) WIRE. MAXIMUM RUN IS 1000 FEET. GROUND SHIELD AT ONE END ONLY.

14. SUGGESTED SYSTEM CONTROL SWITCH (5S2) FOR "VAV" CONTROLS OPTION IS CUTLER HAMMER 7580K5 SPST TOGGLE SWITCH OR EQUIVALENT.

15. WHEN NIGHT SETBACK IS REQUIRED WITH OPTIONAL "VAV". PROVIDE A CONTACT CLOSURE SUITABLE FOR A DRY CIRCUIT WITH MIN. RATING OF 125 VA/24 VAC - PILOT DUTY. REMOVE JUMPER (7TB7-4 & 5) WHEN REQUIRED.

16. OUTSIDE AIR T-STAT (5S57) IS REQUIRED ONLY WITH "EVP" OPTION - FOR LOW AMBIENT COMPRESSOR LOCKOUT.

17. CIRCUIT AS SHOWN IS FOR A CUSTOMER SUPPLIED EVAPORATOR FAN MOTOR (5B1) AND EVAP FAN STARTER (5K1). WHEN "EVP" OPTION IS REQUIRED. THIS CIRCUIT BECOMES A CIRCULATING PUMP MOTOR (5B1) AND A CIRCULATING PUMP STARTER (5K1).

18. INSTALL JUMPER (6TB9-7 & 8) WHEN HOT GAS BYPASS OPTION IS REQUIRED WITH OPTIONAL "EVP". INSTALL HOT GAS BYPASS SOLENOID VALVE (6L5) AS SHOWN.

19. WHEN DUCT SENSOR (6RT1) IS REQUIRED. REMOVE RESISTOR (7R1 FROM 7TB8-5 & 6).

20. CUSTOMER SUPPLIED HEATER CONTACTOR CONTROL CIRCUIT -
120V/240V/1PH MAX RATING = 750VA INRUSH. 75VA SEALED;
24V/1PH MAX RATING = 240VA INRUSH. 60VA SEALED.

21. ISOLATION LIQUID SOLENOID VALVES (5L1,5L3) ARE REQUIRED FOR CHARGE ISOLATION (PROVIDED & INSTALLED BY THE FIELD).
UNLOADING LIQUID SOLENOID VALVES (5L2,5L4). IF APPLICABLE. ARE PROVIDED & INSTALLED BY THE FIELD.

22. CAUTION - DO NOT RUN LOW VOLTAGE WIRE (30 VOLTS MAXIMUM) IN CONDUIT OR RACEWAY WITH HIGHER VOLTAGE WIRE.

23. THE FOLLOWING CAPABILITIES ARE OPTIONAL - THEY ARE IMPLEMENTED & WIRED AS REQUIRED FOR A SPECIFIC APPLICATION.

    - A. UNIT DISCONNECT SWITCH - NON FUSED (AVAILABLE ON ALL CONTROL OPTIONS)
    - B. HOT GAS BYPASS (AVAILABLE ON ALL CONTROL OPTIONS)
    - G. RETURN AIR SENSOR (AVAILABLE WITH "CONSTANT VOLUME" CONTROL)
    - T. FLOW SWITCH (AVAILABLE WITH "EVP" CONTROL)

24. SUPPLY CONDUCTORS MUST BE SIZED PER AMPACITIES BASED ON 60 [C WIRE.

IMPORTANT!
DO NOT ENERGIZE
UNIT UNTIL CHECK-OUT
AND START-UP PROCEDURE
HAS BEEN COMPLETED

Figure 41. Field connection diagram RAUJ80-120 - no system control

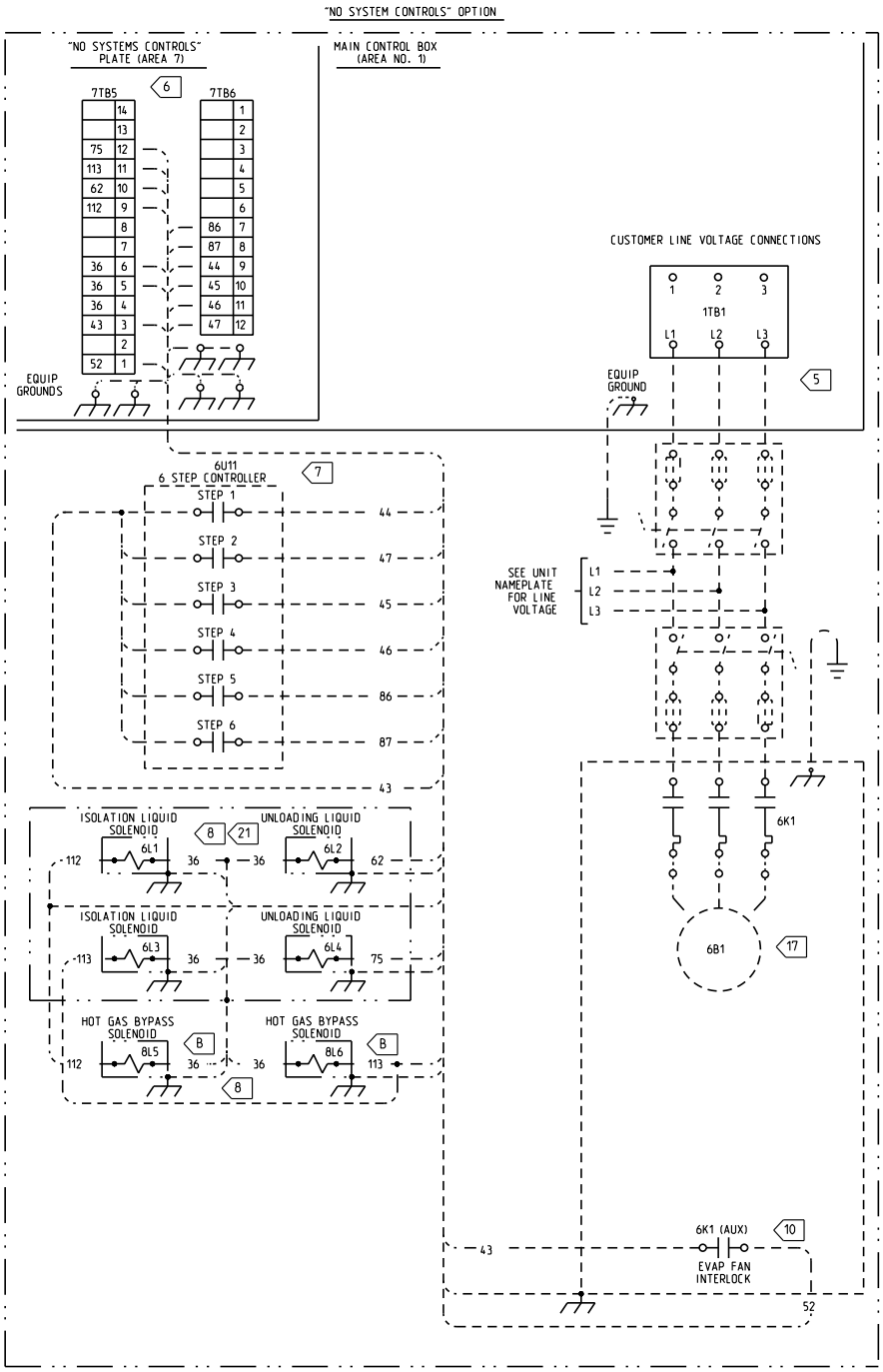

2307-9144

Figure 42. Field connection diagram notes - RAUJ 80-120 - all system controls

NOTE:

1. ALL WIRING AND COMPONENTS SHOWN DASHED TO BE SUPPLIED AND INSTALLED BY CUSTOMER IN ACCORDANCE WITH LOCAL AND NATIONAL ELECTRICAL CODES.
2. ALL WIRING TO BE N.E.C. CLASS 1 UNLESS OTHERWISE SPECIFIED.
3. CAUTION -- DO NOT ENERGIZE UNIT UNTIL CHECK-OUT AND START-UP PROCEDURES HAVE BEEN COMPLETED.
4. ALL THREE PHASE MOTORS ARE PROTECTED UNDER PRIMARY SINGLE PHASE FAILURE CONDITIONS.

5 SEE TABLE OF ACCEPTABLE WIRE SIZES FOR CONNECTION TO MAIN UNIT TERMINAL BLOCK (1TB1) OR DISCONNECT SWITCH (1S1).

6 SIZE CONTROL WIRING SUCH THAT TOTAL WIRE RESISTANCE OF THE RUN DOES NOT EXCEED 6 OHMS. SEE TABLE FOR WIRE SELECTION.

7 6 STEP CONTROLLER (6U11) MIN. RATING - N.O. CONTACTS = 150 VA INRUSH/75 VA SEALED; N.C.CONTACTS = 80 VA INRUSH/40 VA SEALED.

8 ISOLATION LIQUID SOLENOID VALVES (6L1.6L3). UNLOADING LIQUID SOLENOID VALVES (6L2.6L4) AND HOT GAS BYPASS VALVES (8L5.8L6) -- MAX. SOLENOID RATINGS ARE 72 VA INRUSH/30 VA SEALED.

9 EVAPORATOR OR CIRCULATING PUMP CONTROL CIRCUIT MAX. RATINGS ARE 240 VA INRUSH/40 VA SEALED.

10 STARTER INTERLOCK (6K1 AUX). OUTSIDE AIR T-STAT (6S57). SYSTEM ON/OFF SWITCH (6S1). STARTER OVERLOAD RELAY (6K1 OL) AND FLOW SWITCH (8S58) MIN. RATINGS ARE 250 VA INRUSH/125 VA SEALED.

12 REMOVE RESISTOR (7R5 - 7TB8-4 & 5) WHEN FIELD SUPPLIED ECONOMIZER IS REQUIRED WITH OPTIONAL VARIABLE AIR VOLUME ("VAV") CONTROLS.

13 WIRING FOR CHILLER TEMP SENSOR (8RT2) AND DISCHARGE AIR SENSOR (8RT3) MUST BE SHIELDED CABLE AND NOT RUN IN CONDUIT WITH OTHER WIRING. FOR RUNS UNDER 500 FEET USE 16 GA (MIN) WIRE. FOR RUNS FROM 500 TO 1000 FEET USE 14 GA (MIN) WIRE. MAXIMUM RUN IS 1000 FEET. GROUND SHIELD AT ONE END ONLY.

14 SUGGESTED SYSTEM CONTROL SWITCH (6S2) FOR "VAV" CONTROLS OPTION IS CUTLER HAMMER 7580K5 SPST TOGGLE SWITCH OR EQUIVALENT.

15 WHEN NIGHT SETBACK IS REQUIRED WITH OPTIONAL "VAV". PROVIDE A CONTACT CLOSURE SUITABLE FOR A DRY CIRCUIT WITH MIN. RATING OF 125 VA/24 VAC - PILOT DUTY. REMOVE JUMPER (7TB7-4 & 5) WHEN REQUIRED.

16 OUTSIDE AIR T-STAT (6S57) IS REQUIRED ONLY WITH "EVP" OPTION - FOR LOW AMBIENT COMPRESSOR LOCKOUT.

17 CIRCUIT AS SHOWN IS FOR A CUSTOMER SUPPLIED EVAPORATOR FAN MOTOR (6B1) AND EVAP FAN STARTER (6K1). WHEN "EVP" OPTION IS REQUIRED. THIS CIRCUIT BECOMES A CIRCULATING PUMP MOTOR (6B1) AND A CIRCULATING PUMP STARTER (6K1).

18 INSTALL JUMPER (8TB9-7 & 8) WHEN HOT GAS BYPASS OPTION IS REQUIRED WITH OPTIONAL "EVP". INSTALL HOT GAS BYPASS SOLENOID VALVE (8L5) AS SHOWN.

19 CAUTION - DO NOT RUN LOW VOLTAGE WIRE (30 VOLTS MAXIMUM) IN CONDUIT OR RACEWAY WITH HIGHER VOLTAGE WIRE.

20. THE FOLLOWING CAPABILITIES ARE OPTIONAL - THEY ARE IMPLEMENTED AND WIRED AS REQUIRED FOR A SPECIFIC APPLICATION.

B HOT GAS BYPASS (AVAILABLE ON ALL CONTROL OPTIONS)

T FLOW SWITCH (AVAILABLE WITH "EVP" CONTROL)

21 ISOLATION LIQUID SOLENOID VALVES (6L1, 6L3) ARE REQUIRED FOR CHARGE ISOLATION (PROVIDED & INSTALLED BY THE FIELD). UNLOADING LIQUID SOLENOID VALVES (6L2, 6L4), IF APPLICABLE, ARE PROVIDED & INSTALLED BY THE FIELD.

Variable Air Volume Control (Honeywell W7100A)

In a variable air volume system, the desired space temperature is maintained by varying the amount of conditioned air being delivered to the space. As the cooling requirements of the space decreases, less air is delivered to the zone; conversely, as the cooling requirements of the space increases, a greater volume of air is delivered to the zone.

The descriptions of the following basic input devices used with the Honeywell W7100A discharge air controller are to acquaint the operator with their function as they interface with the controller. Refer to field connection diagram numbers 2307-9122 (for 20-60) and 2307-9144 (for 80-120) for the specific component connections at the unit control panel.

For discussion of evaporator fan interlock, hot gas bypass, and economizer connections, refer to the section "Controls Using 115 VAC," p. 52.

Figure 43. Field connection diagram RAUJ20-60 - variable air volume control

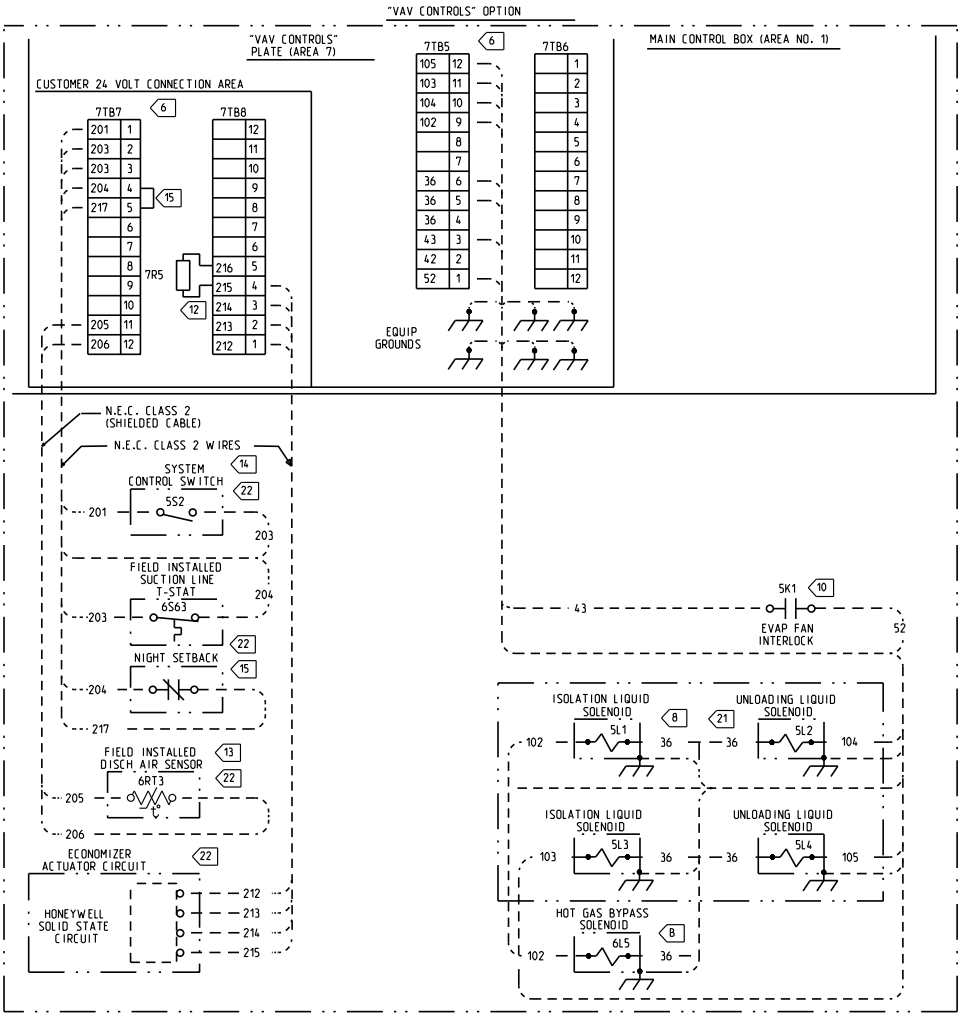

2307-9122

Refer to wiring notes on Figure 40, p. 57.

Figure 44. Field connection diagram RAUJ80-120 - variable air volume control

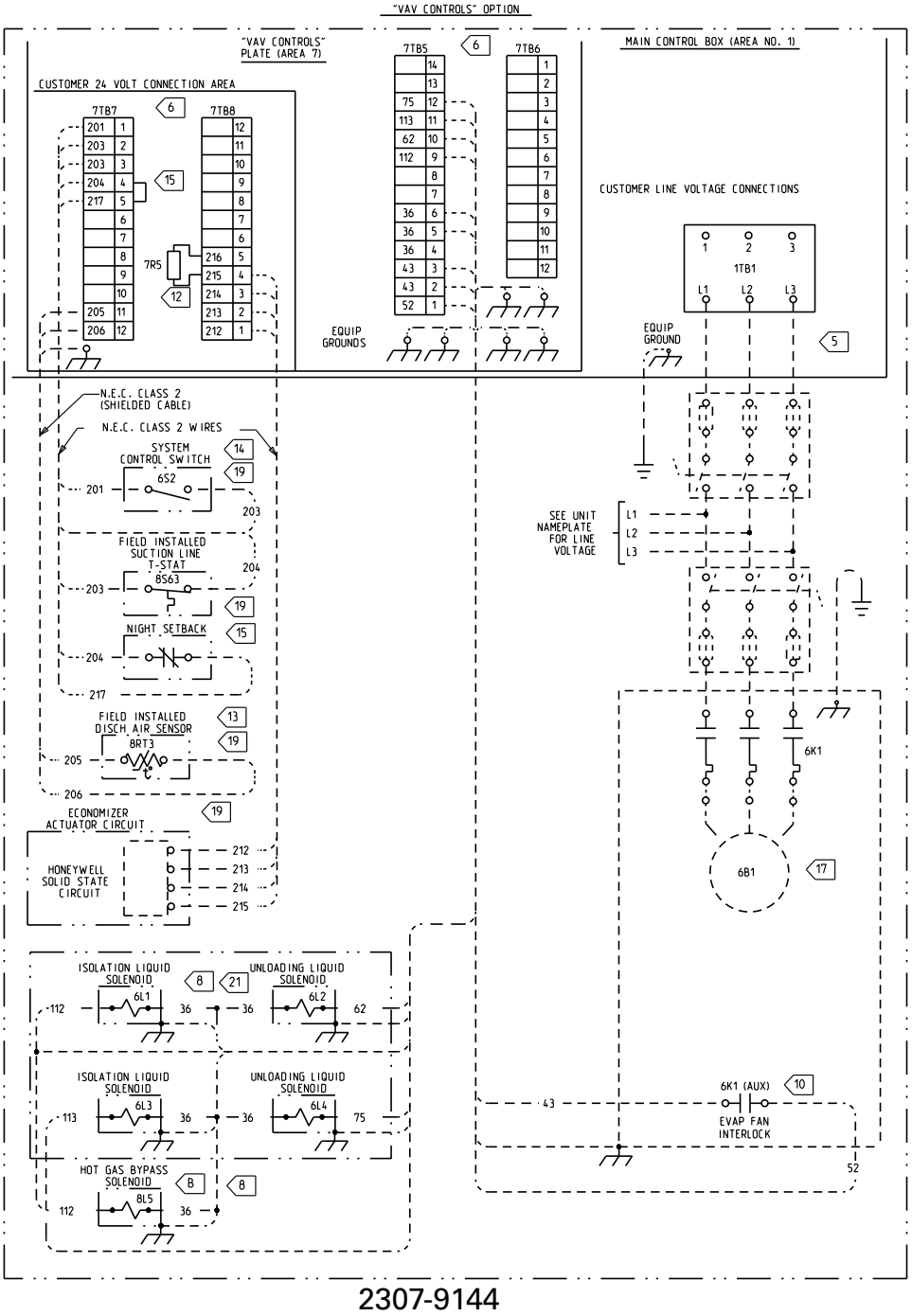

Refer to wiring notes on Figure 42, p. 59.

Discharge Air Sensor (Honeywell 6RT3 or Honeywell 8RT3) Discharge Air Sensor

Each unit ordered with variable air volume controls (digit 9 in the model number) is shipped with a Honeywell 6RT3 or 8RT3 discharge air sensor.

⚠WARNING

Hazardous Voltage!

Disconnect all electric power, including remote disconnects before servicing. Follow proper lockout/tagout procedures to ensure the power cannot be inadvertently energized. Failure to disconnect power before servicing could result in death or serious injury.

⚠WARNING

Proper Field Wiring and Grounding Required!

All field wiring MUST be performed by qualified personnel. Improperly installed and grounded field wiring poses FIRE and ELECTROCUTION hazards. To avoid these hazards, you MUST follow requirements for field wiring installation and grounding as described in NEC and your local/state electrical codes. Failure to follow code could result in death or serious injury.

Install sensor in a turbulent free area of discharge air duct where it will provide accurate supply air sensing. See Figure 45, p. 62 for installation and sensor dimensions. The sensor serves two functions:

1. Sends supply air temperature data to Discharge Air Controller as an analog input, to control the economizer (if applicable) and cycling of compressors.
2. Low limit sensor for system when supply air temperature reaches too high a delta T between actual supply air temperature and supply air temperature setpoint.

Before installing any connecting wiring, see Figure 5, p. 11 to Figure 18, p. 24 for electrical access locations. Wire sensor per field connection diagram, numbers 2307-9122 (for 20-60) and 2307-9144 (for 80-120). Shielded cable (Belden 8760 or equivalent) must be used when wiring sensor to the terminal board inside unit control panel.

Connect shielded cable to appropriate terminals on terminal board (7TB7), in control panel.

Ground shield (at unit only) using ground screw in customer 24 volt connection area as shown in field connection diagram.

Figure 45. Discharge air sensor assembly

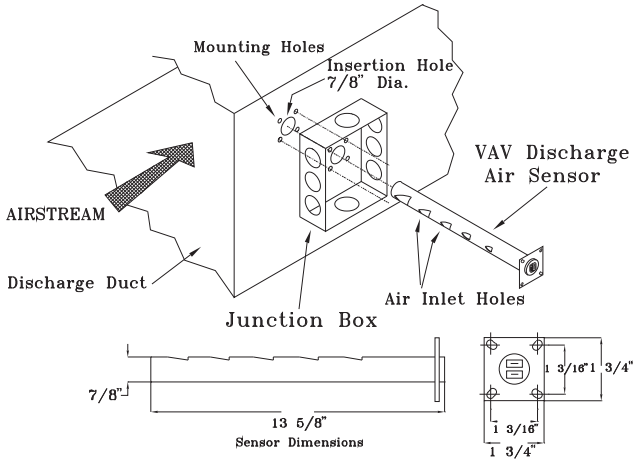

Suction Line Thermostat

⚠WARNING

Hazardous Voltage!

Disconnect all electric power, including remote disconnects before servicing. Follow proper lockout/tagout procedures to ensure the power cannot be inadvertently energized. Failure to disconnect power before servicing could result in death or serious injury.

Each unit ordered with variable air volume controls (digit 9 in the model number) is shipped with a suction line thermostat (6S63) that must be field installed.

Locate the thermostat close to the expansion valve bulb on a slightly flattened portion of the suction line. The thermostat must be securely fastened to the suction line and a field provided thermoconductive grease must be applied to the area to ensure good heat transfer.

Before installing any connecting wiring, see Figure 5, p. 11 to Figure 18, p. 24 for electrical access locations. Wire suction line thermostat per field connection diagram, numbers 2307-9122 (for 20-60) and 2307-9144 (for 80-120). See Table 16, p. 53 (AC Conductors) for wiring specifications.

Insulate the suction line, where the thermostat is mounted, to isolate it from the surrounding air.

Night Setback

⚠WARNING

Hazardous Voltage!

Disconnect all electric power, including remote disconnects before servicing. Follow proper lockout/tagout procedures to ensure the power cannot be inadvertently energized. Failure to disconnect power before servicing could result in death or serious injury.

If night setback operation is desired, connect a set of normally open contacts (field provided) to the appropriate terminals on the terminal board (7TB7), in the unit's control panel. Remove the factory installed jumper at the terminal board when making the final wiring termination. Refer to the field connection diagram, numbers 2307-9122 (for 20-60) and 2307-9144 (for 80-120) for details.

EVP Chiller Control

Each unit ordered for EVP Chiller applications (digit 9 in the model number), is shipped with the following controls:

- EVP Remote Panel w/ W7100G Controller
- Freezestat (6S12)
- Chiller Water Temperature Sensor (6RT2)
- Freezestat Bulb well
- Chilled Water Temperature Sensor Well

The installation of the freezestat bulb well, freezestat bulb, and the chilled water temperature sensor was discussed in the "Chilled Water Piping" section. Refer to that section for their installation locations and dimensional data.

The chiller control (located in the remote panel) controls the system operation by responding to the leaving water temperature. The remote panel must be mounted indoors and within 20 feet of the chiller. Figure 46, p. 63 illustrates the remote panel dimensional data, the component locations, the locations for the shipwith items, grounding lugs, and the field connection terminal board 6TB9. Refer to the field connection diagram illustrated in Figure 47, p. 64 (20-60T) and Figure 48, p. 65 (80-120T) for the interconnecting points between the remote panel and the unit's control panel.

Figure 46. EVP Chiller Remote Panel

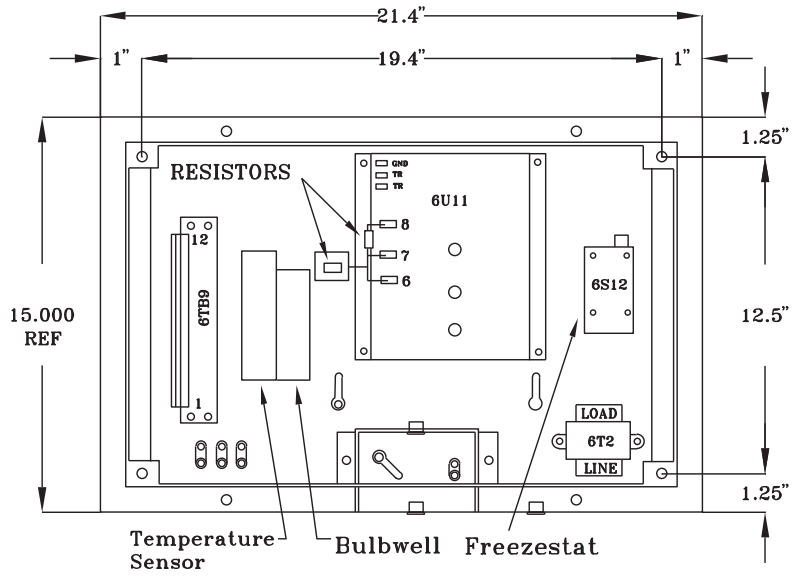

Figure 47. Field connection diagram - RAUJ-C20-60 - EVP chiller applications

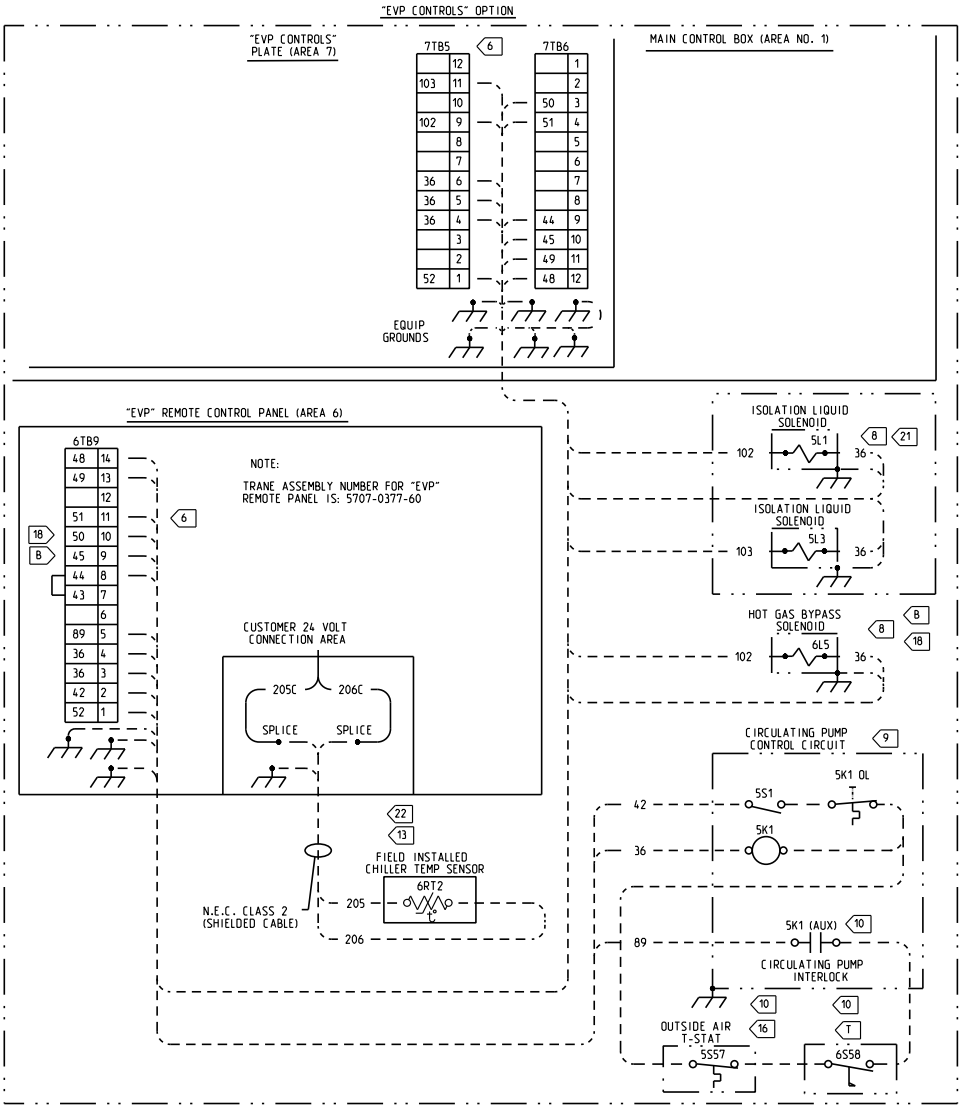

2307-9122

Refer to wiring notes on Figure 40, p. 57.

Figure 48. Field connection diagram - RAUJ-C80-120 EVP chiller applications

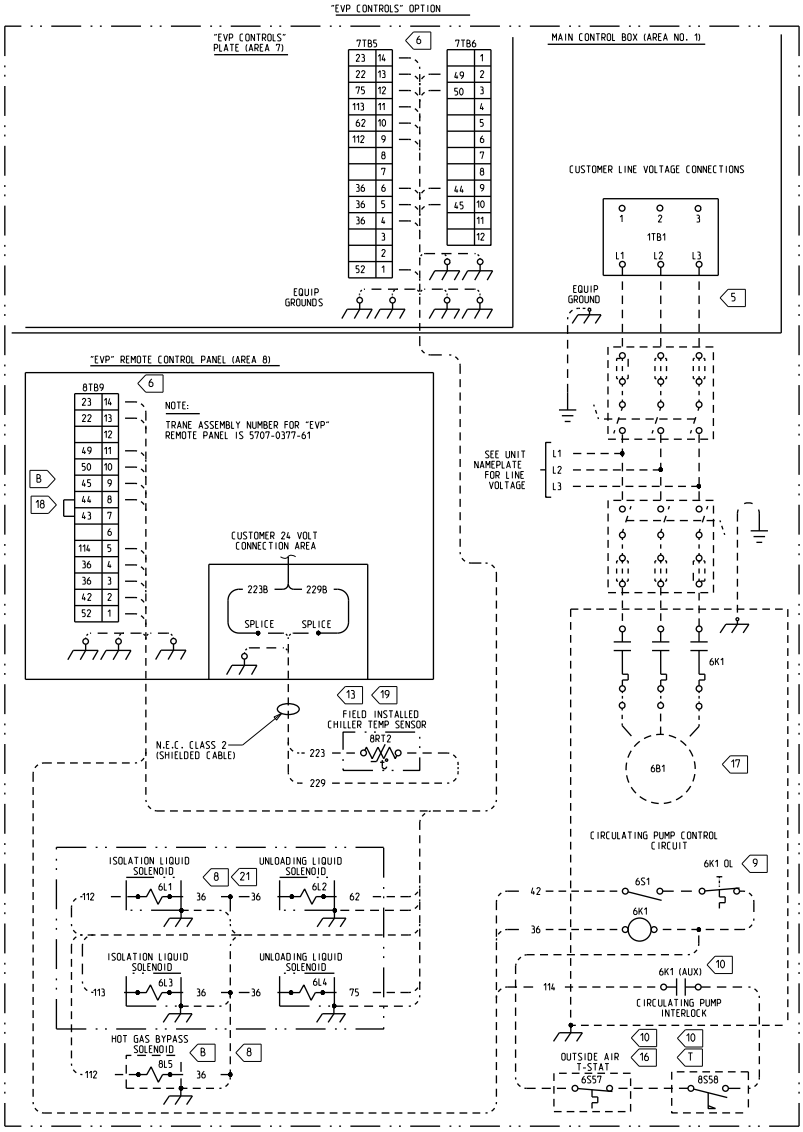

2307-9144

See wiring notes on Figure 42, p. 59..

⚠WARNING

Proper Field Wiring and Grounding Required!

All field wiring MUST be performed by qualified personnel. Improperly installed and grounded field wiring poses FIRE and ELECTROCUTION hazards. To avoid these hazards, you MUST follow requirements for field wiring installation and grounding as described in NEC and your local/state electrical codes. Failure to follow code could result in death or serious injury.

A ground wire must be installed between the EVP remote panel and the unit control panel.

W7100G Discharge Chilled Water Controller

The discharge chilled water controller (6U11) is shipped from the factory with a combination wire/ resistor type jumper installed across Terminals 6, 7, & 8. The resistive portion of the jumper is across Terminals 7 & 8, which set the number of operating stages, of the control. As shipped, a 200 ohm resistive jumper is installed across Terminals 7 & 8 on the controller. The 200 ohm resistive jumper is required for two (2) stage operation on 20 through 30 Ton units. If the unit is a 20, 25, or 30 Ton unit, locate the bag that is secured to the controller, and discard it.

⚠WARNING

Hazardous Voltage!

Disconnect all electric power, including remote disconnects before servicing. Follow proper lockout/tagout procedures to ensure the power cannot be inadvertently energized. Failure to disconnect power before servicing could result in death or serious injury.

For 40 through 60 Ton units, requiring four (4) stages of operation, a 402 ohm resistive jumper must be installed across Terminals 7 & 8 on the controller. Remove the combination wire/resistor jumper containing the 200 ohm resistor from Terminals 6, 7, & 8. Locate the bag that is secured to the controller, and install the 402 ohm combination jumper across Terminals 6, 7, & 8 on the controller. Refer to the remote panel illustration for the terminal identification.

Note: *The resistor portion of the combination jumper must be installed across Terminals 7 & 8 on the controller.*

For 80-120 Ton units, requiring six (6) stages of operation, a 604 ohm resistive jumper is needed across Terminals 7 & 8 on the controller. This jumper is factory installed.

The descriptions of the following input devices are to acquaint the operator with their function as they interface with the Honeywell W7100G controller.

Note: *All wiring must comply with local and national electrical codes (NEC).*

Outside Air Thermostat (5S57 Field Provided)

The setpoint for the outside air thermostat is based upon the working ambient selected when the unit was ordered. A Zero ("0") in the 11th digit of the model number indicates the system is designed for standard ambient operation of 40°F and above. A One ("1") in the 11th digit of the model number indicates the system is designed for low ambient operation of 0°F and above. Therefore, select a thermostat with the appropriate operating range based on the unit specifications. See field connection diagram for the specific connection points inside the remote panel.

Constant Volume Control (Honeywell W973) — 20 - 60TUnits Only

The descriptions of the following basic input devices used with the Honeywell W973 Master Energy Controller (MEC) are to acquaint the operator with their function as they interface with the controller. Refer to field connection diagram, number 2307-9122, for the specific component connections at the unit's control panel.

Figure 49. Field connection diagram - RAUJ-20-60 constant volume control applications

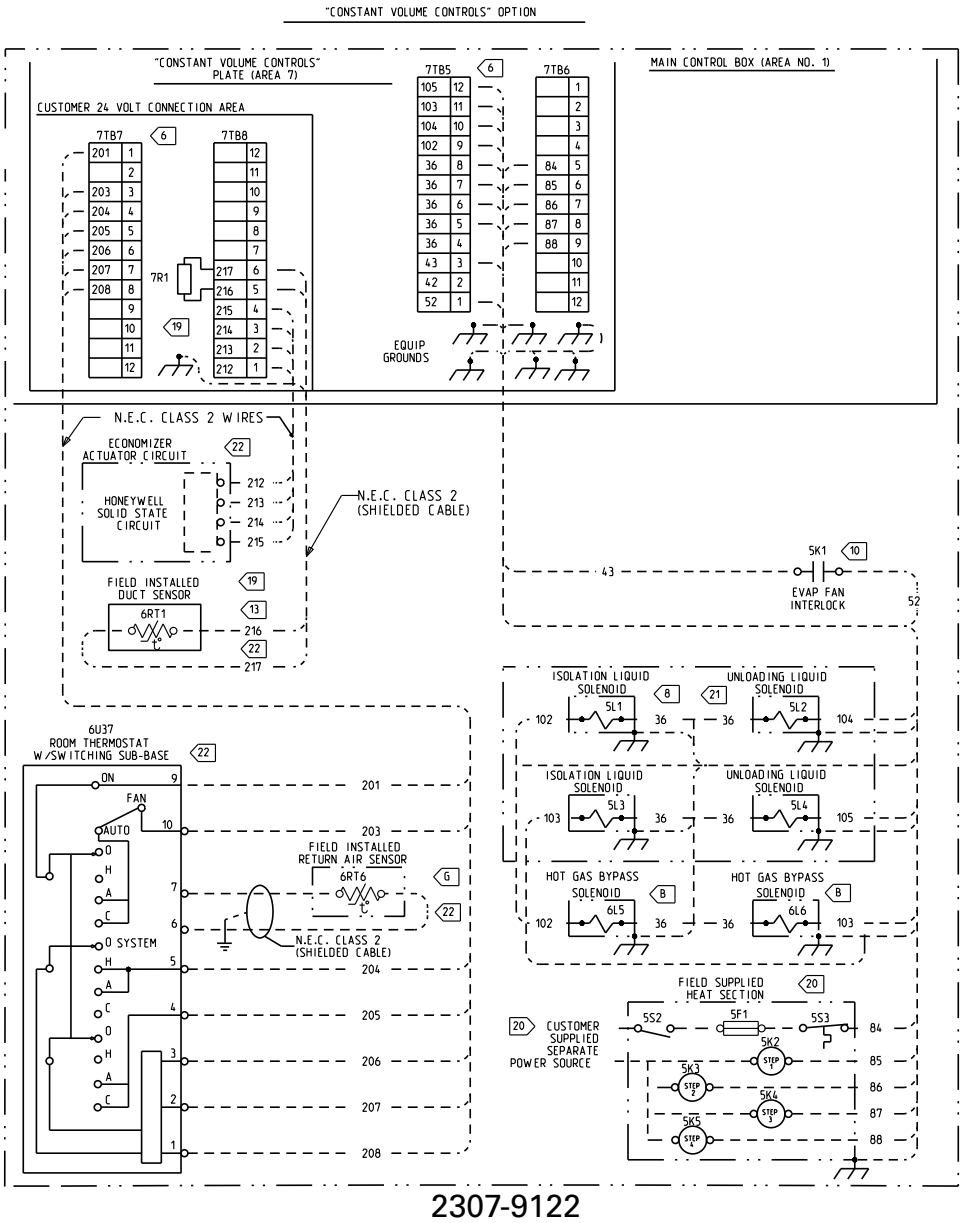

2307-9122

Refer to wiring notes on Figure 40, p. 57.

Electronic Zone Thermostat (Honeywell T7067)

Each unit ordered with constant volume controls (in the model number) is shipped with a Honeywell T7067 electronic zone thermostat. A Honeywell switching subbase (Q667) is also included. The switching subbase allows the operator to select the "System Mode" of operation, i.e., Cool, Heat, Auto, or Off and the "Fan Mode" of operation, i.e., On or Auto.

Note: *As long as the status of the system is in an occupied mode, the supply fan will operate continuously. The fan will only cycle in the "Auto" mode during unoccupied periods.*

The zone thermostat should be located in an area with good air circulation to enhance zone temperature averaging. Position the thermostat about 54" above the floor in a frequently occupied area.

Do not mount the thermostat where its sensing element may be affected by:

a. Drafts or "dead" spots behind doors or in corners;
b. Hot or cold air from ducts;
c. Radiant heat from the sun, or from appliances;
d. Concealed pipes and chimneys;
e. Vibrating surfaces; or
f. Unconditioned areas behind the thermostat (e.g., outside walls).

Mount the thermostat subbase on either a standard 2" X 4" handy box, a comparable European outlet box, or on any nonconductive flat surface. Refer to the illustration in Figure 50, p. 68 for mounting details.

Note: *Specific installation instructions are packaged with each thermostat and subbase. For subbase and thermostat terminal identification, refer to Figure 51, p. 69.*

Thermostat Checkout

Once the subbase is mounted, before connecting any wiring, use an ohm meter and complete the continuity checks listed in Table 20, p. 69.

Thermostat Wiring

⚠WARNING

Hazardous Voltage!

Disconnect all electric power, including remote disconnects before servicing. Follow proper lockout/tagout procedures to ensure the power cannot be inadvertently energized. Failure to disconnect power before servicing could result in death or serious injury.

Before installing any connecting wiring, refer to Figure 5, p. 11 to Figure 18, p. 24 for the electrical access locations provided on the unit. Wire the thermostat in accordance with field connection diagram, numbers 2307-9122 (for 20-60) and 2307-9144 (for 80-120).

Figure 50. T7067 electronic zone thermostat & Q667 switching subbase

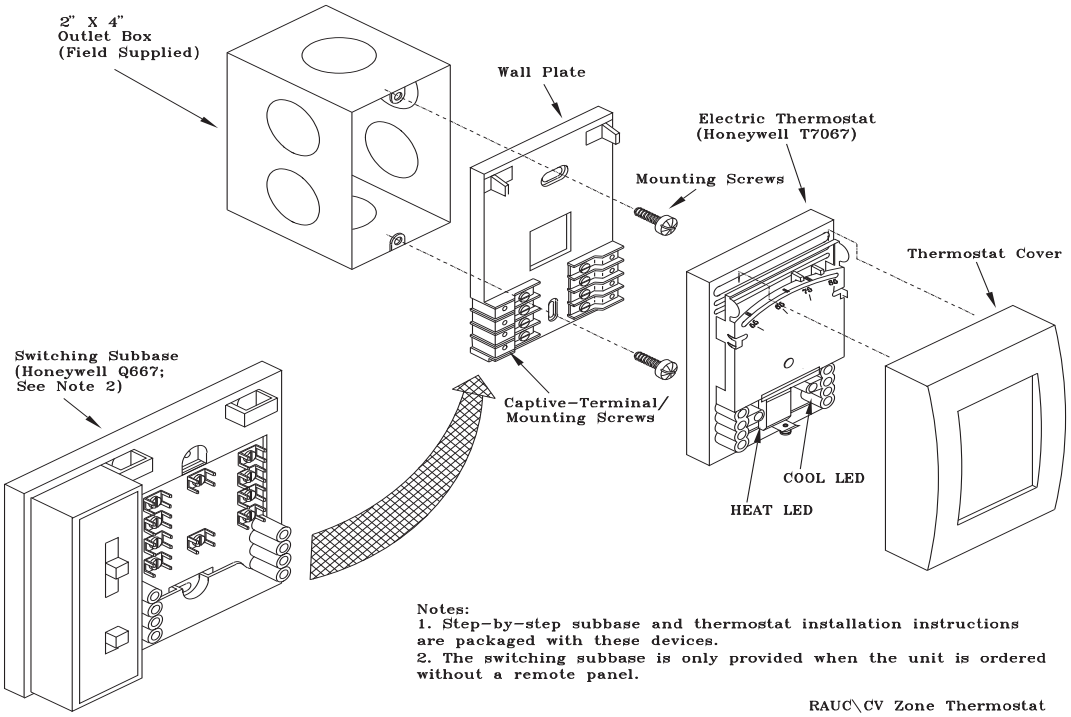

Figure 51. Q667 switching subbase & T7067 thermostat terminal identification

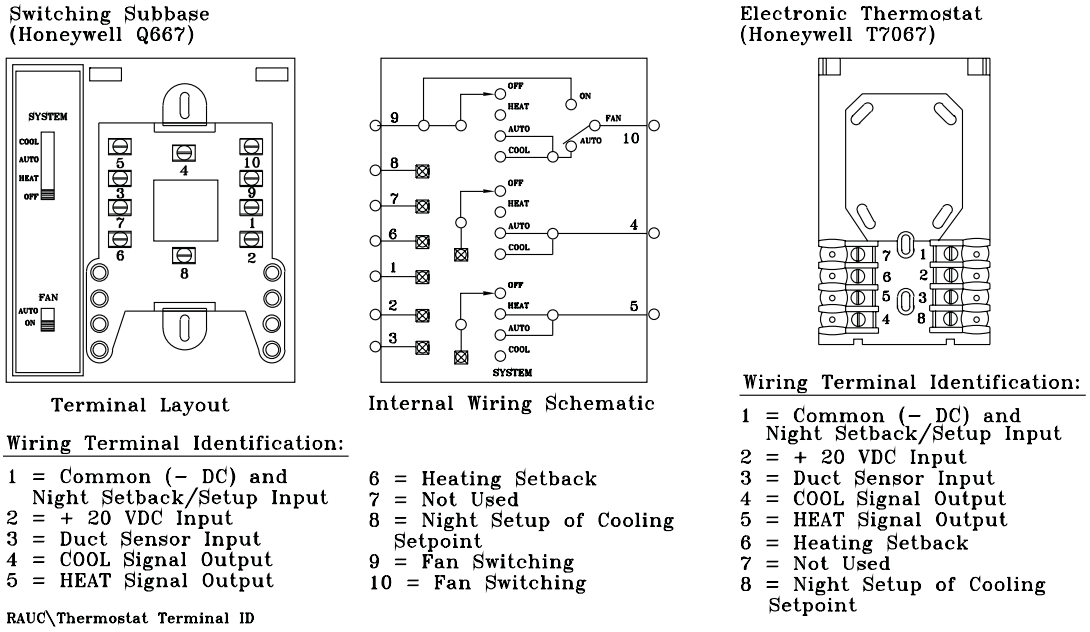

Table 20. (Q667) switching subbase

Subbase Switch Positions		Check Continuity between These Terminal Pairs	Circuit should be
Fan	System		
ON	N/A	9 (Subbase) & 10 (Subbase)	Closed
AUTO	OFF	9 (Subbase) & 10 (Subbase)	Open
		5 (Subbase) & 5 (T'stat)	Open
		4 (Subbase) & 4(T'Stat)	Open
AUTO	HEAT	9 (Subbase) & 10 (Subbase)	Open
		5 (Subbase) & 5 (T'stat)	Closed
		4 (Subbase) & 4(T'Stat)	Open
AUTO	AUTO	9 (Subbase) & 10 (Subbase)	Closed
		5 (Subbase) & 5 (T'stat)	Closed
		4 (Subbase) & 4(T'Stat)	Closed
AUTO	COOL	9 (Subbase) & 10 (Subbase)	Closed
		5 (Subbase) & 5 (T'stat)	Open
		4 (Subbase) & 4(T'Stat)	Closed

Discharge Air Sensor (Honeywell 6RT1)

A discharge air sensor ships with each unit when the constant volume control option is ordered. The sensor should be installed in a turbulent free area of the discharge air duct at a location that will provide accurate supply air sensing. Refer to the illustration in Figure 45, p. 62 for installation and sensor dimensional information.

⚠WARNING

Hazardous Voltage!

Disconnect all electric power, including remote disconnects before servicing. Follow proper lockout/tagout procedures to ensure the power cannot be inadvertently energized. Failure to disconnect power before servicing could result in death or serious injury.

Wire the sensor in accordance with field connection diagram, numbers 2307-9122 (for 20-60) and 2307-9144 (for 80-120). As shipped from the factory, a resistor (7R1) is installed on terminal board 1TB8 terminals 5 & 6). Remove this resistor when the sensor is installed. Shielded cable (Belden 8760 or equivalent) must be used when wiring the sensor to the terminal board inside the unit's control panel.

When the sensor is installed, it serves two functions;

1. It sends the supply air temperature to the master energy controller (MEC), in the form of an analog input, to assist in the rate at which the system changes the space temperature. By offsetting the actual zone thermostat setpoint, up or down, the MEC can closer control the zone comfort level.
2. It serves as a low limit for the system when the supply air temperature reaches too high a delta tee between the actual supply air temperature and the zone temperature to help prevent overshooting of the zone thermostat setpoint.

System Pre-Start Procedures

Use the checklist provided below in conjunction with the "General Unit Requirement" checklist" to ensure that the unit is properly installed and ready for operation. Be sure to complete all of the procedures described in this section before starting the unit for the first time.

⚠WARNING

Hazardous Voltage!

Disconnect all electric power, including remote disconnects before servicing. Follow proper lockout/tagout procedures to ensure the power cannot be inadvertently energized. Failure to disconnect power before servicing could result in death or serious injury.

- Turn the field supplied disconnect switch, located upstream of the unit, to the "Off" position.

  Note: *Verify that the 115 volt control switch (1S2) in the unit control box is in the "Off" position.*

- Turn the "System" selection switch (at the Remote Panel) to the "Off" position and the "Fan" selection switch (if applicable) to the "Auto" or "Off" position.
- Check all electrical connections for tightness and "point of termination" accuracy.
- Verify that the condenser airflow will be unobstructed.
- Check the condenser fan blades. Ensure they rotate freely within the fan orifices and are securely fastened to the fan motor shaft.
- Disable the compressor (s) by unplugging the reset relay for each circuit. Refer to the unit-wiring diagram that shipped with the unit.

NOTICE:

Compressor Damage!

Do not allow liquid refrigerant to enter the suction line. Excessive liquid accumulation in the suction lines could result in compressor damage.

- Verify that all compressor service valves, discharge service valves, and liquid line service valves are back seated on each circuit.

Important: *COMPRESSOR SERVICE VALVES MUST BE FULLY OPENED BEFORE START-UP (SUCTION, DISCHARGE, AND LIQUID LINE).*

Important: *After liquid line service valves are fully opened (back seated), close just 1/4 turn to allow for fan pressure control (4S7, 4S8) operation.*

- Check the compressor oil levels. Oil levels must be near or above the top of all compressor sight glasses.
- Pack Stock Units;

  Two low pressure switches are installed at the factory. However, only one is wired into the control circuit. This is to facilitate an EVP chiller or air over evaporator application. Before starting the system, verify that the correct pressure switch is connected to the control circuit. See Table 23, p. 91 for the pressure control settings, and the unit wiring diagram that shipped with the unit, for the appropriate connections.

- Check the condenser coils. They should be clean and the fins should be straight. Straighten any bent coil fins with an appropriate sized fin comb.
- Inspect the interior of the unit for tools and debris.
- Inspect the interior of the unit for tools and debris in preparation for starting the unit and complete the remainder of the "Pre-start" procedures before starting the unit.

EVP Chiller Applications

1. Flush building piping.

NOTICE:

Evaporator Damage!

If acidic commercial flushing solution is used, bypass the EVP chiller to prevent damage to the heat exchanger.

2. Clean strainer. Make sure strainer blow down valve or plug is in place.
3. Connect chiller. Make sure chiller 1/2"x14NPTE plug is in place.
4. Close drain valve
5. Fill system with water.
6. Vent system piping at the highest points.
7. Inspect water piping for leaks and repair.

System Evacuation Procedures

Each refrigeration circuit for split system applications must be evacuated before the unit can be started. Use a rotary type vacuum pump capable of pulling a vacuum of 100 microns or less. Verify that the unit disconnect switch and the system control circuit switches are "OFF".

The oil in the vacuum pump should be changed each time the pump is used with a high quality vacuum pump oil. Before using any oil, check the oil container for discoloration which usually indicates moisture in the oil and/or water droplets. Moisture in the oil adds to what the pump has to remove from the system, making the pump inefficient.

When connecting the vacuum pump to a refrigeration system, it is important to manifold the vacuum pump to both the high and low side of the system (liquid line access valve and suction line access valve). Follow pump manufacturer's directions for proper methods of using vacuum pump.

The lines used to connect pump to the system should be copper and the largest diameter that can practically be used. Using larger line sizes with minimum flow resistance can significantly reduce evacuation time. Rubber or synthetic hoses are not recommended for system evacuation. They have moisture absorbing characteristics which result in excessive rates of evaporation, causing pressure rise during standing vacuum test. This makes it impossible to determine if system has a leak, excessive residual moisture, or a continual or high rate of pressure increase due to hoses.

An electronic micron vacuum gauge should be installed in the common line ahead of the vacuum pump shutoff valve, as shown in Figure 52, p. 71. Close Valves B and C, and open Valve A.

Start vacuum pump. After several minutes, the gauge reading will indicate the maximum vacuum the pump is capable of pulling. Rotary pumps should produce vacuums of 100 microns or less.

NOTICE:

Equipment Damage!

Do not, under any circumstances, use a megohm meter or apply power to the windings of a compressor while it is under a vacuum. Electrical shorting between motor windings and/or housing can occur while in a vacuum, causing motor burnout.

Open Valves B and C. Evacuate the system to a pressure of 300 microns or less. As vacuum is being pulled on the system, it may appear that no further vacuum is being obtained, yet the pressure is high. To facilitate the evacuation process, it is recommended that the vacuum be "Broken".

To break the vacuum, shutoff valves A, B, & C and connect a refrigerant cylinder to the charging port on the manifold. Purge the air from the hose. Raise the standing vacuum pressure in the system to "zero" (0 psig) gauge pressure. Repeat this process two or three times during evacuation.

Note: *It is unlawful to release refrigerant into the atmosphere. When service procedures require working with refrigerants, the service technician must comply with all Federal, State, and local laws.*

Standing Vacuum Test

Once 300 microns or less is obtained, close Valve A and leave valves B and C open. This will allow the vacuum gauge to read the actual system pressure. Let the system equalize for approximately 15 minutes. This is referred to as a "standing vacuum test" where, time versus pressure rise. The maximum allowable rise over a 15 minute period is 200 microns. If the pressure rise is greater than 200 microns but levels off to a constant value, excessive moisture is present. If the pressure steadily continues to rise, a leak is indicated. Figure 53, p. 71 illustrates three possible results of the "standing vacuum test".

If a leak is encounter, repair the system and repeat the evacuation process until the recommended vacuum is obtained. Once the system has been evacuated, break the vacuum with refrigerant, and complete the remaining "Pre-Start Procedures" before starting the unit.

Figure 52. Typical vacuum pump hookup

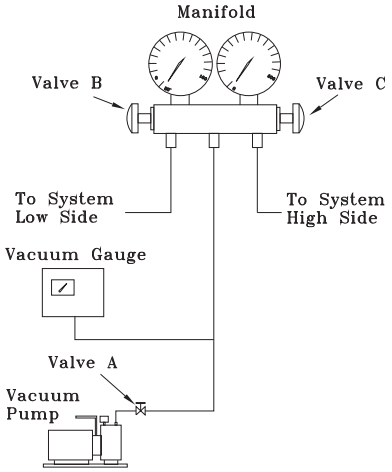

Figure 53. Evacuation time vs. pressure rise

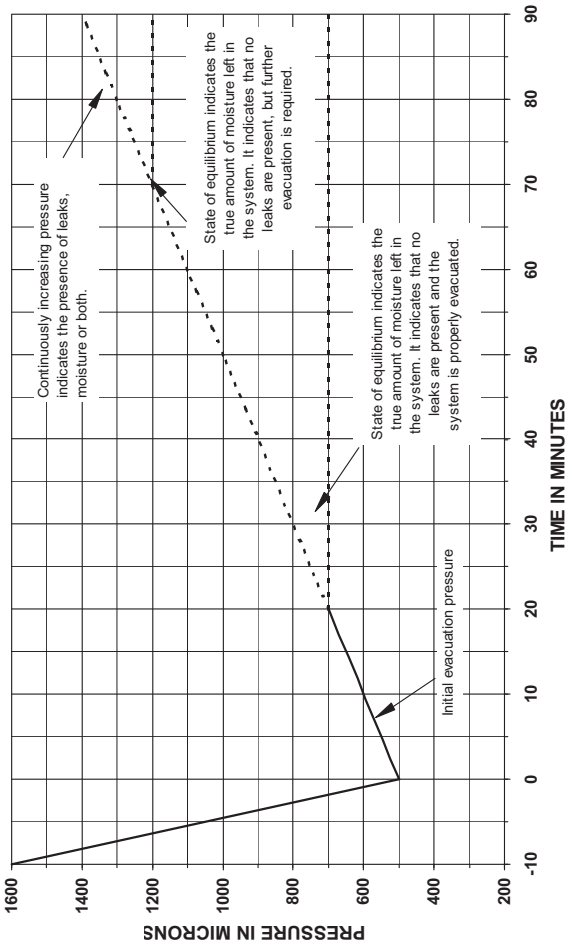

Discharge Air Controller Checkout (Honeywell W7100A)

Note: *The following checkout procedure must be performed in its entirety and in the sequence given.*

⚠WARNING

Hazardous Voltage!

Disconnect all electric power, including remote disconnects before servicing. Follow proper lockout/tagout procedures to ensure the power cannot be inadvertently energized. Failure to disconnect power before servicing could result in death or serious injury.

The W7100A (7U11) discharge air controller can be checked out using a highly accurate digital volt-ohmmeter and the W7100A accessory tool kit (Trane part # TOL-0101 or Honeywell part # 4074EDJ).

1. Turn all control switches to the "OFF" position to deactivate the Evaporator Fan and the Mechanical Cooling.
2. Turn the main power disconnect switch for the evaporator fan and condensing unit "OFF".
3. Disable the mechanical cooling by removing the field installed evaporator fan auxiliary interlock wire from terminal board 7TB5 terminal 3 inside the unit control panel.
4. At the Discharge Air Controller, in the unit control panel, remove the red dust cover from the test plug socket at the bottom of the W7100A. Insert the "Test Plug", from the kit, into the test plug socket. The test plug overrides most of the built-in time delays for staging the compressors "On" and "Off". Refer to the illustration in Figure 54, p. 73 for terminal and control dial identification.
5. Install a jumper across the P and P1 terminals (remote setpoint input), and another jumper across terminals 6 and 7 (reset input) if reset is enabled.
6. Disconnect the wires from terminals T and T1 (discharge air sensor).
7. Remove the 3,400 ohm resistor (blue leads) from the test kit and connect it across terminals T and T1 to simulate a discharge air temperature of 60°F.
8. Set the "Setpoint F" dial at 56°F or below; then set the "Control Band F" dial at 2 to minimize the control response time.
9. At the Discharge Air controller, verify that the controller ground wire is connected to the chassis ground. Refer to the unit wiring diagram that shipped on the unit.

Note: *It is not necessary to set the "Reset F" dial since the factory installed jumper across Terminals 6 and 7 disables this dial.*

10. Turn the control circuit switch 1S2, in the unit control panel, and the main power disconnect switch for the condensing unit to the "ON" position.

⚠WARNING

High Voltage is Present at Terminal Block 1TB1 or Unit Disconnect Switch 1S1!

To prevent injury or death form electrocution, it is the responsibility of the technician to recognize this hazard and use extreme care when performing service procedures with the electrical power energized.

After approximately 2 minutes (time required to drive the economizer fully open), the LEDs on the W7100 should begin to illuminate as the cooling outputs stage "On".

11. At the Discharge Air Controller, use a digital voltmeter to verify there is 24 volts AC across terminals TR & TR.
12. Set the "Setpoint F" dial at 64°F; within 10 seconds, the LEDs should turn "Off" as the cooling outputs stage "Off".
13. Immediately readjust the "Setpoint F" dial to 56°F; the LEDs should begin to illuminate again as the cooling outputs stage "On".

If the unit includes the zone reset option, proceed to the next step; if not, proceed to step 18.

14. Set the "Reset F" dial at 15°F and the "Setpoint F" dial at 41°F; then remove the jumper across terminals 6 & 7.

To simulate a call for maximum reset, install the 1780 ohm resistor (red leads), from the test kit, across terminals 6 and 7. The cooling LEDs should remain lit.

15. Turn the "Setpoint F" dial to 49°F; within 1 to 2 minutes, the LEDs should turn "Off" as the cooling outputs stage "Off".
16. As soon as all of the cooling LEDs are "Off", remove the 1780 ohm resistor from terminals 6 and 7 and re-install the jumper across these terminals.
17. Adjust the "Setpoint F" dial to 56°F; within 1 minute, the LEDs should illuminate as the cooling outputs stage "On".

If the system includes an economizer, complete steps 18 through 23 to verify proper economizer control operation; if not, proceed to step 24.

18. With all of the cooling LEDs "On", measure the DC voltage across terminals R (-) and W (+). The measured voltage should be 1.7 VDC to 2.1 VDC.
19. Set the "Setpoint F" dial at 64°F to drive the economizer output to the minimum position.

    Within 2 minutes, the LEDs should turn "Off" as the cooling outputs stage "Off".

    In approximately 5 minutes; measure the voltage across terminals R (-) & W (+). The measured voltage should drop to approximately 0.2 VDC.

20. Turn the control circuit switch 1S2, in the unit control panel, and the main power disconnect switch to the "OFF" position.
21. Remove the wires from terminals R, B, W, & Y.
22. Measure the resistance across the following pairs of terminals, and compare the actual resistance readings with the values shown below.

    W7100 Terminals R-to-W = 226 ohms

    W7100 Terminals R-to-B = 432 ohms

    W7100 Terminals R-to-Y = 226 ohms
23. Reconnect the economizer leads R, B, W, & Y to the appropriate terminals on the controller.
24. Turn the control circuit switch 1S2, in the unit control panel, and the main power disconnect switch to the "OFF" position.
25. Remove the jumper, installed in step 5, from terminals 6 & 7.
26. Remove the 3,400 ohm resistor from terminals T & T1 and reconnect the discharge air sensor leads to terminals T & T1.
27. Remove the "Test Plug" from the W7100 test socket and reinstall the red dust cover.
28. Reconnect the field installed evaporator fan auxiliary interlock wire to terminal board 7TB5 terminal 3.
29. Turn all control switches to the "On" position and restore main power to the system.

Figure 54. W7100A discharge air controller

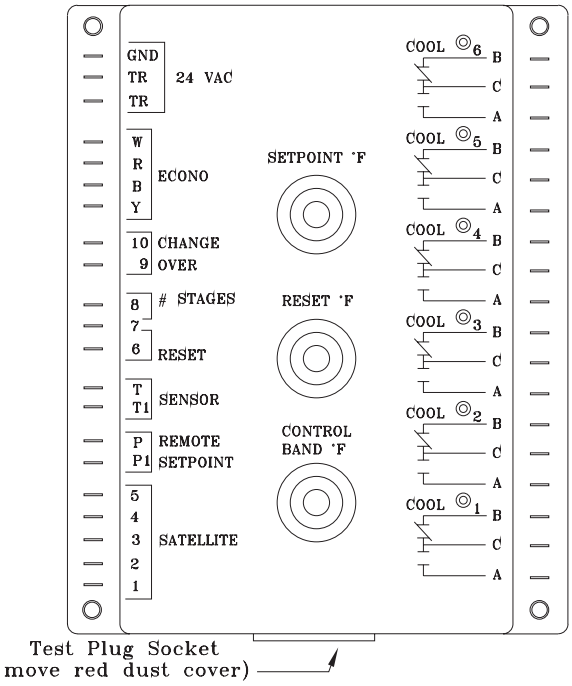

Discharge Air Sensor Checkout (Honeywell Sensor)

⚠WARNING

Hazardous Voltage!

Disconnect all electric power, including remote disconnects before servicing. Follow proper lockout/tagout procedures to ensure the power cannot be inadvertently energized. Failure to disconnect power before servicing could result in death or serious injury.

1. Verify that the main power disconnect switch and the control circuit switch 1S2, in the unit control panel, is "OFF".
2. At the Discharge Air Controller, in the unit control panel, disconnect the wire connected to Terminal T1. Use a digital ohmmeter to measure the resistance across Terminal T and the wire removed from Terminal T1.
3. Use the conversion chart in Figure 55, p. 74 to convert the measured resistance to an equivalent temperature.
4. Measure the actual temperature at the sensor location. If the measured resistance in step 2 is not within ± 10.0 ohms of the actual temperature, the sensor is out of range; replace it.

Note: *Before condemning the sensor, verify that the connecting cable resistance is not excessive. Refer to the "Field Installed Control Wiring" section.*

5. Make all necessary repairs and reconnect the duct sensor lead to terminal T1 on the controller.
6. Restore power to the system and turn all control switches to the "ON" position.

Economizer Actuator Checkout

(Used with "Zone" or "Discharge Air" Temp Controller)

The following procedures should be used to verify that the field provided economizer actuator(s) function properly. These procedures are based on using a typical Honeywell actuator. If another type actuator is used, refer to the specific checkout procedures for that actuator.

⚠WARNING

Hazardous Voltage!

Disconnect all electric power, including remote disconnects before servicing. Follow proper lockout/tagout procedures to ensure the power cannot be inadvertently energized. Failure to disconnect power before servicing could result in death or serious injury.

1. Turn all control switches to the "Off" position to deactivate the Evaporator Fan and the Mechanical Cooling. Verify that the main power disconnect switch

for the condensing unit and the control circuit switch 1S2, in the unit control panel, is "OFF".

2. Verify that the field provided disconnect switch and/or the control circuit switch for the economizer actuator(s) is "OFF".
3. At the actuator, disconnect the control wires connected to Terminals W, R, B, and Y.
4. Install a jumper across the actuator terminals R-to-W-to-B.
5. Close the field provided disconnect switch and/or the control circuit switch for the economizer actuator(s). If the economizer actuator is working properly, it should drive to mid-position.
6. Open the field provided disconnect switch and/or the control circuit switch for the economizer actuator(s) and remove the jumpers installed in step 4.
7. Reconnect the control wires to the actuator terminals W, R, B, and Y.
8. Restore power to the actuator circuit and turn all control switches to the "ON" position and restore power to the system.

Figure 55. Discharge duct sensor 6RT2 & 6RT3 "temperature vs resistance" curve

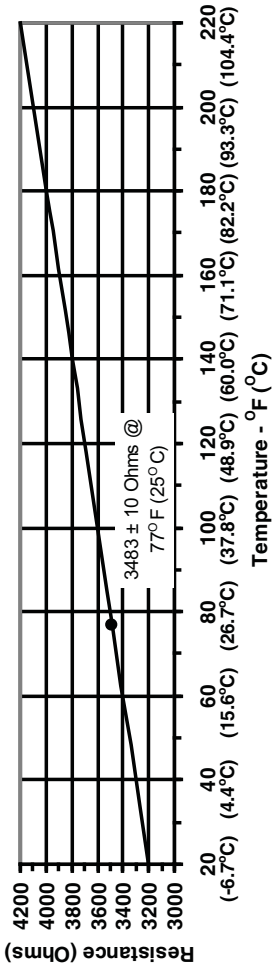

EVP Chiller Control Checkout (Honeywell W7100G)

Note: *The following checkout procedure must be performed in its entirety and in the sequence given.*

⚠WARNING

Hazardous Voltage!

Disconnect all electric power, including remote disconnects before servicing. Follow proper lockout/tagout procedures to ensure the power cannot be inadvertently energized. Failure to disconnect power before servicing could result in death or serious injury.

The W7100G (6U11) chilled water controller can be checked out using a highly accurate digital voltohmmeter, the W7100 accessory tool kit (Trane part # TOL-0101 or Honeywell part # 4074EDJ), and the Honeywell 4074EFV resistor bag assembly.

1. Verify that the main power disconnect switch and the control circuit switch 1S2, in the unit control panel, is "OFF".
2. At the unit control panel, unplug the reset relay 1K11 and 1K12, (1K12 used on 40 through 60 Ton units only). Refer to the connection diagram that shipped with the unit for the location of the relay(s).
3. At the Chilled Water controller (6U11) inside the remote panel, disconnect the sensor (6RT2) leads form Terminals T & T1.
4. Remove the 3,400 ohm resistor (blue leads) from the test kit and connect it across Terminals T and T1 to simulate a discharge air temperature of 60°F.
5. Remove the factory-installed jumper (wire 209A) from the "fast response" Terminals 9 & 10.
6. To simulate a call for maximum reset, remove the jumper from Terminals 6 & 7 and install the 1780 ohm resistor (red leads), from the test kit, across Terminals 6 and 7.
7. Install a jumper across the P1 and P2 Terminals (remote setpoint input).
8. Remove the red dust cover from the test plug socket at the bottom of the W7100G. Insert the "Test Plug", from the kit, into the test plug socket. The test plug overrides most of the built-in time delays for staging the compressors "On" and "Off". Refer to the illustration in Figure 56, p. 75 for terminal and control dial identification.
9. Set the "Reset F" dial at 20°F and the "Setpoint F" dial at 10°F
10. "Close" the main power disconnect switch and turn the control circuit switch 1S2, in the unit control panel, "ON".

⚠WARNING

High Voltage is Present at Terminal Block 1TB1 or Unit Disconnect Switch 1S1!

To prevent injury or death form electrocution, it is the responsibility of the technician to recognize this hazard and use extreme care when performing service procedures with the electrical power energized.

11. At the Chilled Water Controller, use a digital voltmeter to verify there is 24 volts AC across terminals TR & TR.
12. After approximately 15 seconds, the LEDs on the W7100G should begin to illuminate as the cooling outputs stage "On".
13. Set the "Setpoint F" dial at 60°F; within 15 seconds, the LEDs should turn "Off" as the cooling outputs stage "Off".
14. Remove the 1780 ohm resistor from Terminals 6 & 7 and reinstall the wire jumper removed in step 6.
15. Set the "Setpoint F" dial at 50°F; within 15 seconds, the LEDs should turn "On" as the cooling outputs stage "On".
16. Turn the control circuit switch 1S2, in the unit control panel, to the "OFF" position.
17. Remove the 3,400 ohm resistor from Terminals T & T1 and reconnect the chilled water temperature sensor leads to Terminals T & T1.
18. Remove the "Test Plug" from the W7100G test socket and reinstall the red dust cover.
19. Plug the reset relay(s) 1K11 and 1k12 (if applicable) back into their receptacle.
20. Turn the control switch 1S2 to the "On" position to restore power to the control system.

Figure 56. W7100G chilled water controller

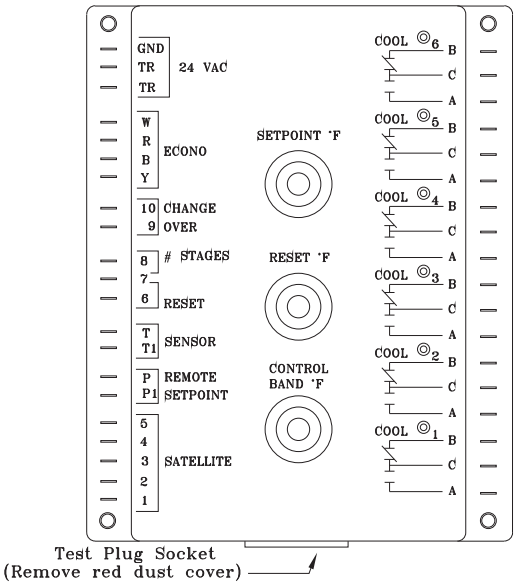

Chilled Water Sensor Checkout (Honeywell Sensor)

⚠WARNING

Hazardous Voltage!

Disconnect all electric power, including remote disconnects before servicing. Follow proper lockout/tagout procedures to ensure the power cannot be inadvertently energized. Failure to disconnect power before servicing could result in death or serious injury.

1. Verify that the main power disconnect switch and the control circuit switch 1S2, in the unit control panel, is "OFF".
2. At the temperature controller, disconnect the wire connected to terminal T1. Use a digital ohmmeter to measure the resistance across terminal T and the wire removed from terminal T1.
3. Use the conversion chart in Figure 37 to convert the measured resistance to an equivalent temperature.
4. Measure the actual temperature at the sensor location. If the measured resistance in step 2 is not within ± 10.0 ohms of the actual temperature, the sensor is out of range; replace it.

Note: *Before condemning the sensor, verify that the connecting cable resistance is not excessive. Refer to the "Field Installed Control Wiring" section.*

5. Make all necessary repairs and reconnect the duct sensor lead to terminal T1 on the controller.
6. Turn all control switches to the "ON" position and restore power to the system.

Master Energy Control Checkout

Available Only For 20 - 60 Ton Units

⚠WARNING

Hazardous Voltage!

Disconnect all electric power, including remote disconnects before servicing. Follow proper lockout/tagout procedures to ensure the power cannot be inadvertently energized. Failure to disconnect power before servicing could result in death or serious injury.

1. Open the system control switches 5S1 and 5S2 to disable the Evaporator Fan and Heating system.
2. Verify that the main power disconnect switch and the control circuit switch 1S2, in the unit control panel, is "OFF".
3. At the Master Energy Controller (7U11), in the unit control panel, remove at least one wire from each of the "Heat Relay" normally open contacts and one from each of the "Cool Relay" normally open contacts.

Insulate the wires with tape to prevent shorting or grounding during control checkout.

4. Close the main power disconnect switch and turn the control circuit switch 1S2, in the unit control panel, "ON".

⚠WARNING

High Voltage is Present at Terminal Block 1TB1 or Unit Disconnect Switch 1S1!

To prevent injury or death form electrocution, it is the responsibility of the technician to recognize this hazard and use extreme care when performing service procedures with the electrical power energized.

5. At the Master Energy Controller, use a digital voltmeter to verify that there is 20 volts DC power between terminals 1 (N) & 2 (+20). Refer to the illustration in Figure 54, p. 73 for terminal identification.

Note: *The wires that are still connected to one side of the "Cool Relay" contacts, are active with 115 volts applied. Ohming the contacts when only one wire is connected will not cause any damage to the ohmmeter. However, do not try to ohm any set of contacts with wires connected to both terminals of that contact.*

6. To verify the "Heating" output relays are operating;
   a. place a jumper between Terminals 2 (+20) & 5 (H).
   b. place the ohmmeter leads across each set of normally open "Heat Relay" contacts. The ohmmeter should read "Resistance" which indicates that the heating output relays have "pulled in".
7. To verify the "Cooling" output relays are operating;
   a. Remove the jumper from Terminals 2 (+20) & 5 (H) and reinstall it between Terminals 2 (+20) & 4 (C).
   b. place the ohmmeter leads across each set of normally open "Cool Relay" contacts. The ohmmeter should read "Resistance" which indicates that the cooling output relays have "pulled in".
8. With all of the "Cooling Output" relays pulled in (step 7), measure the DC voltage across Terminals R (-) and W (+). The measured voltage should be approximately 1.7 to 2.1 VDC.
9. Remove the jumper installed between Terminals 2 (+20) & 4 (C).
10. Measure the voltage again across Terminals R (-) and W (+). The measured voltage should now be approximately 0.2 VDC.
11. Turn the control circuit switch 1S2, in the unit control panel, to the "OFF" position.
12. Remove the wires from Terminals R, B, W, & Y.
13. Measure the resistance across the following pairs of terminals and compare the actual resistance readings with the values shown below:
    (1) MEC Terminals R-to-W = 226 ohms
    (2) MEC Terminals R-to-B = 432 ohms
    (3) MEC Terminals R-to-Y = 226 ohms
14. Reconnect the economizer leads W, R, B and Y to the appropriate terminals on the controller.
15. Turn switches 1S2, 5S1, & 5S2 to the "ON" position to restore power to the control system.

Zone Thermostat Checkout (Honeywell T7067)

Available Only For 20 - 60 Ton Units

1. Open the system control switches 5S1 and 5S2 to disable the Evaporator Fan and Heating system.
2. Close the main power disconnect switch and turn control circuit switch 1S2, in unit control panel, "ON".

⚠WARNING

High Voltage is Present at Terminal Block 1TB1 or Unit Disconnect Switch 1S1!

To prevent injury or death form electrocution, it is the responsibility of the technician to recognize this hazard and use extreme care when performing service procedures with the electrical power energized.

3. At the Zone Thermostat (6U37), use a digital voltmeter to verify that there is 20 volts DC power between thermostat Terminals 1 & 2. See illustration in Figure 29, p. 41 for terminal identification. Refer to Table 21, p. 77 for the thermostat "voltage output" ramps.
4. To check the "Cooling" output signal, place the voltmeter leads between thermostat Terminals 1 & 4. Refer to Figure 29, p. 41 and;
   a. move the cooling (blue) setpoint lever from right to left. As the cooling setpoint is lowered, the voltage signal should increase and the "Cooling" LED brighten.
   b. move the cooling (blue) setpoint lever from left to right. As the cooling setpoint rises, the voltage signal should decrease and the "Cooling" LED dim.
5. To check the "Heating" output signal, place the voltmeter leads between thermostat Terminals 1 & 5. Refer to Figure 29, p. 41 and;
   a. move the heating (red) setpoint lever from left to right. As the heating setpoint rises, the voltage signal should increase and the "Heating" LED brighten.
   b. move the heating (red) setpoint lever form right to left. As the heating setpoint lowers, the voltage signal should decrease and the "Heating" LED dim.

Table 21. Zone thermostat (6U37) "voltage output" ramps

1U11 Function	Nominal Operating Points and Throttling Ranges: Pull-In Voltage[1] (VDC)	Drop-Out Voltage[(a)] (VDC)	Throttling Range	Measured between these 1U11 Terminals
HEAT 1(a)	4.63	4.0		Terminal 5 (heating) & Terminal 1 (common)
HEAT 2(a)	5.88	5.25		
HEAT 3(a)	7.13	6.50		
HEAT 4(a)	8.38	7.75		
COOL 1	4.58 - 5.42	3.44 - 4.56		Terminal 4 (cooling) & Terminal 1 (common)
COOL 2	5.43 - 6.34	4.69 - 5.81		
COOL 3	6.63 - 7.63	5.90 - 7.10		
COOL 4	7.84 - 8.92	7.11 - 8.39		
Economizer			2.75 - 4.00	

(a) "Pull-In" and "Drop-Out" values are ± 0.25 VDC

Discharge Air Sensor Checkout (Honeywell 6RT1)

Available Only For 20 - 60 Ton Units

⚠WARNING

Hazardous Voltage!

Disconnect all electric power, including remote disconnects before servicing. Follow proper lockout/tagout procedures to ensure the power cannot be inadvertently energized. Failure to disconnect power before servicing could result in death or serious injury.

1. Turn the control circuit switch 1S2, in the unit control panel, to the "OFF" position.
2. At the Master Energy Controller, disconnect wire connected to Terminal T1. Use a digital ohmmeter to measure resistance between Terminal T and the wire removed from Terminal T1.
3. Use chart in Figure 55, p. 74 to convert the measured resistance to an equivalent temperature.
4. Measure the actual temperature at the sensor location. If the measured resistance in step 2 is not within ± 10.0 ohms of the actual temperature, the 6RT1 is out of range; replace it.

Note: *Before condemning the sensor, verify that the connecting cable resistance is not excessive. Refer to the "Field Installed Control Wiring" section.*

5. Make all necessary repairs and reconnect the duct sensor lead to terminal T1 on the controller.
6. Turn switches 1S2, 5S1, & 5S2 to the "ON" position to restore power to the control system.

Figure 57. 6RT1 discharge duct sensor "temperature vs resistance" curve

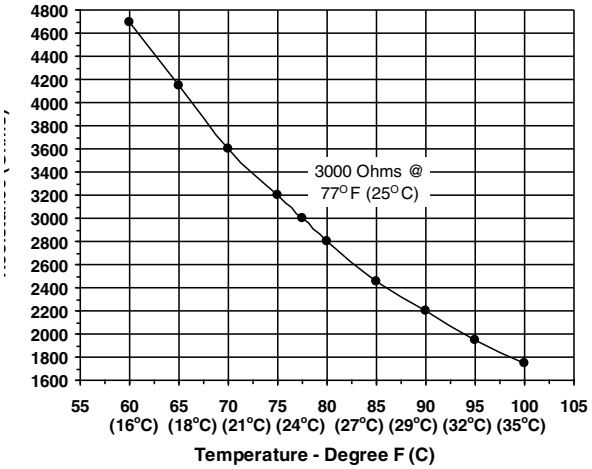

Figure 58. W973 master energy controller (MEC)

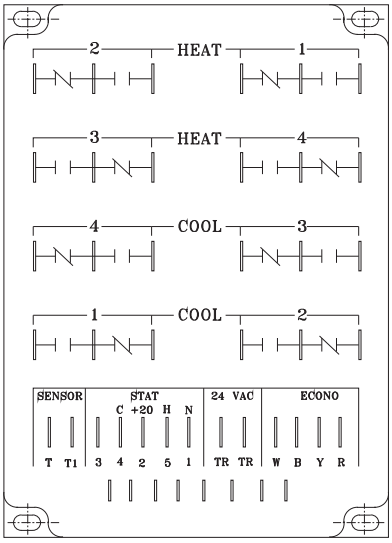

Voltage Imbalance

Excessive three phase voltage imbalance between phases will cause motors to overheat and eventually fail. The maximum allowable voltage imbalance is 2%. Measure and record the voltage between phases 1, 2, and 3 and calculate the amount of imbalance as follows:

% Voltage Imbalance = 100 x [(AV - VD)/(AV)] where:

- AV (Average Voltage) = (Volt 1 + Volt 2 + Volt 3)/3
- V1, V2, V3 = Line Voltage Readings
- VD = Line Voltage reading that deviates the farthest from the average voltage.

Example: If voltage readings of supply power measured 221, 230, and 227, average volts would be:

- (221 + 230 + 227)/3 = 226 Avg.

- VD (reading farthest from average) = 221

The percentage of Imbalance equals:

- 100 x[(226 - 221)/226)] = 2.2%

The 2.2% imbalance in this example exceeds the maximum allowable imbalance of 2.0%. This much imbalance between phases can equal as much as a 20% current imbalance with a resulting increase in motor winding temperatures that will decrease motor life. If the voltage imbalance is over 2%, notify the proper agencies to correct the voltage problem before operating this equipment.

Electrical Phasing

⚠WARNING

Hazardous Voltage!

Disconnect all electric power, including remote disconnects before servicing. Follow proper lockout/tagout procedures to ensure the power cannot be inadvertently energized. Failure to disconnect power before servicing could result in death or serious injury.

⚠WARNING

High Voltage is Present at Terminal Block 1TB1 or Unit Disconnect Switch 1S1!

To prevent injury or death form electrocution, it is the responsibility of the technician to recognize this hazard and use extreme care when performing service procedures with the electrical power energized.

Proper electrical phasing can be quickly determined and corrected before starting unit by using an instrument such as Associated Research Model 45 Phase Sequence Indicator, following steps below

- Turn field supplied disconnect switch that provides power to terminal block 1TB1 to “Off” position
- Verify that the 115 volt control switch (1S2) in the unit control box is in the "Off" position.
- Connect the phase sequence indicator leads to the terminal block or to the “Line” side of the optional factory mounted disconnect switch as follows:
  - Black (phase A) to L1
  - Red (phase B) to L2
  - Yellow (phase C) to L3
- Close the main power disconnect switch or circuit protector switch that provides the supply power to the condensing unit.
- Observe the ABC and CBA phase indicator lights on the face of the sequencer. The ABC indicator light will glow if the phase is ABC. If the CBA indicator light glows, open the disconnect switch or circuit protection switch and reverse any two power wires.
- Restore the main electrical power and recheck the phasing. If the phasing is correct.
- Open the main power disconnect switch or circuit protection switch and remove the phase sequence indicator.

Operating Principals

VAV W7100A Discharge Air Controller (7U11)

The discharge air controller used in Variable Air Volume applications is a Honeywell W7100A. This microprocessor controller is designed to maintain an average discharge air (D/A) temperature by:

1. monitoring the discharge air temperature sensor; and
2. modulating economizer dampers and sequencing stages of mechanical cooling "On" or "Off", as required.

The W7100A receives analog input from the discharge air sensor mounted in the supply duct every 2 to 3 seconds by pulsing DC current across the sensor, then "reading" the voltage potential across this thermistor.

If the comparison between the setpoint and the actual discharge air temperature indicates that cooling is required, the W7100A attempts to satisfy the load by modulating the economizer open (if applicable).

Economizer Cycle

The economizer is only allowed to function if the ambient conditions are below the setpoint of the enthalpy switch.

If the ambient air conditions are above the enthalpy setpoint, the W7100A will open the Fresh Air dampers to the minimum setpoint position.

To take full advantage of the "free cooling" provided by the economizer, the W7100A "resets" the discharge air setpoint. The amount of "reset" between the actual discharge air setpoint and the economizer control point is equal to 1/2 of the W7100's control band setpoint.

Example: With a typical control band setting of 6°F, the amount of discharge air "reset" is 3°F (1/2 of the control band setpoint). Therefore, if the discharge air setpoint is 55°F, the economizer control point is 52°F (i.e., 55°F - 3°F).

A second economizer "algorithm" within the W7100A is the response time of the controller. The greater the amount of deviation between the discharge air temperature and the economizer control point, i.e., as the temperature strays further from the control point, the response time becomes faster; and, as the discharge air temperature approaches the control point, the response time becomes slower.

When the discharge air temperature is within the "Deadband" (± 1.5°F of the economizer control point); the W7100A maintains the economizer's present position.

When the economizer cannot handle the cooling requirement or when the outdoor ambient conditions are unsuitable for "economizing", the W7100A activates the unit's mechanical cooling section.

Note: *As long as ambient conditions are suitable for economizing, the economizer works in conjunction with the mechanical cooling operation.*

The control algorithm used by the W7100A to add stages of cooling is illustrated in Figure 59, p. 79. When the discharge air temperature drifts above the setpoint, "Region 1", a stage of mechanical cooling is added based on time and the amount of deviation from setpoint. If the discharge air temperature remains above the setpoint, the W7100A energizes additional stages of mechanical cooling.

If the operating cooling stage is capable of satisfying the cooling requirement, as the discharge air temperature falls below the setpoint for a sufficient period of time, the W7100A turns the stages of mechanical cooling "Off", "Region 3".

The W7100A determines the length of the time before stages of mechanical cooling are turned "On" and "Off". When the system is operating within the control band, the delay is longest at setpoint, and decreases to a minimum of 4 minutes when the discharge air temperature exceeds the upper or lower limit of the control band. Refer to the illustration in Figure 59.

Figure 59. W7100A staging sequence

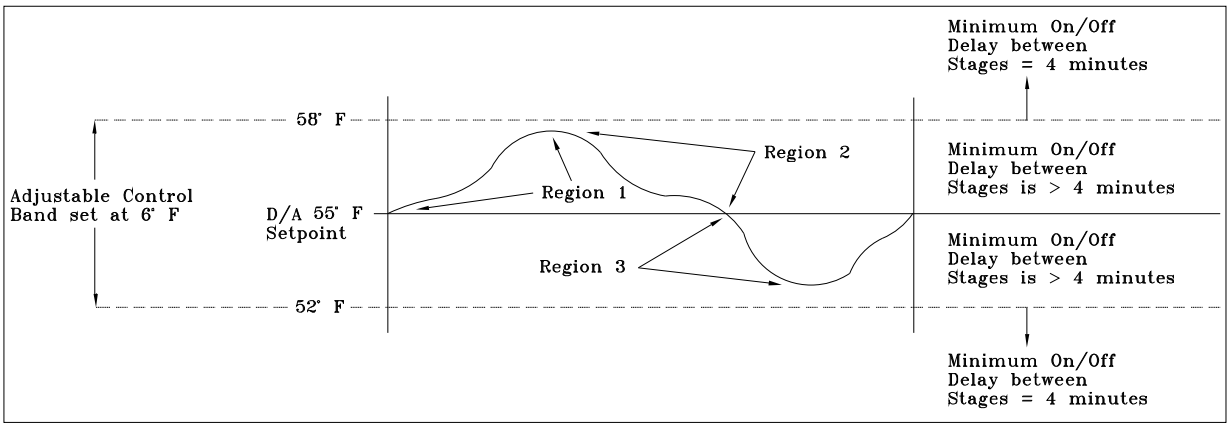

Chilled Water Temperature Controller (6U11)

The chilled water temperature controller used with EVP chiller applications is a Honeywell W7100G. This microprocessor controller is designed to maintain an average leaving water temperature using an integrating control band concept that matches the required operating capacity to the chiller load. The integral action, unlike "proportional only" type controllers, minimizes the amount of offset from the control setpoint.

The control band setting is centered on the leaving water setpoint. It is adjustable from 0°F to 10°F [0°C to 6°C] and is used to stabilize system operation. The control algorithm used by the W7100G to add stages of cooling is illustrated in Figure 74. As the water temperature rises above the upper control band limit, a stage of mechanical cooling is added, provided the minimum "Off" time has been satisfied (Point A). The minimum "fast response" time and the time delay between staging for the W7100G is set for 60 seconds.

If the water temperature remains above the upper control band limit (Point B), the next available stage of cooling will be energized when the minimum time delay between stages has elapsed. As the water temperature decreases below the lower control band, the last stage that was turned "On" will be cycled "Off" (Point C) when the minimum "On" time for that stage has elapsed. As the load on the water increases due to cooling stages being cycled "Off", the controller will maintain its current position, i.e., no staging of cooling "On" or "Off", as long as the temperature remains inside the control band. When the temperature increases above the upper control band limit (Point D), mechanical cooling stages will be sequenced "On" in the same manner as before. As a rule, any time the water temperature is above the upper control band limit, a stage of cooling will be "added" and anytime the water temperature decreases below the lower control band limit, a stage of cooling will be "Subtracted"

Figure 60. W7100G staging sequence

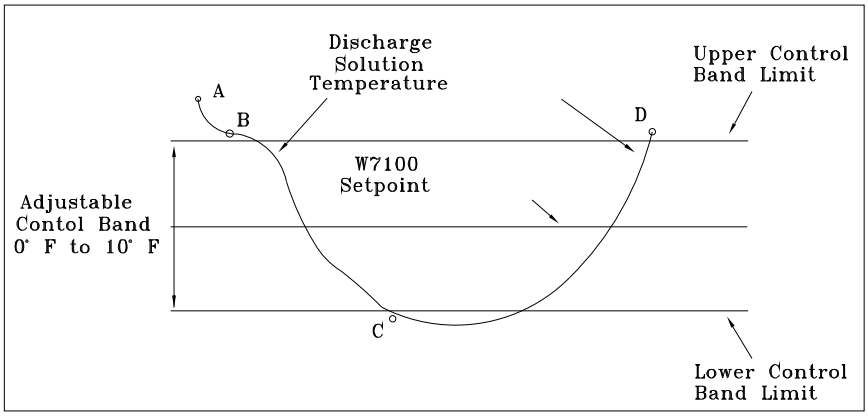

Thermostatic Expansion Valve

The reliability and performance of the refrigeration system is heavily dependent upon proper expansion valve adjustment. Therefore, the importance of maintaining the proper superheat cannot be over emphasized. See Table 22, p. 85 for proper superheat adjustment. Accurate measurements of superheat will provide the following information.

1. Effectiveness of expansion valve control of refrigerant flow.
2. Efficiency of the evaporator coil.
3. Amount of protection compressor is receiving against flooding or overheating.

The expected range for superheat is 14-18°F at full load conditions. At part load, expect a properly adjusted expansion valve to control to 8-12°F superheat. Systems operating with lower superheat could cause serious compressor damage due to refrigerant floodback.

The outdoor ambient temperature must be between 65°F and 105°F and the relative humidity of the air entering the evaporator must be above 40 percent. When the temperatures are outside of these ranges, measuring the operating pressures can be meaningless.

Condenser Fans

Condenser fan cycling is accomplished through interlocking fan contactors with a combination of compressor contactors and pressure switches (4S7 & 4S8). When the low ambient damper option is applied, ambient thermostats (1S36 & 1S37) are used to provide additional fan cycling control. Figure 61 and Figure 62 illustrate the condenser fan locations with their respective fan and relay designation.

When a cooling command has been initiated (first step), the first compressor for circuit one is energized, an auxiliary contactor on the compressor contactor is closed energizing contactor 1K6 for fan 2B2 or 1K9 4B2 (80 - 120 Ton). When the liquid line pressure exceeds 255 psig the fan pressure switch (4S7 & 4S8) will close and energize contactor 1K5 (20 -60 Ton units) or 1K7 (80 - 120 Ton units). When the next cooling step is added, an additional fan contactor will be energized by the compressor contactor on 25 - 120 Ton units.

Figure 61. Condenser fan locations: 20-60

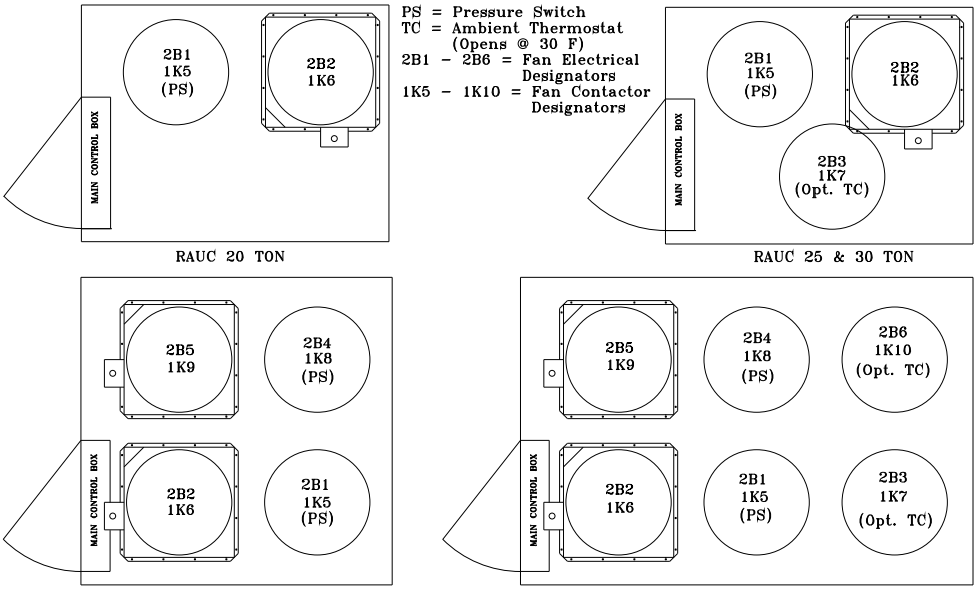

Figure 62. Condenser fan locations: 80-120

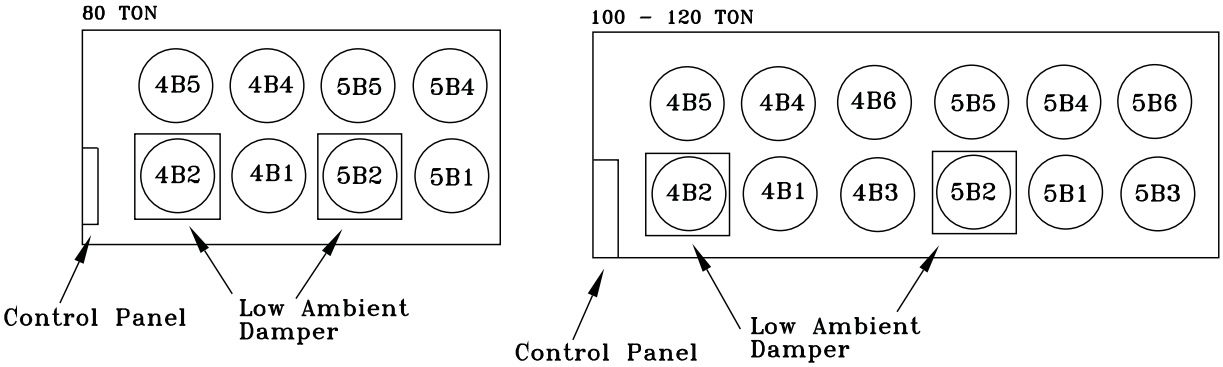

Low Ambient Dampers

Low Ambient Dampers are available as a factory installed option or can be field-installed. Dampers are used to extend the operation of these units from the standard operational temperatures to a minimum of 0°F without hot gas bypass or 10°F with hot gas bypass. (These values apply when wind speed across the condenser coil is less than 5 m.p.h.). If typical wind speeds are higher than 5 m.p.h., a wind screen around the unit may be required. By restricting the airflow across the condenser coils, saturated condensing temperatures can be maintained as the ambient temperatures change.

The low ambient damper actuator controls damper modulation for each refrigerant circuit in response to saturated condensing temperature.

Compressor Crankcase Heaters

Each compressor is equipped with a crankcase heater and is controlled by a 600 volt auxiliary switch on the compressor contactor. The proper operation of the crankcase heater is important to maintain an elevated compressor oil temperature during the “Off” cycle to prevent low oil viscosity and foaming during compressor starts.

When the compressor starts, the sudden reduction in crankcase pressure causes the liquid refrigerant to boil rapidly causing the oil to foam. This condition could damage compressor bearings due to reduced lubrication and could cause compressor mechanical failures.

When power has been “Off” for an extended period, allow the crankcase heater to operate a minimum of 24 hours before starting the unit.

Low Ambient Thermostats

In addition to the low ambient dampers on 25, 30, 50 & 60 Ton units, a low ambient thermostat is installed to further restrict the airflow across the condenser by cycling the 2B3 condenser fan on 25 & 30 Ton units plus 2B6 on 50 & 60 Ton units. The thermostat opens when the ambient temperature reaches 30°F and closes at approximately 33°F.

Hot Gas Bypass Operation

The HGBP valve regulates evaporator pressure by opening as suction pressure decreases, to maintain a desired minimum evaporating pressure regardless of a decrease in evaporator external loading.

When the evaporator (suction) pressure is above the valve’s setpoint, it remains closed. As suction pressure falls below the valve’s setpoint, the valve begins to open. The valve will continue to open at a rate proportional to the suction pressure drop, thus maintaining evaporator pressure.

Hot gas bypass valves are adjustable and should be set to begin opening at approximately 100 psig suction pressure and reach the full open position at 98 psig for DX coil applications.

Start-Up

Low Ambient Damper Adjustment (Factory or Field Installed)

When a unit is ordered with the low ambient option (i.e., Digit 11 is a "1" in the model number), a damper is factory installed over the lead condenser fan for each refrigeration circuit. See Figure 61, p. 81 or Figure 62, p. 81 for damper location illustrations for the appropriate unit.

For field installation, mount the dampers over the condenser fans at the locations shown in Figure 61, p. 81 or Figure 62, p. 81 and connect the actuator, controller, and sensor for each circuit. (Refer to the Installation Instructions provided with each low ambient damper kit.)

The controller has a factory default setpoint of 80° F. This setpoint can be adjusted by installing a field supplied resistor on 2TB34 in the low ambient control panel located in the back of the main control panel. (See the low ambient wiring diagram that shipped with the unit or with the field kit, for resistance values and installation location.)

⚠WARNING

Live Electrical Components!

During installation, testing, servicing and troubleshooting of this product, it may be necessary to work with live electrical components. Have a qualified licensed electrician or other individual who has been properly trained in handling live electrical components perform these tasks. Failure to follow all electrical safety precautions when exposed to live electrical components could result in death or serious injury.

Inspect the damper blades for proper alignment and operation. Dampers should be in the closed position during the "Off" cycle.

NOTICE:

Actuator Damage!

To prevent damage, do not depress actuator clutch while actuator is energized.

If adjustment is required:

1. Remove the sensor leads from the input terminals 6 and 7 for circuit #1 and/or 11 and 12 for circuit #2. (Controller output signal will go to 0.0 VDC and the damper will drive to the closed position.)
2. Loosen the actuator clamp.
3. Firmly hold the damper blades in the closed position
4. Retighten the actuator clamp.

To check damper operation, jumper between the sensor input terminals 6 and 7 and/or 11 and 12 (if applicable). Controller output signal will go to 10 VDC and damper will drive to full open position.

EVP Chiller Applications

Start the chilled water circulating pump by closing the field provided pump disconnect switch and turn the pump control circuit switch 5S1 "On".

Check the flow device to ensure it opens at minimum flow and closes properly.

With water circulating through the system, check the EVP chiller pressure drop and adjust the flow (if necessary). Refer to the appropriate EVP chiller size in for the operating pressure drop.

Freezestat Setting

At the remote panel, set the freezestat at a minimum of 5°F above the chilled water freezing temperature.

"Air Over" Evaporator Application

⚠WARNING

Hazardous Voltage!

Disconnect all electric power, including remote disconnects before servicing. Follow proper lockout/tagout procedures to ensure the power cannot be inadvertently energized. Failure to disconnect power before servicing could result in death or serious injury.

Verifying Proper Supply Fan Rotation

1. Verify the main power disconnect switch is off.
2. Unplug 1K21 & 1K22 reset relays from sockets in the unit main control box to prevent inadvertent compressor starts.
3. Ensure that the "System" selection switch at the remote panel is in the "Off" position and the "Fan" selection switch for the appropriate controls application is in the "Auto" position. (VAV units do not utilize a "Fan" selection input.)

⚠WARNING

Live Electrical Components!

During installation, testing, servicing and troubleshooting of this product, it may be necessary to work with live electrical components. Have a qualified licensed electrician or other individual who has been properly trained in handling live electrical components perform these tasks. Failure to follow all electrical safety precautions when exposed to live electrical components could result in death or serious injury.

4. Turn the 115 volt control circuit switch 1S2 to the "On" position.

5. Turn the main power disconnect switch or circuit protector switch for the unit to the “On” position.

⚠WARNING

Rotating Components!

During installation, testing, servicing and troubleshooting of this product it may be necessary to work with live and exposed rotating components. Have a qualified or licensed service individual who has been properly trained in handling exposed rotating components, perform these tasks. Failure to follow all safety precautions could result in rotating components cutting and slashing technician which could result in death or serious injury.

6. Turn the field provided disconnect switch for the supply fan to the “On” position and “bump” the field supplied control circuit switch “On”, (i.e., “On” then immediately “Off”).
7. If the fan does not start in applications where the fan control circuit is energized via terminal 7TB5-1 in the RAUJ 115V control circuit, the field power wiring to the RAUJ unit could be improperly phased. Phase protection module (1U3) located in the RAUJ control box interrupts control circuit power when improperly phased field power is detected.
8. While the fan is coasting down, check the rotation. If the fan is rotating backwards, turn the field provided disconnect switch for the air handler to the “Off” position and interchange any two of the main power wires at the fan motor starter or contactor.
9. After all adjustments have been made, restart the supply fan and proceed through the following procedures.

System Airflow Measurement

Much of the systems performance and reliability is closely associated with, and dependent upon having the proper airflow supplied both to the space that is being conditioned and across the evaporator coil.

With the supply fan rotating in the proper direction, measure the amperage at the supply fan contactor. If the amperage exceeds the motor nameplate value, the static pressure is less than design and the airflow is too high. If the amperage is below the motor nameplate value, static pressure could be too high and CFM could be too low. To determine the actual CFM (± 5%);

a. Measure the actual fan RPM
b. Calculate the Theoretical BHP
   i. (Actual Motor Amps X Motor HP)/Motor Nameplate Amps
c. Plot this data onto the appropriate Fan Performance Curve or Performance Table that shipped with the Air Handling equipment. Where the two points intersect, read the CFM line.

Use this data to assist in calculating a new fan drive if the CFM is not at design specifications.

An alternate method with less accuracy is to measure the static pressure drop across the evaporator coil. This can be accomplished by;

1. Drilling a small hole through the unit casing on each side of the coil.

NOTICE:

Coil Damage!

Coil damage can occur if care is not taken when drilling holes in this area.

2. Measure the difference between the pressures at both locations.
3. Plot this value onto the appropriate component pressure drop curve that shipped with the Air Handling equipment. Use the data to assist in calculating a new fan drive if the CFM is not at design specifications.
4. Plug the holes after the proper CFM has been established.

After all adjustments have been made, proceed through the following procedures.

Preliminary Expansion Valve Adjustment

NOTICE:

Compressor Damage!

Increase thermal expansion valve superheat settings before starting compressors to minimize compressor operation with low oil viscosity. Failure to follow the above could result in compressor failure or reduced compressor life.

No bleed thermal expansion valves are set by manufacturers to control between 12-14.4°F superheat leaving the evaporator at nominal design conditions. Thermal expansion valves with bleeds are set to their highest superheat setting. Actual superheat depends on many factors (valve vs. system relative sizing, operating conditions, system load step, system charge, piping, and condenser fan control). The thermal expansion valves must be adjusted as part of the unit start-up procedure. Do not adjust valves beyond manufacturer's available nominal adjustment range.

Table 22. Thermal expansion valve manufacturer settings - no bleed[a]

Sporlan

Standard off the shelf nominal valve settings (90 PSIG air test setting)

Valve	Superheat, °F	CW turns available	CCW turns available	Superheat change per turn	Field adjust for 18°F (DX evap coil)	Field adjust for 15°F (EVP only)
BBIZE-1-GA	12	4.5	4.5	2.4°F	2.5 CW	—
BBIZE-1-1/2-GA						
BBIZE-2-GA						
BBIZE-3-GA						
BBIZE-4-GA						
BBIZE-5-GA						
BBIZE-6-GA						
BBIZE-8-GA						
BBIZE-12.5-GA						
BBIZE-15-GA						
OZE-20-GA				3.4°F	.25 CW	.25 CW
OZE-25-GA						
OZE-35-GA						
OZE-50-GA		7.5		1.8°F	3.25 CW	1.75 CW
OZE-60-GA						

Emerson

Standard off the shelf nominal valve settings

Valve	Nom Tons	Superheat, °F	CW turns available	CCW turns available	Superheat change per turn	Field adjust for 18°F (DX evap coil)	Field adjust for 15°F (EVP only)
C	1-1/2 to 7	13	6	6	4	1.25 CW	
TF	12 to 20		5	5	2	2.5 CW	1.0 CW

Danfoss

Standard off the shelf nominal valve settings

Valve	Body size	SHT, °F	CW turns available	CCW turns available	Superheat change per turn	Field adjust for 18°F (DX evap coil)	Field adjust for 15°F (EVP only)
TGEL 3.5 TR	TGE 10	14.4	4	3	4.5°F	.75 CW	—
TGEL 4.5 TR							
TGEL 6.5 TR							
TGEL 9 TR							
TGEL 13 TR							
TGEL 15 TR	TGE 20		7		3	1.25 CW	.25 CW
TGEL 19 TR							
TGEL 23 TR							
TGEL 31 TR	TGE 40			4			
TGEL 35 TR							
TGEL 46 TR							

(a) Valve part numbers with "-ZGA" in place of "-GA", may be used interchangeably. "ERZE-" part number valves are an acceptable alternate to "BBIZE" valves.

Information in Table 22, p. 85 is approximate and intended to simplify field adjustment by presetting valves to approximately 18°F superheat for DX evap coils and 15°F superheat for EVP chillers. Actual operating superheat will typically be less than 18°/15°F and varies depending on many factors including those listed above. Superheat gradient (superheat change per turn) is also approximate and will not be constant throughout the valve adjustment range. Check superheat after startup to confirm proper control.

Tag or mark valve to keep a record of any field adjustments.

Adding Preliminary Charge

1. Leak check must be completed and system evacuated.
2. Verify that oil levels are near or above the top of all compressor sight glasses.

⚠WARNING

Hazardous Voltage!

Disconnect all electric power, including remote disconnects before servicing. Follow proper lockout/tagout procedures to ensure the power cannot be inadvertently energized. Failure to disconnect power before servicing could result in death or serious injury.

3. Insure field supplied unit disconnect is "OFF". Then verify that the unit 1S2 115 volt control circuit switch is "OFF" and that reset relays 1K21 & 1K22 have been unplugged to prevent inadvertent compressor starts.
4. Turn field supplied unit disconnect "ON" to energize crankcase heaters. Verify crankcase heaters are operating.
5. Verify that discharge, suction, and liquid line service valves are open. Liquid line service valve must be closed 1/4" turn from full open to allow for fan pressure switch operation.
6. If system is equipped with hot gas bypass, insure hot gas bypass is closed and remains closed during charging.
7. Refer to Table 24, p. 91 for the charge estimate for the condensing unit circuit and piping at the appropriate piping length.
8. At the liquid line angle valve add as much R-410A LIQUID as possible up to, but not exceeding, that listed in Table 24, p. 91. Depending on conditions, it could not be possible to add more than 60% of the charge listed in Table 24, p. 91. This will be adequate for compressor startup. More charge will be added after compressors are started. Use an accurate scale to measure and record the preliminary amount of R-410A added to each circuit.
9. Do not add refrigerant in the suction line at this time to prevent excessive refrigerant in the low side prior to compressor startup.

Compressor Start-Up (All Systems)

1. Review the proceeding "Adding Preliminary Charge" section and confirm all steps were completed.

NOTICE:

Compressor Damage!

Do not allow liquid refrigerant to enter the suction line. Excessive liquid accumulation in the suction line could result in compressor bearing damage. Keep crankcase heaters on whenever refrigerant is in the system. If crankcase heaters have not been on with refrigerant in the system, turn the crankcase heaters on for a minimum of 24 hours before starting compressors. Failure to follow the above could result in compressor failure or reduced compressor life.

2. Initial compressor start-up is best done above 70°F outdoor temperature with ample evaporator load (at least 70°F return air and 350 CFM/Ton).

   Table 25, p. 91 gives the minimum starting temperatures for both "Standard" & "Low" Ambient units.

   Do not attempt to charge the system with the low ambient dampers and/or hot gas bypass operating (if applicable). Disable low ambient dampers in the "Open" position (refer to the "Low Ambient Damper Adjustment" section) and verify hot gas bypass is not operating before proceeding.
3. On units with dual circuits, work on only one circuit at a time. Refer to Table 26, p. 91 for the compressor sequencing and Figure 64, p. 92 or Figure 65, p. 92 for their location.
4. Compare the amount of preliminary charge added in the proceeding section to the Table 24, p. 91 estimates for condensing unit and piping only. Up to 20% more charge than listed in Table 24, p. 91 may be required to fully charge the circuit, depending on the evaporator design. Have adequate R-410A available to complete charging as described in the following steps.
5. Attach a thermocouple type temperature sensor on the liquid line close to the liquid line service valve. To insure an accurate liquid temperature reading, clean the line where the sensor is attached. After securing the sensor to the line, insulate the sensor and line to isolate it from the ambient air.
6. Attach a set of service gauges onto the suction and discharge gauge ports.
7. Check the low side pressure. The low pressure cutout (4S3, 4S4) opens below 58 Psig and closes above 78 Psig. If the low side pressure is less than 78 Psig, refrigerant may need to be added to the suction line before starting the compressor(s). Slowly meter into the suction line only as much R410A as needed to make the low pressure cutout from the VAPOR charging connection. If possible, plan to use this entire refrigerant bottle on the same unit in order to minimize fractionalization. Use an accurate scale to measure and record the amount of R-410A added.

⚠WARNING

Hazardous Voltage!

Disconnect all electric power, including remote disconnects before servicing. Follow proper lockout/tagout procedures to ensure the power cannot be inadvertently energized. Failure to disconnect power before servicing could result in death or serious injury.

8. Switch the field supplied unit disconnect "OFF". Open the unit control box and plug in the reset relay (1K21 or 1K22) for the circuit being started only.
9. This charging procedure is more accurate at higher outdoor temperatures. If the outdoor temperature is less than 80°F, temporarily disable the fan pressure control switches (4S11, 4S12) or (4S7, 4S8) on 80 - 120 Ton units. To do this, refer to unit wiring diagrams and disconnect the wires between the switches and the terminal strip.
10. Then switch the RAUJ 115 volt (1S2) control circuit switch "ON". Close the control box and then switch the field supplied unit disconnect "ON". Unit power should be off no longer than 30 minutes to prevent refrigerant migration to compressor sumps. If power is off for longer than 30 minutes, allow time for crankcase heaters to drive refrigerant from compressor sumps before starting compressors.

NOTICE:

Compressor Damage!

Keep crankcase heaters on whenever refrigerant is in the system. If crankcase heaters have not been on with refrigerant in the system, turn the crankcase heaters on for a minimum of 24 hours before starting compressors. Failure to follow the above could result in compressor failure or reduced compressor life.

11. Verify that oil levels are near or above the top of all compressor sight glasses.
12. Start the first step compressor only.

⚠WARNING

Live Electrical Components!

During installation, testing, servicing and troubleshooting of this product, it may be necessary to work with live electrical components. Have a qualified licensed electrician or other individual who has been properly trained in handling live electrical components perform these tasks. Failure to follow all electrical safety precautions when exposed to live electrical components could result in death or serious injury.

NOTICE:

Compressor Damage!

Improper power phasing will cause compressor to run backwards. Compressor could be running backwards if it is noisy, low side shell gets hot, suction pressure does not drop within 5 seconds after startup, and compressor only draws ½ expected amps. Stop the compressor immediately and have a qualified electrician or technician properly trained in 3 phase power correct the wiring. Failure to do the above could result in compressor damage.

a. If the compressor and condenser fans do not start, the field power wiring to the RAUJ unit could be improperly phased. A main unit power phase protection module (1U3) is located in the RAUJ control box and interrupts control circuit power when improperly phased field power is detected.
   i. CSHD compressors (used in 20-60T units) are not equipped with electronic modules and do not have individual compressor phase protection.
   ii. CSHN compressors (used in 80-120T units) are individually equipped with compressor protection modules (381U1, 382U2, 383U3, 384U4, 385U5, 386U6) located in the compressor junction boxes. These modules include phase, voltage, overcurrent, and over temperature protection. If CSHN compressors are started with reversed phasing, the module output relay will open in about 6 seconds. Module output relays are wired in series with the unit 115 volt control circuit reset relays (1K21, 1K22). When any module output relay opens, the circuit reset relay latches closed and circuit operation is locked out. Note: Refer to the Service & Maintenance section of this manual or COM-SVN01A-EN for further discussion regarding other potential compressor protection module faults.

b. As soon as a compressor starts, verify correct rotation. If a scroll compressor is allowed to run backwards for even a very short period of time, internal compressor damage could occur and compressor life could be reduced. When rotating backwards scroll compressors make a loud noise, do not pump, draw about 1/2 expected amps, and the low side shell gets hot. Immediately shut off a compressor rotating backwards.

c. Check condenser fans for proper rotation. As viewed from the top of the unit, the correct rotation direction is clockwise. All Motors are Rotating Backwards.

⚠WARNING

Rotating Components!

During installation, testing, servicing and troubleshooting of this product it may be necessary to work with live and exposed rotating components. Have a qualified or licensed service individual who has been properly trained in handling exposed rotating components, perform these tasks. Failure to follow all safety precautions could result in rotating components cutting and slashing technician which could result in death or serious injury.

⚠WARNING

Hazardous Voltage!

Disconnect all electric power, including remote disconnects before servicing. Follow proper lockout/tagout procedures to ensure the power cannot be inadvertently energized. Failure to disconnect power before servicing could result in death or serious injury.

i. Turn the field supplied disconnect switch or circuit protector switch that provides power to the condensing unit to the “Off” position. Lock the disconnect switch in the open position while working at the unit.

ii. Verify that field connected main power phase sequence matches that specified on the unit wiring diagrams. Rotation will be incorrect if any two power wires are interchanged at the unit terminal block 1TB1 or the optional factory mounted non-fused disconnect switch (1S1) in the unit control panel.

iii. Check the unit phase module (1U1) for correct operation and unit wiring.

Note: *Interchanging "Load" side power wires at the contactors only affects the individual fan rotation. Ensure that the voltage phase sequence at the main terminal block 1TB1 is ABC as outlined in the "Electrical Phasing" section.*

Some Motors are Rotating Backwards

⚠WARNING

Hazardous Voltage!

Disconnect all electric power, including remote disconnects before servicing. Follow proper lockout/tagout procedures to ensure the power cannot be inadvertently energized. Failure to disconnect power before servicing could result in death or serious injury.

⚠WARNING

Rotating Components!

During installation, testing, servicing and troubleshooting of this product it may be necessary to work with live and exposed rotating components. Have a qualified or licensed service individual who has been properly trained in handling exposed rotating components, perform these tasks. Failure to follow all safety precautions could result in rotating components cutting and slashing technician which could result in death or serious injury.

iv. Turn the field supplied disconnect switch or circuit protector switch that provides power to the condensing unit to the "Off" position. Lock the disconnect switch in the open position while working at the unit.

v. If the unit main power phase sequence is correct, rotation of an individual motor will be backwards if any two leads are interchanged between the unit main power and the motor. Verify that wiring from the unit main power to the motor is per the unit wiring diagram. Refer to the illustration in Figure 63 for the compressor terminal/phase identification. Compressor damage could occur if a compressor runs backwards for a very short period of time.

d. Start the remaining circuit compressor(s). Verify correct rotation. Incorrect rotation is noisy, compressor draws about ½ expected amps, and the low side shell gets hot. Immediately shut off any compressors rotating backwards.

e. After allowing 10 minutes for circuit operation to stabilize at full load, check the liquid temperature and discharge pressure. Plot on Figure 63, p. 89. Expect the operating point to be in the "Add charge" portion of Figure 63, p. 89. The remainder of the circuit charge will be added in the following steps.

Figure 63. System charging chart (all units)

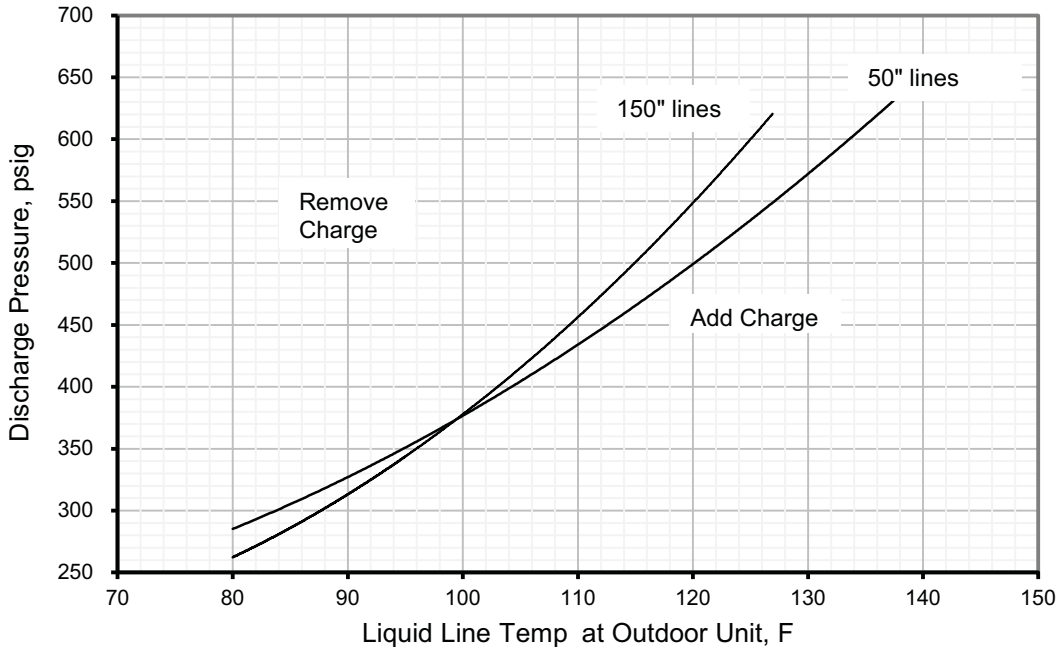

f. Subtract the total charge already added from the Table 24, p. 91 charge estimate for condensing unit at the appropriate piping length. Add no more R-410A than 1/2 of this difference at a time.

g. With all the circuit compressors operating, SLOWLY meter R-410A into the suction line from the LIQUID charging connection. Add no more than 1/2 of the difference from step f. above. Then allow the unit to run for 10 minutes, and plot the new operating point on Figure 63. Use an accurate scale to measure and record the amount of R-410A added.

NOTICE:

Compressor Damage!

To prevent compressor liquid slugging, only add liquid in the suction line when the compressor is running. Use extreme caution to meter liquid refrigerant into the suction line slowly. If liquid is added too rapidly, compressor oil dilution and oil pumpout could occur. Failure to follow the above could result in compressor failure or reduced compressor life.

h. Repeat step g., adding smaller increments of refrigerant until circuit operation is approximately on the appropriate line of Figure 63, p. 89. As the charging line is approached, smaller increments of refrigerant will move the operating point more.

i. This procedure results in less subcooling than previous split system charging methods. Note that using this charging method will at times result in bubbles at sight glasses installed just upstream of expansion valves; especially during lower ambient operation, part load, and for systems with evaporators located above condensing units. This charging procedure will maximize the usable operating envelope of the R-410A RAUJ units.

NOTICE:

Compressor Damage!

Do not overcharge system. Excessive refrigerant charging of the RAUJ unit can cause compressor liquid slugging at startup, and conditions where compressors and/or condenser fans short cycle. Failure to do the above could result in compressor failure and/or reduced compressor life.

Important: *Do not release refrigerant to the atmosphere! If adding or removing refrigerant is required, the service technician must comply with all Federal, State, and local laws. Refer to general service bulletin MSCU-SB-1 (latest edition).*

j. Record the total charge added to the circuit.

k. If applicable, repeat steps a. through j. on the 2nd refrigeration circuit.

⚠WARNING

Hazardous Voltage!

Disconnect all electric power, including remote disconnects before servicing. Follow proper lockout/tagout procedures to ensure the power cannot be inadvertently energized. Failure to disconnect power before servicing could result in death or serious injury.

l. If in step 9. the fan pressure control switches were disabled to allow for charging below 80°F outdoor temperature, disconnect unit power and reconnect the control wiring for these fans at this time. Follow the procedures discussed earlier to confirm proper rotation of these condenser fans.

13. After the unit has been operating for approximately 30 minutes at full load with all condenser fans running, record the operating pressures. Operating pressures should be within +/- 10 Psig of the appropriate pressure curve in Figure 63, p. 89. Measure and record the system subcooling and superheat as described in the following sections.

Subcooling

The outdoor ambient temperature must be between 65°F and 105°F and the relative humidity of the air entering the evaporator must be above 40 percent. When the temperatures are outside of these ranges, measuring the operating pressures can be meaningless.

With the unit operating at "Full Circuit Capacity", acceptable subcooling ranges between 8°F to 16°F.

Measuring Subcooling

Note: *System charging is done by using the charging chart on fig. 38 page 76. Do not attempt to charge the system based on subcooling.*

- At the liquid line service valve, measure the liquid line pressure. Using a Refrigerant 410A pressure/temperature chart, convert the pressure reading into the corresponding saturated temperature.
- Measure the actual liquid line temperature as close to the liquid line service valve as possible. To ensure an accurate reading, clean the line thoroughly where the temperature sensor will be attached. After securing the sensor to the line, insulate the sensor and line to isolate it from the ambient air.

Note: *Glass thermometers do not have sufficient contact area to give an accurate reading.*

- Determine the system subcooling by subtracting the actual liquid line temperature from the saturated liquid temperature.

Measuring Superheat

- Measure the suction pressure at the outlet of the evaporator as close to the expansion valve bulb location as possible.
- Measured the suction line temperature as close to the expansion valve bulb, as possible.
- Using a Refrigerant/Temperature chart, convert the pressure reading to a corresponding saturated vapor temperature.

Note: *On many Trane fan/coil units, an access valve is provided close to the expansion valve bulb location. This valve must be added on climate changers and other evaporators.*

- Subtract the saturated vapor temperature, from the actual suction line temperature. The difference between the two temperatures is known as "superheat".

14. Verify that the oil level in each compressor is correct. As a minimum, oil must be visible in the sight glass.
15. Once the checks and adjustments for the operating circuit has been completed, check and record the:
    - ambient temperature;
    - compressor oil level (each circuit);
    - compressor suction and discharge pressures and liquid line temperatures (each circuit);
    - superheat and subcooling (each circuit);

    Record this data on an "operator's maintenance log" shown in Table 28, p. 96. Repeat these procedures for the second refrigeration circuit, if applicable.
16. Turn the 115-volt control circuit switch 1S2 to the "OFF" position and open the field provided or optional factory mounted disconnect switch.
17. After shutting the system off, check the compressor oil appearance. Discoloration of the oil indicates that an abnormal condition has occurred. If the oil is dark and smells burnt, it has overheated because of: compressor is operating at extremely high condensing temperatures; high superheat; a compressor mechanical failure; or, occurrence of a motor burnout.

    If the oil is black and contains metal flakes, a mechanical failure has occurred. This symptom is often accompanied by a high compressor amperage draw.

    If a motor burnout is suspected, use an acid test kit to check the condition of the oil. Test results will indicate an acid level exceeding 0.05 mg KOH/g if a burnout occurred.

Compressor Oil

NOTICE:

Compressor Damage!

POE oil absorbs atmospheric moisture quickly which can lead to compressor damage. Always use the smallest container size required for the job requirements. Always leave the oil container tightly sealed until time of use. Do not reuse oil that has been opened.

RAUJ unit and replacement compressors ship fully charged with POE oil from the factory. The scroll compressor uses POE oil (OIL00079 for a quart container or OIL00080 for a gallon container) without substitution. The appropriate oil charge for a 7.5 Ton scroll compressor is 6.3 pints. For 9 through 15 Ton light commercial scroll compressors is 7 pints. For a 15 and 20 Ton large commercial scroll compressors (80-120T units), use 14.2 pints.

Compressor Crankcase Heaters

7.5 thru 15 Ton CSHD compressors use one 90-watt heater per compressor. 15 and 20 Ton CSHN compressors use one 160-watt heater per compressor.

Table 23. Pressure control switch settings

Pressure Switch	Make	Break
Hi Pressure	550 psi	650 psi
Lo Pressure	78 psi	58 psi
Condenser Fan Cycling switch	444 psi	255 psi
EVP Lo Pressure	105 psi	82 psi

Table 24. Approximate charge per circuit for condensing unit and lines only (does not include evaporator)

Total Interconnecting Line Length			
Capacity	50	100	150
20	19	25	32
25	25	37	50
30	25	38	50
40	25	37	50
50	25	38	50
60	24	36	48
80	49	69	88
100	52	73	94
120	55	76	98

Table 25. Minimum starting ambient temperature

	Minimum Starting Ambient[a]			
	Standard Units		Low Ambient Units	
Unit Size	With HGBP	No HGBP	With HGBP	No HGBP
20-60	45°	40°	10°	0°
80-120	45°	40°	10°	0°

(a) Minimum starting ambients in degrees F and is based on the unit operating at minimum step of unloading and 5 mph wind across condenser.

Table 26. Compressor sequence: 20-120 Ton units

Unit Size	Control Step	Circuit 1	Circuit 2	% Loaded Unit
20	1	1A		50
	2	1A,1B		100

Table 26. Compressor sequence: 20-120 Ton units

Unit Size	Control Step	Circuit 1	Circuit 2	% Loaded Unit
25	1	1A		42
	2	1A,1B		100
30	1	1A		50
	2	1A,1B		100
40	1	1A		25
	2	1A	2A	50
	3	1A,1B	2A	75
	4	1A,1B	2A,2B	100
50	1	1A		23
	2	1A	2A	46
	3	1A,1B	2A	73
	4	1A,1B	2A,2B	100
60	1	1A		25
	2	1A	2A	50
	3	1A,1B	2A	75
	4	1A,1B	2A,2B	100
80	1	1A		17
	2	1A	2A	33
	3	1A,1B	2A	50
	4	1A,1B	2A,2B	66
	5	1A,1B,1C	2A,2B	83
	6	1A,1B,1C	2A,2B,2C	100
100	1	1A		15
	2	1A	2A	30
	3	1A,1B	2A	45
	4	1A,1B	2A,2B	60
	5	1A,1B,1C	2A,2B	80
	6	1A,1B,1C	2A,2B,2C	100
120	1	1A		17
	2	1A	2A	33
	3	1A,1B	2A	50
	4	1A,1B	2A,2B	66
	5	1A,1B,1C	2A,2B	83
	6	1A,1B,1C	2A,2B,2C	100

Figure 64. Typical compressor locations 20 - 60 Ton units

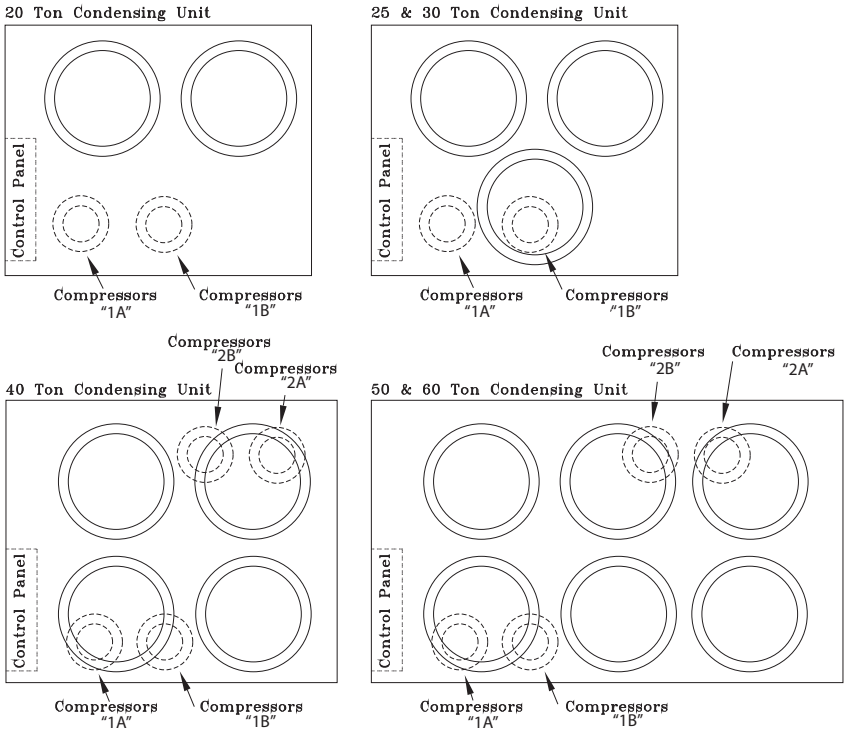

Figure 65. Typical compressor locations 80 - 120T units

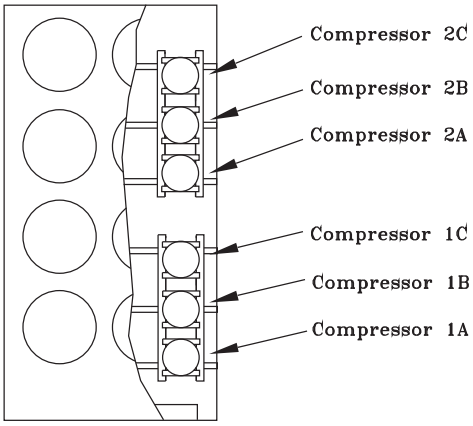

Pressure Curves

To Check Operating Pressures

1. Start the unit and allow the pressures to stabilize.
2. Measure the outdoor air dry bulb temperature (F) entering the condenser coil.
3. Measure the discharge and suction pressure (psig) next to the compressor.
4. Plot the outdoor dry bulb temperature and the operating suction pressure (psig) onto the chart.
5. At point of intersection, read to the left for discharge pressure. Measured discharge pressure should be within +/- 10 psig of graph.

.

Figure 66. 20 Ton cooling cycle pressure curve[a]

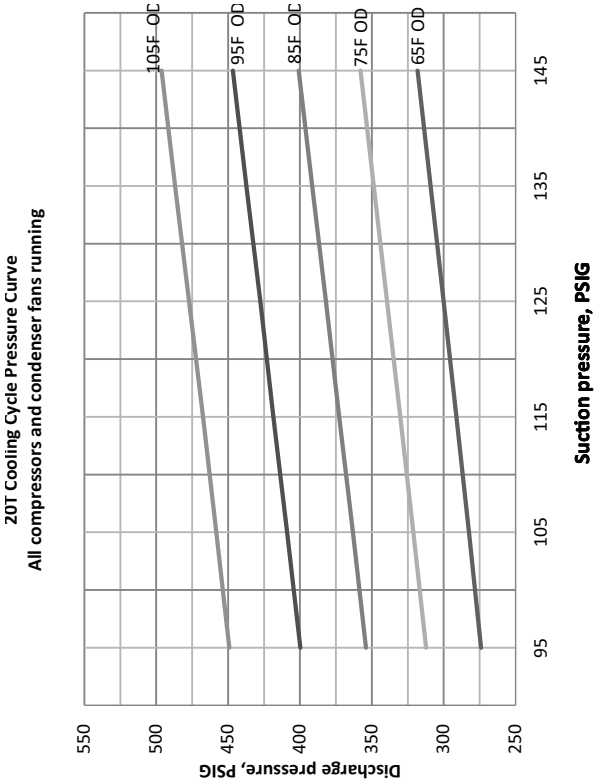

(a) All compressors and condenser fans running

Figure 67. 25 Ton cooling cycle pressure curve[a]

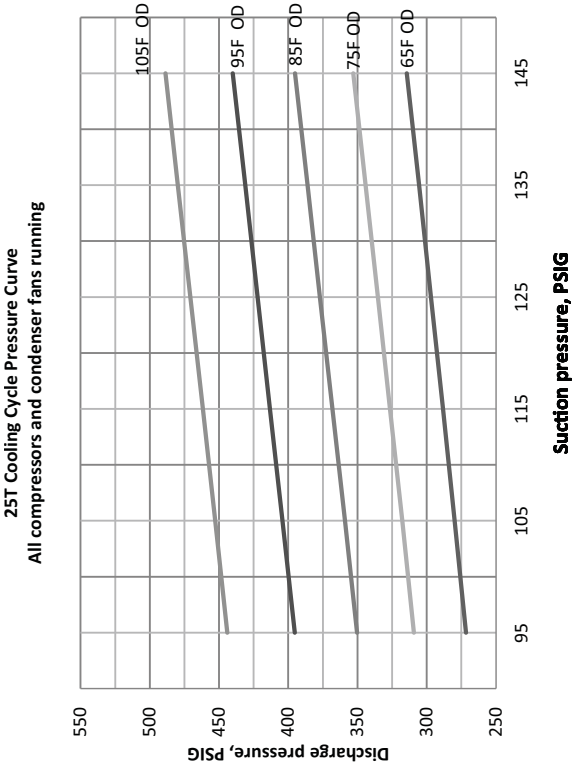

(a) All compressors and condenser fans running

Figure 68. 30 Ton cooling cycle pressure curve[a]

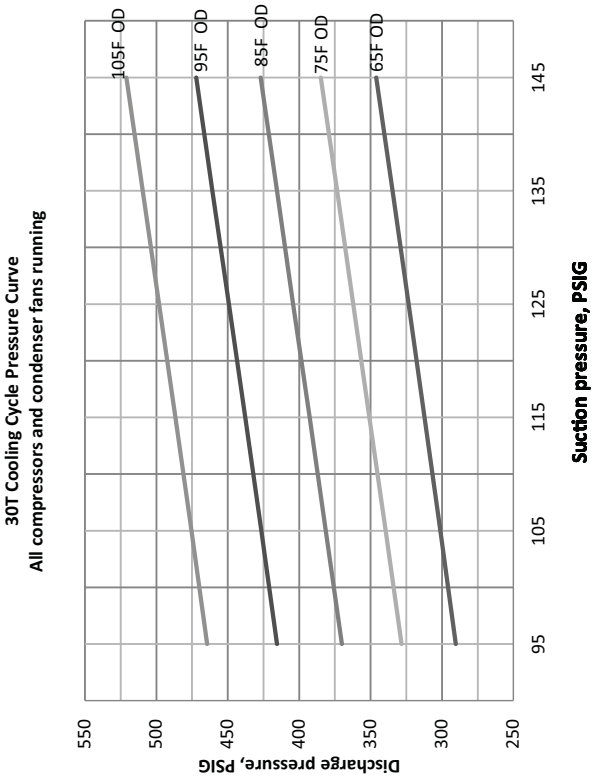

(a) All compressors and condenser fans running

Figure 69. 40 Ton cooling cycle pressure curve[a]

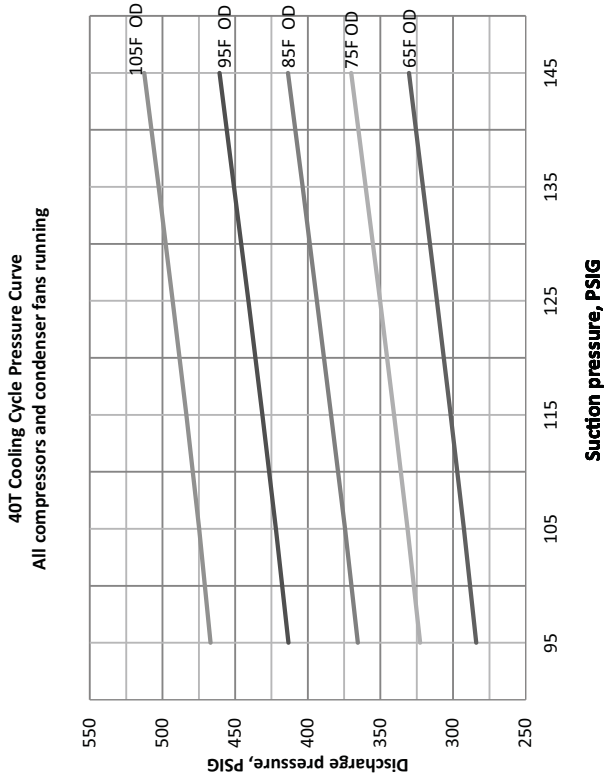

(a) All compressors and condenser fans running

Figure 70. 50 Ton cooling cycle pressure curve[a]

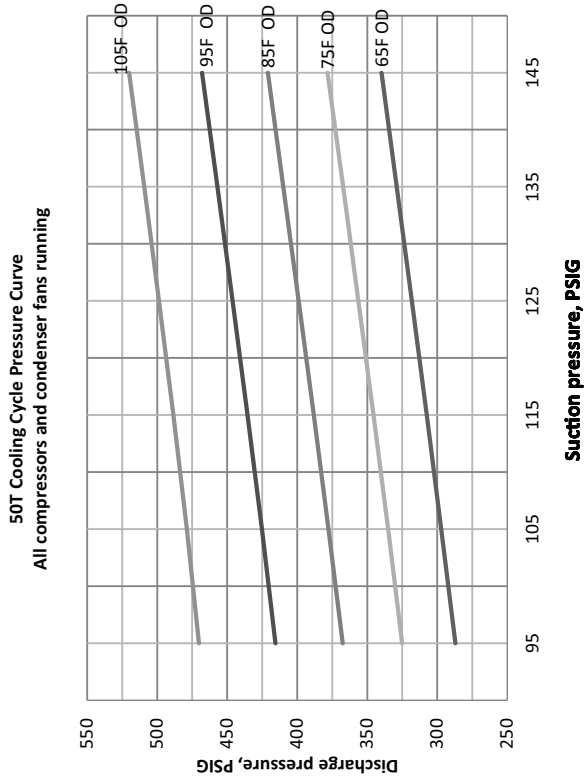

(a) All compressors and condenser fans running

Figure 71. 60 Ton cooling cycle pressure curve[a]

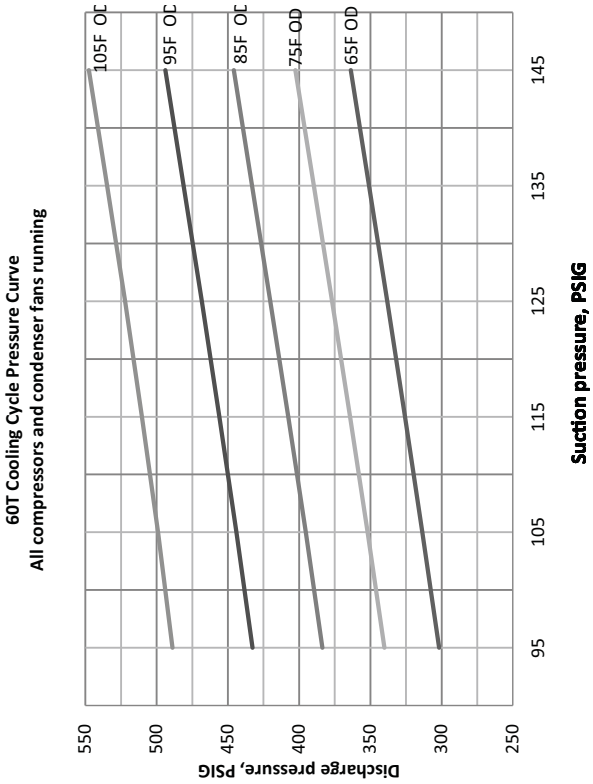

(a) All compressors and condenser fans running

Figure 72. 80 Ton cooling cycle pressure curve[a]

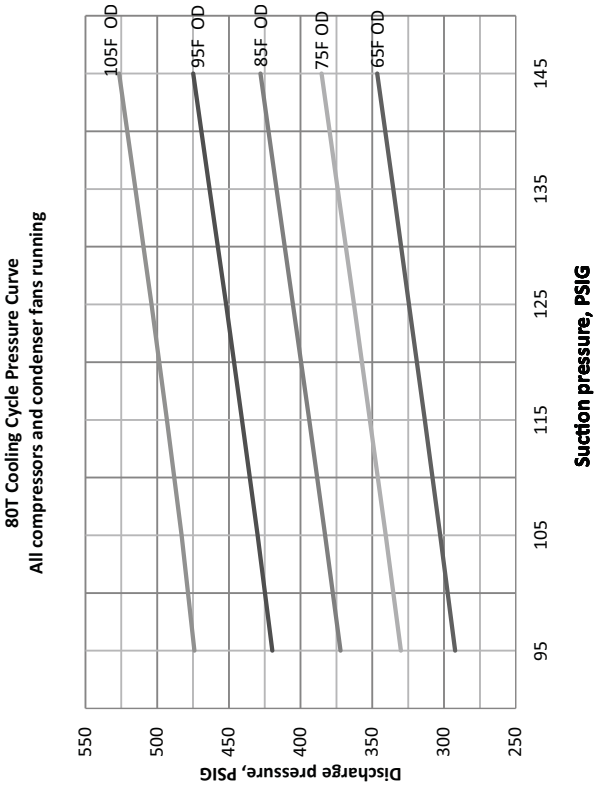

(a) All compressors and condenser fans running

Figure 73. 100 Ton cooling cycle pressure curve[a]

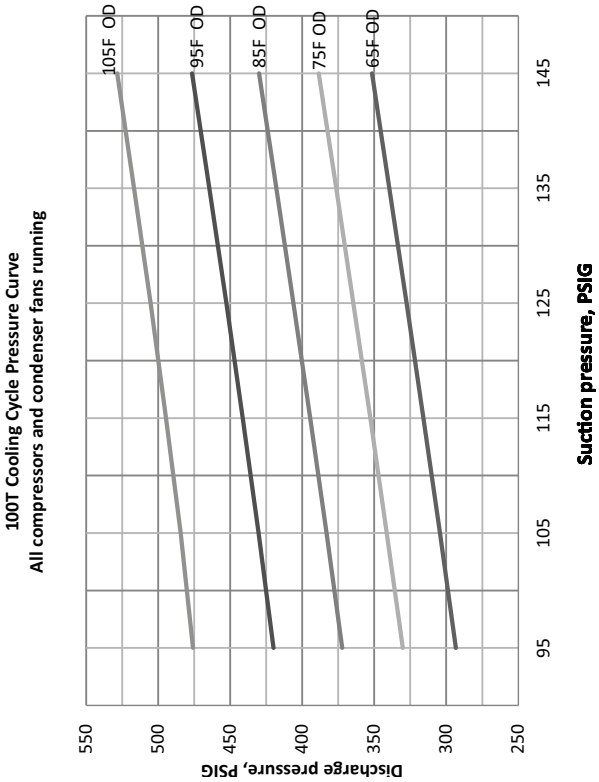

(a) All compressors and condenser fans running

Figure 74. 120 Ton cooling cycle pressure curve[a]

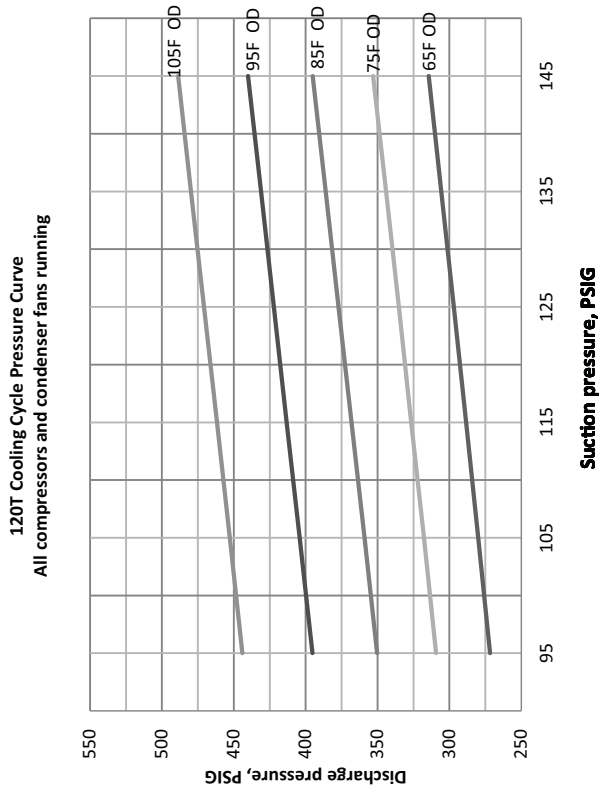

(a) All compressors and condenser fans running

Figure 75. Junction box: 20-60 Ton units

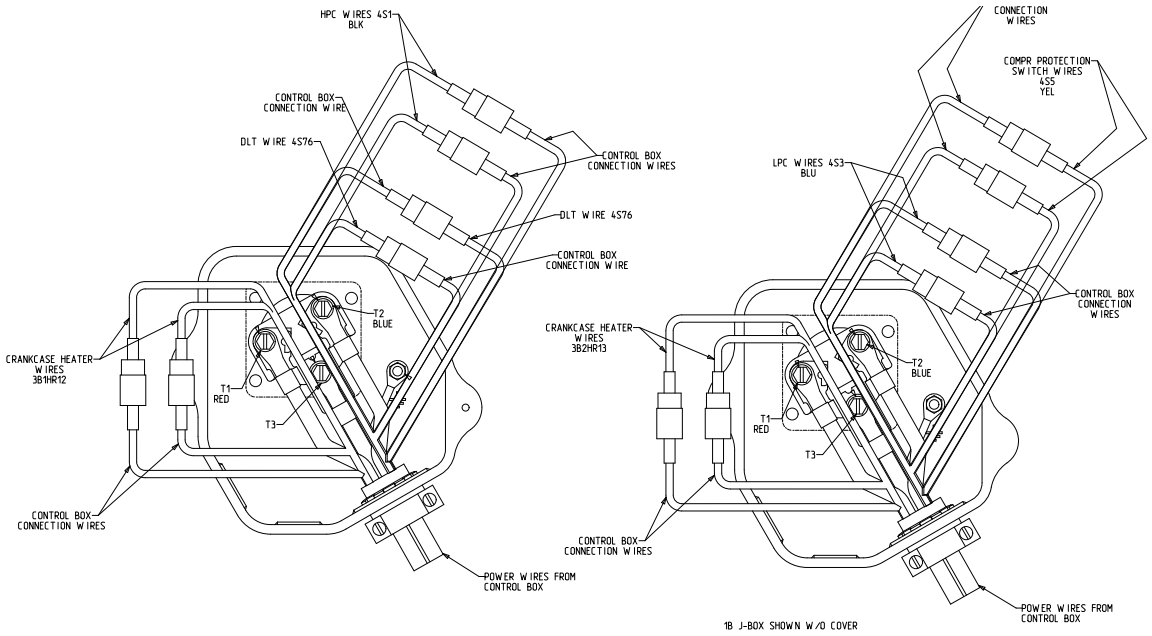

Figure 76. Junction box: 80-120 Ton units

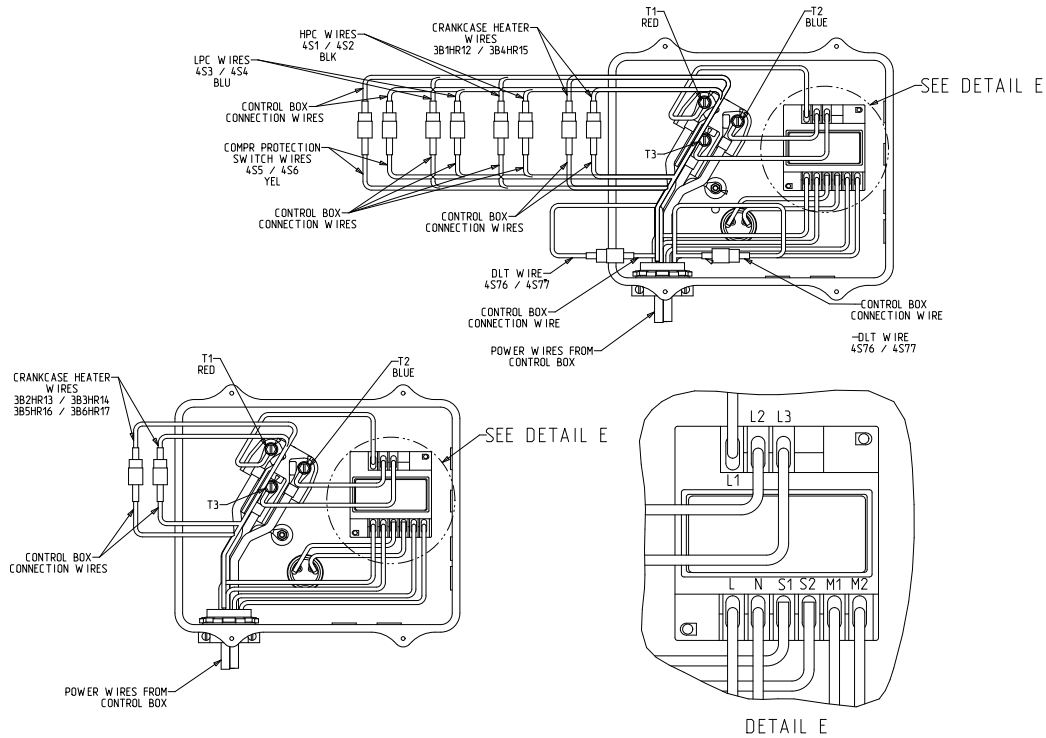

Final System Setup

After completing the Pre-start and Start-up procedures outlined in the previous sections, perform these final checks before leaving the unit:

⚠WARNING

Hazardous Voltage!

Disconnect all electric power, including remote disconnects before servicing. Follow proper lockout/tagout procedures to ensure the power cannot be inadvertently energized. Failure to disconnect power before servicing could result in death or serious injury.

- Turn the 115 volt control circuit switch 1S2 "Off" and program the Night Setback (NSB) panel (if applicable) for proper unoccupied operation. Refer to the programming instructions for the specific panel.
- Verify "System" selection switch and the "Fan Mode" selection switch at the Remote panel is set correctly.
- Verify that the "System" control switch for the supply fan is "On".
- Verify that the "System" control switch for the supply fan or the chilled water pump is "On."
- Set the correct "Operating Temperature" for the system at the system controller. Refer to Table 25, p. 91 for the recommended control set points for the appropriate control option.
- Turn the 115 volt control circuit switch 1S2 "On". The system will start automatically once a request for cooling has been given.
- Verify that all exterior panels and the control panel doors are secured in place.

Table 27. Recommended operating setpoints 20 - 120 Ton units

Control	Control Setting	Recommended Setting
Discharge Air Controller (VAV units only)	Supply Air Setpoint	Set at design discharge (supply) air temperature; minimum setting = 55° F
	Reset Setpoint	Set at maximum amount of allowable reset for supply air setpoint.
	Control Band	Set at 6° F Minimum Setpoint
Chiller Control (EVP units only) Freezestat	Leaving Fluid Setpoint	Set at design leaving chilled water temperature (typically) 44° F
	Reset Setpoint	Set at maximum amount of allowable reset for leaving fluid setpoint.
	Control Band	Set at 6° F Minimum Setpoint (minimum control temperature cannot be lower than freezestat setting)
Freezestat	Low Limit Solution Temperature	Set at 5° F Minimum above the Chilled Solution Freeze Temperature
Zone Thermostat (CV units only)	Zone Setpoint	Set at desired space temperature.

Note: "No Controls" Units See System Engineer

Table 28. Sample maintenance log

		Refrigerant Circuit #1							Refrigerant Circuit #2						
Date	Current Ambient Temp. (°F)	Compr Oil level	Suct. Press. (Psig)	Disch. Press. (Psig)	Liquid Press. (Psig)	Liq Line Temp (°F)	Super-heat (°F)	Sub-cool (°F)	Compr Oil level	Suct. Press. (Psig)	Disch. Press. (Psig)	Liquid Press. (Psig)	Liq Line Temp (°F)	Super-heat (°F)	Sub-cool (°F)
		- ok - Low							- ok - Low						
		- ok - Low							- ok - Low						
		- ok - Low							- ok - Low						
		- ok - Low							- ok - Low						
		- ok - Low							- ok - Low						
		- ok - Low							- ok - Low						
		- ok - Low							- ok - Low						
		- ok - Low							- ok - Low						
		- ok - Low							- ok - Low						
		- ok - Low							ok - Low						

Note: Check and record the data requested above each month during the cooling season with the unit running

Maintenance

Compressor Operational Sounds

The following discussion describes some of the operational sounds of Trane R-410A scroll compressors. These sounds do not affect the operation or reliability of the compressor.

At Shutdown:

When a Scroll compressor shuts down, the gas within the scroll expands and causes momentary reverse rotation until the discharge check valve closes. This results in a “flutter” type sound.

At Low Ambient Start-Up:

When the compressor starts up under low ambient conditions, the initial flow rate of the compressor is low due to the low condensing pressure. This causes a low differential across the thermal expansion valve that limits its capacity. Under these conditions, it is not unusual to hear the compressor rattle until the suction pressure climbs and the flow rate increases.

Scroll Compressor Failure Diagnosis and Replacement

The RAUJ product does not have microelectronics that provide compressor failure diagnostic capability at the unit level. CSHN compressors (used in 80-120T RAUJ units) do include a module in each compressor junction box that recognizes certain fault conditions. Refer to Unit Description section of this manual for protection features included with RAUJ units. For more detailed information regarding compressor failure diagnosis and replacement of scroll compressors, refer to COM-SVN01A-EN.

Table 35 lists the specific compressor electrical and the circuit breaker trip information. A tripped circuit breaker does not necessarily mean a compressor has failed, but if the circuit breaker has not tripped the compressor is probably good. Verify first that simpler problems don't exist including: low pressure, high pressure, discharge temperature, or power supply phasing and voltage issues.

Refrigerant Evacuation and Charging

⚠WARNING

R-410A Refrigerant under Higher Pressure than R-22!

The units described in this manual use R-410A refrigerant which operates at higher pressures than R-22 refrigerant. Use ONLY R-410A rated service equipment or components with these units. For specific handling concerns with R-410A, please contact your local Trane representative.
Failure to use R-410A rated service equipment or components could result in equipment exploding under R-410A high pressures which could result in death, serious injury, or equipment damage.

⚠WARNING

Refrigerant under High Pressure!

System contains oil and refrigerant under high pressure. Recover refrigerant to relieve pressure before opening the system. See unit nameplate for refrigerant type. Do not use non-approved refrigerants, refrigerant substitutes, or refrigerant additives. Failure to recover refrigerant to relieve pressure or the use of non-approved refrigerants, refrigerant substitutes, or refrigerant additives could result in an explosion which could result in death or serious injury or equipment damage.

The compressor manifold system was designed to provide proper oil return to each compressor. The refrigerant manifold must not be modified in any way. Should a compressor replacement become necessary and a suction line filter drier is to be installed, install it at least the minimum distance upstream of the suction manifold Tee as shown in Figure 81, p. 100 and Figure 82, p. 100. Refer to SS-APG012-EN for recommended suction filter selections.

NOTICE:

Compressor Damage!

Do not alter compressor manifold piping. Altering the manifold piping could cause oil return problems and compressor failure.

NOTICE:

Compressor Damage!

If it becomes necessary to remove or recharge the system with refrigerant, it is important that the following actions are taken. Failure to do so could cause permanent damage to the compressor.

- **To prevent cross contamination of refrigerants and oils, use only dedicated R410A service equipment.**
- **Disconnect unit power before evacuation and do not apply voltage to compressor while under vacuum.**
- **Due to presence of POE oil, minimize system open time. Do not exceed 1 hour.**
- **When recharging R-410A refrigerant, follow procedures outlined in the Start-Up section of this IOM.**
- **Allow the crankcase heater to operate a minimum of 24 hours before starting the unit.**

Failure to follow these instructions could result in compressor failure.

Important: *Do not spill compressor oil. Refrigerant oil is detrimental to some roofing materials. Care must be taken to protect the roof from oil leaks or spills.*

Important: *Do not release refrigerant to the atmosphere! If adding or removing refrigerant is required, the service technician must comply with all federal, state, and local laws.*

Compressor Start-up

Discoloration of the oil indicates that an abnormal condition has occurred. If the oil is dark and smells burnt, it has overheated because of: compressor operating at extremely high condensing temperatures; high superheat; a compressor mechanical failure; or, occurrence of a motor burnout.

If a motor burnout is suspected, use an acid test kit (KIT15496) to check the condition of the oil. Test results will indicate an acid level has exceeded the limit if a burnout occurred. Oil test kits must be used for POE oil (OIL00079 for a quart container or OIL00080 for a gallon container) to determine whether the oil is acidic. If a motor burnout has occurred, change the oil in all compressors in a tandem or trio set.

CSHD Compressors (20-60T)

For CSHD compressors this will require that the oil be removed using a suction or pump device through the oil equalizer Rotolock fitting, see Figure 77. Use a dedicated device for removing oil. It is good practice to flush the suction device with clean oil prior to use. Place a catch pan under the oil equalizer Rotolock connection fitting on the compressor to catch the oil that will come out of the compressor when the oil equalizer tube is removed from the compressor.

Prior to reinstalling the oil equalizer line to each compressor, replace the Teflon gasket on the oil equalizer Rotolock fitting on each compressor. See Figure 78. Torque Rotolock nut to the values listed in Table 30, p. 99

Charge the new oil into the Schrader valve on the shell of the compressor. Due to the moisture absorption properties of POE oil, do not use POE oil from a previously opened container. Also discard any excess oil from the container that is not used.

CSHN Compressors (80-120T)

CSHN compressors have an oil drain valve, See Figure 79, which allows the oil to be drained out of the compressor. After the refrigerant has been recovered, pressurize the system with nitrogen to help remove the oil from the compressor.

Figure 77. CSHD

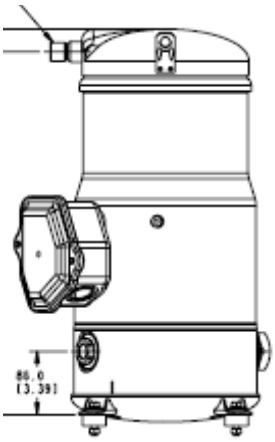

Figure 78. Teflon gasket

Figure 79. CSHN

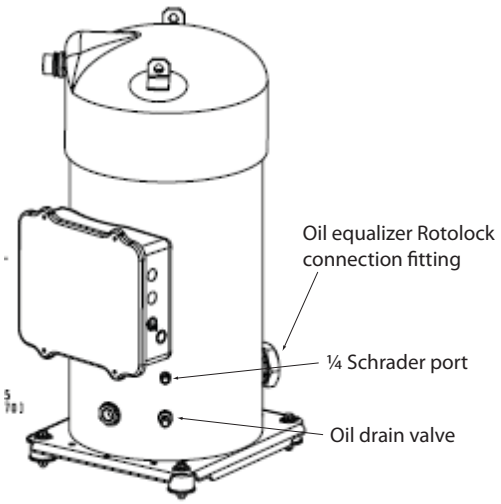

.

Charge the new oil into the Schrader valve or oil drain valve on the shell of the compressor. Due to the moisture absorption properties of POE oil, do not use POE oil from a previously opened container. Also discard any excess oil from the container that is not used.

Table 29. Oil charge per compressor

Compressor	Pints
CSHD 110 thru 183	7.0
CSHN 176 thru 250	14.2

Table 30. Torque requirements for rotolock fittings

CSHD*	64 +/- 12 ft-lbs
CSHN*	100 +/- 10 ft-lbs

Note: *Always replace gasket when reassembling oil equalizer lines.*

Electrical Phasing: It is very important to review and follow the Electrical Phasing procedure described in the startup procedure of this IOM.

If the compressors are allowed to run backward for even a very short period of time, internal compressor damage could occur and compressor life could be reduced.

If a scroll compressor is rotating backwards, it will not pump, make a loud rattling sound, low side shell gets hot, and draw ½ expected amps. Immediately shut off the unit. Ensure that unit phasing is correct. If the incorrect phasing is determined to be at one compressor, interchange any two compressor leads to correct the motor phasing.

Precision Suction Restrictor: RAUJ tandems with unequal compressors and all RAUJ trios use precision suction restrictors to balance the oil levels in the compressors. For manifolded compressors in RA units, this restrictor is placed in the compressor indicated in Table 31, p. 99. When replacing this compressor, it is imperative that the proper restrictor is selected from those provided with the replacement compressor.

When the compressors are restarted verify that correct oil levels are obtained when all compressors are running in a manifold set.

Figure 80. Precision suction restrictor

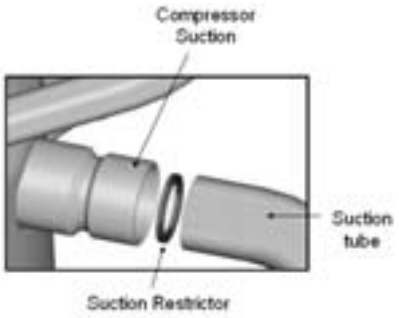

Table 31. Suction restrictor location

25 Ton	1A	CSHD125
50 Ton	1A, 2A	CSHD142
80 Ton	1C, 2C	CSHN176
100 Ton	1A, 1B, 2A, 2B	CSHN184
120 Ton	1C, 2C	CSHN250

Table 32. 20-60 Ton unit compressor circuit breakers (200-230 volts)

		1A/ 2A	1B / 2B	1A/ 2A	1B / 2B
Unit	**Voltage**	**Must Hold**		**Must Trip**	
20 Ton	200	50.4	50.4	58	58
	230	43.2	43.2	49.7	49.7
25 Ton	200	50.4	63.1	58	72.5
	230	43.2	57.1	49.7	65.7
30 Ton	200	69.3	69.3	79.7	79.7
	230	59.4	59.4	68.3	68.3
40 Ton	200	50.4	50.4	58	58
	230	43.2	43.2	49.7	49.7
50 Ton	200	57.1	63.1	65.7	72.5
	230	51.4	57.1	59.2	65.7
60 Ton	200	69.3	69.3	79.7	79.7
	230	59.4	59.4	68.3	68.3

Table 33. 80-120 Ton unit compressor circuit breakers (200-230 volts)

		1A / 2A	1B / 2B	1C / 2C	1A / 2A	1B / 2B	1C / 2C
Unit	**Voltage**	**Must Hold**			**Must Trip**		
80 Ton	200	73.7	73.7	73.7	84.7	84.7	84.7
	230	63.1	63.1	63.1	72.5	72.5	72.5
100 Ton	200	73.7	73.7	105.2	84.7	84.7	121
	230	63.1	63.1	90.7	72.5	72.5	104.3
120 Ton	200	105	105.2	105.2	121	121	121
	230	90.7	90.7	90.7	104.3	104.3	104.3

Table 34. 20-60 Ton unit compressor circuit breakers (460-575 volts)

		1A/ 2A	1B / 2B
Unit	**Voltage**	**Dial Setting**	
20 Ton	460 575	20.8 17.7	20.8 17.7
25 Ton	460 575	20.8 17.7	24.9 21.4
30 Ton	460 575	28.5 25.9	28.5 25.9
40 Ton	460 575	20.8 17.7	20.8 17.7
50 Ton	460 575	22.6 19.1	24.9 21.4
60 Ton	460 575	28.5 25.9	28.5 25.9

Table 35. 80-120 Ton unit compressor circuit breakers (460-575 volts)

		1A / 2A	1B / 2B	1C / 2C
Unit	**Voltage**	**Dial Setting**		
80 Ton	460 575	28.4 22.7	28.4 22.7	28.4 22.7
100 Ton	460 575	28.4 22.7	28.4 22.7	41.6 33.3
120 Ton	460 575	41.6 33.3	41.6 33.3	41.6 33.3

Figure 81. Suction line filter installation: 20-60 Ton units

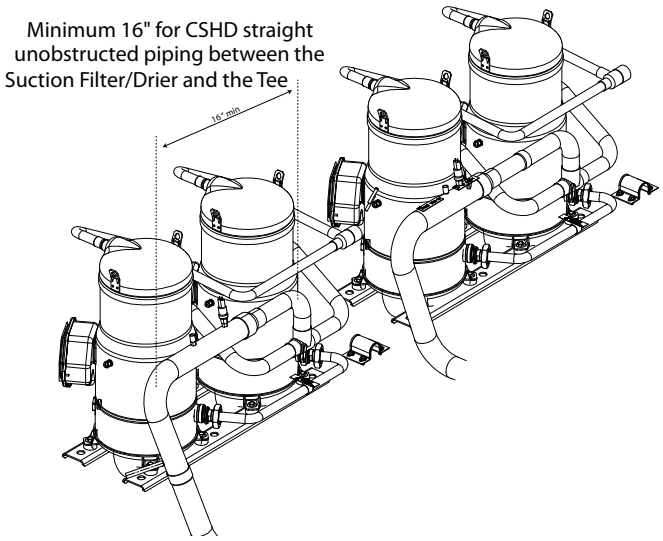

Figure 82. Suction line filter installation: 80-120 Ton units

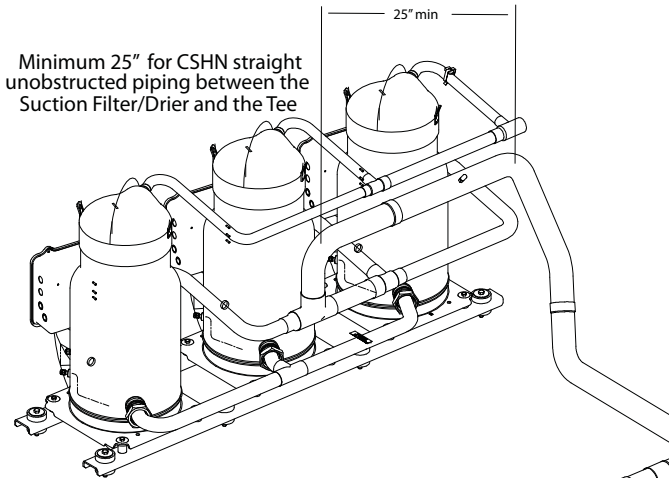

Fuse Replacement Data

Table 36. Fuse replacement selection

Fuse Description	Unit Size	Unit Voltage	Fuse Type	Fuse Size
Condenser Fan Fuse (1F1-1F3 on 20 - 30 Ton) (1F1-1F6 on 40 - 60 Ton)	20-60 Ton	200/230 460/575 380/415	Class RK5	25 Amp 15 Amp
Control CKT Fuse 1F7	20 - 30 40 - 60	All	Class CC FNQ R	3.2 6.25
Compressor Protector Fuse 1F8 20 - 60 1F9 40 - 60	20 -60 Ton	All	ABC - 6	6 Amp
Control Circuit Fuse 1F1	80 - 120	All	Class CC FNQ-R	10 Amp
Compressor Protector Fuse 1F2 - 1F3	80 - 120	All	ABC - 6	6 AMP
Condenser Fan Fuse 1F4-1F9	80	200 V 230 V 460 V 575 V	Class RK5	30 Amp 25 Amp 20 Amp 15 Amp
Condenser Fan Fuse 1F4-1F9	100 - 120	200 / 230 V 460 V 575 V	Class RK5	35 Amp 25 Amp 20 Amp
Transformer Fuse 1F12 - 1F13	All	200 V 230 V 460 V	FNQ-R	6 Amp 5 Amp 4 Amp

Fall Restraint - Condenser Section Roof

⚠WARNING

Falling Off Equipment!

This unit is built with fall restraint slots located on unit top that MUST be used during servicing. These slots are to be used with fall restraint equipment that will not allow an individual to reach the unit edge. However such equipment will NOT prevent falling to the ground, for they are NOT designed to withstand the force of a falling individual. Failure to use fall restraint slots and equipment could result in individual falling off the unit which could result in death or serious injury.

Figure 83. Fall restraint slot location

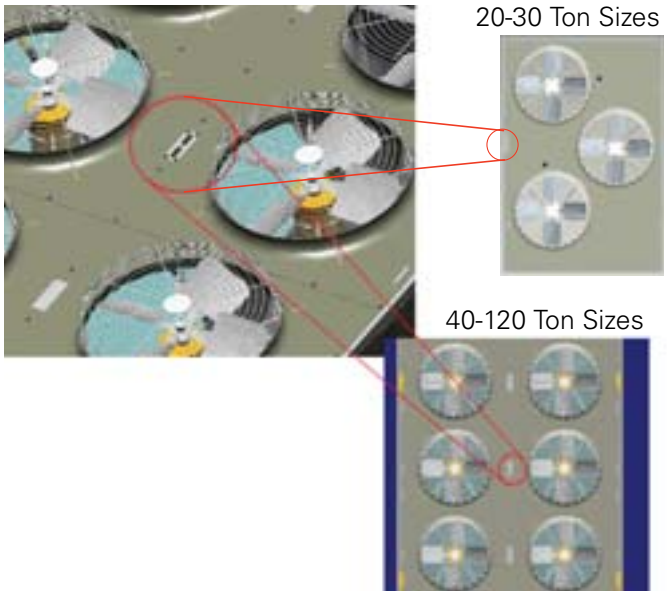

Figure 84. Fall restraint slot location (inset)

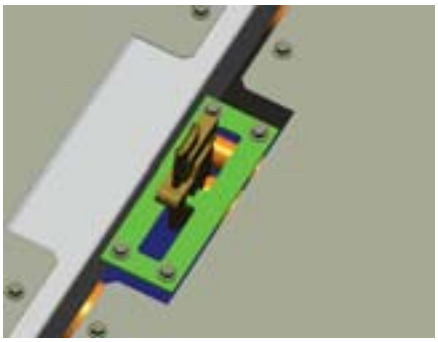

This unit is built with fall restraint slots located on unit top that must be used during servicing. See Figure 83 and Figure 84.

Monthly Maintenance

Air Handling Equipment

⚠WARNING

Hazardous Voltage!

Disconnect all electric power, including remote disconnects before servicing. Follow proper lockout/tagout procedures to ensure the power cannot be inadvertently energized. Failure to disconnect power before servicing could result in death or serious injury.

Before completing the following checks, turn the system control circuit switch 1S2 and 5S1 to the "Off" position. Open the main power disconnect switch for the Condensing Unit and Air Handling Unit and "lock it" in the "Off" position before removing any access panels.

- Inspect the return air filters. Clean or replace them if necessary.
- Check the evaporator drain pan and condensate piping to ensure that there are no blockages.
- Inspect the evaporator coils for dirt. If the coils appear dirty, clean them according to the instructions described in the “Coil Cleaning” section.
- Inspect the economizer damper hinges and pins (if applicable) to ensure that all moving parts are securely mounted. Clean the blades as necessary.
- Verify that all damper linkages move freely; lubricate with white grease, if necessary.
- Check Supply Fan motor bearings; repair or replace the motor as necessary.
- Check the fan shaft bearings for wear. Replace the bearings as necessary.
- Lubricate supply fan bearings. Contact equipment manufacturer for recommended greases.

NOTICE:

Bearing Damage!

To prevent damage to fan bearings, do not over lubricate. Over lubrication can be just as harmful as not enough grease.

Important: *Use a hand grease gun to lubricate bearings. Add grease until a light bead appears all around the seal.*

Note: *After greasing the bearings, check the setscrews to ensure that the shaft is held securely to the bearings and fan wheels. Make sure that all bearing supports are tight.*

- Check the supply fan belt(s). If the belts are frayed or worn, replace them.
- Verify that all wire terminal connections are tight.
- Inspect unit for unusual conditions (e.g., loose access panels, leaking piping connections, etc.)
- When checks are complete, verify all retaining screws are reinstalled in unit access panels.

Condensing Unit

⚠WARNING

Rotating Components!

The following procedure involves working with rotating components. Disconnect all electric power, including remote disconnects before servicing. Follow proper lockout/tagout procedures to ensure the power cannot be inadvertently energized. Failure to disconnect power before servicing could result in rotating components cutting and slashing technician which could result in death or serious injury.

- Manually rotate the condenser fans to ensure free movement and check motor bearings for wear. Verify that all of the fan mounting hardware is tight.
- Verify that all wire terminal connections are tight.
- Inspect the condenser coils for dirt and foreign debris. If the coils appear dirty, clean them according to the instructions described in the “Coil Cleaning” section.
- Inspect the compressor and condenser fan motor contactors. If the contacts appear severely burned or pitted, replace the contactor. Do not clean the contacts.
- Check the compressor oil level. (Compressors "Off")

Coil Cleaning

NOTICE:

Coil Cleaners!

Coil cleaners can damage roofs, surrounding buildings, vehicles, etc. Cleaning substances should be checked to ensure that they will not cause damage to surroundings. Coils and roof (if applicable) should be rinsed thoroughly. Do not spray coil cleaners in windy conditions.

Regular coil maintenance, including annual cleaning, enhances unit’s operating efficiency by minimizing:

- compressor head pressure and amperage draw;
- water carryover;
- fan brake horsepower; and,
- static pressure losses.

At least once each year—or more often if the unit is located in a “dirty” environment—clean the microchannel condenser using the instructions outlined below. Be sure to follow these instructions as closely as possible to avoid damaging the coils.

To clean refrigerant coils, use a soft brush and a sprayer.

Note: *DO NOT use any detergents with microchannel condenser coils. Pressurized water or air ONLY.*

1. Remove enough panels from the unit to gain safe access to coils..

⚠WARNING

No Step Surface!

Do not walk on the sheet metal drain pan. Walking on the drain pan could cause the supporting metal to collapse, resulting in the operator/technician to fall. Failure to follow this recommendation could result in death or serious injury.

Important: *Bridging between the main supports required before attempting to enter into the unit. Bridging may consist of multiple 2 by 12 boards or sheet metal grating.*

2. Straighten any bent coil fins with a fin comb.
3. For accessible areas, remove loose dirt and debris from both sides of the coil. For dual row microchannel condenser coil applications, seek pressure coil wand extension through the local Trane Parts Center..

Note: *DO NOT use any detergents with microchannel coils. Pressurized water or air ONLY.*

4. Pour the cleaning solution into the sprayer. If a high-pressure sprayer is used:
   a. The minimum nozzle spray angle is 15 degrees.
   b. Do not allow sprayer pressure to exceed 600 psi.
   c. Spray the solution perpendicular (at 90 degrees) to the coil face.
5. Spray the leaving-airflow side of the coil first; then spray the opposite side of the coil. For evaporator and reheat coils, allow the cleaning solution to stand on the coil for five minutes.
6. Rinse both sides of the coil with cool, clean water.
7. Inspect both sides of the coil; if it still appears to be dirty, repeat Steps 6 and 7.
8. Reinstall all of the components and panels removed in Step 1; then restore power to the unit.
9. For evaporator and reheat coils, use a fin comb to straighten any coil fins which were inadvertently bent during the cleaning process.

Microchannel Condenser Coil Repair and Replacement

If microchannel condenser coil repair or replacement is required, seek HVAC Knowledge Center information or Service Guide document RT-SVB83*-EN for further details.

EVP Remote Evaporator Chiller

The brazed plate evaporator is difficult to clean should it become plugged with debris so proper installation and maintenance of the inlet water strainer is important. Particles larger than 0.039” entering the heat exchanger could block flow passages causing a failure. Indications of a plugged BPHE evaporator include “wet” suction due to lack of heat exchange, loss of superheat control, depressed discharge superheat (superheat less than 63°F), compressor oil dilution and/or starvation and premature compressor failure.

Minimum water flow rate must be maintained to avoid laminar flow, potential evaporator freezing, scaling and poor temperature control.

NOTICE:

Heat Exchanger Damage!

Do not stop water flow with the refrigeration system running. Freezing and heat exchanger damage could occur.

Maximum water flow rate must not be exceeded to avoid possible erosion.

Water Strainer Maintenance

To protect the evaporator and for maximum efficiency, the strainer must be cleaned. A differential pressure gauge installed across the inlet and outlet will indicate pressure loss due to clogging and may be used as a guide to determine when cleaning is required. Normally when differential pressure reaches 5-10psi, the screen must be cleaned. To clean, open and flush out until any sediment is removed.

EVP Evaporator Replacement

If the evaporator requires replacement, it is very important that the new evaporator be replaced correctly and with the correct refrigerant and water piping connections. The refrigerant inlet/liquid connection is at the bottom of the evaporator and the refrigerant outlet/suction connection is at the top of the evaporator and both are on the same side. Pay particular attention to evaporators with dual circuits. Avoid cross-circuiting when installing the new evaporator. Proper brazing techniques for dissimilar materials must be followed, see “Brazing Procedures” section.

Water Loop

If the water loop is drained for an extended period, pipe sections between the strainer and the heat exchanger should be cleaned or replaced, to prevent rust buildup from entering the chiller.

Warranty and Liability Clause

COMMERCIAL EQUIPMENT RATED 20 TONS AND LARGER AND RELATED ACCESSORIES

PRODUCTS COVERED

This warranty* is extended by Trane Inc. and applies only to commercial equipment rated 20 Tons and larger and related accessories.

The Company warrants for a period of 12 months from initial start-up or 18 months from date of shipment, whichever is less, that the Company products covered by this order (1) are free from defects in material and workmanship and (2) have the capacities and ratings set forth in the Company's catalogs and bulletins, provided that no warranty is made against corrosion, erosion or deterioration. The Company's obligations and liabilities under this warranty are limited to furnishing f.o.b. factory or warehouse at Company designated shipping point, freight allowed to Buyer's city (or port of export for shipment outside the conterminous United States) replacement equipment (or at the option of the Company parts therefore) for all Company products not conforming to this warranty and which have been returned to the manufacturer. The Company shall not be obligated to pay for the cost of lost refrigerant. No liability whatever shall attach to the Company until said products have been paid for and then said liability shall be limited to the purchase price of the equipment shown to be defective.

The Company makes certain further warranty protection available on an optional extra-cost basis. Any further warranty must be in writing, signed by an officer of the Company.

The warranty and liability set forth herein are in lieu of all other warranties and liabilities, whether in contract or in negligence, express or implied, in law or in fact, including implied warranties of merchantability and fitness for particular use. In no event shall the Company be liable for any incidental or consequential damages.

THE WARRANTY AND LIABILITY SET FORTH HEREIN ARE IN LIEU OF ALL OTHER WARRANTIES AND LIABILITIES, WHETHER IN CONTRACT OR IN NEGLIGENCE, EXPRESS OR IMPLIED, IN LAW OR IN FACT, INCLUDING IMPLIED WARRANTIES OF MERCHANTABILITY AND FITNESS FOR PARTICULAR USE, IN NO EVENT SHALL WARRANTOR BE LIABLE FOR ANY INCIDENTAL OR CONSEQUENTIAL DAMAGES.

Manager - Product Service

Trane Inc.

Clarksville, Tn 37040-1008

PW-215-2688

*Optional Extended Warranties are available for compressors and heat exchangers of Combination Gas-Electric Air Conditioning Units.

Wiring Diagrams

Note: *Published unit wiring diagrams (individual, separate diagrams for unitary product lines) are available via e-Library.*

Drawing Number	Description
2307-4483	Unit Connection Wiring Split - System Condensing Unit Air Cooled RAUJ 20-60 Ton units
2307-4495	Connection-Adder Plates Split System Condensing Unit RAUJ 80-120 Ton units
2307-9116	Power Schematic - Split System Condensing Unit RAUJ 20-60 Ton units
2307-9208	Schematic w/No System Controls - Split System Condensing Unit RAUJ 20-60 Ton units
2307-9209	Schematic w/Constant Volume Controls - Split System Condensing Unit RAUJ 20-60 Ton units
2307-9210	Schematic w/Variable Air Volume Controls - Split System Condensing Unit RAUJ 20-60 Ton units
2307-9211	Schematic w/EVP Controls - Split System condensing Unit RAUJ 20-60 Ton units
2307-9212	Connection - Main Control Box & Raceway Devices - Split System Condensing Unit RAUJ 20-60 Ton units
2307-9122	Field Connection Diagram - Split System Condensing Unit RAUJ 20-60 Ton units
2307-9218	Power Schematic - Split System Condensing Unit RAUJ 80-120 Ton units
2307-9214	Schematic - Air Cooled Diagram - Split System Condensing Unit RAUJ 80-120 Ton units w/No Controls
2307-9215	Schematic - Air Cooled Diagram - Split System Condensing Unit RAUJ 80-120 Ton units w/Variable Air Volume Controls
2307-9216	Schematic - Air Cooled Diagram - Split System Condensing Unit RAUJ 80-120 Ton units w/EVP Controls
2307-9217	Connection - Air Cooled Control Box Diagram - Split System Condensing Unit RAUJ 80-120 Ton units
2307-9144	Field Connection Air Cooled Diagram - Split System Condensing Unit RAUJ 80-120 Ton units
2307-9219	Connection Raceway Diagram - Split System Condensing Unit RAUJ 80-120 Ton units
2307-3900	Connection - Low Ambient Damper Option 20-120 Ton units

Trane optimizes the performance of homes and buildings around the world. A business of Ingersoll Rand, the leader in creating and sustaining safe, comfortable and energy efficient environments, Trane offers a broad portfolio of advanced controls and HVAC systems, comprehensive building services, and parts. For more information, visit www.Trane.com.

Trane has a policy of continuous product and product data improvement and reserves the right to change design and specifications without notice.

© 2012 Trane All rights reserved

SS-SVX11H-EN 30 Oct 2012
Supersedes SS-SVX11G-EN (05 Mar 2012)

We are committed to using environmentally conscious print practices that reduce waste.