STATEMENT OF WORK

PROJECT TITLE: NEC DWTP PLC REPLACEMENT.

LOCATION: NEC UTILITY BLDG. 50 AV DES ETATS UNIS

REFERENCE:2026 – NEC WATER TREATEMENT SYM – V.02

DATE:28-JUL-2026

1. Project Statement

Post Bujumbura has a need to replace a faulty domestic water treatment plant (DWTP) Programmable Logic Controller (PLC) and add BACnet to it to upgrade communication to Building Automation System (BAS) of which FAC team will be able to monitor real time levels, production and water distribution to the buildings.

The current PLC Model Allen-Bradely MicroLogix 1200 has suffered from a fatal internal failure.

1.1 Work Description

Post wants the service of a contractor who can.

1.1.1 Provide new unlocked Programmable Logic Controller (PLC) and HMIs for the controller.

1.1.2 Provide all hardware and software equipment (Laptop with carrying case, software loaded on PC, programming cable, and support connections to the installed Allen Bradley PLC.)

1.1.3 The PLC ultrasonic level sensor hardware shall be Ladder Diagram (LD), also known as Ladder Logic.

1.1.4 Provide and upgrade any input/output cards and new ethernet cables for the PLCs.

1.1.5 Provide all parts and materials associated with BAS interface with the new BACnet converter.

1.1.6 Provide the recommended software for the water tank production and level management system and include the labor required to install.

1.1.7 Provide a minimum of eight (8) hours of hands-on training to Facility personnel. Training shall cover software, system operations including system monitoring and alarm management, and basic troubleshooting procedures.

1.2 Site Visit Recommendation

A pre-bid site visit is highly recommended for all prospective offerors.
This project requires the replacement of a faulty Programmable Logic Controller (PLC) at the Domestic Water Treatment Plant (DWTP) and the integration of BACnet communication protocols to interface with the Post's Building Automation System (BAS). Given the technical complexity and site-specific

conditions involved, a pre-bid site visit is strongly encouraged for the following reasons:

1.2.1 **Existing Infrastructure Assessment** The current PLC configuration, wiring architecture, and control panel layout are unique to Post Bujumbura's DWTP installation. Offerors must directly observe the existing equipment, panel space constraints, conduit routing, and power supply conditions to accurately scope the replacement and develop a realistic technical and cost proposal.

1.2.2 **BACnet Integration Complexity** Successful integration of BACnet communication into the existing BAS requires an understanding of the current BAS architecture, network topology, and points list already in use at Post. A site visit allows offerors to evaluate compatibility between the new PLC and BAS, identify potential integration challenges, and determine the appropriate BACnet objects/points needed for real-time monitoring of water levels, production rates, and distribution to Post buildings.

1.2.3 **Site-Specific Environmental and Operational Conditions** Local conditions—including power stability, ambient environmental factors, physical access limitations, and operational hours of the DWTP—can significantly affect installation methodology, equipment selection, and implementation timelines. These factors are often not fully conveyed through drawings or written specifications alone.

1.2.4 **Minimizing Risk of Scope Gaps and Change Orders** Because the DWTP must remain operational throughout the upgrade to avoid disruption to water production and distribution, offerors need firsthand knowledge of the plant's operational sequencing and any temporary bypass or redundancy requirements. A site visit reduces the risk of unforeseen conditions, scope gaps, and subsequent change orders after award.

1.2.5 **Verification of Existing As-Built Documentation** As-built drawings and equipment schedules may not fully reflect current field conditions due to prior repairs, modifications, or undocumented changes. A site visit provides offerors the opportunity to verify existing documentation against actual field conditions before submitting a technically sound and cost-effective proposal.

1.2.6 **Failure to conduct a site visit may result in incomplete or inaccurate proposals, underestimated costs, and increased risk of delays or disputes during contract performance.** The Government will not be responsible for any additional costs, delays, or claims arising from an offeror's failure to visit the site and verify existing conditions prior to bid submission.

1.3 Project Description:

1.3.1 For the PLC Work:

1.3.1.1 The contractor must replace and repair

- the main cabinet PLC that has suffered from a fatal internal failure.
- the RS232 port that is not functioning. This resulted in not being able to pull the current PLC program off for replacement.
- Power to the input/output cards not functioning.
- The built-in screen on the PLC is not functioning. The PLC goes immediately into a fault state upon power cycle, indicating an internal PLC error on the board/power distribution rail of the PLC.

1.3.1.2 Perform re-wiring in the main panel and label all the cables.

1.3.1.3 Contractors must ensure footprint of the new PLC, along with all of it's I/O cards will fit into the existing cabinet or if there will be need to have an additional cabinet.

1.3.1.4 The contractor also has the option of replacing the entire control panel rather than only the PLC, along with all of it's I/O cards and associated devices to address the underlying reliability concerns.

1.3.2 For the BAS Integration:

1.3.2.2 Main cabinet does not have enough room to mount the BAS module. The contractor will perform conduit work between one of the pump cabinets and the upgraded BAS module in order to utilize it. Cat 5/6 would need to be run from the pump panel to the BAS system, and 5 conductors ran from the main plc to the new BAS module.

1.3.2.3 The contractor must capture all points from the potable plant into the BAS system with the current design.

1.3.2.4 The contractor must capture all points from the pump panels (Booster and Triplex pumps) and relay to BAS system through upgraded BAS Module (BACnet).

1.3.2.5 The contractor will add an ethernet switch to make sure both points for Potable panel and pump panel are relayed to BACnet for BAS system.

1.3.2.6 Note that certain points are already hardwired from the RO plc's to the main PLC, the contractor must confirm if the wiring is still usable and in good condition.

1.3.2.7 The PLC sourcing and sinking points are detailed in wiring diagram from page 13 to 38.

2.0 System Overview

2.1 System Description

This system is designed as five skids including bag filters and chlorination skid, media and carbon filters skid, two RO skids and PH adjustment skid.

The complete treatment system is designed to provide up to 9000 gallons per day of potable quality water. Using city water or well water as the feed source. See system P&I Diagram in figure 1.0.

2.2 Sequence of Operation

Feed water is supplied to the RO unit at dynamic pressure. Feed water enters the system through an Inlet valve. Next, the feed water passes through a pre-filter for removal of suspended particles 5 microns or larger.

The filtered water enters a high-pressure pump which increases the water pressure to RO operating levels.

Inside the membrane assembly, a portion of the feed water, referred to as *product*, passes through a membrane barrier that rejects suspended and dissolved solids. The remaining portion of feed water, referred to as *reject,* carries concentrated contaminants out of the membrane assembly.

The product water from the membrane assembly is monitored for conductivity. A Programmable Logic Controller (PLC) controls the RO functions to maintain most efficient operation within the design parameters of the system.

Recovery, an important operating parameter, is the ratio of the product water to the feed water flow. Designed recovery rate for this system is 52%. See the System Specifications section 2.2 of this SOW for details.

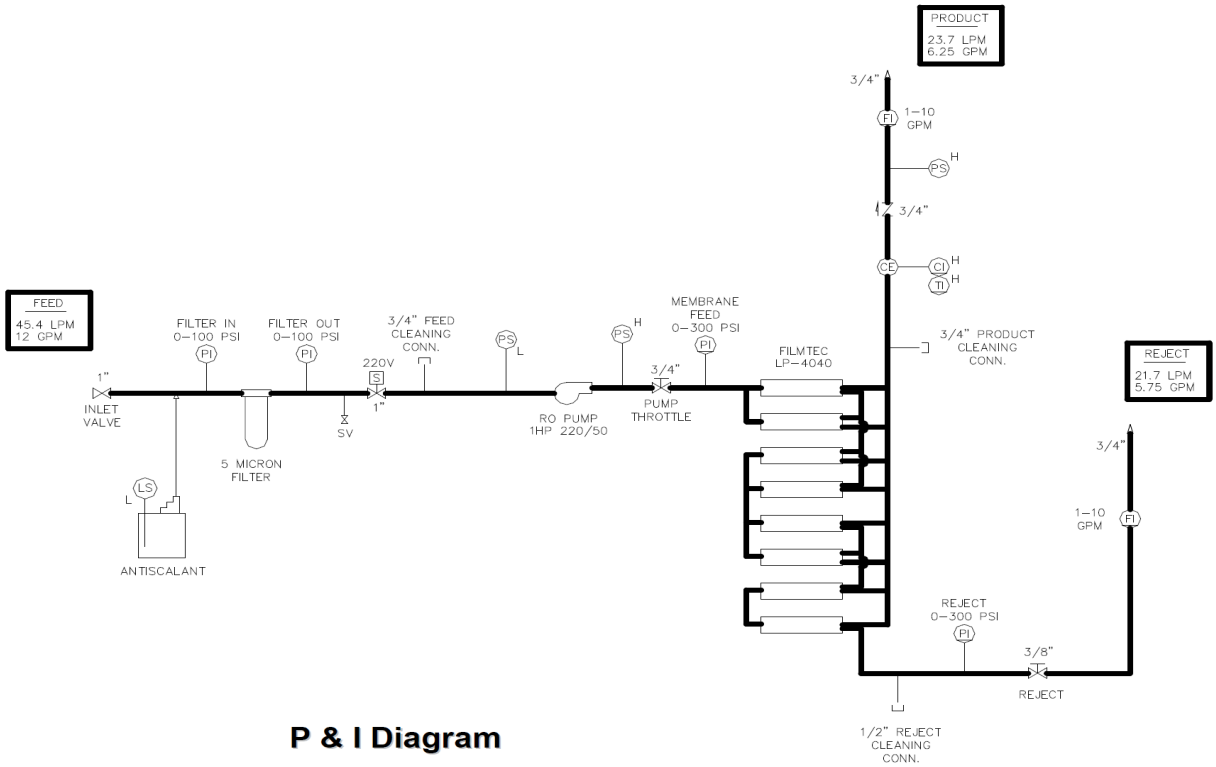

P & I Diagram

2.2 System Specifications

6.25 GPM

These specifications are based upon computer generated projections. The projections are determined by feed water chemistry, temperature, predicted capacity and anticipated 3-year flows.

Supply to Reverse Osmosis Unit (1”)..... 12 GPM (45.4 LPM)
RO Product to Service/Storage (3/4”) ..... 6.25 GPM (23.7 LPM)
RO Reject to Drain (3/4”) ..... 5.75 GPM (21.7 LPM)
Daily Total Permeate Production .....9,000 GPD
Expected
Feedwater TDS .....1000 MG/L
RO Product Water TDS .....<35 MG/L
Temperature.....25°C
Recovery 52%
Membrane Feed Pressure .....94 PSI

☒ Membrane Feed Pressure (MAXIMUM) 300 PSI
Exceeding this pressure may cause catastrophic vessel failure.

☒ Membrane Differential Pressure (ΔP MAXIMUM) <60 PSID
Exceeding this pressure may cause membrane failure.

Mains Supply.....400 VAC, 50 Hz, 3 PH
Main Circuit Breaker.....15 AMP
RO Pump 3HP
Pre-flush Time Setpoint..... 3 MIN
Post-flush Time Setpoint ..... 5 MIN

RO Pump Suction Low Pressure Switch Setpoint .....20 PSI

RO Pump Discharge High Pressure Switch Setpoint. .....~108 PSI

3.0 Terms

3.1 The contractor shall make arrangements for one full time project manager at the site who will inspect the quality of work and the conduct of the workers.
3.2 The Contracting Officer (CO) reserves the right to reject any of the contractor’s employee for security, safety, or performance reasons.
3.3 The contractor should strictly adhere to all instructions from the Contracting Officer’s Representative (COR) during progress of the project. All instruction will be provided in writing. Any instruction that causes a change to the SOW must be cleared and approved in writing by the CO first, and then signed by the contractor if they are in agreement.
3.4 The U.S. Embassy agrees to furnish water, power, and any storage areas needed for the execution of this project.
3.5 The U.S. Embassy reserves the right to open and search all containers or materials brought onto the site by the contractor or its employees.`
3.6 The contractor will make all effort to minimize damage to the existing work area and fuel control panel during the project. Any damage done will be repaired by the contractor to match pre-existing conditions at no cost to the U.S. Embassy Burundi.

3.7 No subcontracting will be permitted without prior authorization and written permission from the CO.
3.8 The contractor must follow all security and safety requirements as instructed by the U.S. Embassy.
3.9 The contractor shall restrict the movement of its workers to the project area only. No workers will be allowed to move freely inside the property.

4.0 Safety

4.1 The contractor will be required to adhere to the safety standards found in the *Safety and Health Requirements Manual*, EM 385-1-1, dated 30 November 2014.
4.2 The contractor is required to submit a Project Safety Plan as part of their proposal. The safety plan should list all significant safety risks associated with the project and how the contractor plans to minimize each.
4.3 The project may not start until the COR has reviewed the safety plan and has inspected the contractor's safety equipment that will be used on the project.
4.4 The contractor is responsible for providing adequate Personal Protective Equipment (PPE) for each task that is performed. Adequate PPE in this case indicates that there is enough for every employee and that it is in good condition. PPE must be worn at all times while on the job site.
4.5 The U.S. Embassy reserves the right to issue a "Stop Work" order at any point if there are safety violations or unsafe work practices. The contractor must promptly correct the deficiency and receive authorization from the COR before they resume work. Any time lost due to a "Stop Work" order will not be added to the project schedule.

Exhibit A - - STATEMENT OF WORK

1. SCOPE

The Replacement of Main Faulty PLC and Upgrade of BAS Module to BACnet with addition of ethernet switch.

1.1 Performance of Services

The service contractor shall perform is replacement of faulty Main PLC and upgrade BAS Integration module to BACnet to pool all the points from Potable and Pump system from the main PLC, Triplex pump PLC and Booster pump PLC:

- Replacing existing Main PLCs and BAS Module.
- The existing potable system controllers must be able to work with the new PLCs and HMIs.
- Introduce BACnet to pool all the points from PLC and associated devices to the existing BAS System.
- With care and diligence expected of a professional experienced service contractor to provide service of this type.
- In every respect to the reasonable satisfaction of the US Embassy Bujumbura.
- In conformity with all directions and requirements of US Embassy Bujumbura.

- Must provide information to the US Embassy as to the manner and timing of the performance of the service, on request.

The giving of any approval, direction, instruction or information by the US Embassy Bujumbura and compliance with the same by the Service Contractor will not relive or reduce the service contractor's sole responsibility for the performance of the services in accordance with this contract.

1.2 General Requirements

The contractor shall provide labor, resources and support and shall complete all its obligation and responsibilities in respect of this contract to perform replacement of faulty Main PLC and upgrade BAS Integration module to BACnet to pool all the points from Potable and Pump systems from the main PLC, Triplex pump PLC and Booster pump PLC or any other associated devices.

The US Embassy requires the Contractor to maintain the replaced PLCs, BACnet modules and ethernet switch, in reliable and efficient operating condition. The contractor shall provide all necessary managerial, administrative and direct labor personnel, and as well as all necessary transportation, equipment, tools to perform inspection and upgrade of fuel distribution system in accordance with the manufacturer's specification.

The contractor will not use any other method or substances which may cause damage to the system. Any damage or loss through negligence by the service contractor, sub-contractor, or service contractors' staff shall be the whole responsibility of the service contractor. The US Embassy Bujumbura may require the service contractor to make good the damage or pay for the cost of rectification.

All processes should include the use of suitable method, equipment, or substance in accordance with manufacturer's recommendations.

1.3 Purpose

This Scope of Work (SOW) define contract details and requirements for replacement of faulty Main PLC and upgrade BAS Integration module to BACnet to pool all the points from Potable and Pump system from the main PLC, Triplex pump PLC and Booster pump PLC, and a Certified Water system Technician/Engineer onsite to perform the replacement and upgrade services in Utility Building.

In addition, the application engineer will provide onsite training of new PLC and its level and production management software.

1.4 Background

US EMBASSY Bujumbura has an existing Domestic water treatment plant (DWTP) System located at Utility Building.

2. PERFORMAMNCE CRITERIA

2.1 Performance Objective

The objective of this agreement is to provide, within the Terms of contract, a professional level of service which provides:

- US Embassy Bujumbura satisfaction in respect to the replacement of faulty Main PLC and upgrade BAS Integration module to BACnet to pool all the points from Potable and Pump system from the main PLC, Triplex pump PLC and Booster pump PLC Prompt reaction to any change in arrangements or operational requirements of US Embassy Bujumbura.
- Compliance with statutory and regulatory provisions of the laws of the jurisdiction.
- Best in class practices within the industry. This includes:

The replacement of faulty Main PLC and upgrade BAS Integration module to BACnet to pool all the points from Potable and Pump system from the main PLC, Triplex pump PLC and Booster pump PLC which will be fully integrated the existing BAS System to monitor water levels, production, chemical dosing, water distribution, pump status, and various alarms associated with potable water production and pump distribution:

- Capable of water tank level and pump control to monitor water levels and distribution in real time.
- Programming/configuration can be saved to a SD-Card so when replacing the PLC or HMI, it's a simple import from your card.
- With the touch screen and graphic display navigating through the programming configuration via the PLC, HMI Configuration Software must be more user friendly.
- With the graphic display of different sensor alarms, it makes it easier to pinpoint and troubleshoot.
- Risk reduction for the US Embassy Bujumbura,
- Preservation of asset value, and
- Reduction in operating costs.

The contractor agrees that its performance under the contract shall be measured against performance criteria specified in this document or otherwise agreed at the time of commencement.

2.2 Performance Benchmarks

The Contractor must, for the duration of the contracted services, provide an onsite assessment of the facility for the PLC replacement and BAS upgrade to BACnet. The assessment will provide a basic design document with points list, topology and scope to provide the Embassy with the desired usage reporting which has been agreed by the US Embassy Bujumbura and the Contractor.

The Contractor must allow US Embassy Bujumbura access to the quality control system as well as relevant quality systems of its subcontractors so as to enable monitoring and quality auditing of the Upgraded system.

The US Embassy Bujumbura may reject any aspect of services that fails to comply with the requirements of the contract, or its quality system at any time.

2.3 Performance Monitoring and Reporting

The service contractor shall monitor its own performance against the criteria and benchmarks identified in this document and shall provide reports when reasonably required by the US Embassy Bujumbura.

2.4 Material and Workmanship

The supply of any spare part/replacement and materials for system upgrade such as input modules, output modules, communication modules, programming and display consoles etc. of the PLC/HMI Modernization Upgrade are covered in this agreement. Therefore, the contractor is required to quote the spare part, repair service or materials to US Embassy Bujumbura for approval before commencing any upgrading task or repair which requires spare parts, repair service, or consumable materials. All potential or known failures should be brought to the attention of the Facility Manger US Embassy Bujumbura or the authorized Contracting Officer.

Submittal per design and installation of this Upgrade system are added as an addendum. Use this information as reference to obtain needed Upgrading instructions from the manufacturers and as familiarization for the PM tickets that will be received throughout the performance of this contract. The contractor is also required to maintain logs of performance and records of manuals or any other required maintenance documentation that is recommended by the manufacturer to include record keeping using a Global Maintenance Management System (GMMS) as well as other administrative functions.

Additional services may be ordered at the discretion of the government for work relating to the operations, maintenance and repair or upgrade of the covered facilities, but not covered in the basic services of the contract, as described in this document.

Excluding from this scope of work are:

- Security systems
- Telecommunication systems
- Equipment owned and operated by tenant agencies
- Furnishings (not installed as fixtures)
- Paper and soap dispensing equipment in restroom.

The contractor shall supply the following:

INSTALLATION PARTS	QTY ea.
Allen Bradley PLC	2
BACNet Converter	1
Ethernet Switch	1
Site Training	1
Installation Materials	1
Logistics - Freight	1
Reports and Documentation	1

2.5 US Embassy Bujumbura Obligations

The US Embassy Bujumbura shall provide the Service Contractor with and make available to the service contractor such as reasonable access to US Embassy Bujumbura Compound, electricity and other utilities as reasonable required for the provision of these services.

The contracting officer will be the contractor's contact at Bujumbura US Embassy. The officer will assist and direct the contractor when scheduling work and answer all questions concerning the contract terms.

Post Contracting Officer (CO)	
Name	Elizabeth Al Sulaimani
Phone number	+25722207234
Post Contracting Officer representative (COR)	
Name	Isaac Kenneth Andebe
Phone number	+25722207038

2.6 Service Contractor Obligations

The Service Contractor shall:

- Provide adequately supervised employees as required by the law of the jurisdiction to carry out the services.
- Execute, perform and provide services in every respect to the reasonable satisfaction of the US Consulate and in conformity with all reasonable directions and requirements of the US Embassy Bujumbura.
- Ensure approximately qualified and experienced persons, who shall be properly supervised or directed by the service contractor.
- Cease any action at the direction of US Embassy Bujumbura.
- Make good any damage to the equipment or any part thereof caused by any act or omission of the service contractor.
- Obey all rules and instructions in force with the US Embassy Bujumbura Compound (including any non-smoking policy, etc.).
- Immediately notify the US Embassy Bujumbura in writing all matters affecting its responsibility.
- Obtain US Embassy Bujumbura's approval for any services to be undertaken outside the usual scheduled times for provision of the services.
- Provide evidence of qualifications and job history of the service contractor's personnel if required by the US Embassy Bujumbura.

- Ensure that any lost or unclaimed property found by the contractor is passed to the US Embassy at the first practicable opportunity.
- At the direction of US Embassy Bujumbura, remove from US Embassy Bujumbura compound any of the service contractor's personnel who misconduct themselves or are incompetent or negligent in performing their duties or who US Embassy Bujumbura considers undesirable to perform the services and
- Provide the US Embassy Bujumbura with 15 days of commencement of the contract, a schedule specifying the nature and timing of all the work to be completed.
- The contractor will supply all items mentioned for the completion of the specified works.
- Post to provide minimal manpower assistance if needed.
- The contractor shall bare all cost associated to damages done by his staff during the contract period.
- Post will provide escort to the contractor once access is cleared and approved by the regional security officer (RSO).
- Contractor personnel travelling to post shall provide travel info to post CO for generation of country clearance cable. The information shall be provided at least 30 days prior to the day of travel as follows:

    1. Full names
    2. Dates of Visit
    3. Flight Itinerary
    4. Name of company for third party contractors
    5. States whether meet and assist at airport is needed
    6. State whether post is requested to help to arrange accommodation
    7. State whether laptops, digital cameras or other electronics is needed for the task
    8. Burundian visa.
    9. Certificate of high threat security overseas seminar (HTSOS CLASS) may be required.
    10. Yellow fever card.

3. UPGRADING SPECIFICATION DETAILS

3.1 Precedence of Specifications

If and to the extent that there is an inconsistency between this system upgrade specification and any manufacturer's system upgrade specification, the manufacturer's system upgrade specification will prevail.

3.2 Hours of Work

The service contractor shall schedule all preventive maintenance during normal working hours which are defined as 0730 to 1715 Monday to Thursday and 0730 to 1215H on Fridays, inclusive of periodic maintenance which may be required on Saturdays, with the exception of any regular or special public holidays on which US Embassy Bujumbura

Compound is not open, or as agreed with the US Embassy Bujumbura prior to commencement of the contract. Working beyond these hours and days shall need prior approval from the Contracting Officer or the contracting officer representative.

4. DESCRIPTION OF THE WORKS

The service contractor must upgrade the performance and service of the Domestic Water Treatment Plant (DWTP) system in accordance with the minimum standard stated in the relevant Standards, unless stated otherwise and confirmed in writing by the US Embassy Bujumbura at the time of commencement of contract.

The works comprise of:

- Perform replacement of Domestic Water Treatment Plant (DWTP) and BAS Upgrade
- Provide an onsite assessment of the facility for modernization of the domestic water distribution system to pump, monitor, log and report production and usage at the site. The assessment will provide a basic design document with points list, topology and scope to provide the US Embassy Bujumbura with desired usage reporting.
- Installation Checklist:
- The following points should be reviewed in preparation for installation, and again when installation is complete.
    i. Review wiring diagram to ensure that all of the safety/wiring requirements have been met.
    ii. Check that all equipment at job site matches the DESIGN DRAWING SPECIFICATIONS for the tank sizes and control features required.
    iii. The console should be located as close as possible to the demarcation point of the hazardous area. Never mount inside the hazardous area.
    iv. POWER to the console should be properly wired to a DEDICATED 120/240 VAC CIRCUIT BREAKER. No other equipment can be powered from the same circuit breaker as the PLC/HMI panel.
    v. System cannot be connected to equipment that uses or generates more than 250 volts with respect to earth.
    vi. All PLC/HMI control panel grounds must be terminated at the GND BUSS BAR in the same service panel as fuel distribution power. A grounding rod, Coldwater pipe or other connection should not be used.
    vii. The probe inputs and the sensor inputs are two different intrinsically safe circuits and must be installed in separate cables or in one cable which has suitable insulation. Refer to NEC Article 504-30 (b) for additional information.
    viii. Do not drill or modify enclosure. Use only knockouts provided. Failure to comply will void warranty and may present a safety hazard.
    ix. I.S. cabling should be selected from the Cable Selection Chart. Each probe or sensor wire/cable run SHOULD NOT EXCEED THE MAXIMUM DISTANCE RATING ON THE CABLE SELECTION CHART. Color-coding or numbering is highly recommended.
    x. WATERPROOFING FIELD WIRE SPLICES using factory supplied splice kits is required for proper system operation.

5. BAS SYSTEM UPGRADE

The Contractor shall conduct the upgrade which will include but not limited to the following tasks to the existing Embassy Fuel monitoring system.

5.1 Installation, Upgrade & Training of the Domestic water treatment plant new PLC Setup.

5.2 Installation of PLC, HMIs, BACnet Converter and integration to BAS System.

6 PERFORMANCE INSPECTION AND REPORTS

6.1 Inspection

The Contractor shall complete a detailed inspection report (Exhibit A) following a detailed walk-thru inspection on the yearly PM or as agreed with US Embassy Bujumbura at the time of commencement of the contract. This report shall be submitted electronically in a form suitable to the US Embassy Bujumbura addressing, as a minimum, the criteria identified in the report template.

The Contractor will undertake the inspection with a representative of the US Embassy Bujumbura and report any incidents that have the potential to cause damage to the system.

7 PHOTOS AND CONTROL DIAGRAMS

Following are the photos of the system and control diagrams.

7.1 CONTROL DIAGRAMS

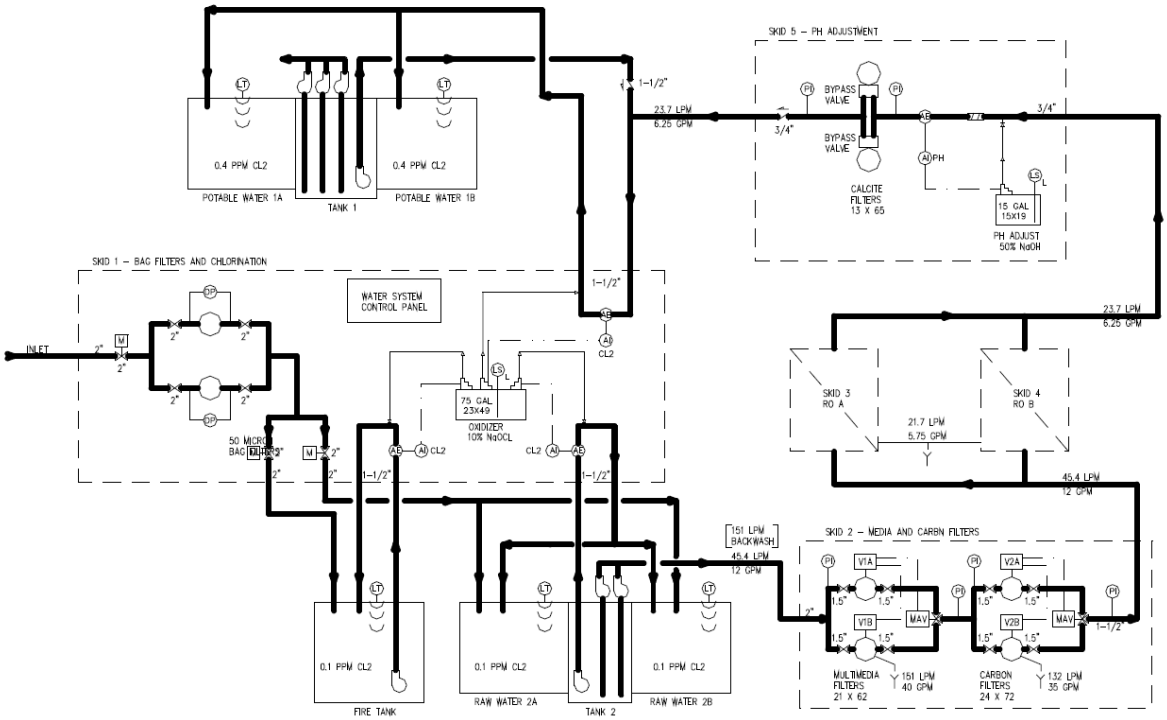

Figure 1.0 System P & I Diagram

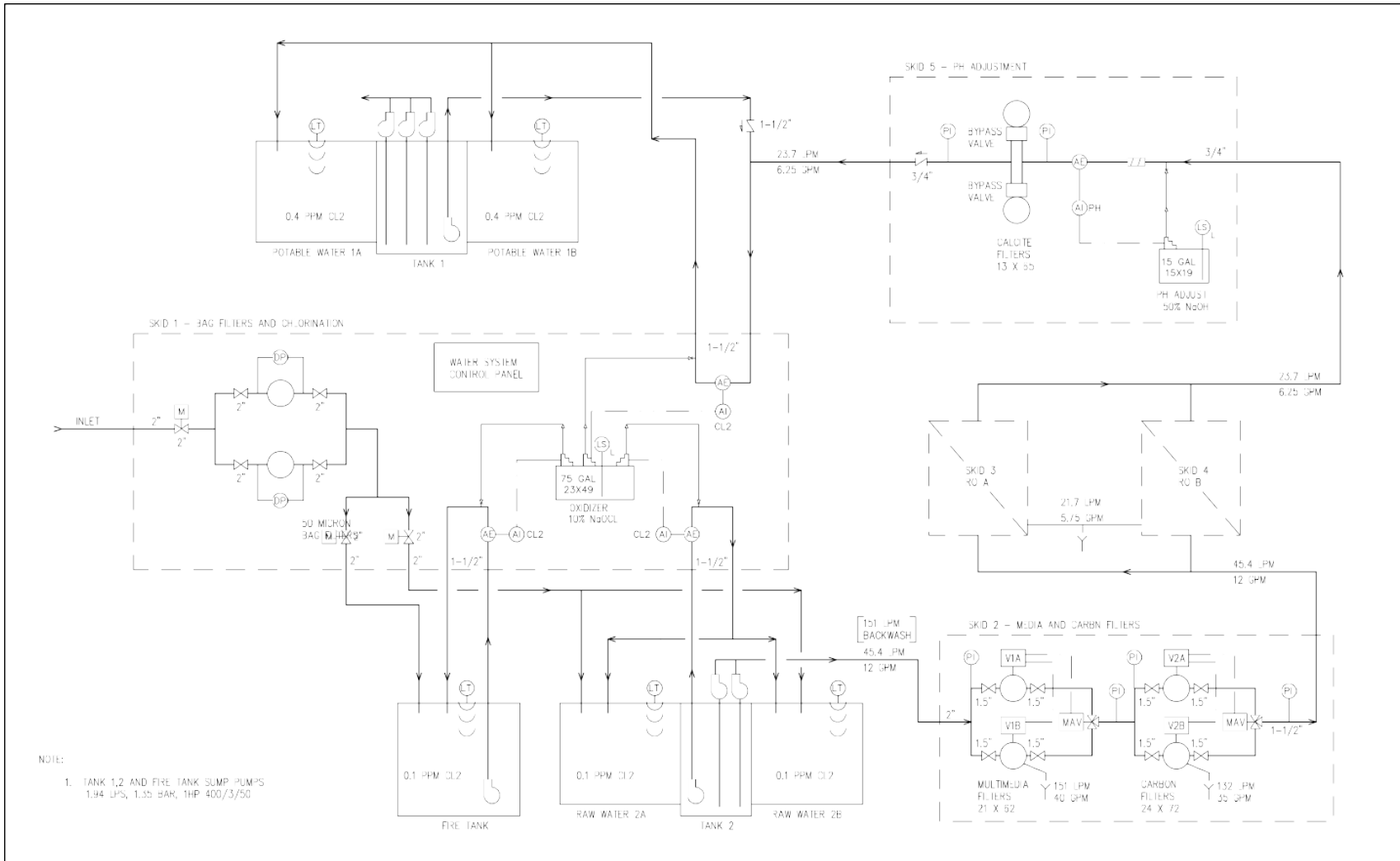

NOTE:

1. TANK 1,2 AND FIRE TANK SUMP PUMPS 1.94 LPS, 1.35 BAR, 1HP 400/3/50

A – ANALYTICAL	OOR – OUT OF RANGE	M – MOTORIZED OPERATOR	– BUTTERFLY VALVE	– 3 WAY BALL VALVE	– CENTRIFUGAL PUMP	– HIGH ALARM	– PANEL MOUNTED INSTRUMENT
C – CONDUCTIVITY	P – PRESSURE	– PNEUMATIC OPERATOR	– BALL VALVE	– RELIEF VALVE	– POSITIVE DISPLACEMENT PUMP	– LOW ALARM	– FLOW CONTROLLER
S – SENSOR	S – SWITCH	S – SOLENOID OPERATOR	– REGULATING VALVE	– FILTER/REGULATOR	– CHEM FEED PUMP	– CHEMICAL TANK MIXER	– ORIFICE PLATE
F – FLOW	SV – SAMPLE VALVE	LA – LOW ALARM	– CHECK VALVE	– CLEANING CONNECTION	– FLEXIBLE CONNECTOR	– STATIC MIXER	– SUCTION STABILIZER/ ACCUMULATOR
I – INDICATOR	T – TRANSMITTER	HA – HIGH ALARM					
L – LEVEL	TI – TEMPERATURE						
ORP – OXIDATION REDUCTION POTENTIAL	V – VIBRATION						
	Δ – DIFFERENTIAL						

REV	DATE	BY	DESCRIPTION
B	19AUG11	RCC	MOVED GAUGES ON SKID 2
A	20APR11	MJM	COMBINED INLET LINES SEPARATED INTO TANKS

DRAWING NO. G003398-2

FILE: flowtronex\3398\mech\3398-2.dgn
DESIGN BY: MJM SCALE: NONE
DRAWN BY: MJM SHEET 1 OF 2
CHK'D BY: MJM DATE: 04APR11

PROJECT: CADDELL 92937

APPROVED: DATE:

TITLE: 6.25 GPM DOMESTIC WATER SYSTEM P&I DIAGRAM

ITT Engineered for life
Water Equipment Technologies
580 Village Blvd., Suite 250
West Palm Beach, FL 33409

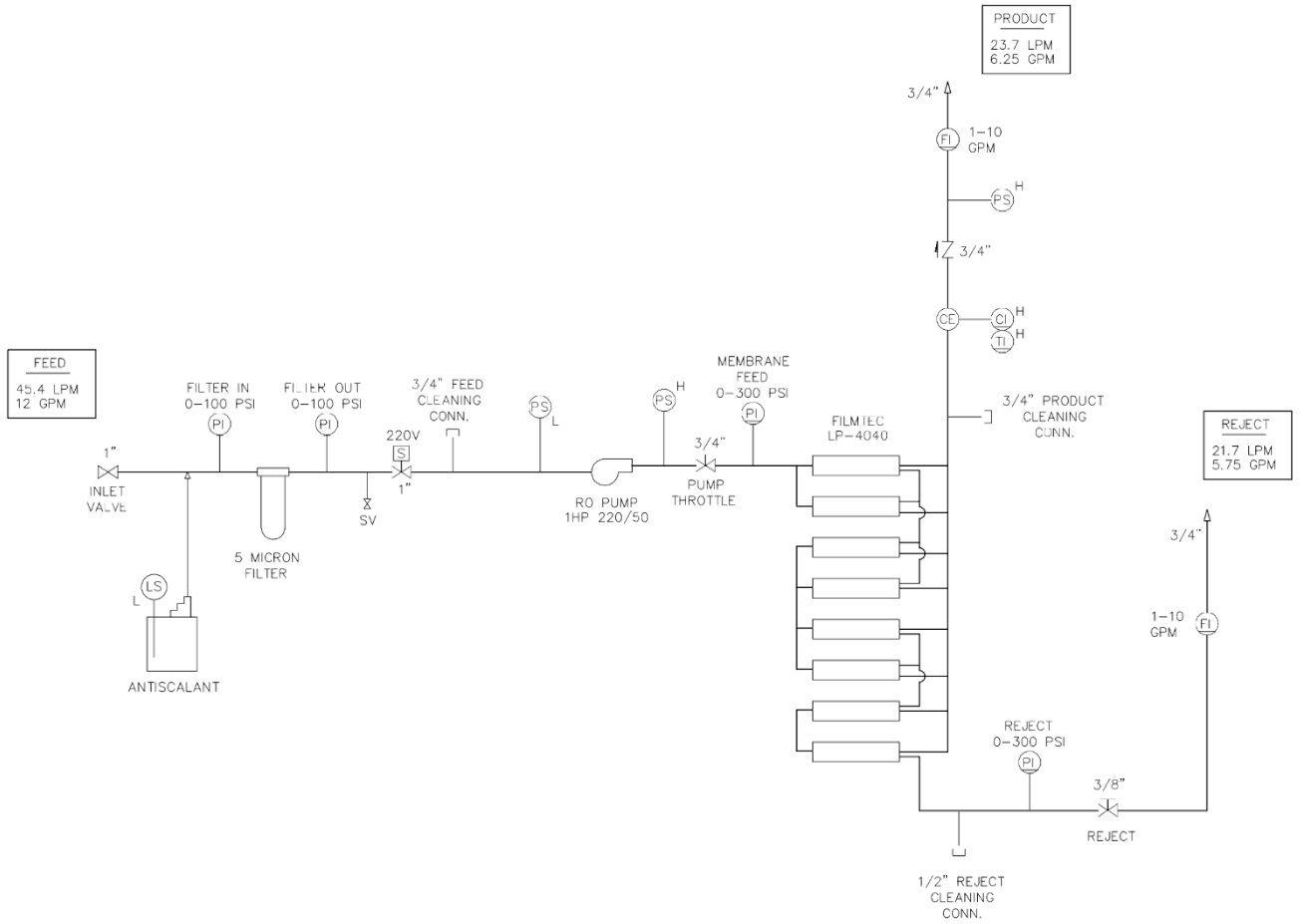

A – ANALYTICAL	OOR – OUT OF RANGE	M – MOTORIZED OPERATOR	– BUTTERFLY VALVE	– 3 WAY BALL VALVE	– CENTRIFUGAL PUMP	H X – HIGH ALARM	XX – PANEL MOUNTED INSTRUMENT
C – CONDUCTIVITY	P – PRESSURE	– PNEUMATIC OPERATOR	– BALL VALVE	– RELIEF VALVE	– POSITIVE DISPLACEMENT PUMP	X – LOW ALARM	– FLOW CONTROLLER
S – SENSOR	S – SWITCH	S – SOLENOID OPERATOR	– REGULATING VALVE	– FILTER/REGULATOR	– CHEM FEED PUMP	– CHEMICAL TANK MIXER	– ORIFICE PLATE
F – FLOW	SV – SAMPLE VALVE						
I – INDICATOR	T – TRANSMITTER						
L – LEVEL	TI – TEMPERATURE	LA – LOW ALARM	– CHECK VALVE	– CLEANING CONNECTION	– FLEXIBLE CONNECTOR	– STATIC MIXER	– SUCTION STABILIZER/ ACCUMULATOR
ORP – OXIDATION REDUCTION POTENTIAL	V – VIBRATION	HA – HIGH ALARM					
	Δ – DIFFERENTIAL						

REV	DATE	BY	DESCRIPTION
A	19AUG11	ROC	AS BUILT

DRAWING NO. GC03398-2

TILE: flowtronex\3398\mech\3398-2.dgn
DESIGN BY: MJM SCALE: NONE
DRAWN BY: MJM SHEET 2 OF 2
CHK'D BY: MJM DATE: 04APR11

PROJECT
CADDELL
92937

APPROVED: DATE:

TITLE
6.25 GPM
RO UNIT
P&I DIAGRAM

ITT
Engineered for life
Water Equipment Technologies
580 Village Blvd., Suite 250
West Palm Beach, FL 33409

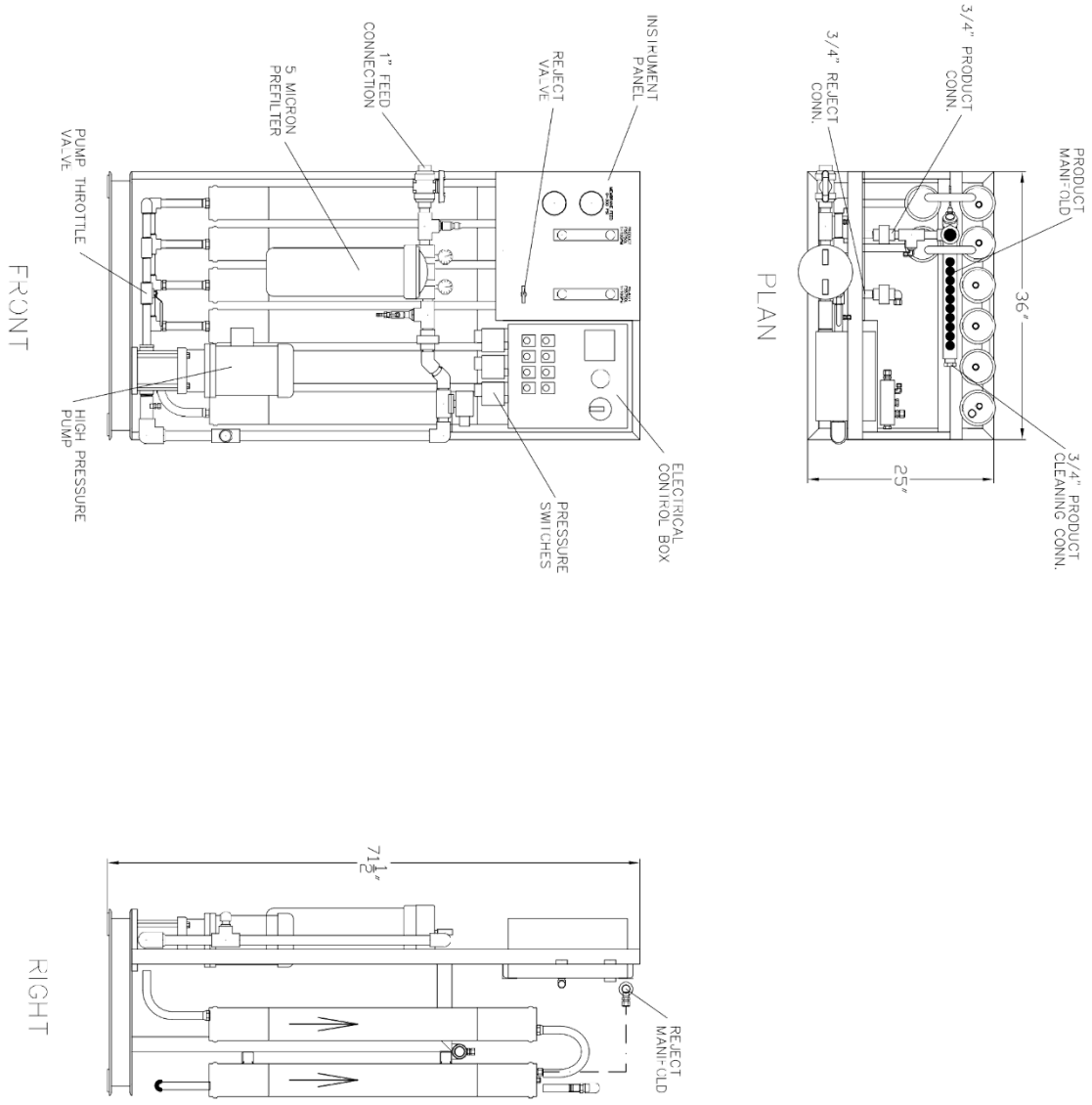

ITT Engineered for life Water Equipment Technologies 580 Village Blvd., Suite 250 West Palm Beach, FL 33409	TITLE: 6.25 GPM RO UNIT LAYOUT	PROJECT: CADDELL 92957	DRAWING NO.: GCC3398-1CRO				
			FILE: flowtronex\3398\mech\3398-1CRO.dgr				
			DESIGN BY: MJM	SCALE: NONE			
			DRAWN BY: SHL	SHEET 1 OF 1			
		APPROVED: DATE:	CHK'D BY: MJM	DATE: 27SEP11	REV	DATE	BY / DESCRIPTION

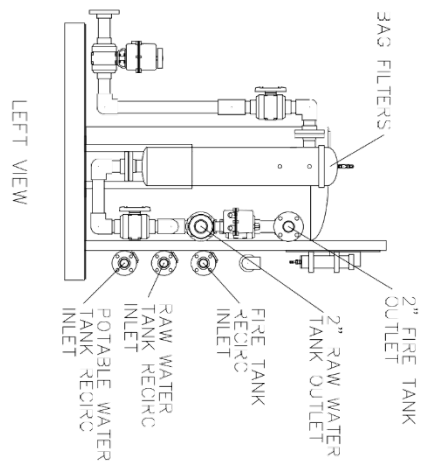

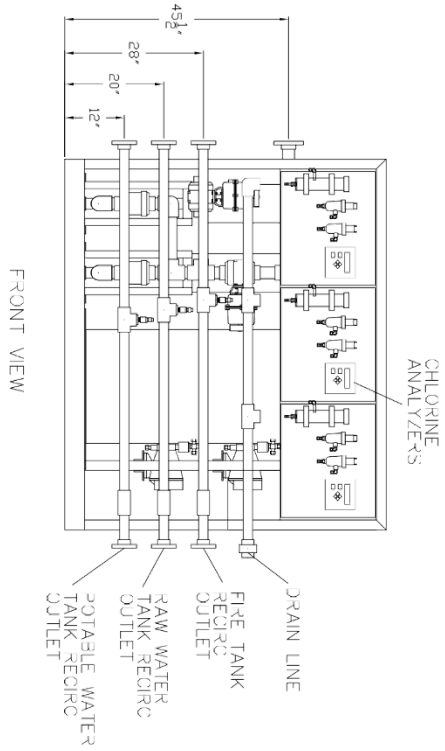

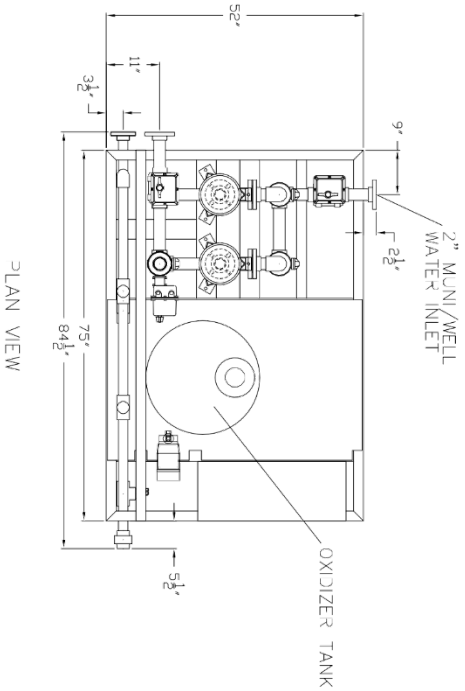

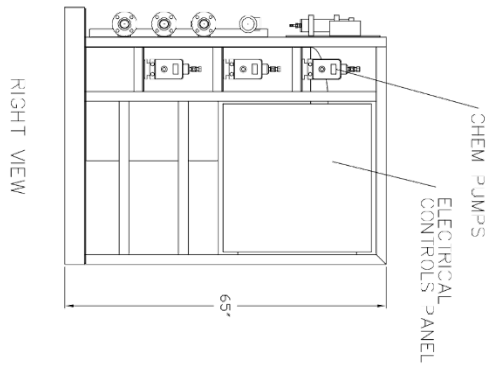

ITT Engineered for life Water Equipment Technologies 580 Village Blvd., Suite 250 West Palm Beach, FL 33409	TITLE	PROJECT	DRAWING NO.				
	6.25 GPM DOMESTIC WATER SYSTEM SKID 1 BAG FILTERS & CHLORINATION	CADDELL 92957	G003398-10S1				
			FILE: flowtronex\3398\mech\3398-10S1.dgn				
			DESIGN BY: MJM	SCALE: NONE			
			DRAWN BY: SHL	SHEET 1 OF 1			
		APPROVED: DATE:	CHK'D BY: MJM	DATE: 22SEP11	REV	DATE	BY / DESCRIPTION

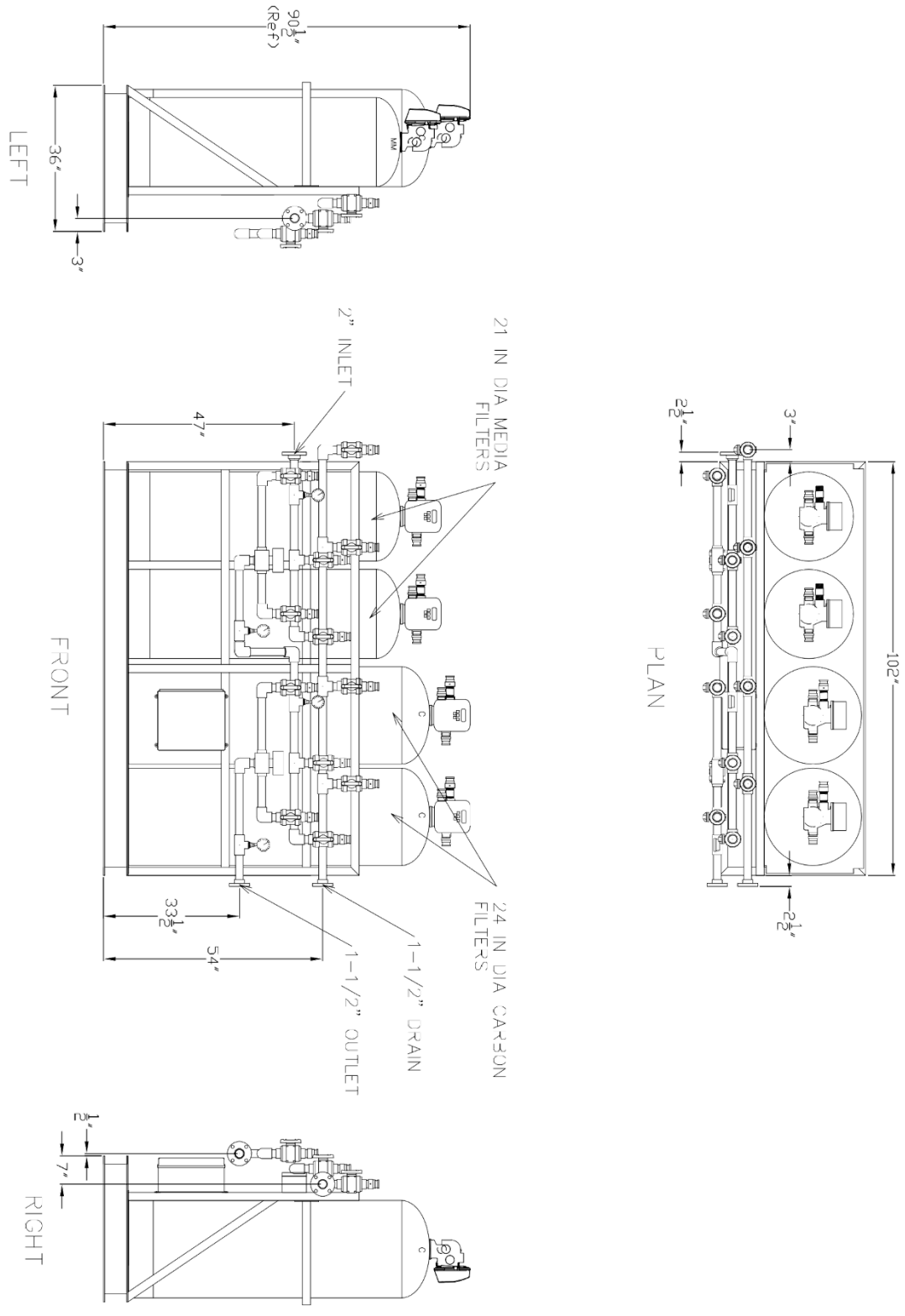

	TITLE	PROJECT	DRAWING NO.				
ITT Engineered for life Water Equipment Technologies 380 Village Blvd., Suite 250 West Palm Beach, FL 33409	6.25 GPM DOMESTIC WATER SYSTEM SKID 2 MEDIA AND CARBON FILTER LAYOUT	CADDELL 92937	G003398-10S2				
			FILE: flowtronex\3398\mech\3398-2.dgn				
			DESIGN BY: MJM	SCALE: NONE			
			DRAWN BY: SHL	SHEET 1 OF 1			
		APPROVED: DATE:	CHK'D BY: MJM	DATE: 23SEP11	REV	DATE	BY

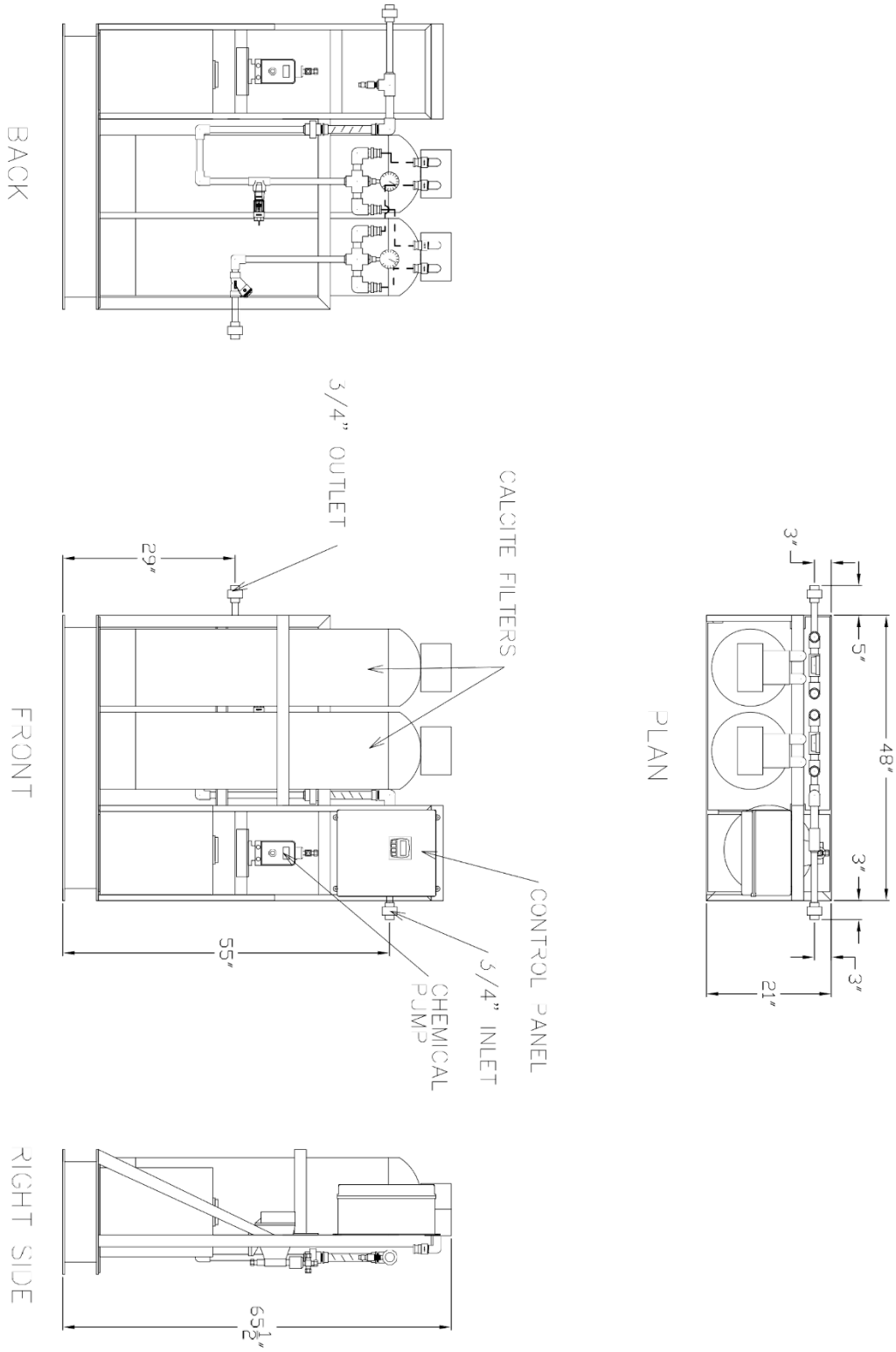

ITT Engineered for life Water Equipment Technologies 580 Village Blvd., Suite 250 West Palm Beach, FL 33409	TITLE	PROJECT	DRAWING NO.				
	6.25 GPM DOMESTIC WATER SYSTEM SKID 5 PH ADJUSTMENT	CADDELL 92937	GCC3398-10S5				
			FILE: flowtronex\3398\mech\3398-10S5.dgr				
			DESIGN BY: MJM	SCALE: NONE			
			DRAWN BY: SHL	SHEET 1 OF 1			
		APPROVED: DATE:	CHK'D BY: MJM	DATE: 23SEP11	REV	DATE	BY

DESCRIPTION

BILL OF MATERIALS

ITEM	QTY	PART #	DESCRIPTION
1	1	07-EL1113PS3030A	ENCLOSURE FRP 30X30X12 4X/IP66/3R
2	1	07-EL1113PS3035	ENCLOSURE PANEL 30X30 W/HINGE
3	1	45-205-4758	BREAKER 25A 3P 480V AB 240-HEC-325
4	1	45-205-1156	HEATER HANDLE OPERATING 2P SHAFT REQ
5	3	07-EL2S140MCEC825	STARTER MANUAL 2/3-5HP480V AB 140M-C2E-B25
6	3	07-EL1890DC62J10	CONTACTOR 3PH 25A 24VDC/2NO AB
7	3	07-EL2S140MCAT40	STARTER MANUAL FAULT/ALRAB
8	1	07-EL19-681	POWER SUPPLY 120/240VAC/24VDC/240W/10 AB
9	1	45-205-4706	BREAKER CIRCUIT 2-POLE 25A C AB
10	2	07-EL25800PHT34P30L	SWITCH 22MM PUSH-TWIST EXT 22MM W/LATCH2
11	1	07-EL25800P1M30P420	SWITCH 3 POS MAINT 2NO W/LATCH AB
12	3	07-EL25800P1M30P430	SWITCH 3 POS MAINT 3NO W/LATCH AB
13	1	07-EL1843BW	INDICATOR AMBER 120VAC
14	1	07-0814763-LRBW6	PLC PROCESSOR AB 2100 I/O/6RS/EA
15	1	07-0814763-DF4	PLC MODULE INPUT ANALOG 4PT HI/200
16	1	07-0814763-OV16	PLC MODULE OUTPUT 24A ATC 200
17	1	07-0814763-OV8	PLC MODULE OUTPUT 8R HI/200
18	1	07-0814763-DA16	PLC MODULE INPT 24VDC 16PT HI/200
19	1	07-EL2080TUT33	ENETR INTERFACE 3VI AMBER/RED HANDLER TBLE
20	1	07-0814CBL389-KITUT200	CABLE 40 PLC - HANDLER
21	24	07-EL700MLT2224	RELAY TERMINAL BLOCK 24VDC 20A DOUBLE AB
22	73		TERMINAL BLOCK
23	23		TERMINAL BLOCK EARTH
24	6		GROUND LUG
25			
26			
27			
28			
29			
30			
31			
32			
33			
34			
35			
36			
37			
38			
39			
40			
41			
42			
43			
44			
45			

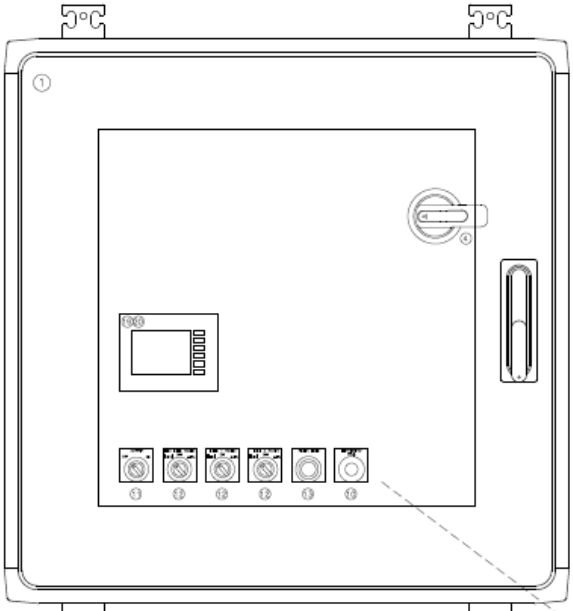

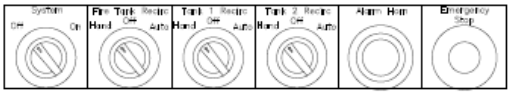

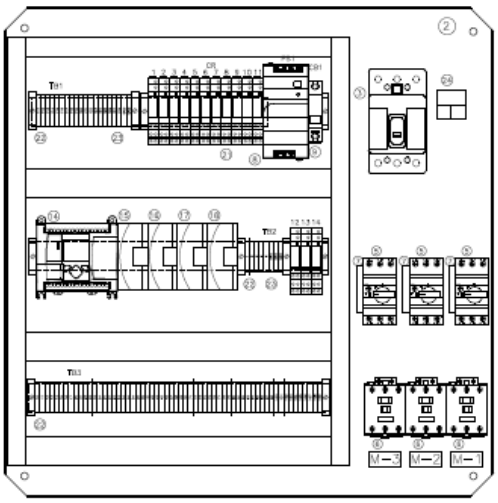

TB1

TB2

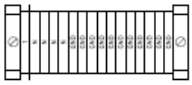

TB3

WIRE COLOR CODE
BLACK (BLK) - POWER 220V OR HIGHER
WHITE (WHT) - NEUTRAL
GREEN (GRN) - GROUND
RED (RED) - AC CONTROL (110 V)
BLUE (BLU) - DC POSITIVE
WHITE/BLUE (W/B) - DC NEGATIVE
YELLOW (YEL) - EXTERNAL SOURCE

CONFIDENTIAL INFORMATION. NOT TO BE DUPLICATED OR USED WITHOUT THE PERMISSION OF ITT- GOULDS WATER TECHNOLOGY UNIT

ITT
Engineered for life
Water Equipment Technologies
500 Village Blvd., Suite 250
West Palm Beach, FL 33409

TITLE	PROJECT	DRAWING NO.
6.25 GPM DOMESTIC WATER TREATMENT ELECTRICAL	CADDELL 92937	G003398-3

FILE: cad\electrical\G003398-3.dwg
DESIGN BY: MJV | SCALE: NONE
DRAWN BY: MJV | SHEET 1 OF 8
CHKD BY: ___ | DATE: 18APR11
APPROVED: | DATE:

REV	DATE	BY	DESCRIPTION
C	10AUG11	VN	PREPARED FOR PRODUCTION
B	05MAY11	MJV	CR 3,4,5 CONTACTS ADDED
A	21APR11	MJV	TANK VALVES ADDED

NOTE: ALL ELECTRICAL DEVICES MUST BE GROUNDED.

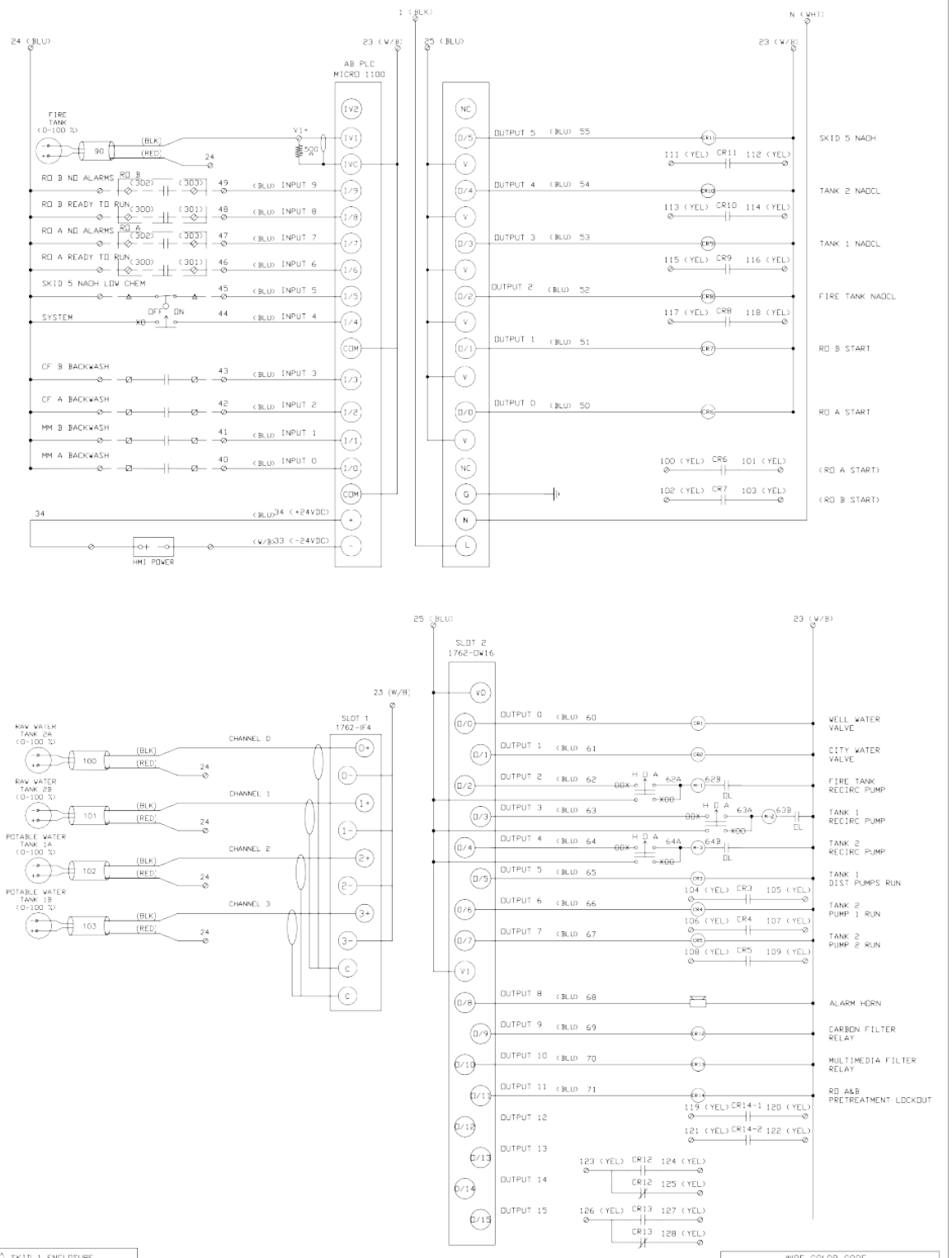

SKID 1 ENCLOSURE
SKID 2 ENCLOSURE
SKID 5 ENCLOSURE
RO A & B ENCLOSURE

WIRE COLOR CODE
BLACK (BLK) - POWER 220V OR HIGHER
WHITE (WHT) - NEUTRAL
GREEN (GRN) - GROUND
RED (RED) - AC CONTROL
BLUE (BLU) - DC POSITIVE
WHITE W/BLUE (W/B) - DC NEGATIVE
YELLOW (YEL) - EXTERNAL SOURCE

CONFIDENTIAL INFORMATION. NOT TO BE DUPLICATED OR USED WITHOUT THE PERMISSION OF ITT- WATER EQUIPMENT TECHNOLOGIES UNIT

ITT Engineered for life
3610 Quantum Blvd
Boynton Beach, FL 33426

TITLE	PROJECT	DRAWING NO.
6.25 GPM DOMESTIC WATER TREATMENT ELECTRICAL	CADDELL 92937	G003398-3

FILE: G003398-3.dwg
DESIGN BY: MJV | SCALE: NONE
DRAWN BY: MJV | SHEET 2 OF 8
APPROVED: | DATE: | CHK'D BY: ___ | DATE: 18APR11

REV	DATE	BY	DESCRIPTION
C	10AUG11	VN	PREPARED FOR PRODUCTION
B	05MAY11	MJV	CR 3,4,5 CONTACTS ADDED
A	21APR11	MJV	TANK VALVES ADDED

NOTE: ALL ELECTRICAL DEVICES MUST BE GROUNDED.

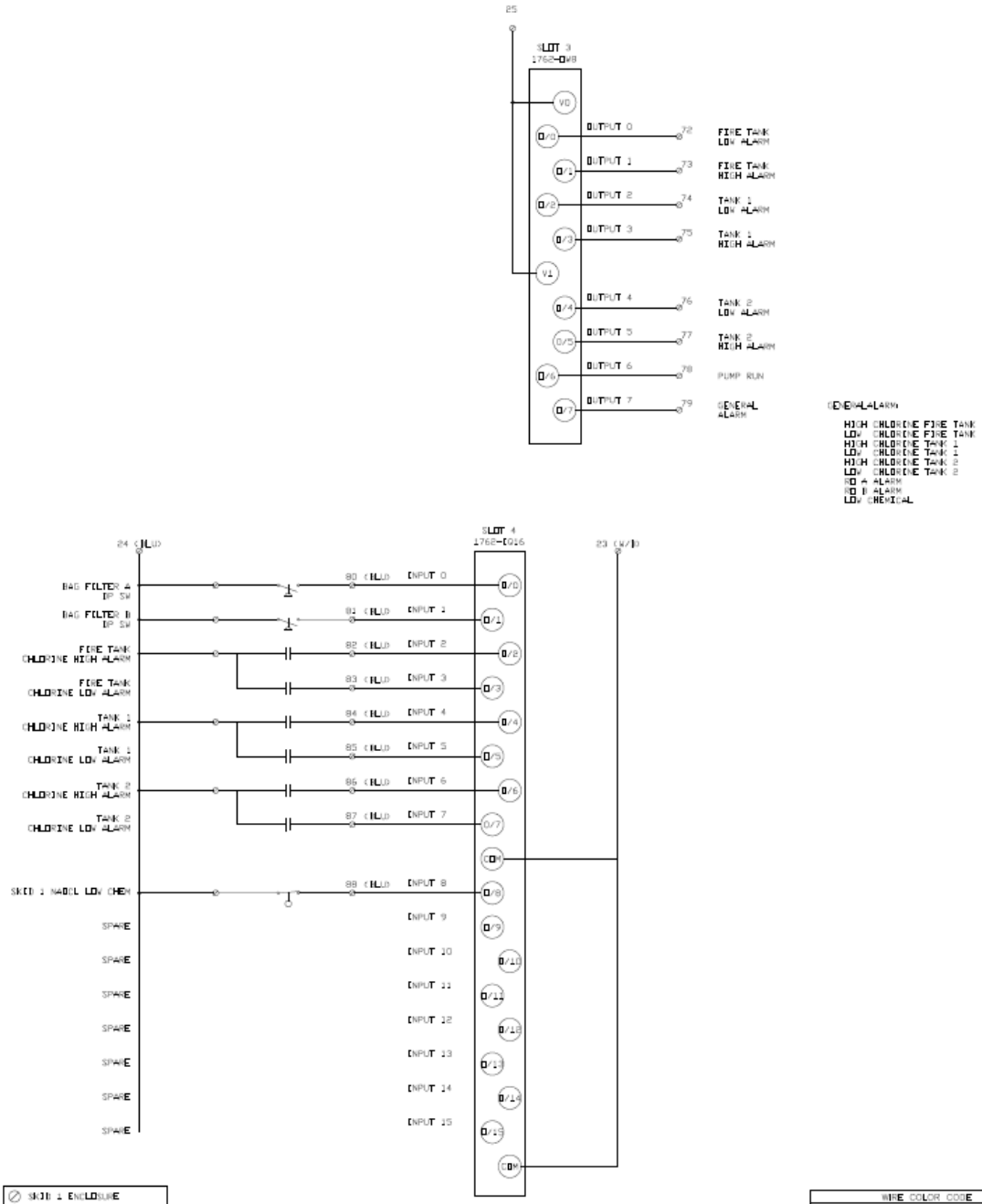

WIRE COLOR CODE
BLACK (BLU) - POWER 220V OR HIGHER
WHITE (WHT) - NEUTRAL
GREEN (GRN) - GROUND
RED (RED) - AC CONTROL
BLUE (BLU) - DC POSITIVE
WHITE W/BLUE (W/B) - DC NEGATIVE
YELLOW (YEL) - EXTERNAL SOURCE

CONFIDENTIAL INFORMATION. NOT TO BE DUPLICATED OR USED WITHOUT THE PERMISSION OF ITT- WATER EQUIPMENT TECHNOLOGIES UNIT

ITT
Engineered for life
3610 Quantum Blvd
Boynton Beach, FL 33426

TITLE	PROJECT	DRAWING NO.
6.25 GPM DOMESTIC WATER TREATMENT ELECTRICAL	CADDELL 92937	G003398-3

FILE: G003398-3.dwg
DESIGN BY: MJV | SCALE: NONE
DRAWN BY: MJV | SHEET 3 OF 8
APPROVED: | DATE: | CHK'D BY: ___ | DATE: 18APR11

REV	DATE	BY	DESCRIPTION
B	10AUG11	VN	PREPARED FOR PRODUCTION
A	21APR11	MJV	TANK VALVES ADDED

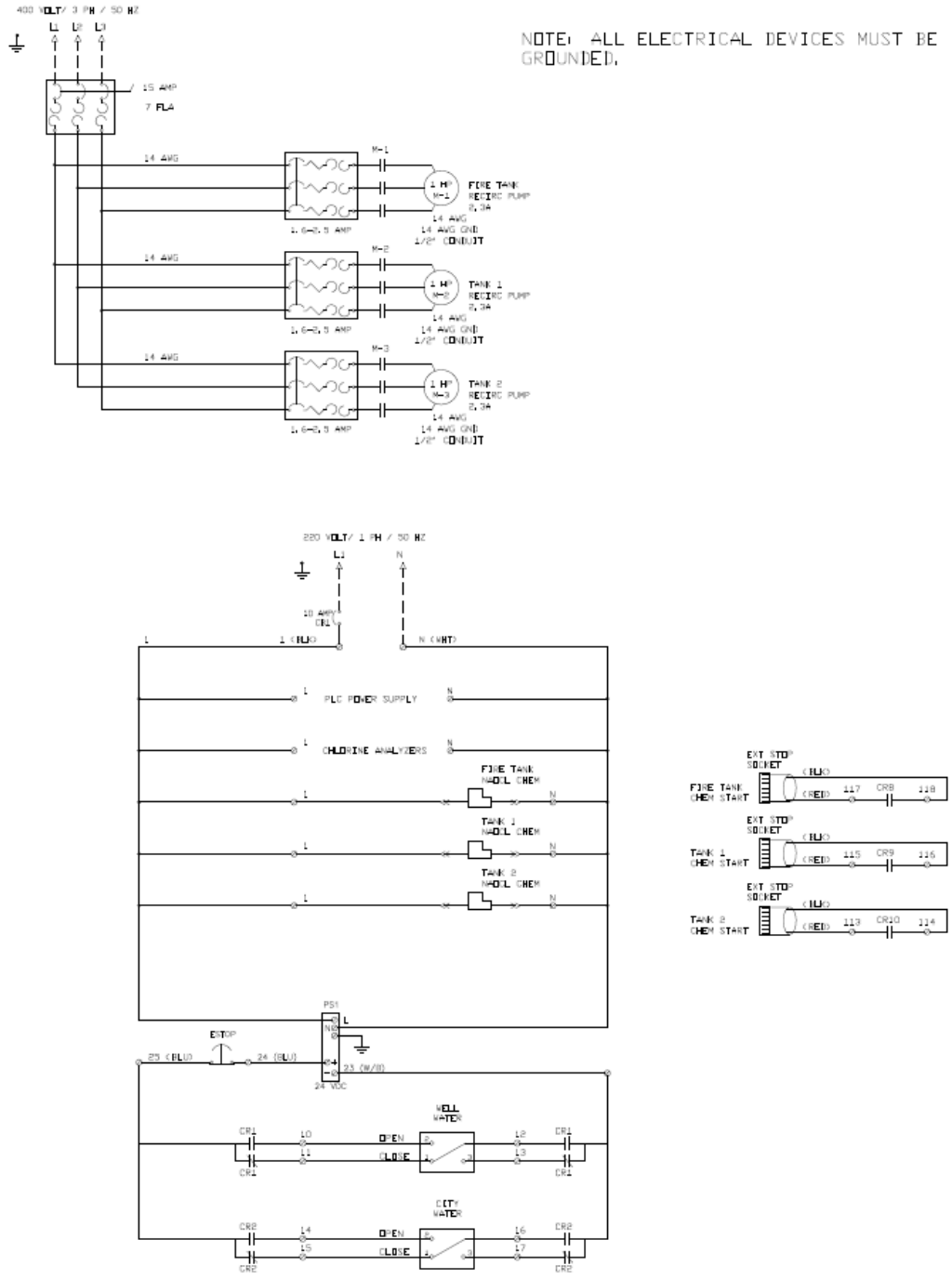

NOTE: ALL ELECTRICAL DEVICES MUST BE GROUNDED.

SKID 1 ENCLOSURE
SKID 2 ENCLOSURE
SKID 5 ENCLOSURE
RO A & B ENCLOSURE

WIRE COLOR CODE
BLACK (BLK) - POWER 220V OR HIGHER
WHITE (WHT) - NEUTRAL
GREEN (GRN) - GROUND
RED (RED) - AC CONTROL
BLUE (BLU) - DC POSITIVE
WHITE W/BLUE (W/B) - DC NEGATIVE
YELLOW (YEL) - EXTERNAL SOURCE

CONFIDENTIAL INFORMATION. NOT TO BE DUPLICATED OR USED WITHOUT THE PERMISSION OF ITT- WATER EQUIPMENT TECHNOLOGIES UNIT

ITT
Engineered for life
3610 Quantum Blvd
Boynton Beach, FL 33426

TITLE	PROJECT	DRAWING NO.
6.25 GPM DOMESTIC WATER TREATMENT ELECTRICAL	CADDELL 92937	G003398-3

FILE: G003398-3.dwg
DESIGN BY: MJV | SCALE: NONE
DRAWN BY: MJV | SHEET 4 OF 8
APPROVED: | DATE:
CHK'D BY: ___ | DATE: 18APR11

REV	DATE	BY	DESCRIPTION
C	08AUG11	VN	PREPARED FOR PRODUCTION
B	05MAY11	MJV	CR 3,4,5 CONTACTS ADDED
A	21APR11	MJV	TANK VALVES ADDED

NOTE: ALL ELECTRICAL DEVICES MUST BE GROUNDED.

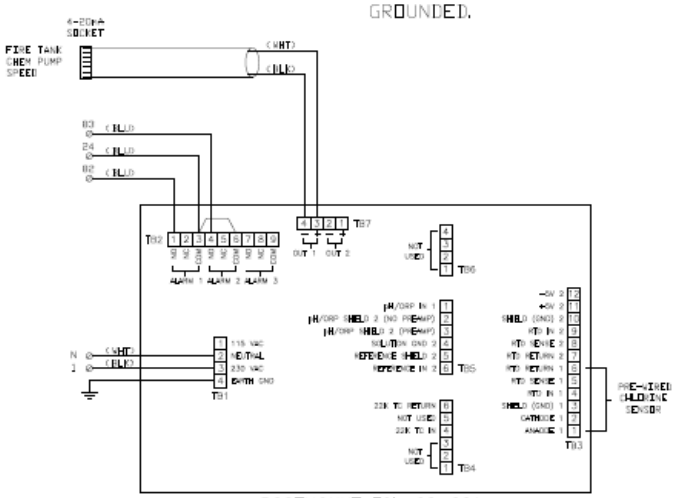

ROSEMOUNT FCL-02-221

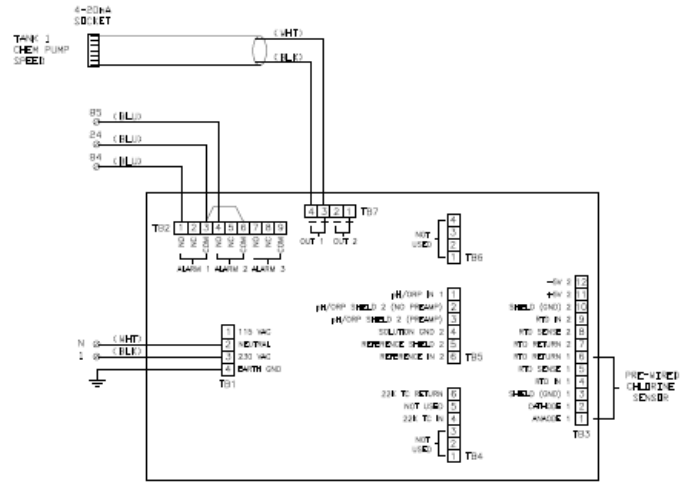

ROSEMOUNT FCL-02-221

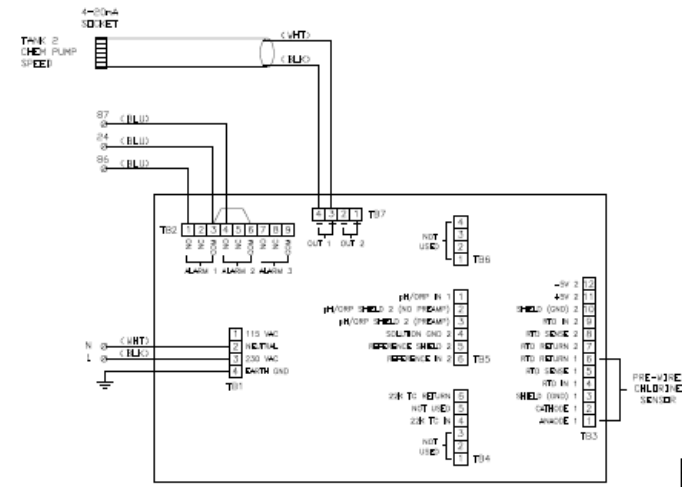

ROSEMOUNT FCL-02-221

SKID 1 ENCLOSURE
SKID 2 ENCLOSURE
SKID 5 ENCLOSURE
RO A & B ENCLOSURE

WIRE COLOR CODE
BLACK (BLK) - POWER 220V OR HIGHER
WHITE (WHT) - NEUTRAL
GREEN (GRN) - GROUND
RED (RED) - AC CONTROL
BLUE (BLU) - DC POSITIVE
WHITE W/BLUE (W/B) - DC NEGATIVE
YELLOW (YEL) - EXTERNAL SOURCE

CONFIDENTIAL INFORMATION - NOT TO BE DISCLOSED OR USED WITHOUT THE PERMISSION OF ITT- WATER EQUIPMENT TECHNOLOGIES, INC.

ITT
Engineered for life
5619 Quantum Blvd
Boynton Beach, FL 33426

TITLE	PROJECT	DRAWING NO.
6.25 GPM DOMESTIC WATER TREATMENT ELECTRICAL	CADDELL 92937	G003398-3

FILE: G003398-3.dwg
DESIGN BY: MJV | SCALE: NONE
DRAWN BY: MJV | SHEET 5 OF 8
APPROVED: | DATE:
CHK'D BY: ___ | DATE: 18APR11

REV	DATE	BY	DESCRIPTION
C	10AUG11	VN	PREPARED FOR PRODUCTION
B	05MAY11	MJV	CR 3,4,5 CONTACTS ADDED
A	21APR11	MJV	TANK VALVES ADDED

BILL OF MATERIALS

ITEM	QTY	PART #	DESCRIPTION
1	1	09-ELV4X2.25H.NSCPD	ENCLOSURE FRP 16X14
2	1	09-ELVBLK-PNL4	ENCLOSURE PANEL 16X14
3	1	09-EL1489M2-N060	BREAKER CIRCUIT 2-POLE 60A C AB
4	42		TERMINALS
5	2		TERMINAL GROUND
6	4	78-000-124	RECEPTACLE DUPLEX 125V 15A 5-20R
7			
8			
9			
10			
11			
12			
13			
14			
15			
16			
17			
18			
19			
20			
21			
22			
23			
24			
25			
26			
27			
28			
29			
30			

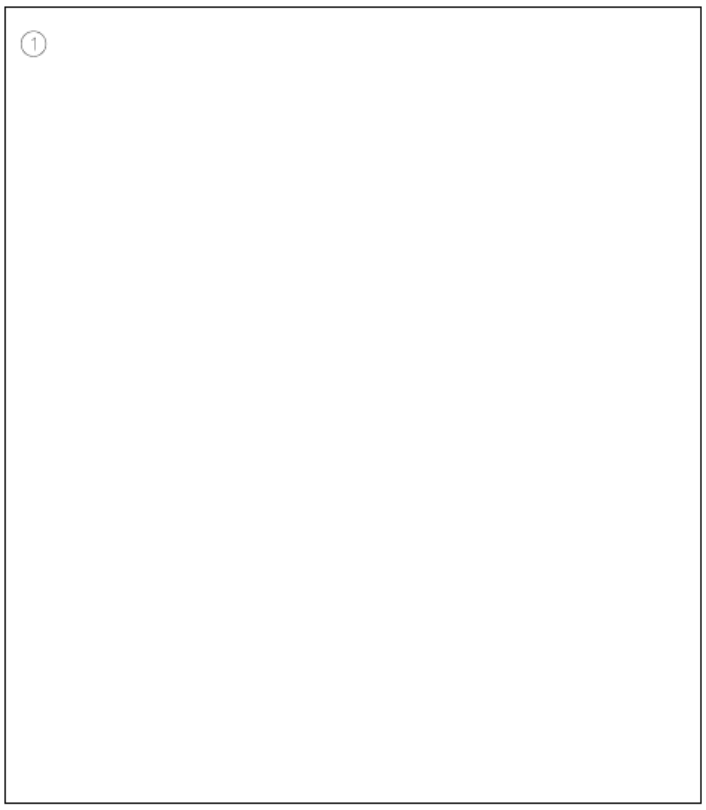

SKID 2 ENCLOSURE – QTY. 1

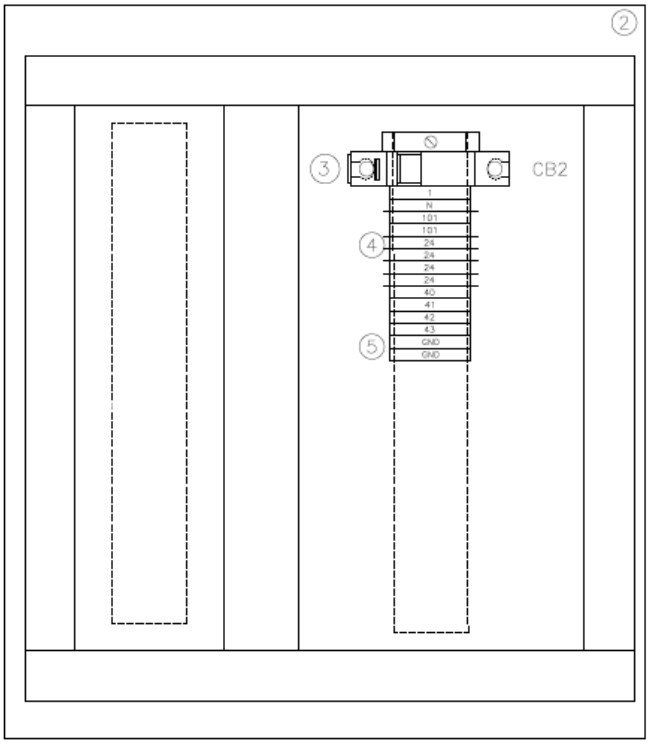

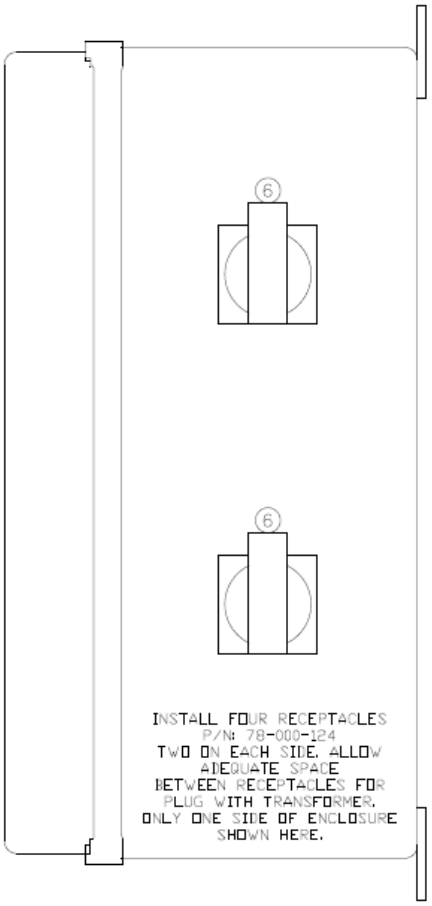

WIRE COLOR CODE
BLACK (BLK) – POWER 208V OR HIGHER
WHITE (WHT) – NEUTRAL
GREEN (GRN) – GROUND
RED (RED) – AC CONTROL
BLUE (BLU) – DC POSITIVE
WHITE W/BLUE (W/B) – DC NEGATIVE
YELLOW (YEL) – EXTERNAL SOURCE

CONFIDENTIAL INFORMATION - NOT TO BE DUPLICATED OR USED WITHOUT THE PERMISSION OF ITT- WHEN EXHIBIT TECHNOLOGIES UNIT

ITT
Engineered for life

2610 Quantum Blvd
Boynton Beach, FL 33426

TITLE	PROJECT	DRAWING NO.
6.25 GPM DOMESTIC WATER TREATMENT ELECTRICAL	CADDELL 92937	G003398-3

FILE: G003398-3.dwg
DESIGN BY: MJV
DRAWN BY: MJV
CHK'D BY: ___
APPROVED: DATE
SCALE: NONE
SHEET 6 OF 8
DATE: 18APR11

REV	DATE	BY	DESCRIPTION
C	10AUG11	MN	PREPARED FOR PRODUCTION
B	05MAY11	MJV	CR 3,4,5 CONTACTS ADDED
A	21APR11	MJV	TANK VALVES ADDED

BILL OF MATERIALS

ITEM	QTY	PART #	DESCRIPTION
1	1	37-ELDAS1AR0604PT0	ENCLOSURE FRP 24X24
2	1	37-ELDAS2SP24	ENCLOSURE PANEL 24X24
3	1	37-ELDAS1AB0601055	BREAKER CIRCUIT CABLE 60A C HR
4	20		TERMINALS
5	2		TERMINAL GROUND
6	1	37-PMM1-8750-0P	TRANSMITTER PRODEX SUBSET 8750 PNL
7			
8			
9			
10			
11			
12			
13			
14			
15			
16			
17			
18			
19			
20			
21			
22			
23			
24			
25			
26			
27			
28			
29			
30			

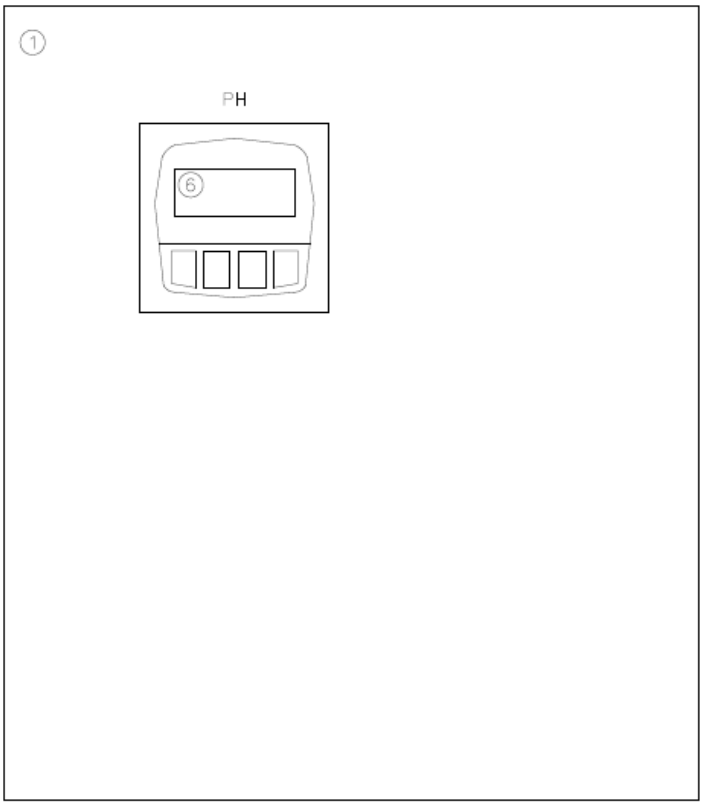

SKID 5 ENCLOSURE – QTY. 1

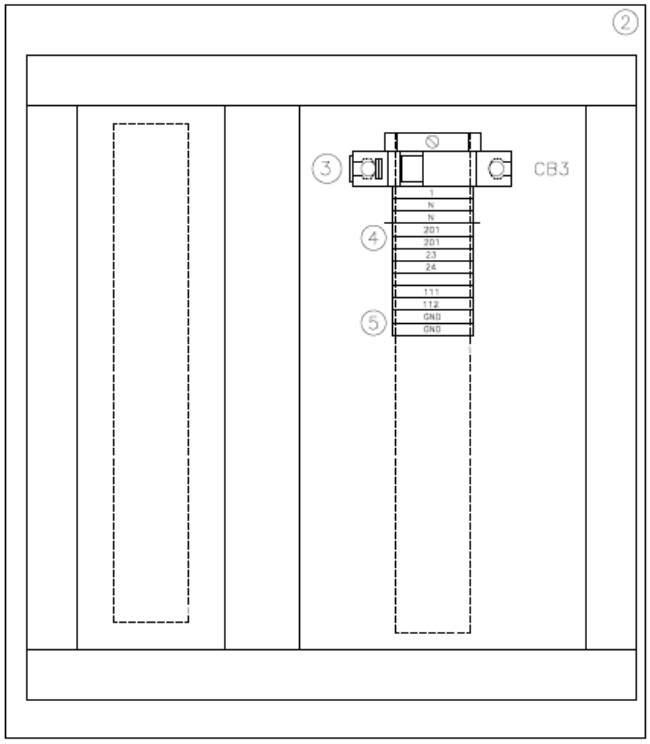

WIRE COLOR CODE
BLACK (BLK) – POWER 220V OR HIGHER
WHITE (WHT) – NEUTRAL
GREEN (GRN) – GROUND
RED (RED) – AC CONTROL
BLUE (BLU) – DC POSITIVE
WHITE W/BLUE (W/B) – DC NEGATIVE
YELLOW (YEL) – EXTERNAL SOURCE

CONFIDENTIAL INFORMATION. NOT TO BE DISCLOSED OR USED WITHOUT THE PERMISSION OF ITT- ENGINEERED SYSTEMS UNIT

ITT
Engineered for life
3610 Quantum Blvd
Boynton Beach, FL 33426

TITLE	PROJECT	DRAWING NO.
6.25 GPM DOMESTIC WATER TREATMENT ELECTRICAL	CADDELL 92937	G003398-3

FILE: G003398-3.dwg
DESIGN BY: MJV | SCALE: NONE
DRAWN BY: MJV | SHEET 7 OF 8
APPROVED: | DATE:
CHK'D BY: ___ | DATE: 18APR11

REV	DATE	BY	DESCRIPTION
C	10AUG11	VN	PREPARED FOR PRODUCTION
B	05MAY11	MJV	DR 3,4,5 CONTACTS ADDED
A	21APR11	MJV	TANK VALVES ADDED

NOTE: ALL ELECTRICAL DEVICES MUST BE GROUNDED.

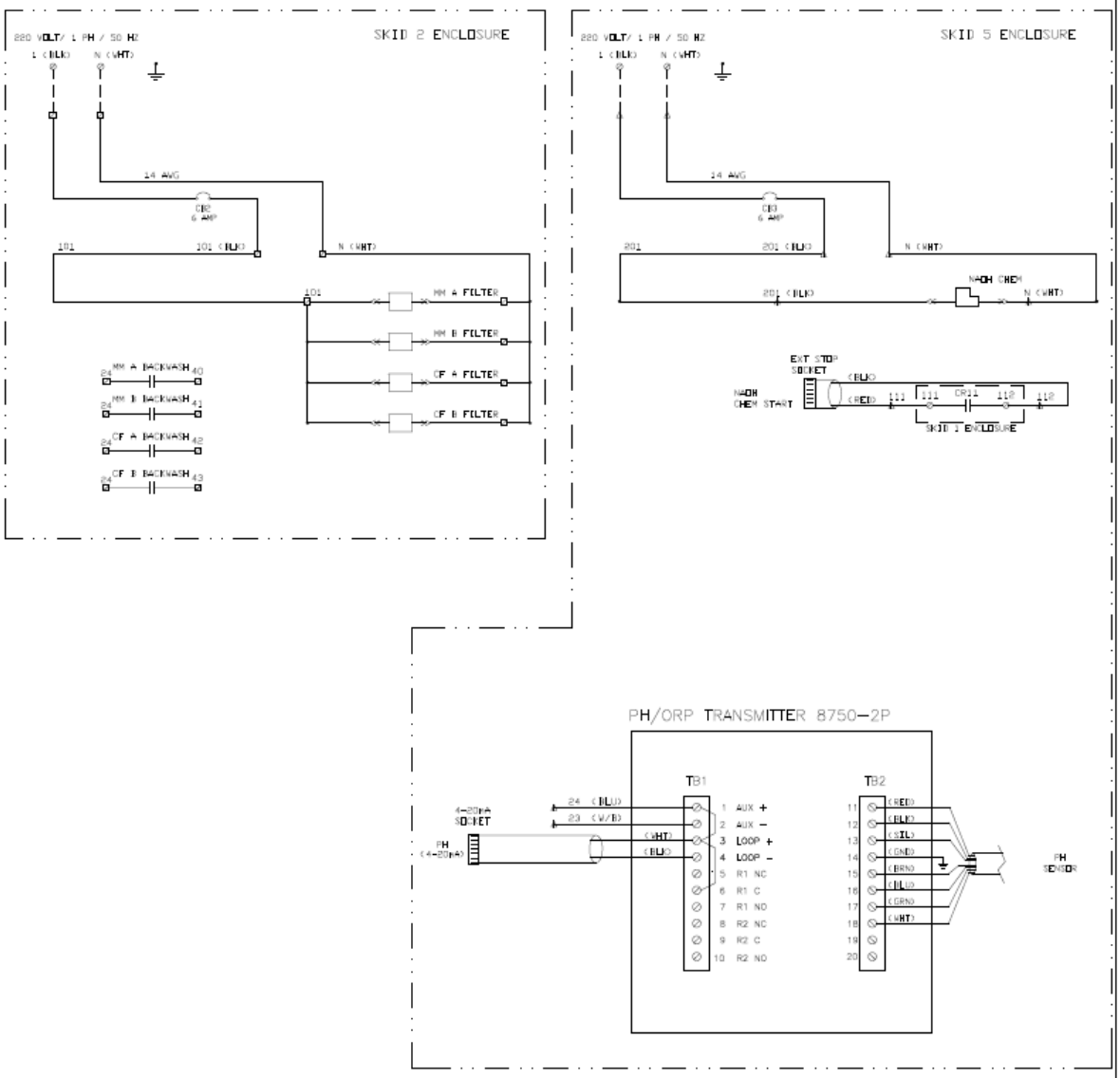

- SKID 1 ENCLOSURE
- SKID 2 ENCLOSURE
- SKID 5 ENCLOSURE
- RO A & B ENCLOSURE

WIRE COLOR CODE
BLACK (BLK) - POWER 220V OR HIGHER
WHITE (WHT) - NEUTRAL
GREEN (GRN) - GROUND
RED (RED) - AC CONTROL
BLUE (BLU) - DC POSITIVE
WHITE W/BLUE (W/B) - DC NEGATIVE
YELLOW (YEL) - EXTERNAL SOURCE

PROPRIETARY INFORMATION - NOT TO BE DISCLOSED OR USED WITHOUT THE PERMISSION OF ITT- WATER EQUIPMENT TECHNOLOGIES, INC.

ITT
Engineered for life
3610 Quantum Blvd
Boynton Beach, FL 33426

TITLE	PROJECT	DRAWING NO.
6.25 GPM DOMESTIC WATER TREATMENT ELECTRICAL	CADDELL 92937	G003398-3

FILE G003398-3.dwg
DESIGN BY: MJV
DRAWN BY: MJV
CHKD BY: ___
APPROVED: DATE
SCALE NONE
SHEET 8 OF 8
DATE 18APR11

REV	DATE	BY	DESCRIPTION
C	10AUG11	MN	PREPARED FOR PRODUCTION
B	05MAY11	MJV	CR 3,4,5 CONTACTS ADDED
A	21APR11	MJV	TANK VALVES ADDED

Model Number	6.25 GPM DOMESTIC		
Serial Number	G003398-S1		
Voltage	400	SCCR	5KA
Phase	3	FLA	7
Hz	50	Max HP	1

Model Number	6.25 GPM DOMESTIC		
Serial Number	G003398-S2		
Voltage	240	SCCR	5KA
Phase	1	FLA	5
Hz	50	Max HP	N/A

Model Number	6.25 GPM DOMESTIC		
Serial Number	G003398-S5		
Voltage	240	SCCR	5KA
Phase	1	FLA	5
Hz	50	Max HP	N/A

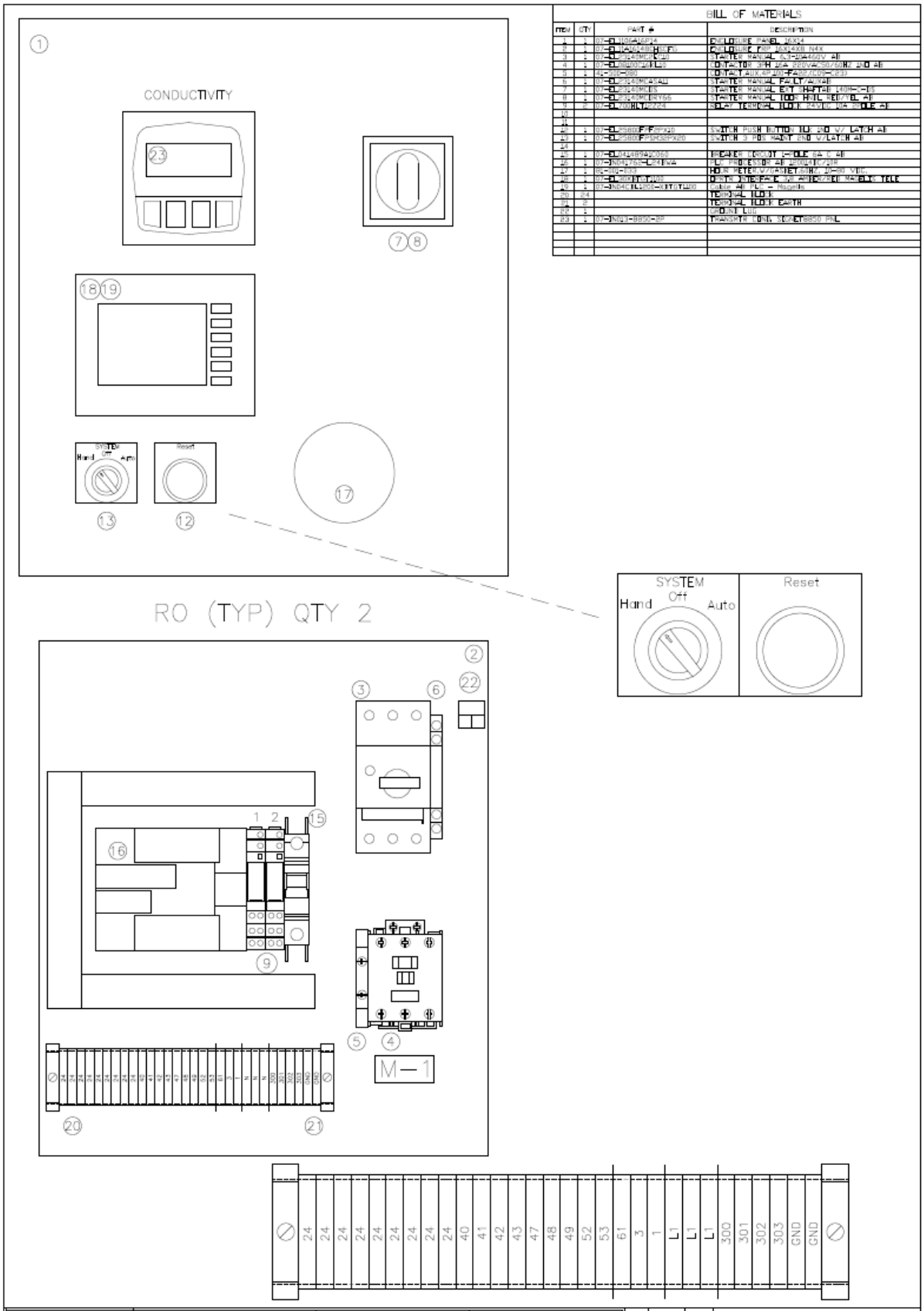

BILL OF MATERIALS

ITEM	QTY	PART #	DESCRIPTION
1	1	07-EL3054A2PT4	ENCLOSURE PANEL 30X24
2	1	07-EL3024A2HSCFD	ENCLOSURE 24X30 W/X 24X8 N4X
3	1	07-EL2549MEPM2D	STARTER MANUAL 6.3-10A460V AB
4	1	07-EL2825DP2TL25	CONTACTOR 3PH 25A 220V/AC50/60HZ 2ND AB
5	1	42-CHP-4980	CONTACT AUX,4P,2NO-F402,1CO-F230
6	1	07-EL2549MCPSAU	STARTER MANUAL FACTORY AB
7	1	07-EL2549MEDS	STARTER MANUAL EXT SHAFT 140M-C-DS
8	1	07-EL2549MEDRY56	STARTER MANUAL TOOL FREE REMOVAL AB
9	6	07-EL700HLT227R4	RELAY TERMINAL TOOL 24VDC DIA 700E AB
10			
11			
12	1	07-EL9580PFPRP20	SWITCH PUSH BUTTON 16D 2ND W/ LATCH AB
13	1	07-EL9580PFSM3PX20	SWITCH 3 POS MAINT 2ND W/LATCH AB
14			
15	1	07-EL0414BPA2060	BREAKER CIRCUIT C-60E 6A C AB
16	1	07-ND4176R-C24EWA	PLC PROCESSOR AB 2080LC70/24R
17	1	42-CHD-8238	HORN METER,V/O/ARMETER,MAX 2A-30 VDC
18	1	07-EL2800MTDJ10E	DISPLAY INTERFACE,2.8" ATEX/HAZ MAT ELEC TELE
19	1	07-ND4EBL2080-KITV1J20	Cable AB PLC - Magentis
20	#4		TERMINAL BLOCK
21	6		TERMINAL BLOCK EARTH
22	1		CONDUIT LUG
23	1	07-ND23-8850-BP	TRANSMTR CONN, SOCKET8850 PNL

ITT
Engineered for life
Water Equipment Technologies
350 Village Blvd., Suite 230
West Palm Beach, FL 33409

TITLE	PROJECT	DRAWING NO.
6.25 GPM REVERSE OSMOSIS ELECTRICAL	CADDELL 92937	G003398-3RO

FILE: G003398-3.dwg
DESIGN BY: JWR — SCALE: NONE
DRAWN BY: MJV — SHEET 1 OF 2
CHK'D BY: ___ — DATE: 18APR11
APPROVED: ___ DATE: ___

REV	DATE	BY	DESCRIPTION
C	10AUG11	VN	PREPARED FOR PRODUCTION
B	09MAY11	MJV	CR 3, 4, 5 CONTACTS ADDED
A	21APR11	MJV	TANK VALVES ADDED

NOTE:
DISCONNECTS PROVIDED BY OTHERS.
ALL ELECTRICAL DEVICES MUST BE GROUNDED.

RO (TYP) QTY 2

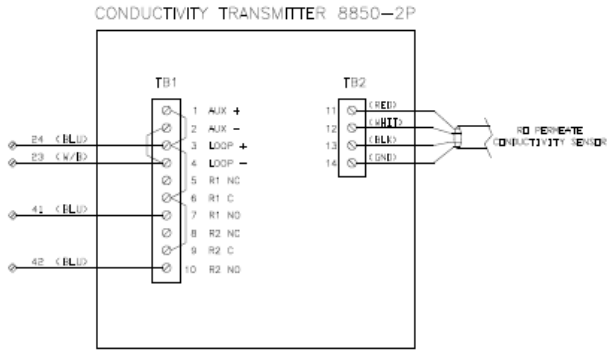

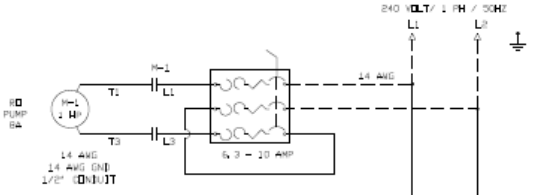

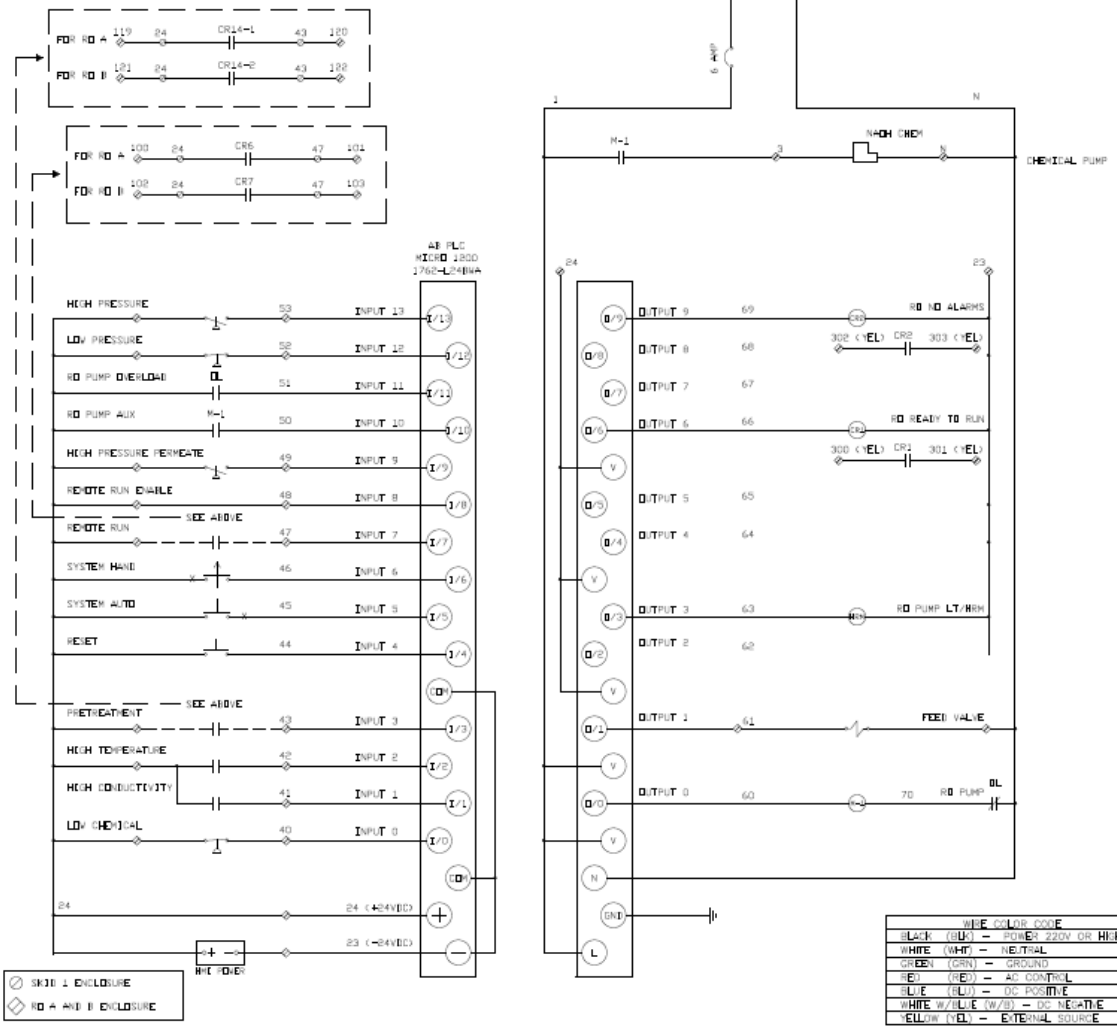

WIRE COLOR CODE
BLACK (BLK) – POWER 220V OR HIGHER
WHITE (WHT) – NEUTRAL
GREEN (GRN) – GROUND
RED (RED) – AC CONTROL
BLUE (BLU) – DC POSITIVE
WHITE W/BLUE (W/B) – DC NEGATIVE
YELLOW (YEL) – EXTERNAL SOURCE

ITT
Engineered for life
2619 Quantum Blvd
Boynton Beach, FL 33426

TITLE	PROJECT	DRAWING NO.
6.25 GPM REVERSE OSMOSIS ELECTRICAL	CADDELL 92937	G003398-3RO
APPROVED:	DATE:	FILE: G003398-3.dwg
		DESIGN BY: JWR — SCALE: NONE
		DRAWN BY: MJV — SHEET 2 OF 2
		CHKD BY: ___ — DATE: 08APR11

REV	DATE	BY	DESCRIPTION
C	10AUG11	MJV	PREPARED FOR PRODUCTION
B	09MAY11	MJV	CR 3,4,5 CONTACTS ADDED
A	21APR11	MJV	TANK VALVES ADDED

Model Number	6.25 GPM		
Serial Number	G003398-S3		
Voltage	220	SCCR	5KA
Phase	1	FLA	12
Hz	50	Max HP	1

NOTE:

There are (2) RO units on this project.
These drawings will need to be duplicated
for the second unit G003398-S4.

7.2 PLANT PHOTOS

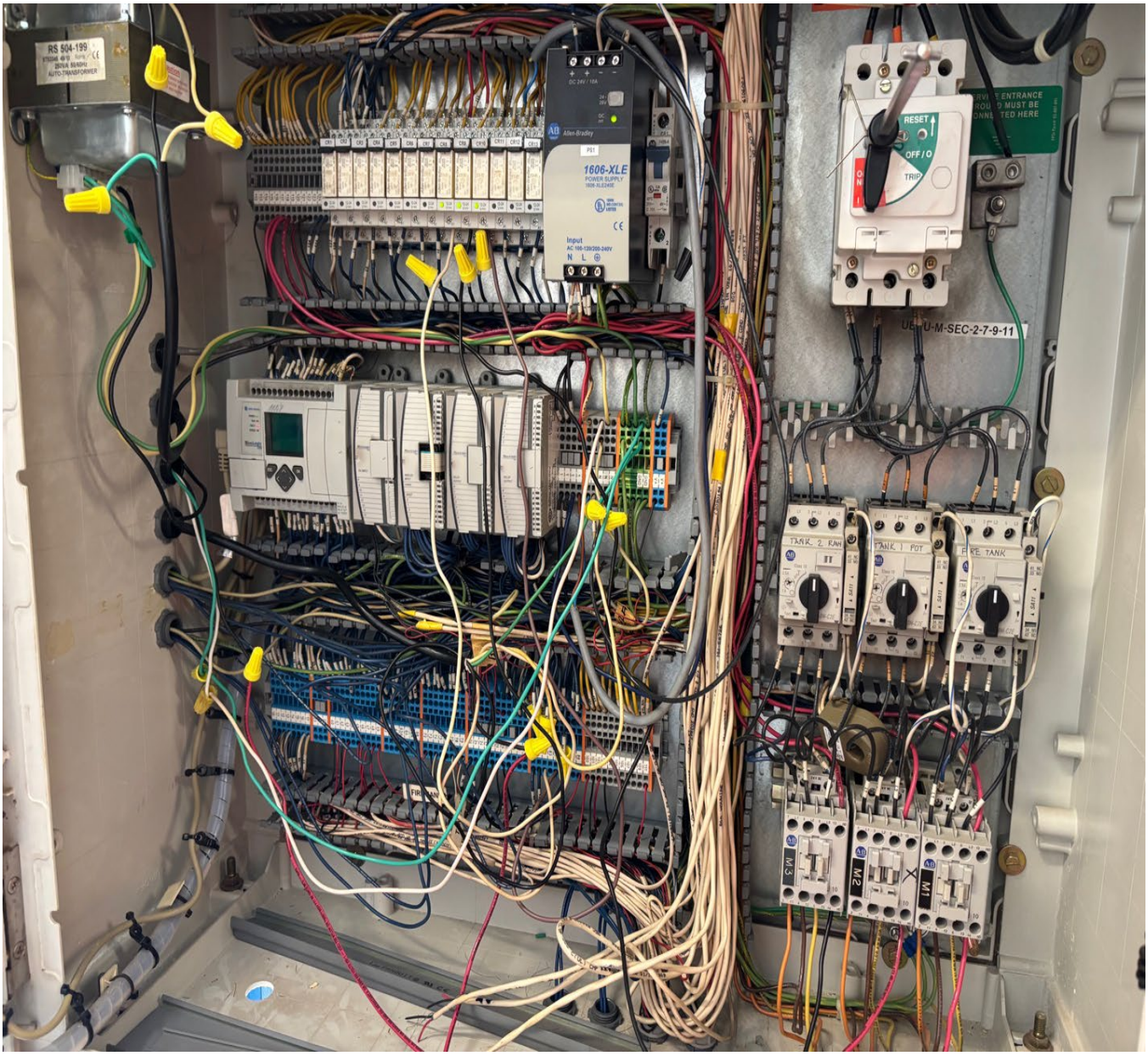

Figure 2.0 Main PLC Cabinet

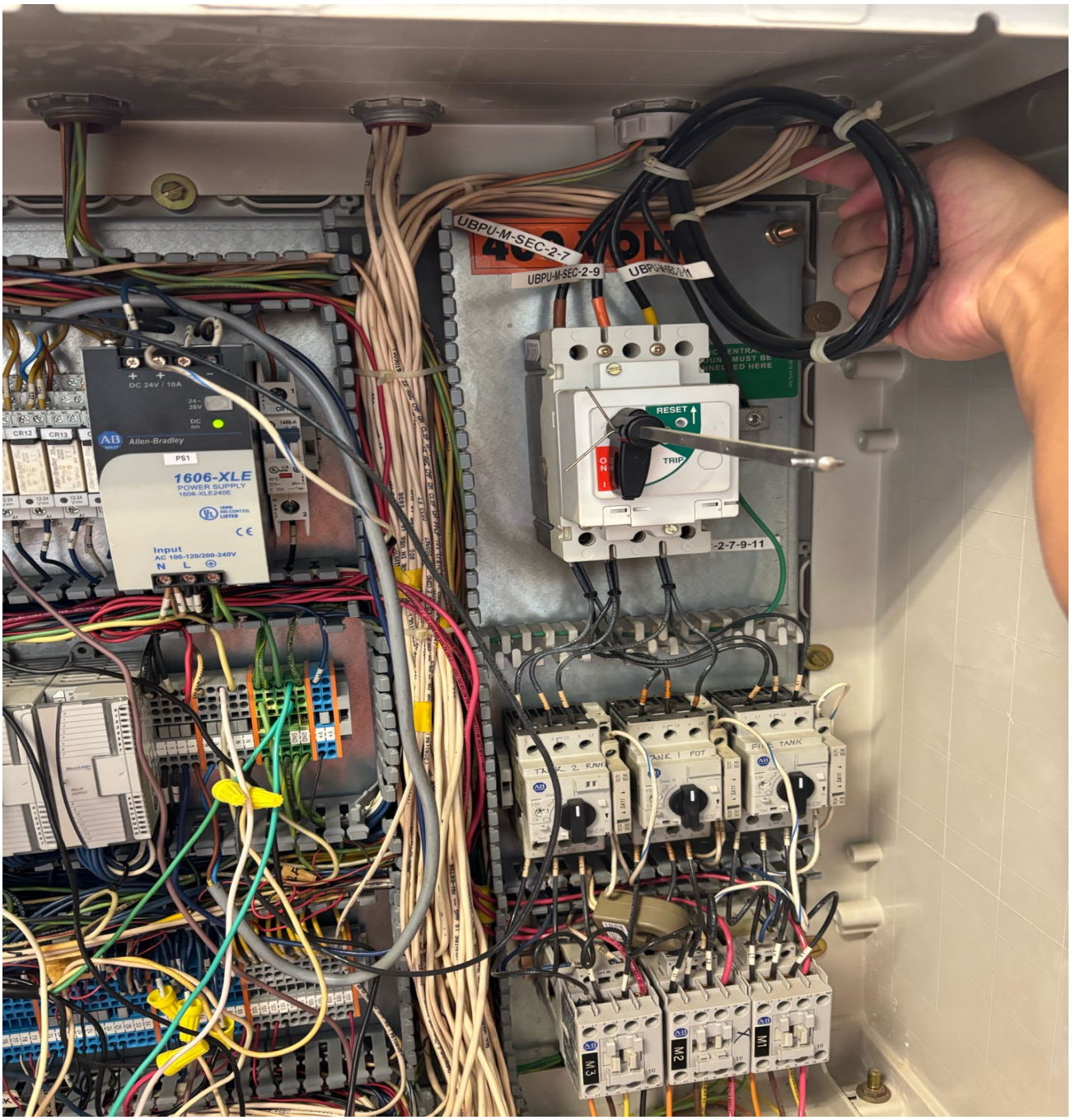

Figure 3.0 Points coming from RO Panels to Main Panel

Figure 4.0 RO Panels

Figure 5.0 All 5 Panels in Potable Plant

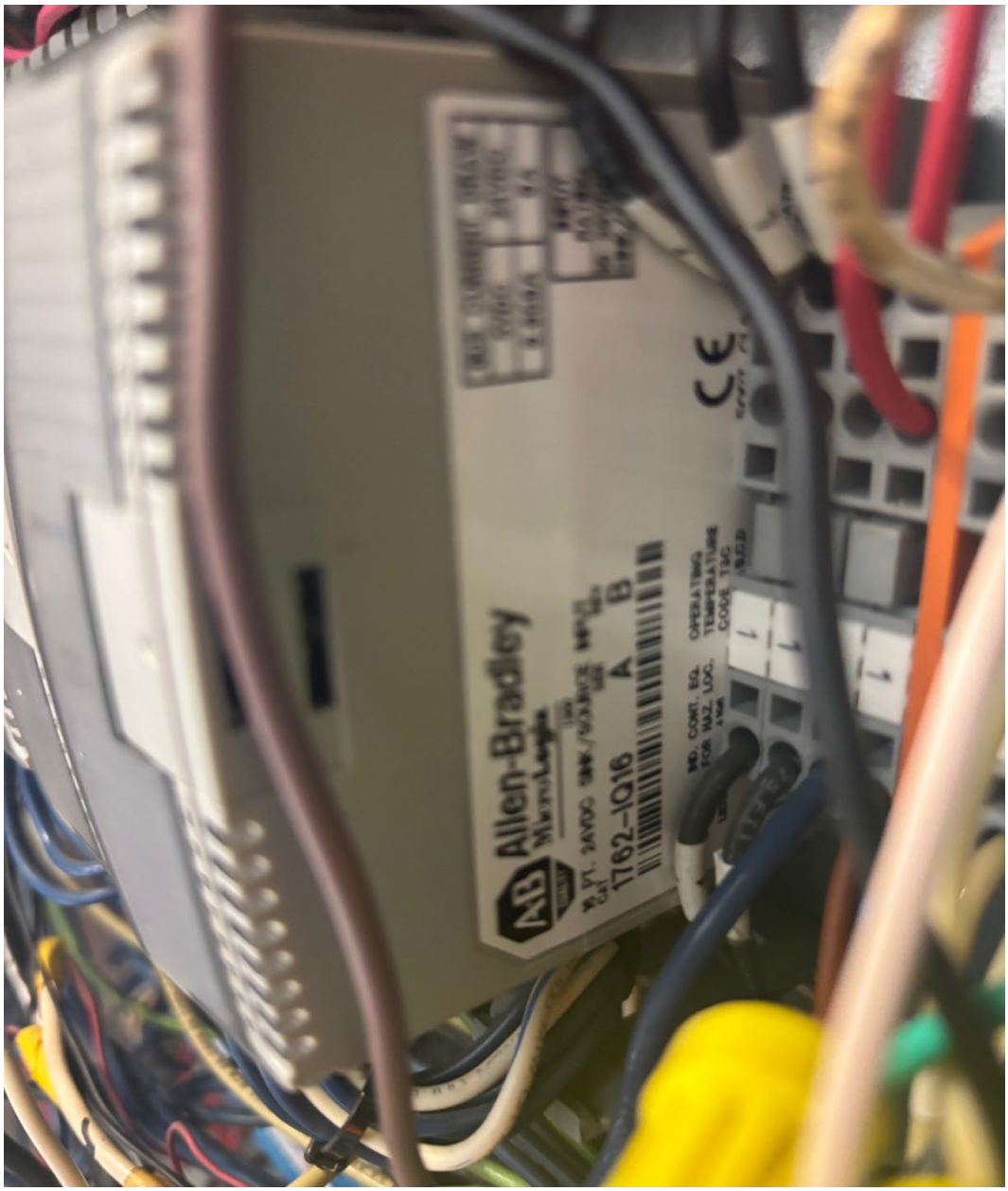

Figure 6.0 Main PLC Information

Figure 7.0 Main PLC Built in screen not working with fault upon starting.

Figure 8.0 Main PLC I/O Cards not powered up.

Figure 9.0 Existing BAS Communication Module

END OF SOW