DRAWING SIZE F

REVISIONS			
REVISION	DESCRIPTION	DATE(YEAR-MO-DA)	APPROVED
-		YEAR-MM-DD	JTD

NOTES:

1. APPLICATION STANDARDS/SPECIFICATIONS:
   A. DOD-STD-00100D (AR)
   B. MIL-A-2550
   C. MIL-C-70759
   D. ANSI Y14.5M-1982
   E. ASME/ANSI B1.8
2. MATERIAL: POLYPROPYLENE, GLASS FILLED 13061291.
3. (3) FEATURE MUST INDEX WITH THREAD LOCATION AND SIMILAR FEATURES ON BODY, CONTAINER, 13061302.
4. (4) THIS AREA OF I.D. MUST BE SMOOTH.
5. PROCESS: INJECTION MOLDING.
6. INJECTION SPRUE TO BE ON CENTER LINE OF ROTATION.
7. REMOVE INJECTION SPRUE FLUSH TO SURFACES WITH SPRUE CUTTER. DO NOT PULL OR TWIST INJECTION SPRUE.
8. DIAMETERS MUST MATCH PART NO. 13061302 (BODY, CONTAINER) SO THAT COVER CAN ASSEMBLE ON BODY.
9. BODY MUST BE MANUFACTURED BY SAME SUPPLIER AS PART NO. 13061301 (COVER, CONTAINER).
10. NOTATIONS IN PARENTHESES FOLLOWING DIMENSIONS REFLECT CRITICAL PART DIMENSIONS (SEE CLASSIFICATION OF DEFECTS SHEETS, SPEC. MIL-C-70759).
11. DIAMETER DIMENSIONS SHALL BE AVERAGED.
12. LETTERS TO BE .50 HIGH X 0.05 MIN. RAISED GOTHIC TYPE OR EQUIVALENT.
13. (13) BREAK ALL INSIDE EDGES OF SIX LOCKING NUBS.

Refer to Sketch C-2 for the dimensions of the yellow highlighted areas

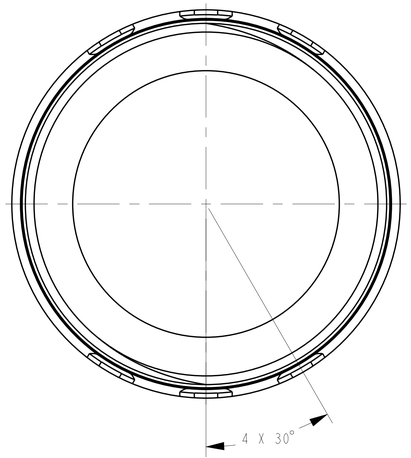

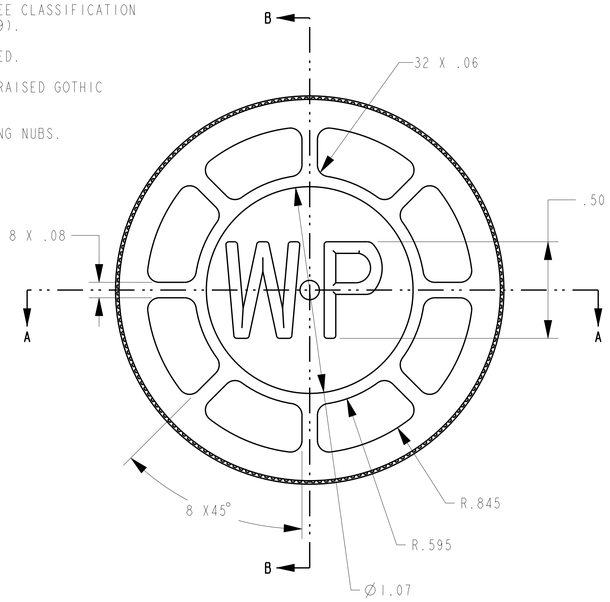

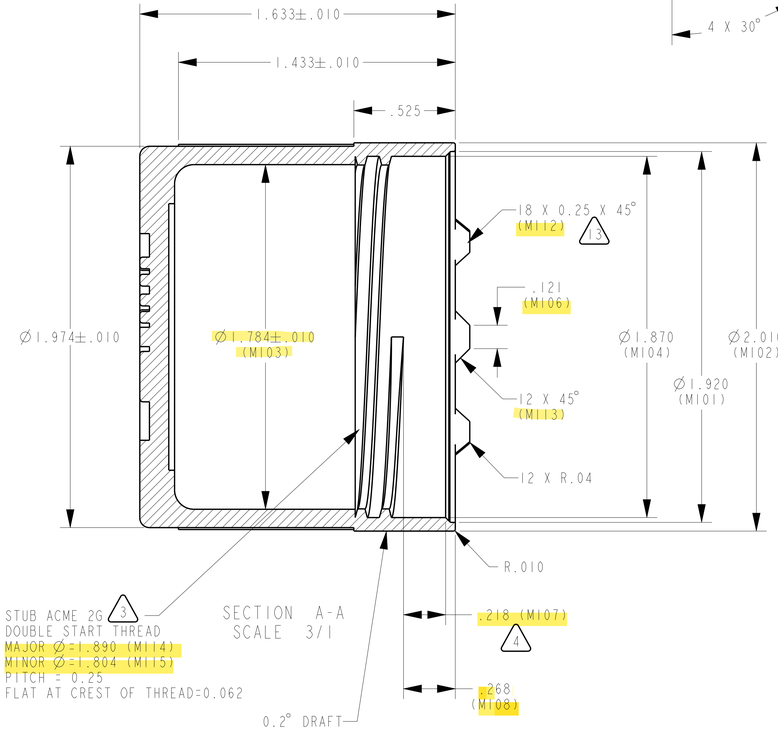

SECTION A-A
SCALE 3/1

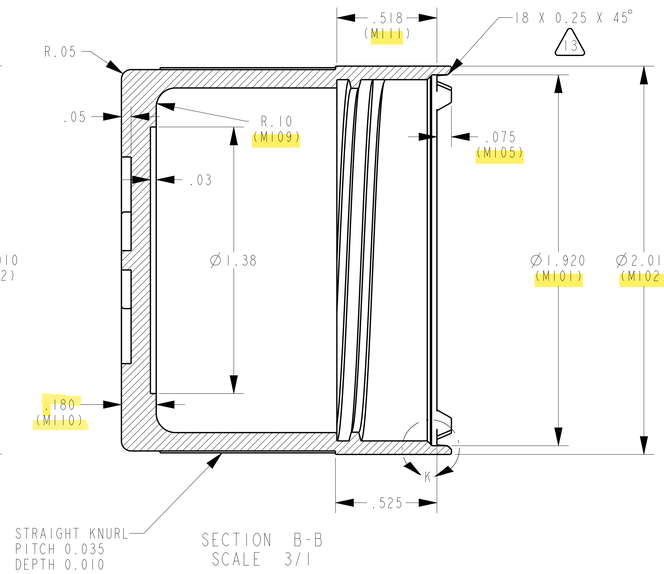

SECTION B-B
SCALE 3/1

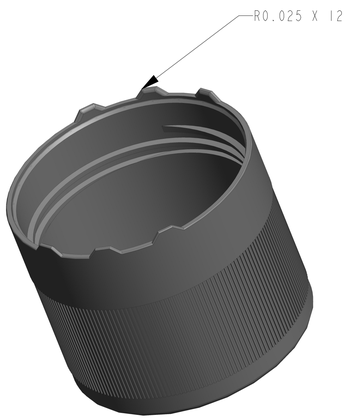

SCALE 2/1

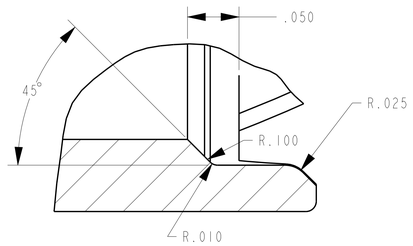

DETAIL K
SCALE 16/1

TABLE		
COVER	COMPONENT	LETTERS TO BE EMBOSSED
13061301-1	M125A1	GS
13061301-2	M126A1	RP
13061301-3	M127A1	WP
13061301-4	M128A2	SG
13061301-5	M129A2	SR
13061301-6	M158	RS
13061301-7	M159	WS
13061301-8	M195	GP

REFER TO SKETCH C-2

THIS DRAWING WAS GENERATED FROM A SOLID MODEL AND IS CAD MAINTAINED. CHANGES SHALL BE INCORPORATED BY THE DESIGN ACTIVITY.

PART NO. SEE TABLE

PMIC			DO NOT SCALE DRAWING	CONTRACT NUMBER	DESIGN ACTIVITY US ARMY ARMAMENT RESEARCH, DEVELOPMENT AND ENGINEERING CENTER PICATINNY ARSENAL, NEW JERSEY 07806-5000
			UNLESS OTHERWISE SPECIFIED DIMENSIONS ARE IN INCHES	CONTRACTOR	
MECHANICAL PROPERTIES			* TOLERANCES ON ANGLES ± ° 2 PLACE DECIMALS ±0.01 3 PLACE DECIMALS ±0.005 * ANGLE 0 PL ±0.5°, 1 PL ±0.1°	DRAWN BY / DATE (YEAR-MO-DA) YEAR-MM-DD	COVER, CONTAINER
YP			THIRD ANGLE PROJECTION	CHECKER (REQUIRED) / ENGINEER (REQUIRED)	
TS				ENGINEER / QUALITY ENGINEER	
EL2				DRAWING APPROVAL (REQUIRED) YEAR-MM-DD	SIZE F / CAGE CODE 19200 / DWG NO. SKETCH C-1
RA					
BH	13061300	PA142A1			
RH	NEXT ASSY	USED ON	MATL ENGR / MODELED BY	DESIGN APPROVAL (REQUIRED) YEAR-MM-DD	SCALE 3/1 / UNIT WT. 0.000 / SHEET 1 OF 1
	APPLICATION				

DISTRIBUTION STATEMENT A.
APPROVED FOR PUBLIC RELEASE;
DISTRIBUTION IS UNLIMITED.

FORMAT: F_TACOM_ENG.1.0

[redacted]

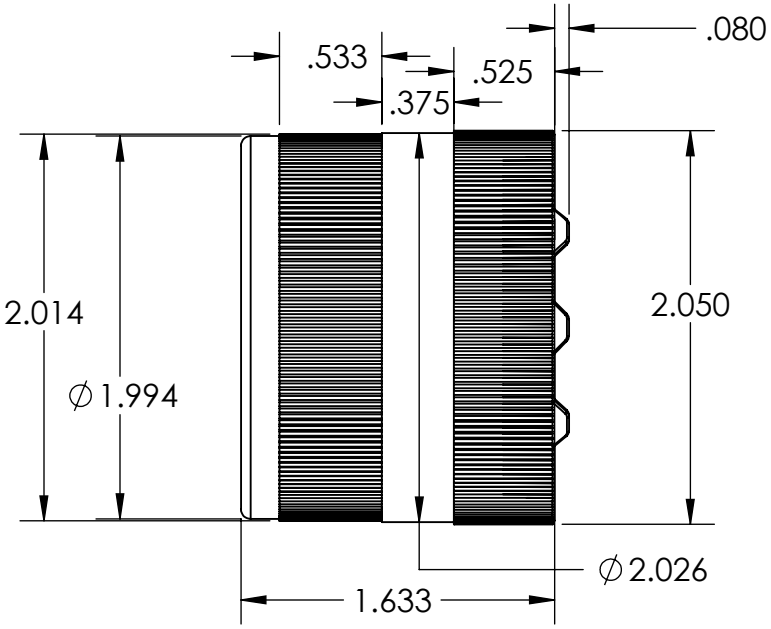

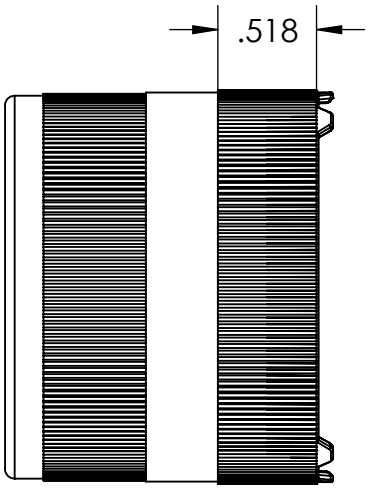

SECTION C-C
SCALE 1 : 1

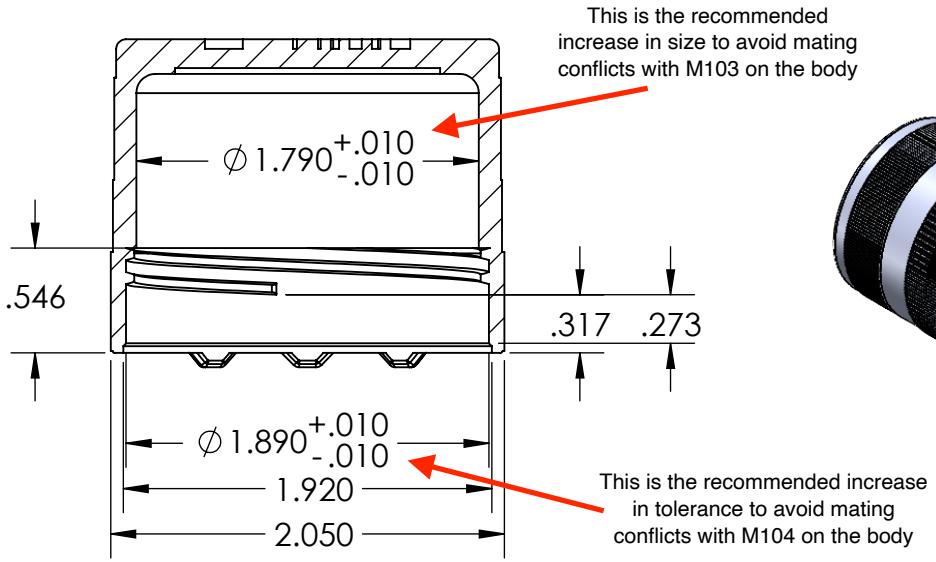

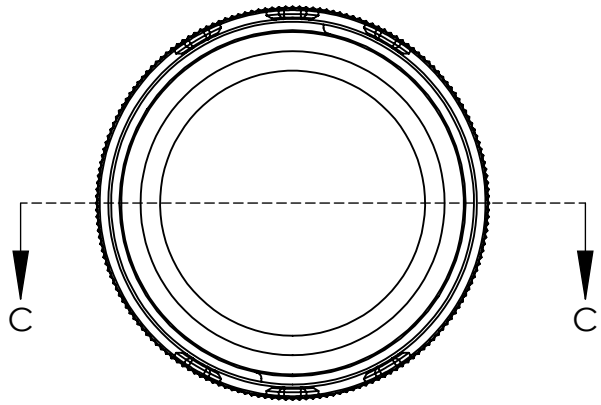

SKETCH C-2

Cover With Extended Knurls

Neither change will affect any covers already produced and will not require any additional changes to tooling, processing, or manufacturing. This change is to reflect the possibility of mating conflicts in the future.

Do Not Scale	Job No.	SHEET 1 OF 1

DRAWING SIZE F

REVISIONS			
REVISION	DESCRIPTION	DATE(YEAR-MO-DA)	APPROVED
-		YEAR-MM-DD	

NOTES:

1. APPLICATION STANDARDS/SPECIFICATIONS:
   A. DOD-STD-00100D(AR)
   B. MIL-A-2550
   C. MIL-C-70759
   D. ANSI Y14.5M-1982
   E. ASME/ANSI B1.8
2. MATERIAL: POLYPROPYLENE, GLASS FILLED 13061291.
3. FEATURE MUST INDEX WITH THREAD LOCATION AND SIMILAR FEATURES ON COVER, CONTAINER WHEN ALL 6 LOCKING NUMBS ARE ENGAGED.
4. THIS AREA OF O.D. MUST BE SMOOTH.
5. PROCESS: INJECTION MOLDING.
6. INJECTION SPRUE TO BE ON CENTER LINE OF ROTATION.
7. REMOVE INJECTION SPRUE FLUSH TO SURFACES WITH SPRUE CUTTER. DO NOT PULL OR TWIST INJECTION SPRUE.
8. BODY DIAMETERS MUST MATCH PART NO. 13061301 (COVER, CONTAINER) SO THAT COVER CAN ASSEMBLE ON BODY.
9. BODY MUST BE MANUFACTURED BY SAME SUPPLIER AS PART NO. 13061301 (COVER, CONTAINER).
10. EDGE NEAREST TO CENTER LINE MUST BE PERPENDICULAR TO THE PARTING LINE.
11. NOTATIONS IN PARENTHESES FOLLOWING DIMENSIONS REFLECT CRITICAL PART DIMENSIONS (SEE CLASSIFICATION OF DEFECTS SHEETS, SPEC. MIL-C-70759).
12. DIAMETER DIMENSIONS SHALL BE AVERAGED.

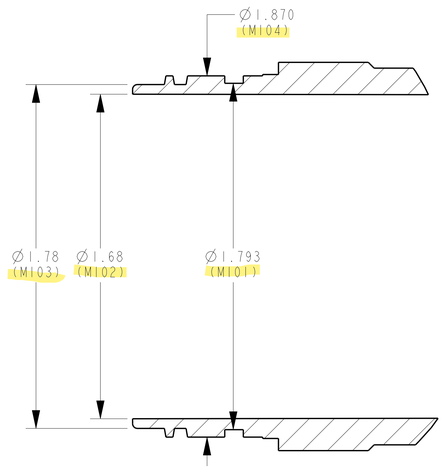

DETAIL G
SCALE 3/1

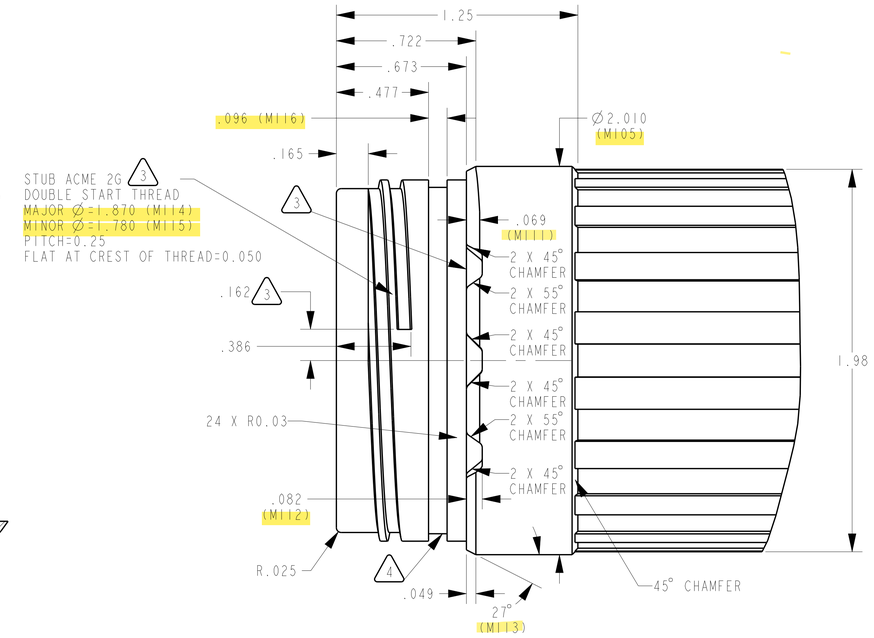

DETAIL A
SCALE 3/1

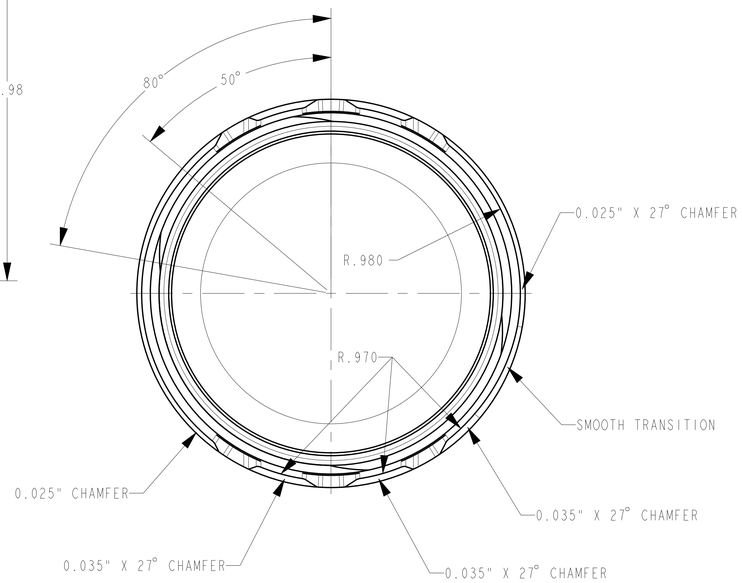

SCALE 3/1

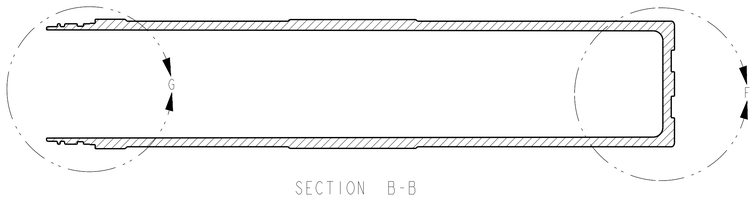

SECTION B-B
SCALE 1/1

Refer to Sketch B-2 for dimensions in the yellow highlighted areas

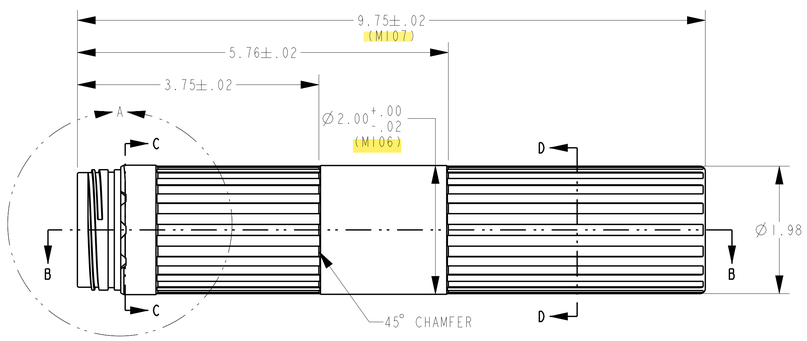

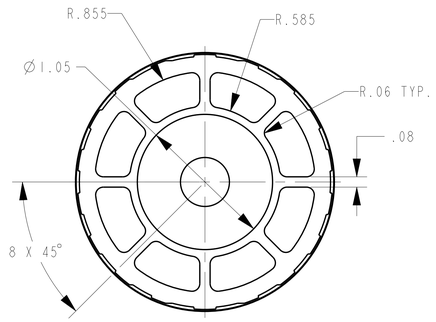

SCALE 2/1

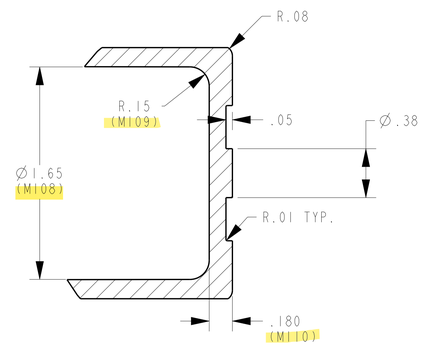

DETAIL F
SCALE 2/1

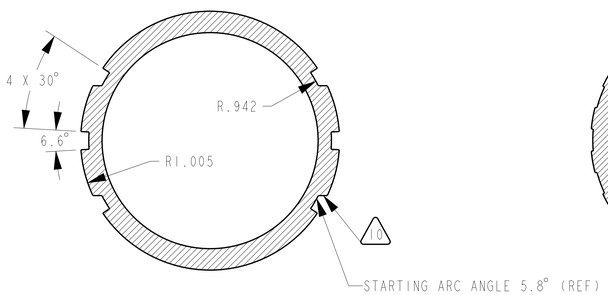

SECTION C-C
SCALE 2/1

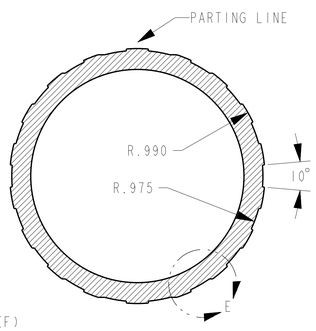

SECTION D-D
SCALE 2/1

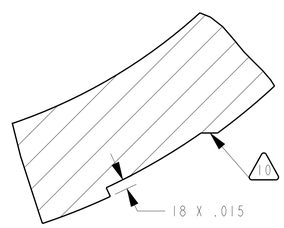

DETAIL E
SCALE 10/1

REFER TO SKETCH B-2

THIS DRAWING WAS GENERATED FROM A SOLID MODEL AND IS CAD MAINTAINED. CHANGES SHALL BE INCORPORATED BY THE DESIGN ACTIVITY.

PART NO. 13061302

PMIC			DO NOT SCALE DRAWING	CONTRACT NUMBER	DESIGN ACTIVITY US ARMY ARMAMENT RESEARCH, DEVELOPMENT AND ENGINEERING CENTER PICATINNY ARSENAL, NEW JERSEY 07806-5000
			UNLESS OTHERWISE SPECIFIED DIMENSIONS ARE IN INCHES	CONTRACTOR	
MECHANICAL PROPERTIES			* TOLERANCES ON ANGLES ± ° 2 PLACE DECIMALS ±0.01 3 PLACE DECIMALS ±0.005 * ANGLE 0 PL ±0.5°, 1 PL ±0.1°	DRAWN BY / DATE (YEAR-MO-DA) YEAR-MM-DD	BODY, CONTAINER
YP			THIRD ANGLE PROJECTION	CHECKER (REQUIRED) / ENGINEER (REQUIRED)	
TS				ENGINEER / QUALITY ENGINEER	
EL2					
RA				DRAWING APPROVAL (REQUIRED) YEAR-MM-DD	SIZE F / CAGE CODE 19200 / DWG NO. SKETCH B-1
BH	13061300	PA142A1			
RH	NEXT ASSY	USED ON	MATL ENGR / MODELED BY	DESIGN APPROVAL (REQUIRED) YEAR-MM-DD	SCALE 1/1 / UNIT WT. 0.000 / SHEET 1 OF 1
	APPLICATION				

DISTRIBUTION STATEMENT A.
APPROVED FOR PUBLIC RELEASE;
DISTRIBUTION IS UNLIMITED.

FORMAT: F_TACOM_ENG_1.0

[redacted]

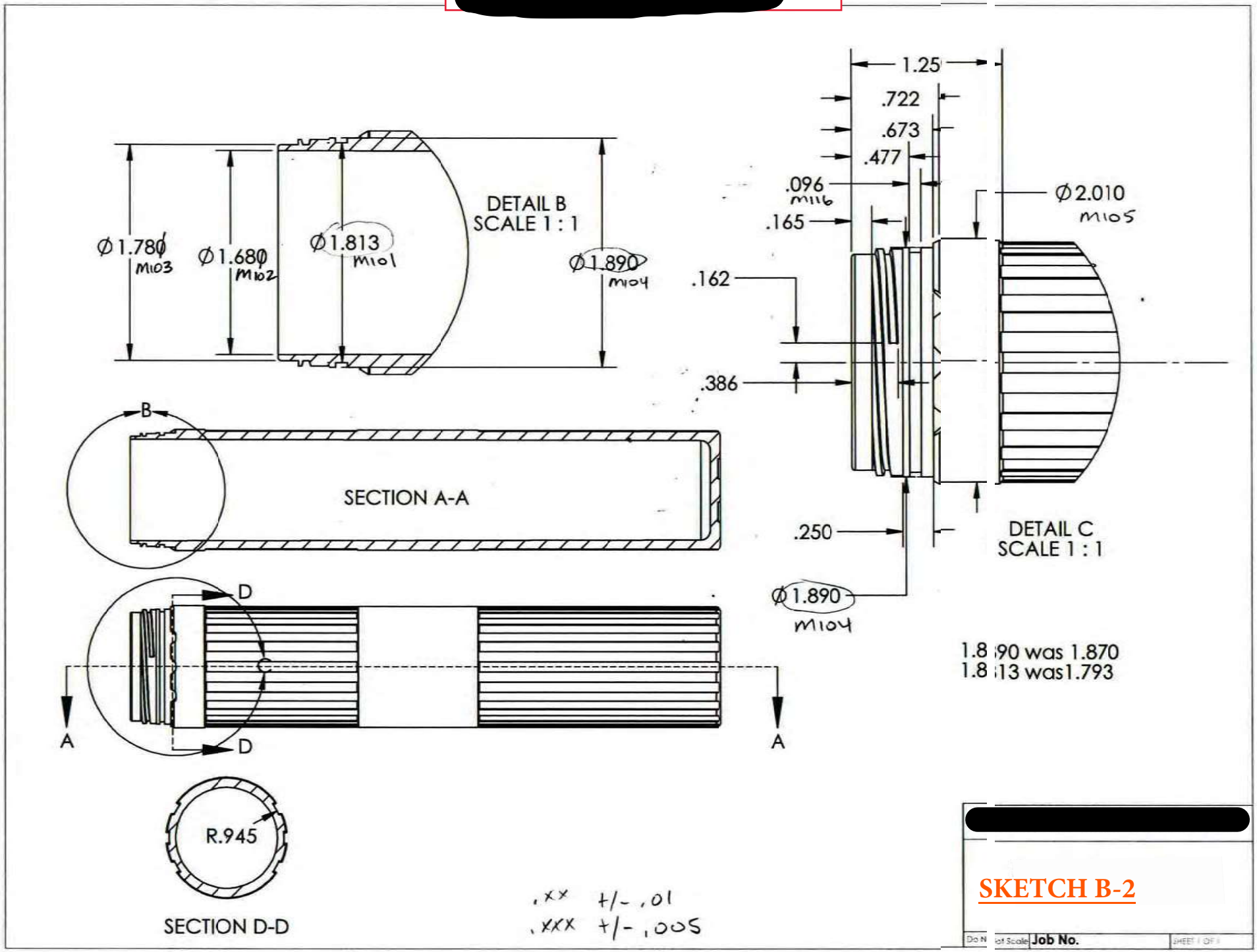
DETAIL B
SCALE 1 : 1
Ø1.780
M103
Ø1.680
M102
Ø1.813
M101
Ø1.890
M104
SECTION A-A
B
D
D
A
A
R.945
SECTION D-D
1.25
.722
.673
.477
.096
M116
.165
.162
.386
.250
Ø2.010
M105
Ø1.890
M104
DETAIL C
SCALE 1 : 1
1.890 was 1.870
1.813 was1.793
.xx +/- .01
.xxx +/- .005
[redacted]
SKETCH B-2
Do Not Scale
Job No.
SHEET 1 OF 1

DRAWING SIZE C

REVISIONS			
REVISION	DESCRIPTION	DATE(YEAR-MO-DA)	APPROVED
-	PRODUCT BASELINE ERR R16Y2001	2016-08-31	JTD

NOTES:

1. APPLICABLE STANDARDS/SPECIFICATIONS:
   A-DOD-STD-00100D(AR)
   B-MIL-A-2550

2. MATERIAL:
   POLYPROPYLENE. CHEMICALLY COUPLED. HEAT STABLIZED. U.V.
   15±1% GLASS FORTIFIED. MELT FLOW RATE: 1-3 GRAMS/10 MINUTES.
   COLOR: LAB NUMBER UNDER D75 10 DEG ILLUMINANT:
   L-40.56, A-5.26, B-19.28
   IZOD IMPACT STRENGTH PER ASTM D256: 2.3 FT-LB/IN MINIMUM
   TENSILE STRENGTH PER ASTM D638: 5,000 PSI MINIMUM
   FLEXURAL STRENGTH PER ASTM D790: 8,000 PSI MIMINUM
   FLEXURAL MODULUS PER ASTM D790: 300,000 PSI MIMINUM

3. IDENTIFICATION OF THE "SUGGESTED SOURCE(S) OF SUPPLY" HEREON IS NOT TO BE CONSTRUED AS A GUARANTEE OF PRESENT OR CONTINUED AVAILABILITY AS A SOURCE OF SUPPLY FOR THE ITEM.

1. In Note 2, line 2: Remove "CHEMICALLY COUPLED" and "HEAT". It should now state "POLYPROPYLENE UV STABILIZED".
2. In Note 2, lines 4 & 5: The color shall be changed to "COLOR: AMS-STD-595 (REV A), COLOR NUMBER 30118 (BROWN). Remove all the other color related verbiage/ text.
3. In Suggested Sources of Supply Table: In 1st vendor row under "VENDOR PART NO." change from "1240653" to "RTP 199 X 150853, S902952 (COYOTE BROWN)"
4. In Suggested Sources of Supply Table: In 1st vendor row under "ITEM IDENTIFICATION", delete "RPP15ER1132BN", leave the block blank.

SUGGESTED SOURCE(S) OF SUPPLY				
PART NO.	VENDOR		VENDOR PART NO.	ITEM IDENTIFICATION
	ADDRESS	CAGE CODE		
13061291	FERRO CORPORATION 807 CIRCLE TRACE ROAD MONROE, NC 28110		1240653	RPP15ER1132BN
	TEKNOR APEX COMPANY 505 CENTRAL AVE PAWTUCKET, RI 02861		8677-1	

THIS DRAWING WAS GENERATED FROM A SOLID MODEL AND IS CAD MAINTAINED. CHANGES SHALL BE INCORPORATED BY THE DESIGN ACTIVITY.

PART NO. SEE TABLE

SPECIFICATION CONTROL DRAWING

PMIC			
MECHANICAL PROPERTIES			
YP			
TS			
EL2		13061301	PA142 A1 CONTAINER
RA		13061302	
BH		NEXT ASSY	USED ON
RH		APPLICATION	

DO NOT SCALE DRAWING

UNLESS OTHERWISE SPECIFIED DIMENSIONS ARE IN INCHES

TOLERANCE ON ANGLES ± °
2 PLACE DECIMALS ±
3 PLACE DECIMALS ±

THIRD ANGLE PROJECTION

MATL ENGR | MODELED BY

CONTRACT NUMBER
CONTRACTOR
DRAWN BY | DATE(YEAR-MO-DA)
CHECKER | ENGINEER
ENGINEER | QUALITY ENGINEER
DRAWING APPROVAL
DESIGN APPROVAL

DESIGN ACTIVITY
US ARMY
ARMAMENT RESEARCH, DEVELOPMENT AND ENGINEERING CENTER
PICATINNY ARSENAL, NEW JERSEY 07806-5000

SKETCH M-1

SIZE	CAGE CODE	DWG NO.
C	19200	SKETCH M-1

SCALE 1.000 | UNIT WT. 0.000 | SHEET 1 OF 1

DISTRIBUTION STATEMENT A.
APPROVED FOR PUBLIC RELEASE;
DISTRIBUTION IS UNLIMITED.

FORMAT: C_TACOM_ENG_1_0