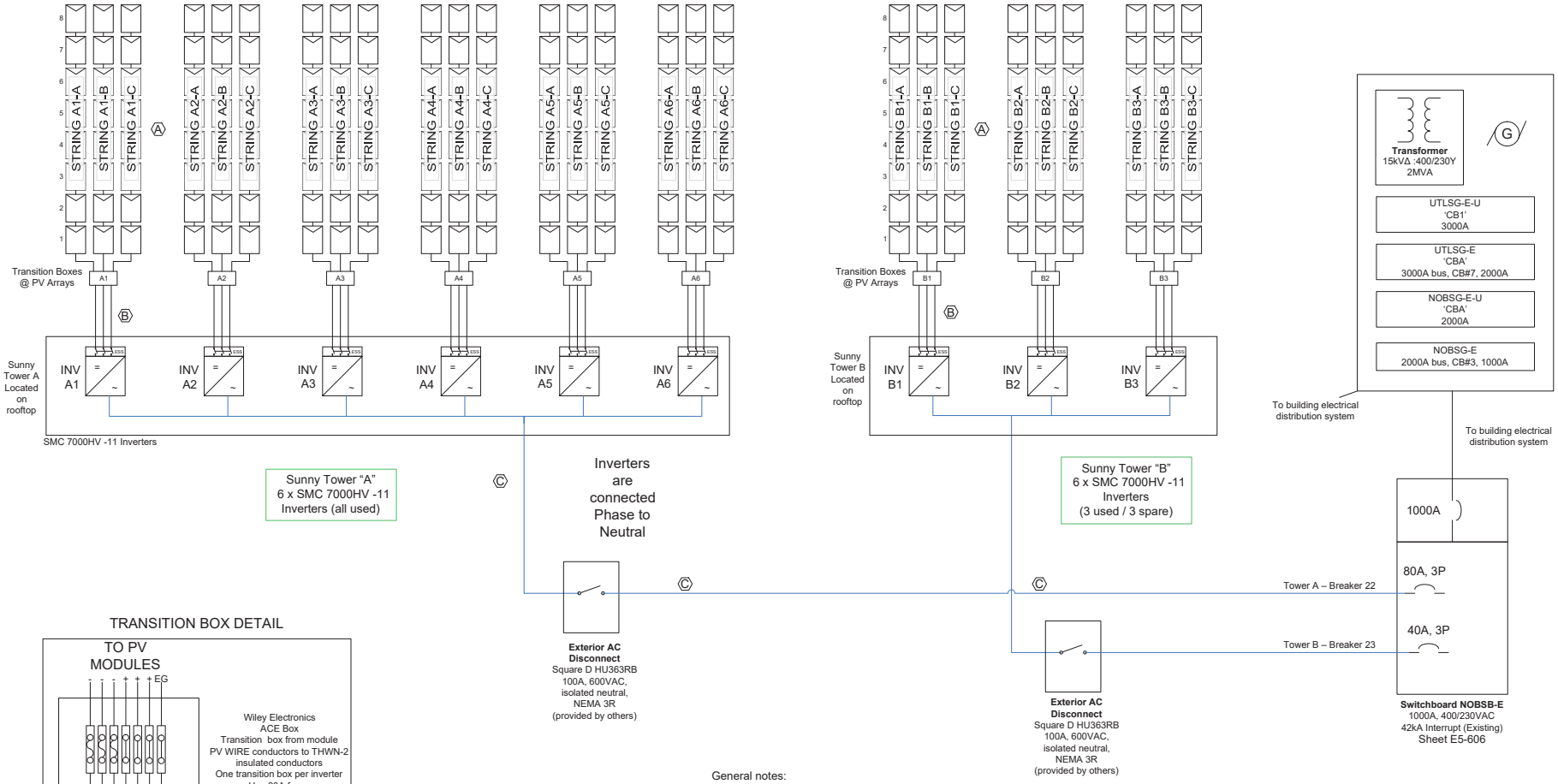

TRANSITION BOX DETAIL

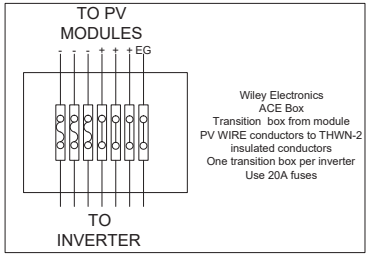

Wiley Electronics
ACE Box
Transition box from module
PV WIRE conductors to THWN-2
insulated conductors
One transition box per inverter
Use 20A fuses

Conduit & Conductor requirements		
Label	Description	Conduit & Wire
Ⓐ	Array	6-PV wire 4 mm2, #8G bare
Ⓑ	DC	¾" RGS, 6#10 THWN-2, #8 EGC
Ⓒ	AC	2" RGS, 4#1/0 THWN-2, 1#6 G

General notes:
-See sheet BE1.07 for PV array layouts & location
-See sheet BE1.08 for Sunny towers, inverters, disconnects & DAS equipment layout
-See sheet BE6.01 for Data Acquisition Plan

Sunny tower A configuration:
144 Sunpower SPR 320E-WHT-D PV Modules
One array per inverter; Six arrays total
Each array comprised of three strings of eight modules or 24 modules per inverter
Voc =518V, Isc = 6.24A
Location: rooftop Positive Ground

Sunny tower B configuration:
72 Sunpower SPR 320E-WHT-D PV Modules
One array per inverter; Three arrays total
Each array comprised of three strings of eight modules or 24 modules per inverter
Voc = 518V, Isc = 6.24A
Location: rooftop Positive Ground

RESC
RENEWABLE EQUIPMENT SUPPLY, LLC
P.O. Box 108
189 River Rd.
Rhinebeck, NY 12572
Office: 518.674.3684
Mobile: 518.369.9960
Fax: 518.514.1212

PROJECT: PROJECT 92937
DWG BY: TSI
CHK BY: MPS
DATE: 07/18/11
DESCRIPTION: NOB PV SYSTEM (69.12 kW)
SCALE: AS NOTED
SHEET No. BE1.06

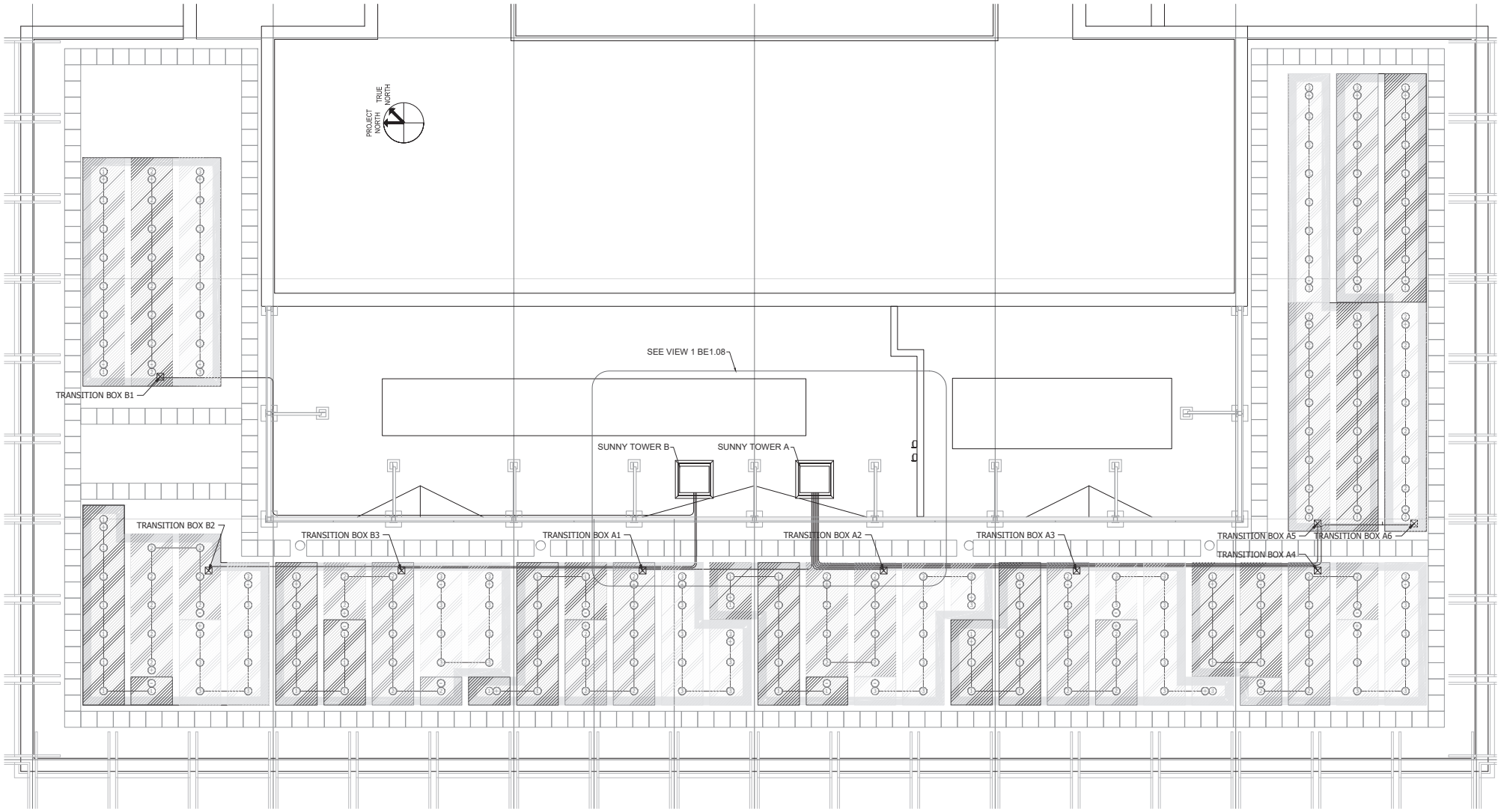

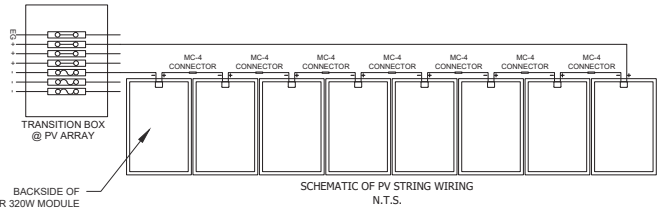

SCHEMATIC OF PV STRING WIRING
N.T.S.

1 NOB
N.T.S.

RESC
RENEWABLE EQUIPMENT SUPPLY, LLC
P.O. Box 108
189 River Rd.
Rhinebeck, NY 12572
Office: 518.674.3684
Mobile: 518.369.9960
Fax: 518.514.1212

PROJECT: PROJECT 92937
DWG BY: TSI
CHK BY: MPS
DATE: 07/18/11
SCALE: AS NOTED
DESCRIPTION: NOB PV LAYOUT
SHEET No. BE1.07

General notes:
-See sheet BE2.07 for PV array layouts & location
-See sheet BE2.08 for Sunny towers, inverters, disconnects & DAS equipment layout
-See sheet BE6.01 for Data Acquisition Plan

Sunny tower A configuration:
48 Sunpower SPR 320E-WHT-D PV Modules
One array per inverter; Three arrays total
Each array comprised of 2 strings of eight modules or 16 modules per inverter
Voc =518 , Isc = 6.24A
Location: rooftop Positive Ground

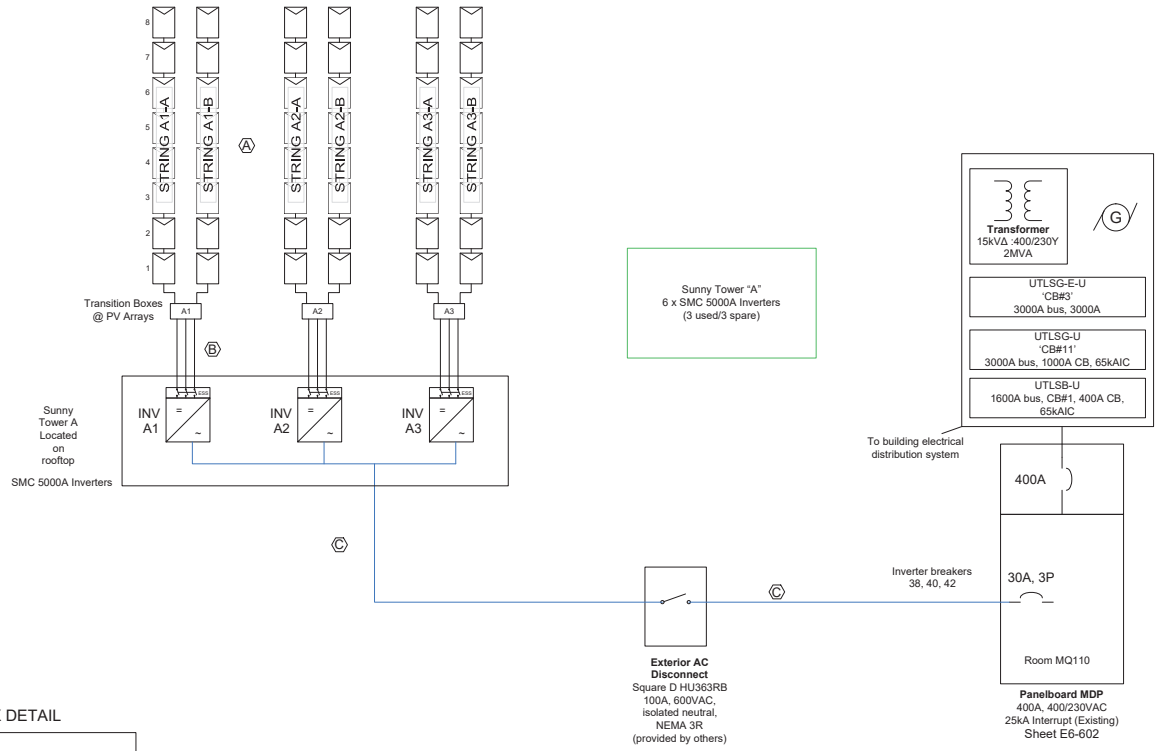

TRANSITION BOX DETAIL

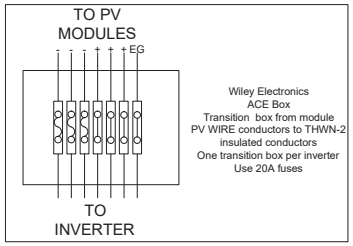

Conduit & Conductor requirements		
Label	Description	Conduit & Wire
A	Array	6-PV wire 4 mm2, #8G bare
B	DC	¾" RGS, 6#10 THWN-2, #8 EGC
C	AC	1 1/4" RGS, 4#4 THWN-2, 1#6 G

RESC
RENEWABLE EQUIPMENT SUPPLY, LLC
P.O. Box 108
189 River Rd.
Rhinebeck, NY 12572
Office: 518.674.3684
Mobile: 518.369.9960
Fax: 518.514.1212

PROJECT: PROJECT 92937

DWG BY: TSI | CHK BY: MPS

DATE: 07/18/11

SCALE: AS NOTED

DESCRIPTION: MSGQ
PV SYSTEM (15.36 kW)

SHEET No. BE2.06

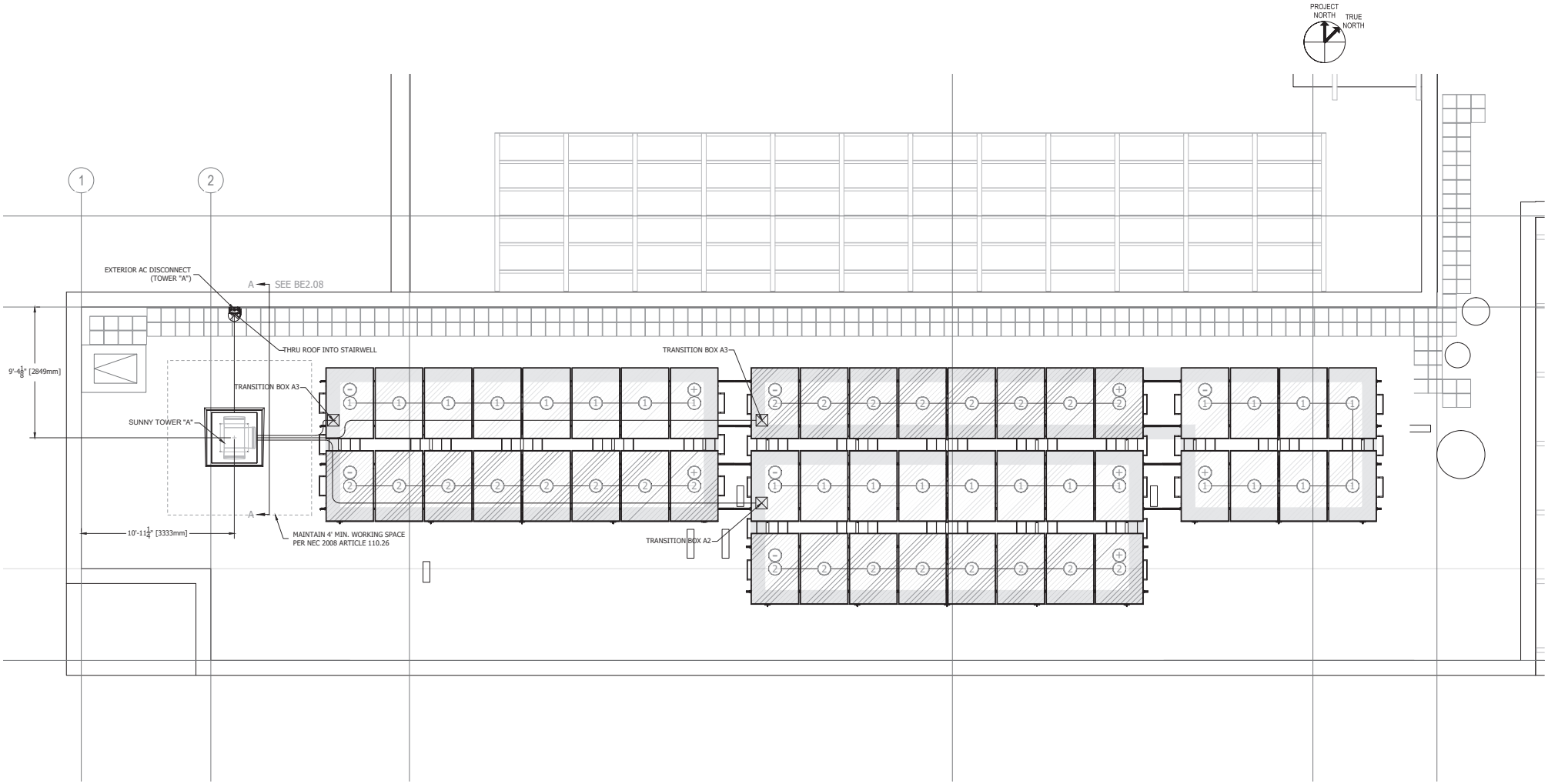

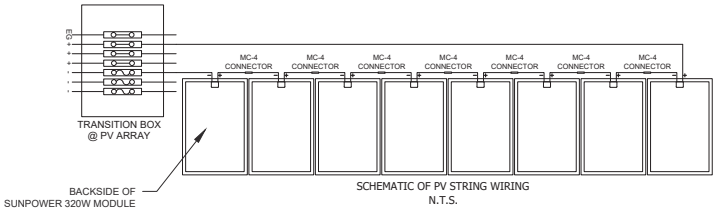

SCHEMATIC OF PV STRING WIRING
N.T.S.

1 MSGQ
Scale: N.T.S.

RESC
RENEWABLE EQUIPMENT SUPPLY, LLC

P.O. Box 108
189 River Rd.
Rhinebeck, NY 12572
Office: 518.674.3684
Mobile: 518.369.9960
Fax: 518.514.1212

PROJECT: PROJECT 92937

DWG BY: TSI | CHK BY: MPS

DATE: 07/18/11

SCALE: AS NOTED

DESCRIPTION: MSGQ PV LAYOUT

SHEET No. BE2.07

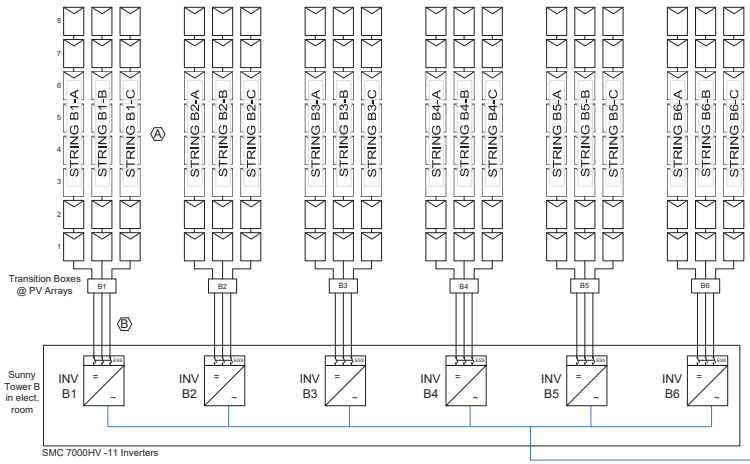

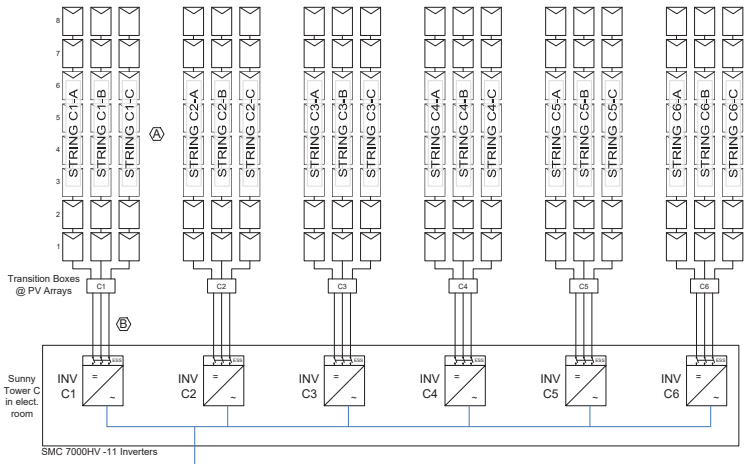

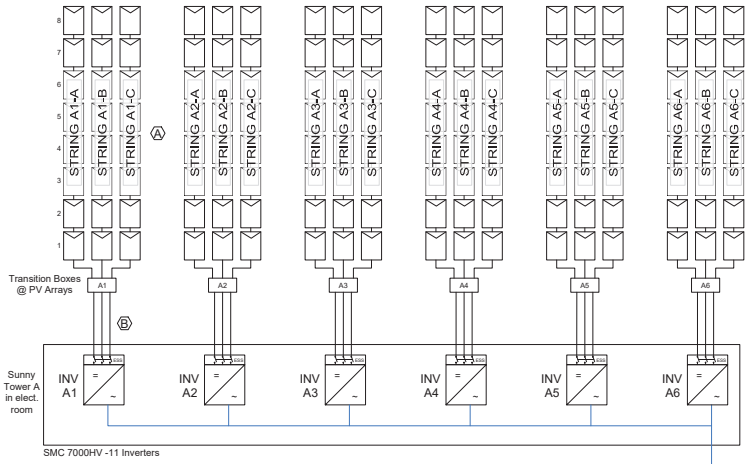

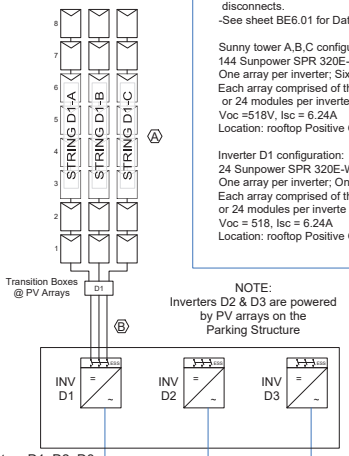

General notes:
-See sheet BE3.07 for PV array layouts & location
-See sheet BE3.08 for Sunny towers, inverters & disconnects.
-See sheet BE6.01 for Data Acquisition Plan

Sunny tower A,B,C configuration:
144 Sunpower SPR 320E-WHT-D PV Modules
One array per inverter; Six arrays total
Each array comprised of three strings of eight modules, or 24 modules per inverter
Voc =518V, Isc = 6.24A
Location: rooftop Positive Ground

Inverter D1 configuration:
24 Sunpower SPR 320E-WHT-D PV Modules
One array per inverter; One array total
Each array comprised of three strings of eight modules, or 24 modules per inverte
Voc = 518, Isc = 6.24A
Location: rooftop Positive Ground

NOTE:
Inverters D2 & D3 are powered by PV arrays on the Parking Structure

Inverters D1, D2, D3 mounted on wall in elect. room of WHE

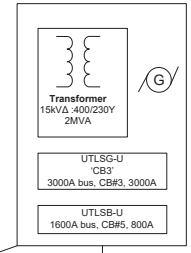

To building electrical distribution system

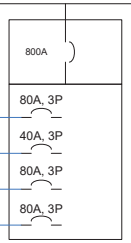

Tower C – breaker 79, 81, 83

Wall mounted inverters- breaker 74, 76, 78

Tower B – breaker 73, 75, 77

Tower A – breaker 67, 69, 71

Switchboard WHU SEC2
800A, 400/230VAC
42kA Interrupt (Existing)
Sheet E7-602

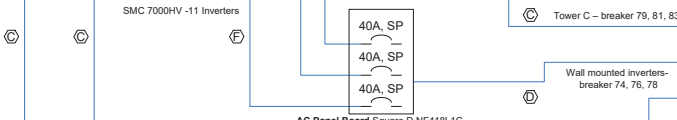

AC Panel Board Square D NF418L1C
125A,3 ph, 400/230VAC MLO, NEMA 1
(provided by others)

AC COMBINER PANEL DETAIL

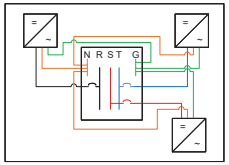

TRANSITION BOX DETAIL

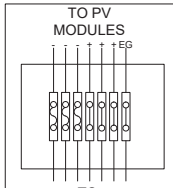

Wiley Electronics
ACE Box
Transition box from module
PV WIRE conductors to THWN-2 insulated conductors
One transition box per inverter
Use 20A fuses

Conduit & Conductor requirements		
Label	Description	Conduit & Wire
Ⓐ	Array	6-PV wire 4 mm2, #8G bare
Ⓑ	DC	¾" RGS, 6#10 THWN-2, #8 EGC
Ⓒ	AC	2" RGS, 4#1/0 THWN-2, #6 G
Ⓓ	AC	1 ¼" RGS, 4#4 THWN-2, #6 G
Ⓔ	AC	1" RGS, 6#8 THWN-2, #6 G

RESC
RENEWABLE EQUIPMENT SUPPLY, LLC
P.O. Box 108
189 River Rd.
Rhinebeck, NY 12572
Office: 518.674.3684
Mobile: 518.369.9960
Fax: 518.514.1212

PROJECT: PROJECT 92937
DWG BY: TSI
CHK BY: MPS
DATE: 07/18/11
SCALE: AS NOTED
DESCRIPTION: WHE
PV SYSTEM (145.92 kW)
SHEET No. BE3.06

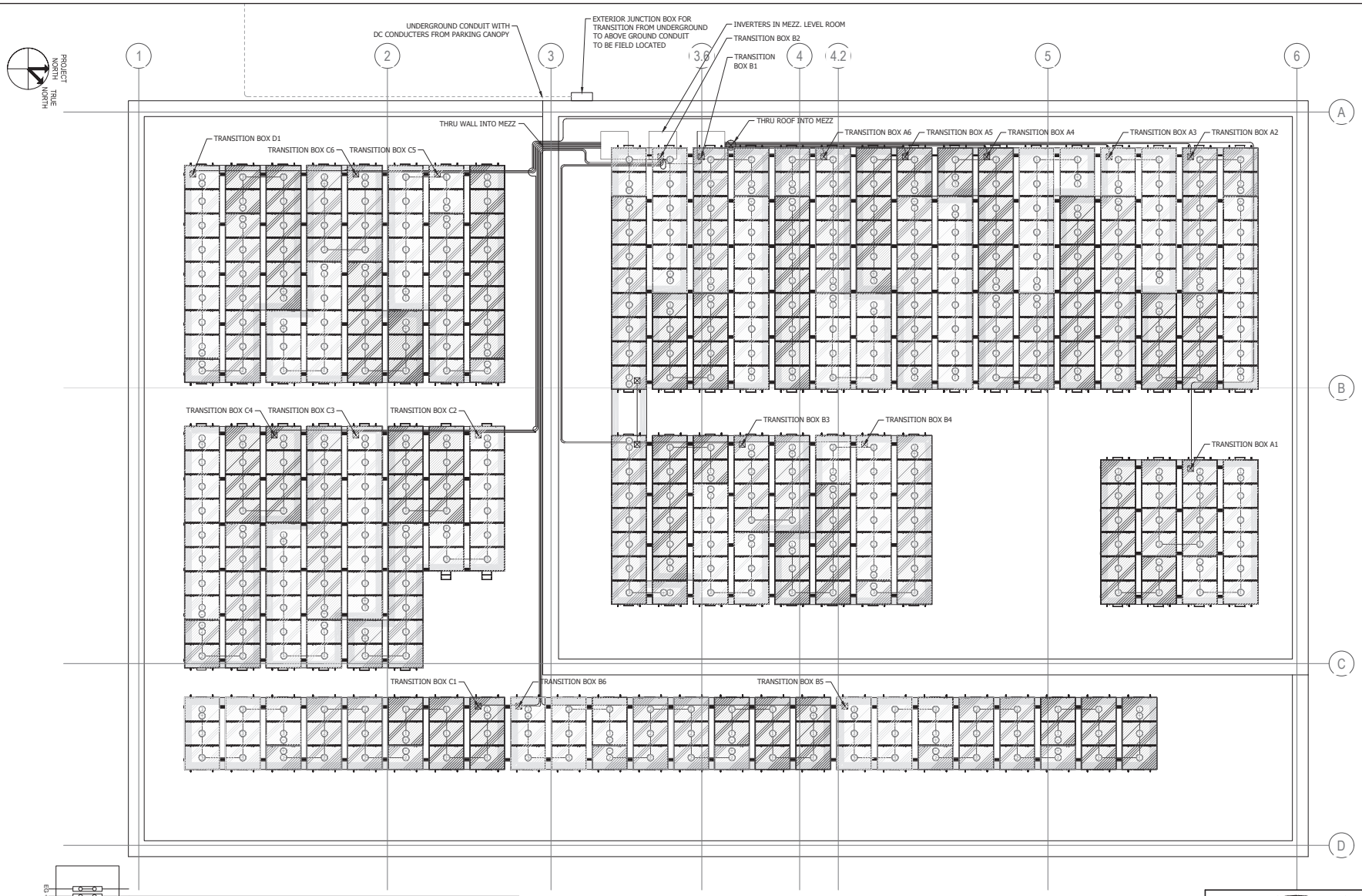

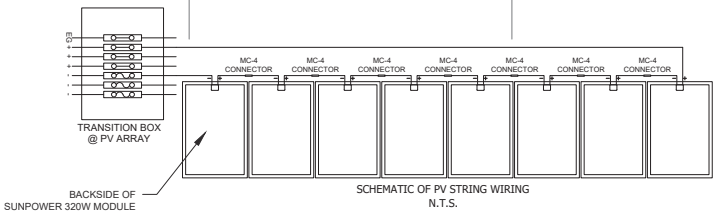

SCHEMATIC OF PV STRING WIRING
N.T.S.

1 WAREHOUSE
Scale: N.T.S.

RESC
RENEWABLE EQUIPMENT SUPPLY, LLC
P.O. Box 108
189 River Rd.
Rhinebeck, NY 12572
Office: 518.674.3684
Mobile: 518.369.9960
Fax: 518.514.1212

PROJECT: PROJECT 92937
DWG BY: TSI
CHK BY: MPS
DATE: 07/18/11
SCALE: AS NOTED
DESCRIPTION: WHE PV LAYOUT
SHEET No. BE3.07

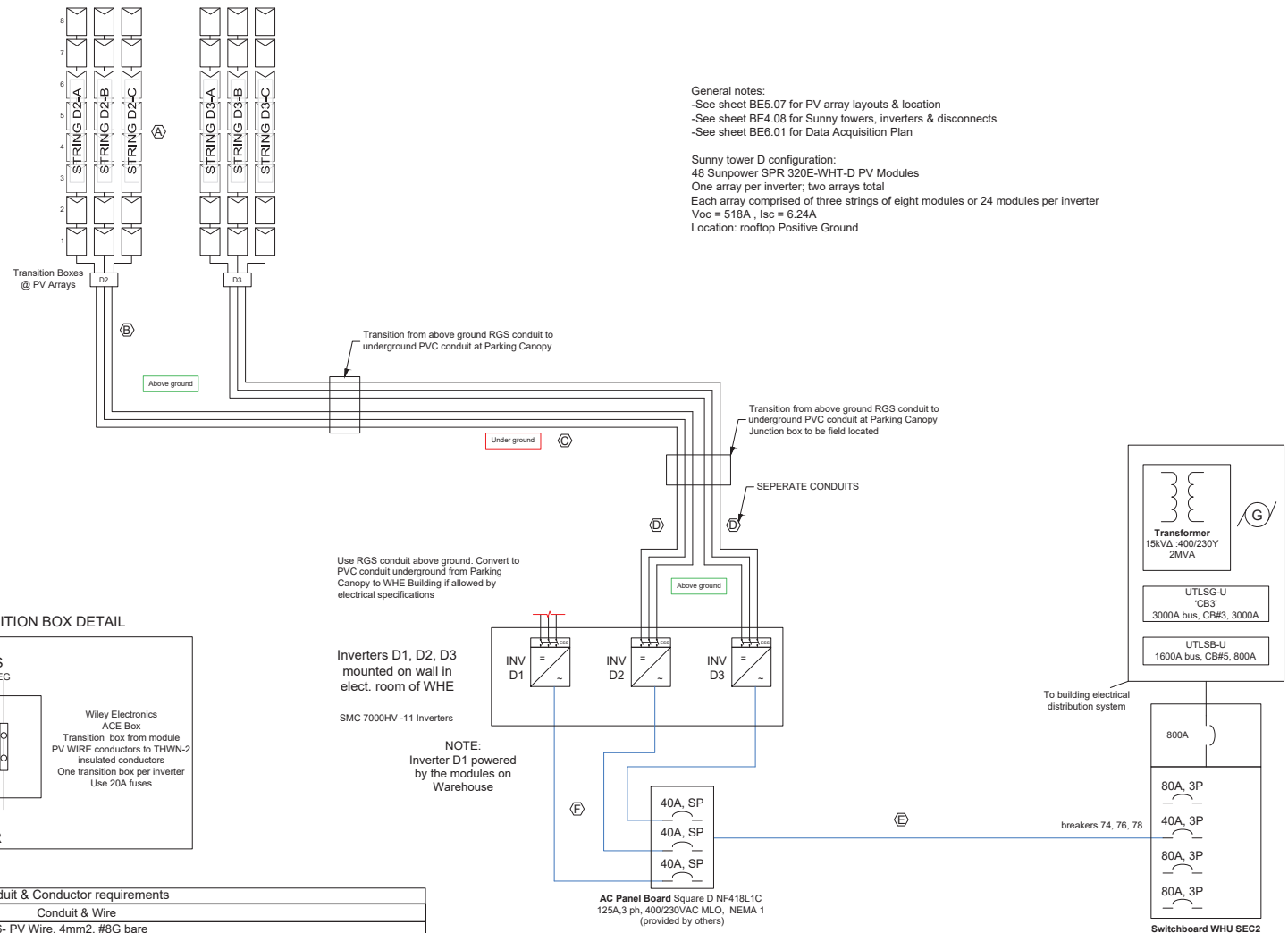

General notes:
-See sheet BE5.07 for PV array layouts & location
-See sheet BE4.08 for Sunny towers, inverters & disconnects
-See sheet BE6.01 for Data Acquisition Plan

Sunny tower D configuration:
48 Sunpower SPR 320E-WHT-D PV Modules
One array per inverter; two arrays total
Each array comprised of three strings of eight modules or 24 modules per inverter
Voc = 518A , Isc = 6.24A
Location: rooftop Positive Ground

TRANSITION BOX DETAIL

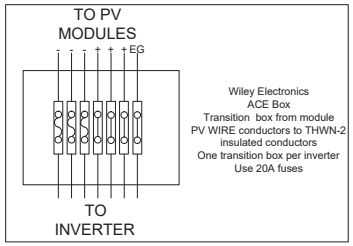

Wiley Electronics
ACE Box
Transition box from module
PV WIRE conductors to THWN-2 insulated conductors
One transition box per inverter
Use 20A fuses

Conduit & Conductor requirements		
Label	Description	Conduit & Wire
A	Array	6- PV Wire, 4mm2, #8G bare
B	DC	3/4" RGS, 6#10 THWN-2, #8 EGC (above ground)
C	DC	2" PVC, 6#8 THWN-2, #8 G (underground) -SINGLE CONDUIT
D	DC	1" RGS, 6#10 THWN-2, #8 EGC (above ground) -TWO SEPERATE CONDUITS
E	AC	1 1/2" RGS, 4#2 THWN-2, #6 G
F	AC	1" RGS, 6#8 THWN-2, #6 G

RESC
RENEWABLE EQUIPMENT SUPPLY, LLC
P.O. Box 108
189 River Rd.
Rhinebeck, NY 12572
Office: 518.674.3684
Mobile: 518.369.9960
Fax: 518.514.1212

PROJECT: PROJECT 92937
DWG BY: TSI
CHK BY: MPS
DATE: 07/18/11
SCALE: AS NOTED
DESCRIPTION: PARKING STRUCTURE PV SYSTEM (15.36kW)
SHEET No. BE5.06

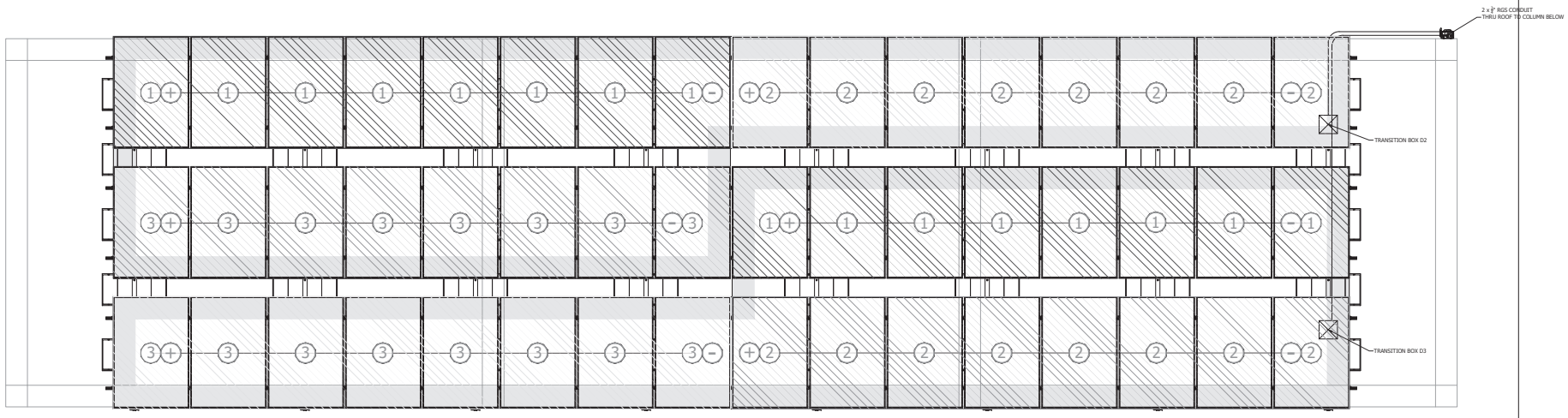

1 PARKING STRUCTURE
Scale: N.T.S.

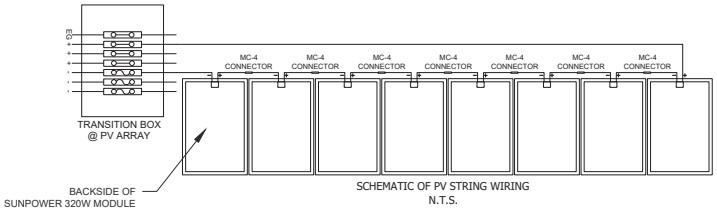

SCHEMATIC OF PV STRING WIRING
N.T.S.

RESC
RENEWABLE EQUIPMENT SUPPLY, LLC
P.O. Box 108
189 River Rd.
Rhinebeck, NY 12572
Office: 518.674.3684
Mobile: 518.369.9960
Fax: 518.514.1212

PROJECT: PROJECT 92937
DWG BY: TSI
CHK BY: MPS
DATE: 07/18/11
SCALE: AS NOTED
DESCRIPTION: PARKING STRUCTURE PV LAYOUT
SHEET No. BE5.07

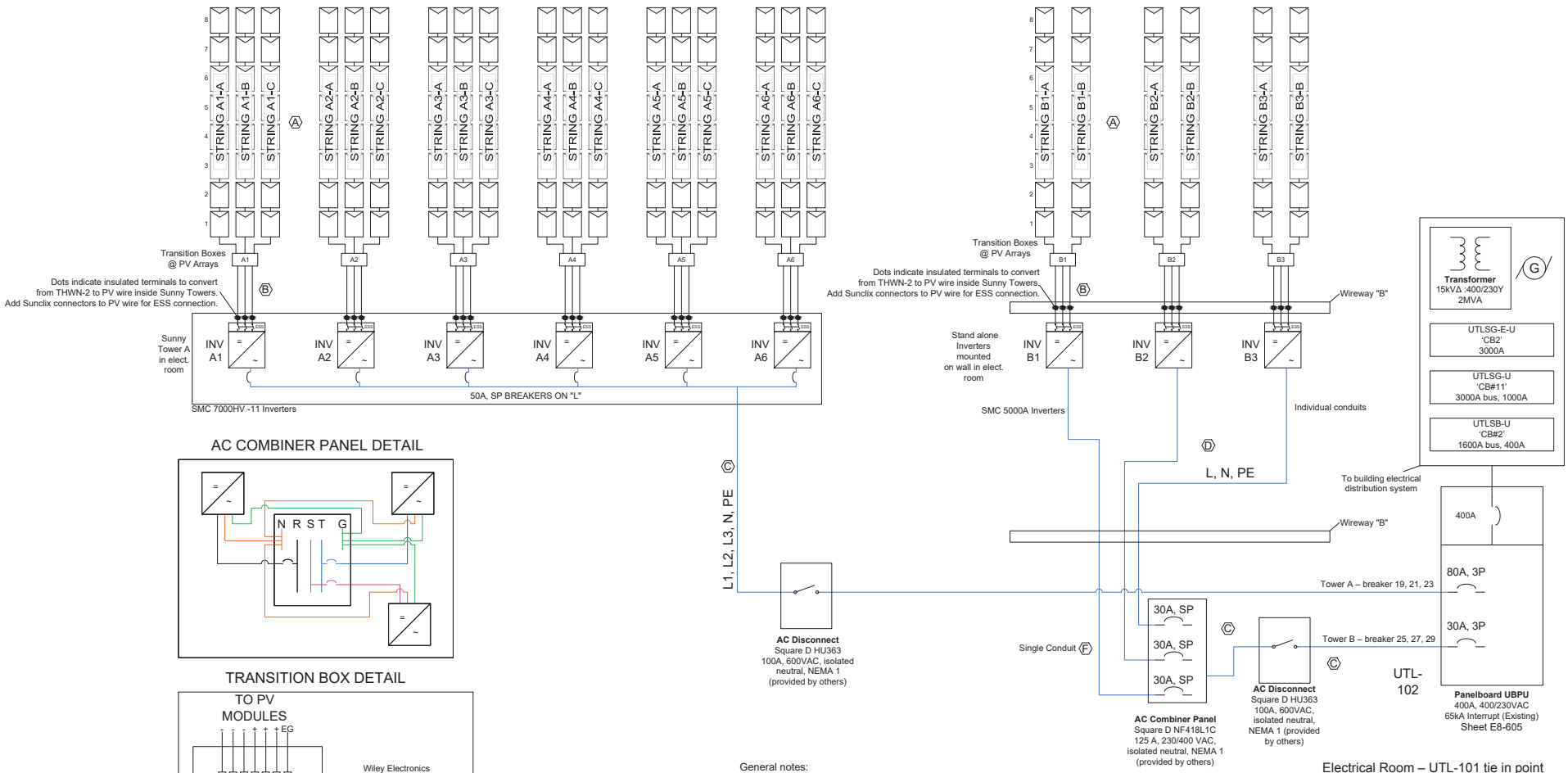

AC COMBINER PANEL DETAIL

TRANSITION BOX DETAIL

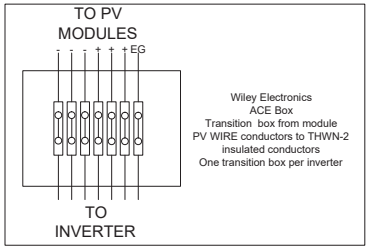

Conduit & Conductor requirements		
Label	Description	Conduit & Wire
Ⓐ	Array	6-PV wire 6 mm2
Ⓑ	DC	¾" RGS, 6#10 THWN-2, #8 EGC
Ⓒ	AC	2" RGS, 4#1/0 THWN-2, #6 G
Ⓓ	AC	¾" FMC, 2#8 THWN-2, #6 G FOR EACH INVERTER
Ⓕ	AC	1¼" RGS, 6#8 THWN-2, #6 G
Ⓖ	EGC	#6 BARE COPPER, SEE DRAWING BE4.04

General notes:
-See sheet BE4.07 for PV array layouts & location
-See sheet BE4.08 for Sunny towers, inverters & disconnects
-See sheet BE.CD06 for Data Acquisition Plan

Sunny Tower A configuration:
144 SunpowerSPR 320E-WHT-D PV Modules
One array per inverter; Six arrays total;
Each array comprised of three strings of eight modules or 24 modules per inverter
Voc =518V, Isc = 6.24A
Location: rooftop Positive Ground

Stand alone inverter (B1, B2 & B3) configuration:
48 Sunpower SPR 320E-WHT-D PV Modules
One array per inverter; Two arrays total
Each array comprised of 2 strings of eight modules or 16 modules per inverter
Voc =518 , Isc = 6.24A
Location: rooftop Positive Ground

ALL SCALES BASED ON FULL SIZED DRAWING 24"x36"
REVISED: 12/30/11 -ISSUE FOR CONSTRUCTION

RESC
RENEWABLE EQUIPMENT SUPPLY, LLC
P.O. Box 108
189 River Rd.
Rhinebeck, NY 12572
Office: 518.674.3684
Mobile: 518.369.9960
Fax: 518.514.1212

PROJECT: PROJECT 92937
DWG BY: TSI
CHK BY: MPS
DATE: 07/18/11
SCALE: AS NOTED
DESCRIPTION: UTIL
PV SYSTEM (61.12kW)
SHEET No. BE4.06

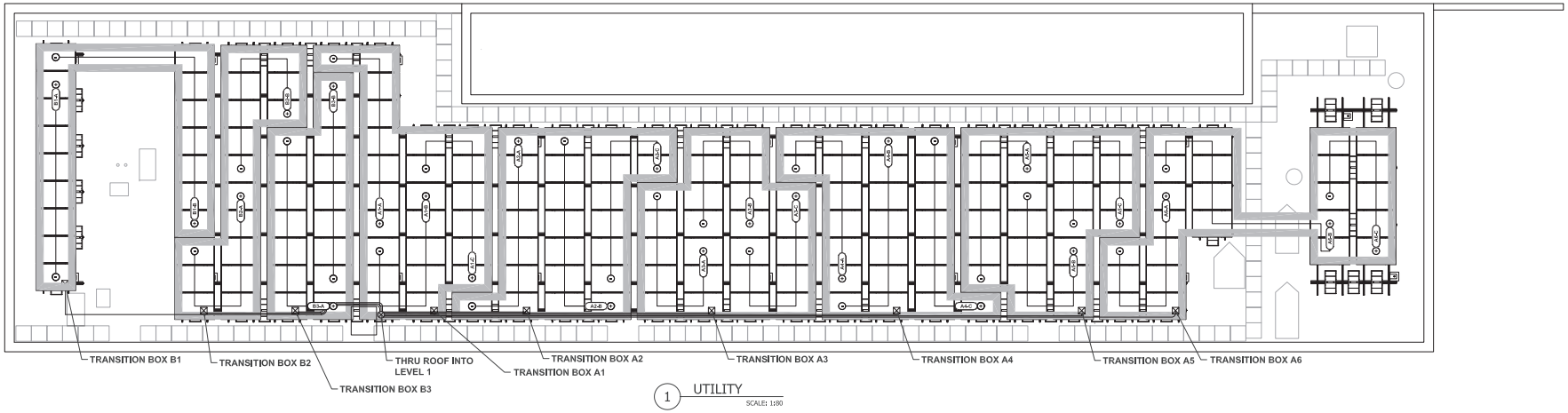

1 UTILITY
SCALE: 1:80

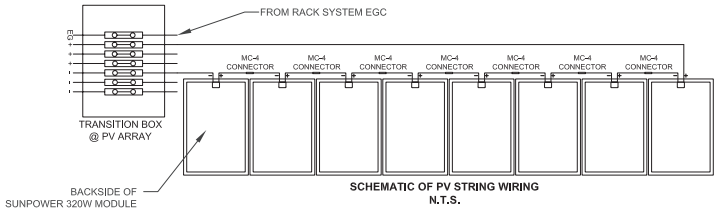

SCHEMATIC OF PV STRING WIRING
N.T.S.

METRIC/ENGLISH CONVERSION TABLE		METRIC/ENGLISH CONVERSION TABLE	
CONDUIT		WIRE	
TRADE SIZE (INCHES)	METRIC SIZE (mm)	AWG SIZE (#)	METRIC SIZE (mm2)
1/2	16	18	1
3/4	21	16	1.5
1	27	14	2.5
1-1/4	35	12	4
1-1/2	41	10	6
2	53	8	10
2-1/2	63	6	16
3	78	4	25
		2	35
		1	50
		1/0	70
		2/0	70
		3/0	95
		4/0	120

ALL SCALES BASED ON FULL SIZED DRAWING 24"x36"

REVISED: 05/23/12 -FINALIZED LAYOUT PER OBSTRUCTIONS
REVISED: 12/30/11 -ISSUE FOR CONSTRUCTION

RESC
RENEWABLE EQUIPMENT SUPPLY, LLC
P.O. Box 108
189 River Rd.
Rhinebeck, NY 12572
Office: 518.674.3684
Mobile: 518.369.9960
Fax: 518.514.1212

PROJECT: PROJECT 92937
DWG BY: TSI
CHK BY: MPS
DATE: 07/18/11
DESCRIPTION: UTIL PV LAYOUT
SCALE: AS NOTED
SHEET No. BE4.07

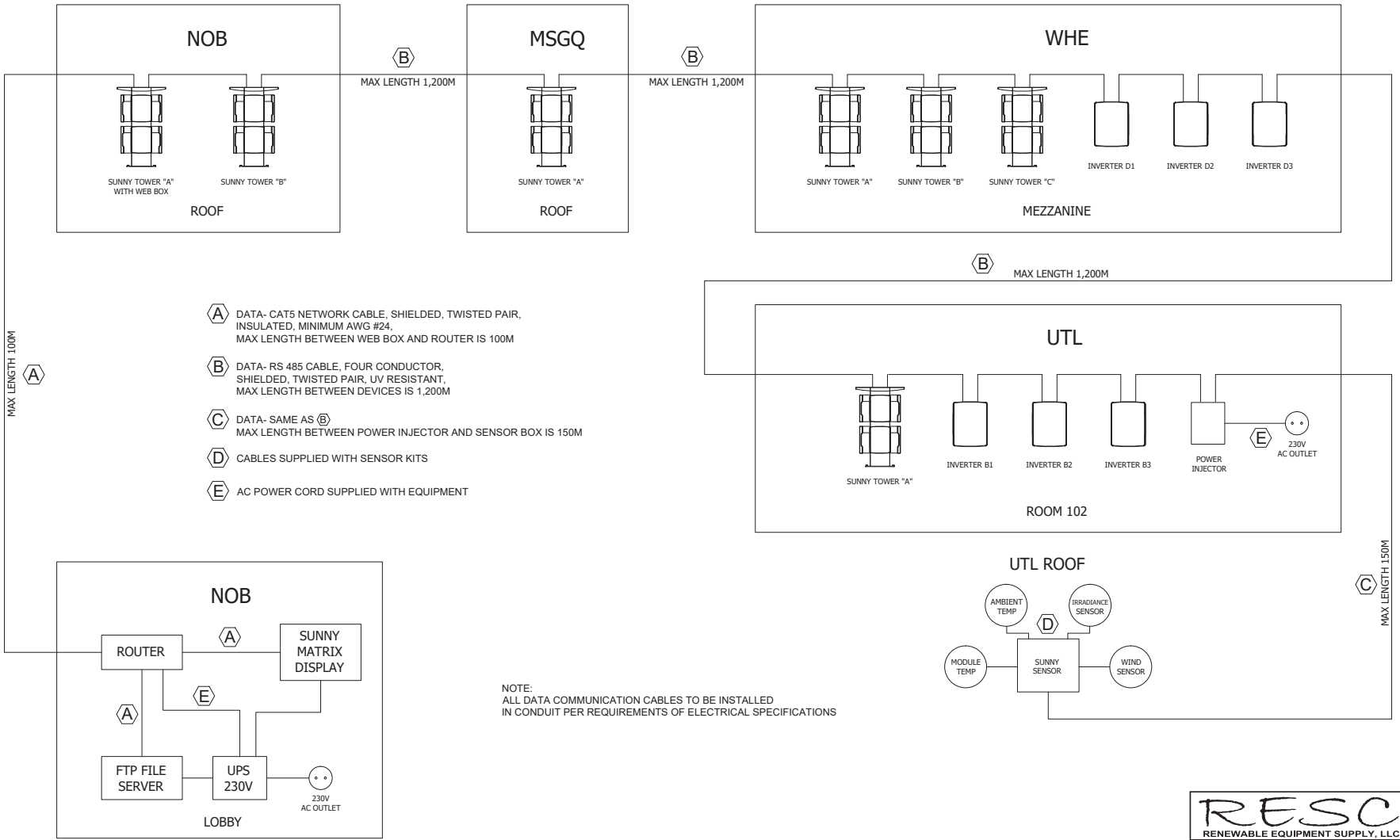

RESC
RENEWABLE EQUIPMENT SUPPLY, LLC

P.O. Box 108
189 River Rd.
Rhinebeck, NY 12572
Office: 518.674.3684
Mobile: 518.369.9960
Fax: 518.514.1212

PROJECT: PROJECT 92937

DWG BY: TSI | CHK BY: MPS

DATE: 07/18/11

SCALE: AS NOTED

DESCRIPTION: **DATA ACQUISITION SYSTEM (DAS) CABLING**

SHEET No. BE6.01