ELECTRICAL SYMBOL LIST

SYMBOL	DESCRIPTION
J, J	JUNCTION OR PULL BOX - CEILING, WALL MOUNTED. SIZE PER N.E.C. UNLESS NOTED OTHERWISE.
	CONTROL EQUIPMENT
	WIRING CONCEALED ABOVE CEILING OR IN WALL (INSULATED CONDUCTOR CONFIGURATION AS REQUIRED AND GROUND PER CODE) (5).
	WIRING BELOW GRADE OR BELOW FINISHED SLAB (INSULATED CONDUCTOR CONFIGURATION AS REQUIRED AND GROUND PER CODE) (5).
	ELECTRICAL PANEL: 120/208 VOLT - SURFACE, RECESSED MOUNTED
	ELECTRICAL PANEL: 277/480 VOLT - SURFACE, RECESSED MOUNTED
1	PLAN NOTE - REFER TO NOTES ON DRAWING.
	EQUIPMENT CONNECTION NOTE - SEE SCHEDULE.
	EQUIPMENT CONNECTION - PROVIDE LOCAL DISCONNECT AT UNIT W/FUSE PROTECTED WHERE REQUIRED (SEE EQUIPMENT PLANS AND SCHEDULES TO INCLUDE DOCUMENTS FOR EQUIPMENT PROVIDED UNDER OTHER DIVISIONS FOR CONNECTION REQUIREMENTS)
	FSS WITHIN SITE OF EQUIPMENT (FUSE SIZE AS REQUIRED BY SUPPLIER)
	GFCI DUPLEX RECEPTACLE, NEMA 5-20R (1)
(E)	EXISTING TO REMAIN

SYMBOL NOTES

(1) PROVIDE GFCI OUTLET FOR EACH LOCATION INDICATED AND WHERE REQUIRED BY CODE. USE OF FEED THRU NEUTRAL/PROTECTION IS NOT ACCEPTABLE.

CIRCUIT CONNECTION LEGEND

[P3] ← INDICATES CIRCUIT SOURCE PANEL (TYPICAL FOR ROOM/SPACE)

2,3 ← INDICATES CIRCUITS TO BE CONNECTED (ADJACENT TO DEVICE)

ABBREVIATIONS

A	AMP,AMPERE (RATING AS INDICATED)
AFF	ABOVE FINISHED FLOOR (TO CENTERLINE UNO)
C, CDT	CONDUIT
C/B	CIRCUIT BREAKER
CFSS	COMBINATION FUSED STARTER SWITCH
ECB	ENCLOSED CIRCUIT BREAKER
G, GND	EQUIPMENT GROUND
FSS	FUSED SAFETY SWITCH
MCB	MAIN CIRCUIT BREAKER
MLO	MAIN LUGS ONLY
NEC	NATIONAL ELECTRICAL CODE (LATEST EDITION UNO)
NFSS	NON-FUSED SAFETY SWITCH
P	POLE
PC	PC/COMMUNICATION OUTLET
UNO	UNLESS NOTED OTHERWISE
V	VOLTAGE (RATING AS INDICATED)

DEMOLITION LEGEND

DESIGNATION	DESCRIPTION
(N)	NEW EQUIPMENT
(E)	EXISTING EQUIPMENT TO REMAIN
(R)	EXISTING EQUIPMENT RELOCATED
(X)	EXISTING EQUIPMENT TO BE REMOVED
(X/R)	EXISTING EQUIPMENT TO BE REMOVED AND RELOCATED

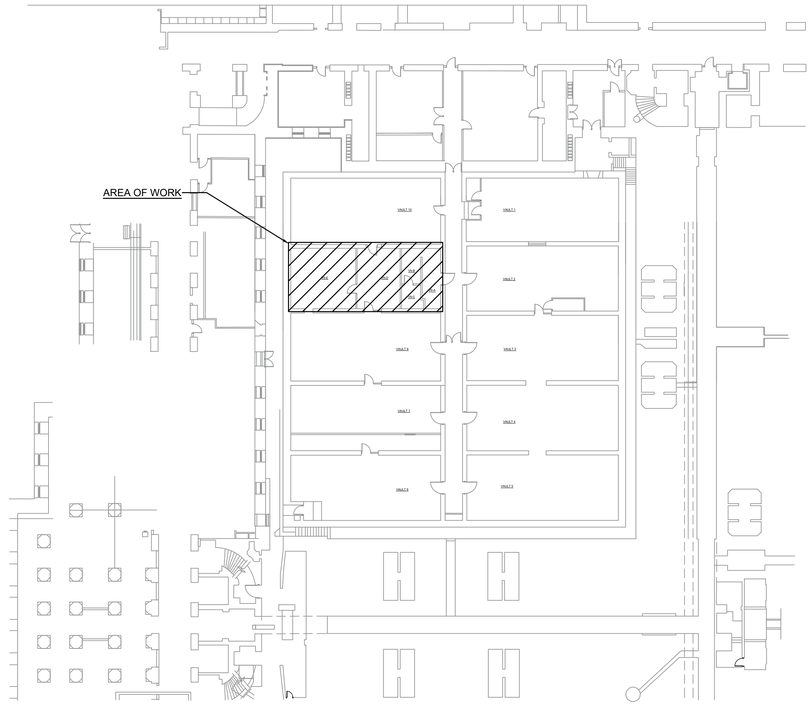

KEYPLAN

NO SCALE

GENERAL REQUIREMENTS

1. REFER TO THE SPECIFICATIONS FOR ADDITIONAL REQUIREMENTS OF THIS PROJECT.
2. US DEPARTMENT OF TREASURY - PROJECT MANAGER (PM) TO REVIEW AND APPROVE THE WORK. SUPPLEMENTAL DOCUMENTS OR INSTRUCTIONS BY THE (PM) TO BE PART OF THE SCOPE OF WORK.

SPECIAL CONDITIONS

A. DEMOLITION COORDINATION:

1. NOTIFY THE (PM) OF ANY WORK THAT MAY DISRUPT OTHER AREAS OUTSIDE OF THE WORK AREA.

B. WIRING REQUIREMENTS:

1. WIRING METHOD SHALL BE AS REQUIRED PER CODE FOR BUILDING CONSTRUCTION TYPE AND EACH SPACE FUNCTION.
2. PROVIDE QUANTITY OF CONDUCTORS REQUIRED TO INCLUDE EQUIPMENT GROUNDING PER CODE. WIRING SHOWN ON PLAN FOR POWER AND SWITCH CONTROL CLARITY ONLY.
3. PROVIDE DEDICATED NEUTRAL CONDUCTOR FOR ALL RECEPTACLE AND LIGHTING CIRCUITS. NEUTRALS CAN BE SHARED FOR 20 AMP CIRCUITS ONLY IF OVERSIZED.
4. CONDUCTOR AWG SIZE SHALL BE AS REQUIRED BY CODE AND ADJUSTED FOR VOLTAGE DROP.

ELECTRICAL DRAWING LIST

No.	Sheet No.	Sheet Title
1	E001	ELECTRICAL COVER SHEET
2	E101	VAULT 9 PLAN - ELECTRICAL
3	E102	VAULT ELECTRIC ROOM
4	E201	ELECTRICAL SCHEDULES AND SPECIFICATIONS

PRICING SET 6/26/2026

SRBR No: 25111-45

ENGINEER :

SRBR

MEP Consulting Engineers since 1959

757 Frederick Road Suite 300 - Catonsville, Maryland 21228

Phone: 410.869.7282 Fax: 410.869-7362

Web: www.SRBRengineers.com

CLIENT : US TREASURY

PENNSYLVANIA AVE WASHINGTON, DC

PROJECT : US TREASURY VAULTS #4 & 5 AC UNIT REPLACEMENT

"Professional Certification. I hereby certify that these documents were prepared or approved by me, and that I am a duly licensed professional engineer under the laws of the state of Washington DC *License No.* PE905594 *, Expiration Date:* 8-31-2026 *."*

SHEET TITLE :

ELECTRICAL COVER SHEET

REVISION :

DATE : 6-26-2026

SRBR NO. : 25111-45

DRAWING NO. :

E001

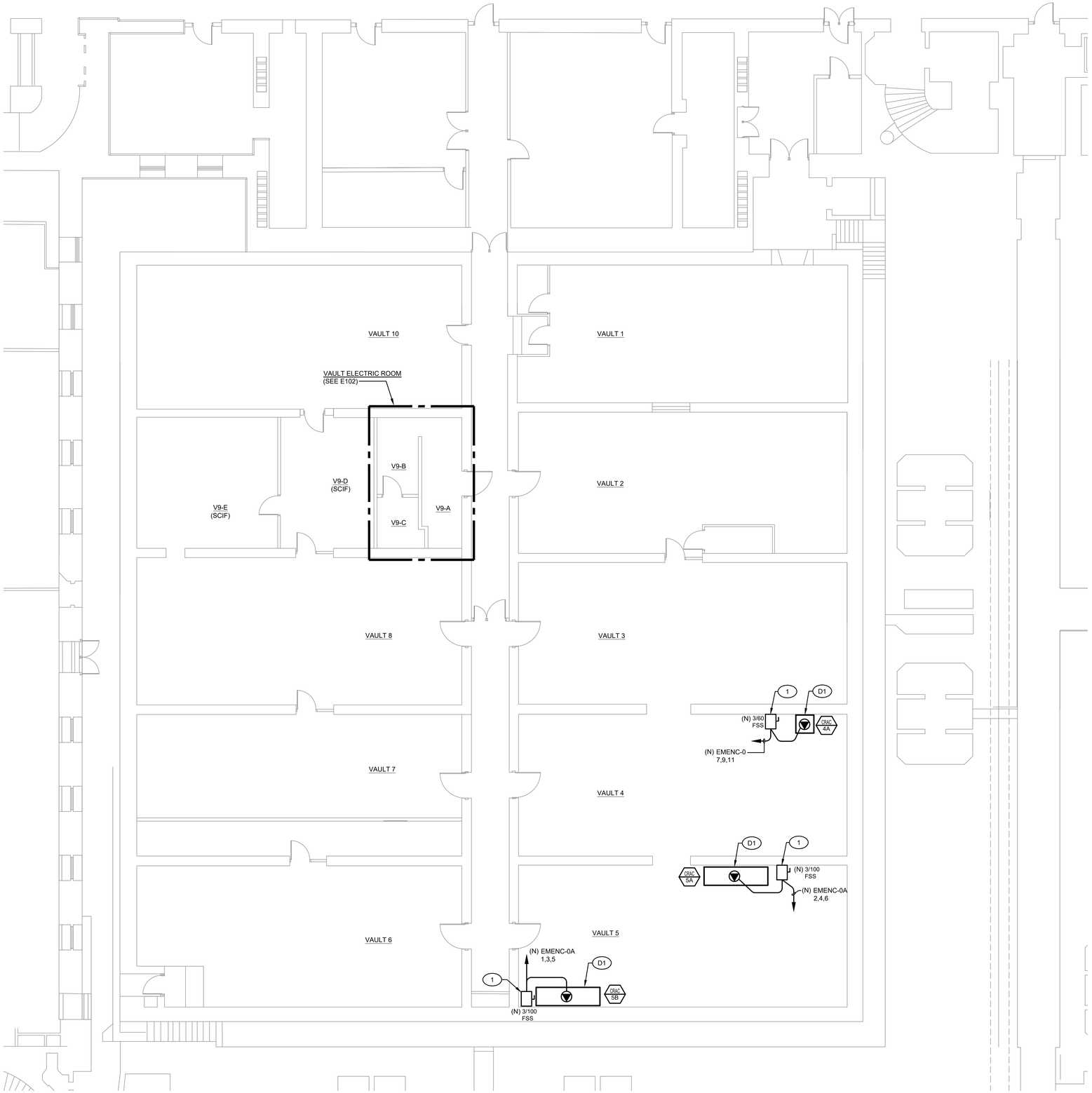

VAULT 9 PLAN - ELECTRICAL

SCALE: 1/8" = 1'-0"

0 2' 4' 8' 16'

GENERAL NOTES

1. COORDINATE DEMOLITION AND REPLACEMENT OF CRAC UNIT SEQUENCING WITH MECHANICAL WORK TO MAINTAIN COOLING AT ALL TIMES.

PLAN NOTES (DEMOLITION)

D1 DISCONNECT EXISTING CRAC UNIT AND ADJUST EXISTING DISCONNECT TO COORDINATE WITH NEW UNIT LOCATION OF REPLACEMENT AND WORK-IN CLEARANCE REQUIREMENTS OF THE UNIT AND DISCONNECT.

PLAN NOTES (NEW WORK)

1 PROVIDE NEW POWER CIRCUITS & CONNECT NEW CRAC UNITS. PROVIDE NEW FUSE SIZED PER EQUIPMENT NAME PLATE.

PRICING SET 6/26/2026

SRBR No: 25111-45

ENGINEER :
SRBR
MEP Consulting Engineers since 1959
757 Frederick Road Suite 300 - Catonsville, Maryland 21228
Phone: 410.869.7282 Fax: 410.869-7362
Web: www.SRBRengineers.com

CLIENT :
US TREASURY
PENNSYLVANIA AVE
WASHINGTON, DC

PROJECT :
US TREASURY
VAULTS #4 & 5 AC UNIT
REPLACEMENT

"Professional Certification. I hereby certify that these documents were prepared or approved by me, and that I am a duly licensed professional engineer under the laws of the state of Washington DC *License No.* PE905594 *, Expiration Date:* 8-31-2026 *."*

SHEET TITLE :
VAULT 9 PLAN
ELECTRICAL

REVISION :

DATE : 6-26-2026

SRBR NO. : 25111-45

DRAWING NO. :
E101

ELECTRICAL SPECIFICATIONS

SECTION 16A - ELECTRICAL WORK

1. GENERAL:

A. The GENERAL and SPECIAL CONDITIONS listed under Division 1 shall govern this work where applicable.

B. The contractor shall furnish all labor, materials, equipment and services necessary for the construction of the complete functioning electrical system.

C. All labor and materials, although not specifically mentioned, but necessary for the completion of the work and the successful operation of the electrical systems, shall be as if specifically indicated.

D. Materials and equipment installed as part of the permanent installation shall be new unless otherwise indicated or specified, and shall be approved by the Underwriter's Laboratories, inc., for installation in each particular case where standard's have been established.

E. The project includes work with_in a secure space. All wiring to be surface mounted at SCIF perimeter, above raised floors or below drop ceiling. Exposed locations shall be pre-approved the architect prior to rough-in. Exposed wiring at finished areas shall be installed in conduit or surface metal raceway per architects approval. Exposed surfaces shall be primed and finish painted as directed.

2. SCOPE:

A. The Contractor shall provide all labor and materials required to install a completed system of electrical work as indicated on the drawings and/or herein specified. Work includes but is not limited to the following:

1. Power feeders and safety switches.
2. Final connections of mechanical equipment, electrical motors.

3. REGULATIONS AND CODE REQUIREMENTS:

A. All work shall conform to the requirements of the latest editions of the following codes, regulations and specifications.

1. National Electrical Code (NFPA 70)
2. National Fire Protection Association (NFPA)
3. Underwriters Laboratories, Inc.
4. Building Code
5. Local and state requirements

4. SHOP DRAWINGS:

A. The Contractor shall submit shop drawings (electronically) and manufacturer's catalog cuts showing all details of all equipment to be furnished.

5. GUARANTEE:

A. In addition to the guarantee obligations herein before specified in other divisions, the Contractor shall guarantee the system installation free from all mechanical and electrical defects for the period of one year from date of final acceptance by the Owner.

6. DRAWINGS AND SPECIFICATIONS:

A. The drawings are intended to show the general arrangement of the outlets and equipment. Door swings shall checked for arrangement of switches which shall be, installed on the latch side. Contractor shall check structural plans, mechanical plans and specifications so that he may coordinate his work with these trades.

7. GROUNDING:

A. Grounding of all conduit, panelboards, boxes, cabinets and equipment shall conform to the requirements of the latest edition of the National Electric Code.

B. All branch circuits shall include a bonded raceway and conductor. Equipment ground per NFPA 70, article 250 in addition to tick marks indicated on wiring.

8. DISTRIBUTION EQUIPMENT:

A. Not Applicable.

9. EQUIPMENT CONNECTIONS AND MOTOR STARTERS:

A. All power wiring shall be installed and connected under this section, unless already provided by on the equipment.

10. CONDUCTORS:

A. All secondary conductors shall be copper, 98% conductivity covered with 600 volt standard type THW or THHN Insulation. AWG size shall be per NFPA 70 or larger where indicated on the plans.

B. All wiring shall be in strict accordance with the latest edition of the National Electrical Code.

C. All wire number 8 and larger shall be stranded.

D. A color coding system shall be used throughout the building network of feeders and circuits and used as a basis of balancing the load within 10%.

E. Neutral conductors for isolated ground circuits shall be dedicated or sized 1.73 times larger for shared neutral circuits.

F. Upon completion of branch circuit wiring, the Contractor shall check and adjust circuit breaker arrangements to assure system load balance is within +10% or -10% across all three phases.

11. WIRING METHODS:

A. Branch circuit and feeders rated shall be conductors ran in conduit.

B. Conduit and wire sizes shall be per NFPA 70 or larger as indicated on the plans.

C. Type MC Cable is acceptable for branch circuits, in concealed areas or utility rooms

12. OUTLET BOXES:

A. Outlet boxes in concealed locations shall be galvanized stamped steel of sizes required by the NEC.

B. Boxes in exposed locations shall be cast, with gasketed cover.

C. Provide covers for all boxes.

13. PULL-BOXES AND JUNCTION BOXES:

A. Pull-boxes shall be provided as shown or wherever required to facilitate pulling of wires and cables, or as junction points. All such boxes shall be installed in accessible locations.

B. All pull boxes with-In SCIF must be able to be secured/locked or visible seal attached to detect the box has been opened.

14. WIRING DEVICES:

A. 20 AMP rated receptacles shall be used for all dedicated 20 AMP circuit connections per NFPA 70 requirements.

15. LIGHTING FIXTURES:

A. Not Applicable.

SECTION 16B - DEMOLITION WORK

1. SCOPE:

A. Material and equipment made superfluous by reason of the new work shall become the property of the contractor and shall be removed from the site unless the equipment is specifically indicated to be retained by the Owner, in which case the contractor shall disconnect & remove the equipment and return to the Owner.

B. The contractor shall furnish all labor, material and equipment necessary to complete the demolition work.

C. The work shall include removal and relocation of existing equipment as shown on the drawings.

2. SITE VISIT:

A. Prior to preparing the bid, the contractors shall visit the site and familiarize themselves with all existing conditions. Make all necessary investigations as to locations of utilities and all other matters which can affect the work. No additional compensation will be made to the contractor as a result of failure to get familiar with the existing conditions under which the work must be performed.

3. OUTAGES:

A. All electrical/telephone service work which will interfere with the normal use of occupied areas in any manner, shall be done at such times as shall be mutually agreed upon by the Contractor and the Owner.

B. Unless otherwise specified, outages any services, required for the performance of this contract and affecting areas other than the immediate work area shall be scheduled at least thIRTY (30) days in advance. All such outages shall be performed on other than normal duty hours.

C. Outages during business hours must be approved by the treasury prior to commencement of the work.

4. CUTTING AND PATCHING:

A. Cutting and patching are not anticipated for this scope of work.

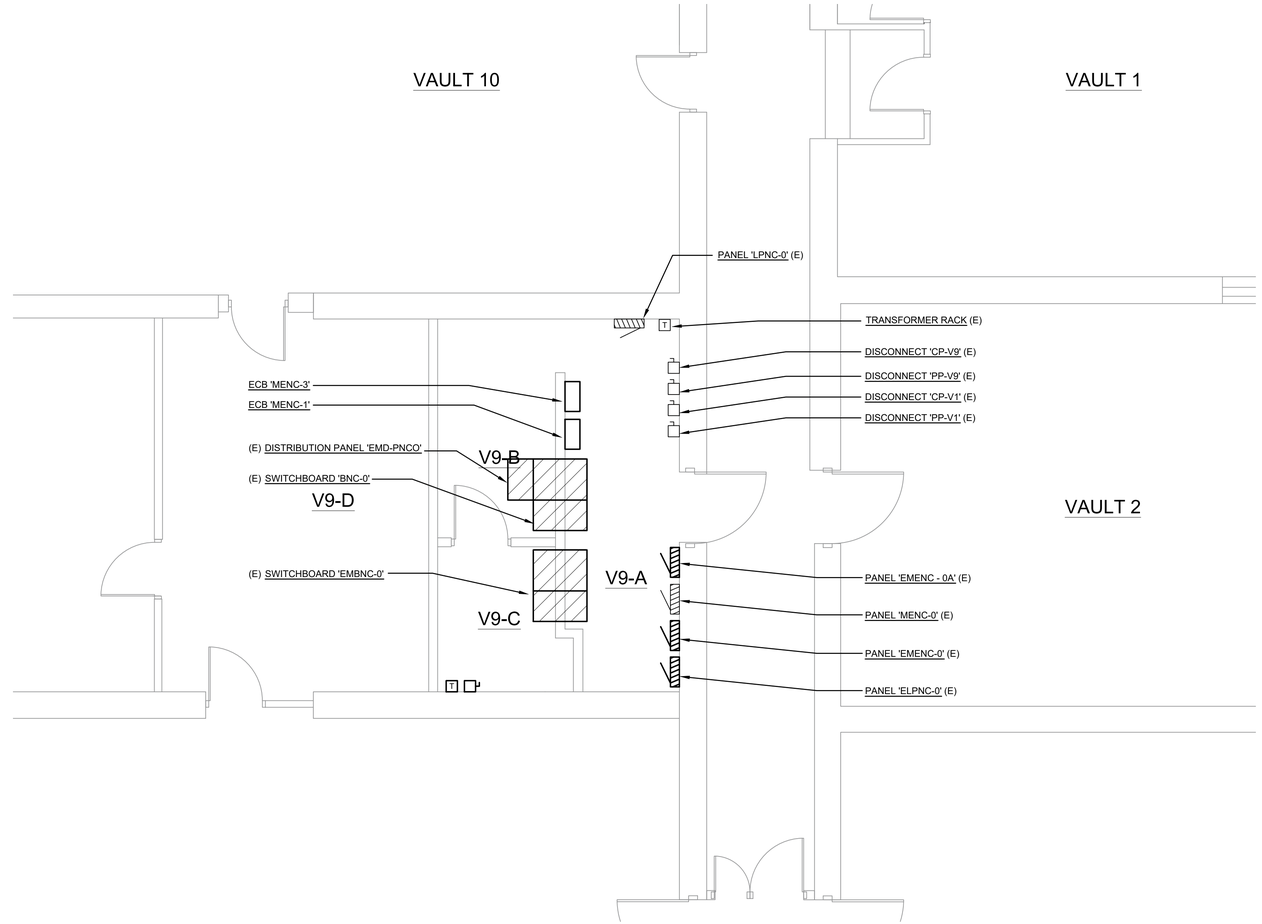

VAULT ELECTRIC ROOM

SCALE: 1/4" = 1'-0"

0 1' 2' 4' 8'

PRICING SET 6/26/2026

SRBR No: 25111-45

ENGINEER :

SRBR

MEP Consulting Engineers since 1959

757 Frederick Road Suite 300 - Catonsville, Maryland 21228

Phone: 410.869.7282 Fax: 410.869-7362

Web: www.SRBRengineers.com

CLIENT :

US TREASURY

PENNSYLVANIA AVE
WASHINGTON, DC

PROJECT :

US TREASURY
VAULTS #4 & 5 AC UNIT
REPLACEMENT

"Professional Certification. I hereby certify that these documents were prepared or approved by me, and that I am a duly licensed professional engineer under the laws of the state of Washington DC *License No.* PE905594 *, Expiration Date:* 8-31-2026 *."*

SHEET TITLE :

VAULT ELECTRIC ROOM

REVISION :

DATE : 6-26-2026

SRBR NO. : 25111-45

DRAWING NO. :

E102

PANEL EMENC- 0 (E)

VOLTAGE: 277 / 480
PHASE, WIRE: 3 PH , 4 W

200 AMP MAIN C/B
FED FROM SWBNC-0

A.I.C.: (E)
MOUNTED: SURFACE

CKT	SERVING	C/B P	C/B TRIP	WIRE QTY	WIRE AWG	KVA	PH	KVA	WIRE QTY	WIRE AWG	C/B P	C/B TRIP	SERVING	CKT
1	CRACU-V10 (E)	3	35			7.5	A	4.0			3	70	CRAC-V7 (E)	2
3						7.5	B	4.0						4
5						7.5	C	4.0						6
7	**CRAC-V4 (2)**	**3**	**40**	**3**	**8**	**7.8**	A	6.5			3	35	CRACU-V 10 (E)	8
9	**GND**			**1**	**10**	**7.8**	B	6.5						10
11						**7.8**	C	6.5						12
13	BUSSED SPACE						A						BUSSED SPACE	14
15	BUSSED SPACE						B						BUSSED SPACE	16
17	BUSSED SPACE						C						BUSSED SPACE	18

TOTAL DEMAND KVA (PER PHASE): A: 16.7 B: 16.7 C: 16.7 DESIGN KVA: 50 DESIGN AMPS: 60

NOTES:

CONNECTED KVA 77.3

(1) ALL CIRCUIT BREAKERS ARE EXISITNG TO REMAIN UNO.
(2) REMOVE EXISITNG FEEDER AND BREAKER. PROVIDE NEW BREAKER AND CONNECT NEW FEEDER.

PANEL EMENC- 0A (E)

VOLTAGE: 277 / 480
PHASE, WIRE: 3 PH , 4 W

225 AMP MAIN C/B
FED FROM EMBNC-0

A.I.C.: 14k
MOUNTED: SURFACE

CKT	SERVING	C/B P	C/B TRIP	WIRE QTY	WIRE AWG	KVA	PH	KVA	WIRE QTY	WIRE AWG	C/B P	C/B TRIP	SERVING	CKT
1	**CRAC-V5B (2)**	**3**	**80**	**3**	**3**	**17.7**	A	**17.7**	**3**	**3**	**3**	**80**	**CRAC-V5A (2)**	2
3	**GND**			**1**	**8**	**17.7**	B	**17.7**	**1**	**8**			**GND**	4
5						**17.7**	C	**17.7**						6
7	CRAC-V3 (E)	3	30			6.5	A	12.5			3	60	(E)	8
9						6.5	B	12.5					CRAC-V3	10
11						6.5	C	12.5						12
13	BUSSED SPACE						A	7.1			3	50	CRAC V 9-1 (E)	14
15	BUSSED SPACE						B	7.1						16
17	BUSSED SPACE						C	7.1						18
19	BUSSED SPACE						A	7.1	3	8	3	50	CRAC V 9 -1A (E)	20
21	BUSSED SPACE						B	7.1	1	10			GND	22
23	BUSSED SPACE						C	7.1						24
25	BUSSED SPACE						A						BUSSED SPACE	26
27	BUSSED SPACE						B						BUSSED SPACE	28
29	BUSSED SPACE						C						BUSSED SPACE	30

TOTAL DEMAND KVA (PER PHASE): A: 50.8 B: 50.8 C: 50.8 DESIGN KVA: 152 DESIGN AMPS: 183

NOTES:

CONNECTED KVA 205.8

(1) ALL CIRCUIT BREAKERS ARE EXISITNG TO REMAIN UNO.
(2) REMOVE EXISITNG FEEDER AND BREAKER. PROVIDE NEW BREAKER AND CONNECT NEW FEEDER.

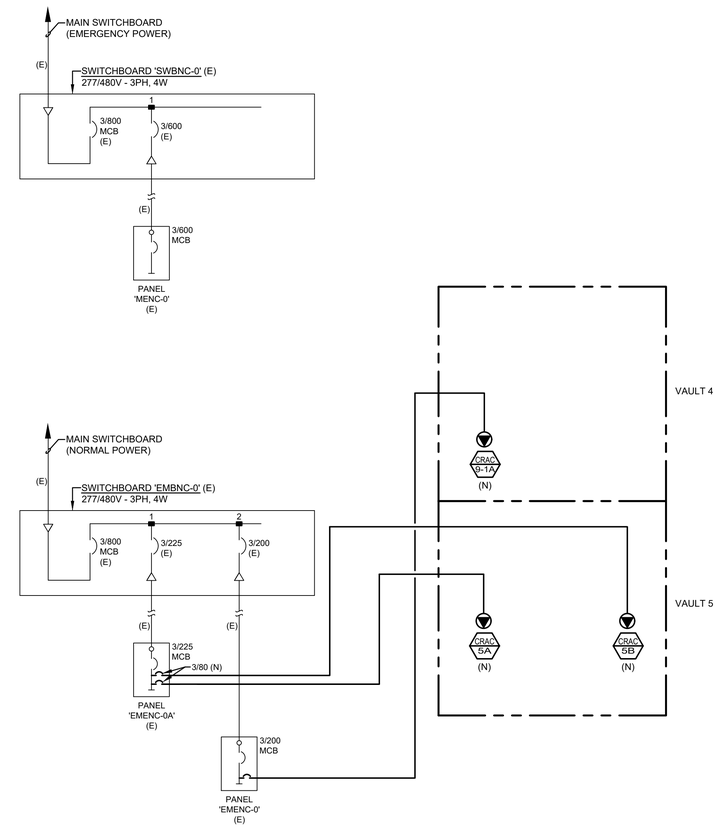

POWER DISTRIBUTION DIAGRAM

NO SCALE

PRICING SET 6/26/2026
SRBR No: 25111-45

ENGINEER :

SRBR
MEP Consulting Engineers since 1959
757 Frederick Road Suite 300 - Catonsville, Maryland 21228
Phone: 410.869.7282 Fax: 410.869-7362
Web: www.SRBRengineers.com

CLIENT :

US TREASURY
PENNSYLVANIA AVE
WASHINGTON, DC

PROJECT :

US TREASURY
VAULTS #4 & 5 AC UNIT
REPLACEMENT

"Professional Certification. I hereby certify that these documents were prepared or approved by me, and that I am a duly licensed professional engineer under the laws of the state of Washington DC *License No.* PE905594 *, Expiration Date:* 8-31-2026 *."*

SHEET TITLE :

ELECTRICAL SCHEDULES AND SPECS

REVISION :

DATE : 6-26-2026

SRBR NO. : 25111-45

DRAWING NO. :

E201