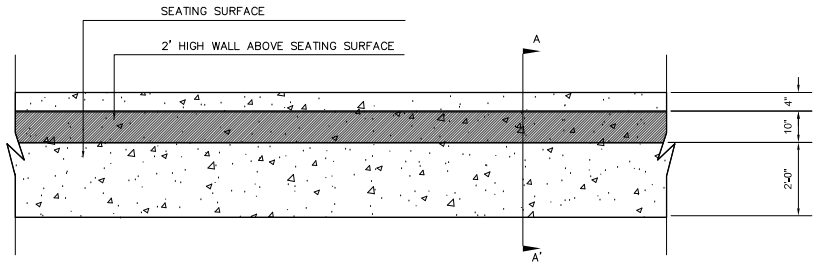

PLAN VIEW

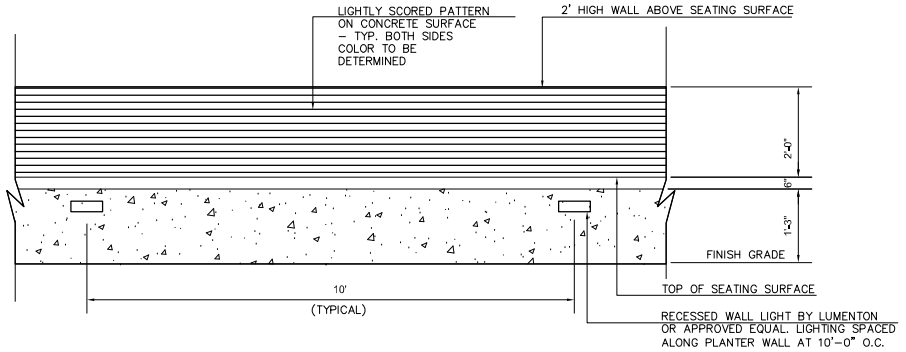

ELEVATION VIEW

NOTE: SLOPE ALL CAPS MINIMUM 1% TO ALLOW FOR DRAINAGE OFF CAP. SLOPE CAPS ADJACENT TO BUILDING WALLS AWAY FROM BUILDING TO DIRECT WATER TO PLANTER.

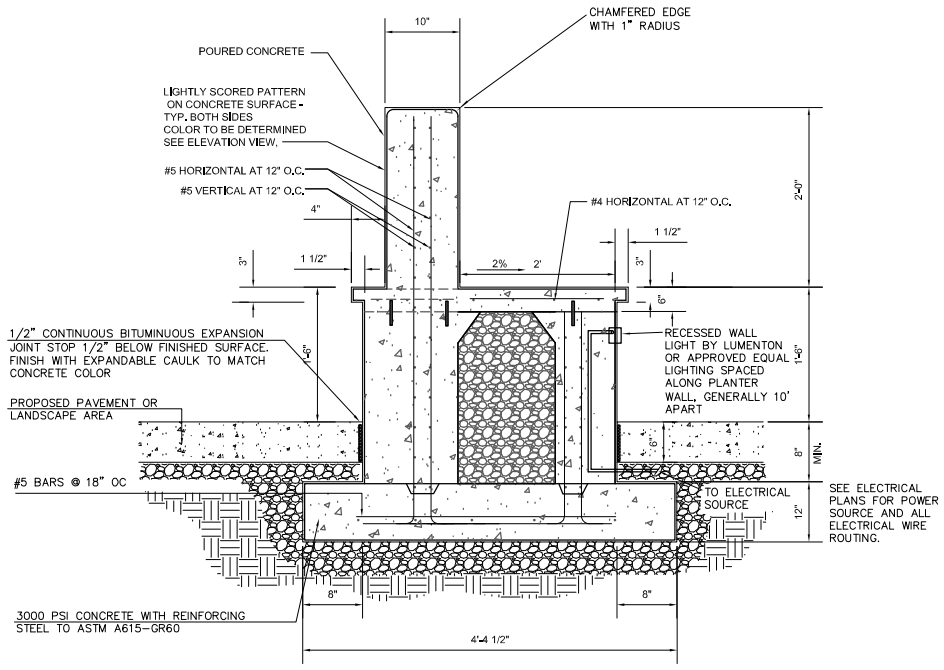

SECTION A-A VIEW

NOTE 1: CONTRACTOR SHOULD REFER TO STRUCTURAL ENGINEERING PLAN SET FOR ALL STRUCTURAL RECOMMENDATIONS AND ELECTRICAL PLANS FOR ELECTRICAL WIRE ROUTING RELATED TO THIS DETAIL. DETAIL IS SHOWN FOR DIMENSIONAL REFERENCE AND OVERALL DESIGN INTENT ONLY.

A1 / LP1.04 **SEAT WALL ON EAST & WEST SIDE OF SPORTS COURT AREA**
NTS

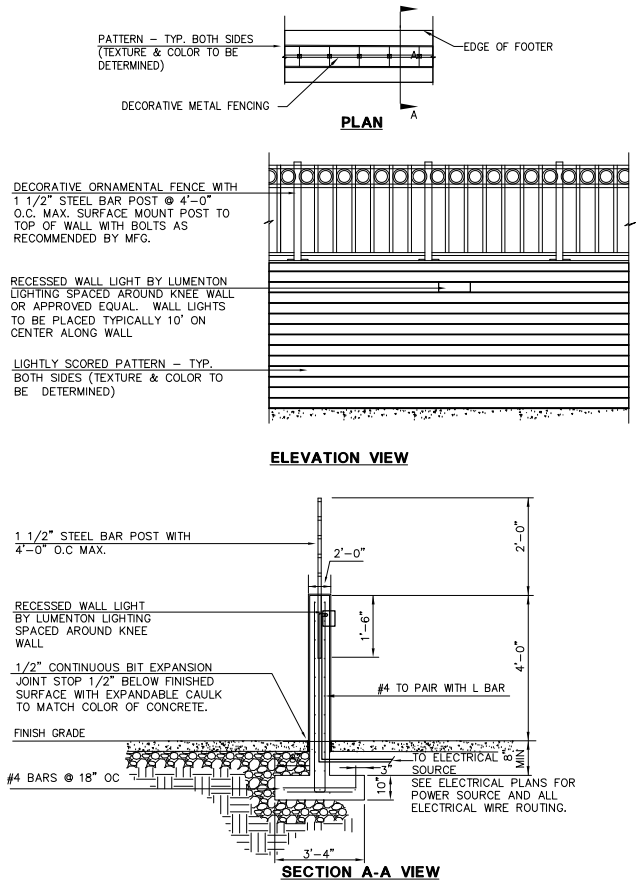

PLAN

ELEVATION VIEW

SECTION A-A VIEW

NOTE 1: CONTRACTOR SHOULD REFER TO STRUCTURAL ENGINEERING PLAN SET FOR ALL STRUCTURAL RECOMMENDATIONS AND ELECTRICAL PLANS FOR ELECTRICAL WIRE ROUTING RELATED TO THIS DETAIL. DETAIL IS SHOWN FOR DIMENSIONAL REFERENCE AND OVERALL DESIGN INTENT ONLY.

A2 / LP1.04 **KNEE WALL WITH DECORATIVE FENCING**
NTS

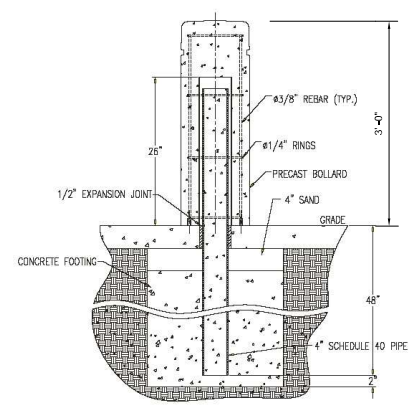

A4 / LP1.03 **SECURITY BOLLARD DETAIL**
NTS

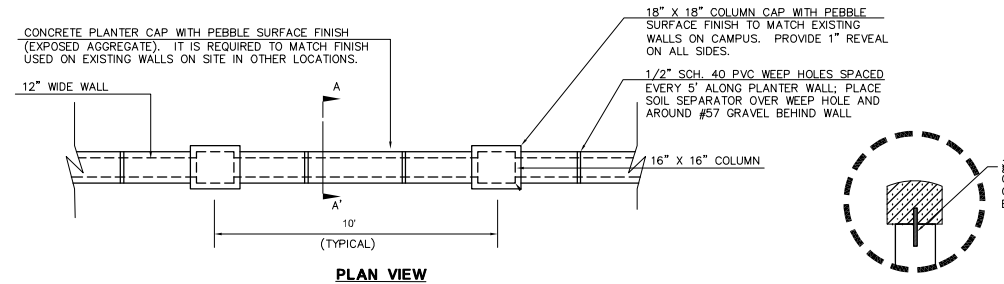

PLAN VIEW

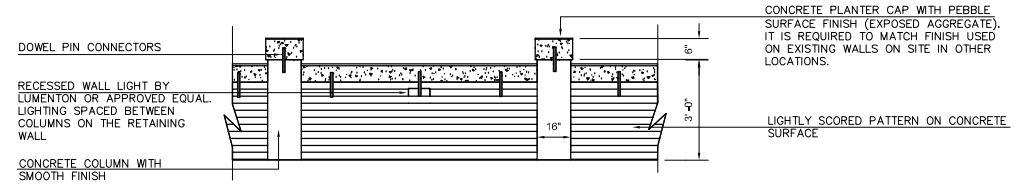

ELEVATION VIEW

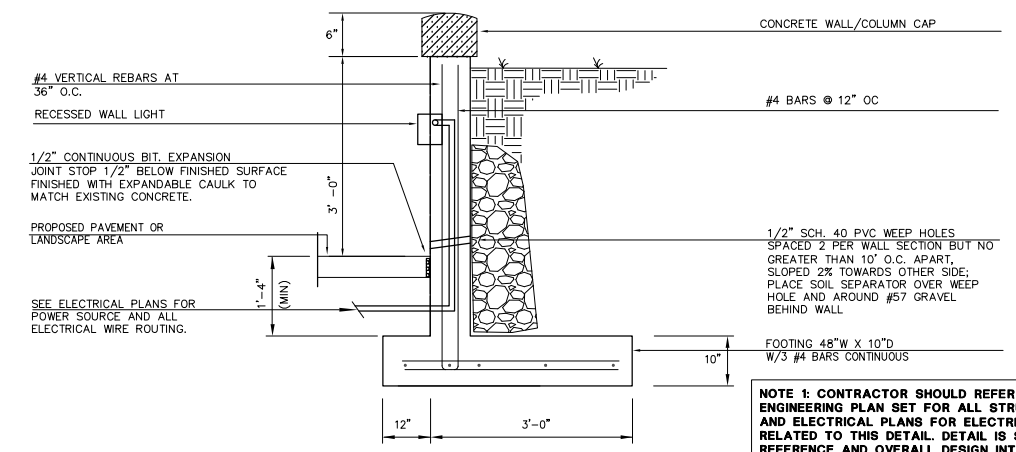

SECTION A-A VIEW

NOTE 1: CONTRACTOR SHOULD REFER TO STRUCTURAL ENGINEERING PLAN SET FOR ALL STRUCTURAL RECOMMENDATIONS AND ELECTRICAL PLANS FOR ELECTRICAL WIRE ROUTING RELATED TO THIS DETAIL. DETAIL IS SHOWN FOR DIMENSIONAL REFERENCE AND OVERALL DESIGN INTENT ONLY.

A3 / LP1.03 **RETAINING WALL DETAIL**
NTS

1. SLOPE ALL CAPS MINIMUM 1% TO ALLOW FOR DRAINAGE OFF CAP. SLOPE CAPS ADJACENT TO BUILDING WALLS AWAY FROM BUILDING TO DIRECT WATER TO PLANTER.
2. LIGHTLY SCORED PATTERN ON OUTSIDE WALL

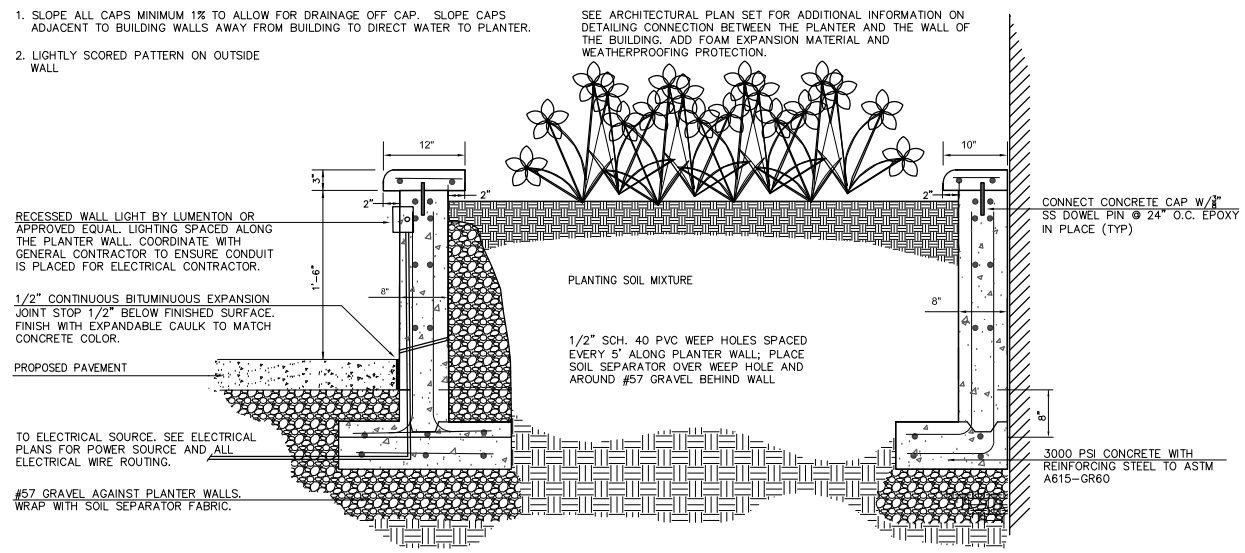

NOTE 1: CONTRACTOR SHOULD REFER TO STRUCTURAL ENGINEERING PLAN SET FOR ALL STRUCTURAL RECOMMENDATIONS AND ELECTRICAL PLANS FOR ELECTRICAL WIRE ROUTING RELATED TO THIS DETAIL. DETAIL IS SHOWN FOR DIMENSIONAL REFERENCE AND OVERALL DESIGN INTENT ONLY.

A5 / LP1.04 **NORTH COURTYARD - SOUTH EDGE PLANTER**
NTS

FINAL CONSTRUCTION DOCUMENTS
FULLY SPRINKLERED

Revisions:	Date

CONSULTANTS:

Cardno TBE
380 Park Place Blvd., Suite 300, Clearwater, Florida 33759
www.cardnotbe.com • 727.531.3505
Certificate of Authorization No. 3843
Landscape Architect: Andrew D. Hill, FL LA #6667073

REGISTERED LANDSCAPE ARCHITECT LA 6667073 STATE OF FLORIDA

ARCHITECT/ENGINEERS:

VOA ELLERBE BECKET
VOA/ELLERBE BECKET, LLC
4798 NEW BROAD ST.
SUITE 100
ORLANDO, FL 32814

Drawing Title: HARDSCAPE DETAILS (1)	Project Title: BAY PINES VAMC: INPATIENT & OUTPATIENT IMPROVEMENTS		Project Number: 516PR005
			Building Number:
Approved: Project Director	Location: BAY PINES, FL		Drawing Number: LP3.02
	Date: 10/29/2010	Checked: ADH	Drawn: JDP

Office of Construction and Facilities Management
Department of Veterans Affairs

VA FORM 08-6231
J:\00081\00081002.00\ACAD\dwg\CD-1\GI-Landscape.dwg