FEDERAL OFFICE BUILDING

RENOVATION OF SUITE 2453 AND ADDITION OF A NEW PRIVATE OFFICE

100% SUBMISSION
FOR REVIEW

04-28-2026

KEY PLAN

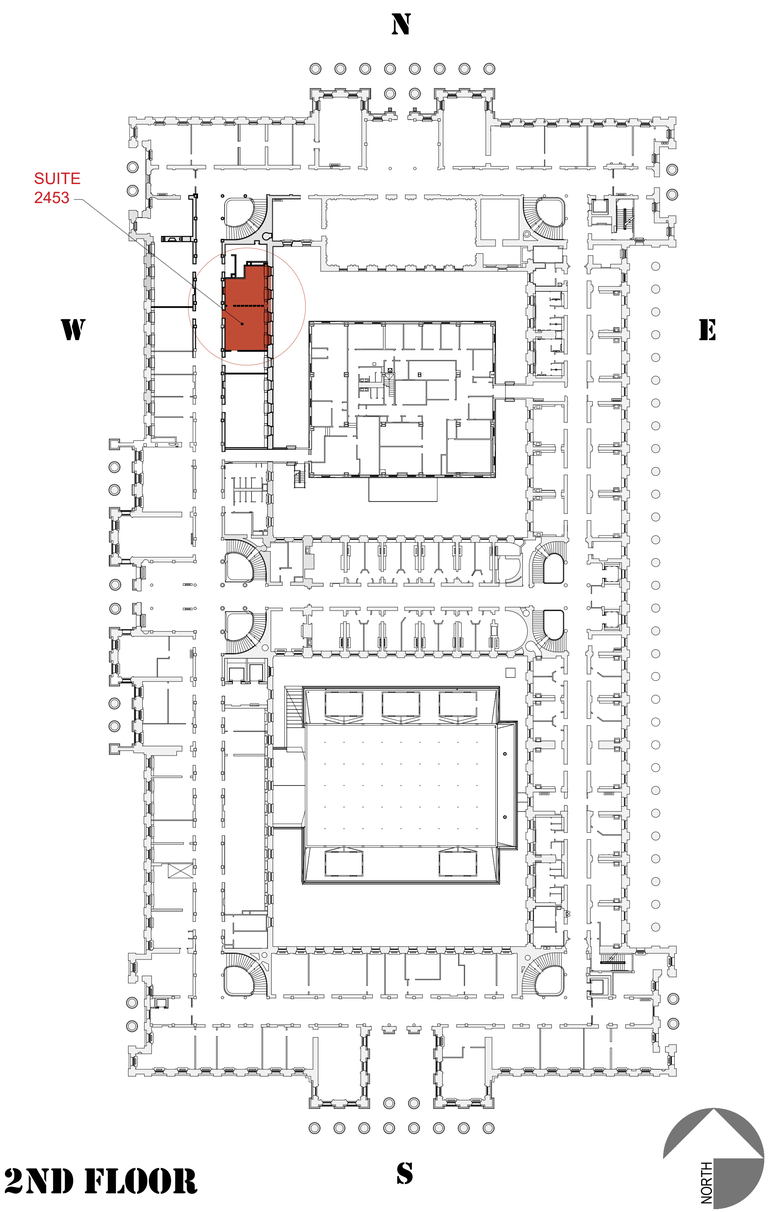

2ND FLOOR

PROJECT INFORMATION

PROJECT ADDRESS:

OCCUPANCY CLASSIFICATION: B,

BUILDING SPRINKLERS: AUTOMATIC SPRINKLER SYSTEM

HISTORIC OVERVIEW: THE BUILDING IS IN THE NATIONAL REGISTER OF HISTORIC PLACES

WORK DESCRIPTION

VESTIBULE 5436

A. ALL WORK NECESSARY TO ADD A PRIVATE OFFICE IN SUITE 2453 AFTER DEMOLISHING NON-ORIGINAL PARTITION

B. THE ENTIRE SUITE WILL BE REPAINTED AND THE CARPET WILL BE REPLACED AS WELL

REVIEW COMMENTS / NOTES

DRAWING INDEX

GENERAL

G-001	COVER SHEET	01 OF 21
G-002	NOTES, ABBREVIATIONS, AND SYMBOLS	02 OF 21

ARCHITECTURAL

AD 101	EXISTING & DEMOLITION WALLS AND FLOOR SYSTEM FLOOR PLAN	03 OF 21
AD 102	EXISTING & DEMOLITION RCP	04 OF 21
AD 201	EXISTING & DEMOLITION SECTIONS/ INTERIOR ELEVATIONS	05 OF 21
AD 202	EXISTING & DEMOLITION SECTIONS/ INTERIOR ELEVATIONS	06 OF 21
A-101	NEW WORK FLOOR PLAN W/O AND W/ FURNITURE	07 OF 21
A-102	NEW WORK RCP	08 OF 21
A-103	NEW WORK FLOOR PANELS W/O AND W/ FURNITURE	09 OF 21
A-201	NEW WORK FRAMING ELEVATIONS AND SECTIONS	10 OF 21
A-202	NEW WORK FRAMING ELEVATIONS AND SECTIONS	11 OF 21
A-203	NEW WORK FRAMING ELEVATIONS AND SECTIONS	12 OF 21
A-204	NEW WORK FRAMING ELEVATIONS AND SECTIONS	13 OF 21
A-301	WALL TYPE A	14 OF 21
A-302	WALL TYPE B	15 OF 21
A-501	WALL FRAMING DETAILS	16 OF 21
A-502	FLOOR PANEL SYSTEM ALTERATIONS DETAILS	17 OF 21
A-503	DOOR DETAILS (DOOR FRAME F-1 & LEAF TYPE A)	18 OF 21
A-601	FINISHES NOTES AND SCHEDULE	19 OF 21
A-602	DOOR AND HARDWARE SCHEDULE, DOOR ELEVATIONS	20 OF 21
A-701	BASIS OF DESIGN CUT SHEETS DOOR AND HARDWARE	21 OF 21

MERIDIEN GROUP

MERIDIEN GROUP, LLC
208 SOUTH KING ST. SUITE 303
LEESBURG, VA 20175
(703) 777-8285
www.meridiengroupllc.com

CITADEL
ARCHITECTURE | HISTORIC PRESERVATION | PLANNING | DESIGN

CERTIFICATIONS

KEY PLAN

REVISION NOTES

MARK	DATE	DESCRIPTION

GRAPHIC SCALE

CONTRACTORS

A/E CON. NO.	
A/E TASK NO.	
CONS. CONTR	
CONS. WORK	
PRIME A/E	MERIDIEN GROUP / CITADEL DCA
SUB A/E	

BUILDING

NAME	
STREET	
CITY/ST./ZIP	WASHINGTON, DC
BUILDING NO.	DC-
OTHER BUILDING NOs.	
FACILITY CODE	

PROJECT

PROJECT TITLE	FEDERAL OFFICE BUILDING MT 2453 OFFICE RENOVATION
PROJECT DESCRIPTION	RENOVATION OF SECOND FLOOR SUITE
PROJECT NO.	MT2453_26_004
GSA PM	BARBARA CHOATE
SUBMISSION	100% SUBMISSION FOR REVIEW
SUB. DATE	28 APRIL 2026

DRAWING

DRAWING TITLE	COVER SHEET
FILE NAME	
FLOOR NO.	2ND FLOOR
DRAWN BY	AGF DATE DRAFTED: 04/14/2026
CHECKED BY	LSP SHEET SIZE: 24 x 36
DRAWING NO.	G- 001

DISCIPLINE	SHEET TYPE	SEQUENCE
SHEET	1 OF	21

GENERAL CONSTRUCTION / WORK NOTES

1. OMISSIONS FROM THE DRAWINGS OR SPECIFICATIONS OF THE DESCRIPTION OF DETAILS OF WORK WHICH ARE MANIFESTLY NECESSARY TO CARRY OUT THE INTENT OF THE DRAWINGS AND SPECIFICATIONS OR ARE CUSTOMARILY PERFORMED SHALL NOT RELIEVE THE CONTRACTOR FROM PERFORMING SUCH OMITTED OR MIS-DESCRIBED DETAILS OF WORK BUT SHALL BE PERFORMED AS IF FULLY AND CORRECTLY SET FROM AND DESCRIBED IN THE DRAWINGS AND S SPECIFICATION

2. MANUFACTURER SPECIFIED WITHIN THE CONSTRUCTION DOCUMENTS ARE PROVIDED AS A MINIMUM PERFORMANCE CRITERIA, SUBSTITUTIONS WILL BE CONSIDERED IF COMPLAINT TO THE PERFORMANCE ESTABLISHED BY THE MANUFACTURER NOTED. BUILDING MATERIALS SUBSTANDARD TO THESE REQUIREMENTS WILL BE SUMMARILY REJECTED. ALL BUILDING COMPONENTS ARE TO BE HEAVY DUTY QUALITY AND BE FOR ABUSIVE RESISTANCE INSTALLATION. BUILDING COMPONENTS SPECIFIED HEREIN THAT DO NOT MEET THE HEAVY DUTY-ABUSIVE ENVIRONMENTAL CRITERIA MUST BE BROUGHT TO THE ATTENTION OF THE BUILDING REPRESENTATIVE AND WILL BE RE-SPECIFIED

3. BY THE SUBMISSION OF A BID, THE SUB CONTRACTOR REPRESENTS THAT HE HAS VISITED THE SITE AND HAS FAMILIARIZED HIMSELF/HERSELF WITH THE CONDITIONS UNDER WHICH THE WORK IS TO BE PERFORMED

4. DRAWINGS ARE NOT TO BE SCALED FOR DIMENSIONS AND/OR SIZE. VERIFY ALL DIMENSIONS BEFORE PROCEEDING AND OBTAIN MEASUREMENTS AT THE JOB FOR ALL WORK REQUIRED TO BE ACCURATELY FITTED TO THE BUILDING. THE CONTRACTOR SHALL BE RESPONSIBLE FOR THE ACCURACY OF ALL SUCH MEASUREMENTS AND FOR THE PRECISE FITTING OF THE WORK

5. IF CONFLICTS ARE DISCOVERED AT ANY TIME BETWEEN THE ENGINEERING AND ARCHITECTURAL DRAWINGS, THE COR SHALL BE CONTACTED AT ONCE TO RESOLVE THE PROBLEM. IF THE COR IS NOT CONTACTED, THE CONTRACTOR SHALL ACCEPT THE RESPONSIBILITY TO CORRECT ANY AND ALL SUCH WORK NOT IN A COORDINATE WITH THE ARCHITECTURAL DRAWINGS

6. CHANGES TO THE DRAWINGS (ADDITIONS, DELETIONS OR ALTERATIONS) THAT MIGHT CONSTITUTE A CHANGE ORDER MUST BE SUBMITTED IN WRITING TO THE COR FOR APPROVAL, OTHERWISE CONTRACTOR WOULD UNDERTAKE SUCH WORK AT HIS OWN RISK AND WORK MIGHT HAVE TO BE REVERSED AT CONTRACTOR'S OWN COST

7. BEST PRACTICES, METHODS AND MATERIALS, MUST BE FOLLOWED AT ALL TIMES. ANY ITEM NOT SPECIFICALLY LISTED OR SHOWN ON THE CONTRACT DOCUMENTS BUT NECESSARY FOR THE COMPLETION OF THE PROJECT, SHALL BE CONSIDERED PART OF THE CONTRACT'S SCOPE OF WORK

8. THE G. C. & ALL SUB-CONTRACTOR SHALL SUBMIT TO COR SUBMITTALS AND SHOP DRAWINGS FOR REVIEW PRIOR TO START OF CONSTRUCTION.

9. UPON COMPLETION OF THE INSTALLATION, REMOVE ALL DEBRIS FROM THE BUILDING CREATED BY THE WORK PROVIDED UNDER THIS CONTRACT AND LEAVE ALL AREAS CLEAN. REMOVE ANY SOILED SPOTS FROM THE FACE OF THE CARPET OR OTHER FINISH SURFACES USING PROCESSES RECOMMENDED BY THE MANUFACTURER AND IN A MANNER ACCEPTABLE TO THE GOVERNMENT. REPLACE ANY AREAS OF CARPET OR FINISH SURFACES WHERE CLEANING HAS FAIL TO RESTORE THE APPEARANCE AND QUALITY SATISFACTORILY, AS DETERMINED BY THE GOVERNMENT.

10. WHERE THE G. C. IS INSTRUCTED TO ALIGN A PARTITION WITH TWO OR MORE COLUMNS AND THE COLUMNS ARE DISCOVE- RED TO BE OF UNEQUAL SIZE, THE LARGER OF THE COLUMNS SHALL DETERMINE THE LOCATION OF THE PARTITION. THIS WILL ALSO APPLY TO COLUMNS AND CORE WALLS.

11. AREA OF WORK MUST BE ISOLATED FROM THE REST OF THE FLOOR. PROTECT ALL SURFACES, EQUIPMENT& FURNITURE PRIOR TO START OF WORK

12. PROTECT ALL GOVERNMENT PROPERTY ENCOUNTERED AT THE JOB SITE AGAINST DAMAGE. ALL DAMAGE CAUSED BY THE GC OR HIS SUB-CONTRACTORS DURING CONSTRUCTION SHALL BE REPAIRED OR REPLACED TO MATCH EXISTING AND TO THE SATISFACTION AND APPROVAL OF THE COR. PRE-EXISTING DAMAGE MUST BE REVIEWED AND ACKNOWLEDGED, IN WRITING BY THE GOVERNMENT AND ARCHITECT PRIOR TO COMMENCEMENT OF WORK. DAMAGE NOT DOCUMENTED PRIOR TO CONSTRUCTION START SHALL BE REPAIRED TO LIKE NEW CONDITION WITHOUT ADDITIONAL CHARGE TO THE GOVERNMENT.

13. WHEN IN PLACE, REMOVE ALL HVAC COVERS AS NEEDED. SEAL EXPOSED DUCTS AND VENTS TO PREVENT INTRODUCING DUST INTO THE SYSTEM. (REMOVED COVERS MUST BE REINSTALLED AT END OF THE JOB)

14. THE CONTRACTOR SHALL CLEAN UP ALL ACTIVE WORK AREAS AFTER EACH DAY'S WORK. THE CONTRACTOR IS RESPONSIBLE FOR THE REMOVAL AND PROPER DISPOSAL OF ALL WORK RELATED TRASH AND DEBRIS.

15. THE G. C. SHALL ENSURE THAT ALL PAINT HAS BEEN REMOVED FROM ALL NON-SCHEDULE PAINTED SURFACES PRIOR TO DELIVERY OF THE SPACE.

16. THE G. C. SHALL COORDINATE ALL WORK WITH FIELD CONDITIONS AND ALL OTHER TRADES INVOLVED AS REQUIRED

17. IF THERE IS A QUESTION AS TO THE ACCEPTABLE LEVEL OF QUALITY FOR THE INSTALLATION OF ANY MATERIALS, THE COR DECISION WILL BE FINAL

18. NEW DOOR HARDWARE, INCLUDING HINGES AND LOCK SETS, ARE TO BE MOUNTED AT ABA HEIGHTS U. N. O.

19. ALL CEILING REGISTERS, GRILLES, VENTS AND DIFFUSERS SHALL BE FACTORY FINISHED. IF PAINTING IS REQUIRED, PROVIDE ENAMEL FINISH

20. ALL J-BENDS AND OTHER GYPSUM METAL TRIM SHALL BE SPACKLE-BLENDED INTO THE ADJACENT SURFACE.

21. WHERE TWO OR MORE WALL SWITCHES OR DIMMERS OCCUR IN THE SAME LOCATION, THEY ARE TO RECEIVE A COMMON GANG PLATE WHOSE FINISH IS TO MATCH THE BUILDING STANDARD SWITCH PLATE.

22. ALL PAINTED WALLS SHALL BE HAVE A LEVEL 4 FINISH: WITH ONE ROLLER-APPLIED (1) PRIMER COAT AND (2) ROLLER- APPLIED FINISH COATS.

23. PROVIDE THRESHOLDS AT ALL DOORS & TRANSITION STRIPS WHERE CARPET MEETS A DIFFERENT TYPE OF FLOORING UNLESS NOTED OTHERWISE

24. REVIEW THE SCHEDULES, SPECIFICATIONS AND CUT SHEETS FOR ACCESSORIES, FIXTURES, ETC. THAT ACCOMPANY THE DRAWING SET PRIOR TO PLACING ORDERS. IF CONFLICTS ARE FOUND, INFORM THE COR OF SUCH FINDINGS AND TAKE NO ACTION UNTIL RESOLVED. IN THOSE CASES, IF AN ORDER FOR AN UNRESOLVED ITEM IS PLACED WITHOUT APPROVAL OF COR, THE CONTRACTOR ASSUMES ALL RESPONSIBILITY IF THE ITEM IS NOT ACCEPTED BY THE GOVERNMENT

25. ALL WORK MUST BE COMPLETED CONFORMING TO CODES AND REGULATIONS WHICH INCLUDE, BUT ARE NOT LIMITED TO THE FOLLOWING (LATEST EDITIONS AS PER 9/2025) : International Building Code (IBC), International Existing Building Code (IEBC), DT-DRM REV. 2.1, Architectural Barriers Act (ABA) Accessibility Standards, NFPA 1: Fire Code, NFPA 10: Standard for Portable Fire Extinguishers, NFPA 13: Standard for the Installation of Sprinkler Systems,NFPA 70 (NEC): National Electrical Code, NFPA 72: National Fire Alarm and Signaling Code, NFPA 80: Standard for Fire Doors and Other Opening Protectives, NFPA 90A: Standard for the Installation of Air-Conditioning and Ventilating SystemsNFPA 101: Life Safety Code, NFPA 241: Standard for Safeguarding Construction, Alteration, and Demolition Operations. WHERE A CONFLICT OCCURS IN OR BETWEEN THE AFOREMENTIONED CODES AND REGULATIONS, THE STRICTER SHALL APPLY UNLESS OTHERWISE INDICATED OR AGREED UPON.

26. THE INVESTIGATION FOR AND REMEDIATION OF ANY HAZARDOUS MATERIALS WITHIN THE PROJECT AREA ARE NOT A PART OF THESE CONSTRUCTION DOCUMENTS. ANY SUCH MATERIAL THAT IS ENCOUNTERED AND IMPACTS THE PROGRESS OF THE WORK INDICATED BY THESE DRAWINGS AND SPECIFICATIONS MUST BE DEALT WITH BY THE CONTRACTOR WITH THE OWNER UNDER SEPARATE CONTRACT. THIS REQUIREMENT SHALL IN NO WAY BE CONSTRUED AS REPRESENTATION BY THE ARCHITECT AS TO HOW TO IDENTIFY AND REMEDIATE SAID MATERIAL.

27. CONTACT DFM TO PERFORM INSPECTIONS PRIOR TO WALL AND CEILING CLOSE-INS, AS WELL AS FINAL OCCUPANCY INSPECTION.

28. PROVIDE DEMOLITION TO THE MINIMUM EXTENT REQUIRED FOR THE INSTALLATION OF FIRE ALARM, SECURITY SYSTEMS AND TELECOMMUNICATIONS WORK. COORDINATE WITH EACH TRADES AND CONSULTANTS AND VERIFY THE EXTENT OF THE WORK REQUIRED. EXISTING FINISHES AND EQUIPMENT IN THE WORK AREAS ARE TO REMAIN AND SHOULD BE DISTURBED ONLY TO THE MINIMUM EXTENT TO PERFORM THE WORK.

29. COORDINATE ALL WORK REQUIRED ON FLOORS AND IN THE CEILINGS ABOVE AND BELOW THE PROJECT AREA W/ THE COR AND W/ THE USERS IN THE AFFECTED AREAS. REMOVE EXISTING CONSTRUCTION TO THE MINIMUM EXTENT REQUIRED FOR THE PERFORMANCE OF THE WORK AND REPLACE WITH LIKE-KIND AT THE CONCLUSION OF THE WORK. VERIFY THE TYPES AND AMOUNT OF EXISTING CONSTRUCTION TO BE AFFECTED. PROTECT ALL USER FURNITURE, FIXTURES AND EQUIPMENT WHILE PERFORMING THE WORK AND REPLACE ANY DAMAGED ARTICLES IN-KIND. CLEAN ALL AFFECTED USER AREAS AFTER THE COMPLETION OF THE WORK AND RETURN ALL FF&E ITEMS TO THEIR ORIGINAL LOCATIONS.

30. POWDER-ACTIVATED TOOLS REQUIRE WRITTEN APPROVAL BY THE PROJECT OFFICER AND PRESENTED UPON REQUEST WHEN IN USE. USE OF THESE TOOLS ALSO REQUIRES PROOF OF LICENSING AND TRAINING WHICH MUST ALSO BE PROVIDED UPON REQUEST. CONTRACTOR SHALL PROVIDE A LOG OF "WHO, WHAT, WHERE AND WHEN" FOR ANY POWER OR POWDER ACTIVATED TOOLS THAT WILL BE USED. EXAMPLES OF SUCH TOOLS INCLUDE: AIR OR ELECTRICALLY POWERED TOOLS SUCH AS NAIL-GUNS, RAM TOOLS, OR ANY OTHER TOOL THAT CAN PROPEL A PROJECTILE AND MIGHT BE WEAPONIZED. THE LOG SHALL BE CONTINUALLY UPDATED DURING CONSTRUCTION, MADE AVAILABLE UPON REQUEST, AND PROVIDED TO THE PROJECT OFFICER AT WORK COMPLETION. (NOTE: GAS TOOLS ARE NOT ALLOWED AT TREASURY)

31. ALL MATERIALS MUST BE U.S.A. MADE

HISTORIC PRESERVATION

1. ANY PROJECT AFFECTING HISTORIC PROPERTIES MUST FOLLOW SECRETARY OF THE INTERIOR'S STANDARDS FOR THE TREATMENT OF HISTORIC PROPERTIES
2. ALL DESIGNS MUST FOLLOW APPLICABLE NIH TECHNICAL GUIDELINES AND REQUIREMENTS FOR HISTORICAL BUILDINGS
3. PROTECT ALL HISTORIC FABRIC DURING DEMOLITION AND CONSTRUCTION. DO NOT REMOVE HISTORIC FABRIC UNLESS NOTED ON DOCUMENTS. ANY HISTORIC FABRIC REMOVED MUST BE RETURNED TO COR. DO NOT DISPOSE.

ABBREVIATIONS

A	ABA	ARCHITECT. BARRIERS ACT
	AC	ACOUSTICAL TILE
	ACT	ACOUSTIC CEILING TILE
	AD	AREA DRAIN
	ADA	AMER. W/ DISABILITIES ACT
	ADJ	ADJUSTABLE
	AFF	ABOVE FINISH FLOOR
	ALT	ALTERNATE
	ALUM	ALUMINUM
	A&G	ALUMINUM AND GLASS
	ANCH	ANCHOR
	APPROX	APPROXIMATE
	AOR	ARCHITECT OF RECORD
	ARCH	ARCHITECTURAL
	ATT	ATTENUATION
	AU	ASH URN
	A/V	AUDIO VISUAL
B	B & B	BALLED AND BAGGED
	BD	BOARD
	BET	BETWEEN
	BF	BARRIER FREE
	BIT	BITUMINOUS
	BLDG	BUILDING
	BLKG	BLOCKING
	BM	BEAM
	BMK	BENCHMARK
	BNG	BEARING
	BOD	BOTTOM OF DECK
	BTM	BOTTOM
	BR	BACKER ROD
	BRG	BRIDGING
	BUR	BUILT UP ROOFING
	BW	BOTH WAYS
C	C	COURSE
	CAB	CABINET
	CEM	CEMENT OR CEMENTITIOUS
	CER	CERAMIC
	CG	CORNER GUARD
	CIP	CAST IN PLACE
	CJ	CONTROL JOINT
	CL	CENTER LINE
	CLG	CEILING
	CLM	COLUMN
	cm	CENTIMETER
	CMU	CNCRETE MASONRY UNIT
	COMP	COMPRESSION
	CONC	CONCRETE
	CONT	CONTINUOUS
	CORR	CORRIDOR
	CPT	CARPET
	CSK	COUNTERSINK
	CT	CERAMIC TILE
	CTTA	CERTIFIED TEMPEST TECHNICAL AUTHORITY
D	D	DEPTH OR DEEP
	DBL	DOUBLE
	DBC	DESIGN BUILD CONTRACTOR
	DEG	DEGREE
	DEMO	DEMOLITION
	DET	DETAIL
	DF	DRINKING FOUNTAIN
	DIA	DIAMETER
	DIM	DIMENSION
	DN	DOWN
	DP	DAMP PROOFING
	DR	DOOR
	DS	DOWN SPOUT
	DW	DISH WASHER
	DWG	DRAWING
	DWR	DRAWER
E	E	EAST
	EA	EACH
	EHB	ELECTRIC HAND BLOWER
	EHD	ELECTRIC HAND DRYER
	EIFS	EXISTING INSULATING FINISH
	EJ	EXPANSION JOINT
	EL	ELEVATION (GRADE)
	ELEC	ELECTRICAL
	EQ	EQUAL
	EQUIP	EQUIPMENT
	ETS	EXPOSED TO STRUCTURE
	EW	EACH WAY
	EWC	ELECTRIC WATER COOLER
	EXT	EXTERIOR
	EXTG	EXISTING
	EXTD	EXTRUDED
F	FCU	FAN COIL UNIT
	FD	FLOOR DRAIN
	FE	FIRE EXTINGUISHER
	FEC	FIRE EXTINGUISHER CABINET
	FEX	FIRE EXTINGUISHER (NO CAB)
	FFA	FURNITURE, FIXTURES & ACCESSORIES
	FFE	FURNITURE, FIXTURES & EQUIPMENT
	FF	FINISHED FLOOR
	FHC	FIRE HOSE CABINET
	F&I	FURNISH AND INSTALL
	FIN	FINISH
	FLASH	FLASHING
	FLR	FLOOR
	FLUOR	FLUORESCENT
	FOF	FACE OF FINISH
	FP	FIREPROOFING
	FPHB	FREEZE-PROOF HOSE BIB
	FR	FIRE RETARDANT/ RESISTANT
	FRP	FIBERGLASS REINFORCED POLYMER
	FT	FOOT/FEET
	FTG	FOOTING
	FURN	FURNITURE
	FURR	FURRING
	FV	FIELD VERIFY
	FWC	FABRIC WALL COVERING
G	GA	GAUGE
	GALV	GALVANIZED
	GB	GRAB BAR
	GC	GENERAL CONTRACTOR
	GFI	GROUND FAULT INTERRUPT
	GFRC	GOVERNMENT FURNISHED/ CONTRACTOR INSTALLED
	GFRG	GLASS FIBER REINFORCED CONCRETE
	GL	GLASS
	GND	GROUND
	GR	GRADE
	GWB	GYPSUM WALL BOARD
	GYP	GYPSUM
	GYP BD	GYPSUM BOARD
H	H	HIGH
	HB	HOSE BIB
	HBD	HARDBOARD
	HC	HOLLOW CORE
	HCTLT	HANDICAPPED ACCESSIBLE TOILET
	HD	HOLD
	HDR	HEADER
	HDW	HARDWARE
	HDWD	HARDWOOD
I	IBC	INTERNATIONAL BUILDING CODE
	IEBC	INTERNATIONAL EXISTING BUILDING CODE
	IECC	INTERNTL. ENERGY CONSERVATION CODE
	IFC	INTERNATIONAL FIRE CODE
	ID	INSIDE DIAMETER
	IMC	INTERNATIONAL MECHANICAL CODE
	IN	INCH
	INCAN	INCANDESCENT
	INCL	INCLUDING
	INSUL	INSULATION
	INT	INTERIOR
	IPC	INTERNATIONAL PLUMBING CODE
J	JB	JUNCTION BOX
	JT	JOINT
K	KD	KNOCK DOWN
	KO	KNOCK OUT
L	L	LONG
	LAM	LAMINATED
	LAV	LAVATORY
	LB	LAG BOLT OR LINEAR BOLT
	LBP	LEAD-BASED PAINT
	LF	LINEAR FEET
	LLH	LONG LEG HORIZONTAL
	LLV	LONG LEG VERTICAL
	LP	LOW POINT
	LT	LIGHT OR LIGHTING
	LW	LIGHT WEIGHT
M	M	METER
	MACH	MACHINE
	MAS	MASONRY
	MAT	MATERIAL
	MAX	MAXIMUM
	MBH	MOP & BROOM HOLDER
	MBR	MODIFIED BITUMINOUS ROOF
	MC	MEDICINE CABINET
	MECH	MECHANICAL
	MEMB	MEMBRANE
	MEP	MECHANICAL, ELECTRICAL & PLUMBING
	MFR	MANUFACTURER
	MH	MANHOLE
	MIN	MINIMUM
	MIR-F	MIRROR-FRAMED EDGE
	MIR-G	MIRROR-GLASS EDGE
	MISC	MISCELLANEOUS
	MLD	MOULDING
	MM	MILIMITER
	MNTD	MOUNTED
	MO	MASONRY OPENING
	MS	MOP SINK
	MSD	MATERIAL SAFETY DATA
	MTD	MOUNTED
	MTG	MOUNTING
	MTL	METAL
N	N	NORTH
	N/A	NOT APPLICABLE
	NCOM	NON-COMBUSTIBLE
	NEC	NATIONAL ELECTRICAL CODE
	NIC	NOT IN CONTRACT
	NFPA	NATIONAL FIRE PROTECTION ASSOCIATION
	NOM	NOMINAL
	NPS	NOMINAL PIPE SIZE
	NTS	NOT TO SCALE
O	OC	ON CENTER
	OD	OUTSIDE DIAMETER
	OFCI	OWNER FURNISHED/ CONTRACTOR INSTALLED
	OFD	OVERFLOW DRAIN
	OFOI	OWNER FURNISHED/ OWNER INSTALLED
	OH	OPPOSITE HAND OR OVERHEAD
	OPG	OPENING
	OPP	OPPOSITE
	OPT	OPTION OR OPTIONAL
	OSSI	OFFICE OF SECURITY & STRATEGIC INFORMATION
	OZ	OUNCES
P	PA	PUBLIC ADDRESS SYSTEM
	PAF	PRESSURE AIR FASTENER
	PC	PRECAST
	PCEM	PORTLAND CEMENT
	PCF	POUNDS PER CUBIC FOOT
	PL	PLATE
	PLAM	PLASTIC LAMINATE
	PLBG	PLUMBING
	PLF	POUNDS PER LINEAR FOOT
	PLTR	PLASTER
	PLY	PLYWOOD
	PMR	PROTECTED MEMBRANE ROOFING
	PNL	PANEL
	PNT	PAINT OR PAINTED
	POE	POINT OF ENTRY
	POL	POLISHED
	PR	PAIR
	PSF	POUNDS PER SQUARE FOOT
	PSI	POUNDS PER SQUARE INCH
	PT	POINT
	PTD	PAPER TOWEL DISPENSER
	PTN	PARTITION
	PVC	POLYVINYL CHLORIDE
	PVMT	PAVEMENT
Q	QT	QUARRY TILE
	QTR	QUARTER
	QTY	QUANTITY
R	R	RADIUS OR RISER
	RA	RETURN AIR
	RCP	REFLECTED CEILING PLAN
	RD	ROOF DRAIN
	RE	REFER
	RECEP	RECEPTACLE
	REFL	REFLECTED
	REG	REGISTER
	REINF	REINFORCEMENT
	REQD	REQUIRED
	RES	RESILIENT
	REV	REVERSE
	RFI	REQUEST FOR INFORMATION
	RH	ROBE HOOK
	RM	ROOM
	RO	ROUGH OPENING
	ROW	RIGHT OF WAY
	RSF	RESILIENT SHEET FLOORING
S	S	SOUTH
	SA	SUPPLY AIR
	SAN	SANITARY
	SB	SPLASH BLOCK
	SC	SOLID CORE
	SCC	SECURITY COMMAND CENTER
	SCHED	SCHEDULE
	SCIF	SENSITIVE COMPARTMENTED INFORMATION FACILITY
	SCWD	SOLID CORE WOOD DOOR
	SD	SOAP DISPENSER
	SECT	SECTION
	SF	SQUARE FEET
	SFP	SPRAYED FIREPROOFING
	SH	SPRINKLER HEAD
	SHT	SHEET
	SHTG	SHEATHING
	SIM	SIMILAR
	SKLT	SKYLIGHT
	SP	STANDPIPE
	SPEC	SPECIFIED OR SPECIFICATION
	SQ	SQUARE
	SR	SHOWER ROD
	SR/SC	SHOWER ROD / SHOWER CURTAIN
	SS	STAINLESS STEEL
	ST	SOAP TRAY
	STC	SOUND TRANSMISSION CLASS
	STD	STANDARD
	STL	STEEL
	STOR	STORAGE
	STRL	STRUCTURAL
	STRU	STRUCTURE
	SUSP	SUSPENDED
	SYM	SYMBOL
	SYN	SYNTHETIC
	SYS	SYSTEM
T	T	TREAD OR TOP
	TB	TOWEL BAR
	TBL	TOP OF BRICK LEDGE
	T&B	TOP & BOTTOM
	TC	TOP OF CURB
	TD	TRENCH DRAIN
	TEL	TELEPHONE
	TERR	TERRAZZO
	T&G	TONGUE AND GROOVE
	THK	THICK
	THRU	THROUGH
	TLT	TOILET
	TOC	TOP OF CONCRETE
	TOD	TOP OF DECK
	TOF	TOP OF FOOTING
	TOI	TOP OF INSULATION
	TOJ	TOP OF JOIST
	TOP	TOP OF PARAPET
	TOS	TOP OF STEEL
	TOW	TOP OF WALL
	TPH	TOILET PAPER HOLDER
	TR	TELEPHONE RECEPTACLE
	TTB	TELEPHONE TERMINAL BOARD
	TV	TELEVISION
	TYP	TYPICAL
U	UCL	UNDER CABINET LIGHT
	ULAY	UNDERLAYMENT
	UNFIN	UNFINISHED
	UNO	UNLESS NOTED OTHERWISE
	UON	UNLESS OTHERWISE NOTED
	UR	URINAL
V	VB	VAPOR BARRIER
	VCT	VINYL COMPOSITION TILE
	VERT	VERTICAL
	VIF	VERIFY IN FIELD
	VP	VENT PIPE
	VS	VENT SHAFT
	VT	VINYL TILE
	VWC	VINYL WALL COVERING
W	W	WEST OR WIDE OR WIDTH
	W/	WITH
	WB	WIND BRACE
	WC	WATER COSET
	WCOT	WAINSCOT
	WD	WOOD
	WDO	WINDOW
	WH	WEEP HOLE
	W/O	WITHOUT
	WO	WINDOW OPENING
	WP	WATER PROOFING
	WR	WASTE RECEPTACLE
	W/R	WATER RESISTANT
	WS	WEATHERSRIPPING
	WT	WEIGHT
	WWF	WELDED WIRE FABRIC
Y	YD	YARD
	&	AND
	@	AT
	=	EQUAL
	±	PLUS / MINUS
	#	POUNDS OR NUMBER
	x	TIMES
	°	DEGREES
	∠	ANGLE
	Ø	DIAMETER
	℄	CENTER LINE
	'	FEET
	"	INCHES

SYMBOLS AND MATERIALS LEGEND

ALIGN	ALIGN SURFACES	X / X	ELEVATION NUMBER / SHEET NUMBER		EXISTING DOOR ASSEMBLY TO BE REMOVED		WOOD BLOCKING CONTINUOUS		EXISTING TATE STEEL 24"x 24" FLOOR PANEL SYSTEM TO REMAIN UNALTERED
XX	GENERAL / KEY NOTE			XXX	EXISTING DOOR ASSEMBLY WITHIN THE AREA OF WORK TO REMAIN		WOOD BLOCKING NOT CONTINUOUS		EXISTING STEEL 24"x 24" FLOOR PANEL TO BE REMOVED AND MODIFIED
X	DEMILITION NOTE	X / XX	DETAIL / SECTION NUMBER / SHEET NUMBER		EXISTING DOOR ASSEMBLY OUTSIDE THE AREA OF WORK TO REMAIN		PLYWOOD		MODIFIED EXISTING STEEL 24"x 24" FLOOR PANEL
XXX / XXX	ROOM NAME / ROOM NUMBER	X	FURNITURE / EQUIPMENT TAG	XXX	DOOR NUMBER / NEW DOOR ASSEMBLY		FINISH WOOD	(E)	EXISTING POWER/ DATA FLOOR BOX W/ COVER
XX	WALL / PARTITION TYPE		FLOOR FINISH TRANSITION		STEEL STUD		CARPET		NEW POWER/ DATA FLOOR BOX W/ COVER
XX	STRUCTURAL GRID COMPONENT		EXISTING WALL TO REMAIN		STEEL RUNNER / TRACK		EXISTING PENDANT LIGHT FIXTURE TO REMAIN AS IS. PROTECT DURING CONSTRUCTION	(E)	POWER/ DATA FLOOR BOX W/ COVER AND FLOOR PANEL TO BE RELOCATED
℄	CENTER LINE		NEW STC-50 WALL		BATT INSULATION		EXISTING SPRINKLER HEAD TO REMAIN UNALTERED	(E)	RELOCATED POWER/ DATA FLOOR BOX W/ COVER AND FLOOR PANEL
	FINISH ELEVATION		NEW WALL AS PER WALL TYPE		ALUMINUM		EXISTING HISTORIC VAULTED, PLASTER CEILING TO REMAIN UNALTERED. PROTECT DURING CONSTRUCTION		
X	REVISION NUMBER / REVISION CLOUD		WALL TO BE REMOVED		CONCRETE		EXISTING FCU AND ASSOCIATED PIPING CABINET TO REMAIN AS IS. PROTECT DURING CONSTRUCTION PRIOR TO REFINISHING		
			NOT IN THE SCOPE OF WORK		GYPSUM OR SAND				

MERIDIEN GROUP

MERIDIEN GROUP, LLC
208 SOUTH KING ST. SUITE 303
LEESBURG, VA 20175
(703) 777-8285
www.meridiengroupllc.com

DCA CITADEL
ARCHITECTURE | HISTORIC PRESERVATION | PLANNING | DESIGN

CERTIFICATIONS

KEY PLAN

REVISION NOTES

MARK	DATE	DESCRIPTION

GRAPHIC SCALE

CONTRACTORS	A/E CON. NO.	
	A/E TASK NO.	
	CONS. CONTR	
	CONS. WORK	
	PRIME A/E	MERIDIEN GROUP / CITADEL DCA
	SUB A/E	
BUILDING	NAME	
	STREET	
	CITY/ST./ZIP	WASHINGTON, DC
	BUILDING NO.	DC-
	OTHER	
	BUILDING NOs.	
	FACILITY CODE	
PROJECT	PROJECT TITLE	FEDERAL OFFICE BUILDING MT 2453 OFFICE RENOVATION
	PROJECT DESCRIPTION	RENOVATION OF SECOND FLOOR SUITE
	PROJECT NO.	MT2453_26_004
	GSA PM	BARBARA CHOATE
	SUBMISSION	100% SUBMISSION FOR REVIEW
	SUB. DATE	28 APRIL 2026
DRAWING	DRAWING TITLE	NOTES, SYMBOLS AND ABBREVIATIONS
	FILE NAME	
	FLOOR NO.	2ND FLOOR
	DRAWN BY	AGF DATE DRAFTED: 04/14/2026
	CHECKED BY	LSP SHEET SIZE: 24 x 36
	DRAWING NO.	G- 002
		DISCIPLINE SHEET TYPE SEQUENCE
		SHEET 02 OF 21

GENERAL NOTES

1. CONTRACTOR TO VERIFY EXISTING CONDITIONS BEFORE STARTING. NO FORENSIC DEMOLITION WAS CONDUCTED AT THE TIME OF THE SURVEY. DISCREPANCIES MIGHT BE ENCOUNTERED BETWEEN ACTUAL CONDITIONS AND DRAWINGS. INFORM COR PRIOR TO PROCEEDING w/ WORK
2. IN CASE OF CONFLICTS BETWEEN PLANS, KEY NOTES, SECTIONS, DETAILS AND SPECIFICATIONS, THE MOST STRINGENT REQUIREMENT APPLIES
3. ALL DIMENSIONS ARE GIVEN FROM FINISH WALL OR PARTITION TO FINISH WALL OR PARTITION
4. ALL WORK PROVIDED UNDER THIS CONTRACT SHALL BE NEW UNLESS SPECIFICALLY MARKED "EXISTING," "EXTG", OR "(E)"
5. BEST PRACTICES, METHODS AND MATERIALS, MUST BE FOLLOWED AT ALL TIMES. ANY ITEM NOT SPECIFICALLY LISTED OR SHOWN ON THE CONTRACT DOCUMENTS BUT NECESSARY FOR THE COMPLETION OF THE PROJECT, SHALL BE CONSIDERED PART OF THE CONTRACT'S SCOPE OF WORK
6. THE CONTRACTOR SHALL CLEAN UP ALL ACTIVE WORK AREAS AFTER EACH DAY'S WORK. THE CONTRACTOR IS RESPONSIBLE FOR THE REMOVAL AND PROPER DISPOSAL OF ALL WORK RELATED TRASH AND DEBRIS
7. PROTECT ALL GOVERNMENT PROPERTY ENCOUNTERED AT THE JOB SITE AGAINST DAMAGE. ALL DAMAGES CAUSED BY THE CONTRACTOR SHALL BE REPAIRED OR REPLACED TO MATCH EXISTING AND TO THE SATISFACTION AND APPROVAL OF THE COR
8. AREA OF WORK MUST BE ISOLATED FROM THE REST OF ADJACENT AREAS. PROTECT ALL SURFACES, EQUIPMENT& FURNITURE PRIOR TO START OF WORK.
9. REMOVE ALL HVAC COVERS AS NEEDED. SEAL EXPOSED DUCTS AND VENTS TO PREVENT INTRODUCING DUST INTO THE SYSTEM. (REMOVED COVERS MUST BE REINSTALLED AT END OF THE JOB)
10. PROTECT ALL HISTORIC FABRIC DURING DEMOLITION AND CONSTRUCTION.
11. DO NOT REMOVE HISTORIC FABRIC UNLESS SPECIFICALLY NOTED ON DOCUMENTS. ANY HISTORIC FABRIC REMOVED MUST BE RETURNED TO COR. DO NOT DISPOSE.

DEMOLITION & PROTECTION NOTES

1. EXISTING PARTITION W/ BASEBOARD AND CLERESTORY WINDOWS TO BE DEMOLISHED AND DISPOSED.
2. EXISTING 2-PANEL DOOR W/ FLAT CASING TO BE REMOVED. DISPOSE OF CASING AND RETURN HARDWARE TO COR.

   NOTE: IF DOOR ASSEMBLY (DOOR LEAF + FRAME) IS IN GOOD CONDITION AND IT IS APPROVED BY TREASURY'S COR, KEEP THE ASSEMBLY ON SITE DOOR TO BE REUSED AT NEW OFFICE LOCATION.
3. EXISTING MILLWORK AND CROWN MOLDING AFFECTED BY THE REMOVAL OF THE PARTITION TO BE RESTORED
4. REMOVE FLOOR SYSTEM PANELS AS DEPICTED TO ALLOW FOR THE DEMOLITION OF THE EXISTING WALL AND FOR THE CONSTRUCTION OF THE NEW WALLS. KEEP THE PANELS ON SITE AND REINSTALL AT THE COMPLETION OF THE WALL CONSTRUCTION
5. REMOVE AND DISPOSE OF CARPET. PREPARE FLOOR PANELS TO RECEIVE NEW CARPET BY REMOVING GLUE AND DEBRIS
6. REMOVE FLOOR SYSTEM PANELS WITH POWER AND DATA BOXES AS DEPICTED. KEEP THE PANELS ON SITE AND REINSTALL AT NEW LOCATION
7. REMOVE OR PROTECT WINDOW BLINDS FOR THE ENTIRE DURATION OF THE WORK. IF REMOVED THEY NEED TO BE STORED ON SITE AND REINSTALLED AT THE CONCLUSION OF THE JOB

KEY NOTES

1. ERECT ZIP WALLS OR EQUIVALENT FROM TATE FLOOR SYSTEM TO HISTORIC CEILING TO ENCLOSE PROJECT AREA INCLUDING CORRIDOR.
2. ORIGINAL HISTORIC CROWN MOLDING AND CEILING RIB MOLDINGS TO REMAIN. THE NEW PARTITIONS SHOULD BE BUILD AS PER WALL SECTIONS TO AVOID DAMAGING THE HISTORIC ELEMENTS.
3. EXISTING DOOR ASSEMBLY TO REMAIN. PROTECT DURING CONSTRUCTION
4. EXISTING FCU TO REMAIN. COVER DURING CONSTRUCTION TO PREVENT DUST FROM ENTERING THE VENTS
5. EXISTING MILLWORK TO REMAIN UNALTERED. PROTECT DURING CONSTRUCTION FRAME NEW PARTITION AROUND MILLWORK AS INDICATED IN SECTIONS & FRAMING PLAN. DO NOT ALTER MILLWORK.
6. EXISTING LIGHT FIXTURES AND FIRE SUPPRESSION SYSTEM TO REMAIN UNALTERED. PROTECT DURING CONSTRUCTION
7. EXISTING ORIGINAL WALL & BASEBOARD TO REMAIN UNALTERED. PREPARE TO BE REFINISHED. PROTECT DURING CONSTRUCTION
8. EXISTING FLOOR BOXES TO REMAIN UNALTERED. PROTECT DURING CONSTRUCTION
9. EXISTING NON-ORIGINAL PARTITION W/ BASEBOARD AND CLERESTORY WINDOWS TO REMAIN. PREPARE TO BE REFINISHED
10. EXISTING NON-ORIGINAL PARTITION W/ BASEBOARD TO REMAIN. ALTER BASEBOARD AS NEEDED TO INSTALL NEW PARTITION
11. EXISTING PANELED PARTITION TO REMAIN. PROTECT DURING CONSTRUCTION

SYMBOLS LEGEND

- EXISTING WALLS TO REMAIN
- PORTION OF WALL TO BE REMOVED
- FOOTPRINT OF NEW WALL
- EXISTING DOORS TO BE REMOVED
- EXISTING IRVINE-TATE CONCORE / ALL STEEL 24"x 24" FLOOR PANEL SYSTEM TO REMAIN
- EXISTING IRVINE-TATE CONCORE / ALL STEEL 24"x 24" FLOOR PANEL TO BE REMOVED TO ALLOW FOR WALL CONSTRUCTION. PANELS TO REMAIN ON SITE UNTIL CONSTRUCTION IS COMPLETED. REINSTALL AFTER COMPLETION
- (E) EXISTING FLOOR BOX TO REMAIN UNALTERED. PROTECT DURING CONSTRUCTION
- (E) EXISTING FLOOR BOX AND FLOOR PANEL TO BE RELOCATED
- EXISTING FCU AND ASSOCIATED PIPING CABINET TO REMAIN AS IS. PROTECT DURING CONSTRUCTION PRIOR TO REFINISHING
- NOT IN THE SCOPE OF WORK

DUE TO THE PRESENCE OF CARPET, THE FLOOR PANEL SYSTEM HAS NOT BEEN SURVEYED. THESE DRAWINGS REPRESENT ONLY AN APPROXIMATION OF THE EXISTING CONDITIONS, THUS ADJUSTMENTS WILL BE NECESSARY. THE ARCHITECT WILL SURVEY THE FLOOR ONCE CARPET HAS BEEN REMOVE

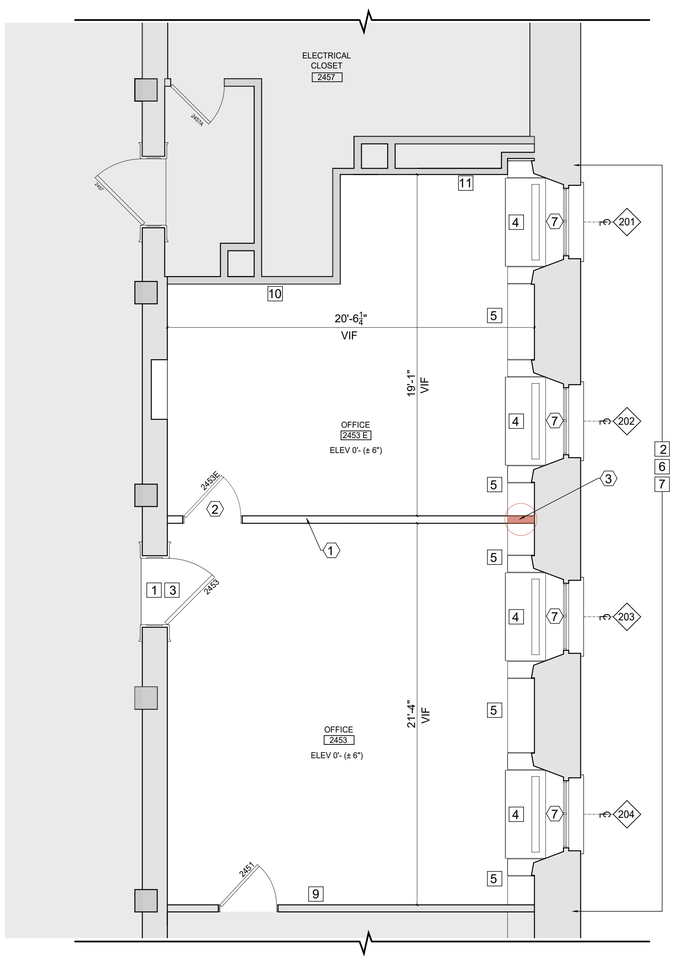

A-1 EXISTING & DEMOLITIOM FLOOR PLAN
1/4" = 1'-0"

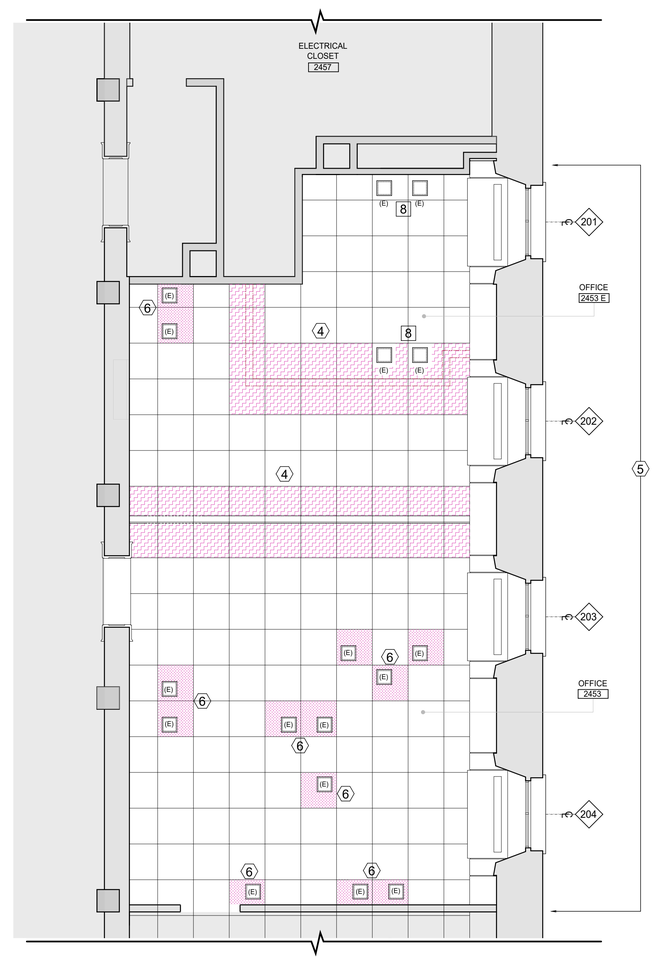

A-3 EXISTING AND DEMOLITION FLOOR PANEL SYSTEM
1/4" = 1'-0"

MERIDIEN GROUP

MERIDIEN GROUP, LLC
208 SOUTH KING ST. SUITE 303
LEESBURG, VA 20175
(703) 777-8285
www.meridiengroupllc.com

CITADEL
ARCHITECTURE | HISTORIC PRESERVATION | PLANNING | DESIGN

CERTIFICATIONS

KEY PLAN

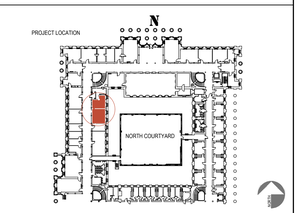

REVISION NOTES

MARK	DATE	DESCRIPTION

GRAPHIC SCALE

1/4" =1'-0"

30" 18" 6" 36" 24" 12" 0 1' 2' 3' 4' 5' 6' 7' 8'

CAUTION: IF THIS DRAWING IS A REDUCTION THIS GRAPHIC SCALE MUST BE USED

CAUTION: IF THIS DRAWING IS A REDUCTION THIS GRAPHIC SCALE MUST BE USED

CONTRACTORS	A/E CON. NO.	
	A/E TASK NO.	
	CONS. CONTR	
	CONS. WORK	
	PRIME A/E	MERIDIEN GROUP / CITADEL DCA
	SUB A/E	
BUILDING	NAME	
	STREET	
	CITY/ST./ZIP	WASHINGTON, DC
	BUILDING NO.	DC-
	OTHER BUILDING NOs.	
	FACILITY CODE	
PROJECT	PROJECT TITLE	FEDERAL OFFICE BUILDING MT 2453 OFFICE RENOVATION
	PROJECT DESCRIPTION	RENOVATION OF SECOND FLOOR SUITE
	PROJECT NO.	MT2453_26_004
	GSA PM	BARBARA CHOATE
	SUBMISSION	100% SUBMISSION FOR REVIEW
	SUB. DATE	28 APRIL 2026
DRAWING	DRAWING TITLE	EXISTING, DEMOLITION AND PROTECTION
	FILE NAME	
	FLOOR NO.	2ND FLOOR
	DRAWN BY	AGF DATE DRAFTED: 04/14/2026
	CHECKED BY	LSP SHEET SIZE: 24 x 36
	DRAWING NO.	AD101
		DISCIPLINE SHEET TYPE SEQUENCE
		SHEET 03 OF 21

GENERAL NOTES

1. CONTRACTOR TO VERIFY EXISTING CONDITIONS BEFORE STARTING. NO FORENSIC DEMOLITION WAS CONDUCTED AT THE TIME OF THE SURVEY. DISCREPANCIES MIGHT BE ENCOUNTERED BETWEEN ACTUAL CONDITIONS AND DRAWINGS. INFORM COR PRIOR TO PROCEEDING w/ WORK
2. IN CASE OF CONFLICTS BETWEEN PLANS, KEY NOTES, SECTIONS, DETAILS AND SPECIFICATIONS, THE MOST STRINGENT REQUIREMENT APPLIES
3. ALL DIMENSIONS ARE GIVEN FROM FINISH WALL OR PARTITION TO FINISH WALL OR PARTITION
4. ALL WORK PROVIDED UNDER THIS CONTRACT SHALL BE NEW UNLESS SPECIFICALLY MARKED "EXISTING," "EXTG", OR "(E)"
5. BEST PRACTICES, METHODS AND MATERIALS, MUST BE FOLLOWED AT ALL TIMES. ANY ITEM NOT SPECIFICALLY LISTED OR SHOWN ON THE CONTRACT DOCUMENTS BUT NECESSARY FOR THE COMPLETION OF THE PROJECT, SHALL BE CONSIDERED PART OF THE CONTRACT'S SCOPE OF WORK
6. THE CONTRACTOR SHALL CLEAN UP ALL ACTIVE WORK AREAS AFTER EACH DAY'S WORK. THE CONTRACTOR IS RESPONSIBLE FOR THE REMOVAL AND PROPER DISPOSAL OF ALL WORK RELATED TRASH AND DEBRIS
7. PROTECT ALL GOVERNMENT PROPERTY ENCOUNTERED AT THE JOB SITE AGAINST DAMAGE. ALL DAMAGES CAUSED BY THE CONTRACTOR SHALL BE REPAIRED OR REPLACED TO MATCH EXISTING AND TO THE SATISFACTION AND APPROVAL OF THE COR
8. AREA OF WORK MUST BE ISOLATED FROM THE REST OF ADJACENT AREAS. PROTECT ALL SURFACES, EQUIPMENT& FURNITURE PRIOR TO START OF WORK.
9. REMOVE ALL HVAC COVERS AS NEEDED. SEAL EXPOSED DUCTS AND VENTS TO PREVENT INTRODUCING DUST INTO THE SYSTEM. (REMOVED COVERS MUST BE REINSTALLED AT END OF THE JOB)
10. PROTECT ALL HISTORIC FABRIC DURING DEMOLITION AND CONSTRUCTION.
11. DO NOT REMOVE HISTORIC FABRIC UNLESS SPECIFICALLY NOTED ON DOCUMENTS. ANY HISTORIC FABRIC REMOVED MUST BE RETURNED TO COR. DO NOT DISPOSE.

DEMOLITION NOTES

1. AS WALL / PARTITION IS REMOVED, ENSURE THAT PLASTER CEILING IS TREATED WITH OUTMOST CARE, AND NO DAMAGE IS INFLICTED TO CEILING, DECORATIVE VAULT RIBS, OR CROWN MOLDING IN THE PROCESS. IF ANY PORTION OF A DECORATIVE ELEMENT IS BROKEN, DO NOT DISPOSE, PORTION MUST REMAIN ON SITE UNTIL ARCHITECT INSPECTS DAMAGE.
2. PLASTER DAMAGE TO BE REPAIRED AS INDICATED ON A-102
3. EXISTING CROWN MOLDING AFFECTED BY THE REMOVAL OF THE PARTITION TO BE RESTORED AS INDICATED ON A-102

KEY / PROTECTION NOTES

1. HISTORIC PLASTER CEILING TO REMAIN UNALTERED. NEW WALLS SHOULD BE BUILD AS PER WALL SECTION TO AVOID DAMAGING THE HISTORIC FABRIC.
2. HISTORIC CROWN MOLDING TO REMAIN. NEW WALLS SHOULD BE BUILD AS PER WALL SECTION TO AVOID DAMAGING THE HISTORIC ELEMENTS.
3. HISTORIC VAULT RIBS TO REMAIN UNALTERED. NEW WALLS SHOULD BE BUILD AS PER WALL SECTION TO AVOID DAMAGING THE HISTORIC FABRIC.
4. EXISTING LIGHTING TO REMAIN. PROTECT DURING CONSTRUCTION
5. EXISTING SPRINKLER HEADS TO REMAIN. PROTECT DURING CONSTRUCTION

SYMBOLS LEGEND

- EXISTING WALLS TO REMAIN
- PORTION OF WALL TO BE REMOVED
- EXISTING DOORS TO BE REMOVED
- FOOTPRINT OF NEW WALL
- EXISTING HISTORIC VAULTED, PLASTER CEILING TO REMAIN UNALTERED. PROTECT DURING CONSTRUCTION
- EXISTING PENDANT LIGHT FIXTURE TO REMAIN AS IS. PROTECT DURING CONSTRUCTION
- EXISTING SPRINKLER HEAD TO REMAIN UNALTERED
- NOT IN THE SCOPE OF WORK

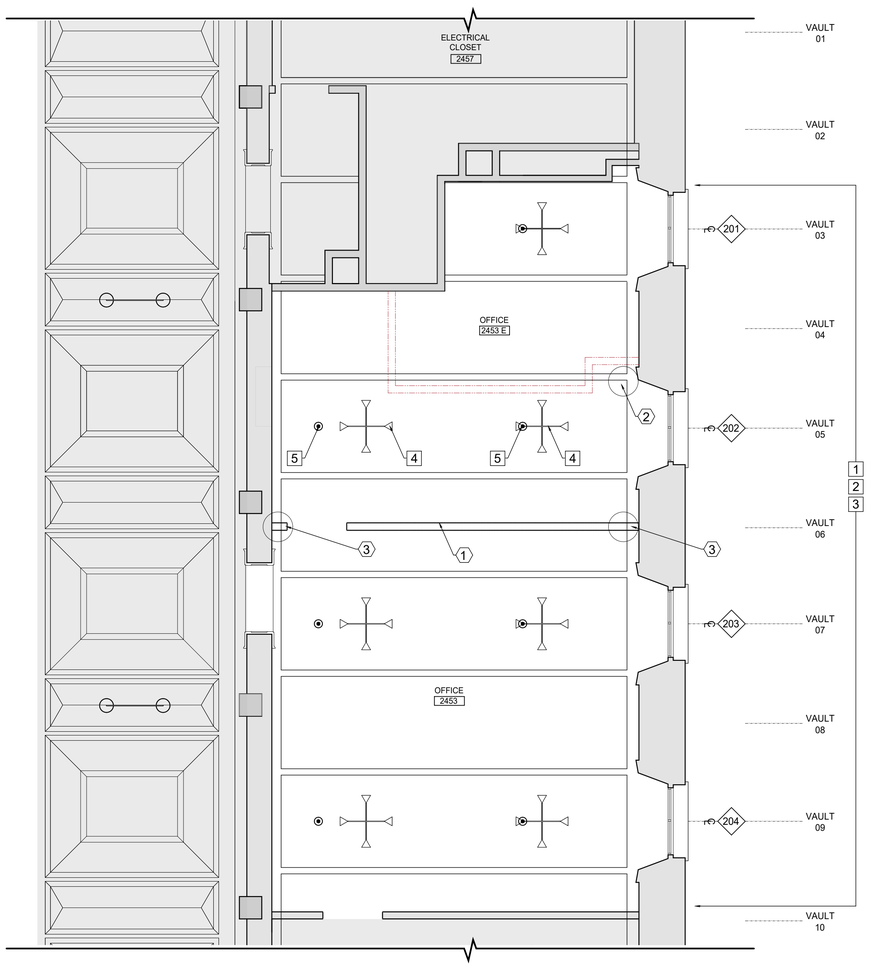

A-1 EXISTING AND DEMOLITION REFLECTED CEILING PLAN (RCP)
1/4" = 1'-0"

MERIDIEN GROUP

MERIDIEN GROUP, LLC
208 SOUTH KING ST. SUITE 303
LEESBURG, VA 20175
(703) 777-8285
www.meridiengroupllc.com

DCA CITADEL
ARCHITECTURE | HISTORIC PRESERVATION | PLANNING | DESIGN

CERTIFICATIONS

KEY PLAN

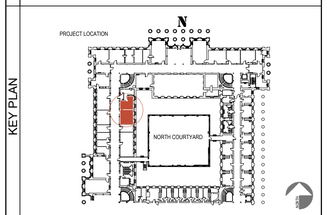

REVISION NOTES

MARK	DATE	DESCRIPTION

GRAPHIC SCALE

1/4" =1'-0"

30" 18" 6" 36" 24" 12" 0 1' 2' 3' 4' 5' 6' 7' 8'

CAUTION: IF THIS DRAWING IS A REDUCTION THIS GRAPHIC SCALE MUST BE USED

CONTRACTORS	A/E CON. NO.	
	A/E TASK NO.	
	CONS. CONTR	
	CONS. WORK	
	PRIME A/E	MERIDIEN GROUP / CITADEL DCA
	SUB A/E	
BUILDING	NAME	
	STREET	
	CITY/ST./ZIP	WASHINGTON, DC
	BUILDING NO.	DC-
	OTHER	
	BUILDING NOs.	
	FACILITY CODE	
PROJECT	PROJECT TITLE	FEDERAL OFFICE BUILDING MT 2453 OFFICE RENOVATION
	PROJECT DESCRIPTION	RENOVATION OF SECOND FLOOR SUITE
	PROJECT NO.	MT2453_26_004
	GSA PM	BARBARA CHOATE
	SUBMISSION	100% SUBMISSION FOR REVIEW
	SUB. DATE	28 APRIL 2026
DRAWING	DRAWING TITLE	EXISTING, DEMOLITION AND PROTECTION RCP
	FILE NAME	
	FLOOR NO.	2ND FLOOR
	DRAWN BY	AGF DATE DRAFTED: 04/14/2026
	CHECKED BY	LSP SHEET SIZE: 24 x 36
	DRAWING NO.	AD102
		DISCIPLINE SHEET TYPE SEQUENCE
		SHEET 04 OF 21

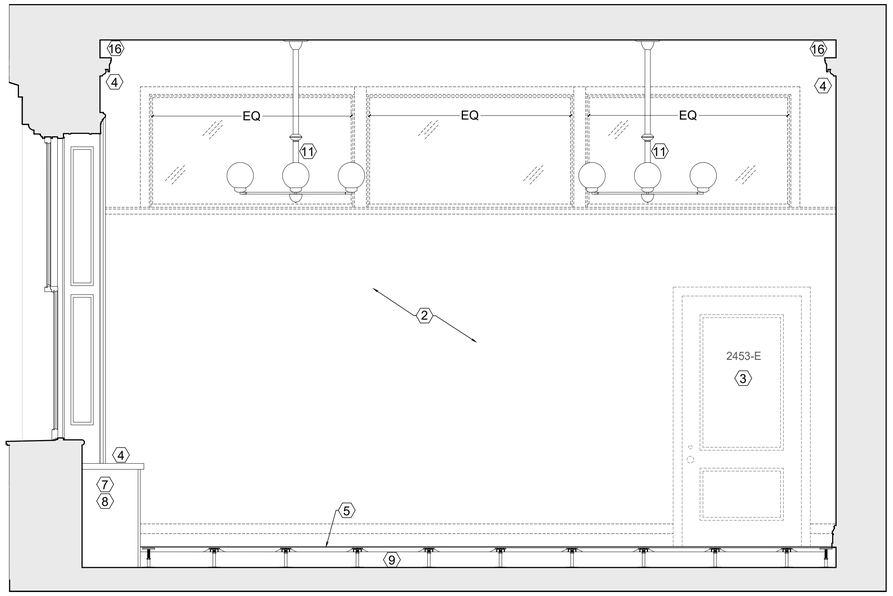

C-1 EXISTING & DEMOLITION : SECTION 1 - 1
1/2" = 1'-0"

GENERAL NOTES

1. CONTRACTOR TO VERIFY EXISTING CONDITIONS BEFORE STARTING. NO FORENSIC DEMOLITION WAS CONDUCTED AT THE TIME OF THE SURVEY. DISCREPANCIES MIGHT BE ENCOUNTERED BETWEEN ACTUAL CONDITIONS AND DRAWINGS. INFORM COR PRIOR TO PROCEEDING w/ WORK
2. IN CASE OF CONFLICTS BETWEEN PLANS, KEY NOTES, SECTIONS, DETAILS AND SPECIFICATIONS, THE MOST STRINGENT REQUIREMENT APPLIES
3. ALL DIMENSIONS ARE GIVEN FROM FINISH WALL OR PARTITION TO FINISH WALL OR PARTITION
4. ALL WORK PROVIDED UNDER THIS CONTRACT SHALL BE NEW UNLESS SPECIFICALLY MARKED "EXISTING," "EXTG", OR "(E)"
5. BEST PRACTICES, METHODS AND MATERIALS, MUST BE FOLLOWED AT ALL TIMES. ANY ITEM NOT SPECIFICALLY LISTED OR SHOWN ON THE CONTRACT DOCUMENTS BUT NECESSARY FOR THE COMPLETION OF THE PROJECT, SHALL BE CONSIDERED PART OF THE CONTRACT'S SCOPE OF WORK
6. THE G.C. SHALL CLEAN UP ALL ACTIVE WORK AREAS AFTER EACH DAY'S WORK. THE G.C. IS RESPONSIBLE FOR THE REMOVAL AND PROPER DISPOSAL OF ALL WORK RELATED TRASH AND DEBRIS
7. PROTECT ALL GOVERNMENT PROPERTY ENCOUNTERED AT THE JOB SITE AGAINST DAMAGE. ALL DAMAGES CAUSED BY THE CONTRACTOR SHALL BE REPAIRED OR REPLACED TO MATCH EXISTING AND TO THE SATISFACTION AND APPROVAL OF THE COR
8. AREA OF WORK MUST BE ISOLATED FROM THE REST OF ADJACENT AREAS. PROTECT ALL SURFACES, EQUIPMENT& FURNITURE PRIOR TO START OF WORK.
9. REMOVE ALL HVAC COVERS AS NEEDED. SEAL EXPOSED DUCTS AND VENTS TO PREVENT INTRODUCING DUST DUST INTO THE SYSTEM. (REMOVED COVERS MUST BE REINSTALLED AT END OF THE JOB)
10. PROTECT ALL HISTORIC FABRIC DURING DEMOLITION AND CONSTRUCTION.
11. DO NOT REMOVE HISTORIC FABRIC UNLESS SPECIFICALLY NOTED ON DOCUMENTS. ANY HISTORIC FABRIC REMOVED MUST BE RETURNED TO COR. DO NOT DISPOSE.

DEMOLITION & PROTECTION NOTES

1. ERECT ZIP WALLS OR EQUIVALENT FROM TATE FLOOR SYSTEM TO HISTORIC CEILING TO ENCLOSE PROJECT AREA
2. EXISTING NON-ORIGINAL PARTITION W/ BASEBOARD AND CLERESTORY WINDOWS TO BE REMOVED
3. EXISTING 2-PANEL DOOR W/ FLAT CASING TO BE REMOVED. DISPOSE OF CASING AND RETURN HARDWARE TO COR.

   NOTE: IF DOOR ASSEMBLY (DOOR LEAF + FRAME) IS IN GOOD CONDITION AND IT IS APPROVED BY TREASURY'S COR, KEEP THE ASSEMBLY ON SITE DOOR TO BE REUSED AT NEW OFFICE LOCATION.
4. EXISTING MILLWORK AND CROWN MOLDING AFFECTED BY THE REMOVAL OF THE PARTITION TO BE RESTORED
5. DEMOLISH EXISTING CARPET FROM PROJECT AREA. REMOVE GLUE AND CLEAN FLOOR SYSTEM PANELS AS NEEDED. STORE PANELS AND CARPET ON SITE AND REINSTALL ALTERED AT THE COMPLETION OF THE JOB.
6. EXISTING DOOR ASSEMBLY TO REMAIN. DO NOT ALTER AND PROTECT DURING CONSTRUCTION
7. EXISTING FCU TO REMAIN. COVER DURING CONSTRUCTION TO PREVENT DUST FROM ENTERING THE VENTS
8. EXISTING FCU MILLWORK TO REMAIN UNALTERED. DO NOT ALTER AND PROTECT DURING CONSTRUCTION PRIOR TO ITS PREP FOR REFINISHING
9. EXISTING FLOOR SYSTEM AND ELECTRICAL BOXES TO REMAIN UNALTERED. PROTECT FLOOR BOXES DURING CONSTRUCTION
10. EXISTING ORIGINAL MASONRY WALL AND BASEBOARD TO REMAIN UNALTERED. PROTECT DURING CONSTRUCTION PRIOR TO ITS PREP FOR REFINISHING
11. EXISTING LIGHT FIXTURES AND FIRE SUPPRESSION SYSTEM TO REMAIN UNALTERED. PROTECT DURING CONSTRUCTION PRIOR TO ITS PREP FOR REFINISHING
12. EXISTING NOT ORIGINAL WALL AND BASEBOARD TO REMAIN UNALTERED. PROTECT DURING CONSTRUCTION PRIOR TO ITS PREP FOR REFINISHING
13. EXISTING ORIGINAL BUILT-IN BOOK CASE TO REMAIN UNALTERED. PROTECT DURING CONSTRUCTION PRIOR TO ITS PREP FOR REFINISHING
14. EXISTING NON-ORIGINAL PARTITION W/ BASEBOARD AND CLERESTORY WINDOWS TO REMAIN UNALTERED. PROTECT DURING CONSTRUCTION PRIOR TO ITS PREP FOR REFINISHING
15. EXISTING DOOR ASSEMBLY TO REMAIN. DO NOT ALTER AND PROTECT DURING CONSTRUCTION PRIOR TO ITS PREP FOR REFINISHING
16. ORIGINAL HISTORIC VAULTED PLASTER CEILING, CROWN MOLDING AND CEILING RIB MOLDING TO REMAIN UNALTERED. NEW PARTITIONS SHOULD BE BUILD AS PER WALL SECTIONS TO AVOID DAMAGING THE HISTORIC ELEMENTS. HISTORIC PLASTER MOLDINGS MUST NOT BE CUT OR ALTERED IN ANY MANNER

LEGEND

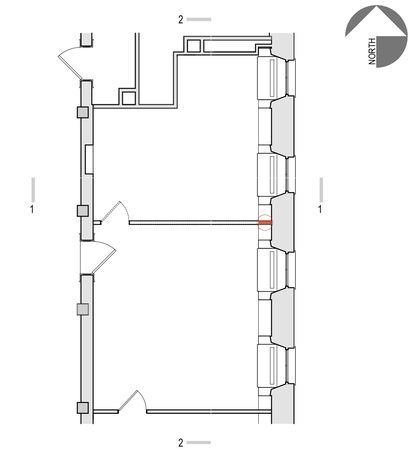

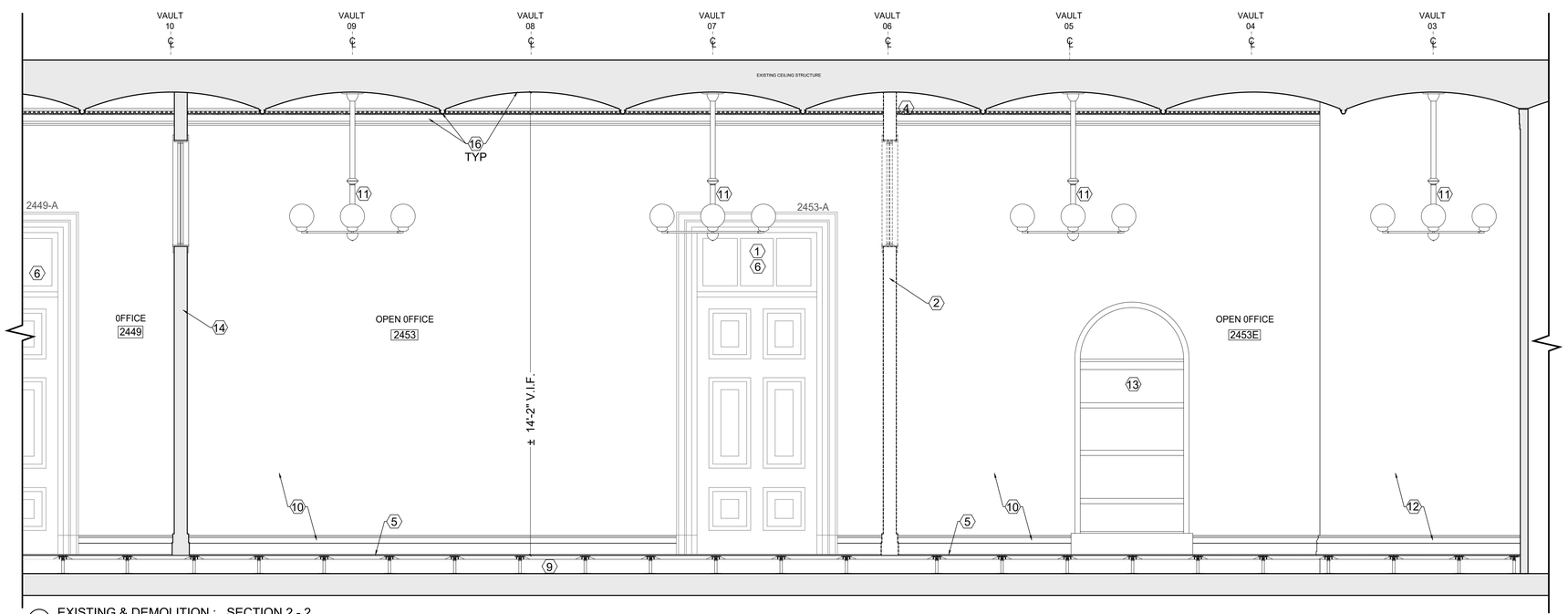

A-1 EXISTING & DEMOLITION : SECTION 2 - 2
1/2" = 1'-0"

MERIDIEN GROUP

MERIDIEN GROUP, LLC
208 SOUTH KING ST. SUITE 303
LEESBURG, VA 20175
(703) 777-8285
www.meridiengroupllc.com

CITADEL
ARCHITECTURE | HISTORIC PRESERVATION | PLANNING | DESIGN

CERTIFICATIONS

KEY PLAN

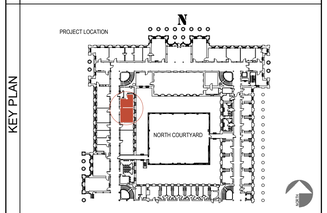

REVISION NOTES

MARK	DATE	DESCRIPTION

GRAPHIC SCALE

1/2" = 1' - 0"

CAUTION: IF THIS DRAWING IS A REDUCTION THIS GRAPHIC SCALE MUST BE USED

CONTRACTORS	A/E CON. NO.	
	A/E TASK NO.	
	CONS. CONTR	
	CONS. WORK	
	PRIME A/E	MERIDIEN GROUP / CITADEL DCA
	SUB A/E	
BUILDING	NAME	
	STREET	
	CITY/ST./ZIP	WASHINGTON, DC
	BUILDING NO.	DC-
	OTHER	
	BUILDING NOs.	
	FACILITY CODE	
PROJECT	PROJECT TITLE	FEDERAL OFFICE BUILDING MT 2453 OFFICE RENOVATION
	PROJECT DESCRIPTION	RENOVATION OF SECOND FLOOR SUITE
	PROJECT NO.	MT2453_26_004
	GSA PM	BARBARA CHOATE
	SUBMISSION	100% SUBMISSION FOR REVIEW
	SUB. DATE	28 APRIL 2026
DRAWING	DRAWING TITLE	EXISTING AND DEOLITION
	FILE NAME	
	FLOOR NO.	2ND FLOOR
	DRAWN BY	AGF DATE DRAFTED: 04/14/2026
	CHECKED BY	LSP SHEET SIZE: 24 x 36
	DRAWING NO.	AD201

DISCIPLINE	SHEET TYPE	SEQUENCE
SHEET	05 OF	21

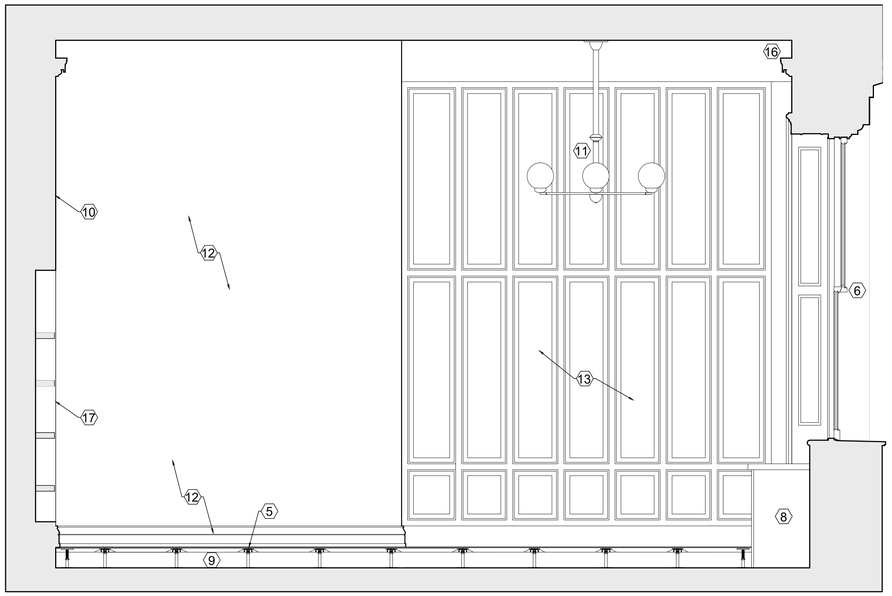

C-1 EXISTING & DEMOLITION : SECTION 3 - 3
1/2" = 1'-0"

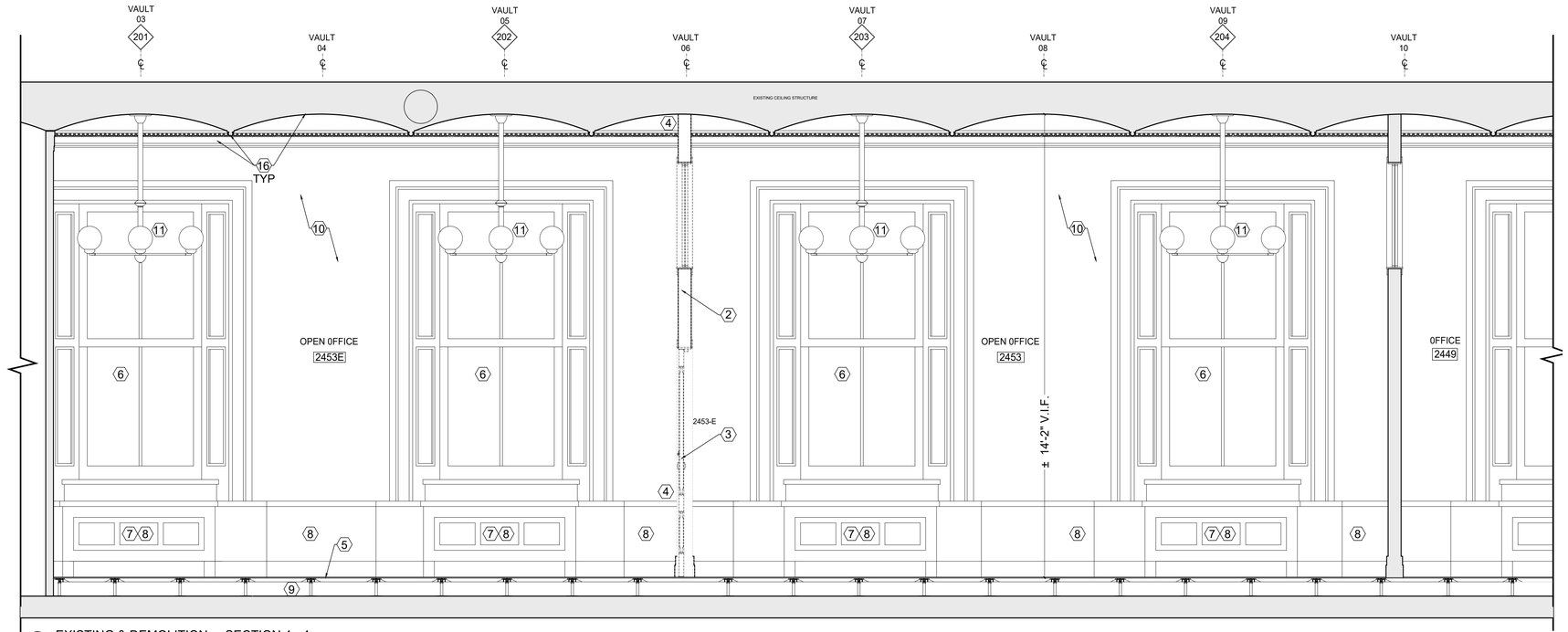

A-1 EXISTING & DEMOLITION : SECTION 4 - 4
1/2" = 1'-0"

GENERAL NOTES

1. CONTRACTOR TO VERIFY EXISTING CONDITIONS BEFORE STARTING. NO FORENSIC DEMOLITION WAS CONDUCTED AT THE TIME OF THE SURVEY. DISCREPANCIES MIGHT BE ENCOUNTERED BETWEEN ACTUAL CONDITIONS AND DRAWINGS. INFORM COR PRIOR TO PROCEEDING w/ WORK
2. IN CASE OF CONFLICTS BETWEEN PLANS, KEY NOTES, SECTIONS, DETAILS AND SPECIFICATIONS, THE MOST STRINGENT REQUIREMENT APPLIES
3. ALL DIMENSIONS ARE GIVEN FROM FINISH WALL OR PARTITION TO FINISH WALL OR PARTITION
4. ALL WORK PROVIDED UNDER THIS CONTRACT SHALL BE NEW UNLESS SPECIFICALLY MARKED "EXISTING," "EXTG", OR "(E)"
5. BEST PRACTICES, METHODS AND MATERIALS, MUST BE FOLLOWED AT ALL TIMES. ANY ITEM NOT SPECIFICALLY LISTED OR SHOWN ON THE CONTRACT DOCUMENTS BUT NECESSARY FOR THE COMPLETION OF THE PROJECT, SHALL BE CONSIDERED PART OF THE CONTRACT'S SCOPE OF WORK
6. THE G.C. SHALL CLEAN UP ALL ACTIVE WORK AREAS AFTER EACH DAY'S WORK. THE G.C. IS RESPONSIBLE FOR THE REMOVAL AND PROPER DISPOSAL OF ALL WORK RELATED TRASH AND DEBRIS
7. PROTECT ALL GOVERNMENT PROPERTY ENCOUNTERED AT THE JOB SITE AGAINST DAMAGE. ALL DAMAGES CAUSED BY THE CONTRACTOR SHALL BE REPAIRED OR REPLACED TO MATCH EXISTING AND TO THE SATISFACTION AND APPROVAL OF THE COR
8. AREA OF WORK MUST BE ISOLATED FROM THE REST OF ADJACENT AREAS. PROTECT ALL SURFACES, EQUIPMENT& FURNITURE PRIOR TO START OF WORK.
9. REMOVE ALL HVAC COVERS AS NEEDED. SEAL EXPOSED DUCTS AND VENTS TO PREVENT INTRODUCING DUST DUST INTO THE SYSTEM. (REMOVED COVERS MUST BE REINSTALLED AT END OF THE JOB)
10. PROTECT ALL HISTORIC FABRIC DURING DEMOLITION AND CONSTRUCTION.
11. DO NOT REMOVE HISTORIC FABRIC UNLESS SPECIFICALLY NOTED ON DOCUMENTS. ANY HISTORIC FABRIC REMOVED MUST BE RETURNED TO COR. DO NOT DISPOSE.

DEMOLITION & PROTECTION NOTES

1. ERECT ZIP WALLS OR EQUIVALENT FROM TATE FLOOR SYSTEM TO HISTORIC CEILING TO ENCLOSE PROJECT AREA (NOT DEPICTED ON THIS DRAWING)
2. EXISTING NON-ORIGINAL PARTITION W/ BASEBOARD AND CLERESTORY WINDOWS TO BE REMOVED
3. EXISTING 2-PANEL DOOR W/ FLAT CASING TO BE REMOVED. DISPOSE OF CASING AND RETURN HARDWARE TO COR.

   NOTE: IF DOOR ASSEMBLY (DOOR LEAF + FRAME) IS IN GOOD CONDITION AND IT IS APPROVED BY TREASURY'S COR, KEEP THE ASSEMBLY ON SITE DOOR TO BE REUSED AT NEW OFFICE LOCATION.
4. EXISTING MILLWORK AND CROWN MOLDING AFFECTED BY THE REMOVAL OF THE PARTITION TO BE RESTORED
5. DEMOLISH EXISTING CARPET FROM PROJECT AREA. REMOVE GLUE AND CLEAN FLOOR SYSTEM PANELS AS NEEDED. STORE PANELS AND CARPET ON SITE AND REINSTALL ALTERED AT THE COMPLETION OF THE JOB.
6. EXISTING WINDOW WITH ORIGINAL CAST IRON SURROUND TO REMAIN UNALTERED. PROTECT DURING CONSTRUCTION PRIOR TO ITS PREP FOR REFINISHING THE SURROUND AND SILL
7. EXISTING FCU TO REMAIN. COVER DURING CONSTRUCTION TO PREVENT DUST FROM ENTERING THE VENTS
8. EXISTING FCU MILLWORK TO REMAIN UNALTERED. DO NOT ALTER AND PROTECT DURING CONSTRUCTION PRIOR TO ITS PREP FOR REFINISHING
9. EXISTING FLOOR SYSTEM AND ELECTRICAL BOXES TO REMAIN UNALTERED. PROTECT FLOOR BOXES DURING CONSTRUCTION
10. EXISTING ORIGINAL MASONRY WALL AND BASEBOARD TO REMAIN UNALTERED. PROTECT DURING CONSTRUCTION PRIOR TO ITS PREP FOR REFINISHING
11. EXISTING LIGHT FIXTURES AND FIRE SUPPRESSION SYSTEM TO REMAIN UNALTERED. PROTECT DURING CONSTRUCTION PRIOR TO ITS PREP FOR REFINISHING
12. EXISTING NOT ORIGINAL WALL AND BASEBOARD TO REMAIN UNALTERED. PROTECT DURING CONSTRUCTION PRIOR TO ITS PREP FOR REFINISHING
13. EXISTING NON-ORIGINAL PANELED PARTITION W/ BASEBOARD TO REMAIN UNALTERED. PROTECT DURING CONSTRUCTION PRIOR TO ITS PREP FOR REFINISHING
14. EXISTING NON-ORIGINAL PARTITION W/ BASEBOARD AND CLERESTORY WINDOWS TO REMAIN UNALTERED. PROTECT DURING CONSTRUCTION PRIOR TO ITS PREP FOR REFINISHING
15. EXISTING DOOR ASSEMBLY TO REMAIN. DO NOT ALTER AND PROTECT DURING CONSTRUCTION PRIOR TO ITS PREP FOR REFINISHING
16. ORIGINAL HISTORIC VAULTED PLASTER CEILING, CROWN MOLDING AND CEILING RIB MOLDING TO REMAIN UNALTERED. NEW PARTITIONS SHOULD BE BUILD AS PER WALL SECTIONS TO AVOID DAMAGING THE HISTORIC ELEMENTS. HISTORIC PLASTER MOLDINGS MUST NOT BE CUT OR ALTERED
17. EXISTING ORIGINAL BUILT-IN BOOK CASE TO REMAIN UNALTERED. PROTECT DURING CONSTRUCTION PRIOR TO REFINISHING

LEGEND

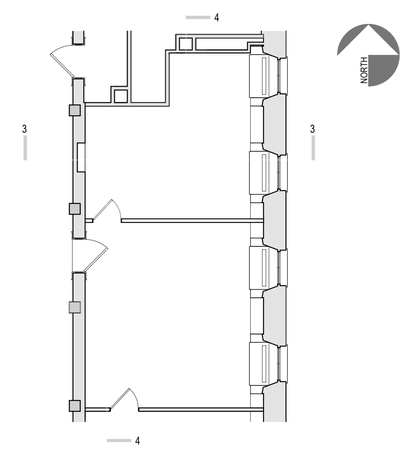

MERIDIEN GROUP

MERIDIEN GROUP, LLC
208 SOUTH KING ST. SUITE 303
LEESBURG, VA 20175
(703) 777-8285
www.meridiengroupllc.com

CITADEL
ARCHITECTURE | HISTORIC PRESERVATION | PLANNING | DESIGN

CERTIFICATIONS

KEY PLAN

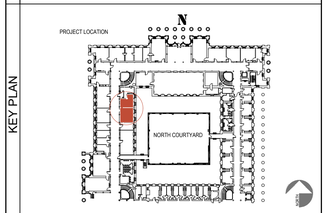

REVISION NOTES

MARK	DATE	DESCRIPTION

GRAPHIC SCALE

1/2" = 1' - 0"

CAUTION: IF THIS DRAWING IS A REDUCTION THIS GRAPHIC SCALE MUST BE USED

CONTRACTORS	A/E CON. NO.	
	A/E TASK NO.	
	CONS. CONTR	
	CONS. WORK	
	PRIME A/E	MERIDIEN GROUP / CITADEL DCA
	SUB A/E	
BUILDING	NAME	
	STREET	
	CITY/ST./ZIP	WASHINGTON, DC
	BUILDING NO.	DC-
	OTHER	
	BUILDING NOs.	
	FACILITY CODE	
PROJECT	PROJECT TITLE	FEDERAL OFFICE BUILDING MT 2453 OFFICE RENOVATION
	PROJECT DESCRIPTION	RENOVATION OF SECOND FLOOR SUITE
	PROJECT NO.	MT2453_26_004
	GSA PM	BARBARA CHOATE
	SUBMISSION	100% SUBMISSION FOR REVIEW
	SUB. DATE	28 APRIL 2026
DRAWING	DRAWING TITLE	EXISTING AND DEOLITION
	FILE NAME	
	FLOOR NO.	2ND FLOOR
	DRAWN BY	AGF DATE DRAFTED: 04/14/2026
	CHECKED BY	LSP SHEET SIZE: 24 x 36
	DRAWING NO.	AD202

DISCIPLINE	SHEET TYPE	SEQUENCE
SHEET	06 OF	21

GENERAL NOTES

1. CONTRACTOR TO VERIFY EXISTING CONDITIONS BEFORE STARTING. NO FORENSIC DEMOLITION WAS CONDUCTED AT THE TIME OF THE SURVEY. DISCREPANCIES MIGHT BE ENCOUNTERED BETWEEN ACTUAL CONDITIONS AND DRAWINGS. INFORM COR PRIOR TO PROCEEDING w/ WORK
2. IN CASE OF CONFLICTS BETWEEN PLANS, KEY NOTES, SECTIONS, DETAILS AND SPECIFICATIONS, THE MOST STRINGENT REQUIREMENT APPLIES
3. ALL DIMENSIONS ARE GIVEN FROM FINISH WALL OR PARTITION TO FINISH WALL OR PARTITION
4. ALL WORK PROVIDED UNDER THIS CONTRACT SHALL BE NEW UNLESS SPECIFICALLY MARKED "EXISTING," "EXTG", OR "(E)"
5. BEST PRACTICES, METHODS AND MATERIALS, MUST BE FOLLOWED AT ALL TIMES. ANY ITEM NOT SPECIFICALLY LISTED OR SHOWN ON THE CONTRACT DOCUMENTS BUT NECESSARY FOR THE COMPLETION OF THE PROJECT, SHALL BE CONSIDERED PART OF THE CONTRACT'S SCOPE OF WORK
6. THE CONTRACTOR SHALL CLEAN UP ALL ACTIVE WORK AREAS AFTER EACH DAY'S WORK. THE CONTRACTOR IS RESPONSIBLE FOR THE REMOVAL AND PROPER DISPOSAL OF ALL WORK RELATED TRASH AND DEBRIS
7. PROTECT ALL GOVERNMENT PROPERTY ENCOUNTERED AT THE JOB SITE AGAINST DAMAGE. ALL DAMAGES CAUSED BY THE CONTRACTOR SHALL BE REPAIRED OR REPLACED TO MATCH EXISTING AND TO THE SATISFACTION AND APPROVAL OF THE COR
8. AREA OF WORK MUST BE ISOLATED FROM THE REST OF ADJACENT AREAS. PROTECT ALL SURFACES, EQUIPMENT& FURNITURE PRIOR TO START OF WORK.
9. REMOVE ALL HVAC COVERS AS NEEDED. SEAL EXPOSED DUCTS AND VENTS TO PREVENT INTRODUCING DUST INTO THE SYSTEM. (REMOVED COVERS MUST BE REINSTALLED AT END OF THE JOB)
10. PROTECT ALL HISTORIC FABRIC DURING DEMOLITION AND CONSTRUCTION.
11. DO NOT REMOVE HISTORIC FABRIC UNLESS SPECIFICALLY NOTED ON DOCUMENTS. ANY HISTORIC FABRIC REMOVED MUST BE RETURNED TO COR. DO NOT DISPOSE.

KEY NOTES

1. NEW 4 7/8" PARTITION (3 5/8" 16 GA STEEL STUDS, 5/8" GWB EACH SIDE, & 3 1/2" BATT INSULATION) TO EXTEND FROM TOP OF TATE RAISED FLOOR TO HISTORIC PLASTER CEILING. SECTION UNDER THE FLOOR SYSTEM TO RECEIVE (2) LAYERS OF GWB EACH SIDE. SEE ROOM SECTIONS AND WALL TYPE. FINISHES AS PER FINISHES SCHEDULE.
2. EXISTING MILLWORK TO REMAIN UNALTERED. PROTECT DURING CONSTRUCTION. FRAME NEW PARTITION AROUND MILLWORK AS PER SECTION AND FRAMING PLAN. DO NOT ALTER MILLWORK. REFINISH IN KIND AS PER FINISHES SCHEDULE
3. REMOVE PORTION OF EXISTING NOT ORIGINAL BASEBOARD AS NEEDED TO INSTALL NEW PARTITION
4. WHERE THE NEW PARTITION IS ATTACHED TO EXISTING EXTERIOR MASONRY & PLASTER WALL INSTALL A MOISTURE BARRIER THE WIDTH OF THE STUDS FULL HEIGHT
5. NEW DOOR ASSEMBLY CONSISTING OF A 2-PANEL DOOR LEAF & FLAT CASING PAINTED TO MATCH EXACTLY EXISTING DOOR ASSEMBLY 2453-E (HEIGHT, PROFILE AND WIDTH OF CASING) HARDWARE WILL DIFFER TO COMPLY WITH ADA. SEE DOOR AND HARDWARE SCHEDULE

   NOTE: IF EXISTING DOOR 2453 E IS USABLE AND IT IS APPROVED BY TREASURY'S COR, REINSTALL EXISTING ASSEMBLY, LEAF AND FRAME, BUT INSTALL NEW HARDWARE AS PER SCHEDULE AND CASING
6. INSTALL NEW CARPET ON CLEAN FLOOR SYSTEM PANELS AS PER FINISHES SCHEDULE. FOLLOW THE MANUFACTURER SPECIFICATIONS FOR INSTALLATION
7. EXISTING ORIGINAL MASONRY WALL AND BASEBOARD TO REMAIN UNALTERED. PROTECT DURING CONSTRUCTION
8. EXISTING WINDOW WITH ORIGINAL CAST IRON SURROUND TO REMAIN UNALTERED. PROTECT DURING CONSTRUCTION. REFINISH CAST IRON SURROUND, JAMBS AND SILL AS PER FINISHES SCHEDULE (IN KIND)
9. HISTORIC CROWN MOLDING AND CEILING RIB MOLDING TO REMAIN. NEW PARTITIONS SHOULD BE BUILD AS PER WALL SECTIONS TO AVOID DAMAGING THE HISTORIC ELEMENTS. HISTORIC PLASTER MOLDINGS MUST NOT BE CUT OR ALTERED IN ANY MANNER
10. EXISTING FCU TO REMAIN. COVER DURING CONSTRUCTION TO PREVENT DUST FROM ENTERING THE VENTS. REFINISH MILLWORK WITHIN ROOM 2453-D AS PER FINISHES SCHEDULE (IN KIND)
11. NEW PARTITION TO RECEIVE $\frac{3}{4}$" THICK STRAIGHT BASEBOARD (PAINTED) TO MATCH THE HEIGHT OF THE FIRST STEP OF THE EXISTING, ORIGINAL BASEBOARD ON BOTH SIDES
12. PATCH AND PREP ENTIRE SPACE FOR NEW PAINT, ALL ELEMENTS THAT ARE CURRENTLY PAINTED INCLUDED (WALLS, CEILING, CROWN MOLDING, BASEBOARD, FCU CABINETS, WINDOWS, DOORS AND NICHE) REFINISH ALL COMPONENTS AS PER FINISHES SCHEDULE
13. FOR PLASTER REPAIRS, FOLLOW RESTORATION GUIDELINES INCLUDED UNDER THE HEADING "PLASTER REPAIRS AND RESTORATION METHODS AND MATERIALS" ON A-102. DO NOT USE JOINT OR SPACKLING COMPOUND.
14. DO NOT USE WOOD FILLERS NOT LABELED FOR THAT PURPOSE TO REPAIR HISTORIC AND NON-HISTORIC ELEMENTS
15. NEW SYSTEMS FURNITURE BY TREASURY
16. INSTALL A FIRE ALARM DEVICE COMBINATION SPEAKER AND ADA STROBE DEVICE. WALL MOUNTED CD= CANDELA RATING

SYMBOLS LEGEND

- EXISTING WALL TO REMAIN
- NEW WALL AS PER WALL TYPE
- EXISTING DOOR ASSEMBLY WITHIN THE AREA OF WORK TO REMAIN
- EXISTING DOOR ASSEMBLY OUTSIDE THE AREA OF WORK TO REMAIN
- DOOR NUMBER / NEW DOOR ASSEMBLY
- NEW SYSTEMS FURNITURE BY TREASURY
- EXISTING FCU AND ASSOCIATED PIPING CABINET TO REMAIN AS IS. PROTECT DURING CONSTRUCTION PRIOR TO REFINISHING
- NOT IN THE SCOPE OF WORK
- XXcd — COMBINATION SPEAKER AND ADA STROBE DEVICE. WALL MOUNTED CD= CANDELA RATING

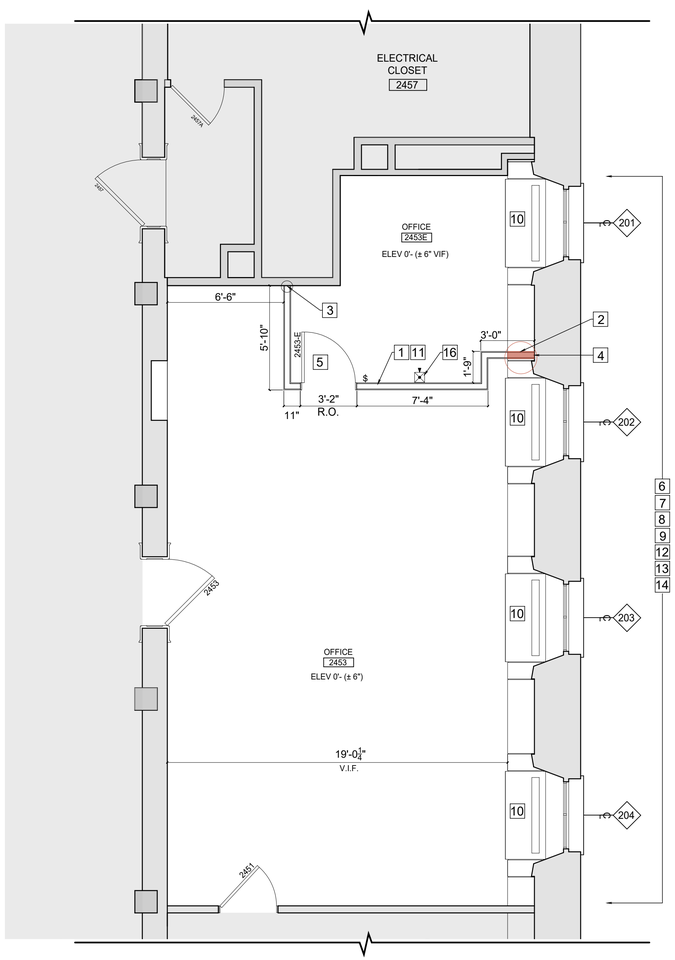

A-1 NEW WORK | FLOOR PLAN
1/4" = 1'-0"

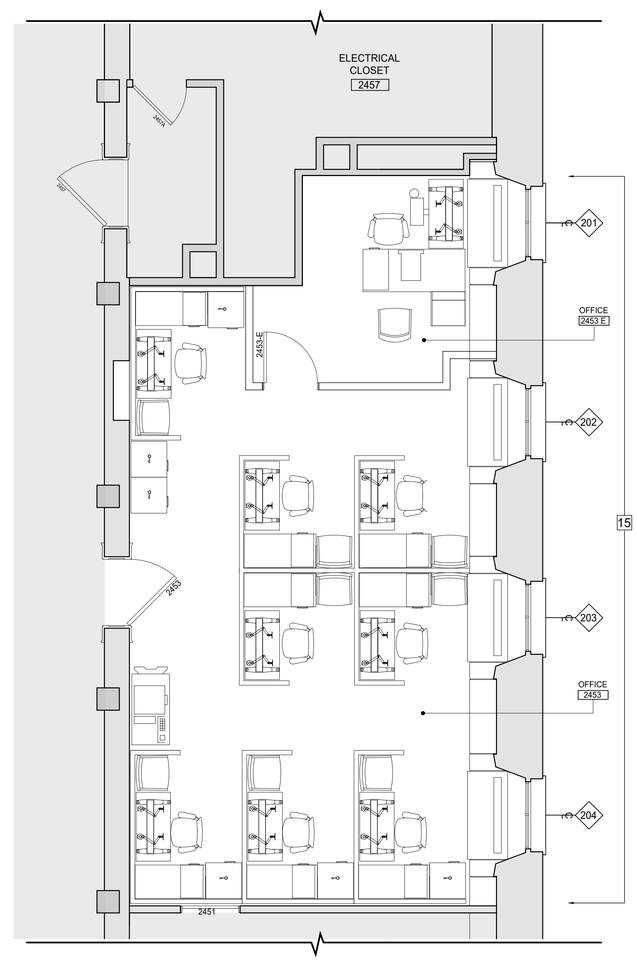

A-3 NEW WORK | FLOOR PLAN WITH NEW FURNITURE
1/4" = 1'-0"

MERIDIEN GROUP

MERIDIEN GROUP, LLC
208 SOUTH KING ST. SUITE 303
LEESBURG, VA 20175
(703) 777-8285
www.meridiengroupllc.com

CITADEL DCA
ARCHITECTURE | HISTORIC PRESERVATION | PLANNING | DESIGN

CERTIFICATIONS

KEY PLAN

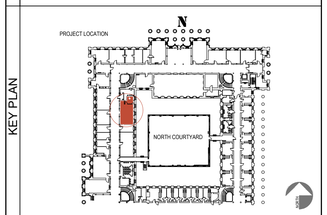

REVISION NOTES

MARK	DATE	DESCRIPTION

GRAPHIC SCALE

1/4" =1'-0"

30" 18" 6" 36" 24" 12" 0 1' 2' 3' 4' 5' 6' 7' 8'

CAUTION: IF THIS DRAWING IS A REDUCTION THIS GRAPHIC SCALE MUST BE USED

CAUTION: IF THIS DRAWING IS A REDUCTION THIS GRAPHIC SCALE MUST BE USED

CONTRACTORS	A/E CON. NO.	
	A/E TASK NO.	
	CONS. CONTR	
	CONS. WORK	
	PRIME A/E	MERIDIEN GROUP / CITADEL DCA
	SUB A/E	
BUILDING	NAME	
	STREET	
	CITY/ST./ZIP	WASHINGTON, DC
	BUILDING NO.	DC-
	OTHER BUILDING NOs.	
	FACILITY CODE	
PROJECT	PROJECT TITLE	FEDERAL OFFICE BUILDING MT 2453 OFFICE RENOVATION
	PROJECT DESCRIPTION	RENOVATION OF SECOND FLOOR SUITE
	PROJECT NO.	MT2453_26_004
	GSA PM	BARBARA CHOATE
	SUBMISSION	100% SUBMISSION FOR REVIEW
	SUB. DATE	28 APRIL 2026
DRAWING	DRAWING TITLE	NEW WORK
	FILE NAME	
	FLOOR NO.	2ND FLOOR
	DRAWN BY	AGF DATE DRAFTED: 04/14/2026
	CHECKED BY	LSP SHEET SIZE: 24 x 36
	DRAWING NO.	A-101
		DISCIPLINE SHEET TYPE SEQUENCE
		SHEET 07 OF 21

GENERAL NOTES

1. CONTRACTOR TO VERIFY EXISTING CONDITIONS BEFORE STARTING. NO FORENSIC DEMOLITION WAS CONDUCTED AT THE TIME OF THE SURVEY. DISCREPANCIES MIGHT BE ENCOUNTERED BETWEEN ACTUAL CONDITIONS AND DRAWINGS. INFORM COR PRIOR TO PROCEEDING w/ WORK
2. IN CASE OF CONFLICTS BETWEEN PLANS, KEY NOTES, SECTIONS, DETAILS AND SPECIFICATIONS, THE MOST STRINGENT REQUIREMENT APPLIES
3. ALL DIMENSIONS ARE GIVEN FROM FINISH WALL OR PARTITION TO FINISH WALL OR PARTITION
4. ALL WORK PROVIDED UNDER THIS CONTRACT SHALL BE NEW UNLESS SPECIFICALLY MARKED "EXISTING," "EXTG", OR "(E)"
5. BEST PRACTICES, METHODS AND MATERIALS, MUST BE FOLLOWED AT ALL TIMES. ANY ITEM NOT SPECIFICALLY LISTED OR SHOWN ON THE CONTRACT DOCUMENTS BUT NECESSARY FOR THE COMPLETION OF THE PROJECT, SHALL BE CONSIDERED PART OF THE CONTRACT'S SCOPE OF WORK
6. THE CONTRACTOR SHALL CLEAN UP ALL ACTIVE WORK AREAS AFTER EACH DAY'S WORK. THE CONTRACTOR IS RESPONSIBLE FOR THE REMOVAL AND PROPER DISPOSAL OF ALL WORK RELATED TRASH AND DEBRIS
7. PROTECT ALL GOVERNMENT PROPERTY ENCOUNTERED AT THE JOB SITE AGAINST DAMAGE. ALL DAMAGES CAUSED BY THE CONTRACTOR SHALL BE REPAIRED OR REPLACED TO MATCH EXISTING AND TO THE SATISFACTION AND APPROVAL OF THE COR
8. AREA OF WORK MUST BE ISOLATED FROM THE REST OF ADJACENT AREAS. PROTECT ALL SURFACES, EQUIPMENT& FURNITURE PRIOR TO START OF WORK.
9. REMOVE ALL HVAC COVERS AS NEEDED. SEAL EXPOSED DUCTS AND VENTS TO PREVENT INTRODUCING DUST INTO THE SYSTEM. (REMOVED COVERS MUST BE REINSTALLED AT END OF THE JOB)
10. PROTECT ALL HISTORIC FABRIC DURING DEMOLITION AND CONSTRUCTION.
11. DO NOT REMOVE HISTORIC FABRIC UNLESS SPECIFICALLY NOTED ON DOCUMENTS. ANY HISTORIC FABRIC REMOVED MUST BE RETURNED TO COR. DO NOT DISPOSE.

KEY NOTES

1. HISTORIC CROWN MOLDING AND CEILING RIB MOULDING TO REMAIN. NEW PARTITIONS SHOULD BE BUILD AS PER WALL SECTIONS TO AVOID DAMAGING THE HISTORIC ELEMENTS. HISTORIC PLASTER MOLDINGS MUST NOT BE CUT OR ALTERED IN ANY MANNER
2. FOR PLASTER REPAIRS, FOLLOW RESTORATION GUIDELINES INCLUDED UNDER THE HEADING "PLASTER REPAIRS AND RESTORATION METHODS AND MATERIALS" ON THIS PAGE. DO NOT USE JOINT OR SPACKLING COMPOUND.
3. PLASTER DAMAGE TO BE REPAIRED
4. EXISTING CROWN MOLDING AFFECTED BY THE REMOVAL OF THE PARTITION TO BE RESTORED AS NEEDED
5. EXISTING LIGHT FIXTURES AND FIRE SUPPRESSION SYSTEM TO REMAIN UNALTERED. PROTECT DURING CONSTRUCTION

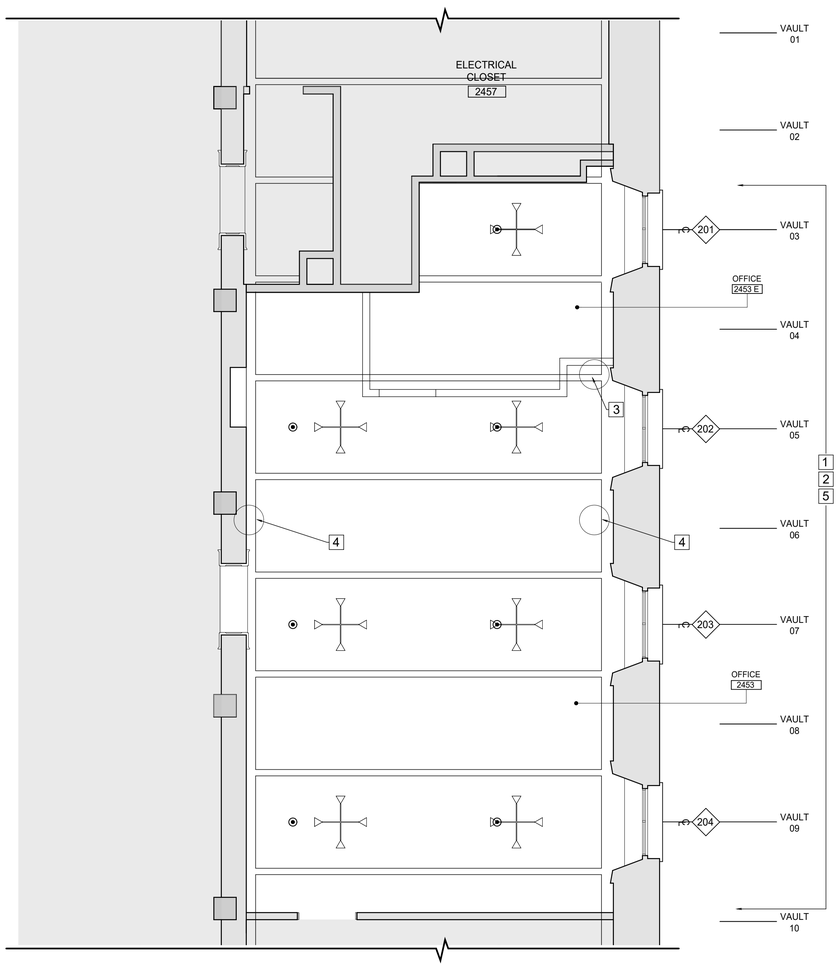

A-1 NEW WORK | REFLECTED CEILING PLAN
1/4" = 1'-0"

PLASTER REPAIRS AND RESTORATION METHODS AND MATERIALS

FLAT PLASTER INFILL

1. INSTALL LIGHT WEIGHT POLY PROTECTION AT ADJACENT SURFACES TO PROTECT FROM PLASTER SPLATTERS.
2. WHERE REQUIRED, INSTALL EXPANDED METAL LATH USING 14 GAUGE GALVANIZED STEEL WIRE.
3. THE METAL LATH TO OVERLAP THE EXISTING LATH AT A MINIMUM OF ONE INCH, AND THE TWO WILL BE TIE-WIRED TOGETHER.
4. WERE POSSIBLE, LATH WILL BE TIED TO METAL FRAMING POINT ABOVE WITH TIE-WIRE.
5. APPLY QUIKRETE OR PLASTWELD WELD BONDING AGENT AT THE EDGES OF EXISTING PLASTER OPENINGS.
6. APPLY 3 COAT PLASTER:
   A. SCRATCH COAT: TROWEL APPLY USG STRUCTUCO LITE BASE ONTO TO THE METAL LATH. PUSH THE FRESHLY APPLIED PLASTER INTO THE LATH FOR PROPER KEYING.
   B. BROWN COAT: TROWEL APPLY USA STRUCTO LITE BASE COAT TO A LEVELED SURFACE. WHILE WET, SCRATCH THE PLASTER WITH RAKE TOOL FOR KEYING.
   C. FINISH COAT: TROWEL APPLY FINISH COAT TO KEYED PLASTER

ORNAMENTAL PLASTER REPAIRS

1. REMOVE EFFLORESCING PLASTER AND OTHER LOOSE MATERIALS.
2. APPLY BONDING AGENT.
3. AT ADJACENT LOCATION, PRODUCE RUBBER MOLD WITH EITHER SMOOTH-ON BRAND POYO PUTTY 40 AND/OR BRUSH-ON 35.
4. AS REQUIRED, APPLY RELEASING AGENT, SMOOTH-ON BRAND SONITE WAX OR SIMILAR.
5. IF REQUIRED, MAKE A MOTHER MOLD USING MOLDING PLASTER AND FILLER, SUCH AS WOOD SCRAPES, HEMP, OR FIBERGLASS MESH.
6. APPLY THINNED, WET MOLDING PLASTER TO RUBBER MOLD. ALLOW TO HARDEN AND REMOVE
7. CUT AND SCULPT NEW PLASTER CASTING TO FIT.
8. FILL IN JOINTS AND INFILL ILL-REGULAR PERIMETER GAPS.
9. HAND TOOL SURFACE WITH MOLDING PLASTER.

SYMBOLS LEGEND

- EXISTING WALL TO REMAIN
- NEW WALL AS PER WALL TYPE
- EXISTING HISTORIC VAULTED, PLASTER CEILING TO REMAIN UNALTERED. PROTECT DURING CONSTRUCTION
- EXISTING PENDANT LIGHT FIXTURE TO REMAIN AS IS. PROTECT DURING CONSTRUCTION
- EXISTING SPRINKLER HEAD TO REMAIN UNALTERED
- NOT IN THE SCOPE OF WORK

MERIDIEN GROUP

MERIDIEN GROUP, LLC
208 SOUTH KING ST. SUITE 303
LEESBURG, VA 20175
(703) 777-8285
www.meridiengroupllc.com

CITADEL DCA
ARCHITECTURE | HISTORIC PRESERVATION | PLANNING | DESIGN

CERTIFICATIONS

KEY PLAN

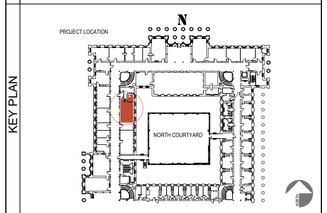

REVISION NOTES

MARK	DATE	DESCRIPTION

GRAPHIC SCALE

1/4" =1'-0"

30" 15" 6" 36" 24" 12" 0 1' 2' 3' 4' 5' 6' 7' 8'

CAUTION: IF THIS DRAWING IS A REDUCTION THIS GRAPHIC SCALE MUST BE USED

CAUTION: IF THIS DRAWING IS A REDUCTION THIS GRAPHIC SCALE MUST BE USED

CONTRACTORS	A/E CON. NO.	
	A/E TASK NO.	
	CONS. CONTR	
	CONS. WORK	
	PRIME A/E	MERIDIEN GROUP / CITADEL DCA
	SUB A/E	
BUILDING	NAME	
	STREET	
	CITY/ST./ZIP	WASHINGTON, DC
	BUILDING NO.	DC-
	OTHER	
	BUILDING NOs.	
	FACILITY CODE	
PROJECT	PROJECT TITLE	FEDERAL OFFICE BUILDING MT 2453 OFFICE RENOVATION
	PROJECT DESCRIPTION	RENOVATION OF SECOND FLOOR SUITE
	PROJECT NO.	MT2453_26_004
	GSA PM	BARBARA CHOATE
	SUBMISSION	100% SUBMISSION FOR REVIEW
	SUB. DATE	28 APRIL 2026
DRAWING	DRAWING TITLE	NEW WORK RCP
	FILE NAME	
	FLOOR NO.	2ND FLOOR
	DRAWN BY	AGF DATE DRAFTED: 04/14/2026
	CHECKED BY	LSP SHEET SIZE: 24 x 36
	DRAWING NO.	A-102

DISCIPLINE	SHEET TYPE	SEQUENCE
SHEET	08 OF	21

GENERAL NOTES

1. CONTRACTOR TO VERIFY EXISTING CONDITIONS BEFORE STARTING. NO FORENSIC DEMOLITION WAS CONDUCTED AT THE TIME OF THE SURVEY. DISCREPANCIES MIGHT BE ENCOUNTERED BETWEEN ACTUAL CONDITIONS AND DRAWINGS. INFORM COR PRIOR TO PROCEEDING w/ WORK
2. IN CASE OF CONFLICTS BETWEEN PLANS, KEY NOTES, SECTIONS, DETAILS AND SPECIFICATIONS, THE MOST STRINGENT REQUIREMENT APPLIES
3. ALL DIMENSIONS ARE GIVEN FROM FINISH WALL OR PARTITION TO FINISH WALL OR PARTITION
4. ALL WORK PROVIDED UNDER THIS CONTRACT SHALL BE NEW UNLESS SPECIFICALLY MARKED "EXISTING," "EXTG", OR "(E)"
5. BEST PRACTICES, METHODS AND MATERIALS, MUST BE FOLLOWED AT ALL TIMES. ANY ITEM NOT SPECIFICALLY LISTED OR SHOWN ON THE CONTRACT DOCUMENTS BUT NECESSARY FOR THE COMPLETION OF THE PROJECT, SHALL BE CONSIDERED PART OF THE CONTRACT'S SCOPE OF WORK
6. THE CONTRACTOR SHALL CLEAN UP ALL ACTIVE WORK AREAS AFTER EACH DAY'S WORK. THE CONTRACTOR IS RESPONSIBLE FOR THE REMOVAL AND PROPER DISPOSAL OF ALL WORK RELATED TRASH AND DEBRIS
7. PROTECT ALL GOVERNMENT PROPERTY ENCOUNTERED AT THE JOB SITE AGAINST DAMAGE. ALL DAMAGES CAUSED BY THE CONTRACTOR SHALL BE REPAIRED OR REPLACED TO MATCH EXISTING AND TO THE SATISFACTION AND APPROVAL OF THE COR
8. AREA OF WORK MUST BE ISOLATED FROM THE REST OF ADJACENT AREAS. PROTECT ALL SURFACES, EQUIPMENT& FURNITURE PRIOR TO START OF WORK.
9. REMOVE ALL HVAC COVERS AS NEEDED. SEAL EXPOSED DUCTS AND VENTS TO PREVENT INTRODUCING DUST INTO THE SYSTEM. (REMOVED COVERS MUST BE REINSTALLED AT END OF THE JOB)
10. PROTECT ALL HISTORIC FABRIC DURING DEMOLITION AND CONSTRUCTION.
11. DO NOT REMOVE HISTORIC FABRIC UNLESS SPECIFICALLY NOTED ON DOCUMENTS. ANY HISTORIC FABRIC REMOVED MUST BE RETURNED TO COR. DO NOT DISPOSE.

KEY NOTES

1. REINSTALL ALTERED FLOOR SYSTEM PANELS AS DEPICTED AT THE COMPLETION OF THE WALL CONSTRUCTION. PANELS MUST BE CLEAN, FREE OF GLUE AND DEBRIS
2. EXISTING FLOOR SYSTEM PANELS WITH POWER AND DATA BOXES TO REMAIN UNALTERED. PROTECT DURING CONSTRUCTION
3. RELOCATED FLOOR SYSTEM PANELS WITH POWER AND DATA BOXES AS DEPICTED.
4. NEW POWER AND DATA BOXES

SYMBOLS LEGEND

- EXISTING WALL TO REMAIN
- NEW WALL AS PER WALL TYPE
- EXISTING DOOR ASSEMBLY WITHIN THE AREA OF WORK TO REMAIN
- EXISTING DOOR ASSEMBLY OUTSIDE THE AREA OF WORK TO REMAIN
- DOOR NUMBER / NEW DOOR ASSEMBLY
- EXISTING IRVINE-TATE CONCORE / ALL STEEL 24"x 24" FLOOR PANEL SYSTEM TO REMAIN
- EXISTING IRVINE-TATE CONCORE / ALL STEEL 24"x 24" FLOOR PANEL AFTER WALL CONSTRUCTION IS COMPLETED
- (E) EXISTING FLOOR BOX TO REMAIN UNALTERED. PROTECT DURING CONSTRUCTION
- RELOCATED EXISTING FLOOR BOX
- NEW FLOOR BOX (POWER / DATA)
- EXISTING FCU AND ASSOCIATED PIPING CABINET TO REMAIN AS IS. PROTECT DURING CONSTRUCTION PRIOR TO REFINISHING
- NOT IN THE SCOPE OF WORK

DUE TO THE PRESENCE OF CARPET, THE FLOOR PANEL SYSTEM HAS NOT BEEN SURVEYED. THESE DRAWINGS REPRESENT ONLY AN APPROXIMATION OF THE EXISTING CONDITIONS, THUS ADJUSTMENTS WILL BE NECESSARY. THE ARCHITECT WILL SURVEY THE FLOOR ONCE CARPET HAS BEEN REMOVE

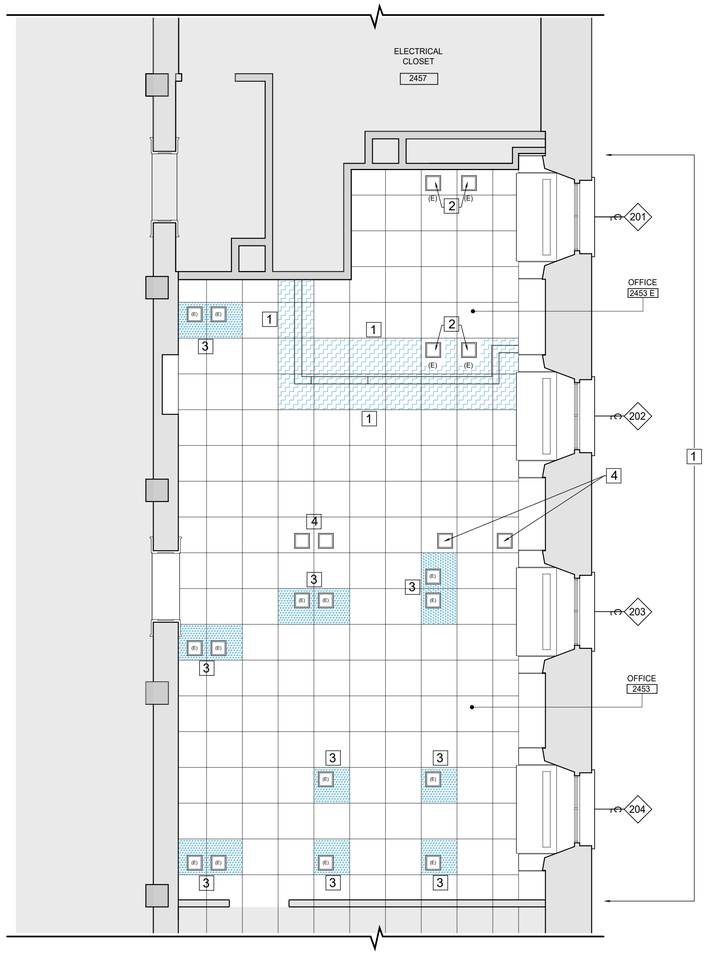

A-1 NEW WORK | FLOOR PANEL SYSTEM
1/4" = 1'-0"

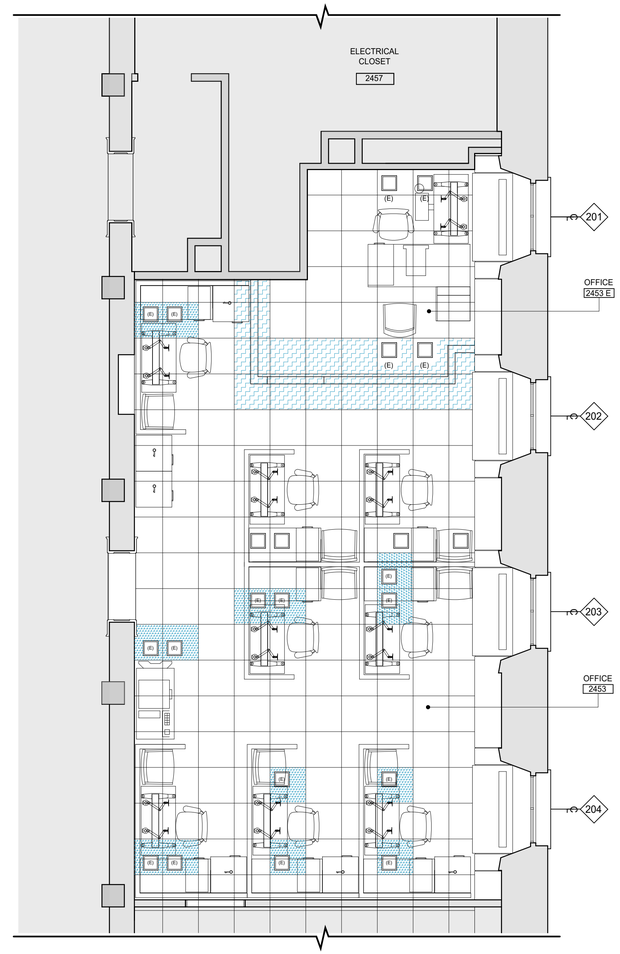

A-3 NEW WORK | FLOOR PANEL SYSTEM WITH NEW FURNITURE
1/4" = 1'-0"

CONCORE / ALL STEEL POSILOCK SYSTEM

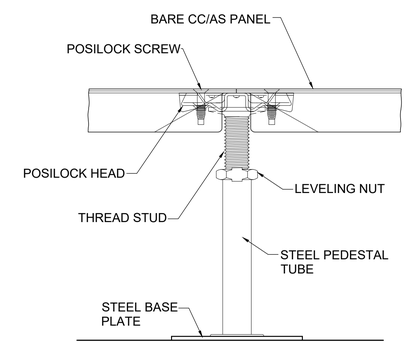

TYPICAL SECTION AT FIELD PANEL
NTS

MERIDIEN GROUP

MERIDIEN GROUP, LLC
208 SOUTH KING ST. SUITE 303
LEESBURG, VA 20175
(703) 777-8285
www.meridiengroupllc.com

DCA CITADEL
ARCHITECTURE | HISTORIC PRESERVATION | PLANNING | DESIGN

CERTIFICATIONS

KEY PLAN

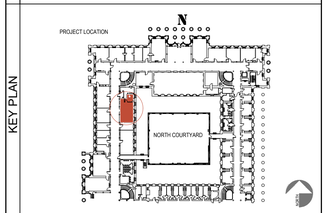

REVISION NOTES

MARK	DATE	DESCRIPTION

GRAPHIC SCALE

1/4" =1'-0"

30" 18" 6" 0 1' 2' 3' 4' 5' 6' 7' 8'
36" 24" 12"

CAUTION: IF THIS DRAWING IS A REDUCTION THIS GRAPHIC SCALE MUST BE USED

CONTRACTORS	A/E CON. NO.	
	A/E TASK NO.	
	CONS. CONTR	
	CONS. WORK	
	PRIME A/E	MERIDIEN GROUP / CITADEL DCA
	SUB A/E	
BUILDING	NAME	
	STREET	
	CITY/ST./ZIP	WASHINGTON, DC
	BUILDING NO.	DC-
	OTHER BUILDING NOs.	
	FACILITY CODE	
PROJECT	PROJECT TITLE	FEDERAL OFFICE BUILDING MT 2453 OFFICE RENOVATION
	PROJECT DESCRIPTION	RENOVATION OF SECOND FLOOR SUITE
	PROJECT NO.	MT2453_26_004
	GSA PM	BARBARA CHOATE
	SUBMISSION	100% SUBMISSION FOR REVIEW
	SUB. DATE	28 APRIL 2026
DRAWING	DRAWING TITLE	NEW WORK
	FILE NAME	
	FLOOR NO.	2ND FLOOR
	DRAWN BY	AGF DATE DRAFTED: 04/14/2026
	CHECKED BY	LSP SHEET SIZE: 24 x 36
	DRAWING NO.	A-103
		DISCIPLINE SHEET TYPE SEQUENCE
		SHEET 09 OF 21

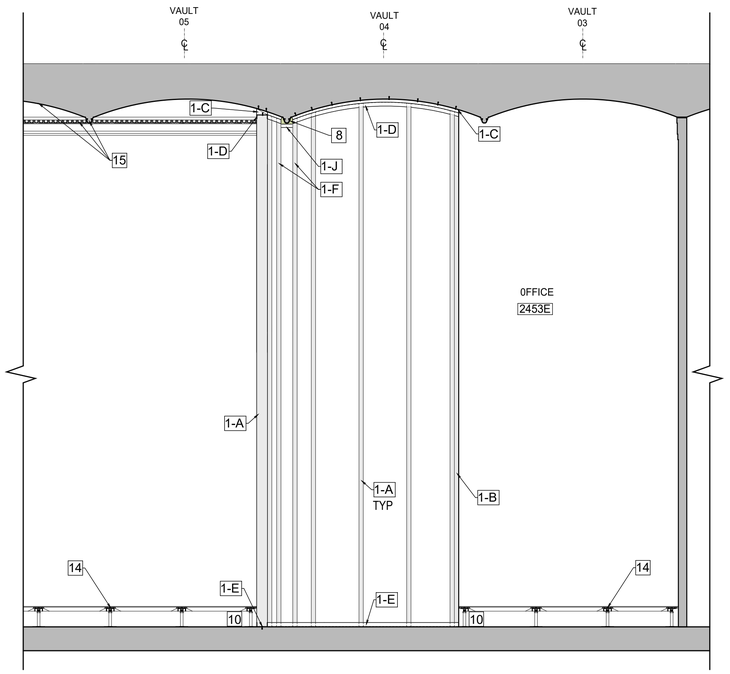

C-1 NEW WORK: WALL FRAMING SECTION 5 - 5 / INTERIOR ELEVATION OF FRAMING 5
1/2" = 1'-0"

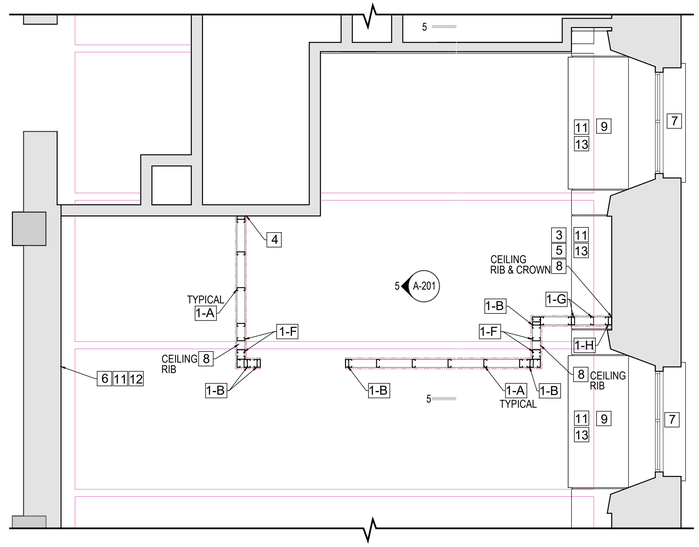

C-3 NEW OFFICE 2453 WALLS FRAMING PLAN
3/8" = 1'-0"

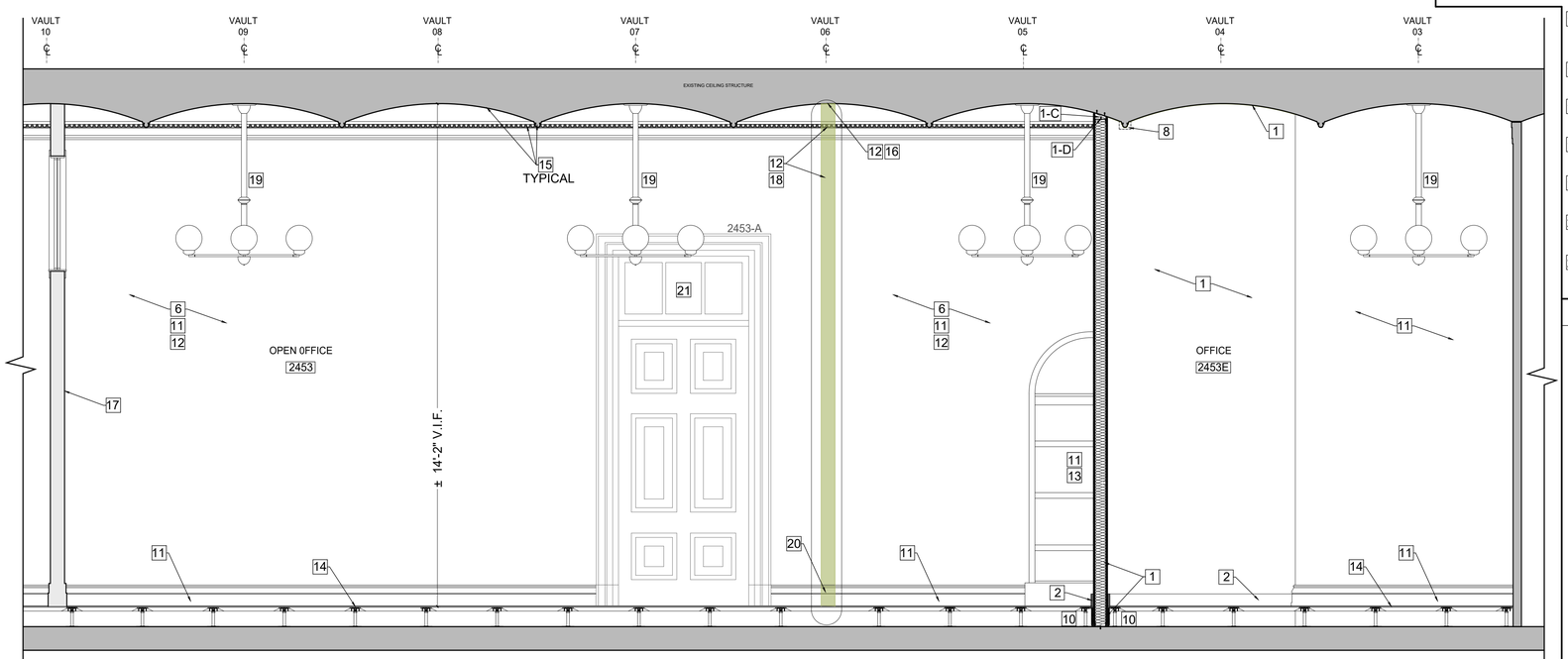

A-1 NEW WORK: SECTION 6 - 6
1/2" = 1'-0"

KEY NOTES

1. NEW 4 7/8" PARTITION (3 5/8" 16 GA STEEL STUDS WITH 5/8" GWB EACH SIDE OF THE WALL & 3 1/2" BATT INSULATION) SECTION UNDER THE FLOOR SYSTEM TO RECEIVE (2) LAYERS OF GWB EACH SIDE. FINISHES AS PER FINISHES SCHEDULE. WALL FRAMING AS FOLLOWS (CONSULT ROOM SECTIONS & WALL TYPES):
   - A - 3 5/8" 16 GA STEEL STUDS @ 16" o.c. FULL HEIGHT FROM TOP OF SLAB TO CEILING VAULT
   - B - (2) 3 5/8" 16 GA STEEL STUDS FASTENED TOGETHER W/ (1) #10-16 TEK SCREW @ 24" o.c.
   - C - 2 X 4 WOOD PLATE ANCHORED TO UNDERSIDE OF VAULTED PLASTER CEILING W/ 1/4"X DEWALT/ POWERS ZAMAC NAILIN ANCHORS @12" O.C CUT PLATE TO CONFORM TO CEILING. PRE-DRILL WHOLES TO AVOID CRACKING HISTORIC PLASTER
   - D - 3 5/8" 14 GA STEEL TRACK FASTENED TO WOOD PLATE. TRACK CAN BE INSTALLED DIRECTLY ON TO PLASTER CEILING WITHOUT THE WOOD PLATE. USE W/ 1/4"X DEWALT/ POWERS ZAMAC NAILIN ANCHORS @12" O.C. PRE-DRILL WHOLES TO AVOID CRACKING HISTORIC PLASTER
   - E - 3 5/8" 14 GA STEEL CONTINUOUS RUNNER ANCHORED TO SLAB W/ TAPCON FASTENERS. FASTENERS TO BE AS FOLLOWS: ASTM C1513, CORROSION- RESISTANT- COATED, SELF-DRILLING, & SELF-TAPPING DRILL SCREWS.
   - F - (1) 3 5/8" 16 GA STEEL STUD AT EACH SIDE OF THE PLATE BRIDGING THE EXISTING VAULT RIB. FRAMING MUST BE KEPT AWAY FROM HISTORIC COMPONENT.
   - G - 3 5/8" 16 GA STEEL STUDS FROM TOP OF THE FCU CABINET TO CEILING VAULT
   - H - (2) 3 5/8" 16 GA STEEL STUDS FASTENED TOGETHER W/ (1) #10-16 TEK SCREW @ 24" O.C. FROM TOP OF THE FCU CABINET TO CEILING VAULT
   - J - 3 5/8" 16 GA STEEL TRACK BRIDGING BENEATH RIB MOLDING ATTACHED TO STUDS AS DESCRIBED IN 1F

   FRAME AROUND EXISTING HISTORIC PLASTER CEILING RIB MOLDING. NEW DRYWALL TO BE SCRIBED TO HISTORIC CROWN MOLDING, VAULTED CEILING AND RIBS, THE GAP MUST BE CAULKED. DO NOT CUT PLASTER MOLDING UNDER ANY CIRCUMSTANCE.
2. NEW PARTITION TO RECEIVE ¾" THICK STRAIGHT BASEBOARD (PAINTED) TO MATCH THE HEIGHT OF THE FIRST STEP OF THE EXISTING, ORIGINAL BASEBOARD ON BOTH SIDES
3. EXISTING MILLWORK TO REMAIN UNALTERED. PROTECT DURING CONSTRUCTION. FRAME NEW PARTITION AROUND THE MILLWORK AS PER SECTION AND FRAMING PLAN. DO NOT ALTER MILLWORK. REFINISH IN KIND AS PER FINISHES SCHEDULE
4. REMOVE PORTION OF EXISTING NOT ORIGINAL BASEBOARD AS NEEDED TO INSTALL NEW PARTITION
5. WHERE THE NEW PARTITION IS ATTACHED TO EXISTING EXTERIOR MASONRY & PLASTER WALL INSTALL A MOISTURE BARRIER THE WIDTH OF THE STUDS FULL HEIGHT
6. EXISTING ORIGINAL MASONRY WALL AND BASEBOARD TO REMAIN UNALTERED. PROTECT DURING CONSTRUCTION
7. EXISTING WINDOW WITH ORIGINAL CAST IRON SURROUND TO REMAIN UNALTERED. PROTECT DURING CONSTRUCTION. REFINISH CAST IRON SURROUND, JAMBS AND SILL AS PER FINISHES SCHEDULE (IN KIND). WINDOW SASHES TO BE CLEANED AT THE CONCLUSION OF THE WORK. REINSTALL WINDOW BLINDS IF THEY WERE REMOVED
8. HISTORIC CROWN MOLDING AND CEILING RIB MOLDINGS TO REMAIN. NEW PARTITIONS SHOULD BE BUILD AS PER WALL SECTIONS TO AVOID DAMAGING THE HISTORIC ELEMENTS. HISTORIC PLASTER MOLDINGS MUST NOT BE CUT OR ALTERED IN ANY MANNER
9. EXISTING FCU TO REMAIN. COVER DURING CONSTRUCTION TO PREVENT DUST FROM ENTERING THE VENTS. REFINISH MILLWORK WITHIN ROOM 2453-D AS PER FINISHES SCHEDULE (IN KIND)
10. REINSTALLED ALTERED FLOOR SYSTEM PANELS AFTER THE NEW WALL IS CONSTRUCTED
11. PATCH AND PREP ENTIRE SPACE FOR NEW PAINT, ALL ELEMENTS THAT ARE CURRENTLY PAINTED INCLUDED: WALLS, CEILING & CROWN MOLDING (SEE KEY NOTE 16), BASEBOARD (ORIGINAL AND NEW), FCU CABINETS, WINDOWS, DOORS AND NICHE. PREP AND REFINISH ALL COMPONENTS AS PER FINISHES SCHEDULE
12. FOR PLASTER REPAIRS, FOLLOW RESTORATION GUIDELINES INCLUDED UNDER THE HEADING "PLASTER REPAIRS AND RESTORATION METHODS AND MATERIALS" ON A-102. DO NOT USE JOINT OR SPACKLING COMPOUND.
13. DO NOT USE WOOD FILLERS NOT LABELED FOR THAT PURPOSE TO REPAIR HISTORIC AND NON-HISTORIC ELEMENTS
14. EXISTING FLOOR PANEL SYSTEM TO REMAIN UNALTERED (EXCEPT WHERE NOTED) CLEAN FLOOR PANELS AND REMOVE ALL GLUE AND DEBRIS PRIOR TO INSTALLING NEW CARPET TILE AS PER FINISHES SCHEDULE. FOLLOW THE MANUFACTURER SPECIFICATIONS FOR CARPET INSTALLATION
15. PLASTER VAULTED CEILING AND CROW MOLDING TO REMAIN UNALTERED. PROTECT DURING CONSTRUCTION. THE MAJORITY OF THE CEILING IS NOT TO BE REFINISHED EXCEPT FOR AREAS AS STATED IN KEY NOTE 16
16. PREP AND FINISH ALL CEILING AREAS AFFECTED BY THE WALL DEMOLITION AND ANY AREAS WHERE THE EXISTING FINISH IS FAILING
17. EXISTING NON-ORIGINAL PARTITION W/ BASEBOARD AND CLERESTORY WINDOWS TO REMAIN. PREPARE TO BE REFINISHED
18. EXISTING WALL SURFACE AND CROWN MOLDING AFFECTED BY THE REMOVAL OF THE PARTITION TO BE RESTORED AS NEEDED
19. EXISTING LIGHT FIXTURES AND FIRE SUPPRESSION SYSTEM TO REMAIN UNALTERED. PROTECT DURING CONSTRUCTION AND CLEAN AT ITS CONCLUSION
20. EXISTING BASEBOARD AFFECTED BY THE REMOVAL OF THE PARTITION TO BE RESTORED AS NEEDED
21. EXISTING DOORS TO BE PROTECTED DURING CONSTRUCTION AND CLEANED AT ITS CONCLUSION

LEGEND

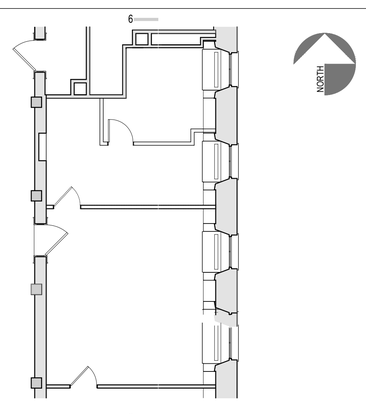

MERIDIEN GROUP

MERIDIEN GROUP, LLC
208 SOUTH KING ST. SUITE 303
LEESBURG, VA 20175
(703) 777-8285
www.meridiengroupllc.com

CITADEL
ARCHITECTURE | HISTORIC PRESERVATION | PLANNING | DESIGN

CERTIFICATIONS

KEY PLAN

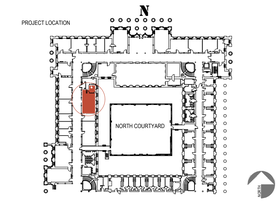

REVISION NOTES

MARK	DATE	DESCRIPTION

GRAPHIC SCALE

1/2" = 1' - 0"

15" 9" 3" 18" 12" 6" 0 1' 2' 3' 4'

CAUTION: IF THIS DRAWING IS A REDUCTION THIS GRAPHIC SCALE MUST BE USED

CONTRACTORS	
A/E CON. NO.CAUTION: IF THIS DRAWING IS A REDUCTION THIS GRAPHIC SCALE MUST BE USED	
A/E TASK NO.	
CONS. CONTR	
CONS. WORK	
PRIME A/E	MERIDIEN GROUP / CITADEL DCA
SUB A/E	
BUILDING	
NAME	
STREET	
CITY/ST./ZIP	WASHINGTON, DC
BUILDING NO.	DC-
OTHER	
BUILDING NOs.	
FACILITY CODE	
PROJECT	
PROJECT TITLE	FEDERAL OFFICE BUILDING MT 2453 OFFICE RENOVATION
PROJECT DESCRIPTION	RENOVATION OF SECOND FLOOR SUITE
PROJECT NO.	MT2453_26_004
GSA PM	BARBARA CHOATE
SUBMISSION	100% SUBMISSION FOR REVIEW
SUB. DATE	28 APRIL 2026
DRAWING	
DRAWING TITLE	NEW FRAMING SECTIONS AND ELEVATIONS
FILE NAME	
FLOOR NO.	2ND FLOOR
DRAWN BY	AGF DATE DRAFTED: 04/14/2026
CHECKED BY	LSP SHEET SIZE: 24 x 36
DRAWING NO.	A-201
DISCIPLINE	SHEET TYPE SEQUENCE
SHEET	10 OF 21

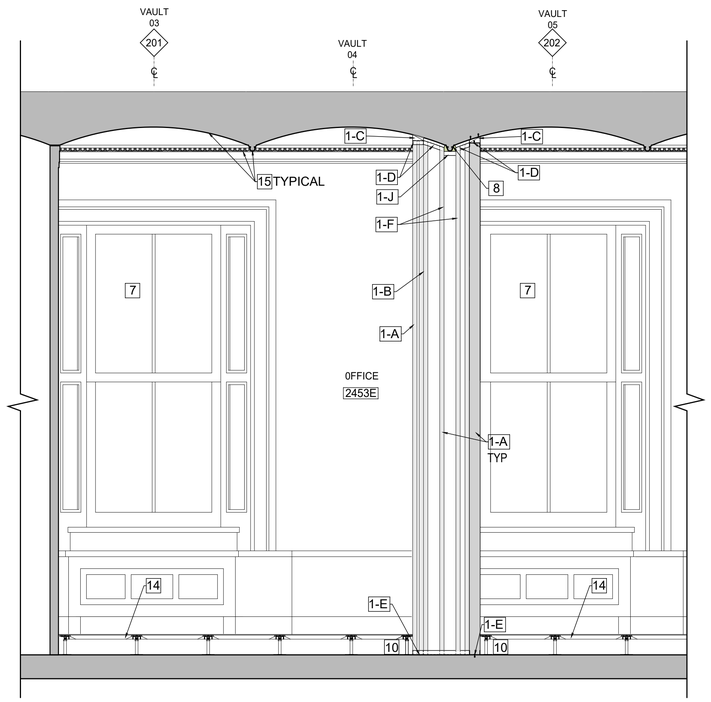

C-1 NEW WORK: WALL FRAMING SECTION 7 - 7 / INTERIOR ELEVATION OF FRAMING 7
1/2" = 1'-0"

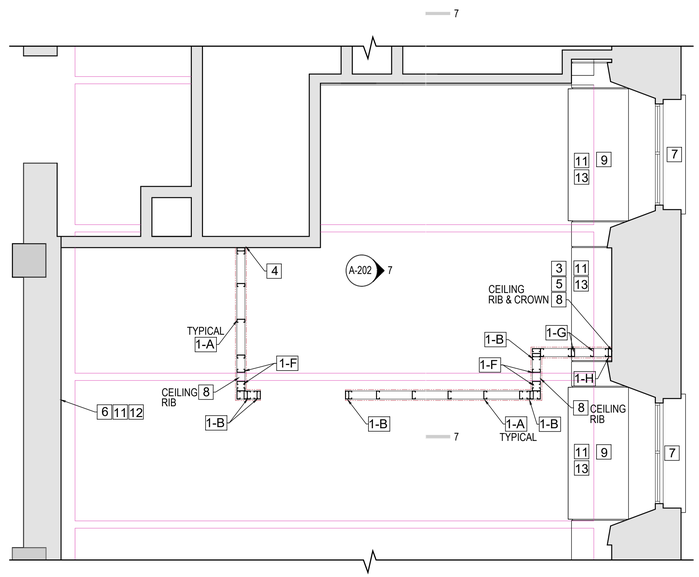

C-2 NEW OFFICE 2453 WALLS FRAMING PLAN
3/8" = 1'-0"

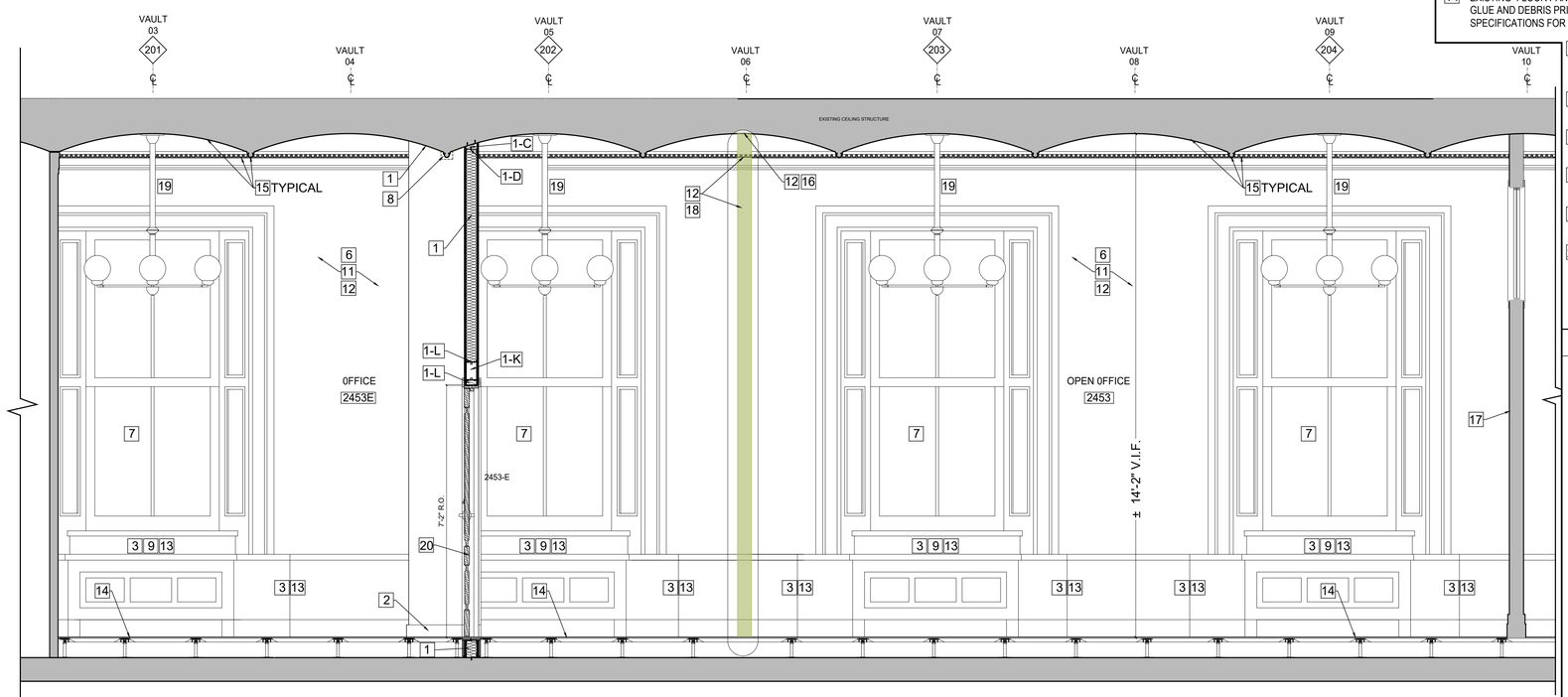

A-1 NEW WORK: SECTION 8 - 8
1/2" = 1'-0"

KEY NOTES

1. NEW 4 7/8" PARTITION (3 5/8" 16 GA STEEL STUDS WITH 5/8" GWB EACH SIDE OF THE WALL & 3 1/2" BATT INSULATION) SECTION UNDER THE FLOOR SYSTEM TO RECEIVE (2) LAYERS OF GWB EACH SIDE. FINISHES AS PER FINISHES SCHEDULE. WALL FRAMING AS FOLLOWS (CONSULT ROOM SECTIONS & WALL TYPES):

   A - 3 5/8" 16 GA STEEL STUDS @ 16" o.c. FULL HEIGHT FROM TOP OF SLAB TO CEILING VAULT
   B - (2) 3 5/8" 16 GA STEEL STUDS FASTENED TOGETHER W/ (1) #10-16 TEK SCREW @ 24" o.c.
   C - 2 X 4 WOOD PLATE ANCHORED TO UNDERSIDE OF VAULTED PLASTER CEILING W/ 1/4"X DEWALT/ POWERS ZAMAC NAILIN ANCHORS @12" O.C CUT PLATE TO CONFORM TO CEILING. PRE-DRILL WHOLES TO AVOID CRACKING HISTORIC PLASTER
   D - 3 5/8" 14 GA STEEL TRACK FASTENED TO WOOD PLATE. TRACK CAN BE INSTALLED DIRECTLY ON TO PLASTER CEILING WITHOUT THE WOOD PLATE. USE W/ 1/4"X DEWALT/ POWERS ZAMAC NAILIN ANCHORS @12" O.C. PRE-DRILL WHOLES TO AVOID CRACKING HISTORIC PLASTER
   E - 3 5/8" 14 GA STEEL CONTINUOUS RUNNER ANCHORED TO SLAB W/ TAPCON FASTENERS. FASTENERS TO BE AS FOLLOWS: ASTM C1513, CORROSION- RESISTANT- COATED, SELF-DRILLING, & SELF-TAPPING DRILL SCREWS.
   F - (1) 3 5/8" 16 GA STEEL STUD AT EACH SIDE OF THE PLATE BRIDGING THE EXISTING VAULT RIB. FRAMING MUST BE KEPT AWAY FROM HISTORIC COMPONENT.
   G - 3 5/8" 16 GA STEEL STUDS FROM TOP OF THE FCU CABINET TO CEILING VAULT
   H - (2) 3 5/8" 16 GA STEEL STUDS FASTENED TOGETHER W/ (1) #10-16 TEK SCREW @ 24" O.C. FROM TOP OF THE FCU CABINET TO CEILING VAULT
   J - 3 5/8" 16 GA STEEL TRACK BRIDGING BENEATH RIB MOLDING ATTACHED TO STUDS AS DESCRIBED IN 1F
   K - (2) 8" 14 GA CONTINUOUS HEADER
   L - 3 5/8" 14 GA HEADER TRACK. ABOVE FRAME INSERT A PT PLATE (WOOD BLOCKING) TO FASTEN DOOR FRAME

   FRAME AROUND EXISTING HISTORIC PLASTER CEILING RIB MOLDING. NEW DRYWALL TO BE SCRIBED TO HISTORIC CROWN MOLDING, VAULTED CEILING AND RIBS, THE GAP MUST BE CAULKED. NEVER CUT PLASTER MOLDING

2. NEW PARTITION TO RECEIVE $\frac{3}{4}$" THICK STRAIGHT BASEBOARD (PAINTED) TO MATCH THE HEIGHT OF THE FIRST STEP OF THE EXISTING, ORIGINAL BASEBOARD ON BOTH SIDES
3. EXISTING MILLWORK TO REMAIN UNALTERED. PROTECT DURING CONSTRUCTION. FRAME NEW PARTITION AROUND THE MILLWORK AS PER SECTION AND FRAMING PLAN. DO NOT ALTER MILLWORK. REFINISH IN KIND AS PER FINISHES SCHEDULE
4. REMOVE PORTION OF EXISTING NOT ORIGINAL BASEBOARD AS NEEDED TO INSTALL NEW PARTITION
5. WHERE THE NEW PARTITION IS ATTACHED TO EXISTING EXTERIOR MASONRY & PLASTER WALL INSTALL A MOISTURE BARRIER THE WIDTH OF THE STUDS FULL HEIGHT
6. EXISTING ORIGINAL MASONRY WALL AND BASEBOARD TO REMAIN UNALTERED. PROTECT DURING CONSTRUCTION
7. EXISTING WINDOW WITH ORIGINAL CAST IRON SURROUND TO REMAIN UNALTERED. PROTECT DURING CONSTRUCTION. REFINISH CAST IRON SURROUND, JAMBS AND SILL AS PER FINISHES SCHEDULE (IN KIND). WINDOW SASHES TO BE CLEANED AT THE CONCLUSION OF THE WORK. REINSTALL WINDOW BLINDS IF THEY WERE REMOVED
8. HISTORIC CROWN MOLDING AND CEILING RIB MOLDINGS TO REMAIN. NEW PARTITIONS SHOULD BE BUILD AS PER WALL SECTIONS TO AVOID DAMAGING THE HISTORIC ELEMENTS. NEVER ALTER OR CUT THE HISTORIC PLASTER MOLDINGS
9. EXISTING FCU TO REMAIN. COVER DURING CONSTRUCTION TO PREVENT DUST FROM ENTERING THE VENTS. REFINISH MILLWORK WITHIN ROOM 2453-D AS PER FINISHES SCHEDULE (IN KIND)
10. REINSTALLED ALTERED FLOOR SYSTEM PANELS AFTER THE NEW WALL IS CONSTRUCTED
11. PATCH AND PREP ENTIRE SPACE FOR NEW PAINT, ALL ELEMENTS THAT ARE CURRENTLY PAINTED INCLUDED: WALLS, CEILING & CROWN MOLDING (SEE KEY NOTE 16), BASEBOARD (ORIGINAL AND NEW), FCU CABINETS, WINDOWS, DOORS AND NICHE. PREP AND REFINISH ALL COMPONENTS AS PER FINISHES SCHEDULE
12. FOR PLASTER REPAIRS, FOLLOW RESTORATION GUIDELINES INCLUDED UNDER THE HEADING "PLASTER REPAIRS AND RESTORATION METHODS AND MATERIALS" ON A-102. DO NOT USE JOINT OR SPACKLING COMPOUND.
13. DO NOT USE WOOD FILLERS NOT LABELED FOR THAT PURPOSE TO REPAIR HISTORIC AND NON-HISTORIC ELEMENTS
14. EXISTING FLOOR PANEL SYSTEM TO REMAIN UNALTERED (EXCEPT WHERE NOTED) CLEAN FLOOR PANELS AND REMOVE ALL GLUE AND DEBRIS PRIOR TO INSTALLING NEW CARPET TILE AS PER FINISHES SCHEDULE. FOLLOW THE MANUFACTURER SPECIFICATIONS FOR CARPET INSTALLATION
15. PLASTER VAULTED CEILING AND CROW MOLDING TO REMAIN UNALTERED. PROTECT DURING CONSTRUCTION. THE MAJORITY OF THE CEILING IS NOT TO BE REFINISHED EXCEPT FOR AREAS AS STATED IN KEY NOTE 16
16. PREP AND FINISH ALL CEILING AREAS AFFECTED BY THE WALL DEMOLITION AND ANY AREAS WHERE THE EXISTING FINISH IS FAILING
17. EXISTING NON-ORIGINAL PARTITION W/ BASEBOARD AND CLERESTORY WINDOWS TO REMAIN. PREPARE TO BE REFINISHED
18. EXISTING WALL SURFACE AND CROWN MOLDING AFFECTED BY THE REMOVAL OF THE PARTITION TO BE RESTORED AS NEEDED
19. EXISTING LIGHT FIXTURES AND FIRE SUPPRESSION SYSTEM TO REMAIN UNALTERED. PROTECT DURING CONSTRUCTION AND CLEAN AT ITS CONCLUSION
20. NEW DOOR ASSEMBLY CONSISTING OF A 2-PANEL DOOR LEAF & FLAT CASING PAINTED TO MATCH EXACTLY EXISTING DOOR ASSEMBLY 2453-E (HEIGHT, PROFILE AND WIDTH OF CASING) HARDWARE WILL DIFFER TO COMPLY WITH ABA. SEE PERTINENT SCHEDULES. NOTE: IF EXISTING DOOR 2453 E IS USABLE AND IT IS APPROVED BY TREASURY'S COR, REINSTALL ONLY EXISTING LEAF AND FRAME. INSTALL NEW HARDWARE AS PER SCHEDULE AND CASING

LEGEND

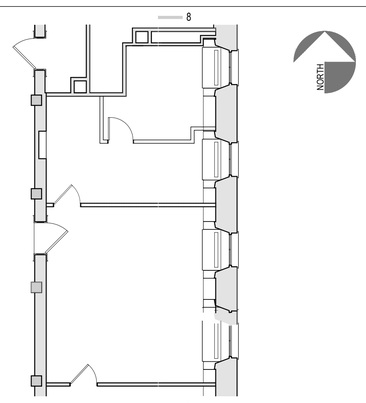

MERIDIEN GROUP

MERIDIEN GROUP, LLC
208 SOUTH KING ST. SUITE 303
LEESBURG, VA 20175
(703) 777-8285
www.meridiengroupllc.com

DCA CITADEL
ARCHITECTURE | HISTORIC PRESERVATION | PLANNING | DESIGN

CERTIFICATIONS

KEY PLAN

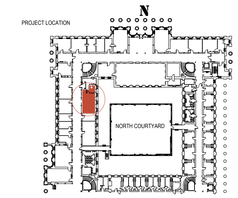

REVISION NOTES

MARK	DATE	DESCRIPTION

GRAPHIC SCALE

1/2" = 1' - 0"

15" 9" 3" 18" 12" 6" 0 1' 2' 3' 4'

CAUTION: IF THIS DRAWING IS A REDUCTION THIS GRAPHIC SCALE MUST BE USED

CAUTION: IF THIS DRAWING IS A REDUCTION THIS GRAPHIC SCALE MUST BE USED

CONTRACTORS	A/E CON. NO.	
	A/E TASK NO.	
	CONS. CONTR	
	CONS. WORK	
	PRIME A/E	MERIDIEN GROUP / CITADEL DCA
	SUB A/E	
BUILDING	NAME	
	STREET	
	CITY/ST./ZIP	WASHINGTON, DC
	BUILDING NO.	DC-
	OTHER	
	BUILDING NOs.	
	FACILITY CODE	
PROJECT	PROJECT TITLE	FEDERAL OFFICE BUILDING MT 2453 OFFICE RENOVATION
	PROJECT DESCRIPTION	RENOVATION OF SECOND FLOOR SUITE
	PROJECT NO.	MT2453_26_004
	GSA PM	BARBARA CHOATE
	SUBMISSION	100% SUBMISSION FOR REVIEW
	SUB. DATE	28 APRIL 2026
DRAWING	DRAWING TITLE	NEW FRAMING SECTIONS AND ELEVATIONS
	FILE NAME	
	FLOOR NO.	2ND FLOOR
	DRAWN BY	AGF DATE DRAFTED: 04/14/2026
	CHECKED BY	LSP SHEET SIZE: 24 x 36
	DRAWING NO.	A-202
		DISCIPLINE SHEET TYPE SEQUENCE
		SHEET 11 OF 21

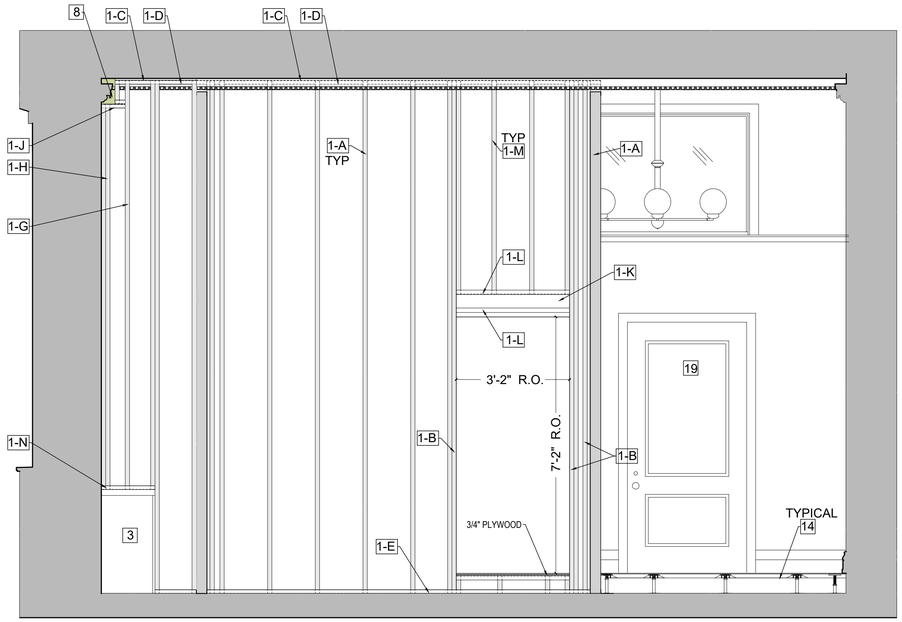

C-1 NEW WORK: WALL FRAMING / INTERIOR ELEVATION OF FRAMING 9
1/2" = 1'-0"

KEY NOTES

1. NEW 4 7/8" PARTITION (3 5/8" 16 GA STEEL STUDS WITH 5/8" GWB EACH SIDE OF THE WALL & 3 1/2" BATT INSULATION) SECTION UNDER THE FLOOR SYSTEM TO RECEIVE (2) LAYERS OF GWB EACH SIDE. FINISHES AS PER FINISHES SCHEDULE. WALL FRAMING AS FOLLOWS (CONSULT ROOM SECTIONS & WALL TYPES):

   A - 3 5/8" 16 GA STEEL STUDS @ 16" o.c. FULL HEIGHT FROM TOP OF SLAB TO CEILING VAULT
   B - (2) 3 5/8" 16 GA STEEL STUDS FASTENED TOGETHER W/ (1) #10-16 TEK SCREW @ 24" o.c.
   C - 2 X 4 WOOD PLATE ANCHORED TO UNDERSIDE OF VAULTED PLASTER CEILING W/ 1/4"X DEWALT/ POWERS ZAMAC NAILIN ANCHORS @12" O.C CUT PLATE TO CONFORM TO CEILING. PRE-DRILL WHOLES TO AVOID CRACKING HISTORIC PLASTER
   D - 3 5/8" 14 GA STEEL TRACK FASTENED TO WOOD PLATE. TRACK CAN BE INSTALLED DIRECTLY ON TO PLASTER CEILING WITHOUT THE WOOD PLATE. USE W/ 1/4"X DEWALT/ POWERS ZAMAC NAILI ANCHORS @12" O.C. PRE-DRILL WHOLES TO AVOID CRACKING HISTORIC PLASTER
   E - 3 5/8" 14 GA STEEL CONTINUOUS RUNNER ANCHORED TO SLAB W/ TAPCON FASTENERS. FASTENERS TO BE ASTM C1513, CORROSION- RESISTANT- COATED, SELF-DRILLING, & SELF-TAPPING DRILL SCREWS
   F - (1) 3 5/8" 16 GA STEEL STUD AT EACH SIDE OF THE PLATE BRIDGING THE EXISTING VAULT RIB. FRAMING MUST BE KEPT AWAY FROM HISTORIC COMPONENT.
   G - 3 5/8" 16 GA STEEL STUDS FROM TOP OF THE FCU CABINET TO CEILING VAULT
   H - (2) 3 5/8" 16 GA STEEL STUDS FASTENED TOGETHER W/ (1) #10-16 TEK SCREW @ 24" O.C. FROM TOP OF THE FCU CABINET TO CEILING VAULT
   J - 3 5/8" 16 GA STEEL TRACK BRIDGING BENEATH RIB MOLDING ATTACHED TO STUDS AS DESCRIBED IN 1F
   K - (2) 8" 14 GA CONTINUOUS HEADER
   L - 3 5/8" 14 GA HEADER TRACK ABOVE AND BELOW HEADER. ABOVE FRAME INSERT PT WOOD BLOCKING TO FASTEN DOOR FRAME
   M - 3 5/8" 16 GA STEEL STUDS FROM TOP OF THE DOOR HEADER TO CEILING VAULT
   N - 3 5/8" 14 GA TRACK ATTACHED TO MILLWORK CABINET W/ WOOD SCREWS

   FRAME AROUND EXISTING HISTORIC PLASTER CEILING RIB MOLDING. NEW DRYWALL TO BE SCRIBED TO HISTORIC CROWN MOLDING, VAULTED CEILING AND RIBS, THE GAP MUST BE CAULKED. NEVER CUT PLASTER MOLDING

2. NEW PARTITION TO RECEIVE $\frac{3}{4}$" THICK STRAIGHT BASEBOARD (PAINTED) TO MATCH THE HEIGHT OF THE FIRST STEP OF THE EXISTING, ORIGINAL BASEBOARD ON BOTH SIDES
3. EXISTING MILLWORK TO REMAIN UNALTERED. PROTECT DURING CONSTRUCTION. FRAME NEW PARTITION AROUND THE MILLWORK AS PER SECTION AND FRAMING PLAN. DO NOT ALTER MILLWORK. REFINISH IN KIND AS PER FINISHES SCHEDULE
4. REMOVE PORTION OF EXISTING NOT ORIGINAL BASEBOARD AS NEEDED TO INSTALL NEW PARTITION
5. WHERE THE NEW PARTITION IS ATTACHED TO EXISTING EXTERIOR MASONRY & PLASTER WALL INSTALL A MOISTURE BARRIER THE WIDTH OF THE STUDS FULL HEIGHT
6. EXISTING ORIGINAL MASONRY WALL AND BASEBOARD TO REMAIN UNALTERED. PROTECT DURING CONSTRUCTION
7. EXISTING WINDOW WITH ORIGINAL CAST IRON SURROUND TO REMAIN UNALTERED. PROTECT DURING CONSTRUCTION. REFINISH CAST IRON SURROUND, JAMBS AND SILL AS PER FINISHES SCHEDULE (IN KIND). WINDOW SASHES TO BE CLEANED AT THE CONCLUSION OF THE WORK. REINSTALL WINDOW BLINDS IF THEY WERE REMOVED
8. HISTORIC CROWN MOLDING AND CEILING RIB MOLDINGS TO REMAIN. NEW PARTITIONS SHOULD BE BUILD AS PER WALL SECTIONS TO AVOID DAMAGING THE HISTORIC ELEMENTS. NEVER ALTER OR CUT THE HISTORIC PLASTER MOLDINGS
9. EXISTING FCU TO REMAIN. COVER DURING CONSTRUCTION TO PREVENT DUST FROM ENTERING THE VENTS. REFINISH MILLWORK WITHIN ROOM 2453-D AS PER FINISHES SCHEDULE (IN KIND)
10. REINSTALLED ALTERED FLOOR SYSTEM PANELS AFTER THE NEW WALL IS CONSTRUCTED
11. PATCH AND PREP ENTIRE SPACE FOR NEW PAINT, ALL ELEMENTS THAT ARE CURRENTLY PAINTED INCLUDED: WALLS, CEILING & CROWN MOLDING (SEE KEY NOTE 16), BASEBOARD (ORIGINAL AND NEW), FCU CABINETS, WINDOWS, DOORS AND NICHE. PREP AND REFINISH ALL COMPONENTS AS PER FINISHES SCHEDULE
12. FOR PLASTER REPAIRS, FOLLOW RESTORATION GUIDELINES INCLUDED UNDER THE HEADING "PLASTER REPAIRS AND RESTORATION METHODS AND MATERIALS" ON A-102. DO NOT USE JOINT OR SPACKLING COMPOUND.
13. DO NOT USE WOOD FILLERS NOT LABELED FOR THAT PURPOSE TO REPAIR HISTORIC AND NON-HISTORIC ELEMENTS
14. EXISTING FLOOR PANEL SYSTEM TO REMAIN UNALTERED (EXCEPT WHERE NOTED) CLEAN FLOOR PANELS AND REMOVE ALL GLUE AND DEBRIS PRIOR TO INSTALLING NEW CARPET TILE AS PER FINISHES SCHEDULE. FOLLOW THE MANUFACTURER SPECIFICATIONS FOR CARPET INSTALLATION
15. PLASTER VAULTED CEILING AND CROW MOLDING TO REMAIN UNALTERED. PROTECT DURING CONSTRUCTION. THE MAJORITY OF THE CEILING IS NOT TO BE REFINISHED EXCEPT FOR AREAS AFFECTED BY THE WALL DEMOLITION AND ANY AREAS WHERE THE EXISTING FINISH IS FAILING
16. EXISTING NON-ORIGINAL PARTITION W/ BASEBOARD AND CLERESTORY WINDOWS TO REMAIN. PREPARE TO BE REFINISHED
17. EXISTING LIGHT FIXTURES AND FIRE SUPPRESSION SYSTEM TO REMAIN UNALTERED. PROTECT DURING CONSTRUCTION AND CLEAN AT ITS CONCLUSION
18. NEW DOOR ASSEMBLY CONSISTING OF A 2-PANEL DOOR LEAF & FLAT CASING PAINTED TO MATCH EXACTLY EXISTING DOOR ASSEMBLY 2453-E (HEIGHT, PROFILE AND WIDTH OF CASING) HARDWARE WILL DIFFER TO COMPLY WITH ABA. SEE PERTINENT SCHEDULES. NOTE: IF EXISTING DOOR 2453 E IS USABLE AND IT IS APPROVED BY TREASURY'S COR, REINSTALL ONLY EXISTING LEAF AND FRAME. INSTALL NEW HARDWARE AS PER SCHEDULE AND CASING
19. EXISTING DOOR ASSEMBLY TO REMAIN UNALTERED, REFINISH IN KIND AS PER FINISHES SCHEDULE

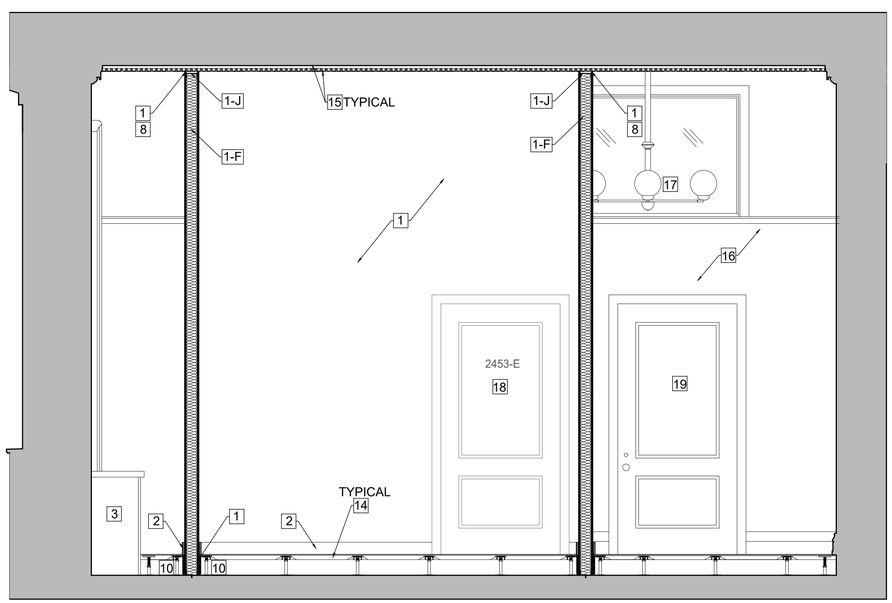

A-1 NEW WORK: SECTION 9 - 9
1/2" = 1'-0"

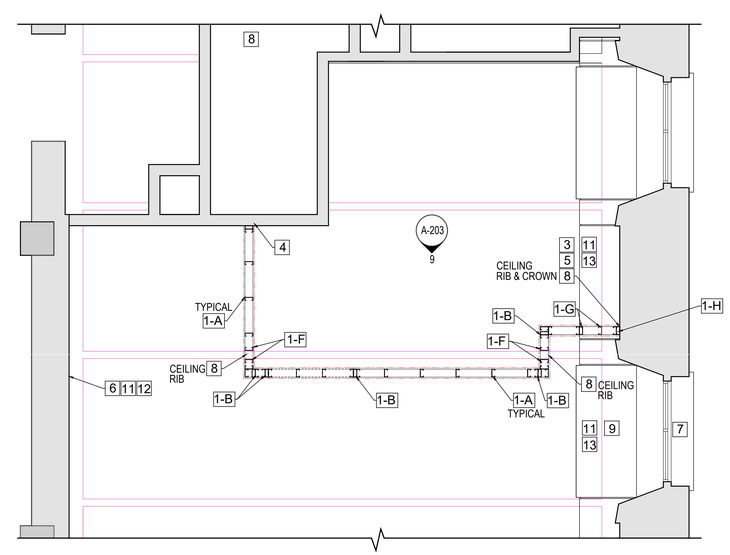

A-3 NEW OFFICE 2453 WALLS FRAMING PLAN
3/8" = 1'-0"

NORTH

MERIDIEN GROUP

MERIDIEN GROUP, LLC
208 SOUTH KING ST. SUITE 303
LEESBURG, VA 20175
(703) 777-8285
www.meridiengroupllc.com

CITADEL
ARCHITECTURE | HISTORIC PRESERVATION | PLANNING | DESIGN

CERTIFICATIONS

KEY PLAN

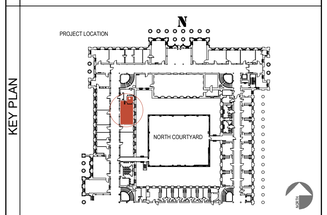

REVISION NOTES

MARK	DATE	DESCRIPTION

GRAPHIC SCALE

1/2" = 1' - 0"

CAUTION: IF THIS DRAWING IS A REDUCTION THIS GRAPHIC SCALE MUST BE USED

CONTRACTORS	A/E CON. NO.	
	A/E TASK NO.	
	CONS. CONTR	
	CONS. WORK	
	PRIME A/E	MERIDIEN GROUP / CITADEL DCA
	SUB A/E	
BUILDING	NAME	
	STREET	
	CITY/ST./ZIP	WASHINGTON, DC
	BUILDING NO.	DC-
	OTHER	
	BUILDING NOs.	
	FACILITY CODE	
PROJECT	PROJECT TITLE	FEDERAL OFFICE BUILDING MT 2453 OFFICE RENOVATION
	PROJECT DESCRIPTION	RENOVATION OF SECOND FLOOR SUITE
	PROJECT NO.	MT2453_26_004
	GSA PM	BARBARA CHOATE
	SUBMISSION	100% SUBMISSION FOR REVIEW
	SUB. DATE	28 APRIL 2026
DRAWING	DRAWING TITLE	NEW FRAMING SECTIONS AND ELEVATIONS
	FILE NAME	
	FLOOR NO.	2ND FLOOR
	DRAWN BY	AGF DATE DRAFTED: 04/14/2026
	CHECKED BY	LSP SHEET SIZE: 24 x 36
	DRAWING NO.	A-203
		DISCIPLINE / SHEET TYPE / SEQUENCE
		SHEET 12 OF 21

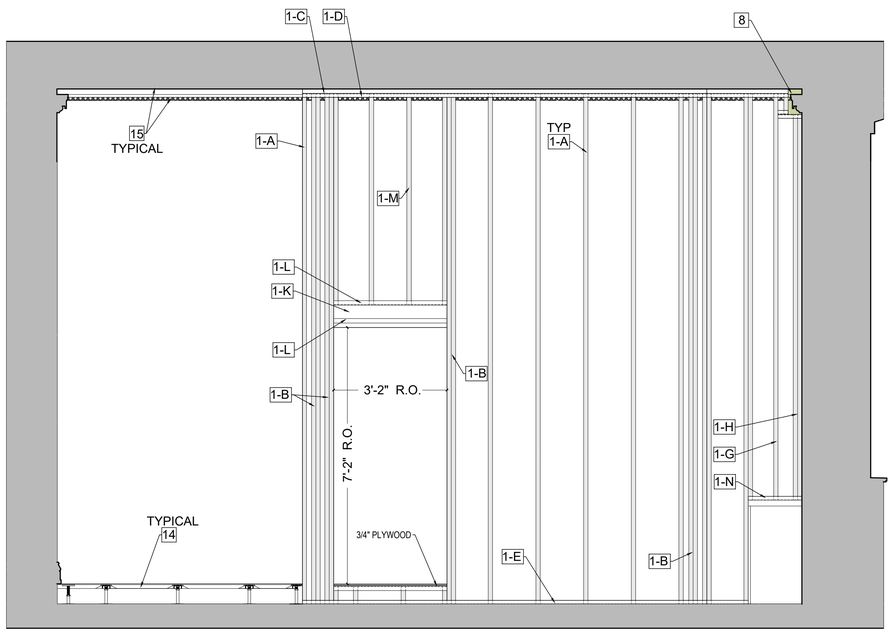

C-1 NEW WORK: WALL FRAMING / INTERIOR ELEVATION OF FRAMING 10
1/2" = 1'-0"

KEY NOTES

1. NEW 4 7/8" PARTITION (3 5/8" 16 GA STEEL STUDS WITH 5/8" GWB EACH SIDE OF THE WALL & 3 1/2" BATT INSULATION) SECTION UNDER THE FLOOR SYSTEM TO RECEIVE (2) LAYERS OF GWB EACH SIDE. FINISHES AS PER FINISHES SCHEDULE. WALL FRAMING AS FOLLOWS (CONSULT ROOM SECTIONS & WALL TYPES):

   A - 3 5/8" 16 GA STEEL STUDS @ 16" o.c. FULL HEIGHT FROM TOP OF SLAB TO CEILING VAULT
   B - (2) 3 5/8" 16 GA STEEL STUDS FASTENED TOGETHER W/ (1) #10-16 TEK SCREW @ 24" o.c.
   C - 2 x 4 WOOD PLATE ANCHORED TO UNDERSIDE OF VAULTED PLASTER CEILING W/ 1/4"X DEWALT/ POWERS ZAMAC NAILIN ANCHORS @12" O.C CUT PLATE TO CONFORM TO CEILING. PRE-DRILL WHOLES TO AVOID CRACKING HISTORIC PLASTER
   D - 3 5/8" 14 GA STEEL TRACK FASTENED TO WOOD PLATE. TRACK CAN BE INSTALLED DIRECTLY ON TO PLASTER CEILING WITHOUT THE WOOD PLATE. USE W/ 1/4"X DEWALT/ POWERS ZAMAC NAILI ANCHORS @12" O.C. PRE-DRILL WHOLES TO AVOID CRACKING HISTORIC PLASTER
   E - 3 5/8" 14 GA STEEL CONTINUOUS RUNNER ANCHORED TO SLAB W/ TAPCON FASTENERS. FASTENERS TO BE ASTM C1513, CORROSION- RESISTANT- COATED, SELF-DRILLING, & SELF-TAPPING DRILL SCREWS
   F - (1) 3 5/8" 16 GA STEEL STUD AT EACH SIDE OF THE PLATE BRIDGING THE EXISTING VAULT RIB. FRAMING MUST BE KEPT AWAY FROM HISTORIC COMPONENT.
   G - 3 5/8" 16 GA STEEL STUDS FROM TOP OF THE FCU CABINET TO CEILING VAULT
   H - (2) 3 5/8" 16 GA STEEL STUDS FASTENED TOGETHER W/ (1) #10-16 TEK SCREW @ 24" O.C. FROM TOP OF THE FCU CABINET TO CEILING VAULT
   J - 3 5/8" 16 GA STEEL TRACK BRIDGING BENEATH RIB MOLDING ATTACHED TO STUDS AS DESCRIBED IN 1F
   K - (2) 8" 14 GA CONTINUOUS HEADER
   L - 3 5/8" 14 GA HEADER TRACK ABOVE AND BELOW HEADER. ABOVE FRAME INSERT PT WOOD BLOCKING TO FASTEN DOOR FRAME
   M - 3 5/8" 16 GA STEEL STUDS FROM TOP OF THE DOOR HEADER TO CEILING VAULT
   N - 3 5/8" 14 GA TRACK ATTACHED TO MILLWORK CABINET W/ WOOD SCREWS

   FRAME AROUND EXISTING HISTORIC PLASTER CEILING RIB MOLDING. NEW DRYWALL TO BE SCRIBED TO HISTORIC CROWN MOLDING, VAULTED CEILING AND RIBS, THE GAP MUST BE CAULKED. NEVER CUT PLASTER MOLDING

2. NEW PARTITION TO RECEIVE $\frac{3}{4}$" THICK STRAIGHT BASEBOARD (PAINTED) TO MATCH THE HEIGHT OF THE FIRST STEP OF THE EXISTING, ORIGINAL BASEBOARD ON BOTH SIDES
3. EXISTING MILLWORK TO REMAIN UNALTERED. PROTECT DURING CONSTRUCTION. FRAME NEW PARTITION AROUND THE MILLWORK AS PER SECTION AND FRAMING PLAN. DO NOT ALTER MILLWORK. REFINISH IN KIND AS PER FINISHES SCHEDULE
4. REMOVE PORTION OF EXISTING NOT ORIGINAL BASEBOARD AS NEEDED TO INSTALL NEW PARTITION
5. WHERE THE NEW PARTITION IS ATTACHED TO EXISTING EXTERIOR MASONRY & PLASTER WALL INSTALL A MOISTURE BARRIER THE WIDTH OF THE STUDS FULL HEIGHT
6. EXISTING ORIGINAL MASONRY WALL AND BASEBOARD TO REMAIN UNALTERED. PROTECT DURING CONSTRUCTION
7. EXISTING WINDOW WITH ORIGINAL CAST IRON SURROUND TO REMAIN UNALTERED. PROTECT DURING CONSTRUCTION. REFINISH CAST IRON SURROUND, JAMBS AND SILL AS PER FINISHES SCHEDULE (IN KIND). WINDOW SASHES TO BE CLEANED AT THE CONCLUSION OF THE WORK. REINSTALL WINDOW BLINDS IF THEY WERE REMOVED
8. HISTORIC CROWN MOLDING AND CEILING RIB MOLDINGS TO REMAIN. NEW PARTITIONS SHOULD BE BUILD AS PER WALL SECTIONS TO AVOID DAMAGING THE HISTORIC ELEMENTS. NEVER ALTER OR CUT THE HISTORIC PLASTER MOLDINGS
9. EXISTING FCU TO REMAIN. COVER DURING CONSTRUCTION TO PREVENT DUST FROM ENTERING THE VENTS. REFINISH MILLWORK WITHIN ROOM 2453-D AS PER FINISHES SCHEDULE (IN KIND)
10. REINSTALLED ALTERED FLOOR SYSTEM PANELS AFTER THE NEW WALL IS CONSTRUCTED
11. PATCH AND PREP ENTIRE SPACE FOR NEW PAINT, ALL ELEMENTS THAT ARE CURRENTLY PAINTED INCLUDED: WALLS, CEILING & CROWN MOLDING (SEE KEY NOTE 16), BASEBOARD (ORIGINAL AND NEW), FCU CABINETS, WINDOWS, DOORS AND NICHE. PREP AND REFINISH ALL COMPONENTS AS PER FINISHES SCHEDULE
12. FOR PLASTER REPAIRS, FOLLOW RESTORATION GUIDELINES INCLUDED UNDER THE HEADING "PLASTER REPAIRS AND RESTORATION METHODS AND MATERIALS" ON A-102. DO NOT USE JOINT OR SPACKLING COMPOUND.
13. DO NOT USE WOOD FILLERS NOT LABELED FOR THAT PURPOSE TO REPAIR HISTORIC AND NON-HISTORIC ELEMENTS
14. EXISTING FLOOR PANEL SYSTEM TO REMAIN UNALTERED (EXCEPT WHERE NOTED) CLEAN FLOOR PANELS AND REMOVE ALL GLUE AND DEBRIS PRIOR TO INSTALLING NEW CARPET TILE AS PER FINISHES SCHEDULE. FOLLOW THE MANUFACTURER SPECIFICATIONS FOR CARPET INSTALLATION
15. PLASTER VAULTED CEILING AND CROW MOLDING TO REMAIN UNALTERED. PROTECT DURING CONSTRUCTION. THE MAJORITY OF THE CEILING IS NOT TO BE REFINISHED EXCEPT FOR AREAS AFFECTED BY THE WALL DEMOLITION AND ANY AREAS WHERE THE EXISTING FINISH IS FAILING
16. EXISTING NON-ORIGINAL PARTITION W/ BASEBOARD AND CLERESTORY WINDOWS TO REMAIN. PREPARE TO BE REFINISHED
17. EXISTING LIGHT FIXTURES AND FIRE SUPPRESSION SYSTEM TO REMAIN UNALTERED. PROTECT DURING CONSTRUCTION AND CLEAN AT ITS CONCLUSION
18. NEW DOOR ASSEMBLY CONSISTING OF A 2-PANEL DOOR LEAF & FLAT CASING PAINTED TO MATCH EXACTLY EXISTING DOOR ASSEMBLY 2453-E (HEIGHT, PROFILE AND WIDTH OF CASING) HARDWARE WILL DIFFER TO COMPLY WITH ABA. SEE PERTINENT SCHEDULES. NOTE: IF EXISTING DOOR 2453 E IS USABLE AND IT IS APPROVED BY TREASURY'S COR, REINSTALL ONLY EXISTING LEAF AND FRAME. INSTALL NEW HARDWARE AS PER SCHEDULE AND CASING
19. EXISTING DOOR ASSEMBLY TO REMAIN UNALTERED, REFINISH IN KIND AS PER FINISHES SCHEDULE
20. EXISTING PANELED WALL TO REMAIN UNALTERED. REFINISH IN KIND IF NEEDED

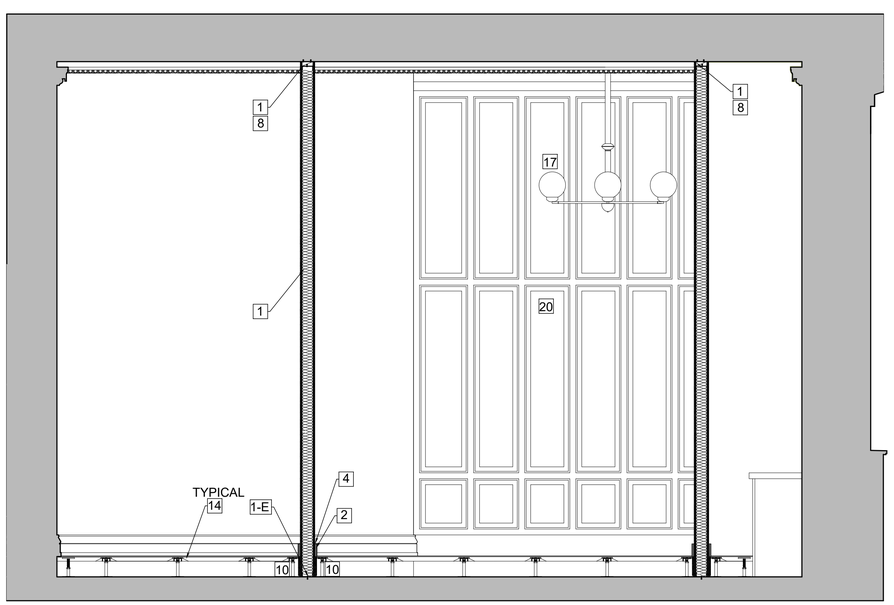

A-1 NEW WORK: SECTION 10 - 10
1/2" = 1'-0"

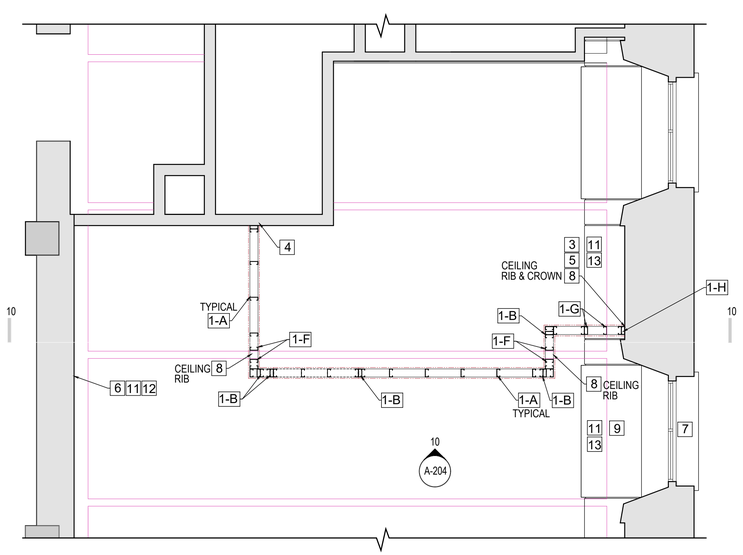

A-3 NEW OFFICE 2453 WALLS FRAMING PLAN
3/8" = 1'-0"

NORTH

MERIDIEN GROUP

MERIDIEN GROUP, LLC
208 SOUTH KING ST. SUITE 303
LEESBURG, VA 20175
(703) 777-8285
www.meridiengroupllc.com

CITADEL
ARCHITECTURE | HISTORIC PRESERVATION | PLANNING | DESIGN

CERTIFICATIONS

KEY PLAN

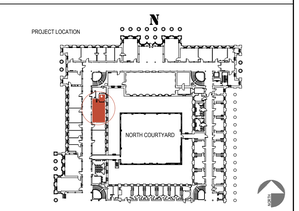

REVISION NOTES

MARK	DATE	DESCRIPTION

GRAPHIC SCALE

1/2" = 1' - 0"

CAUTION: IF THIS DRAWING IS A REDUCTION THIS GRAPHIC SCALE MUST BE USED

CONTRACTORS	A/E CON. NO.	
	A/E TASK NO.	
	CONS. CONTR	
	CONS. WORK	
	PRIME A/E	MERIDIEN GROUP / CITADEL DCA
	SUB A/E	
BUILDING	NAME	
	STREET	
	CITY/ST./ZIP	WASHINGTON, DC
	BUILDING NO.	DC-
	OTHER	
	BUILDING NOs.	
	FACILITY CODE	
PROJECT	PROJECT TITLE	FEDERAL OFFICE BUILDING MT 2453 OFFICE RENOVATION
	PROJECT DESCRIPTION	RENOVATION OF SECOND FLOOR SUITE
	PROJECT NO.	MT2453_26_004
	GSA PM	BARBARA CHOATE
	SUBMISSION	100% SUBMISSION FOR REVIEW
	SUB. DATE	28 APRIL 2026
DRAWING	DRAWING TITLE	NEW FRAMING SECTIONS AND ELEVATIONS
	FILE NAME	
	FLOOR NO.	2ND FLOOR
	DRAWN BY	AGF DATE DRAFTED: 04/14/2026
	CHECKED BY	LSP SHEET SIZE: 24 x 36
	DRAWING NO.	A-204
		DISCIPLINE SHEET TYPE SEQUENCE
		SHEET 13 OF 21

WALL TYPE

A | NON-STC-50 WALL - NON FIRE RATED

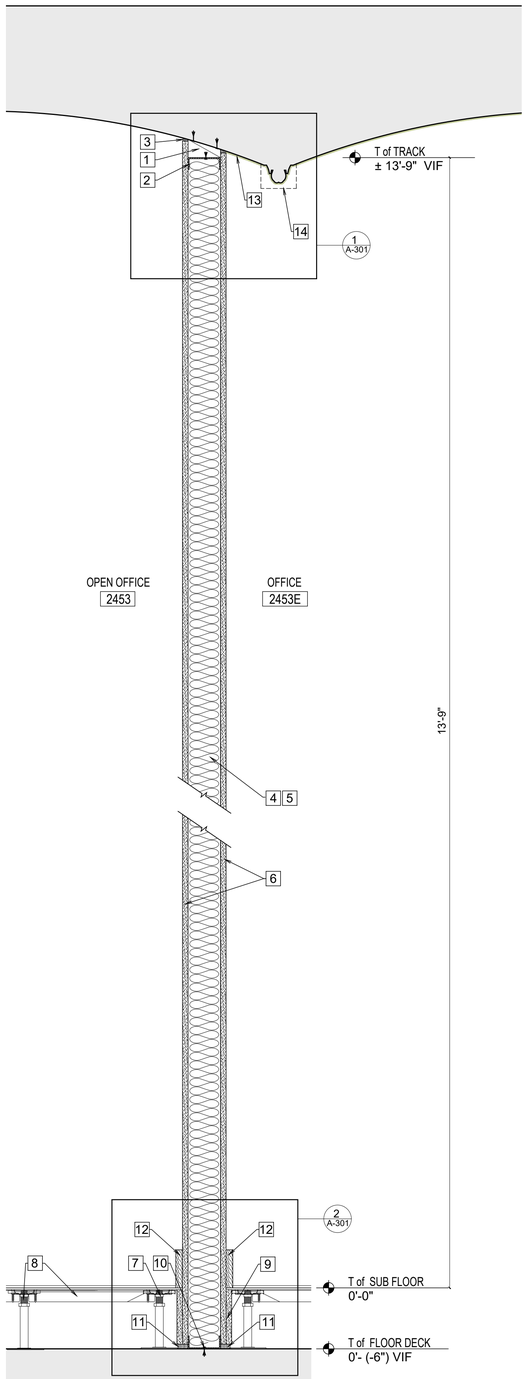

A-1 WALL TYPE A
1 1/2"= 1'-0"

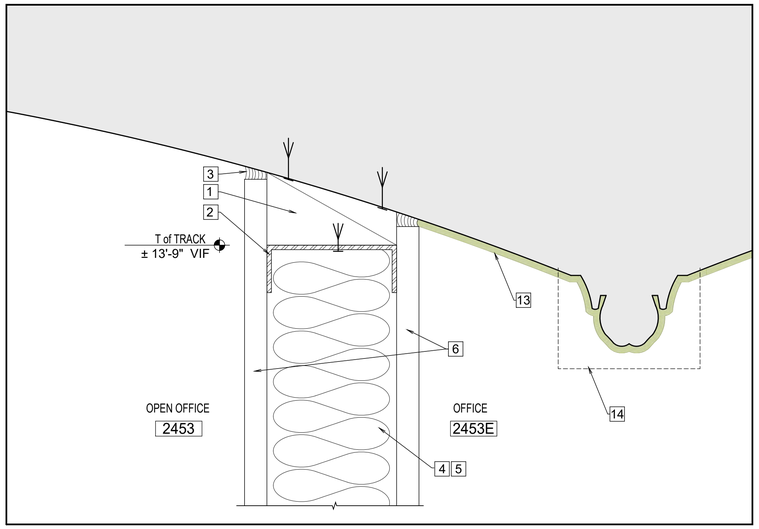

C-3 DETAIL 1
6" = 1'-0"

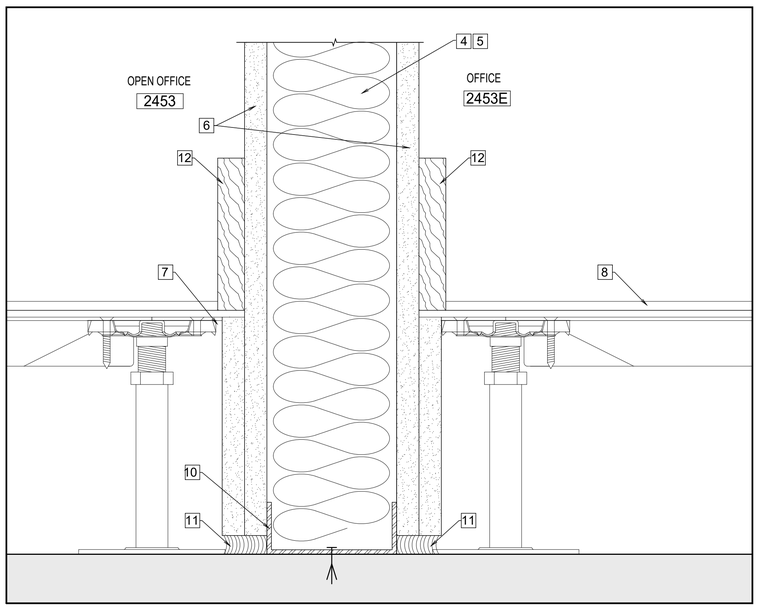

A-3 DETAIL 2
6" = 1'-0"

GENERAL WALL CONSTRUCTION NOTES

1. FRAME AROUND EXISTING HISTORIC PLASTER CEILING RIB MOLDING; NEVER CUT PLASTER MOLDING. WALL FRAMING TO BE:

   A. STUDS: 3 5/8" 16 GA. FASTEN STUDS TO UPPER AND LOWER TRACKS WITH (1) SCREW AT EACH FLANGE (TYP) W/ (1) #10-16 TEK SCREWS

   B. UPPER TRACK: CONTINUOUS, 3 5/8" 14 GA. FASTENED TO WOOD PLATE. TRACK CAN BE INSTALLED DIRECTLY ON TO PLASTER CEILING WITHOUT THE WOOD PLATE. USE W/ 1/4"X DEWALT/ POWERS ZAMAC NAILI ANCHORS @12" O.C. PRE-DRILL WHOLES TO AVOID CRACKING HISTORIC PLASTER

   C. LOWER TRACK ON CONCRETE SLAB: 3 5/8" 14 GA. CONTINUOUS RUNNER ANCHORED TO SLAB W/ TAPCON FASTENERS. FASTENERS TO BE ASTM C1513, CORROSION- RESISTANT- COATED, SELF-DRILLING, & SELF-TAPPING DRILL SCREWS

   D. ALL OTHER FRAMING TRACK OR HEADERS TO BE 14 GA. UNLESS NOTED OTHERWISE

2. CONTINUOUS CAULK AT ALL INTERSECTIONS BETWEEN THE PARTITION / WALL W/ OTHER SURFACES ON BOTH SIDES AIR TIGHT (HORIZONTAL-DECK OR VERTICAL- OTHER WALLS) WITH NON HARDENING CAULK SUCH AS:

   A. NON-HARDENING POLYURETHANE TYPE, ASTM C920, TYPE M, CLASS 25, GRADE NS: TREMCO "DYMERIC 511" OR APPROVED EQUAL.

   B. NON-HARDENING POLYSULPHIDE TYPE, ASTM C920, ONE- PART: PECORA "GC-9" OR EQUAL

   C. NON-HARDENING SILICONE TYPE, ASTM C920, TYPE S, CLASS 25, GRADE NS, ONE-PART, LOW MODULE USGE "SILPRUF", DOW CORNING 790, TREMCO "SPECTRUM" 1 INCH, PECORA 864, OR APPROVED EQUAL.

3. NEW WALL MUST BE UNIFORMLY FINISHED ON BOTH SIDES, FROM FLOOR SLAB FULL HEIGHT

4. ALL GWB INSTALLATION MUST BE AS FOLLOWS:

   A. PANEL INSTALLATION TO BE FULL WALL HEIGHT SCRIBED TO THE CONTOUR OF THE CEILING VAULTS, RIBS AND CROWN MOLDING. THE GAP BETWEEN THE SCRIBED GWB AND THE HISTORIC ELEMENT MUST BE FULLY CAULKED AS PER NOTE 2.

   B. CROSS LAY ALL MULTIPLE LAYERS OF GWB. DO NOT LAY ONE SEAM DIRECTLY OVER THE ONE BENEATH;

   C. FILL ALL SEAMS BETWEEN THE GWB SHEETS W/ ACOUSTIC SEALANT PRIOR TO TAPING AND SPACKLING SEAMS;

5. D. APPLY P-1 FINISH AS PER FINISHES SCHEDULE.

   FURNISH AND INSTALL BLOCKING AS REQUIRED AT ALL LOCATIONS FOR THE PROPER AND SECURE INSTALLATION OF ALL WALL MOUNTED EQUIPMENT OR MILLWORK WHETHER SPECIFICALLY NOTED IN THE DRAWINGS OR NOT.

KEY NOTES

1. 2 x 4 WOOD PLATE ANCHORED TO UNDERSIDE OF VAULTED PLASTER CEILING W/ 1/4"X DEWALT/ POWERS ZAMAC NAILIN ANCHORS @12" O.C CUT PLATE TO CONFORM TO CEILING. PRE-DRILL WHOLES TO AVOID CRACKING HISTORIC PLASTER
2. 3 5/8" 14 GA STEEL TRACK FASTENED TO WOOD PLATE. TRACK CAN BE INSTALLED DIRECTLY ON TO PLASTER CEILING WITHOUT THE WOOD PLATE. USE W/ 1/4"X DEWALT/ POWERS ZAMAC NAILI ANCHORS @12" O.C. PRE-DRILL WHOLES TO AVOID CRACKING HISTORIC PLASTER
3. SEALANT, FIRE SAFE OR NON-SHRINK GROUT IN ALL VOIDS ABOVE TRACK. SEE GENERAL WALL CONSTRUCTION NOTE "2".
4. 3 5/8" 16 GA STEEL STUDS @ 16" O.C. FULL HEIGHT FROM TOP OF SLAB TO CEILING VAULT. FASTEN STUDS TO UPPER AND LOWER TRACKS WITH (1) SCREW AT EACH FLANGE (TYP).
5. 3 1/2" ROCKWOOL ACOUSTICAL FIRE INSULATION OR EQUAL FULL HEIGHT OF WALL CAVITY. MATERIAL MUST BE FASTENED IN SUCH WAY AS TO PREVENT IT FROM SLIDING DOWN, LEAVING A VOID AT THE TOP.
6. (1) LAYER OF 5/8" GYPSUM WALL BOARD GOLD BOND FIRE-SHIELD OR EQUAL EACH SIDE OF THE WALL INSTALLED AS PER GENERAL CONSTRUCTION NOTE "4"
7. REMOVE FLOOR PANELS AS NEEDED TO CONSTRUCT THE WALL. CUT PANEL WITHIN 1/4" OFF THE WALL EACH SIDE.PANELS ARE TO REMAIN ON SITE. THE FLOOR PANELS WILL BE ADJUSTED AND THEN REINSTALLED AFTER THE CONSTRUCTION OF THE NEW WALL IS COMPLETED
8. EXISTING FLOOR PANEL SYSTEM TO REMAIN UNALTERED (EXCEPT WHERE NOTED) CLEAN FLOOR PANELS AND REMOVE ALL GLUE AND DEBRIS PRIOR TO INSTALLING NEW CARPET TILE AS PER FINISHES SCHEDULE. FOLLOW THE MANUFACTURER SPECIFICATIONS FOR CARPET INSTALLATION
9. (2) LAYERS OF 5/8" GYPSUM WALL BOARD GOLD BOND FIRE-SHIELD OR EQUAL BOTH SIDES OF THE WALL UNDER FLOOR PANEL SYSTEM INSTALLED AS PER GENERAL CONSTRUCTION NOTE "4"
10. 3 5/8" 14 GA STEEL CONTINUOUS RUNNER ANCHORED TO SLAB W/ TAPCON FASTENERS. FASTENERS TO BE ASTM C1513, CORROSION-RESISTANT- COATED, SELF-DRILLING, & SELF-TAPPING DRILL SCREWS
11. FILL ALL BASE VOIDS WITH BACKER ROD AND ACOUSTIC SEALANT. SEE GENERAL CONSTRUCTION NOTE "2".
12. 3/4" THICK STRAIGHT BASEBOARD (PAINTED) TO MATCH THE HEIGHT OF THE FIRST STEP OF THE EXISTING, ORIGINAL BASEBOARD ON BOTH SIDES
13. GWB PANEL SCRIBED TO THE CONTOUR OF THE CEILING VAULTS, RIBS AND CROWN MOLDING. GWB INSTALLATION AS PER GENERAL CONSTRUCTION NOTE 4. THE GAP BETWEEN THE SCRIBED GWB AND THE HISTORIC ELEMENT MUST BE FULLY CAULKED AS PER NOTE 2.
14. KEEP FRAMING AWAY FROM RIB AND CROWN MOLDINGS

LEGEND

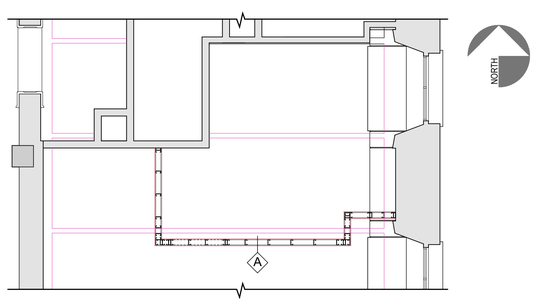

MERIDIEN GROUP

MERIDIEN GROUP, LLC
208 SOUTH KING ST. SUITE 303
LEESBURG, VA 20175
(703) 777-8285
www.meridiengroupllc.com

DCA CITADEL
ARCHITECTURE | HISTORIC PRESERVATION | PLANNING | DESIGN

CERTIFICATIONS

KEY PLAN

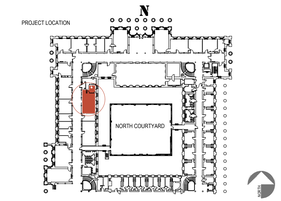

REVISION NOTES

MARK	DATE	DESCRIPTION

GRAPHIC SCALE

6" =1'-0" 0 1" 2" 3" 4" 5" 6"

1 1/2" =1'-0" 0 2" 4" 6" 8" 10" 1' 2'

CAUTION: IF THIS DRAWING IS A REDUCTION THIS GRAPHIC SCALE MUST BE USED

CONTRACTORS	A/E CON. NO.	
	A/E TASK NO.	
	CONS. CONTR	
	CONS. WORK	
	PRIME A/E	MERIDIEN GROUP / CITADEL DCA
	SUB A/E	
BUILDING	NAME	
	STREET	
	CITY/ST./ZIP	WASHINGTON, DC
	BUILDING NO.	DC-
	OTHER	
	BUILDING NOs.	
	FACILITY CODE	
PROJECT	PROJECT TITLE	FEDERAL OFFICE BUILDING MT 2453 OFFICE RENOVATION
	PROJECT DESCRIPTION	RENOVATION OF SECOND FLOOR SUITE
	PROJECT NO.	MT2453_26_004
	GSA PM	BARBARA CHOATE
	SUBMISSION	100% SUBMISSION FOR REVIEW
	SUB. DATE	28 APRIL 2026
DRAWING	DRAWING TITLE	WALL TYPE A
	FILE NAME	
	FLOOR NO.	2ND FLOOR
	DRAWN BY	AGF DATE DRAFTED: 04/14/2026
	CHECKED BY	LSP SHEET SIZE: 24 x 36
	DRAWING NO.	A-301
		DISCIPLINE SHEET TYPE SEQUENCE
		SHEET 14 OF 21

WALL TYPE

B | NON-STC-50 WALL - NON FIRE RATED

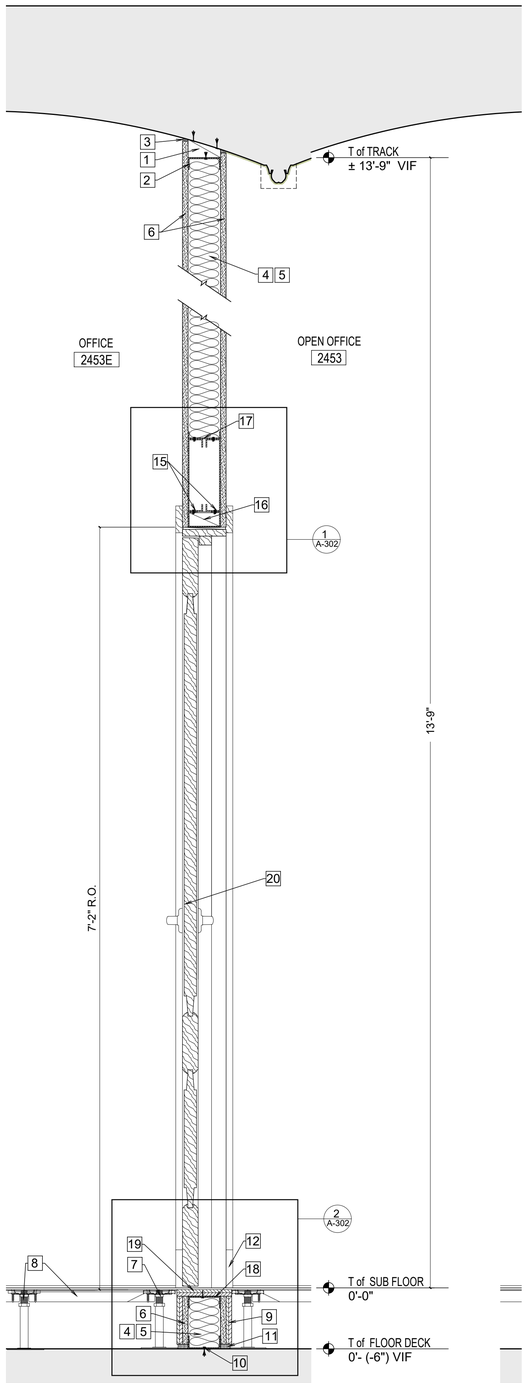

A-1 WALL TYPE B
1 1/2" = 1'-0"

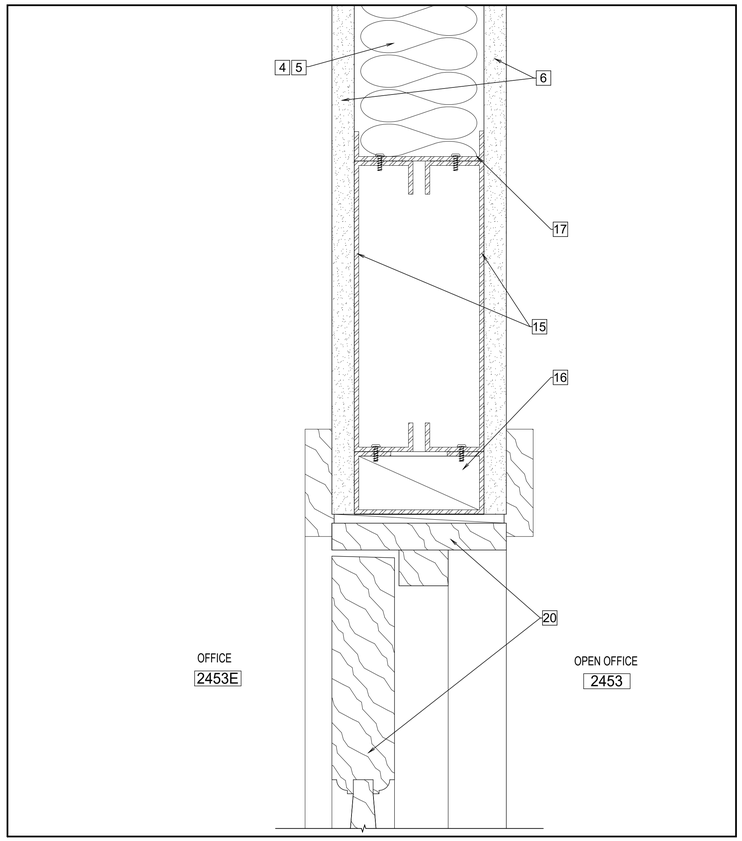

C-3 DETAIL 1
6" = 1'-0"

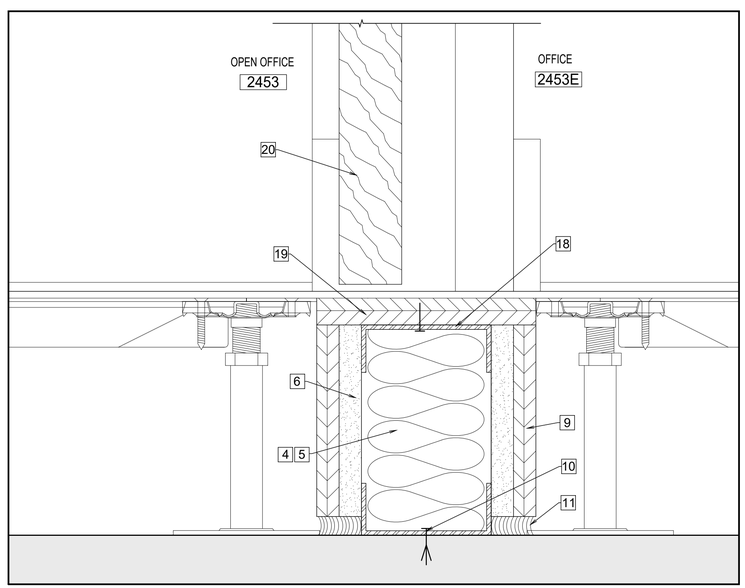

A-3 DETAIL 2
6" = 1'-0"

GENERAL WALL CONSTRUCTION NOTES

1. FRAME AROUND EXISTING HISTORIC PLASTER CEILING RIB MOLDING; NEVER CUT PLASTER MOLDING. WALL FRAMING TO BE:
   - A. STUDS: 3 5/8" 16 GA. FASTEN STUDS TO UPPER AND LOWER TRACKS WITH (1) SCREW AT EACH FLANGE (TYP) W/ (1) #10-16 TEK SCREWS
   - B. UPPER TRACK: CONTINUOUS, 3 5/8" 14 GA. FASTENED TO WOOD PLATE. TRACK CAN BE INSTALLED DIRECTLY ON TO PLASTER CEILING WITHOUT THE WOOD PLATE. USE W/ 1/4"X DEWALT/ POWERS ZAMAC NAILI ANCHORS @12" O.C. PRE-DRILL WHOLES TO AVOID CRACKING HISTORIC PLASTER
   - C. LOWER TRACK ON CONCRETE SLAB: 3 5/8" 14 GA. CONTINUOUS RUNNER ANCHORED TO SLAB W/ TAPCON FASTENERS. FASTENERS TO BE ASTM C1513, CORROSION- RESISTANT- COATED, SELF-DRILLING, & SELF-TAPPING DRILL SCREWS
   - D. ALL OTHER FRAMING TRACK OR HEADERS TO BE 14 GA. UNLESS NOTED OTHERWISE
2. CONTINUOUS CAULK AT ALL INTERSECTIONS BETWEEN THE PARTITION / WALL W/ OTHER SURFACES ON BOTH SIDES AIR TIGHT (HORIZONTAL-DECK OR VERTICAL- OTHER WALLS) WITH NON HARDENING CAULK SUCH AS:
   - A. NON-HARDENING POLYURETHANE TYPE, ASTM C920, TYPE M, CLASS 25, GRADE NS: TREMCO "DYMERIC 511" OR APPROVED EQUAL.
   - B. NON-HARDENING POLYSULPHIDE TYPE, ASTM C920, ONE- PART: PECORA "GC-9" OR EQUAL
   - C. NON-HARDENING SILICONE TYPE, ASTM C920, TYPE S, CLASS 25, GRADE NS, ONE-PART, LOW MODULE USGE "SILPRUF", DOW CORNING 790, TREMCO "SPECTRUM" 1 INCH, PECORA 864, OR APPROVED EQUAL.
3. NEW WALL MUST BE UNIFORMLY FINISHED ON BOTH SIDES, FROM FLOOR SLAB FULL HEIGHT
4. ALL GWB INSTALLATION MUST BE AS FOLLOWS:
   - A. PANEL INSTALLATION TO BE FULL WALL HEIGHT SCRIBED TO THE CONTOUR OF THE CEILING VAULTS, RIBS AND CROWN MOLDING. THE GAP BETWEEN THE SCRIBED GWB AND THE HISTORIC ELEMENT MUST BE FULLY CAULKED AS PER NOTE 2.
   - B. CROSS LAY ALL MULTIPLE LAYERS OF GWB. DO NOT LAY ONE SEAM DIRECTLY OVER THE ONE BENEATH;
   - C. FILL ALL SEAMS BETWEEN THE GWB SHEETS W/ ACOUSTIC SEALANT PRIOR TO TAPING AND SPACKLING SEAMS;
   - D. APPLY P-1 FINISH AS PER FINISHES SCHEDULE.
5. FURNISH AND INSTALL BLOCKING AS REQUIRED AT ALL LOCATIONS FOR THE PROPER AND SECURE INSTALLATION OF ALL WALL MOUNTED EQUIPMENT OR MILLWORK WHETHER SPECIFICALLY NOTED IN THE DRAWINGS OR NOT.

KEY NOTES

1. 2 x 4 WOOD PLATE ANCHORED TO UNDERSIDE OF VAULTED PLASTER CEILING W/ 1/4"X DEWALT/ POWERS ZAMAC NAILIN ANCHORS @12" O.C CUT PLATE TO CONFORM TO CEILING. PRE-DRILL WHOLES TO AVOID CRACKING HISTORIC PLASTER
2. 3 5/8" 14 GA STEEL TRACK FASTENED TO WOOD PLATE. TRACK CAN BE INSTALLED DIRECTLY ON TO PLASTER CEILING WITHOUT THE WOOD PLATE. USE W/ 1/4"X DEWALT/ POWERS ZAMAC NAILI ANCHORS @12" O.C. PRE-DRILL WHOLES TO AVOID CRACKING HISTORIC PLASTER
3. SEALANT, FIRE SAFE OR NON-SHRINK GROUT IN ALL VOIDS ABOVE TRACK. SEE GENERAL WALL CONSTRUCTION NOTE "2".
4. 3 5/8" 16 GA STEEL CRIPPLE STUDS FROM TOP OF THE HEADER UPPER TRACK TO CEILING VAULT. FASTEN STUDS TO UPPER AND LOWER TRACKS WITH (1) SCREW AT EACH FLANGE (TYP). SPACING AS DEPICTED
5. 3 1/2" ROCKWOOL ACOUSTICAL FIRE INSULATION OR EQUAL FULL HEIGHT OF WALL CAVITY. MATERIAL MUST BE FASTENED IN SUCH WAY AS TO PREVENT IT FROM SLIDING DOWN, LEAVING A VOID AT THE TOP.
6. (1) LAYER OF 5/8" GYPSUM WALL BOARD GOLD BOND FIRE-SHIELD OR EQUAL EACH SIDE OF THE WALL INSTALLED AS PER GENERAL CONSTRUCTION NOTE "4"
7. REMOVE FLOOR PANELS AS NEEDED TO CONSTRUCT THE WALL. CUT PANEL WITHIN 1/4" OFF THE WALL EACH SIDE.PANELS ARE TO REMAIN ON SITE. THE FLOOR PANELS WILL BE ADJUSTED AND THEN REINSTALLED AFTER THE CONSTRUCTION OF THE NEW WALL IS COMPLETED
8. EXISTING FLOOR PANEL SYSTEM TO REMAIN UNALTERED (EXCEPT WHERE NOTED) CLEAN FLOOR PANELS AND REMOVE ALL GLUE AND DEBRIS PRIOR TO INSTALLING NEW CARPET TILE AS PER FINISHES SCHEDULE.
9. (1) LAYER OF 3/4" PLYWOOD BOTH SIDES OF THE WALL UNDER FLOOR PANEL SYSTEM THE LENGTH OF THE DOOR OPENING
10. 3 5/8" 14 GA STEEL CONTINUOUS RUNNER ANCHORED TO SLAB W/ TAPCON FASTENERS. FASTENERS TO BE ASTM C1513, CORROSION-RESISTANT- COATED, SELF-DRILLING, & SELF-TAPPING DRILL SCREWS
11. FILL ALL BASE VOIDS WITH BACKER ROD AND SEALANT BOTH SIDES OF THE WALL. SEE GENERAL CONSTRUCTION NOTE "2".
12. 3/4" THICK STRAIGHT BASEBOARD TO MATCH THE HEIGHT OF THE FIRST STEP OF THE EXISTING, ORIGINAL BASEBOARD. BOTH SIDES
13. GWB PANEL SCRIBED TO THE CONTOUR OF THE CEILING VAULTS, RIBS AND CROWN MOLDING. GWB INSTALLATION AS PER GENERAL CONSTRUCTION NOTE 4. THE GAP BETWEEN THE SCRIBED GWB AND THE HISTORIC ELEMENT MUST BE FULLY CAULKED AS PER NOTE 2.
14. KEEP FRAMING AWAY FROM RIB AND CROWN MOLDINGS
15. (1) 8" 14 GA CONTINUOUS HEADER SEE FRAMING DETAILS A-501).
16. 3 5/8" 16GA HEADER TRACK W/ PT PLATE (WOOD BLOCKING) TO FASTEN DOOR FRAME. BEVEL OR TRIM PLATE AS NEEDED
17. 3 5/8" 16GA TRACK ABOVE HEADER FASTENED EACH 8" TO HEADER W/ (1) #10-16 TEK SCREW @ 12" O.C. IF CRIPPLE STUD CLIPS ARE USED, TRACK WILL NOT BE NEEDED (SEE FRAMING DETAILS A-501).
18. 3 5/8" 16GA TRACK UNDER FLOOR PANEL AT DOOR OPENING
19. (1) LAYER OF 3/4" PLYWOOD UNDER FLOOR PANEL AT DOOR OPENING TO FASTEN TRACK
20. DOOR ASSEMBLY CONSISTING OF WOOD FRAME, WOOD DOOR LEAF, ALL NECESSARY HARDWARE AND FLAT CASING. SEE FINISHES, DOOR AND HARDWARE SCHEDULES

LEGEND

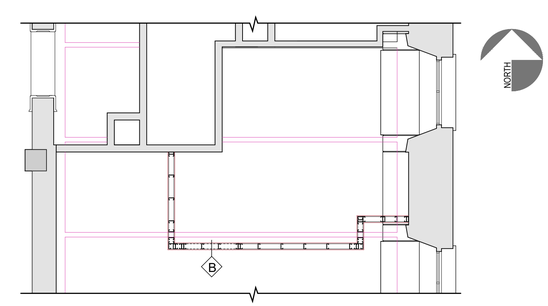

MERIDIEN GROUP

MERIDIEN GROUP, LLC
208 SOUTH KING ST. SUITE 303
LEESBURG, VA 20175
(703) 777-8285
www.meridiengroupllc.com

DCA CITADEL
ARCHITECTURE | HISTORIC PRESERVATION | PLANNING | DESIGN

CERTIFICATIONS

KEY PLAN

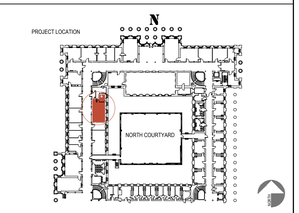

REVISION NOTES

MARK	DATE	DESCRIPTION

GRAPHIC SCALE

6" =1'-0" 0 1" 2" 3" 4" 5" 6"

1 1/2" =1'-0" 0 2" 4" 6" 8" 10" 1' 2'

CAUTION: IF THIS DRAWING IS A REDUCTION THIS GRAPHIC SCALE MUST BE USED

CONTRACTORS	A/E CON. NO.	
	A/E TASK NO.	
	CONS. CONTR	
	CONS. WORK	
	PRIME A/E	MERIDIEN GROUP / CITADEL DCA
	SUB A/E	
BUILDING	NAME	
	STREET	
	CITY/ST./ZIP	WASHINGTON, DC
	BUILDING NO.	DC-
	OTHER	
	BUILDING NOs.	
	FACILITY CODE	
PROJECT	PROJECT TITLE	FEDERAL OFFICE BUILDING MT 2453 OFFICE RENOVATION
	PROJECT DESCRIPTION	RENOVATION OF SECOND FLOOR SUITE
	PROJECT NO.	MT2453_26_004
	GSA PM	BARBARA CHOATE
	SUBMISSION	100% SUBMISSION FOR REVIEW
	SUB. DATE	28 APRIL 2026
DRAWING	DRAWING TITLE	WALL TYPE B
	FILE NAME	
	FLOOR NO.	2ND FLOOR
	DRAWN BY	AGF DATE DRAFTED: 04/14/2026
	CHECKED BY	LSP SHEET SIZE: 24 x 36
	DRAWING NO.	A-302
		DISCIPLINE SHEET TYPE SEQUENCE
		SHEET 15 OF 21

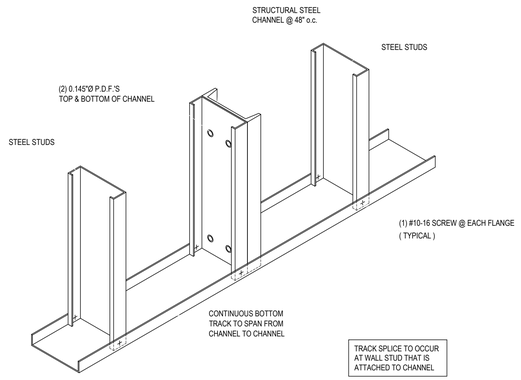

C-1 INFILL FRAMING
NTS

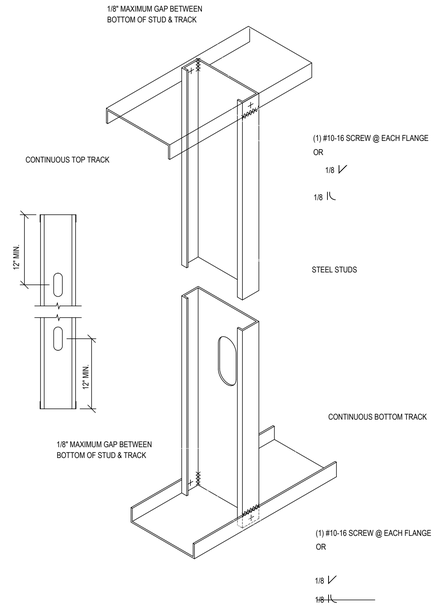

C-3 STUD TO TRACK ATTACHMENT
NTS

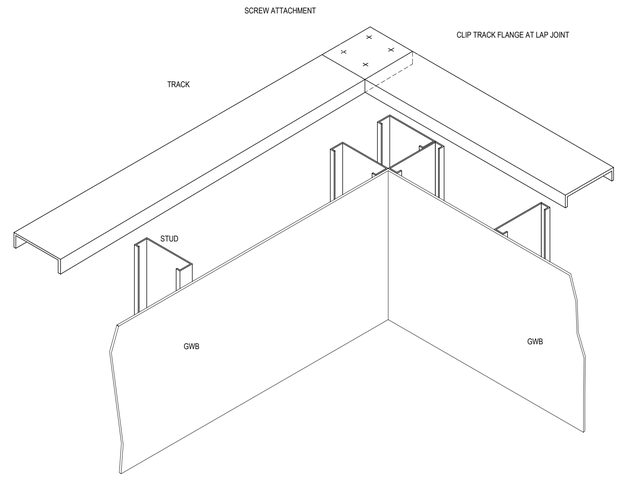

C-5 WALL FRAMING AT CORNER TRACK LAP CONNECTION
NTS

NOTES:

1. ALL RadHeader PRO™ AND HDS HEADERS MUST BE 1/2" LESS THAN ROUGH OPENING WIDTH TO FIT INSIDE HDSC HEADER BRACKETS.
2. ALL HEADER MEMBERS MUST SPAN ENTIRE LENGTH OF OPENING WITHOUT SPLICES

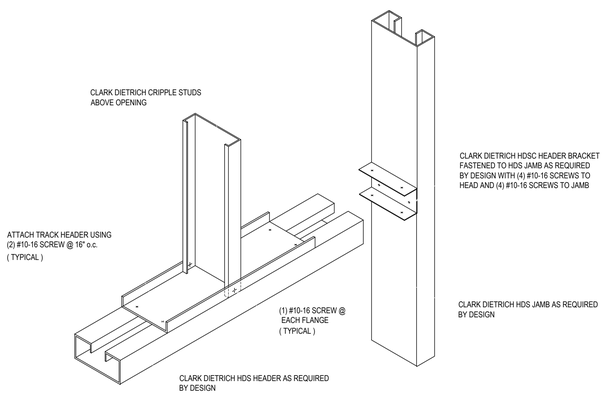

A-1 HDS HEADER CONNECTION
NTS

NOTE:

1. ALL HEADER MEMBERS MUST SPAN ENTIRE LENGTH OF OPENING WITHOUT SPLICES

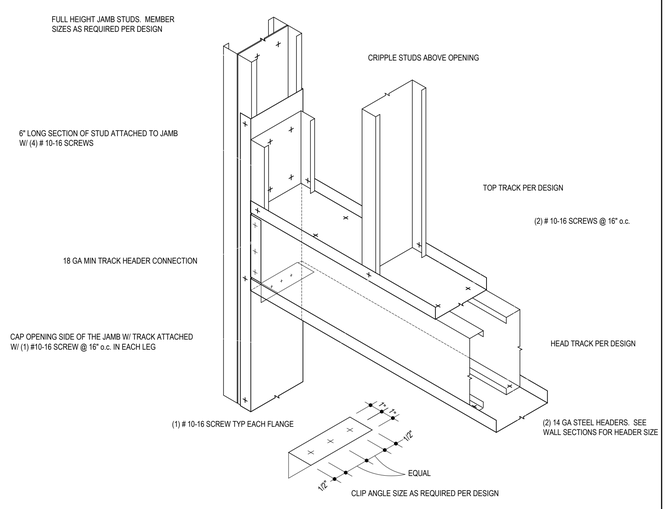

A-3 BOXED HEADER: JAMB DETAIL TRACK / SHOE
NTS

NOTE:

1. ALL HEADER MEMBERS MUST SPAN ENTIRE LENGTH OF OPENING WITHOUT SPLICES

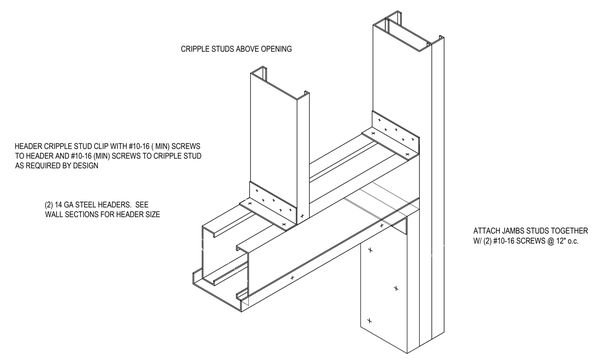

A-5 CRIPPLE STUD CONNECTION TO HEADER WITH STUD CLIPS
NTS

MERIDIEN GROUP

MERIDIEN GROUP, LLC
208 SOUTH KING ST. SUITE 303
LEESBURG, VA 20175
(703) 777-8285
www.meridiengroupllc.com

DCA CITADEL
ARCHITECTURE | HISTORIC PRESERVATION | PLANNING | DESIGN

CERTIFICATIONS

KEY PLAN

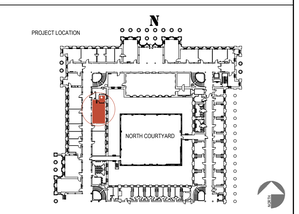

REVISION NOTES

MARK	DATE	DESCRIPTION

GRAPHIC SCALE

CAUTION: IF THIS DRAWING IS A REDUCTION THIS GRAPHIC SCALE MUST BE USED

CAUTION: IF THIS DRAWING IS A REDUCTION THIS GRAPHIC SCALE MUST BE USED

CONTRACTORS	A/E CON. NO.	
	A/E TASK NO.	
	CONS. CONTR	
	CONS. WORK	
	PRIME A/E	MERIDIEN GROUP / CITADEL DCA
	SUB A/E	
BUILDING	NAME	
	STREET	
	CITY/ST./ZIP	WASHINGTON, DC
	BUILDING NO.	DC-
	OTHER BUILDING NOs.	
	FACILITY CODE	
PROJECT	PROJECT TITLE	FEDERAL OFFICE BUILDING MT 2453 OFFICE RENOVATION
	PROJECT DESCRIPTION	RENOVATION OF SECOND FLOOR SUITE
	PROJECT NO.	MT2453_26_004
	GSA PM	BARBARA CHOATE
	SUBMISSION	100% SUBMISSION FOR REVIEW
	SUB. DATE	28 APRIL 2026
DRAWING	DRAWING TITLE	FRAMING DETAILS
	FILE NAME	
	FLOOR NO.	2ND FLOOR
	DRAWN BY	AGF DATE DRAFTED: 04/14/2026
	CHECKED BY	LSP SHEET SIZE: 24 x 36
	DRAWING NO.	A-501
		DISCIPLINE SHEET TYPE SEQUENCE
		SHEET 16 OF 21

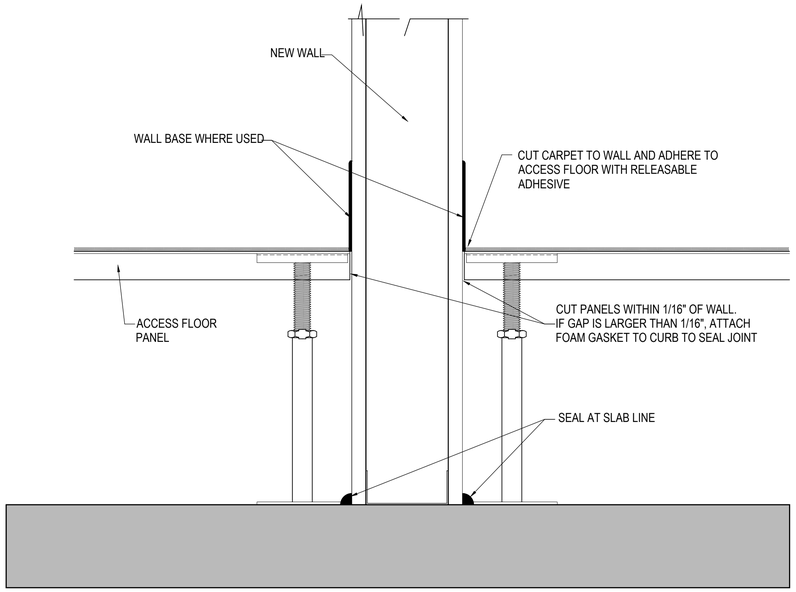

C-1 ACCESS FLOOR PERIMETER SEAL W/ WALL BASE
NTS

THE FOLLOWING ARE GUN-GRADE SEALANTS WHICH HAVE BEEN USED FOR AIR PLENUM SEALING AND COMPLY WITH THE VOC CONTENT LIMITS OF LEED EQ CREDIT 4.1 LOW EMITTING MATERIALS:

SEAL BOND 93 SEAM AND PENETRATION SEALANT.
VOC CONTENT: <17G/L.WWW.SEAL-BOND.COM

SONOLASTIC NP 1 ELASTOMERIC POLYURETHANE SEALANT.
VOC CONTENT: 43G/L. WWW.BUILDINGSYSTEMS.BASF.COM

PECORA AC-20 ACRYLIC LATEX SEALANT.
VOC CONTENT: 31 G/L. WWW.PECORA.COM

RCD CORP. #20 CLEAR ACRYLIC ADHESIVE SEALANT.
VOC CONTENT: <10 G/L. WWW.RCDMASTICS.COM

ADHESIVE AND SEALANTS. DEEP PENETRATIONS MUST BE CONTROLLED BY THE USE OF BACK-UP FILLER MATERIAL; SEE SEALANT MANUFACTURER'S RECOMMENDATIONS FOR THESE REQUIREMENTS.

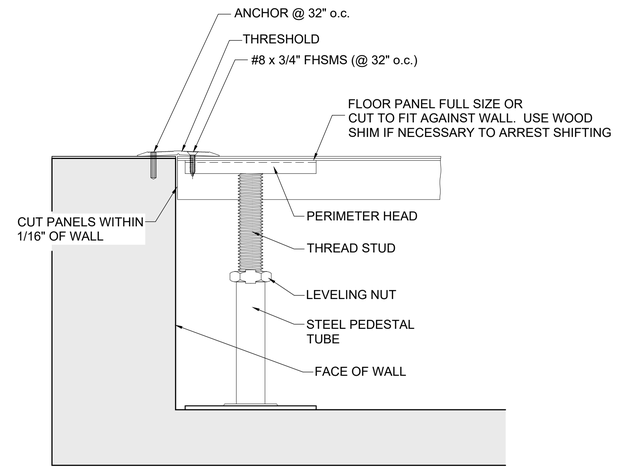

A-5 TRANSITION BETWEEN FLOOR SURFACES OTHER THAN CARPET
NTS

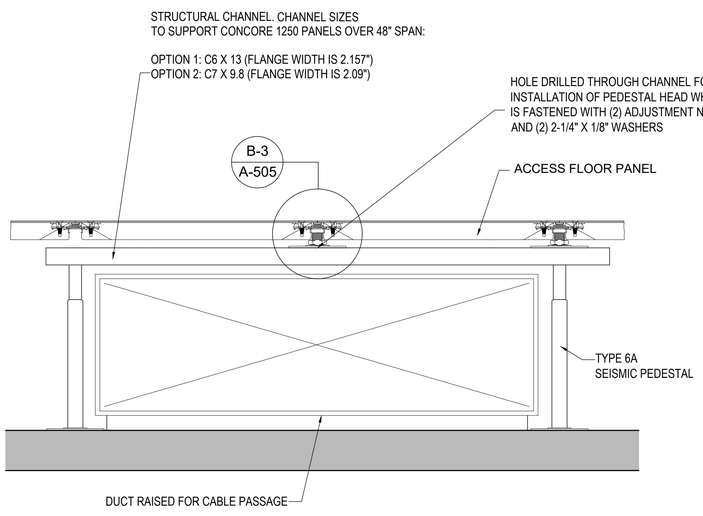

A-1 BRIDGING OVER DUCT ON SUBFLOOR SIDE VIEW
NTS

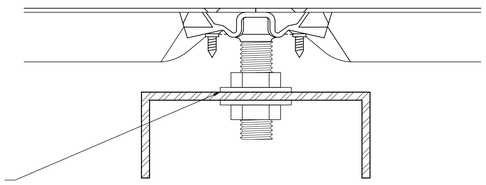

B-3 DETAIL END VIEW OF CHANNEL
NTS

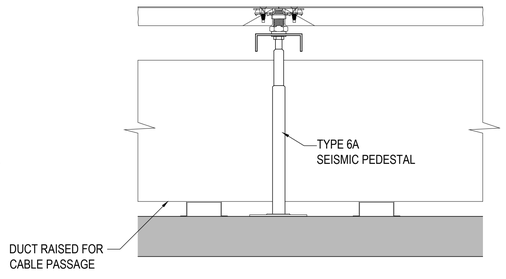

A-3 BRIDGING OVER DUCT ON SUBFLOOR END VIEW
NTS

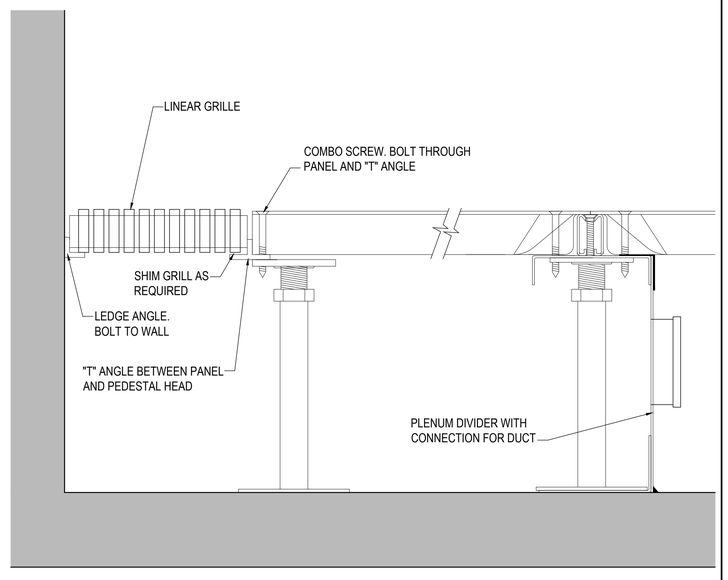

A-4 LINEAR GRILLE PERIMETER DETAIL
NTS

MERIDIEN GROUP
MERIDIEN GROUP, LLC
208 SOUTH KING ST. SUITE 303
LEESBURG, VA 20175
(703) 777-8285
www.meridiengroupllc.com

CITADEL DCA
ARCHITECTURE | HISTORIC PRESERVATION | PLANNING | DESIGN

CERTIFICATIONS

KEY PLAN

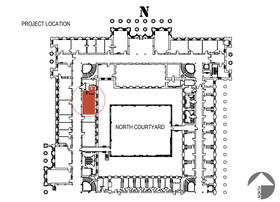

REVISION NOTES

MARK	DATE	DESCRIPTION

GRAPHIC SCALE

CAUTION: IF THIS DRAWING IS A REDUCTION THIS GRAPHIC SCALE MUST BE USED

CAUTION: IF THIS DRAWING IS A REDUCTION THIS GRAPHIC SCALE MUST BE USED

CONTRACTORS	A/E CON. NO.	
	A/E TASK NO.	
	CONS. CONTR	
	CONS. WORK	
	PRIME A/E	MERIDIEN GROUP / CITADEL DCA
	SUB A/E	
BUILDING	NAME	
	STREET	
	CITY/ST./ZIP	WASHINGTON, DC
	BUILDING NO.	DC-
	OTHER BUILDING NOs.	
	FACILITY CODE	
PROJECT	PROJECT TITLE	FEDERAL OFFICE BUILDING MT 2453 OFFICE RENOVATION
	PROJECT DESCRIPTION	RENOVATION OF SECOND FLOOR SUITE
	PROJECT NO.	MT2453_26_004
	GSA PM	BARBARA CHOATE
	SUBMISSION	100% SUBMISSION FOR REVIEW
	SUB. DATE	28 APRIL 2026
DRAWING	DRAWING TITLE	FLOOR SYSTEM DETAILS
	FILE NAME	
	FLOOR NO.	2ND FLOOR
	DRAWN BY	AGF DATE DRAFTED: 04/14/2026
	CHECKED BY	LSP SHEET SIZE: 24 x 36
	DRAWING NO.	A-502
		DISCIPLINE SHEET TYPE SEQUENCE
		SHEET 17 OF 21

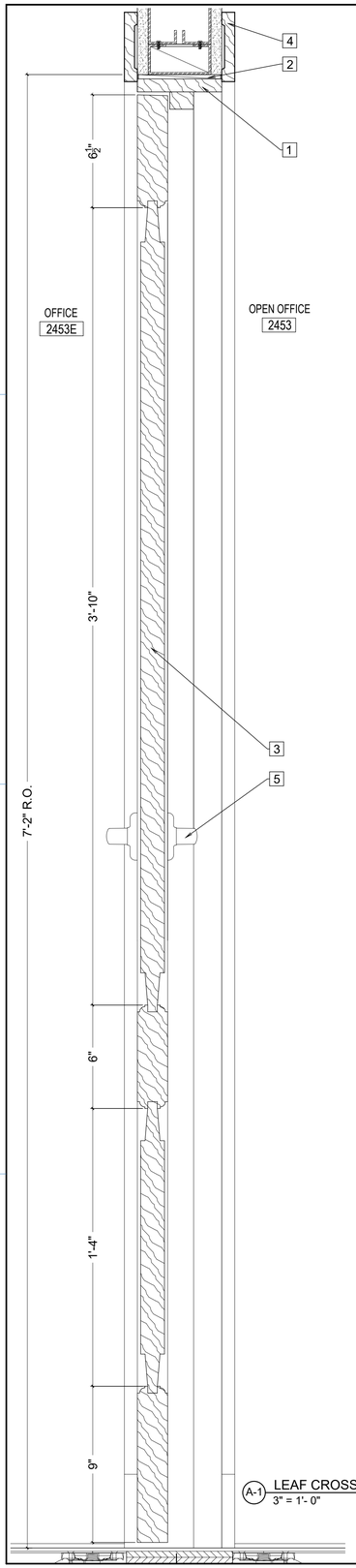

A-1 LEAF CROSS SECTION / DETAIL A
3" = 1'- 0"

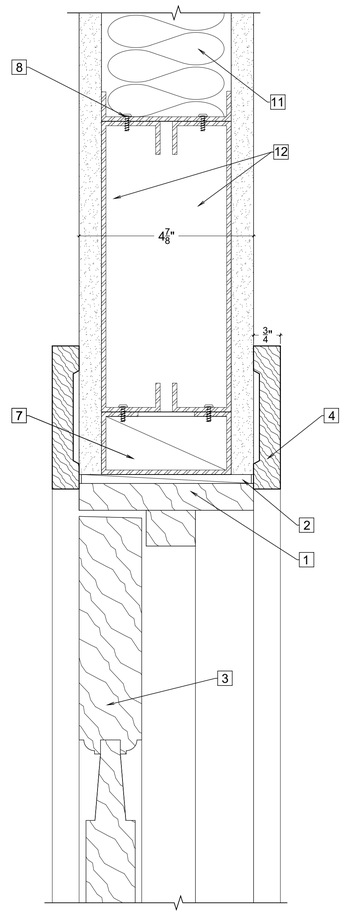

B-2 HEAD DETAIL B
6" = 1'- 0"

WOOD FRAME FOR WOOD DOOR **FRAME TYPE F-1**

TWO-PANEL WOOD DOOR **DOOR TYPE A**

KEY NOTES

1. 3/4" HARDWOOD FRAME. INSTALL FRAME PLUMB AND SQUARE. APPLY P-2 FINISH
2. 1/2" SHIM SPACE
3. DOOR LEAF CONSISTING OF HARDWOOD STILES, RAILS AND RAISED PANELS. PROFILE AND SIZE TO MATCH DOOR 2453-B. APPLY P-2 FINISH
4. 3/4" FLAT POPLAR CASING TO MATCH IN WIDTH THE CASING OF DOOR 2453-B. APPLY P-2 FINISH
5. HARDWARE TYPE 1 AS PER HARDWARE SCHEDULE
6. 4 1/2" HINGES AS PER HARDWARE SCHEDULE
7. 3 5/8" 16GA HEADER TRACK W/ PT PLATE (WOOD BLOCKING) TO FASTEN DOOR FRAME. BEVEL OR TRIM PLATE AS NEEDED
8. TRACK FOR CRIPPLE STUD ATTACHMENT. USE (2) SCREWS AS PER MANUF. SPEC. @ 16" O.C.
9. 3 5/8" 16GA JACK STUD W/ PT STUD (BEVEL AS NEEDED TO INSERT) TO ATTACH FRAME AND CASING
10. 3 5/8" 16GA KING STUD (FULL LENGTH)
11. WALL TYPE B
12. (2) 8" 14 GA CONTINUOUS HEADER. SEE FRAMING DETAILS A-501.

LEGEND

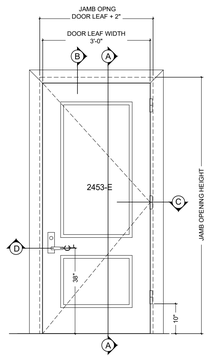

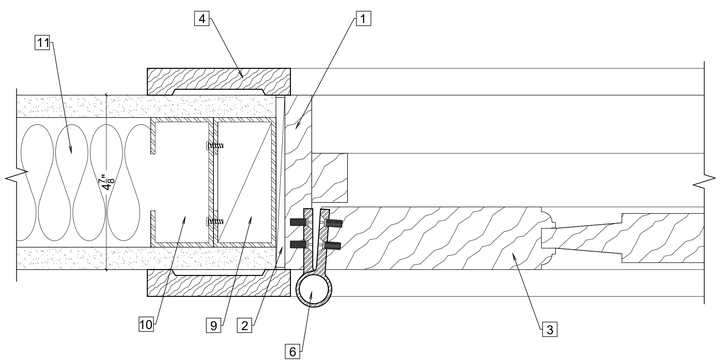

A-2 INSTALLATION OF THE WOOD FRAME & TWO-PANEL WOOD DOOR / JAMB DETAIL C
6" = 1'- 0"

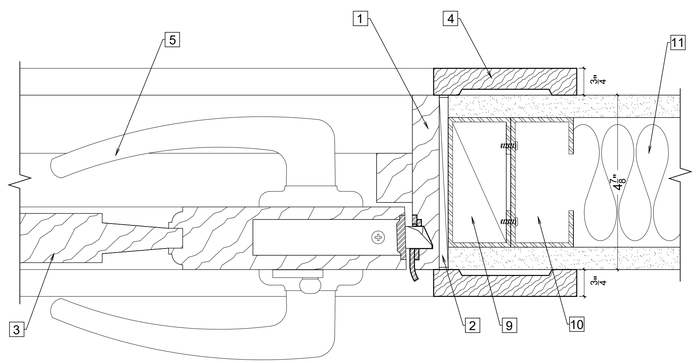

A-4 INSTALLATION OF THE WOOD FRAME & TWO-PANEL WOOD DOOR / JAMB DETAIL D
6" = 1'- 0"

MERIDIEN GROUP

MERIDIEN GROUP, LLC
208 SOUTH KING ST. SUITE 303
LEESBURG, VA 20175
(703) 777-8285
www.meridiengroupllc.com

CITADEL
ARCHITECTURE | HISTORIC PRESERVATION | PLANNING | DESIGN

CERTIFICATIONS

KEY PLAN

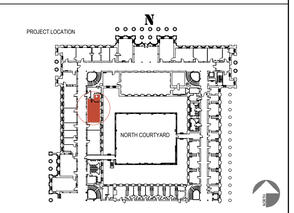

REVISION NOTES

MARK	DATE	DESCRIPTION

GRAPHIC SCALE

6" =1'-0" 0 1" 2" 3" 4" 5" 6"

3" =1'-0" 0 1" 2" 3" 4" 5" 6" 7" 8" 9" 10" 11" 1'

CAUTION: IF THIS DRAWING IS A REDUCTION THIS GRAPHIC SCALE MUST BE USED

CONTRACTORS	A/E CON. NO.	CAUTION: IF THIS DRAWING IS A REDUCTION THIS GRAPHIC SCALE MUST BE USED
	A/E TASK NO.	
	CONS. CONTR	
	CONS. WORK	
	PRIME A/E	MERIDIEN GROUP / CITADEL DCA
	SUB A/E	
BUILDING	NAME	
	STREET	
	CITY/ST./ZIP	WASHINGTON, DC
	BUILDING NO.	DC-
	OTHER	
	BUILDING NOs.	
	FACILITY CODE	
PROJECT	PROJECT TITLE	FEDERAL OFFICE BUILDING MT 2453 OFFICE RENOVATION
	PROJECT DESCRIPTION	RENOVATION OF SECOND FLOOR SUITE
	PROJECT NO.	MT2453_26_004
	GSA PM	BARBARA CHOATE
	SUBMISSION	100% SUBMISSION FOR REVIEW
	SUB. DATE	28 APRIL 2026
DRAWING	DRAWING TITLE	DOOR DETAILS
	FILE NAME	
	FLOOR NO.	2ND FLOOR
	DRAWN BY	AGF DATE DRAFTED: 04/14/2026
	CHECKED BY	LSP SHEET SIZE: 24 x 36
	DRAWING NO.	A-503
		DISCIPLINE SHEET TYPE SEQUENCE
		SHEET 18 OF 21

FINISH NOTES

GENERAL

1. ALL FINISHES SHALL BE APPLIED IN CONFORMANCE WITH THE MANUFACTURER'S RECOMMENDATIONS AND INSTRUCTIONS. A COPY OF THE RECOMMENDATIONS AND INSTRUCTIONS SHALL BE SUBMITTED TO THE DESIGNER PRIOR TO THE INSTALLATION OF MATERIALS.
2. INSPECT, PATCH AND REPAIR AS NECESSARY ALL WALL CONSTRUCTION AND SURFACES TO RECEIVE NEW FINISHES. PREPARE FOR INSTALLATION OF FINISHES IN ACCORDANCE WITH MANUFACTURER'S SPECIFICATIONS AND RECOMMENDATIONS.
3. UNLESS OTHERWISE NOTED, ALL PAINT, PAINTING AND PRIMING FOR WALL COVERINGS ARE TO BE FURNISHED AND INSTALLED BY THE CONTRACTOR.
4. PAINT ALL UNFINISHED MATERIALS, GRILLES, REGISTERS, ETC TO MATCH ADJACENT WALLS. MATERIALS WITH A NATURAL FINISH, SUCH AS ANODIZED ALUMINUM, SHALL BE LEFT IN THEIR NATURAL FINISH UNLESS OTHERWISE NOTED BY THE CONSTRUCTION DOCUMENTS.
5. APPLY ONE PRIMER COAT AND TWO FINISH COATS ON ALL SURFACES TO BE PAINTED. (LEVEL 4)
6. PREPARE FLOOR FOR INSTALLATION OF FINISHES IN ACCORDANCE WITH THE MANUFACTURER'S SPECIFICATIONS AND RECOMMENDATIONS. REMOVE ALL FOREIGN MATTER, GREASE, WAX, PAINT, OIL, ADHESIVES, DIRT, ETC. CUT OFF ANY PROTRUDING OBJECTS AND GRIND SMOOTH TO LEVEL WITH THE FLOOR SURFACE.
7. LEVEL ALL FLOOR SURFACES WITH A CEMENTITIOUS, SELF-LEVELING COMPOUND SIMILAR TO ARDEX K15. MINIMUM THICKNESS = 1/8". SEE SPECS.
8. VERIFY THE LOCATION OF ALL EXISTING FLOOR PENETRATIONS AND FILL WITH FIRE SAFE MATERIAL AND COMPOUND TO LEVEL WITH EXISTING FINISH FLOOR AS REQUIRED FOR 2 HOUR FIRE SEPARATION.
9. INSPECT FLOOR CONSTRUCTION AND SURFACES TO RECEIVE NEW FINISHES AND PROMPTLY NOTIFY THE ARCHITECT OF ANY DEFECTS IN THE SUBSTRATE THAT AFFECT THE WORK SO THAT THEY MAY BE CORRECTED BEFORE THE START OF WORK.
10. INSTALL FLOORING MATERIALS WITHIN THE ALLOWABLE TEMPERATURE RANGE AS STATED BY THE MANUFACTURER'S INSTALLATION INSTRUCTIONS. ALL FLOORING MATERIAL SHALL BE DELIVERED TO THE SITE IN TIME TO ACCLIMATE TO CONDITIONS PRIOR TO INSTALLATION. SUBMIT A COPY OF THE INSTALLATION INSTRUCTIONS TO THE ARCHITECT AND THE OWNER.
11. ALL CHANGES IN FLOOR MATERIAL AND COLORS SHALL OCCUR AT THE CENTERLINE OF DOORWAYS UNLESS OTHERWISE NOTED.
12. WHERE ELECTRICAL WORK IS SPECIFIED, LAMPS AND FIXTURES SHALL BE PROVIDED BY THE ELECTRICAL CONTRACTOR, AS WELL AS CUTOUTS FOR SWITCHES, OUTLETS AND WIRING DEVICES FOR SAME, AS REQUIRED.
13. DURING PROGRESS OF WORK MAINTAIN PREMISES FREE OF NECESSARY ACCUMULATION OF TOOLS, EQUIPMENT, SURPLUS MATERIALS, AND DEBRIS.
14. ALL INTERIOR ROOMS AND ENCLOSED SPACES FINISHES SHALL HAVE A MIN. CLASS "C" RATING WITH A FLAME SPREAD 76-200, SMOKE DEVELOPED 0-450, IN ACCORDANCE WITH THE 2024 IBC-CHAPTER 8 (INTERIOR FINISHES).

PAINT

1. CONTRACTOR TO FURNISH ALL MATERIAL, EQUIPMENT AND SERVICES NECESSARY FOR AND INCIDENTAL TO THE PAINTING AND APPLICATION COMPLETE OF ALL FIELD PAINTING SYSTEMS. THE TERM "PAINT" INCLUDES PAINT, ENAMELS, SEALERS, FILLERS, AND OTHER TYPES OF COATINGS WHETHER USED AS PRIMERS OR IMMEDIATE AND FINISH COATS.
2. CONTRACTOR TO EXAMINE THE CONTRACT DRAWINGS & SPECIFICATIONS AND THOROUGHLY FAMILIARIZE HIMSELF W/ ALL PROVISIONS REGARDING REQUIRED PAINTING OF WORK.
3. EXAMINE SURFACES SCHEDULED TO RECEIVE PAINT AND FINISHES FOR CONDITIONS THAT WILL ADVERSELY AFFECT EXECUTION THROUGH PREPARATORY WORK.
4. CLEAN ALL SURFACES TO BE PAINTED AS REQUIRED TO REMOVE DUST AND DIRT. SAND AS NECESSARY WALL SURFACES.
5. DO NOT PROCEED WITH SURFACE PREPARATION OR COATING APPLICATIONS UNTIL CONDITIONS ARE SUITABLE. REPORT ANY CONDITIONS THAT MAY POTENTIALLY AFFECT PROPER APPLICATION.
6. BEFORE APPLYING SUCCEEDING COATS, PRIMERS AND UNDERCOATS SHALL BE COMPLETELY INTEGRAL AND SHALL PERFORM THE FUNCTION FOR WHICH THEY ARE SPECIFIED. PROPERLY PREPARE AND TOUCH UP ALL SCRATCHES, ABRASIONS OR OTHER DISFIGUREMENTS AND REMOVE ANY FOREIGN MATTER BEFORE PROCEEDING WITH THE FOLLOWING COAT. ALL SPOT-PRIMING OR SPOT-COATING SHALL BE FEATHER EDGED INTO ADJACENT COATINGS TO PRODUCE A SMOOTH AND LEVEL SURFACE.
7. REMOVE OR PROTECT HARDWARE, PLATES, TRIM FOR MECHANICAL WORK, LIGHTING FIXTURES AND REPLACE AND RECONNECT. REPLACE ELECTRICAL PLATES, HARDWARE, LIGHT FIXTURE TRIM, AND FITTINGS REMOVED PRIOR TO FINISHING.
8. DISCONNECT EQUIPMENT ADJACENT TO WALLS, WHERE NECESSARY, AND MOVE TO PERMIT PAINTING OF TO PROPERLY PREPARE SURFACES TO RECEIVE PAINT
9. COR WILL PROVIDE THE CONTRACTOR W/ PAINT CHIPS, IF REQUIRED, FOR VERIFICATION.
10. ALL PAINT SHALL BE APPLIED IN ACCORDANCE WITH MANUFACTURER'S SPECIFICATIONS FOR THE PARTICULAR SURFACE.
11. SHELLAC AND SPOT PRIME WITH INDUSTRY ACCEPTED "STAIN KILLERS" ANY MARKS WHICH MAY BLEED THROUGH SURFACE FINISHES.
12. ALL METAL SURFACES SHALL BE PROPERLY PREPARED PRIOR TO THE APPLICATION OF PAINT.
13. ALL PAINT FINISHES OF METAL PARTS OF FRAME, DOORS, PERIMETER ENCLOSURES, ETC. SHALL BE SEMI-GLOSS UNLESS OTHERWISE NOTED.
14. ALL DOORS SHALL RECEIVE SAME FINISH ON BOTH SIDES UNLESS OTHERWISE NOTED.
15. LABEL EACH CONTAINER WITH COLOR, ROOM LOCATIONS & PRODUCT DESCRIPTION IN ADDITION TO THE MANUFACTURER'S LABEL.
16. REPAIR ALL SURFACE DEFECTS IN GYPSUM DRYWALL JOINT FINISHING COMPOUND OR SPACKLING COMPOUND FILLED OUT FLUSH AND SANDED SMOOTH. CLEAN ALL SURFACES AND TAPE JOINTS OF DUST, DIRT AND OTHER CONTAMINANTS AND BE SURE THEY ARE THOROUGHLY DRY BEFORE APPLYING PAINT.
17. REPAIR DAMAGE TO OTHER SURFACES CAUSED BY WORK OF THIS SECTION.
18. REMOVE EMPTY PAINT CONTAINERS FROM THE WORK SITE. PLACE PAINT OR SOLVENT SOAKED RAGS, WASTE, OR OTHER MATERIALS WHICH MIGHT CONSTITUTE A FIRE HAZARD IN METAL CONTAINERS AND REMOVE FROM PREMISES AT THE END OF EACH DAY'S WORK TAKE EVERY PRECAUTION TO AVOID DAMAGE BY FIRE.
19. AS WORK PROCEEDS, PROMPTLY REMOVE PAINT WHERE SPILLED, SPLASHED, OR SPLATTERED.
20. ADEQUATE LIGHTING MUST BE AVAILABLE PRIOR TO THE APPLICATION OF ANY PAINT COATING TO APPROXIMATE 80 FOOT CANDLES MEASURED MID-HEIGHT AT SUITABLE SURFACE.
21. APPLY PAINT AND ENAMEL W/ SUITABLE BRUSHES, ROLLERS OR SPRAY EQUIPMENT WHICH HAS BEEN KEPT CLEAN, FREE FROM CONTAMINATION AND SUITABLE FOR FINISH REQUIRED.
22. RATE OF APPLICATION OF COATING SHALL NOT EXCEED THAT AS RECOMMENDED BY THE PAINT MANUFACTURER FOR THE PURPOSE AND SURFACE INVOLVED.
23. COMPLY FOR REQUIRED DRYING TIME BETWEEN COATS AS DIRECTED BY MANUFACTURER.
24. SAND DUST BETWEEN EACH COAT TO REMOVE DEFECTS VISIBLE FROM 5 FEET. FINISH COATS SHALL BE SMOOTH, FREE FROM DUST MARKS, STREAKS, LAPS, SAGS, SKIPS, HOLIDAYS, ETC.
25. SHOP PRIMED STEEL SURFACES SAND AND SCRAPE TO REMOVE LOOSE PRIMER AND RUST. FEATHER EDGES TO MAKE TOUCH UP PATCHES INCONSPICUOUS. CLEAN SURFACES WITH SOLVENT.
26. SEAL TOP AND BOTTOM EDGES OF DOORS SCHEDULED FOR PAINTING WITH PRIMER. PROTECT THE WORK OF OTHER TRADES AGAINST DAMAGE OR INJURY BY USE OF SUITABLE COVERINGS DURING THE PROGRESS OF THE PAINTING AND FINISHING WORK.
27. DO NOT APPLY ADDITIONAL PAINT COATS UNTIL COMPLETED SURFACE HAS BEEN INSPECTED AND APPROVED BY THE COR. ONLY INSPECTED COATS OF PAINT WILL BE CONSIDERED IN DETERMINING NUMBER OF COATS APPLIED.
28. MAKE EDGES OF PAINT ADJOINING OTHER MATERIAL OR COLORS CLEAN AND SHARP WITH NO OVERLAPPING.
29. CHANGE COLORS AT DOOR STOP CORNERS WHERE COLORS DIFFER BETWEEN ADJOINING SPACES OR ROOMS AND WHERE DOOR FRAMES MATCH WALL COLORS.
30. REFINISH WHOLE WALL WHERE PORTION OF FINISH HAS BEEN DAMAGED OR IS NOT ACCEPTABLE.
21. PAINT EXPOSED SIDES AND EDGES OF PLYWOOD BACKBOARDS FOR ELECTRICAL & TELEPHONE EQUIPMENT BEFORE INSTALLING EQUIPMENT.
31. SAMPLES OF ALL FINISH COLORS SPECIFIED SHALL BE SUBMITTED FOR APPROVAL TO COR PRIOR TO THE COMMENCEMENT OF WORK
32. THE CONTRACTOR SHALL BE HELD RESPONSIBLE FOR THE FINISHED APPEARANCE AND SATISFACTORY COMPLETION OF HIS WORK, AND THEREFORE, HE SHALL NOT COMMENCE ANY PAINTING UNTIL SURFACES TO BE FINISHED ARE IN PROPER CONDITION IN EVERY RESPECT.
33. CONFORM TO APPLICABLE STATE, COUNTY, AND CITY CODES FOR FLAME/FUEL/SMOKE RATING REQUIREMENTS FOR FINISHES.

INSTALLATION TOLERANCES

1. VARIATION FROM PLUMB: FOR VERTICAL JOINTS, EXTERNAL CORNERS, AND OTHER CONSPICUOUS LINES,DO NOT EXCEED 1/8 INCH IN 8 FEET.
2. VARIATION IN LEVEL: FOR HORIZONTAL JOINTS AND OTHER CONSPICUOUS LINES, DO NOT EXCEED $\frac{1}{4}$ INCH IN 20 FEET, OR 1/2 INCH MAXIMUM.
3. VARIATION IN SURFACE PLANE OF FLOORING: DO NOT EXCEED 1/8 INCH IN 10 FEET FROM LEVEL OR SLOPE INDICATED WHEN TESTED WITH A 10-FOOT STRAIGHT EDGE.
4. VARIATION IN PLANE BETWEEN ADJACENT UNITS (LIPPING): DO NOT EXCEED 1/64 INCH BETWEEN FACES OF ADJACENT UNITS AS MEASURED FROM A STRAIGHT EDGE PARALLEL TO TILED SURFACE.
5. VARIATION IN JOINT WIDTH: DO NOT VARY JOINT THICKNESS MORE THAN 1/16 INCH OR ONE-FOURTH OF NOMINAL JOINT WIDTH, WHICHEVER IS LESS.
6. REMOVE AND REPLACE MATERIAL THAT IS STAINED OR OTHERWISE DAMAGED THAT DOES NOT MATCH ADJOINING TILE. PROVIDE NEW MATCHING UNITS, INSTALLED AS SPECIFIED AND IN A MANNER TO ELIMINATE EVIDENCE OF REPLACEMENT.

FINAL CLEANING

- PROVIDE FINAL CLEANING OF THE WORK, AT TIME INDICATED, CONSISTING OF CLEANING EACH SURFACE OR UNIT OF WORK TO NORMAL "CLEAN" CONDITIONS EXPECT FOR A FIRST CLASS BUILDING CLEANING MAINTENANCE PROGRAM. THE FOLLOWING ARE EXAMPLES, BUT NOT IN ANY WAY A LIMITATION, OF CLEANING LEVELS REQUIRED:
- REMOVE LABELS WHICH ARE NOT REQUIRED AS PERMANENT LABELS.
- CLEAN TRANSPARENT MATERIALS, INCLUDING MIRRORS AND WINDOW/DOOR GLASS, TO A POLISHED CONDITIONS, REMOVING SUBSTANCES WHICH ARE NOTICEABLE AS VISION-OBSCURING MATERIALS.
- CLEAN EXPOSED EXTERIOR AND INTERIOR HARD-SURFACE FINISHES TO A DIRT-FREE CONDITION, FREE OF DUST, STAINS, FILMS AND SIMILAR NOTICEABLE DISTRACTING SUBSTANCES. RESTORE REFLECTIVE SURFACES TO ORIGINAL REFLECTIVE CONDITION.
- REMOVE DEBRIS AND SURFACE DUST FROM LIMITED-ACCESS SPACES INCLUDING PLENUMS, AND SIMILAR SPACES.
- VACUUM CLEAN CARPETED SURFACES AND SIMILAR SOFT SURFACES.
- CLEAN LIGHT FIXTURES, LAMPS AND DIFFUSERS SO AS TO FUNCTION WITH FULL EFFICIENCY.
- WIPE CLEAN ANY VENETIAN BLINDS OR OTHER WINDOW TREATMENTS.

ROOM FINISH SCHEDULE

FINISHES SCHEDULE

CODE	TYPE		MATERIAL	MANUFACTURER	NUMBER	NAME	STYLE / COLOR	SIZE / APPLICATION	DESCRIPTION/REMARKS	
P-1	PAINT	EXISTING WALLS NEW WALLS	AURA Interior Paint- EGGSHELL (524)	BENJAMIN MOORE OR SHERWIN WILLIAMS	BUILDING STANDARD COLOR FOR WALLS		EGGSHELL	PRIMER (2) FINISH COATS	MILDEW RESISTANT PAINT AND PRIMER TOGETHER ZERO VOC, LOW ODOR	
P-2	PAINT	EXISTING DOOR CASING, BASEBOARD, WINDOW TRIM & SIDE PANELS NEW DOOR CASING, DOOR LEAVES & BASEBOARD	AURA Interior Paint- SEMI-GLOSS (N528)	BENJAMIN MOORE OR SHERWIN WILLIAMS	OC-17 **SW-7005**	PURE WHITE PURE WHITE	SEMI GLOSS	PRIMER: SELF PRIMING or Fresh Start® High-Hiding All Purpose Primer (046) or Fresh Start Under-coater and Primer/Sealer (032) (2) FINISH COATS SAND BETWEEN COATS	• Cleanup: Soap and Water • Resin Type: Proprietary 100% Acrylic • MPI Rating: 054, 141 • VOC Level: 2.8 • CDPH Emissions Certified • Pigment Type Titanium Dioxide • Volume Solids 36.5%	• Coverage per Gallon at Recom. Film Thickness 400 – 450 Sq. Ft. • Dry Time @ 77 °F (25 °C) @ 50% RH To Touch 1 Hour | To Recoat 1 Hour
P-3	PAINT	EXISTING CEILING, CROWN MOLDING AND VAULTS' RIBS	WATERBORNE CEILING PAINT Ultra Flat (508)	BENJAMIN MOORE OR SHERWIN WILLIAMS	BUILDING STANDARD COLOR FOR CEILING		FLAT	PRIMER: Fresh Start® High-Hiding All Purpose Primer (046) or Fresh Start® Multi-Purpose Latex Primer (N02) (2) FINISH COATS	• CLEANUP: SOAP AND WATER • ZERO VOC • ANTI-MICROBIAL - antimicrobial additives inhibit the growth of mold and mildew on the surface of the paint film • Eligible for LEED® v4 Credit • Qualifies for CHPS low emitting credit	• RESIN TYPE: ACRYLIC LATEX • Pigment Type Titanium Dioxide • Volume Solids 36.5% • Coverage per Gallon at Recom. Film Thickness 400 – 450 Sq. Ft. • Dry Time @ 77 °F (25 °C) @ 50% RH To Touch 1 Hour | To Recoat 1 -2 Hours
P-4	PAINT	FAN COIL UNITS MILLWORK	AURA Interior Paint- SEMI-GLOSS (N528)	BENJAMIN MOORE OR SHERWIN WILLIAMS	BUILDING STANDARD COLOR FOR FCU CABINETS		SEMI GLOSS			
CA-1	NEW DOOR CASING		POPLAR CLEAR	3/4" x FLAT (MATCH EXISTING)					3/4" POPLAR CLEAR / PAINTED	
B-1	NEW WOOD BASE		POPLAR CLEAR	3/4" x FLAT (MATCH FLAT SECTION OF ORIGINAL BASE)					3/4" POPLAR CLEAR / PAINTED	
C-1	CARPET TILE		OZ/ YD²	SHAW INDUSTRIES INC	5T007 / SCULPT / EW24		STYLE: 314110 COLOR: 83761 CLAY	24" x 24" / QUARTER TURN	• GLUE DOWN INSTALLATION • SCRAPE & REMOVE GLUE AND DEBRIS PRIOR TO INSTALLATION • LEVEL FLOOR PRIOR TO INSTALLATION	

MERIDIEN GROUP

MERIDIEN GROUP, LLC
208 SOUTH KING ST. SUITE 303
LEESBURG, VA 20175
(703) 777-8285
www.meridiengroupllc.com

DCA CITADEL
ARCHITECTURE | HISTORIC PRESERVATION | PLANNING | DESIGN

CERTIFICATIONS

KEY PLAN

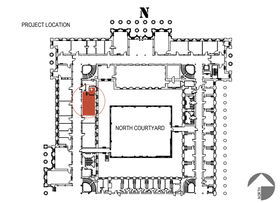

REVISION NOTES

MARK	DATE	DESCRIPTION

GRAPHIC SCALE

CAUTION: IF THIS DRAWING IS A REDUCTION THIS GRAPHIC SCALE MUST BE USED

CAUTION: IF THIS DRAWING IS A REDUCTION THIS GRAPHIC SCALE MUST BE USED

CONTRACTORS	
A/E CON. NO.ᴬ	
A/E TASK NO.	
CONS. CONTR	
CONS. WORK	
PRIME A/E	MERIDIEN GROUP / CITADEL DCA
SUB A/E	
BUILDING	
NAME	
STREET	
CITY/ST./ZIP	WASHINGTON, DC
BUILDING NO.	DC-
OTHER	
BUILDING NOs.	
FACILITY CODE	
PROJECT	
PROJECT TITLE	FEDERAL OFFICE BUILDING MT 2453 OFFICE RENOVATION
PROJECT DESCRIPTION	RENOVATION OF SECOND FLOOR SUITE
PROJECT NO.	MT2453_26_004
GSA PM	BARBARA CHOATE
SUBMISSION	100% SUBMISSION FOR REVIEW
SUB. DATE	28 APRIL 2026
DRAWING	
DRAWING TITLE	FINISHES NOTES AND SCHEDULE
FILE NAME	
FLOOR NO.	2ND FLOOR
DRAWN BY	AGF DATE DRAFTED: 04/14/2026
CHECKED BY	LSP SHEET SIZE: 24 x 36
DRAWING NO.	A-601
	DISCIPLINE SHEET TYPE SEQUENCE
	SHEET 19 OF 21

ROOM FINISHES SCHEDULE

NO.	ROOM	WALL		FLOOR	BASE			CASING				DOOR			CEILING		FCU MILLWORK
		EXISTING	NEW		EXISTING	NEW		EXISTING / FINISH		NEW DOOR		EXISTING	NEW		EXISTING	HEIGHT	EXISTING
						TYPE	FINISH	WINDOW	DOOR	TYPE	FINISH		TYPE	FINISH			
2453	OPEN OFFICE	P-1	P-1	C-1	P-2	BB-1	P-2	P-2	P-2	——	——	P-2	——	——	P-3	± 14'-2"	P-4
2453-E	OFFICE	P-1 PLASTER P-2 PANELING	P-1	C-1	P-2	BB-1	P-2	P-2	——	CA-1	P-2	——	FRAME F-1 LEAF A	P-2	P-3	± 14'-2"	P-4

DOOR SCHEDULE

NO.	ROOM	OPENING R.O.	FRAME								LEAF						HARDWARE	CARD READER	CASING	
			TYPE	H	W	T	JAMBS / HEAD	MATERIAL	RABBETS/ STOP	FINISH	TYPE	H	W	T	MATERIAL	FINISH			TYPE	FINISH
2453-E	OFFICE	3'-2" x 7'-2"	F-1	7'-1"	3'-1"	3/4"	4 7/8"	WOOD	S	P-2	A	7'-0"	3'-0"	1 3/4"	2-PANEL WOOD	P-2	TYPE 1	NO	CA-1	P-2

HARDWARE SCHEDULE

HARDWARE SET TYPE 1			
DOOR SIZE / TYPE	3'-0" x 7'-0" x 1 3/4" / 1 LEAF- 2-PANEL WOOD		
HINGES 1 1/2 PAIR	BB-1168 41/2 x 4 1/2	BRIGHT BRASS US 3	HAGAR
LEVER ENTRANCE SET	ML 2053 / CITATION CSN	BRIGHT BRASS US 3	CORBIN RUSSWIN
CYLINDER CORE & IC CORE HOUSING	LARGE FORMAT IC CORE (TREASURY SPEC)	BRIGHT BRASS US 3	
SILENCERS	609	GRAY	ROCKWOOD

DOOR ASSEMBLY ELEVATIONS

FRAME TYPE F-1

WOOD FRAME STAIN GRADE / FINISH P-2

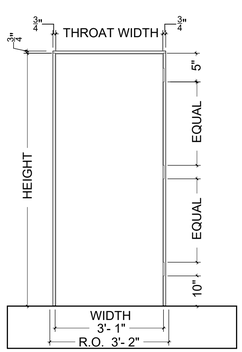

WOOD FRAME
FOR WOOD DOORS

- 3/4" Thick wood frame
- Hinge prepared

LEAF TYPE A

2-PANEL WOOD DOOR STAIN GRADE / FINISH P-2

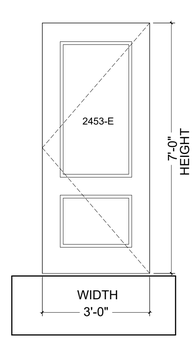

- 2-Panel wood door 1 3/4" Thick
- Stain grade
- Hinge prepared
- Hardwood stiles and rails
- Adhesives contain no formaldehyde

DOOR SIZE, PANELS, & MOLDING PROFILES TO MATCH EXISTING 2453-B

HARDWARE TYPE 1

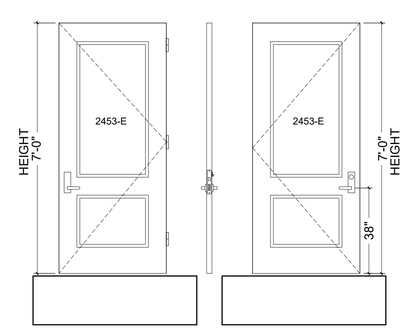

- Entrance / Office type
- Corbin Russwin Series ML 2051
- ANSI No. F01
- Finish US 3 - ANSI / BHMA 605 Bright Brass
- Latchbolt by key when outside grip locked by toggle action stop
- Latchbolt by grip either side, unless outside grip is locked by toggle action stop
- Auxiliary latch deadlock latchbolt
- Inside grip always free
- INSTALL HARDWARE TO COMPLY W/ ADA / ABA

MERIDIEN GROUP

MERIDIEN GROUP, LLC
208 SOUTH KING ST. SUITE 303
LEESBURG, VA 20175
(703) 777-8285
www.meridiengroupllc.com

DCA CITADEL
ARCHITECTURE | HISTORIC PRESERVATION | PLANNING | DESIGN

CERTIFICATIONS

KEY PLAN

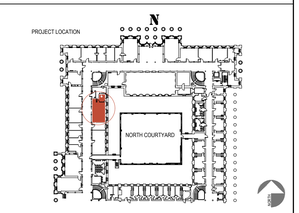

REVISION NOTES

MARK	DATE	DESCRIPTION

GRAPHIC SCALE

CAUTION: IF THIS DRAWING IS A REDUCTION THIS GRAPHIC SCALE MUST BE USED

CAUTION: IF THIS DRAWING IS A REDUCTION THIS GRAPHIC SCALE MUST BE USED

CONTRACTORS	A/E CON. NO.	
	A/E TASK NO.	
	CONS. CONTR	
	CONS. WORK	
	PRIME A/E	MERIDIEN GROUP / CITADEL DCA
	SUB A/E	
BUILDING	NAME	
	STREET	
	CITY/ST./ZIP	WASHINGTON, DC
	BUILDING NO.	DC-
	OTHER BUILDING NOs.	
	FACILITY CODE	
PROJECT	PROJECT TITLE	FEDERAL OFFICE BUILDING MT 2453 OFFICE RENOVATION
	PROJECT DESCRIPTION	RENOVATION OF SECOND FLOOR SUITE
	PROJECT NO.	MT2453_26_004
	GSA PM	BARBARA CHOATE
	SUBMISSION	100% SUBMISSION FOR REVIEW
	SUB. DATE	28 APRIL 2026
DRAWING	DRAWING TITLE	DOOR & HARDWARE SCHEDULES + ELEVATIONS
	FILE NAME	
	FLOOR NO.	2ND FLOOR
	DRAWN BY	AGF DATE DRAFTED: 04/14/2026
	CHECKED BY	LSP SHEET SIZE: 24 x 36
	DRAWING NO.	A-602
		DISCIPLINE SHEET TYPE SEQUENCE
		SHEET 20 OF 21

Stile & Rail Doors

HIGH-QUALITY & *Beautiful*

That's what you can expect with Eggers Stile & Rail Doors. Whether you're going for a classic, refined look or the perfect addition to a modern design, we can build a door to perfectly fit your project.

- Doors meet WDMA/AWS Custom Grade or Premium Grade quality standards
- Available with non-rated 20-, 45-, 60-, and 90-minute fire ratings
- Raised membrane pressed, raised rim-banded, flat, louver and glass panel options available
- Limited lifetime warranty for interior use
- Factory-machined to exact requirements for hardware
- WDMA TR-8 / AWS System 9 Water-based UV cured acrylated polyurethane is standard. Primed and opaque finishes also available
- Non-rated exterior doors available in Raised Rim Banded and Flat panels — contact your sales representative for more information
- Acoustical ratings up to STC 40
- All doors meet CARB ULEF standards. FSC® constructions available upon request, LEED® v4.4 contributions available
- Available with sketchface veneers, inlay and split species designs
- Standard 10" bottom rail meets ADA requirements

NON-RATED/20-MINUTE

RAISED MEMBRANE PRESSED PANEL

ACOUSTICAL

When sound reduction is required, VT acoustical doors are the perfect solution. Eggers Stile & Rail Collection acoustical doors are available with ratings ranging from STC 32 to STC 40. All VT acoustical doors are tested operable with gasketing.

FIRE RATINGS

VT fire-rated doors meet or exceed life safety requirements while maintaining the visual integrity of the door without sacrificing your design. VT's concealed intumescent provides the same seamless elegance as our non-rated doors. And they're available with ratings up to 90-minutes and double egress pairs.

Sticking, Panels, & Louvers

QUARTER-ROUND STICKING

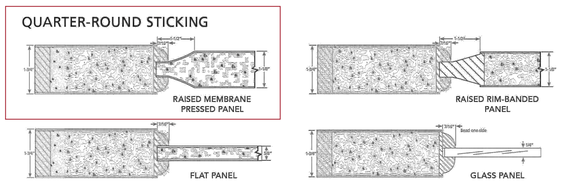

THICKNESS	Non-Rated		20-Minute		45-Minute		60-Minute		90-Minute	
	MIN	MAX	MIN	MAX	MIN	MAX	MIN	MAX	MIN	MAX
DOOR SINGLES	*Standard is 3'0"-7'0"*									
Door Size (W x H) 1-3/4"	2'-0" X 2'-0"	4'-0" X 10'-0"	2'-0" X 2'-0"	4'-0" X 10'-0"	2'-0" X 2'-0"	4'-0" X 8'-0" or 3'-6" X 9'-0"	2'-0" X 2'-0"	4'-0" X 8'-0" or 3'-6" X 9'-0"	2'-0" X 2'-0"	4'-0" X 7'-0" or 3'-6" X 8'-0"
Door Size (W x H) 1-3/8"	2'-0" X 2'-0"	3'-0" X 7'-0"	—	—	—	—	—	—	—	—
Door Size (W x H) 2-1/4"	2'-0" X 2'-0	4'-0" X 10'-0"	2'-0" X 2'-0"	4'-0" X 10'-0"	2'-0" X 2'-0"	4'-0" X 8'-0" or 3'-6" X 9'-0"	2'-0" X 2'-0"	4'-0" X 8'-0" or 3'-6" X 9'-0"	2'-0" X 2'-0"	4'-0" X 7'-0" or 3'-6" X 8'-0"
STILE & RAIL	*Standard Dimensions: Stile Face & Top Rail 6", Bottom Rail 10", Cross Rail/ Mullion 4"*									
Stile Face (width)	4-1/2"	13"	4-1/2"	13"	4-1/2"*	13"	4-1/2"*	13"	4-1/2"*	13"
Top Rail (width)	4-1/2"	13"	4-1/2"	13"	4-1/2"*	13"	4-1/2"*	13"	4-1/2"*	13"
Bottom Rail (width)	8"	13"	8-3/4"	13"	6" or 8" w/ Lites	13"	6" or 8" w/ Lites	13"	6" or 8" w/ Lites	13"
Cross Rail/Mullion (width)	2-1/2"	13"	2-1/2"	13"	4-1/2" or 6" pairs only	13"	4-1/2"	13"	4-1/2"*	13"
PANELS	*Raised Membrane Pressed is Standard*									
Raised Membrane Pressed	7" X 7"	38"X 92"	7" X 7"	36"X 92"	7" X 7"	39" X 82" X 1-3/8" 39" X 111" X 2-1/4"	4'-0" X 2'-0"	39" X 87" X 1-3/4"	4'-0" X 2'-0"	39" X 87" X 1-3/4"
Raised Rim-Banded	4-1/2" X 4-1/2"	36" X 119"	4-1/2" X 4-1/2"	36"X 92"	4-1/2" X 4-1/2"	39" X 82" X 1-3/8" or 39" X 111" X 2-1/4"	4'-0" X 2'-0"	39" X 87" X 1-3/4"	4'-0" X 2'-0"	39" X 87" X 1-3/4"
Flat	4-1/2" X 4-1/2"	36" X 119"	4-1/2" X 4-1/2"	36"X 92"	4-1/2" X 4-1/2"	39" X 82" X 1-3/8" 39" X 111" X 2-1/4"	4'-0" X 2'-0"	39" X 87" X 1-3/4"	4'-0" X 2'-0"	39" X 87" X 1-3/4"
Louver	6" X 6"	30" X 95"	Not Available							
MACHINING										
Mortise Locks	Stile minimum: 1-3/16" wider for panel door, 1-1/2" wider for doors with lites than depth of mortise pocket.				Stile minimum: 1-3/8" wider than depth of mortise pocket. 90-min must be lined with intumescent.					
Cylinder Locks/Deadbolt	Maximum 2-3/4" backset; Deadbolt Minimum 2-1/4" above lock CL to CL				Maximum 3-3/4" backset. Dead lock: Minimum 3-1/2" above lock CL to CL. Interconnected deadbolts not allowed.					
Concealed Closer	Body in door maximum cutout: 1-7/16" W x 24-3/4" L x 3-1/2" D. Minimum 4-7/8" stiles.				Track only, closer in frame, with engineering approval. UL 10C rated for composite doors. Maximum size = 26" L x 1-1/4" D x 1-3/8" W. Must be lined with intumescent.					
Automatic Flushbolt	Top and bottom bolts allowed		Top bolt only in no hose stream doors		Maximum cutout size: 1" wide X 8-1/2" long x 2" deep. Certain 60-min and 90-min must be lined with intumescent					

Corbin Russwin ASSA ABLOY

Trim Designs

ML2000, ML20900 ECL and ML20600 NAC Series

Citation
- Brass, bronze or stainless steel
- Laser engraving option
(See Custom Laser Engraving brochure)

Corbin Russwin ASSA ABLOY

Trim Designs

ML2000, ML20900 ECL and ML20600 NAC Series

CSM
Lever: Cast
Escutcheon: Wrought
Optional:
- Plug only to show; master ring
- Laser engraving on lever or escutcheon

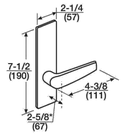

CSN
Lever: Cast
Escutcheon: Wrought
Optional: Laser engraving on lever

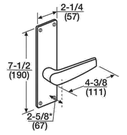

CSP
Lever: Cast
Escutcheon: Wrought
Optional: Laser engraving on lever
Note: P escutcheon is not compatible with ML20900 ECL or ML20600 NAC mortise locks

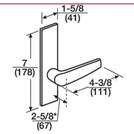

CSR
Lever: Cast
Escutcheon: Solid stainless steel; forged brass
Optional:
- Plug only to show
- Laser engraving on lever

Door thickness: 1-3/8" (35mm), 1-3/4" (44mm), 2-1/4" (57mm)
Note: R escutcheon is not available for functions ML2087 or ML20987

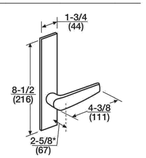

Corbin Russwin ASSA ABLOY

Functions

ML2000 Series

Outside	Inside	Function (ANSI No.)	Type	Function Description
A01		ML2048 (F08/F10)	Entrance or Apartment	• Latchbolt* by key outside or by grip either side, unless outside grip is locked by toggle-action stop. • Deadbolt by key outside or by thumbturn grip inside. • Inside grip free when deadbolt is retracted. • Non-panic release. • No simultaneous deadbolt and latch retraction. Note: Indicator shows deadbolt position only.
A01		ML2049	Storeroom Deadbolt	• Latchbolt and deadbolt by grip inside or by key outside. • Inside grip simultaneously retracts deadbolt and latchbolt. • Outside grip always rigid. • Deadbolt thrown or retracted by key outside or thumbturn grip inside. • Auxiliary latch deadlocks latchbolt. • Inside grip always free. Note: Indicator shows deadbolt position only.
		ML2050	Half Dummy Trim	• Grip acts as pull only; no operation.
A01		ML2051 (F04)	Entrance or Office	• Latchbolt by key when outside grip locked by toggle action stop. • Latchbolt by grip either side, unless outside grip is locked by toggle-action stop. • Auxiliary latch deadlocks latchbolt. • Inside grip always free.
A02	A02	ML2052 (F32)	Classroom Intruder	• Latchbolt by grip either side, unless outside grip is locked by key either side. • Latchbolt by key when outside grip locked. • Auxiliary latch deadlocks latchbolt. • Inside grip always free. • Outside grip remains locked unless unlocked by key either side. Note: Not available with indicator, specify ML2002.
A02		ML2053	Entrance or Office	• Latchbolt by grip either side, unless outside grip is locked or unlocked by key or thumbturn. • Outside grip locked or unlocked by key or thumbturn. • Latchbolt by key when outside grip locked. • Auxiliary latch deadlocks latchbolt. • Inside grip always free.
A01		ML2054 (F04)	Entrance or Office	• Latchbolt by grip either side, unless outside grip is locked. • Outside grip locked or unlocked by thumbturn. • Latchbolt by key when outside grip locked. • Auxiliary latch deadlocks latchbolt. • Inside grip always free. • Multi-function capable, see page 10 for more info.
A02		ML2055 (F05)	Classroom	• Latchbolt by grip either side, unless outside grip is locked by key outside • Latchbolt by key when outside grip locked. • Auxiliary latch deadlocks latchbolt. • Inside grip always free. • Outside grip remains locked unless unlocked by key. Note: Not available with indicator, specify ML2003.

Indicator options available for both sectional and escutcheon trim.
Cylinder cam required.
Indicates rigid grip.
* When lever handles are furnished, both outside and inside are locked when deadbolt is projected.

Experience a safer and more open world

ML2000.6

Copyright © 2001-2022, ASSA ABLOY Access and Egress Hardware Group, Inc. All rights reserved. Reproduction in whole or in part without the express written permission of ASSA ABLOY Access and Egress Hardware Group, Inc. is prohibited. Patent pending and/or patent www.assaabloyeis.com/patents.

45300 10/22

finish options

Color	Bright brass	Satin brass	Antique bronze	Satin bronze	Oil rubbed bronze	Satin nickel	Matte black	Bright chrome	Satin chrome	Bright stainless steel	Satin stainless steel	Aged bronze
ANSI/BHMA	605	606	609	612	613	619	622	625	626/ 626AM	629	630/ 630AM	643e
US	US3	US4	US5	US10	US10B	US15	US19	US26	US26D	US32	US32D	US11
Mechanical	■	■	■	◆	◆	■	■	■	■	■	■	■
Wired electrified	■	■	■	◆	◆	■	■	■	■	■	■	■
Wireless electronic	■	■		◆		■	■	■	■			■
Multi-point	■	■	■	◆	◆	■	■	■	■	■	■	■

MERIDIEN GROUP

MERIDIEN GROUP, LLC
208 SOUTH KING ST. SUITE 303
LEESBURG, VA 20175
(703) 777-8285
www.meridiengroupllc.com

CITADEL
ARCHITECTURE | HISTORIC PRESERVATION | PLANNING | DESIGN

CERTIFICATIONS

KEY PLAN

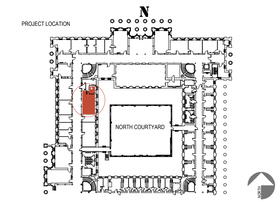

REVISION NOTES

MARK	DATE	DESCRIPTION

GRAPHIC SCALE

CAUTION: IF THIS DRAWING IS A REDUCTION THIS GRAPHIC SCALE MUST BE USED

CAUTION: IF THIS DRAWING IS A REDUCTION THIS GRAPHIC SCALE MUST BE USED

CONTRACTORS	
A/E CON. NO.	
A/E TASK NO.	
CONS. CONTR	
CONS. WORK	
PRIME A/E	MERIDIEN GROUP / CITADEL DCA
SUB A/E	
BUILDING	
NAME	
STREET	
CITY/ST./ZIP	WASHINGTON, DC
BUILDING NO.	DC-
OTHER BUILDING NOs.	
FACILITY CODE	
PROJECT	
PROJECT TITLE	FEDERAL OFFICE BUILDING MT 2453 OFFICE RENOVATION
PROJECT DESCRIPTION	RENOVATION OF SECOND FLOOR SUITE
PROJECT NO.	MT2453_26_004
GSA PM	BARBARA CHOATE
SUBMISSION	100% SUBMISSION FOR REVIEW
SUB. DATE	28 APRIL 2026
DRAWING	
DRAWING TITLE	BOD DOOR & HARDWARE
FILE NAME	
FLOOR NO.	2ND FLOOR
DRAWN BY	AGF DATE DRAFTED: 04/14/2026
CHECKED BY	LSP SHEET SIZE: 24 x 36
DRAWING NO.	A-701
DISCIPLINE	SHEET TYPE SEQUENCE
SHEET	21 OF 21