FEDERAL OFFICE BUILDING

1ST FLOOR NORTH COURTYARD OFFICES ALTERATIONS

SUITE 1125

100% SUBMISSION
REV-3

06-15-2026

KEY PLAN

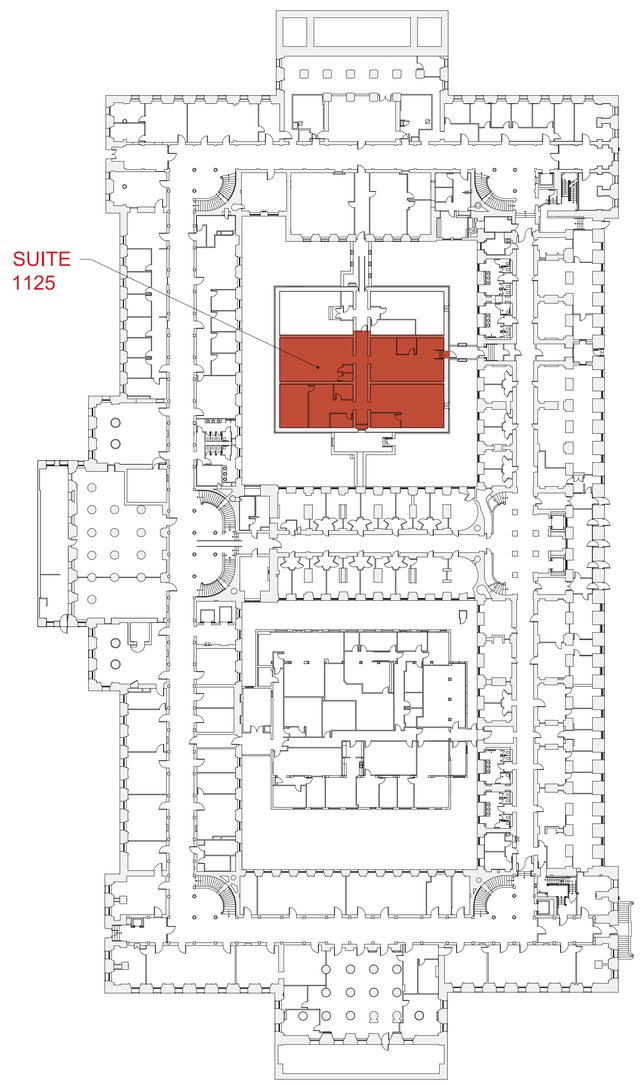

1ST FLOOR

NORTH

PROJECT INFORMATION

PROJECT ADDRESS:

OCCUPANCY CLASSIFICATION: B,

BUILDING SPRINKLERS: AUTOMATIC SPRINKLER SYSTEM

HISTORIC OVERVIEW: THE BUILDING IS IN THE NATIONAL REGISTER OF HISTORIC PLACES

WORK DESCRIPTION

NEW FINISHES + NEW ENTRY END EXIT STC-50 / RF SHIELDING READY ENTRY DOOR

ALL WORK NECESSARY AS FOLLOWS:

A. REMOVAL OF DESIGNATED DOOR AND PREPARATION OF OPENING TO RECEIVE NEW DOOR. THE OPENING WILL BE WIDEN TO ALLOW FOR FUTURE REMOVAL AND INSTALLATION OF MECHANICAL EQUIPMENT

B. INSTALLATION OF NEW STC-50 DOOR SOUND GROUP 4 AND HARDWARE AS INDICATED IN THE CONSTRUCTION DOCUMENTS

C. PREPARATION AND PAINTING OF ALL THE WALLS AND ALL OTHER COMPONENTS CURRENTLY PAINTED

D. REMOVAL OF OLD CARPET AND INSTALLATION OF NEW CARPET (BUILDING STANDARD)

E. REMOVAL OF OLD CEILING TILE AND GRID AND INSTALLATION OF NEW ACT AND GRID (BUILDING STANDARD)

REVIEW COMMENTS / NOTES

DRAWING INDEX

GENERAL

G-001	COVER SHEET	01 OF 28
G-002	NOTES, ABBREVIATIONS, AND SYMBOLS	02 OF 28
G-003	PHYSICAL AND TECHNICAL SECURITY STANDARDS	03 OF 28
G-004	MOLD REMEDIATION AND ENVIRONMENTAL RESTORATION SOW	04 OF 28
G-005	MOLD REMEDIATION AND ENVIRONMENTAL RESTORATION SOW	05 OF 28

ARCHITECTURAL

AD 101	EXISTING, DEMOLITION, AND PROTECTION	06 OF 28
A-101	NEW WORK FLOOR PLAN, NEW FURNITURE,	07 OF 28
A-301	DOOR OPENING 1507 SECTION AND DETAILS	08 OF 28
A-302	FRAMING UNDER FLOOR PANELS FOR NEW CONFERENCE ROOM 1505 D WALLS	09 OF 28
A-501	FRAMING DETAILS	10 OF 28
A-502	FLOOR PANEL ADJUSTMENT DETAILS	11 OF 28
A-503	FLOOR PANEL ADJUSTMENT DETAILS	12 OF 28
A-504	STC-50 - RF DOOR DETAILS (DOOR FRAME F-1 & LEAF TYPE A) INSTALLATION @ DOOR 1507	13 OF 28
A-504	STC-50 - DOOR 1505D DETAILS (DOOR FRAME F-1 & LEAF TYPE A)	14 OF 28
A-601	FINISHES NOTES AND FINISHES SCHEDULE	15 OF 28
A-602	ROOM FINISHES SCHEDULE, DOOR SCHEDULE & HARDWARE SCHEDULE	16 OF 28
A-603	DOOR ELEVATIONS & CHARACTERISTICS SUMMARY	17 OF 28
A-701	BASIS OF DESIGN CUT SHEETS DOOR AND SECURITY COMPONENTS	18 OF 28
A-702	BASIS OF DESIGN HARDWARE	19 OF 28
A-703	BASIS OF DESIGN HARDWARE	20 OF 28
A-704	BASIS OF DESIGN FRAMING COMPONENTS	21 OF 28

MECHANICAL

M-001	MECHANICAL SYMBOLS AND NOTES	22 OF 28
M-101	MECHANICAL DEMOLITION	23 OF 28
M-102	MECHANICAL NEW WORK	24 OF 28
M-201	MECHANICAL SCHEDULES, DETAILS, AND SPECIFICATIONS	25 OF 28

ELECTRICAL

E-001	ELECTRICAL SYMBOLS AND NOTES	26 OF 28
E-101	ELECTRICAL DEMOLITION	27 OF 28
E-102	ELECTRICAL NEW WORK	28 OF 28

MERIDIEN GROUP

MERIDIEN GROUP, LLC
208 SOUTH KING ST. SUITE 303
LEESBURG, VA 20175
(703) 777-8285
www.meridiengroupllc.com

CITADEL
ARCHITECTURE | HISTORIC PRESERVATION | PLANNING | DESIGN

CERTIFICATIONS

KEY PLAN

REVISION NOTES

MARK	DATE	DESCRIPTION

GRAPHIC SCALE

CAUTION: IF THIS DRAWING IS A REDUCTION THIS GRAPHIC SCALE MUST BE USED

CONTRACTORS	
A/E CON. NO.	
A/E TASK NO.	
CONS. CONTR	
CONS. WORK	
PRIME A/E	MERIDIEN GROUP / CITADEL DCA
SUB A/E	

BUILDING	
NAME	
STREET	
CITY/ST./ZIP	WASHINGTON, DC
BUILDING NO.	DC-
OTHER BUILDING NOs.	
FACILITY CODE	

PROJECT	
PROJECT TITLE	FEDERAL OFFICE BUILDING MT 1125 OFFICE RENOVATION
PROJECT DESCRIPTION	RENOVATION OF FIRST FLOOR SUITE AND UPGRADE SECURITY
PROJECT NO.	MT1125_26_005
GSA PM	BARBARA CHOATE
SUBMISSION	100% SUBMISSION REV-3
SUB. DATE	15 JUNE 2026

DRAWING	
DRAWING TITLE	COVER SHEET
FILE NAME	
FLOOR NO.	1ST FLOOR
DRAWN BY	AGF DATE DRAFTED: 04/24/2026
CHECKED BY	LSP SHEET SIZE: 24 x 36
DRAWING NO.	G- 001
	DISCIPLINE SHEET TYPE SEQUENCE
	SHEET 1 OF 28

GENERAL CONSTRUCTION / WORK NOTES

1. OMISSIONS FROM THE DRAWINGS OR SPECIFICATIONS OF THE DESCRIPTION OF DETAILS OF WORK WHICH ARE MANIFESTLY NECESSARY TO CARRY OUT THE INTENT OF THE DRAWINGS AND SPECIFICATIONS OR ARE CUSTOMARILY PERFORMED SHALL NOT RELIEVE THE CONTRACTOR FROM PERFORMING SUCH OMITTED OR MIS-DESCRIBED DETAILS OF WORK BUT SHALL BE PERFORMED AS IF FULLY AND CORRECTLY SET FROM AND DESCRIBED IN THE DRAWINGS AND S SPECIFICATION

2. MANUFACTURER SPECIFIED WITHIN THE CONSTRUCTION DOCUMENTS ARE PROVIDED AS A MINIMUM PERFORMANCE CRITERIA, SUBSTITUTIONS WILL BE CONSIDERED IF COMPLAINT TO THE PERFORMANCE ESTABLISHED BY THE MANUFACTURER NOTED. BUILDING MATERIALS SUBSTANDARD TO THESE REQUIREMENTS WILL BE SUMMARILY REJECTED. ALL BUILDING COMPONENTS ARE TO BE HEAVY DUTY QUALITY AND BE FOR ABUSIVE RESISTANCE INSTALLATION. BUILDING COMPONENTS SPECIFIED HEREIN THAT DO NOT MEET THE HEAVY DUTY-ABUSIVE ENVIRONMENTAL CRITERIA MUST BE BROUGHT TO THE ATTENTION OF THE BUILDING REPRESENTATIVE AND WILL BE RE-SPECIFIED

3. BY THE SUBMISSION OF A BID, THE SUB CONTRACTOR REPRESENTS THAT HE HAS VISITED THE SITE AND HAS FAMILIARIZED HIMSELF/HERSELF WITH THE CONDITIONS UNDER WHICH THE WORK IS TO BE PERFORMED

4. DRAWINGS ARE NOT TO BE SCALED FOR DIMENSIONS AND/OR SIZE. VERIFY ALL DIMENSIONS BEFORE PROCEEDING AND OBTAIN MEASUREMENTS AT THE JOB FOR ALL WORK REQUIRED TO BE ACCURATELY FITTED TO THE BUILDING. THE CONTRACTOR SHALL BE RESPONSIBLE FOR THE ACCURACY OF ALL SUCH MEASUREMENTS AND FOR THE PRECISE FITTING OF THE WORK

5. IF CONFLICTS ARE DISCOVERED AT ANY TIME BETWEEN THE ENGINEERING AND ARCHITECTURAL DRAWINGS, THE COR SHALL BE CONTACTED AT ONCE TO RESOLVE THE PROBLEM. IF THE COR IS NOT CONTACTED, THE CONTRACTOR SHALL ACCEPT THE RESPONSIBILITY TO CORRECT ANY AND ALL SUCH WORK NOT IN A COORDINATE WITH THE ARCHITECTURAL DRAWINGS

6. CHANGES TO THE DRAWINGS (ADDITIONS, DELETIONS OR ALTERATIONS) THAT MIGHT CONSTITUTE A CHANGE ORDER MUST BE SUBMITTED IN WRITING TO THE COR FOR APPROVAL, OTHERWISE CONTRACTOR WOULD UNDERTAKE SUCH WORK AT HIS OWN RISK AND WORK MIGHT HAVE TO BE REVERSED AT CONTRACTOR'S OWN COST

7. BEST PRACTICES, METHODS AND MATERIALS, MUST BE FOLLOWED AT ALL TIMES. ANY ITEM NOT SPECIFICALLY LISTED OR SHOWN ON THE CONTRACT DOCUMENTS BUT NECESSARY FOR THE COMPLETION OF THE PROJECT, SHALL BE CONSIDERED PART OF THE CONTRACT'S SCOPE OF WORK

8. THE G. C. & ALL SUB-CONTRACTOR SHALL SUBMIT TO COR SUBMITTALS AND SHOP DRAWINGS FOR REVIEW PRIOR TO START OF CONSTRUCTION.

9. UPON COMPLETION OF THE INSTALLATION, REMOVE ALL DEBRIS FROM THE BUILDING CREATED BY THE WORK PROVIDED UNDER THIS CONTRACT AND LEAVE ALL AREAS CLEAN. REMOVE ANY SOILED SPOTS FROM THE FACE OF THE CARPET OR OTHER FINISH SURFACES USING PROCESSES RECOMMENDED BY THE MANUFACTURER AND IN A MANNER ACCEPTABLE TO THE GOVERNMENT. REPLACE ANY AREAS OF CARPET OR FINISH SURFACES WHERE CLEANING HAS FAIL TO RESTORE THE APPEARANCE AND QUALITY SATISFACTORILY, AS DETERMINED BY THE GOVERNMENT.

10. WHERE THE G. C. IS INSTRUCTED TO ALIGN A PARTITION WITH TWO OR MORE COLUMNS AND THE COLUMNS ARE DISCOVE- RED TO BE OF UNEQUAL SIZE, THE LARGER OF THE COLUMNS SHALL DETERMINE THE LOCATION OF THE PARTITION. THIS WILL ALSO APPLY TO COLUMNS AND CORE WALLS.

11. AREA OF WORK MUST BE ISOLATED FROM THE REST OF THE FLOOR. PROTECT ALL SURFACES, EQUIPMENT& FURNITURE PRIOR TO START OF WORK

12. PROTECT ALL GOVERNMENT PROPERTY ENCOUNTERED AT THE JOB SITE AGAINST DAMAGE. ALL DAMAGE CAUSED BY THE GC OR HIS SUB-CONTRACTORS DURING CONSTRUCTION SHALL BE REPAIRED OR REPLACED TO MATCH EXISTING AND TO THE SATISFACTION AND APPROVAL OF THE COR. PRE-EXISTING DAMAGE MUST BE REVIEWED AND ACKNOWLEDGED, IN WRITING BY THE GOVERNMENT AND ARCHITECT PRIOR TO COMMENCEMENT OF WORK. DAMAGE NOT DOCUMENTED PRIOR TO CONSTRUCTION START SHALL BE REPAIRED TO LIKE NEW CONDITION WITHOUT ADDITIONAL CHARGE TO THE GOVERNMENT.

13. WHEN IN PLACE, REMOVE ALL HVAC COVERS AS NEEDED. SEAL EXPOSED DUCTS AND VENTS TO PREVENT INTRODUCING DUST INTO THE SYSTEM. (REMOVED COVERS MUST BE REINSTALLED AT END OF THE JOB)

14. THE CONTRACTOR SHALL CLEAN UP ALL ACTIVE WORK AREAS AFTER EACH DAY'S WORK. THE CONTRACTOR IS RESPONSIBLE FOR THE REMOVAL AND PROPER DISPOSAL OF ALL WORK RELATED TRASH AND DEBRIS.

15. THE G. C. SHALL ENSURE THAT ALL PAINT HAS BEEN REMOVED FROM ALL NON-SCHEDULE PAINTED SURFACES PRIOR TO DELIVERY OF THE SPACE.

16. THE G. C. SHALL COORDINATE ALL WORK WITH FIELD CONDITIONS AND ALL OTHER TRADES INVOLVED AS REQUIRED

17. IF THERE IS A QUESTION AS TO THE ACCEPTABLE LEVEL OF QUALITY FOR THE INSTALLATION OF ANY MATERIALS, THE COR DECISION WILL BE FINAL

18. NEW DOOR HARDWARE, INCLUDING HINGES AND LOCK SETS, ARE TO BE MOUNTED AT ABA HEIGHTS U. N. O.

19. ALL CEILING REGISTERS, GRILLES, VENTS AND DIFFUSERS SHALL BE FACTORY FINISHED. IF PAINTING IS REQUIRED, PROVIDE ENAMEL FINISH

20. ALL J-BENDS AND OTHER GYPSUM METAL TRIM SHALL BE SPACKLE-BLENDED INTO THE ADJACENT SURFACE.

21. WHERE TWO OR MORE WALL SWITCHES OR DIMMERS OCCUR IN THE SAME LOCATION, THEY ARE TO RECEIVE A COMMON GANG PLATE WHOSE FINISH IS TO MATCH THE BUILDING STANDARD SWITCH PLATE.

22. ALL PAINTED WALLS SHALL BE HAVE A LEVEL 4 FINISH: WITH ONE ROLLER-APPLIED (1) PRIMER COAT AND (2) ROLLER- APPLIED FINISH COATS.

23. PROVIDE THRESHOLDS AT ALL DOORS & TRANSITION STRIPS WHERE CARPET MEETS A DIFFERENT TYPE OF FLOORING UNLESS NOTED OTHERWISE

24. REVIEW THE SCHEDULES, SPECIFICATIONS AND CUT SHEETS FOR ACCESSORIES, FIXTURES, ETC. THAT ACCOMPANY THE DRAWING SET PRIOR TO PLACING ORDERS. IF CONFLICTS ARE FOUND, INFORM THE COR OF SUCH FINDINGS AND TAKE NO ACTION UNTIL RESOLVED. IN THOSE CASES, IF AN ORDER FOR AN UNRESOLVED ITEM IS PLACED WITHOUT APPROVAL OF COR, THE CONTRACTOR ASSUMES ALL RESPONSIBILITY IF THE ITEM IS NOT ACCEPTED BY THE GOVERNMENT

25. ALL WORK MUST BE COMPLETED CONFORMING TO CODES AND REGULATIONS WHICH INCLUDE, BUT ARE NOT LIMITED TO THE FOLLOWING (LATEST EDITIONS AS PER 9/2025) : International Building Code (IBC), International Existing Building Code (IEBC), DT-DRM REV. 2.1, Architectural Barriers Act (ABA) Accessibility Standards, NFPA 1: Fire Code, NFPA 10: Standard for Portable Fire Extinguishers, NFPA 13: Standard for the Installation of Sprinkler Systems,NFPA 70 (NEC): National Electrical Code, NFPA 72: National Fire Alarm and Signaling Code, NFPA 80: Standard for Fire Doors and Other Opening Protectives, NFPA 90A: Standard for the Installation of Air-Conditioning and Ventilating SystemsNFPA 101: Life Safety Code, NFPA 241: Standard for Safeguarding Construction, Alteration, and Demolition Operations. WHERE A CONFLICT OCCURS IN OR BETWEEN THE AFOREMENTIONED CODES AND REGULATIONS, THE STRICTER SHALL APPLY UNLESS OTHERWISE INDICATED OR AGREED UPON.

26. THE INVESTIGATION FOR AND REMEDIATION OF ANY HAZARDOUS MATERIALS WITHIN THE PROJECT AREA ARE NOT A PART OF THESE CONSTRUCTION DOCUMENTS. ANY SUCH MATERIAL THAT IS ENCOUNTERED AND IMPACTS THE PROGRESS OF THE WORK INDICATED BY THESE DRAWINGS AND SPECIFICATIONS MUST BE DEALT WITH BY THE CONTRACTOR WITH THE OWNER UNDER SEPARATE CONTRACT. THIS REQUIREMENT SHALL IN NO WAY BE CONSTRUED AS REPRESENTATION BY THE ARCHITECT AS TO HOW TO IDENTIFY AND REMEDIATE SAID MATERIAL.

27. CONTACT DFM TO PERFORM INSPECTIONS PRIOR TO WALL AND CEILING CLOSE-INS, AS WELL AS FINAL OCCUPANCY INSPECTION.

28. PROVIDE DEMOLITION TO THE MINIMUM EXTENT REQUIRED FOR THE INSTALLATION OF FIRE ALARM, SECURITY SYSTEMS AND TELECOMMUNICATIONS WORK. COORDINATE WITH EACH TRADES AND CONSULTANTS AND VERIFY THE EXTENT OF THE WORK REQUIRED. EXISTING FINISHES AND EQUIPMENT IN THE WORK AREAS ARE TO REMAIN AND SHOULD BE DISTURBED ONLY TO THE MINIMUM EXTENT TO PERFORM THE WORK.

29. COORDINATE ALL WORK REQUIRED ON FLOORS AND IN THE CEILINGS ABOVE AND BELOW THE PROJECT AREA W/ THE COR AND W/ THE USERS IN THE AFFECTED AREAS. REMOVE EXISTING CONSTRUCTION TO THE MINIMUM EXTENT REQUIRED FOR THE PERFORMANCE OF THE WORK AND REPLACE WITH LIKE-KIND AT THE CONCLUSION OF THE WORK. VERIFY THE TYPES AND AMOUNT OF EXISTING CONSTRUCTION TO BE AFFECTED. PROTECT ALL USER FURNITURE, FIXTURES AND EQUIPMENT WHILE PERFORMING THE WORK AND REPLACE ANY DAMAGED ARTICLES IN-KIND. CLEAN ALL AFFECTED USER AREAS AFTER THE COMPLETION OF THE WORK AND RETURN ALL FF&E ITEMS TO THEIR ORIGINAL LOCATIONS.

30. POWDER-ACTIVATED TOOLS REQUIRE WRITTEN APPROVAL BY THE PROJECT OFFICER AND PRESENTED UPON REQUEST WHEN IN USE. USE OF THESE TOOLS ALSO REQUIRES PROOF OF LICENSING AND TRAINING WHICH MUST ALSO BE PROVIDED UPON REQUEST. CONTRACTOR SHALL PROVIDE A LOG OF "WHO, WHAT, WHERE AND WHEN" FOR ANY POWER OR POWDER ACTIVATED TOOLS THAT WILL BE USED. EXAMPLES OF SUCH TOOLS INCLUDE: AIR OR ELECTRICALLY POWERED TOOLS SUCH AS NAIL-GUNS, RAM TOOLS, OR ANY OTHER TOOL THAT CAN PROPEL A PROJECTILE AND MIGHT BE WEAPONIZED. THE LOG SHALL BE CONTINUALLY UPDATED DURING CONSTRUCTION, MADE AVAILABLE UPON REQUEST, AND PROVIDED TO THE PROJECT OFFICER AT WORK COMPLETION. (NOTE: GAS TOOLS ARE NOT ALLOWED AT TREASURY)

31. ALL MATERIALS MUST BE U.S.A. MADE

32. EMPTY DUCTS, CONDUITS, PIPES ,OR SLEEVES MUST BE FILLED WITH FIRE STOP FOAM, OR SEALANT, THEN CLOSED OFF.

HISTORIC PRESERVATION

1. ANY PROJECT AFFECTING HISTORIC PROPERTIES MUST FOLLOW SECRETARY OF THE INTERIOR'S STANDARDS FOR THE TREATMENT OF HISTORIC PROPERTIES
2. ALL DESIGNS MUST FOLLOW APPLICABLE NIH TECHNICAL GUIDELINES AND REQUIREMENTS FOR HISTORICAL BUILDINGS
3. PROTECT ALL HISTORIC FABRIC DURING DEMOLITION AND CONSTRUCTION. DO NOT REMOVE HISTORIC FABRIC UNLESS NOTED ON DOCUMENTS. ANY HISTORIC FABRIC REMOVED MUST BE RETURNED TO COR. DO NOT DISPOSE.

ABBREVIATIONS

A	ABA	ARCHITECT. BARRIERS ACT
	AC	ACOUSTICAL TILE
	ACT	ACOUSTIC CEILING TILE
	AD	AREA DRAIN
	ADA	AMER. W/ DISABILITIES ACT
	ADJ	ADJUSTABLE
	AFF	ABOVE FINISH FLOOR
	ALT	ALTERNATE
	ALUM	ALUMINUM
	A&G	ALUMINUM AND GLASS
	ANCH	ANCHOR
	APPROX	APPROXIMATE
	AOR	ARCHITECT OF RECORD
	ARCH	ARCHITECTURAL
	ATT	ATTENUATION
	AU	ASH URN
	A/V	AUDIO VISUAL
B	B & B	BALLED AND BAGGED
	BD	BOARD
	BET	BETWEEN
	BF	BARRIER FREE
	BIT	BITUMINOUS
	BLDG	BUILDING
	BLKG	BLOCKING
	BM	BEAM
	BMK	BENCHMARK
	BNG	BEARING
	BOD	BOTTOM OF DECK
	BTM	BOTTOM
	BR	BACKER ROD
	BRG	BRIDGING
	BUR	BUILT UP ROOFING
	BW	BOTH WAYS
C	C	COURSE
	CAB	CABINET
	CEM	CEMENT OR CEMENTITIOUS
	CER	CERAMIC
	CG	CORNER GUARD
	CIP	CAST IN PLACE
	CJ	CONTROL JOINT
	CL	CENTER LINE
	CLG	CEILING
	CLM	COLUMN
	cm	CENTIMETER
	CMU	CNCRETE MASONRY UNIT
	COMP	COMPRESSION
	CONC	CONCRETE
	CONT	CONTINUOUS
	CORR	CORRIDOR
	CPT	CARPET
	CSK	COUNTERSINK
	CT	CERAMIC TILE
	CTTA	CERTIFIED TEMPEST TECHNICAL AUTHORITY
D	D	DEPTH OR DEEP
	DBL	DOUBLE
	DBC	DESIGN BUILD CONTRACTOR
	DEG	DEGREE
	DEMO	DEMOLITION
	DET	DETAIL
	DF	DRINKING FOUNTAIN
	DIA	DIAMETER
	DIM	DIMENSION
	DN	DOWN
	DP	DAMP PROOFING
	DR	DOOR
	DS	DOWN SPOUT
	DW	DISH WASHER
	DWG	DRAWING
	DWR	DRAWER
E	E	EAST
	EA	EACH
	EHB	ELECTRIC HAND BLOWER
	EHD	ELECTRIC HAND DRYER
	EIFS	EXISTING INSULATING FINISH
	EJ	EXPANSION JOINT
	EL	ELEVATION (GRADE)
	ELEC	ELECTRICAL
	EQ	EQUAL
	EQUIP	EQUIPMENT
	ETS	EXPOSED TO STRUCTURE
	EW	EACH WAY
	EWC	ELECTRIC WATER COOLER
	EXT	EXTERIOR
	EXTG	EXISTING
	EXTD	EXTRUDED
F	FCU	FAN COIL UNIT
	FD	FLOOR DRAIN
	FE	FIRE EXTINGUISHER
	FEC	FIRE EXTINGUISHER CABINET
	FEX	FIRE EXTINGUISHER (NO CAB)
	FFA	FURNITURE, FIXTURES & ACCESSORIES
	FFE	FURNITURE, FIXTURES & EQUIPMENT
	FF	FINISHED FLOOR
	FHC	FIRE HOSE CABINET
	F&I	FURNISH AND INSTALL
	FIN	FINISH
	FLASH	FLASHING
	FLR	FLOOR
	FLUOR	FLUORESCENT
	FOF	FACE OF FINISH
	FP	FIREPROOFING
	FPHB	FREEZE-PROOF HOSE BIB
	FR	FIRE RETARDANT/ RESISTANT
	FRP	FIBERGLASS REINFORCED POLYMER
	FT	FOOT/FEET
	FTG	FOOTING
	FURN	FURNITURE
	FURR	FURRING
	FV	FIELD VERIFY
	FWC	FABRIC WALL COVERING
G	GA	GAUGE
	GALV	GALVANIZED
	GB	GRAB BAR
	GC	GENERAL CONTRACTOR
	GFI	GROUND FAULT INTERRUPT
	GFRC	GOVERNMENT FURNISHED/ CONTRACTOR INSTALLED
	GFRG	GLASS FIBER REINFORCED CONCRETE
	GL	GLASS
	GND	GROUND
	GR	GRADE
	GWB	GYPSUM WALL BOARD
	GYP	GYPSUM
	GYP BD	GYPSUM BOARD
H	H	HIGH
	HB	HOSE BIB
	HBD	HARDBOARD
	HC	HOLLOW CORE
	HCTLT	HANDICAPPED ACCESSIBLE TOILET
	HD	HOLD
	HDR	HEADER
	HDW	HARDWARE
	HDWD	HARDWOOD
I	IBC	INTERNATIONAL BUILDING CODE
	IEBC	INTERNATIONAL EXISTING BUILDING CODE
	IECC	INTERNTL. ENERGY CONSERVATION CODE
	IFC	INTERNATIONAL FIRE CODE
	ID	INSIDE DIAMETER
	IMC	INTERNATIONAL MECHANICAL CODE
	IN	INCH
	INCAN	INCANDESCENT
	INCL	INCLUDING
	INSUL	INSULATION
	INT	INTERIOR
	IPC	INTERNATIONAL PLUMBING CODE
J	JB	JUNCTION BOX
	JT	JOINT
K	KD	KNOCK DOWN
	KO	KNOCK OUT
L	L	LONG
	LAM	LAMINATED
	LAV	LAVATORY
	LB	LAG BOLT OR LINEAR BOLT
	LBP	LEAD-BASED PAINT
	LF	LINEAR FEET
	LLH	LONG LEG HORIZONTAL
	LLV	LONG LEG VERTICAL
	LP	LOW POINT
	LT	LIGHT OR LIGHTING
	LW	LIGHT WEIGHT
M	M	METER
	MACH	MACHINE
	MAS	MASONRY
	MAT	MATERIAL
	MAX	MAXIMUM
	MBH	MOP & BROOM HOLDER
	MBR	MODIFIED BITUMINOUS ROOF
	MC	MEDICINE CABINET
	MECH	MECHANICAL
	MEMB	MEMBRANE
	MEP	MECHANICAL, ELECTRICAL & PLUMBING
	MFR	MANUFACTURER
	MH	MANHOLE
	MIN	MINIMUM
	MIR-F	MIRROR-FRAMED EDGE
	MIR-G	MIRROR-GLASS EDGE
	MISC	MISCELLANEOUS
	MLD	MOULDING
	MM	MILIMITER
	MNTD	MOUNTED
	MO	MASONRY OPENING
	MS	MOP SINK
	MSD	MATERIAL SAFETY DATA
	MTD	MOUNTED
	MTG	MOUNTING
	MTL	METAL
N	N	NORTH
	N/A	NOT APPLICABLE
	NCOM	NON-COMBUSTIBLE
	NEC	NATIONAL ELECTRICAL CODE
	NIC	NOT IN CONTRACT
	NFPA	NATIONAL FIRE PROTECTION ASSOCIATION
	NOM	NOMINAL
	NPS	NOMINAL PIPE SIZE
	NTS	NOT TO SCALE
O	OC	ON CENTER
	OD	OUTSIDE DIAMETER
	OFCI	OWNER FURNISHED/ CONTRACTOR INSTALLED
	OFD	OVERFLOW DRAIN
	OFOI	OWNER FURNISHED/ OWNER INSTALLED
	OH	OPPOSITE HAND OR OVERHEAD
	OPG	OPENING
	OPP	OPPOSITE
	OPT	OPTION OR OPTIONAL
	OSSI	OFFICE OF SECURITY & STRATEGIC INFORMATION
	OZ	OUNCES
P	PA	PUBLIC ADDRESS SYSTEM
	PAF	PRESSURE AIR FASTENER
	PC	PRECAST
	PCEM	PORTLAND CEMENT
	PCF	POUNDS PER CUBIC FOOT
	PL	PLATE
	PLAM	PLASTIC LAMINATE
	PLBG	PLUMBING
	PLF	POUNDS PER LINEAR FOOT
	PLTR	PLASTER
	PLY	PLYWOOD
	PMR	PROTECTED MEMBRANE ROOFING
	PNL	PANEL
	PNT	PAINT OR PAINTED
	POE	POINT OF ENTRY
	POL	POLISHED
	PR	PAIR
	PSF	POUNDS PER SQUARE FOOT
	PSI	POUNDS PER SQUARE INCH
	PT	POINT
	PTD	PAPER TOWEL DISPENSER
	PTN	PARTITION
	PVC	POLYVINYL CHLORIDE
	PVMT	PAVEMENT
Q	QT	QUARRY TILE
	QTR	QUARTER
	QTY	QUANTITY
R	R	RADIUS OR RISER
	RA	RETURN AIR
	RCP	REFLECTED CEILING PLAN
	RD	ROOF DRAIN
	RE	REFER
	RECEP	RECEPTACLE
	REFL	REFLECTED
	REG	REGISTER
	REINF	REINFORCEMENT
	REQD	REQUIRED
	RES	RESILIENT
	REV	REVERSE
	RFI	REQUEST FOR INFORMATION
	RH	ROBE HOOK
	RM	ROOM
	RO	ROUGH OPENING
	ROW	RIGHT OF WAY
	RSF	RESILIENT SHEET FLOORING
S	S	SOUTH
	SA	SUPPLY AIR
	SAN	SANITARY
	SB	SPLASH BLOCK
	SC	SOLID CORE
	SCC	SECURITY COMMAND CENTER
	SCHED	SCHEDULE
	SCIF	SENSITIVE COMPARTMENTED INFORMATION FACILITY
	SCWD	SOLID CORE WOOD DOOR
	SD	SOAP DISPENSER
	SECT	SECTION
	SF	SQUARE FEET
	SFP	SPRAYED FIREPROOFING
	SH	SPRINKLER HEAD
	SHT	SHEET
	SHTG	SHEATHING
	SIM	SIMILAR
	SKLT	SKYLIGHT
	SP	STANDPIPE
	SPEC	SPECIFIED OR SPECIFICATION
	SQ	SQUARE
	SR	SHOWER ROD
	SR/SC	SHOWER ROD / SHOWER CURTAIN
	SS	STAINLESS STEEL
	ST	SOAP TRAY
	STC	SOUND TRANSMISSION CLASS
	STD	STANDARD
	STL	STEEL
	STOR	STORAGE
	STRL	STRUCTURAL
	STRU	STRUCTURE
	SUSP	SUSPENDED
	SYM	SYMBOL
	SYN	SYNTHETIC
	SYS	SYSTEM
T	T	TREAD OR TOP
	TB	TOWEL BAR
	TBL	TOP OF BRICK LEDGE
	T&B	TOP & BOTTOM
	TC	TOP OF CURB
	TD	TRENCH DRAIN
	TEL	TELEPHONE
	TERR	TERRAZZO
	T&G	TONGUE AND GROOVE
	THK	THICK
	THRU	THROUGH
	TLT	TOILET
	TOC	TOP OF CONCRETE
	TOD	TOP OF DECK
	TOF	TOP OF FOOTING
	TOI	TOP OF INSULATION
	TOJ	TOP OF JOIST
	TOP	TOP OF PARAPET
	TOS	TOP OF STEEL
	TOW	TOP OF WALL
	TPH	TOILET PAPER HOLDER
	TR	TELEPHONE RECEPTACLE
	TTB	TELEPHONE TERMINAL BOARD
	TV	TELEVISION
	TYP	TYPICAL
U	UCL	UNDER CABINET LIGHT
	ULAY	UNDERLAYMENT
	UNFIN	UNFINISHED
	UNO	UNLESS NOTED OTHERWISE
	UON	UNLESS OTHERWISE NOTED
	UR	URINAL
V	VB	VAPOR BARRIER
	VCT	VINYL COMPOSITION TILE
	VERT	VERTICAL
	VIF	VERIFY IN FIELD
	VP	VENT PIPE
	VS	VENT SHAFT
	VT	VINYL TILE
	VWC	VINYL WALL COVERING
W	W	WEST OR WIDE OR WIDTH
	W/	WITH
	WB	WIND BRACE
	WC	WATER COSET
	WCOT	WAINSCOT
	WD	WOOD
	WDO	WINDOW
	WH	WEEP HOLE
	W/O	WITHOUT
	WO	WINDOW OPENING
	WP	WATER PROOFING
	WR	WASTE RECEPTACLE
	W/R	WATER RESISTANT
	WS	WEATHERSRIPPING
	WT	WEIGHT
	WWF	WELDED WIRE FABRIC
Y	YD	YARD
	&	AND
	@	AT
	=	EQUAL
	±	PLUS / MINUS
	#	POUNDS OR NUMBER
	x	TIMES
	°	DEGREES
	∠	ANGLE
	Ø	DIAMETER
	℄	CENTER LINE
	'	FEET
	"	INCHES

SYMBOLS LEGEND

ALIGN — ALIGN SURFACES	EXISTING WALL TO REMAIN
XX — GENERAL / KEYED NOTE	NEW STC-50 WALL
X — DEMOLITION NOTE	NEW WALL AS PER WALL TYPE
XXX — ROOM NAME; XXX — ROOM NUMBER	NOT IN THE SCOPE OF WORK
XX — WALL / PARTITION TYPE	FLOOR FINISH TRANSITION
XX — STRUCTURAL GRID COMPONENT	EXISTING DOOR ASSEMBLY TO BE REMOVED
℄ — CENTER LINE	EXISTING DOOR ASSEMBLY TO REMAIN
FLOOR BOX W/ PLATE	DOOR NUMBER; NEW DOOR ASSEMBLY
X — REVISION NUMBER; REVISION CLOUD	EXISTING SYSTEMS FURNITURE TO BE REMOVED

X — ELEVATION NUMBER; X — SHEET NUMBER	
X / XX — DETAIL / SECTION NUMBER; SHEET NUMBER	
X — FURNITURE / EQUIPMENT TAG	
FINISH ELEVATION	
EXISTING 24"x 24" ACT & GRID REMAIN	
EXISTING 24"x 24" ACT & GRID TO BE ADJUSTED TO ALLOW FOR WALL	
EXISTING 24"x 24" ACT & GRID ADJUSTED ALLOWING FOR WALL	

MATERIALS LEGEND

STEEL STUD	WOOD BLOCKING CONTINUOUS
STEEL RUNNER	WOOD BLOCKING NOT CONTINUOUS
ALUMINUM	PLYWOOD
BATT INSULATION	WOOD FINISH
CONCRETE	GYPSUM OR SAND
EXISTING TATE STEEL 24"x 24" FLOOR PANEL SYSTEM TO REMAIN	CARPET
EXISTING STEEL 24"x 24" FLOOR PANEL TO BE MODIFIED	EXISTING FLOOR PANEL W/ ELECTRICAL / DATA FLOOR BOX TO BE RELOCATED
EXISTING MODIFIED STEEL 24"x 24" FLOOR PANEL	EXISTING RELOCATED FLOOR PANEL SYSTEM W/ ELECTRICAL / DATA FLOOR BOX

MERIDIEN GROUP

MERIDIEN GROUP, LLC
208 SOUTH KING ST. SUITE 303
LEESBURG, VA 20175
(703) 777-8285
www.meridiengroupllc.com

DCA CITADEL
ARCHITECTURE | HISTORIC PRESERVATION | PLANNING | DESIGN

CERTIFICATIONS

KEY PLAN

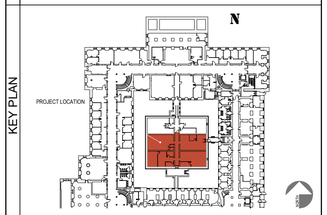

REVISION NOTES

MARK	DATE	DESCRIPTION

GRAPHIC SCALE

CAUTION: IF THIS DRAWING IS A REDUCTION THIS GRAPHIC SCALE MUST BE USED

CONTRACTORS	A/E CON. NO.	
	A/E TASK NO.	
	CONS. CONTR	
	CONS. WORK	
	PRIME A/E	MERIDIEN GROUP / CITADEL DCA
	SUB A/E	
BUILDING	NAME	
	STREET	
	CITY/ST./ZIP	WASHINGTON, DC
	BUILDING NO.	DC-
	OTHER	
	BUILDING NOs.	
	FACILITY CODE	
PROJECT	PROJECT TITLE	FEDERAL OFFICE BUILDING MT 1125 OFFICE RENOVATION
	PROJECT DESCRIPTION	RENOVATION OF FIRST FLOOR SUITE AND UPGRADE SECURITY
	PROJECT NO.	MT1125_26_005
	GSA PM	BARBARA CHOATE
	SUBMISSION	100% SUBMISSION REV-3
	SUB. DATE	15 JUNE 2026
DRAWING	DRAWING TITLE	NOTES, SYMBOLS AND ABBREVIATIONS
	FILE NAME	
	FLOOR NO.	1ST FLOOR
	DRAWN BY	AGF DATE DRAFTED: 04/24/2026
	CHECKED BY	LSP SHEET SIZE: 24 x 36
	DRAWING NO.	G- 002
		DISCIPLINE SHEET TYPE SEQUENCE
		SHEET 02 OF 28

PHYSICAL AND TECHNICAL SECURITY STANDARDS

CONSTRUCTION MUST COMPLY WITH THE IC TECH SPEC FOR ICD/ICS 705

1. PERIMETER SECURITY

1.1 THE PERIMETER OF THE SECURE SPACE INCLUDES ALL PERIMETER WALLS, WINDOWS, AND DOORS AS WELL AS THE CEILING AND FLOOR.

1.2 THE PERIMETER OF THE SECURE SPACE SHALL PROVIDE A PHYSICAL BARRIER TO FORCED, COVERT AND SURREPTITIOUS ENTRY.

1.3 WALLS, FLOOR AND CEILING SHALL BE PERMANENTLY AND SOLIDLY CONSTRUCTED AND ATTACHED TO EACH OTHER. RAISED FLOORS AND FALSE CEILINGS SHALL NOT BE USED TO ANCHOR WALL SUPPORT MATERIALS. ALL CONSTRUCTION, TO INCLUDE ABOVE THE FALSE CEILING AND BELOW A RAISED FLOOR, SHALL BE CONSTRUCTED TO PROVIDE VISUAL EVIDENCE OF UNAUTHORIZED PENETRATION.

1.4 WHEN AN EXISTING WALL IS CONSTRUCTED WITH SUBSTANTIAL MATERIAL **(E.G., BRICK, CONCRETE, CINDER BLOCK, ETC.)** EQUAL TO MEET THE PERIMETER WALL CONSTRUCTION STANDARDS, THE EXISTING WALL MAY BE UTILIZED TO SATISFY THE SPECIFICATION.

1.5 PERIMETER WALL CONSTRUCTION SPECIFICATIONS VARY BY THE TYPE OF SECURE SPACE OPERATIONS, LOCATION, USE OF SECURITY IN DEPTH (SID), AND DISCUSSION REQUIREMENTS.

2. SOUND GROUPS RATING

2.1 THE ABILITY OF A SECURE SPACE STRUCTURE TO RETAIN SOUND WITHIN THE PERIMETER IS RATED USING A DESCRIPTIVE VALUE, THE SOUND TRANSMISSION CLASS (STC). TO SATISFY THE NORMAL SECURITY STANDARDS OF SECURE SPACES, THE FOLLOWING TRANSMISSION ATTENUATION GROUPS HAVE BEEN ESTABLISHED:

2.1.1 SOUND GROUP 3 - STC 45 OR BETTER: THE SECURE SPACE PERIMETER SHALL BE DESIGNED AND CONSTRUCTED TO MEET SOUND GROUP 3 OR BETTER STANDARDS.

2.1.2 SOUND GROUP 4 - STC 50 OR BETTER : AREAS THAT PROVIDE FOR AMPLIFIED CONVERSATIONS, SUCH AS CONFERENCE CENTERS, VIDEO TELECONFERENCE (VTC) ROOMS, OR SIMILAR AREAS, SHALL BE DESIGNED AND CONSTRUCTED TO MEET SOUND GROUP 4 STANDARDS.

2.2 THIS IS NOT INTENDED TO PROTECT AGAINST DELIBERATE TECHNICAL INTERCEPTION OF AUDIO EMANATIONS.

2.3 IF AMPLIFIED SOUND EMPLOYMENT IS ANTICIPATED, SUCH AS CONFERENCE ROOM VTC, THE FACILITY NORMALLY MUST MEET SOUND TRANSMISSION CLASS (STC) REQUIREMENTS OF STC-50 FOR WALLS AND DOORS.

3. PERIMETER WALL CONSTRUCTION

WALL TYPE C (FROM ICD/ICS 705) - SUGGESTED STANDARD ACOUSTIC WALL FOR NEWLY CONSTRUCTED WALL AT ENTRANCE AS FOLLOWS:
(SEE CONSTRUCTION DRAWING FOR DETAILS).

3.1 3 5/8 INCH MINIMUM 16-GAUGE STUDS @ 16 INCHES o.c. WITH:

3..1.1 THREE LAYERS 5/8 INCH-THICK GYPSUM WALLBOARD (GWB) AS FOLLOWS: TWO LAYERS ON THE UNCONTROLLED SIDE OF THE SECURE SPACE AND ONE ON THE CONTROLLED SIDE OVER A MINIMUM 1/2 INCH PLYWOOD ON THE CONTROLLED SIDE OF THE SECURE SPACE.

3.1.2 1/2 INCH PLYWOOD AFFIXED 8' VERTICAL BY 4' HORIZONTAL TO 16-GAUGE STUDS USING GLUE AND #10 STEEL TAPPING SCREWS AT 12 O.C.

3.1.3 GWB SHALL BE MOUNTED TO PLYWOOD WITH SCREWS AVOIDING CONTACT WITH STUDS TO MITIGATE ANY POSSIBLE ACOUSTIC FLANKING PATH.

3.1.4 THE INTERIOR TWO LAYERS OF WALLBOARD SHALL BE MOUNTED SO THAT THE SEAMS DO NOT ALIGN (I.E., STAGGER JOINTS).

3.2 ACOUSTIC FILL 3 ½ " SOUND ATTENUATION MATERIAL, FASTENED TO PREVENT SLIDING DOWN AND LEAVING VOID AT THE TOP.

3.3 THE TOP AND BOTTOM OF EACH WALL SHALL BE SEALED WITH AN ACOUSTIC SEALANT WHERE IT MEETS THE SLAB. USE FIRE SAFE NON-SHRINK GROUT, OR ACOUSTIC SEALANT IN ALL VOIDS ABOVE/BELOW TRACK BOTH SIDES OF PARTITION.

3.4 ENTIRE WALL ASSEMBLY SHALL BE FINISHED AND PAINTED FROM TRUE FLOOR TO TRUE CEILING.

4. SECURE SPACE PENETRATIONS CRITERIA

4.1 ALL PENETRATIONS OF PERIMETER WALLS SHALL BE KEPT TO A MINIMUM.

4.2 UTILITIES SERVICING AREAS OTHER THAN THE SPACE SHALL NOT TRANSIT THE SPACE UNLESS MITIGATED WITH AO APPROVAL.

4.3 UTILITIES SHOULD ENTER THE SPACE AT A SINGLE POINT.

4.4 ALL UTILITY (POWER AND SIGNAL) DISTRIBUTION ON THE INTERIOR OF A PERIMETER WALL TREATED FOR ACOUSTICS OR RF SHALL BE SURFACE MOUNTED, CONTAINED IN A RACEWAY, OR AN ADDITIONAL WALL SHALL BE CONSTRUCTED USING FURRING STRIPS AS STAND OFF FROM THE EXISTING WALL ASSEMBLY. IF THE CONSTRUCTION OF AN ADDITIONAL WALL IS USED, GYPSUM BOARD MAY BE ¾ INCH THICK AND NEED ONLY GO TO THE FALSE CEILING.

4.5 INSTALLATION OF ADDITIONAL CONDUIT PENETRATION FOR FUTURE UTILITY EXPANSION IS PERMISSIBLE PROVIDED THE EXPANSION CONDUIT IS FILLED WITH ACOUSTIC FILL AND CAPPED (END OF PIPE COVER).

5. VENT AND DUCT WORK CRITERIA

5.1 ALL VENTS AND DUCTS SHALL BE PROTECTED TO MEET THE ACOUSTIC REQUIREMENTS OF THE SECURE SPACE (TYPICAL AIR Z-DUCT PENETRATION FOR EXAMPLE.) ALL DUCTS SHALL BE ACOUSTICALLY LINED OR WRAPPED. A NEOPRENE, CANVAS OR OTHER NON-METALLIC MATERIAL SECTIONS ARE REQUIRED TO BE INSTALLED WITHIN 6 INCHES OF THE PERIMETER WALL TO ENSURE ACOUSTIC PROTECTION FOR THE DUCT.

5.2 HEATING VENTILATION AND AIR CONDITIONING (HVAC) VENTILATION DUCTS MUST HAVE VIBRATION ISOLATION INSTALLED WITHIN 6" OF EXITING THE SECURE SPACE AND ACOUSTIC TREATMENT. A "Z-TYPE" DUCT IS AN EXAMPLE OF ACOUSTICAL ATTENUATION FOR A RETURN DUCT.

5.3 WALLS SURROUNDING DUCT PENETRATIONS SHALL BE FINISHED TO ELIMINATE ANY OPENING BETWEEN DUCT AND THE WALL.

5.4 ALL VENTS OR DUCT OPENINGS THAT PENETRATE THE PERIMETER WALLS OF A SECURE SPACE AND EXCEED 96 SQUARE INCHES SHALL BE PROTECTED WITH PERMANENTLY AFFIXED BARS OR GRILLS.

5.5 IF ONE DIMENSION OF THE PENETRATION MEASURES LESS THAN 6 INCHES, BARS OR GRILLS ARE NOT REQUIRED.

5.6 WHEN METAL SOUND BAFFLES OR WAVE FORMS ARE PERMANENTLY INSTALLED AND SET NO FARTHER APART THAN 6 INCHES IN ONE DIMENSION, THEN BARS OR GRILLS ARE NOT REQUIRED.

5.7 IF BARS ARE USED, THEY SHALL BE A MINIMUM OF 1/2 INCH DIAMETER STEEL, WELDED VERTICALLY AND HORIZONTALLY 6 INCHES ON CENTER; A DEVIATION OF 1/2 INCH IN VERTICAL AND/OR HORIZONTAL SPACING IS PERMISSIBLE.

5.8 IF GRILLES ARE USED, THEY SHALL BE OF:

5.8.1 1- 3/4 INCH-MESH, #9 (10 GAUGE), CASE-HARDENED, EXPANDED METAL; OR

5.8.2 EXPANDED METAL DIAMOND MESH, 1-1/2" #10 (1-3/8" BY 3" OPENINGS, 0.093" THICKNESS, WITH AT LEAST 80% OPEN DESIGN) TAMPERPROOF; OR

5.8.3 WELDED WIRE FABRIC (WWF) 4x4 W2.9 x W2.9 (6-GAUGE SMOOTH STEEL WIRE WELDED VERTICALLY AND HORIZONTALLY 4 INCHES o.c.).

5.8.4 IF BARS OR GRILL ARE REQUIRED, AN ACCESS PORT SHALL BE INSTALLED INSIDE THE SECURE PERIMETER OF THE SPACE TO ALLOW VISUAL INSPECTION OF THE BARS OR GRILL.

6. ELECTRICAL COMPONENTS CRITERIA

6.1 METALLIC DRAIN PIPING THOUGH A SECURE SPACE (SS)MUST HAVE A DIELECTRIC BREAK WITHIN 6 IN OF EXIT. ALL DRAIN PIPING MUST BE ACOUSTICALLY PROTECTED.

6.2 PROVIDE AN ISOLATION TRANSFORMER WITHIN LOCAL ELECTRICAL ROOM OR SS LAN ROOM. IF AN ISOLATION TRANSFORMER IS INSTALLED WITHIN THE SS LAN ROOM, NO SEPARATE RED/BLACK POWER PANELS ARE REQUIRED. ALL ELECTRICAL LOADS SHOULD BE FED BY THE ELECTRICAL PANEL(S) LOCATED WITHIN LOCAL ELECTRICAL ROOM OR SS LAN ROOM.

6.3 A SEPARATION DISTANCE OF 30 CM SHALL BE PROVIDED BETWEEN RED EQUIPMENT AND BLACK WIRE LINES THAT DIRECTLY LEAVE THE INSPECTABLE SPACE.

6.4 FOR SMALLER ELECTRICAL LOAD SSS, AN UNINTERRUPTIBLE POWER SUPPLY (UPS) MAY BE USED IN LIEU OF AN ISOLATION TRANSFORMER. THE UPS UNIT MUST BE A FULL CONVERSION, I.E., AC-DC-AC TYPE.

6.5 FIBER IS PREFERRED OVER WIRED CABLING ENTERING THE SS. CABLE TV OR OTHER COAXIAL CABLE MUST BE FIBER WHEN PENETRATING THE SS PERIMETER WALL. ALL OTHER METALLIC CABLING MUST BE SHIELDED.

6.6 GROUNDING

6.6.1 A GROUNDING POINT MUST BE PROVIDED WITHIN THE SS, PREFERABLY IN THE SS LAN ROOM.

6.6.2 FORTUITOUS CONDUCTORS. ALL PIPES, CONDUITS, AND METALLIC TUBING (NEW AND EXISTING) SHOULD BE GROUNDED AT THE SECURE SPACE (SS) PERIMETER WALL EXIT POINT, WITHIN 6 IN OF EXIT.

6.6.3 ANY EXISTING WIRING OR PIPING THAT WILL NOT BE USED MUST BE REMOVED. FOR NEW WORK, DIELECTRIC BREAKS MAY BE INSTALLED BETWEEN THE GROUNDING CLAMP AND PERIMETER WALL OR IN PERIMETER WALL ITSELF.

6.6.4 NO DIELECTRIC BREAK REQUIRED IN FIRE SUPPRESSION, SPRINKLER PIPING

6.6.5 FOR GROUNDING USE STANDARD METALLIC CLAMPS, #14 AWG OR LARGER GAUGE COPPER WIRE, STRANDED COPPER, WIRE, OR BRAIDED STRAP, AND BOND TO BUILDING GROUND. GROUNDING RESISTANCE SHOULD NOT EXCEED 1 MILLIOHM.

6.6.6 RECORD GROUNDING CONNECTIONS, ELECTRICAL PANEL, TRANSFORMER NAME PLATE VIA PHOTOGRAPHIC MEANS.

7. GENERAL SECURE SPACE INTRUSION DETECTION SYSTEM (IDS) REQUIREMENTS

7.1 IDS SHALL DETECT ATTEMPTED OR ACTUAL UNAUTHORIZED HUMAN ENTRY INTO A SECURE SPACE. (SEE CHAPTER 7 OF THE ICD/ICS 705).

7.2 SPACE SHALL BE PROTECTED BY IDS WHEN NOT OCCUPIED.

7.3 INTERIOR AREAS OF A SPACE THROUGH WHICH REASONABLE ACCESS COULD BE GAINED, INCLUDING WALLS COMMON TO AREAS NOT PROTECTED AT THE SCI LEVEL, SHALL BE PROTECTED BY IDS.

7.4 DOORS WITHOUT ACCESS CONTROL SYSTEMS AND THAT ARE NOT UNDER CONSTANT VISUAL OBSERVATION SHALL BE CONTINUOUSLY MONITORED BY THE IDS.

7.5 REQUIREMENTS FOR ELECTRICAL POWER

7.5.1 IN THE EVENT OF PRIMARY POWER FAILURE, THE SYSTEM SHALL AUTOMATICALLY TRANSFER TO AN EMERGENCY ELECTRICAL POWER SOURCE WITHOUT CAUSING ALARM ACTIVATION.

7.5.2 TWENTY-FOUR HOURS OF UNINTERRUPTIBLE BACKUP POWER IS REQUIRED AND SHALL BE PROVIDED BY BATTERIES, AN UNINTERRUPTIBLE POWER SUPPLY (UPS), GENERATORS, OR ANY COMBINATION.

8. SECURE SPACE DOOR CRITERIA

8.1 DOOR TYPE DEFINITIONS

8.1.1 PRIMARY DOOR: A SECURE SPACE PERIMETER DOOR RECOGNIZED AS THE MAIN ENTRANCE. **THERE SHALL BE ONLY ONE PRIMARY DOOR TO A SECURE SPACE.**

8.1.2 SECONDARY DOOR: A SECURE SPACE PERIMETER DOOR EMPLOYED AS BOTH AN ENTRY AND EGRESS DOOR THAT IS NOT THE PRIMARY DOOR.

8.1.3 EMERGENCY EGRESS-ONLY DOOR: A SECURE SPACE PERIMETER DOOR EMPLOYED AS AN EMERGENCY EGRESS DOOR WITH NO ENTRY CAPABILITY.

8.2 THE ACCREDITING OFFICIALS (AO) MUST APPROVE ADDITIONAL ENTRANCE DOORS FOR USE BY SECURE SPACE RESIDENTS PROVIDED THAT THE DOORS ARE EQUIPPED WITH AN APPROVED ACCESS CONTROL SYSTEM AND ARE SECURED WITH AN APPROVED DEAD BOLT OR LOCK WHEN THE SPACE IS NOT OCCUPIED. THE DEADBOLT SHALL NOT BE ACCESSIBLE FROM THE EXTERIOR.

8.3 CRITERIA FOR ALL SECURE SPACE PERIMETER DOORS

8.3.1 SECURE SPACE DOORS & FRAME ASSEMBLIES SHALL MEET ACOUSTIC REQUIREMENTS UNLESS DECLARED A NON-DISCUSSION AREA. DOOR'S SERVICING AREAS BUILT TO STC LEVEL 4 OR 5 REQUIRE A SPECIALIZED ACOUSTIC RATED ASSEMBLY.

8.3.2 PERIMETER DOORS SHALL COMPLY WITH APPLICABLE BUILDING, SAFETY, AND ACCESSIBILITY CODES AND REQUIREMENTS.

8.3.3 ALL PERIMETER DOORS SHALL BE ALARMED IN ACCORDANCE WITH INTRUSION DETECTION SYSTEM (IDS) STANDARDS.

8.3.4 ALL PERIMETER DOORS SHALL BE EQUIPPED WITH A 30 SECOND AUTOMATIC NON-HOLD DOOR-CLOSER WHICH SHALL BE INSTALLED INTERNAL TO THE SPACE.

8.3.5 HINGE PINS THAT ARE ACCESSIBLE FROM OUTSIDE OF THE SPACE DOOR SHALL BE MODIFIED TO PREVENT REMOVAL OF THE DOOR, E.G., WELDED, SET SCREWS, ETC.

8.3.6 PARTICULAR ATTENTION MUST BE PAID TO THE DOOR FRAME, SWEEPS, AND DOOR CLOSER AS THESE ARE AREAS PARTICULARLY VULNERABLE TO SOUND LEAKAGE AND ARE MOST COMMONLY THE REASON FOR FAILURE TO MEET THE STC CONSTRUCTION STANDARD.

8.3.7 IT IS RECOMMENDED THAT A CERTIFIED COMMERCIAL CONTRACTOR TO INSTALL THE PREFABRICATED DOORS STC-50 OR HIGHER RATED DOOR.

8.3.8 SECURE SPACE PERIMETER DOORS SHALL BE PROTECTED BY A HIGH SECURITY SWITCH (HSS) AND A MOTION DETECTION SENSOR SUCH AS PASSIVE INFRARED SENSOR (PIR).

8.4 PRIMARY DOOR CRITERIA

8.4.1 THERE SHALL BE ONLY ONE PRIMARY DOOR TO A SECURE SPACE.

8.4.2 SHALL BE EQUIPPED WITH GSA-APPROVED PEDESTRIAN DOOR DEADBOLT MEETING THE MOST CURRENT VERSION OF FEDERAL SPECIFICATION FF-L-2890. STANDALONE AND FLUSH MOUNTED DEAD BOLTS ARE PROHIBITED.

8.4.3 IT SHALL BE EQUIPPED WITH A COMBINATION LOCK MEETING THE MOST CURRENT VERSION OF FEDERAL SPECIFICATION FFL- 2740.

8.4.4 IT SHALL BE EQUIPPED WITH AN APPROVED ACCESS CONTROL DEVICE (ACD) (SEE CHAPTER 8 OF THE ICD / ICS 705). THE ACD MAY BE EQUIPPED WITH A BY-PASS KEYWAY FOR USE IN THE EVENT OF AN ACCESS CONTROL SYSTEM FAILURE.

8.5 EMERGENCY EXIT DOORS (IF REQUIRED) SHALL

8.5.1 BE SECURED WITH 3-POINT DEADLOCKING PANIC HARDWARE ON THE INSIDE

8.5.2 HAVE NO EXTERIOR HARDWARE.

8.5.3 BE ALARMED 24/7

8.5.4 PROVIDE A LOCAL AUDIBLE ANNUNCIATION WHEN OPENED

8.6 WOOD DOORS

8.6.1 WOOD DOORS SHALL BE 1 3/4 INCH-THICK SOLID WOOD CORE (WOOD STAVE)

8.7 STEEL DOORS SHALL MEET FOLLOWING SPECIFICATIONS:

8.7.1 1 ¾ INCH-THICK FACE STEEL EQUAL TO 18 GAUGE

8.7.2 HINGES REINFORCED TO 7 GAUGE

8.7.3 DOOR CLOSURE REINFORCED TO 12 GAUGE

8.7.4 LOCK AREA PREDRILLED AND/OR REINFORCED TO 10 GAUGE

9. WINDOWS CRITERIA

9.1 EVERY EFFORT SHOULD BE MADE TO MINIMIZE OR ELIMINATE WINDOWS IN THE SPACE, ESPECIALLY ON THE GROUND FLOOR.

9.2 WINDOWS SHALL BE NON-OPENING.

9.3 WINDOWS SHALL BE PROTECTED BY SECURITY ALARMS WHEN THEY ARE WITHIN 18 FEET OF THE GROUND OR AN ACCESSIBLE PLATFORM.

9.4 WINDOWS SHALL PROVIDE VISUAL AND ACOUSTIC PROTECTION.

10. FLOOR AND CEILING CRITERIA

10.1 FLOORS AND CEILINGS SHALL BE CONSTRUCTED TO MEET THE SAME STANDARDS FOR FORCE PROTECTION AND ACOUSTIC PROTECTION AS WALLS.

10.2 ALL FLOOR AND CEILING PENETRATIONS SHALL BE KEPT TO A MINIMUM.

11. TEMPEST CRITERIA

11.1 RF SHIELDING FOIL INSTALLATION IS DEPENDENT ON THE INFORMATION ABOVE REGARDING THE SS SEPARATION DISTANCE FROM OTHERS, I.E., DETERMINATION OF THE INSPECTABLE SPACE BY THE CERTIFIED TEMPEST TECHNICAL AUTHORITY (TREASURY (OIA) CTTA). ALL WALLS, CEILINGS, AND FLOORS MUST BE FOILED.

11.2 RADIO FREQUENCY (RF) SHIELDING PROTECTION FOR SECURE SPACE PERIMETER

11.2.1 RF PROTECTION SHALL BE INSTALLED AT THE DIRECTION OF THE CTTA WHEN A SECURE SPACE UTILIZES ELECTRONIC PROCESSING AND DOES NOT PROVIDE ADEQUATE RF ATTENUATION AT THE INSPECTABLE SPACE BOUNDARY. IT IS RECOMMENDED FOR ALL APPLICATIONS WHERE RF INTERFERENCE FROM THE OUTSIDE OF THE SPACE IS A CONCERN INSIDE THE SPACE.

11.2.2 INSTALLATION OF RF PROTECTION SHOULD BE DONE USING EITHER THE DRAWINGS OR *BEST PRACTICES GUIDELINES FOR ARCHITECTURAL RADIO FREQUENCY SHIELDING*, PREPARED BY THE TECHNICAL REQUIREMENTS STEERING COMMITTEE UNDER THE CENTER FOR SECURITY EVALUATION. THIS DOCUMENT IS AVAILABLE THROUGH THE CENTER FOR SECURITY EVALUATION, OFFICE OF THE DIRECTOR OF NATIONAL INTELLIGENCE (ONCIX/CSE).

11.2.3 RF INSTALLATION ON THE WALLS | NEW WALLS:

OPTION 1: FOIL SHOULD BE INSTALLED BETWEEN THE TWO INNER LAYERS (SS) OF GWB.
OPTION 2: INSTALL ONE LAYER OF FOIL BACK GYPSUM BOARD OVER ONE LAYER OF GYPSUM BOARD ON THE SS OF THE WALL.

IN BOTH OPTIONS, THE GWB PANELS SHOULD BE INSTALLED WITH STAGGERED JOINTS, AND THE INSTALLATION SHOULD BE IN A MANNER TO PROTECT THE FOIL.

11.2.4 RF INSTALLATION ON THE WALLS | EXISTING WALLS:

OPTION 1A: EMI CONDUCTIVE FABRIC OR EMI SHIELDING LAMINATES: THESE TYPES OF SHIELDS ARE PERFECT FOR ISOLATING ASSEMBLIES ALREADY IN PLACE WITHOUT NEEDING TO DO ANY DEMOLITION.

OPTION 1B: CONDUCTIVE FABRIC TAPE EMI AND RFI TAPE VARIETIES

11.2.5 THE CEILING WOULD BE CAPPED ABOVE CURRENT CEILING TILES ALLOWING FOR THE INSTALLATION OF RF FOIL, THUS ALLOWING COMPLETING THE 6-SIDED RF FOIL BOX. CAPPED CEILING CAN BE COVERED WITH GYPSUM BOARD AND PAINTED TO MATCH COLOR BELOW CEILING TILES.

11.3 THE ENTRANCE WALL WILL NEED TO MEET THE STC-50 CRITERIA WITH FOIL BACK GYPSUM BOARD USED FOR RF MITIGATION. AREAS ABOVE THE CEILING THAT WERE NOT VERIFIED AS CONCRETE EXTERIOR WALLS MUST BE COVERED WITH FOIL BACKED GYPSUM BOARD AND BROUGHT UP TO STC-50 RATING.

11.4 WINDOW TREATMENT MAY CONSIST OF RF-SHIELDING FILM AND PHYSICAL/VISUAL RESTRICTIONS. CTTA, APPROVED THE USE OF FOIL BACKED GYPSUM BOARD AS A MEANS OF MITIGATION. BASED ON STANDOFF DISTANCE AND SIDS.

11.5 USE VOIPS, VIPER, OR TSG-6 TYPE APPROVED PHONES FOR UNCLASSIFIED SERVICE IN THE SS. SEE CNSS 5000, 5002, AND 5006 FOR DETAILS INCLUDING APPROVED VOIP DEVICES. THE CALL MANAGER MUST BE INSTALLED WITHIN A PROTECTED ROOM. THIS WILL BE AT THE DISCRETION OF CIO FOR THE TYPE OF PHONES THAT CAN SUPPORT THE ENVIRONMENT.

11.6 GENERAL ANNOUNCEMENT SPEAKERS MUST HAVE ISOLATION TRANSFORMERS OR SIMILAR. THIS ALSO APPLIES TO FIRE ALARM SPEAKER ANNUNCIATORS, NOT ELECTRONIC AIR HORN TYPE.

11.7 THE ENCRYPTION/DECRYPTION DEVICE SHOULD BE INSTALLED IN THE SERVER ROOM, NORMALLY A PART OF THE SS TO PRECLUDE THE NEED FOR AN ALARMED PROTECTED DISTRIBUTION SYSTEM (PDS). A PDS IS NOT AUTHORIZED.

11.8 NO WIRELESS DEVICES ARE ALLOWED IN THE SS.

MERIDIEN GROUP

MERIDIEN GROUP, LLC
208 SOUTH KING ST. SUITE 303
LEESBURG, VA 20175
(703) 777-8285
www.meridiengroupllc.com

DCA CITADEL
ARCHITECTURE | HISTORIC PRESERVATION | PLANNING | DESIGN

CERTIFICATIONS

KEY PLAN

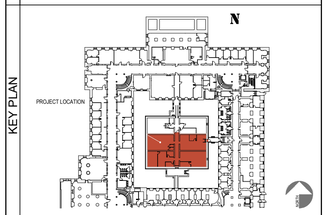

REVISION NOTES

MARK	DATE	DESCRIPTION

GRAPHIC SCALE

CAUTION: IF THIS DRAWING IS A REDUCTION THIS GRAPHIC SCALE MUST BE USED

CONTRACTORS	
A/E CON. NO.	
A/E TASK NO.	
CONS. CONTR	
CONS. WORK	
PRIME A/E	MERIDIEN GROUP / CITADEL DCA
SUB A/E	

BUILDING	
NAME	
STREET	
CITY/ST./ZIP	WASHINGTON, DC
BUILDING NO.	DC-
OTHER	
BUILDING NOs.	
FACILITY CODE	

PROJECT	
PROJECT TITLE	FEDERAL OFFICE BUILDING MT 1125 OFFICE RENOVATION
PROJECT DESCRIPTION	RENOVATION OF FIRST FLOOR SUITE AND UPGRADE SECURITY
PROJECT NO.	MT1125_26_005
GSA PM	BARBARA CHOATE
SUBMISSION	100% SUBMISSION REV-3
SUB. DATE	15 JUNE 2026

DRAWING	
DRAWING TITLE	PHYSICAL AND TECHNICAL SECURITY
FILE NAME	
FLOOR NO.	1ST FLOOR
DRAWN BY	AGF DATE DRAFTED: 04/24/2026
CHECKED BY	LSP SHEET SIZE: 24 x 36
DRAWING NO.	G- 003
	DISCIPLINE SHEET TYPE SEQUENCE
	SHEET 03 OF 28

MOLD REMEDIATION AND ENVIRONMENTAL RESTORATION – CRAC UNITS AND ASSOCIATED AREAS

1. GENERAL SCOPE

THE CONTRACTOR SHALL PROVIDE ALL LABOR, SUPERVISION, MATERIALS, EQUIPMENT, ENGINEERING CONTROLS, AND DISPOSAL NECESSARY TO PERFORM COMPREHENSIVE MOLD REMEDIATION, ENVIRONMENTAL CLEANING, AND RESTORATION SERVICES WITHIN THE MAIN TREASURY BUILDING. WORK SHALL INCLUDE FOUR (4) COMPUTER ROOM AIR CONDITIONING (CRAC) UNITS LOCATED IN SPACES 1125 (NEAR MT 1506D), MT B91 V5, MT B91 V?, AND THE MT 1ST FLOOR FRAME ROOM, AS WELL AS ASSOCIATED IMPACTED AREAS INCLUDING RAISED FLOORING SYSTEMS, SUBFLOOR SPACES, INSULATION SYSTEMS, CABLE TRAYS, AND ADJACENT FINISHES.

THE CONTRACTOR SHALL REMEDIATE KNOWN MICROBIAL CONTAMINATION IDENTIFIED AS *ASPERGILLUS* AND/OR *PENICILLIUM* SPECIES LOCATED WITHIN CRAC UNITS, ON INTERNAL COMPONENTS INCLUDING WIRING, HOSES, AND CELLULOSE INSULATION, AND WITHIN THE UNDERFLOOR PLENUM EXTENDING NO LESS THAN FIFTY (50) LINEAR FEET FROM THE FACE OF THE CRAC UNIT LOCATED NEAR MT 1506D. ALL WORK SHALL BE PERFORMED IN A MANNER THAT PREVENTS CROSS-CONTAMINATION, PROTECTS SENSITIVE INFRASTRUCTURE, AND RESTORES THE AFFECTED AREAS TO A CLEAN, DRY, AND ENVIRONMENTALLY CONTROLLED CONDITION.

2. INDUSTRIAL HYGIENE OVERSIGHT AND CLEARANCE

THE CONTRACTOR SHALL COORDINATE WITH AN INDEPENDENT THIRD-PARTY CERTIFIED INDUSTRIAL HYGIENIST (CIH), RETAINED BY THE GOVERNMENT OR APPROVED BY THE CONTRACTING OFFICER, TO PERFORM PRE-REMEDIATION ASSESSMENT, DEVELOP REMEDIATION PROTOCOLS AS REQUIRED, AND CONDUCT POST-REMEDIATION VERIFICATION (PRV). CLEARANCE SHALL INCLUDE AIR AND SURFACE SAMPLING AND SHALL DEMONSTRATE THAT MICROBIAL LEVELS ARE EQUAL TO OR LESS THAN ESTABLISHED OUTDOOR BASELINE LEVELS OR OTHERWISE MEET ACCEPTED INDUSTRY STANDARDS. NO AREA SHALL BE RETURNED TO SERVICE UNTIL WRITTEN CLEARANCE IS PROVIDED BY THE CIH AND APPROVED BY THE TREASURY OPERATIONS SAFETY AND HEALTH DIRECTOR.

THE CIH SHALL ENSURE THAT ALL SAMPLING CONDUCTED UNDER THIS SCOPE ADHERES TO STRICT QUALITY ASSURANCE AND QUALITY CONTROL (QA/QC) PROTOCOLS. CHAIN-OF-CUSTODY DOCUMENTATION SHALL BE MAINTAINED FOR ALL AIR AND SURFACE SAMPLES FROM THE TIME OF COLLECTION THROUGH LABORATORY ANALYSIS AND FINAL REPORTING. ALL SAMPLES SHALL BE ANALYZED BY AN ACCREDITED LABORATORY MEETING AMERICAN INDUSTRIAL HYGIENE ASSOCIATION (AIHA) ACCREDITATION REQUIREMENTS OR AN EQUIVALENT NATIONALLY RECOGNIZED ACCREDITATION BODY. LABORATORY REPORTS SHALL INCLUDE COMPLETE ANALYTICAL DATA, METHODOLOGIES, AND QA/QC VALIDATION SUFFICIENT TO SUPPORT DEFENSIBLE CLEARANCE DETERMINATIONS. ALL SAMPLING AND ANALYSIS SHALL BE PERFORMED IN ACCORDANCE WITH APPLICABLE AIHA, ACGIH, AND EPA GUIDANCE FOR MICROBIAL ASSESSMENT.

3. CONTAINMENT AND ENGINEERING CONTROLS

THE CONTRACTOR SHALL ESTABLISH FULL CONTAINMENT OF ALL WORK AREAS USING A MINIMUM OF 6-MIL FIRE-RETARDANT POLYETHYLENE BARRIERS. CONTAINMENT SHALL BE MAINTAINED UNDER NEGATIVE AIR PRESSURE BETWEEN -0.02 AND -0.05 INCHES WATER GAUGE RELATIVE TO ADJACENT SPACES, VERIFIED CONTINUOUSLY USING CALIBRATED MONITORING DEVICES. HEPA-FILTERED NEGATIVE AIR MACHINES AND AIR SCRUBBERS SHALL BE OPERATED CONTINUOUSLY WITHIN THE CONTAINMENT AREA TO ACHIEVE A MINIMUM OF FOUR (4) AIR CHANGES PER HOUR. ALL PENETRATIONS, SEAMS, AND JOINTS SHALL BE SEALED TO PREVENT THE MIGRATION OF CONTAMINANTS. CRITICAL BARRIERS SHALL BE INSTALLED TO ISOLATE SENSITIVE ADJACENT SPACES, INCLUDING TELECOMMUNICATIONS ROOMS, BAS INFRASTRUCTURE, AND OCCUPIED AREAS. DECONTAMINATION CHAMBERS SHALL BE ESTABLISHED FOR PERSONNEL AND MATERIAL TRANSFER.

4. HVAC AND CRAC SYSTEM CONTROL

ALL AFFECTED CRAC UNITS SHALL BE DE-ENERGIZED, LOCKED OUT/TAGGED OUT (LOTO), AND ISOLATED PRIOR TO COMMENCEMENT OF WORK. THE CONTRACTOR SHALL IMPLEMENT MEASURES TO PREVENT THE DISTRIBUTION OF AIRBORNE CONTAMINANTS THROUGH MECHANICAL SYSTEMS, INCLUDING SEALING DUCT OPENINGS AND ISOLATING AIRFLOW PATHWAYS. NO SYSTEM SHALL BE RETURNED TO OPERATION UNTIL REMEDIATION, CLEANING, AND CLEARANCE HAVE BEEN COMPLETED AND APPROVED BY THE CIH AND THE TREASURY OPERATIONS SAFETY AND HEALTH DIRECTOR.

5. REMOVAL AND DISPOSAL OF CONTAMINATED MATERIALS

THE CONTRACTOR SHALL REMOVE ALL CONTAMINATED CELLULOSE INSULATION LOCATED WITHIN CRAC UNITS AND BENEATH RAISED FLOORING SYSTEMS IN ALL IDENTIFIED AREAS. ALL REMOVAL SHALL BE PERFORMED UNDER CONTAINMENT CONDITIONS USING METHODS THAT MINIMIZE DISTURBANCE AND AEROSOLIZATION. CONTAMINATED MATERIALS SHALL BE DOUBLE-BAGGED IN 6-MIL POLYETHYLENE BAGS, SEALED, LABELED, AND TRANSPORTED IN ACCORDANCE WITH APPLICABLE FEDERAL, STATE, AND LOCAL REGULATIONS. THE CONTRACTOR SHALL PROVIDE DISPOSAL MANIFESTS AND DOCUMENTATION VERIFYING PROPER DISPOSAL. THE CONTRACTOR SHALL PROVIDE UNIT PRICING FOR THE REMOVAL AND REPLACEMENT OF ADDITIONAL CELLULOSE INSULATION ASSOCIATED WITH PIPING SYSTEMS, INCLUDING 1-INCH, 1½-INCH, 2-INCH, AND 3-INCH DIAMETER PIPE, EXPRESSED AS COST PER LINEAR FOOT. ADDITIONALLY, THE CONTRACTOR SHALL PROVIDE UNIT PRICING FOR INSULATION REMOVAL AND REPLACEMENT AT VALVES CORRESPONDING TO THESE PIPE SIZES.

6. DIFFERING SITE CONDITIONS AND ADDITIONAL CONTAMINATION

THE CONTRACTOR IS ADVISED THAT THE EXTENT OF MICROBIAL CONTAMINATION IDENTIFIED IN THIS SOW IS BASED ON CURRENTLY KNOWN CONDITIONS. ADDITIONAL CONTAMINATION MAY BE ENCOUNTERED DURING THE COURSE OF WORK, PARTICULARLY WITHIN CONCEALED SPACES SUCH AS RAISED FLOORING SYSTEMS, CRAC UNITS, PIPING INSULATION, AND ADJACENT BUILDING MATERIALS.

IN THE EVENT THAT ADDITIONAL OR PREVIOUSLY UNIDENTIFIED CONTAMINATION IS DISCOVERED, THE CONTRACTOR SHALL IMMEDIATELY STOP WORK IN THE AFFECTED AREA, SECURE THE AREA TO PREVENT CROSS-CONTAMINATION, AND NOTIFY THE CONTRACTING OFFICER (CO) AND THE DESIGNATED GOVERNMENT REPRESENTATIVE. NO ADDITIONAL REMEDIATION WORK BEYOND THE DEFINED SCOPE SHALL PROCEED IN THE AFFECTED AREA WITHOUT WRITTEN DIRECTION FROM THE CONTRACTING OFFICER.

WHERE APPLICABLE, PRE-ESTABLISHED UNIT PRICING INCLUDED IN THIS CONTRACT, INCLUDING BUT NOT LIMITED TO PIPE INSULATION (BY DIAMETER), VALVE INSULATION, AND ADDITIONAL MATERIAL REMOVAL AND REPLACEMENT, SHALL BE UTILIZED TO ADDRESS EXPANDED SCOPE. THE CONTRACTOR SHALL PROVIDE PROMPT NOTIFICATION AND A QUANTIFIED ASSESSMENT OF THE ADDITIONAL WORK, INCLUDING ESTIMATED QUANTITIES AND ASSOCIATED COSTS BASED ON THE AGREED UNIT PRICING STRUCTURE.

FOR ADDITIONAL WORK NOT COVERED UNDER ESTABLISHED UNIT PRICING, THE CONTRACTOR SHALL SUBMIT A PROPOSAL FOR REVIEW AND APPROVAL BY THE CONTRACTING OFFICER PRIOR TO PROCEEDING. THE CONTRACTOR SHALL PROCEED WITH ADDITIONAL REMEDIATION WORK ONLY UPON WRITTEN AUTHORIZATION FROM THE CONTRACTING OFFICER. ANY UNAUTHORIZED WORK PERFORMED OUTSIDE THE APPROVED SCOPE SHALL BE AT THE CONTRACTOR'S SOLE RISK.

A NOT-TO-EXCEED (NTE) THRESHOLD FOR ADDITIONAL REMEDIATION WORK MAY BE ESTABLISHED BY THE CONTRACTING OFFICER TO ALLOW LIMITED CONTINUATION OF WORK IN ORDER TO MAINTAIN CONTAINMENT INTEGRITY OR PREVENT FURTHER CONTAMINATION SPREAD. ANY WORK PERFORMED UNDER SUCH AUTHORIZATION SHALL BE FULLY DOCUMENTED AND RECONCILED WITH FINAL QUANTITIES AND COSTS.

ALL DISCOVERIES OF ADDITIONAL CONTAMINATION, ACTIONS TAKEN, AND COORDINATION WITH THE CONTRACTING OFFICER SHALL BE DOCUMENTED IN DAILY LOGS, INCLUDING LOCATION, EXTENT, AND RESOLUTION.

7. CLEANING, DISINFECTION, AND SURFACE TREATMENT

ALL EXPOSED SURFACES WITHIN THE CONTAINMENT AREA, INCLUDING, BUT NOT LIMITED TO, CRAC INTERIORS, WIRING, HOSES, METAL FLOORING, THE UNDERSIDE OF RAISED FLOOR PANELS, CABLE TRAYS, AND STRUCTURAL ELEMENTS, SHALL BE THOROUGHLY CLEANED AND DISINFECTED. CLEANING SHALL INCLUDE HEPA VACUUMING FOLLOWED BY APPLICATION OF A TREASURY-APPROVED BIOCIDE SUCH AS VITALOXIDE OR CONCROBIUM. BIOCIDE APPLICATION SHALL BE PERFORMED IN ACCORDANCE WITH MANUFACTURER SPECIFICATIONS AND ALLOWED APPROPRIATE DWELL TIME. SURFACES SHALL BE PHYSICALLY AGITATED WHERE NECESSARY TO REMOVE MICROBIAL GROWTH AND RESIDUES. FOLLOWING CLEANING, ALL SURFACES SHALL BE DRIED TO PREVENT RECONTAMINATION. AT THE GOVERNMENT'S DISCRETION, ANTIMICROBIAL COATINGS MAY BE APPLIED TO CLEANED METAL SURFACES WITHIN CRAC UNITS AND SUBFLOOR ENVIRONMENTS TO INHIBIT FUTURE MICROBIAL GROWTH.

THE CONTRACTOR SHALL PERFORM DETAILED CLEANING AND REMEDIATION OF ALL AFFECTED CRAC UNITS TO ENSURE COMPLETE REMOVAL OF MICROBIAL CONTAMINATION AND RESTORATION OF OPERATIONAL INTEGRITY. ALL WORK SHALL BE PERFORMED UNDER CONTAINMENT CONDITIONS AND IN ACCORDANCE WITH MANUFACTURER RECOMMENDATIONS TO PREVENT DAMAGE TO EQUIPMENT.

THE CONTRACTOR SHALL CLEAN ALL COOLING COILS USING A NON-ACIDIC, COIL-SAFE CLEANER SPECIFICALLY DESIGNED FOR HVAC APPLICATIONS. CLEANING SHALL BE PERFORMED USING LOW-PRESSURE APPLICATION METHODS TO AVOID FIN DAMAGE, FOLLOWED BY THOROUGH RINSING AS REQUIRED, ENSURING NO RESIDUAL CLEANING AGENTS REMAIN THAT COULD IMPACT SYSTEM PERFORMANCE.

ALL CONDENSATE DRAIN PANS SHALL BE FULLY CLEANED AND DISINFECTED USING A TREASURY-APPROVED BIOCIDE, ENSURING REMOVAL OF ALL VISIBLE CONTAMINATION, BIOFILM, AND DEBRIS. DRAIN LINES SHALL BE INSPECTED AND FLUSHED TO CONFIRM PROPER FLOW AND PREVENT FUTURE ACCUMULATION.

FAN HOUSINGS, INCLUDING BLOWER ASSEMBLIES AND ACCESSIBLE INTERNAL COMPONENTS, SHALL BE HEPA VACUUMED AND WET-CLEANED USING A TREASURY-APPROVED BIOCIDE TO REMOVE MICROBIAL CONTAMINATION AND ACCUMULATED PARTICULATES. CARE SHALL BE TAKEN TO PROTECT MOTORS, BEARINGS, AND ELECTRICAL COMPONENTS FROM MOISTURE INTRUSION.

ALL AIR FILTERS WITHIN THE CRAC UNITS SHALL BE REMOVED AND REPLACED WITH GOVERNMENT-PROVIDED FILTERS. THE CONTRACTOR SHALL ENSURE PROPER INSTALLATION, SEALING, AND COMPATIBILITY WITH THE SYSTEM TO MAINTAIN DESIGN AIRFLOW AND FILTRATION EFFICIENCY.

ANY INTERNAL POROUS INSULATION WITHIN THE CRAC UNITS THAT EXHIBITS CONTAMINATION SHALL BE CAREFULLY REMOVED, BAGGED, AND DISPOSED OF IN ACCORDANCE WITH THIS SOW. REPLACEMENT INSULATION SHALL BE INSTALLED USING MATERIALS THAT MEET OR EXCEED THE ORIGINAL SPECIFICATIONS AND ARE SUITABLE FOR HVAC APPLICATIONS, ENSURING PROPER FIT, ADHESION, AND RESISTANCE TO FUTURE MICROBIAL GROWTH.

UPON COMPLETION, THE CONTRACTOR SHALL ENSURE ALL COMPONENTS ARE CLEAN, DRY, AND FREE OF RESIDUAL CONTAMINANTS PRIOR TO REASSEMBLY AND RETURN TO SERVICE. THE GOVERNMENT SHALL TEST THE CRAC UNIT UPON COMPLETION OF REMEDIATION TO ENSURE FUNCTIONALITY OF THE UNIT.

8. FURNITURE AND PANEL CLEANING (MT 1506 AREA)

THE CONTRACTOR SHALL REMOVE, CLEAN, AND REINSTALL ALL AFFECTED PANELS AND FURNITURE WITHIN THE MT 1506 AREA. CLEANING SHALL BE PERFORMED IN ACCORDANCE WITH THE FOLLOWING PROCESS:

1. HEPA VACUUMING TO REMOVE LOOSE PARTICULATE AND SPORES.
2. CONTROLLED APPLICATION OF A TREASURY-APPROVED BIOCIDE TO DAMPEN, BUT NOT SATURATE, SURFACES.
3. GENTLE AGITATION USING SOFT BRUSHES TO DISLODGE CONTAMINATION.
4. EXTRACTION USING HOT WATER EXTRACTION EQUIPMENT TO REMOVE CONTAMINANTS AND CLEANING AGENTS.
5. DRYING USING AIR MOVERS AND DEHUMIDIFICATION TO ACHIEVE COMPLETE DRYING WITHIN 24-48 HOURS.

THE CONTRACTOR SHALL ENSURE THAT NO OVER-SATURATION OCCURS AND THAT ALL MATERIALS ARE FULLY DRY PRIOR TO REINSTALLATION.

9. CARPET REMOVAL AND REPLACEMENT

THE CONTRACTOR SHALL REMOVE AND DISPOSE OF ALL CARPETING WITHIN THE MT 1506 AREA, EXCLUDING ENCLOSED OFFICE SPACES, EXTENDING UP TO FIFTY (50) LINEAR FEET FROM THE AFFECTED CRAC UNIT. PRIOR TO INSTALLATION OF GOVERNMENT-FURNISHED CARPET, THE CONTRACTOR SHALL CLEAN, DISINFECT, AND DRY THE RAISED SUBFLOOR AND THE AREAS BELOW THE FLOOR INCLUDING ALL LINES, CABLES, AND CABLE TRAYS. INSTALLATION SHALL UTILIZE MOLD-RESISTANT ADHESIVES AND SHALL COMPLY WITH MANUFACTURER RECOMMENDATIONS.

10. WALL SURFACE CLEANING AND DISINFECTION

THE CONTRACTOR SHALL CLEAN AND DISINFECT ALL WALL SURFACES WITHIN THE DEFINED REMEDIATION AREAS, INCLUDING BUT NOT LIMITED TO THE MT 1506 AREA, CRAC ROOMS, UNDERFLOOR ACCESS POINTS, AND ANY ADJACENT IMPACTED SPACES IDENTIFIED BY THE CONTRACTING OFFICER OR INDUSTRIAL HYGIENIST. ALL WALL SURFACES, REGARDLESS OF FINISH TYPE (E.G., PAINTED GYPSUM BOARD, SEALED MASONRY, METAL PANELS), SHALL BE TREATED AS POTENTIALLY CONTAMINATED.

CLEANING SHALL BE PERFORMED USING A TWO-STEP PROCESS CONSISTING OF HEPA VACUUMING FOLLOWED BY THE APPLICATION OF A TREASURY-APPROVED BIOCIDE, SUCH AS VITALOXIDE OR CONCROBIUM. THE BIOCIDE SHALL BE APPLIED IN ACCORDANCE WITH THE MANUFACTURER'S SPECIFICATIONS, ENSURING FULL SURFACE COVERAGE AND APPROPRIATE DWELL TIME. SURFACES SHALL BE WIPED USING CLEAN, LINT-FREE CLOTHS OR MICROFIBER MATERIALS TO PHYSICALLY REMOVE CONTAMINANTS. CLOTHS SHALL BE CHANGED FREQUENTLY TO PREVENT CROSS-CONTAMINATION.

THE CONTRACTOR SHALL ENSURE THAT WALL SURFACES ARE DAMPENED BUT NOT OVERSATURATED TO PREVENT DAMAGE TO FINISHES OR SUBSTRATE MATERIALS. ANY VISIBLY DETERIORATED OR WATER-DAMAGED WALL MATERIALS IDENTIFIED DURING CLEANING SHALL BE REPORTED IMMEDIATELY TO THE CONTRACTING OFFICER FOR DISPOSITION. ALL CLEANED SURFACES SHALL BE ALLOWED TO DRY COMPLETELY UNDER CONTROLLED ENVIRONMENTAL CONDITIONS PRIOR TO CLEARANCE TESTING.

11. CEILING SYSTEM REPLACEMENT AND HVAC TERMINAL CLEANING

THE CONTRACTOR SHALL REMOVE AND REPLACE ALL EXISTING DROP CEILING TILES WITHIN THE DEFINED REMEDIATION AREAS, INCLUDING THE MT 1506 AREA AND ANY OTHER SPACES IDENTIFIED AS IMPACTED. REMOVAL SHALL BE PERFORMED UNDER CONTAINMENT CONDITIONS TO PREVENT THE RELEASE OF ACCUMULATED DUST AND MICROBIAL CONTAMINANTS. ALL CEILING TILES SHALL BE CONSIDERED POROUS MATERIALS AND SHALL BE DISPOSED OF IN ACCORDANCE WITH THIS SOW

PRIOR TO INSTALLATION OF NEW CEILING PANELS, THE CONTRACTOR SHALL CLEAN AND DISINFECT ALL CEILING GRID SYSTEMS, HANGERS, AND STRUCTURAL COMPONENTS USING HEPA VACUUMING FOLLOWED BY APPLICATION OF A TREASURY-APPROVED BIOCIDE. THE PLENUM SPACE ABOVE THE CEILING SHALL ALSO BE VISUALLY INSPECTED AND CLEANED.

NEW CEILING TILES SHALL BE GOVERNMENT-FURNISHED OR CONTRACTOR-PROVIDED AS DIRECTED AND SHALL MEET OR EXCEED THE EXISTING SPECIFICATION, INCLUDING FIRE RATING AND ACOUSTIC PROPERTIES. TILES SHALL BE INSTALLED ONLY AFTER THE AREA HAS PASSED CLEARANCE OR WITH WRITTEN APPROVAL FROM THE CONTRACTING OFFICER.

ALL NON-POROUS RETURN AIR GRILLES, SUPPLY VENTS, AND DIFFUSERS WITHIN THE AFFECTED AREAS SHALL BE REMOVED, HEPA VACUUMED, AND DISINFECTED USING A TREASURY-APPROVED BIOCIDE. COMPONENTS SHALL BE THOROUGHLY DRIED PRIOR TO REINSTALLATION. ANY COMPONENTS EXHIBITING CORROSION, DAMAGE, OR PERSISTENT CONTAMINATION SHALL BE REPORTED FOR REPLACEMENT.

THE CONTRACTOR SHALL REMOVE AND REPLACE ALL EXISTING LIGHT FIXTURES WITHIN THE AFFECTED CEILING AREAS. REMOVAL SHALL BE COORDINATED WITH ELECTRICAL LOCKOUT/TAGOUT PROCEDURES. NEW FIXTURES SHALL BE INSTALLED IN ACCORDANCE WITH APPLICABLE ELECTRICAL CODES AND SHALL MATCH OR IMPROVE UPON EXISTING PERFORMANCE SPECIFICATIONS, INCLUDING ENERGY EFFICIENCY AND ILLUMINATION LEVELS. ALL FIXTURES SHALL BE CLEANED PRIOR TO ENERGIZATION, AND INSTALLATION SHALL BE COORDINATED TO MAINTAIN THE INTEGRITY OF THE CEILING SYSTEM AND PREVENT CONTAMINATION OF NEWLY REMEDIATED AREAS.

12. MOISTURE CONTROL AND ENVIRONMENTAL CONDITIONS

THE SOURCE OF MOISTURE CONTRIBUTING TO THE IDENTIFIED MICROBIAL GROWTH HAS BEEN DETERMINED TO BE AN OVERFLOWING CONDENSATE PUMP EVENT THAT OCCURRED IN JUNE 2025. THE AFFECTED CONDENSATE PUMP HAS SINCE BEEN REPLACED AND IS CONSIDERED CORRECTED.

THE CONTRACTOR SHALL VERIFY AND DOCUMENT THAT NO ACTIVE MOISTURE SOURCES REMAIN PRIOR TO AND THROUGHOUT REMEDIATION ACTIVITIES. THIS SHALL INCLUDE CONFIRMATION THAT THE REPLACED CONDENSATE SYSTEM IS FUNCTIONING PROPERLY AND THAT NO ADDITIONAL LEAKS, CONDENSATE ISSUES, OR HUMIDITY-RELATED CONDITIONS ARE PRESENT WITHIN THE AFFECTED AREAS.

THE CONTRACTOR SHALL MAINTAIN ENVIRONMENTAL CONDITIONS WITHIN THE WORK AREA TO PREVENT REINTRODUCTION OF MOISTURE, INCLUDING MAINTAINING RELATIVE HUMIDITY BELOW FIFTY PERCENT (50%) DURING REMEDIATION AND DRYING OPERATIONS. MOISTURE LEVELS OF SURFACES AND MATERIALS SHALL BE VERIFIED USING CALIBRATED INSTRUMENTS PRIOR TO REINSTALLATION OF ANY MATERIALS OR SYSTEM COMPONENTS.

ANY EVIDENCE OF NEW OR ONGOING MOISTURE INTRUSION DISCOVERED DURING THE COURSE OF WORK SHALL BE IMMEDIATELY REPORTED TO THE CONTRACTING OFFICER, AND AFFECTED WORK ACTIVITIES SHALL BE PAUSED IN THE IMPACTED AREA UNTIL RESOLUTION IS PROVIDED EITHER THROUGH THIS CONTRACT VEHICLE OR BY THE IN-HOUSE MAINTENANCE STAFF, AS DIRECTED BY THE HEAD OF THE ENGINEERING DIVISION.

13. PROTECTION OF INFRASTRUCTURE

THE CONTRACTOR SHALL IMPLEMENT PROTECTIVE MEASURES FOR ALL SENSITIVE INFRASTRUCTURE, INCLUDING CABLE TRAYS, ELECTRICAL SYSTEMS, FIRE ALARM SYSTEMS, AND BUILDING AUTOMATION SYSTEMS. WORK WITHIN TELECOMMUNICATIONS OR DATA ENVIRONMENTS SHALL INCORPORATE ELECTROSTATIC DISCHARGE (ESD) PRECAUTIONS. NO DAMAGE OR CONTAMINATION TO OPERATIONAL SYSTEMS SHALL BE PERMITTED.

14. WORK SEQUENCING AND COORDINATION

THE CONTRACTOR SHALL DEVELOP AND SUBMIT A DETAILED WORK PLAN OUTLINING SEQUENCING, PHASING, AND COORDINATION WITH BUILDING OPERATIONS. THE PLAN SHALL INCLUDE EQUIPMENT STAGING, CONTAINMENT SETUP, ACCESS CONTROL PROCEDURES, TEMPORARY COOLING STRATEGIES, AND RESTORATION SEQUENCING, AND SHALL BE COORDINATED IN ADVANCE WITH THE CONTRACTING OFFICER AND DESIGNATED GOVERNMENT REPRESENTATIVES.

ALL WORK UNDER THIS SOW SHALL BE PERFORMED DURING THE NORMAL TREASURY DUTY DAY, DEFINED AS 0700 HOURS TO 1700 HOURS, AND IS CONTINGENT UPON THE AVAILABILITY OF A GOVERNMENT-PROVIDED ESCORT WITH THE APPROPRIATE SECURITY CLEARANCE FOR ACCESS TO THE AFFECTED SPACES. THE CONTRACTOR SHALL COORDINATE DAILY ACCESS REQUIREMENTS IN ADVANCE AND SHALL NOT PERFORM WORK IN SECURE AREAS WITHOUT THE PRESENCE OF THE ASSIGNED ESCORT. THE CONTRACTOR SHALL COMPLY FULLY WITH ALL DIRECTIONS PROVIDED BY THE GOVERNMENT ESCORT WHILE WITHIN SECURE SPACES.

THE CONTRACTOR IS ADVISED THAT THE AFFECTED AREA IS CURRENTLY SHUT DOWN, WITH THE EXCEPTION OF THE LAN ROOM, WHICH MUST REMAIN FULLY OPERATIONAL AND CONTINUOUSLY COOLED TO SUPPORT MISSION-CRITICAL SYSTEMS. COOLING TO THE LAN ROOM IS PRESENTLY PROVIDED BY AN EXISTING CRAC UNIT. THE CONTRACTOR SHALL DEVELOP AND IMPLEMENT A DETAILED PLAN TO MAINTAIN UNINTERRUPTED COOLING TO THE LAN ROOM THROUGHOUT ALL PHASES OF WORK. THE CONTRACTOR SHALL ENSURE THAT ENVIRONMENTAL CONDITIONS WITHIN THE LAN ROOM IS MAINTAINED WITHIN A TEMPERATURE RANGE OF 60°F TO 70°F AND A RELATIVE HUMIDITY RANGE OF 40% TO 55% AT ALL TIMES. THE CONTRACTOR'S COOLING PLAN SHALL INCLUDE REDUNDANCY AT A MINIMUM N+1 LEVEL, ENSURING THAT THE FAILURE OR REMOVAL OF ANY SINGLE COOLING COMPONENT DOES NOT RESULT IN LOSS OF ENVIRONMENTAL CONTROL. THIS MAY INCLUDE TEMPORARY COOLING SYSTEMS, PHASED ISOLATION OF EXISTING EQUIPMENT, OR OTHER ENGINEERED SOLUTIONS AS APPROVED BY THE CONTRACTING OFFICER. AT NO TIME SHALL COOLING TO THE LAN ROOM BE INTERRUPTED OR ALLOWED TO FALL OUTSIDE THE SPECIFIED ENVIRONMENTAL PARAMETERS WITHOUT PRIOR WRITTEN APPROVAL. THE CONTRACTOR SHALL CONTINUOUSLY MONITOR AND DOCUMENT TEMPERATURE AND HUMIDITY CONDITIONS AND SHALL IMMEDIATELY TAKE CORRECTIVE ACTION IN THE EVENT OF ANY DEVIATION TO PREVENT IMPACT TO MISSION-CRITICAL OPERATIONS.

AT NO TIME SHALL COOLING TO THE LAN ROOM BE INTERRUPTED WITHOUT PRIOR WRITTEN APPROVAL. THE CONTRACTOR SHALL COORDINATE ALL WORK ACTIVITIES AFFECTING THE CRAC SYSTEMS TO ENSURE CONTINUOUS OPERATION OF MISSION-CRITICAL INFRASTRUCTURE AND PREVENT ANY ADVERSE IMPACT ON NETWORK OPERATIONS. WORK SHALL BE EXECUTED IN A MANNER THAT MINIMIZES DISRUPTION TO MISSION-CRITICAL FUNCTIONS WHILE ADHERING TO ALL SECURITY PROTOCOLS, ESCORT REQUIREMENTS, AND OPERATIONAL CONSTRAINTS.

THE CONTRACTOR SHALL IDENTIFY AND DESIGNATE ALL EQUIPMENT STAGING AND LAYDOWN AREAS AS PART OF THE SUBMITTED WORK PLAN. THIS SHALL INCLUDE, AT A MINIMUM, A DESIGNATED EQUIPMENT STAGING AREA AND A SEPARATE, SECURED WASTE STAGING AREA FOR TEMPORARY STORAGE OF CONTAMINATED MATERIALS PRIOR TO REMOVAL FROM THE SITE. ALL STAGING AND LAYDOWN AREAS SHALL BE SELECTED AND MANAGED IN ACCORDANCE WITH APPLICABLE CODES, STANDARDS, AND INDUSTRY BEST PRACTICES, AND SHALL BE COORDINATED WITH AND APPROVED BY THE CONTRACTING OFFICER AND DESIGNATED GOVERNMENT REPRESENTATIVES.

STAGING AREAS SHALL BE LOCATED TO PREVENT INTERFERENCE WITH BUILDING OPERATIONS, MAINTAIN REQUIRED EGRESS PATHS, AND PROTECT SENSITIVE INFRASTRUCTURE. WASTE STAGING AREAS SHALL BE CLEARLY DELINEATED, CONTROLLED, AND SECURED TO PREVENT UNAUTHORIZED ACCESS AND CROSS-CONTAMINATION. THE CONTRACTOR SHALL IMPLEMENT APPROPRIATE CONTAINMENT, LABELING, AND HANDLING PROCEDURES WITHIN THESE AREAS CONSISTENT WITH THE CONTAMINATION CONTROL REQUIREMENTS OF THIS SOW.

MERIDIEN GROUP

MERIDIEN GROUP, LLC
208 SOUTH KING ST. SUITE 303
LEESBURG, VA 20175
(703) 777-8285
www.meridiengrouplic.com

DCA CITADEL
ARCHITECTURE | HISTORIC PRESERVATION | PLANNING | DESIGN

CERTIFICATIONS

KEY PLAN

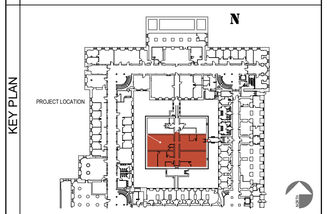

REVISION NOTES

MARK	DATE	DESCRIPTION

GRAPHIC SCALE

CAUTION: IF THIS DRAWING IS A REDUCTION THIS GRAPHIC SCALE MUST BE USED

CONTRACTORS	
A/E CON. NO.	
A/E TASK NO.	
CONS. CONTR	
CONS. WORK	
PRIME A/E	MERIDIEN GROUP / CITADEL DCA
SUB A/E	
BUILDING	
NAME	
STREET	
CITY/ST./ZIP	WASHINGTON, DC
BUILDING NO.	DC-
OTHER	
BUILDING NOs.	
FACILITY CODE	
PROJECT	
PROJECT TITLE	FEDERAL OFFICE BUILDING MT 1125 OFFICE RENOVATION
PROJECT DESCRIPTION	RENOVATION OF FIRST FLOOR SUITE AND UPGRADE SECURITY
PROJECT NO.	MT1125_26_005
GSA PM	BARBARA CHOATE
SUBMISSION	100% SUBMISSION REV-3
SUB. DATE	15 JUNE 2026
DRAWING	
DRAWING TITLE	MOLD REMEDIATION
FILE NAME	
FLOOR NO.	1ST FLOOR
DRAWN BY	AGF DATE DRAFTED: 04/24/2026
CHECKED BY	LSP SHEET SIZE: 24 x 36
DRAWING NO.	G- 004
	DISCIPLINE SHEET TYPE SEQUENCE
	SHEET 04 OF 28

15. HEALTH AND SAFETY REQUIREMENTS

THE CONTRACTOR SHALL PERFORM DETAILED CLEANING AND REMEDIATION OF ALL AFFECTED CRAC UNITS TO ENSURE COMPLETE REMOVAL OF MICROBIAL CONTAMINATION AND RESTORATION OF OPERATIONAL INTEGRITY. ALL WORK SHALL BE PERFORMED UNDER CONTAINMENT CONDITIONS AND IN ACCORDANCE WITH MANUFACTURER RECOMMENDATIONS TO PREVENT DAMAGE TO EQUIPMENT, AND IN FULL COMPLIANCE WITH A SITE-SPECIFIC HEALTH AND SAFETY PLAN (HASP) DEVELOPED, SUBMITTED, AND IMPLEMENTED BY THE CONTRACTOR IN ACCORDANCE WITH ALL APPLICABLE OSHA STANDARDS, INCLUDING BUT NOT LIMITED TO 29 CFR 1910.134 (RESPIRATORY PROTECTION) AND 29 CFR 1910.1200 (HAZARD COMMUNICATION). THE HASP SHALL ADDRESS HAZARD IDENTIFICATION, EXPOSURE CONTROLS, ENGINEERING CONTROLS, ADMINISTRATIVE CONTROLS, AND EMERGENCY PROCEDURES SPECIFIC TO MOLD REMEDIATION WITHIN A SECURE, MISSION-CRITICAL FACILITY.

ALL PERSONNEL SHALL UTILIZE APPROPRIATE PERSONAL PROTECTIVE EQUIPMENT (PPE) COMMENSURATE WITH THE LEVEL OF CONTAMINATION, INCLUDING AT A MINIMUM P100 RESPIRATORS, DISPOSABLE PROTECTIVE SUITS, GLOVES, AND EYE PROTECTION. THE CONTRACTOR SHALL ENSURE PROPER FIT TESTING, TRAINING, AND MEDICAL CLEARANCE FOR RESPIRATOR USE IN ACCORDANCE WITH OSHA REQUIREMENTS. THE CONTRACTOR SHALL IMPLEMENT STRICT CONTAMINATION AND CROSS-CONTAMINATION CONTROL MEASURES THROUGHOUT THE DURATION OF THE WORK, INCLUDING THE ESTABLISHMENT AND MAINTENANCE OF CLEARLY DEFINED WORK ZONES CONSISTING OF CONTAMINATED AREAS, CONTROLLED TRANSITION/DECONTAMINATION ZONES, AND CLEAN AREAS. ACCESS BETWEEN ZONES SHALL BE CONTROLLED, AND APPROPRIATE DECONTAMINATION PROCEDURES SHALL BE ENFORCED FOR PERSONNEL, EQUIPMENT, AND MATERIALS EXITING CONTAMINATED AREAS.

THE CONTRACTOR SHALL CLEAN ALL COOLING COILS USING A NON-ACIDIC, COIL-SAFE CLEANER SPECIFICALLY DESIGNED FOR HVAC APPLICATIONS. CLEANING SHALL BE PERFORMED USING LOW-PRESSURE APPLICATION METHODS TO AVOID FIN DAMAGE, FOLLOWED BY THOROUGH RINSING AS REQUIRED, ENSURING NO RESIDUAL CLEANING AGENTS REMAIN THAT COULD IMPACT SYSTEM PERFORMANCE. ALL CONDENSATE DRAIN PANS SHALL BE FULLY CLEANED AND DISINFECTED USING A TREASURY-APPROVED BIOCIDE, ENSURING REMOVAL OF ALL VISIBLE CONTAMINATION, BIOFILM, AND DEBRIS, AND DRAIN LINES SHALL BE INSPECTED AND FLUSHED TO CONFIRM PROPER FLOW AND PREVENT FUTURE ACCUMULATION. FAN HOUSINGS, INCLUDING BLOWER ASSEMBLIES AND ACCESSIBLE INTERNAL COMPONENTS, SHALL BE HEPA VACUUMED AND WET-CLEANED USING A TREASURY-APPROVED BIOCIDE TO REMOVE MICROBIAL CONTAMINATION AND ACCUMULATED PARTICULATES, WITH CARE TAKEN TO PROTECT MOTORS, BEARINGS, AND ELECTRICAL COMPONENTS FROM MOISTURE INTRUSION.

ALL AIR FILTERS WITHIN THE CRAC UNITS SHALL BE REMOVED AND REPLACED WITH GOVERNMENT-PROVIDED FILTERS, ENSURING PROPER INSTALLATION, SEALING, AND COMPATIBILITY WITH SYSTEM DESIGN AIRFLOW AND FILTRATION REQUIREMENTS. ANY INTERNAL POROUS INSULATION WITHIN THE CRAC UNITS THAT EXHIBITS CONTAMINATION SHALL BE CAREFULLY REMOVED, BAGGED, AND DISPOSED OF IN ACCORDANCE WITH THIS SOW. REPLACEMENT INSULATION SHALL MEET OR EXCEED ORIGINAL SPECIFICATIONS AND BE SUITABLE FOR HVAC APPLICATIONS, ENSURING PROPER FIT, ADHESION, AND RESISTANCE TO FUTURE MICROBIAL GROWTH.

THE CONTRACTOR SHALL MAINTAIN DAILY LOGS DOCUMENTING CONTAMINATED WASTE GENERATION, INCLUDING QUANTITIES AND TYPES OF MATERIALS REMOVED, AS WELL AS HANDLING, PACKAGING, AND DISPOSAL ACTIONS. CONTINUOUS MONITORING LOGS AND DAILY VERIFICATION RECORDS SHALL BE MAINTAINED BY BOTH THE CONTRACTOR AND THE THIRD-PARTY CERTIFIED INDUSTRIAL HYGIENIST (CIH). DAILY LOGS SHALL DOCUMENT CONTAMINATION CONTROL MEASURES, INCLUDING CONTAINMENT INTEGRITY, NEGATIVE AIR PRESSURE VERIFICATION, CLEANING ACTIVITIES, ESTABLISHMENT AND MAINTENANCE OF CLEAN AREAS, AND ANY OBSERVED OR MITIGATED CROSS-CONTAMINATION RISKS.

ALL SAFETY, CONTAMINATION CONTROL, AND WASTE HANDLING ACTIVITIES SHALL BE PERFORMED IN A MANNER THAT PROTECTS WORKERS, BUILDING OCCUPANTS, AND SENSITIVE INFRASTRUCTURE, AND SHALL BE FULLY DOCUMENTED AND MADE AVAILABLE FOR GOVERNMENT REVIEW UPON REQUEST. UPON COMPLETION, THE CONTRACTOR SHALL ENSURE ALL CRAC COMPONENTS ARE CLEAN, DRY, AND FREE OF RESIDUAL CONTAMINANTS PRIOR TO REASSEMBLY AND RETURN TO SERVICE.

16. DOCUMENTATION AND REPORTING

THE CONTRACTOR SHALL MAINTAIN COMPREHENSIVE DOCUMENTATION THROUGHOUT THE PROJECT, INCLUDING DAILY LOGS, MATERIAL REMOVAL QUANTITIES, DISPOSAL MANIFESTS, AND BIOCIDE APPLICATION RECORDS. DUE TO SECURITY RESTRICTIONS WITHIN SPACE MT 1506, PHOTOGRAPHIC DOCUMENTATION BY THE CONTRACTOR IS STRICTLY PROHIBITED.

IN LIEU OF PHOTOGRAPHS, THE CONTRACTOR SHALL PROVIDE DETAILED WRITTEN RECORDS DESCRIBING PRE-REMEDIATION CONDITIONS, WORK PERFORMED, AND POST-REMEDIATION STATUS. DOCUMENTATION SHALL INCLUDE ANNOTATED SKETCHES, DIAGRAMS, OR REDLINED FLOOR PLANS THAT IDENTIFY WORK LOCATIONS, THE EXTENT OF CONTAMINATION, AND AREAS OF MATERIAL REMOVAL AND REPLACEMENT. ALL RECORDS SHALL BE SUFFICIENTLY DETAILED TO SUPPORT VERIFICATION OF WORK COMPLETION AND COMPLIANCE WITH THIS SOW.

THE GOVERNMENT MAY, AT ITS DISCRETION, PROVIDE PRE- AND POST-REMEDIATION PHOTOGRAPHIC DOCUMENTATION FOR RECORDKEEPING AND VERIFICATION PURPOSES, IN ACCORDANCE WITH APPLICABLE SECURITY PROTOCOLS.

A FINAL REPORT SHALL BE SUBMITTED SUMMARIZING ALL ACTIVITIES, FINDINGS, AND CLEARANCE RESULTS, INCLUDING THIRD-PARTY INDUSTRIAL HYGIENIST REPORTS, DISPOSAL DOCUMENTATION, AND ALL SUPPORTING LOGS.

17. STANDARDS AND REFERENCES

ALL WORK SHALL COMPLY WITH THE LATEST VERSIONS OF THE FOLLOWING:

- EPA MOLD REMEDIATION IN SCHOOLS AND COMMERCIAL BUILDINGS
- IICRC S520 STANDARD FOR PROFESSIONAL MOLD REMEDIATION
- ACGIH GUIDELINES FOR BIOAEROSOLS
- OSHA APPLICABLE STANDARDS

18. SUBMITTALS

- HASP
- WORK PLAN / PHASING PLAN
- CONTAINMENT DESIGN
- TEMPORARY COOLING PLAN (LAN ROOM CRITICAL)
- PRODUCT DATA (BIOCIDES, COATINGS)
- EQUIPMENT LIST (HEPA UNITS, DEHUMIDIFIERS)

MERIDIEN GROUP

MERIDIEN GROUP, LLC
208 SOUTH KING ST. SUITE 303
LEESBURG, VA 20175
(703) 777-8285
www.meridiengroupllc.com

DCA CITADEL
ARCHITECTURE | HISTORIC PRESERVATION | PLANNING | DESIGN

CERTIFICATIONS

KEY PLAN

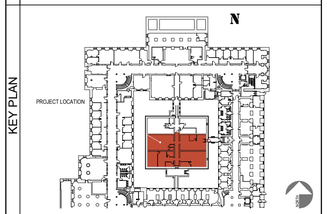

REVISION NOTES

MARK	DATE	DESCRIPTION

GRAPHIC SCALE

CAUTION: IF THIS DRAWING IS A REDUCTION THIS GRAPHIC SCALE MUST BE USED

CONTRACTORS	
A/E CON. NO.	
A/E TASK NO.	
CONS. CONTR	
CONS. WORK	
PRIME A/E	MERIDIEN GROUP / CITADEL DCA
SUB A/E	
BUILDING	
NAME	
STREET	
CITY/ST./ZIP	WASHINGTON, DC
BUILDING NO.	DC-
OTHER BUILDING NOs.	
FACILITY CODE	
PROJECT	
PROJECT TITLE	FEDERAL OFFICE BUILDING MT 1125 OFFICE RENOVATION
PROJECT DESCRIPTION	RENOVATION OF FIRST FLOOR SUITE AND UPGRADE SECURITY
PROJECT NO.	MT1125_26_005
GSA PM	BARBARA CHOATE
SUBMISSION	100% SUBMISSION REV-3
SUB. DATE	15 JUNE 2026
DRAWING	
DRAWING TITLE	MOLD REMEDIATION
FILE NAME	
FLOOR NO.	1ST FLOOR
DRAWN BY	AGF DATE DRAFTED: 04/24/2026
CHECKED BY	LSP SHEET SIZE: 24 x 36
DRAWING NO.	G- 005
	DISCIPLINE SHEET TYPE SEQUENCE
	SHEET 05 OF 28

OPTION 1 | BASE WORK: NEW FINISHES + NEW ENTRY END EXIT STC-50 / RF SHIELDING READY DOORS

GENERAL NOTES

1. CONTRACTOR TO VERIFY EXISTING CONDITIONS BEFORE THE START OF WORK. NO FORENSIC DEMOLITION WAS CONDUCTED AT THE TIME OF THE SURVEY. DISCREPANCIES MIGHT BE ENCOUNTERED BETWEEN ACTUAL CONDITIONS AND DRAWINGS. INFORM COR PRIOR TO PROCEEDING WITH WORK
2. IN CASE OF CONFLICTS BETWEEN PLANS, KEY NOTES, SECTIONS, DETAILS & SPECIFICATIONS, THE MOST STRINGENT REQUIREMENT APPLIES
3. ALL DIMENSIONS ARE GIVEN FROM FINISH WALL OR PARTITION TO FINISH WALL OR PARTITION
4. ALL WORK PROVIDED UNDER THIS CONTRACT SHALL BE NEW UNLESS SPECIFICALLY MARKED "EXISTING", "EXTG", OR "(E)"
5. BEST PRACTICES, METHODS AND MATERIALS, MUST BE FOLLOWED AT ALL TIMES. ANY ITEM NOT SPECIFICALLY LISTED OR SHOWN ON THE CONTRACT DOCUMENTS BUT NECESSARY FOR THE COMPLETION OF THE PROJECT, SHALL BE CONSIDERED PART OF THE CONTRACT'S SCOPE OF WORK
6. THE CONTRACTOR SHALL CLEAN UP ALL ACTIVE WORK AREAS AFTER EACH DAY'S WORK. THE G.C. IS RESPONSIBLE FOR THE REMOVAL AND PROPER DISPOSAL OF ALL WORK RELATED TRASH AND DEBRIS
7. PROTECT ALL GOVERNMENT PROPERTY ENCOUNTERED AT THE JOB SITE AGAINST DAMAGE. ALL DAMAGES CAUSED BY THE CONTRACTOR SHALL BE REPAIRED OR REPLACED TO MATCH EXISTING AND TO THE SATISFACTION AND APPROVAL OF THE COR
8. PROTECT ALL HISTORIC FABRIC DURING DEMOLITION AND CONSTRUCTION.
9. AREA OF WORK MUST BE ISOLATED FROM THE REST OF ADJACENT AREAS. PROTECT ALL SURFACES, EQUIPMENT& FURNITURE PRIOR TO START OF WORK.
10. REMOVE ALL HVAC COVERS AS NEEDED. SEAL EXPOSED DUCTS AND VENTS TO PREVENT INTRODUCING DUST INTO THE SYSTEM. (REMOVED COVERS MUST BE REINSTALLED AT END OF THE JOB)
11. DO NOT REMOVE HISTORIC FABRIC UNLESS SPECIFICALLY NOTED ON DOCUMENTS. ANY HISTORIC FABRIC REMOVED MUST BE RETURNED TO COR. DO NOT DISPOSE
12. TREASURY WILL REMOVE ALL EXISTING FURNITURE AND REINSTALL IT AT THE END OF THE WORK.

DEMOLITION NOTES

(1) TREASURY WILL REMOVE SYSTEMS FURNITURE AND SYSTEMS PARTITIONS FROM PROJECT AREA. FURNITURE WILL REINSTALL IT AFTER JOB IS COMPLETED

(2) REMOVE DOOR ASSEMBLY AS DEPICTED (LEAF AND FRAME). MODIFY THE SIZE OF THE OPENING TO MATCH THE INDICATED NEW R.O.,TO ENSURE THAT IT ALLOWS FOR THE INSTALLATION OF THE NEW STC-50 DOORS.

(3) REMOVE ALL EXISTING CARPET. REMOVE CARPET GLUE AND CLEAN FLOOR PANELS AS NEEDED TO PREPARE THE PANELS FOR NEW CARPET INSTALLATION

(4) REMOVE AND DISPOSE OF ALL BASE BOARD

(5) REMOVE AND DISPOSE OF ALL CEILING TILES AND GRID.

(6) SECURITY EQUIPMENT AND, IF APPLICABLE, CARD READER MIGHT HAVE TO BE RELOCATED TO RESIZE THE OPENING

(7) ALL LIGHT FIXTURES AND OTHER CEILING MOUNTED EQUIPMENT THAT WILL BE REMOVED TO REPLACE CEILING ACT IS TO BE REINSTALLED. KEEP ALL REMOVED COMPONENTS ON SITE PROTECTED. CLEAN PRIOR TO THEIR REINSTALLATION

(8) REMOVE FLOOR PANELS AS NEEDED WITHIN THE DESIGNATED AREAS TO ASCERTAIN IF WALL EXTENDS TO FLOOR DECK

(9) REMOVE EXISTING DOOR AND FRAME IF CURRENT ASSEMBLY DOES NOT MEET THE STC-50 LEVEL 4 CRITERIA.

KEY & PROTECTION NOTES

1. EXISTING DOOR ASSEMBLY TO REMAIN. PROTECT DURING CONSTRUCTION PRIOR TO PREPARATION FOR REFINISHING
2. MECHANICAL EQUIPMENT AND DUCT WORK TO REMAIN UNALTERED.
3. FIRE PROTECTION & FIRE ALARM SYSTEMS TO REMAIN UNALTERED.
4. POWER AND LIGHTING SYSTEMS TO REMAIN UNALTERED.
5. EXISTING CEILING PAINTED BLACK W/O ACT AND GRID, CABLE TRAYS, LIGHT FIXTURES AND ALL OTHER COMPONENTS OF THE FIRE SUPPRESSION, FIRE ALARM, EMERGENCY EGRESS, AND HVAC TO REMAIN UNALTERED. PROTECT DURING CONSTRUCTION, SPECIALLY WHEN / IF NEW PAINT IS APPLIED.

A-1 EXISTING AND DEMOLITION FLOOR PLAN
1/4" = 1'-0"

LEGEND

- EXISTING WALLS TO REMAIN
- EXISTING WALLS TO BE REMOVED
- EXISTING DOORS WITHIN THE AREA OF WORK TO REMAIN
- EXISTING DOORS WITHIN THE AREA OF WORK TO BE REMOVED
- EXISTING DOORS OUTSIDE THE AREA OF WORK TO REMAIN
- NOT IN THE SCOPE OF WORK

MERIDIEN GROUP

MERIDIEN GROUP, LLC
208 SOUTH KING ST. SUITE 303
LEESBURG, VA 20175
(703) 777-8285
www.meridiengroupllc.com

CITADEL
ARCHITECTURE | HISTORIC PRESERVATION | PLANNING | DESIGN

CERTIFICATIONS

KEY PLAN

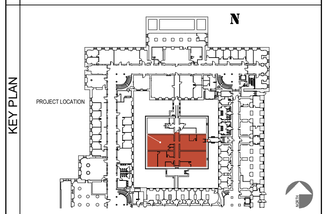

REVISION NOTES

MARK	DATE	DESCRIPTION

GRAPHIC SCALE

1/4" =1'-0"

CAUTION: IF THIS DRAWING IS A REDUCTION THIS GRAPHIC SCALE MUST BE USED

CONTRACTORS	A/E CON. NO.	
	A/E TASK NO.	
	CONS. CONTR	
	CONS. WORK	
	PRIME A/E	MERIDIEN GROUP / CITADEL DCA
	SUB A/E	
BUILDING	NAME	
	STREET	
	CITY/ST./ZIP	WASHINGTON, DC
	BUILDING NO.	DC-
	OTHER	
	BUILDING NOs.	
	FACILITY CODE	
PROJECT	PROJECT TITLE	FEDERAL OFFICE BUILDING MT 1125 OFFICE RENOVATION
	PROJECT DESCRIPTION	RENOVATION OF FIRST FLOOR SUITE AND UPGRADE SECURITY
	PROJECT NO.	MT1125_26_005
	GSA PM	BARBARA CHOATE
	SUBMISSION	100% SUBMISSION REV-3
	SUB. DATE	15 JUNE 2026
DRAWING	DRAWING TITLE	OPTION 1 | EXISTING AND DEMOLITION
	FILE NAME	
	FLOOR NO.	1ST FLOOR
	DRAWN BY	AGF DATE DRAFTED: 04/24/2026
	CHECKED BY	LSP SHEET SIZE: 24 x 36
	DRAWING NO.	AD101
		DISCIPLINE SHEET TYPE SEQUENCE
		SHEET 06 OF 28

OPTION 1 | BASE WORK: NEW FINISHES + NEW ENTRY END EXIT STC-50 / RF SHIELDING READY DOORS

GENERAL NOTES

1. CONTRACTOR TO VERIFY EXISTING CONDITIONS BEFORE THE START OF WORK. NO FORENSIC DEMOLITION WAS CONDUCTED AT THE TIME OF THE SURVEY. DISCREPANCIES MIGHT BE ENCOUNTERED BETWEEN ACTUAL CONDITIONS AND DRAWINGS. INFORM COR PRIOR TO PROCEEDING WITH WORK
2. IN CASE OF CONFLICTS BETWEEN PLANS, KEY NOTES, SECTIONS, DETAILS & SPECIFICATIONS, THE MOST STRINGENT REQUIREMENT APPLIES
3. ALL DIMENSIONS ARE GIVEN FROM FINISH WALL OR PARTITION TO FINISH WALL OR PARTITION
4. ALL WORK PROVIDED UNDER THIS CONTRACT SHALL BE NEW UNLESS SPECIFICALLY MARKED "EXISTING", "EXTG", OR "(E)"
5. BEST PRACTICES, METHODS AND MATERIALS, MUST BE FOLLOWED AT ALL TIMES. ANY ITEM NOT SPECIFICALLY LISTED OR SHOWN ON THE CONTRACT DOCUMENTS BUT NECESSARY FOR THE COMPLETION OF THE PROJECT, SHALL BE CONSIDERED PART OF THE CONTRACT'S SCOPE OF WORK
6. THE CONTRACTOR SHALL CLEAN UP ALL ACTIVE WORK AREAS AFTER EACH DAY'S WORK. THE G.C. IS RESPONSIBLE FOR THE REMOVAL AND PROPER DISPOSAL OF ALL WORK RELATED TRASH AND DEBRIS
7. PROTECT ALL GOVERNMENT PROPERTY ENCOUNTERED AT THE JOB SITE AGAINST DAMAGE. ALL DAMAGES CAUSED BY THE CONTRACTOR SHALL BE REPAIRED OR REPLACED TO MATCH EXISTING AND TO THE SATISFACTION AND APPROVAL OF THE COR
8. PROTECT ALL HISTORIC FABRIC DURING DEMOLITION AND CONSTRUCTION.
9. AREA OF WORK MUST BE ISOLATED FROM THE REST OF ADJACENT AREAS. PROTECT ALL SURFACES, EQUIPMENT& FURNITURE PRIOR TO START OF WORK.
10. REMOVE ALL HVAC COVERS AS NEEDED. SEAL EXPOSED DUCTS AND VENTS TO PREVENT INTRODUCING DUST INTO THE SYSTEM. (REMOVED COVERS MUST BE REINSTALLED AT END OF THE JOB)
11. DO NOT REMOVE HISTORIC FABRIC UNLESS SPECIFICALLY NOTED ON DOCUMENTS. ANY HISTORIC FABRIC REMOVED MUST BE RETURNED TO COR. DO NOT DISPOSE
12. TREASURY WILL REMOVE ALL EXISTING FURNITURE AND REINSTALL IT AT THE END OF THE WORK.

KEY NOTES

1. EXISTING OPENING TO BE RESIZED AS DEPICTED IN PLAN, SECTIONS, AND DETAILS (NEW R.O.) TO ALLOW FOR THE INSTALLATION OF A NEW STC-50 / RF SHIELD READY DOOR. NEW 12GA JAMBS AND HEADER TO BE AS FOLLOWS W/ (2) LAYERS OF 5/8" TYPE X EACH SIDE :

   JAMBS: 6" x 3" CLARK DIETRICH 600HDS300-97
   HEADER: 6" x 3" CLARK DIETRICH 600HDS300-97 / BRACKETS 587HDSC300-97

   ALL EXISTING CONDITION DIMENSIONS MUST BE FIELD VERIFIED AFTER DEMOLITION IS COMPLETED.

2. FASTEN NEW FRAMING TO EXISTING FRAMING. ALL EXISTING CONDITION DIMENSIONS MUST BE FIELD VERIFIED AFTER DEMOLITION IS COMPLETED. IF NEW FRAMING MEMBERS ARE NEEDED FOLLOW GUIDELINES IN KEY NOTE 1.
3. NEW 1 3/4" ACOUSTIC STEEL DOOR & STEEL SPLIT FRAME (14 GA MIN) STC-50 SOUND GROUP 4. STC-50 DOOR LEAF MUST BE PURCHASED AS A SET WITH THE DOOR FRAME. THE FRAME MUST HAVE ALL VOIDS IN THE HEAD AND JAMBS PACKED W/ 6 TO 12 LB DENSITY MINERAL WOOL. THE FRAME MUST HAVE A CONTINUOUS CONTACT FLANGE TO INTERFACE WITH RF SHIELDING MATERIAL. SEAL DOOR FRAME WITH RF CONDUCTIVE MASK AND PEEL TAPE (STOP SIDE TRIM) TO MEET TEMPEST. INSTALL DOOR AND HARDWARE AS PER DOOR AND HARDWARE SCHEDULES. HARDWARE MUST MEET FEDERAL SPECIFICATION FF-L-2740 / UL 2050. THE DOOR LEAVES MATCH THE HEIGHT OF THE EXISTING DOORS BUT NOT THE WIDTH. CONSULT DOOR SCHEDULE.
4. INSTALL NEW ACT AND GRID. REINSTALL ALL LIGHT FIXTURES AND OTHER DEVICES AS WHEN THEY WERE PRIOR TO BEING REMOVED DURING THE CEILING RENOVATION. ENSURE THAT ALL EXISTING OR REINSTALLED FIRE SUPPRESSION, FIRE ALARM, LIGHTING, AND ANY OTHER EXISTING OR REINSTALLED CEILING MOUNTED EQUIPMENT IS FULLY FUNCTIONAL.
5. PREPARE ALL WALLS AND OTHER PAINTED ELEMENTS TO RECEIVE A NEW LEVEL 4 PAINT FINISH AS PER FINISHES SCHEDULE
6. ALL FLOOR PANELS ARE TO BE CLEANED AFTER EXISTING CARPET IS DEMOLISHED. TILE GLUE AND OTHER DEBRIS MUST BE FULLY REMOVED PRIOR TO INSTALLING NEW BUILDING SPEC CARPET TILE THROUGHOUT.
7. EXISTING CEILING PAINTED BLACK W/O ACT AND GRID, CABLE TRAYS, LIGHT FIXTURES AND ALL OTHER COMPONENTS OF THE FIRE SUPPRESSION, FIRE ALARM, EMERGENCY EGRESS, AND HVAC TO REMAIN COMPONENTS OF THE FIRE SUPPRESSION, FIRE ALARM, EMERGENCY EGRESS, AND HVAC TO REMAIN UNALTERED. PROTECT DURING CONSTRUCTION, SPECIALLY WHEN THE NEW RF PAINT IS APPLIED.
8. INSTALL NEW WALL BASE AS PER FINISHES SCHEDULE
9. NEW 2 1/4" ACOUSTIC WOOD DOOR & STEEL FRAME (14 GA MIN) STC-50 SOUND GROUP 4. STC-50 DOOR LEAF MUST BE PURCHASED AS A SET WITH THE DOOR FRAME. THE FRAME MUST BE FASTENED TO EXISTING FRAMING, HAVING ALL VOIDS IN THE HEAD AND JAMBS PACKED W/ 6 TO 12 LB DENSITY MINERAL WOOL. INSTALL DOOR AND HARDWARE AS PER DOOR AND HARDWARE SCHEDULES. HARDWARE MUST MEET FEDERAL SPECIFICATION FF-L-2740 / UL 2050. THE DOOR ASSEMBLY IS TO MATCH THE SIZE OF THE EXISTING ASSEMBLY SO THE OPENING DOES NOT NEED TO BE ALTERED.
10. SINCE THE ROOM WILL BE USED AS A CONFERENCE ROOM WITH VTC CAPABILITIES, THE EXISTING WALLS MUST BE EVALUATED AND ALTERED AS NEEDED TO ENSURE THEY MEET THE STC-50 SOUND LEVEL 4 CRITERIA REGARDING:

    CONSTRUCTION: THE WALLS MUST BE FULL HEIGHT, (EXTENDING FROM THE FLOOR DECK TO THE CEILING DECK), AND SUFFICIENT THICKNESS TO COMPLY WITH ICD 705 (NUMBER OF GWB LAYERS, FRAMING MEMBERS SIZE AND GAGE AND INSULATION) WALLS MUST BE UNIFORMLY FINISHED FULL HEIGHT, BOTH SIDES. IF THE BOTTOM OR TOP OF THE WALL DO NOT MEET THE CRITERIA, SEE A-302

    PENETRATIONS: MUST BE IN COMPLIANCE WITH ICD 705

ELECTRICAL/ FIRE ALARM/ SECURITY DEVICES ARE SURFACE MOUNTED

A-1 NEW WORK FLOOR PLAN
1/4" = 1'-0"

LEGEND

- EXISTING WALLS TO REMAIN
- NEW WALLS
- EXISTING DOORS WITHIN THE AREA OF WORK TO REMAIN
- NEW DOOR ASSEMBLY
- NOT IN THE SCOPE OF WORK

MERIDIEN GROUP

MERIDIEN GROUP, LLC
208 SOUTH KING ST. SUITE 303
LEESBURG, VA 20175
(703) 777-8285
www.meridiengroupllc.com

CITADEL
ARCHITECTURE | HISTORIC PRESERVATION | PLANNING | DESIGN

CERTIFICATIONS

KEY PLAN

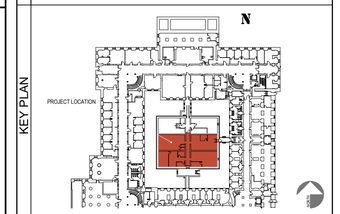

REVISION NOTES

MARK	DATE	DESCRIPTION

GRAPHIC SCALE

1/4" =1'-0"

CAUTION: IF THIS DRAWING IS A REDUCTION THIS GRAPHIC SCALE MUST BE USED

CONTRACTORS	A/E CON. NO.	
	A/E TASK NO.	
	CONS. CONTR	
	CONS. WORK	
	PRIME A/E	MERIDIEN GROUP / CITADEL DCA
	SUB A/E	
BUILDING	NAME	
	STREET	
	CITY/ST./ZIP	WASHINGTON, DC
	BUILDING NO.	DC-
	OTHER	
	BUILDING NOs.	
	FACILITY CODE	
PROJECT	PROJECT TITLE	FEDERAL OFFICE BUILDING MT 1125 OFFICE RENOVATION
	PROJECT DESCRIPTION	RENOVATION OF FIRST FLOOR SUITE AND UPGRADE SECURITY
	PROJECT NO.	MT1125_26_005
	GSA PM	BARBARA CHOATE
	SUBMISSION	100% SUBMISSION REV-3
	SUB. DATE	15 JUNE 2026
DRAWING	DRAWING TITLE	OPTION 1 | BASE NEW WORK
	FILE NAME	
	FLOOR NO.	1ST FLOOR
	DRAWN BY	AGF DATE DRAFTED: 04/24/2026
	CHECKED BY	LSP SHEET SIZE: 24 x 36
	DRAWING NO.	A-101
		DISCIPLINE SHEET TYPE SEQUENCE
		SHEET 07 OF 28

DOOR OPENING

1507 | DOOR LEAF TYPE A / FRAME F-1 | STC-50 / RF READY

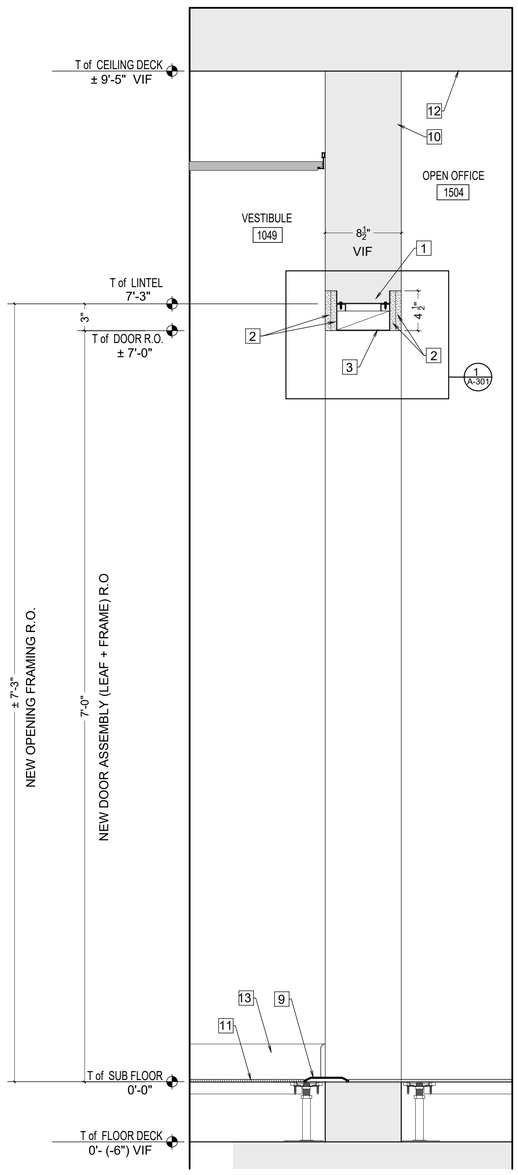

A-1 SECTION A | AT DOOR OPENING 1507 (W/O DOOR FRAME)
1-1/2" = 1'-0"

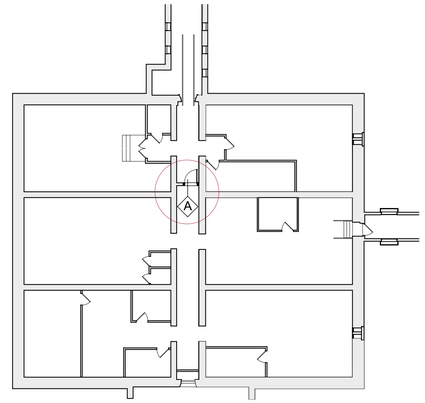

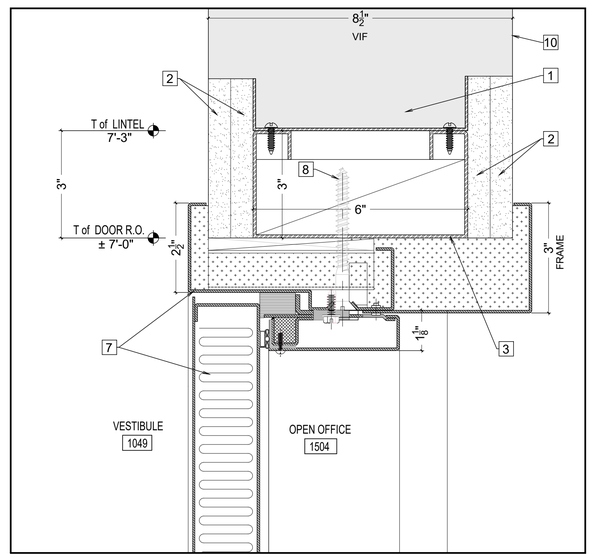

B-2 DETAIL 1
6" = 1'-0"

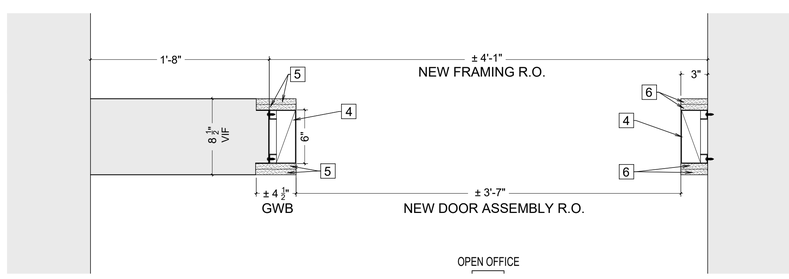

A-2 JAMB FRAMING | AT DOOR OPENING 1507 (W/O DOOR FRAME)
1-1/2" = 1'-0"

GENERAL WALL CONSTRUCTION NOTES

1. WALL FRAMING TO CONSIST OF ONE OF THE FOLLOWING:

   A. CLARK-DIETRICH : PRO STUD DRYWALL FRAMING SYSTEM
   B. MARINO WARE: SOUND GUARD ACOUSTICALLY DECOUPLED STEEL STUDS

   LINTEL TO CONSIST OF ONE OF THE FOLLOWING: (SEE DETAILS IN A-501 - A-1, A-3, A-5)

   A. CLARK-DIETRICH : HDS FRAMING SYSTEM WITH HDSC HEADER BRACKET
   B. CLARK-DIETRICH : RED HEADER PRO WITH HDSC HEADER BRACKET

   JAMBS TO CONSIST OF:

   A. CLARK-DIETRICH : HDS FRAMING SYSTEM

2. CONTINUOUS CAULK AT ALL INTERSECTIONS BETWEEN THE PARTITION / WALL W/ OTHER SURFACES ON BOTH SIDES AIR TIGHT (HORIZONTAL-DECK OR VERTICAL- OTHER WALLS) WITH NON HARDENING CAULK SUCH AS:

   A. NON-HARDENING POLYURETHANE TYPE, ASTM C920, TYPE M, CLASS 25, GRADE NS: TREMCO "DYMERIC 511" OR APPROVED EQUAL.

   B. NON-HARDENING POLYSULPHIDE TYPE, ASTM C920, ONE- PART: PECORA "GC-9" OR EQUAL

   C. NON-HARDENING SILICONE TYPE, ASTM C920, TYPE S, CLASS 25, GRADE NS, ONE-PART, LOW MODULE USGE "SILPRUF", DOW CORNING 790, TREMCO "SPECTRUM" 1 INCH, PECORA 864, OR APPROVED EQUAL.

3. WALL (NEW & EXISTING PORTIONS) MUST BE UNIFORMLY FINISHED ON BOTH SIDES, FROM FLOOR SLAB (TRUE FLOOR) TO UNDER- SIDE OF FLOOR PLATE (TRUE CEILING).

4. ALL GWB INSTALLATION MUST BE AS FOLLOWS:

   A. PANEL INSTALLATION TO BE FULL WALL HEIGHT FROM FLOOR SLAB (TRUE FLOOR) TO UNDER- SIDE OF THE CEILING PLATE (TRUE CEILING) OR FILLING ENTIRE PORTION OF WALL ABOVE AND BELOW WHEN A DOOR OPENING;
   B. CROSS LAY ALL MULTIPLE LAYERS OF GWB. DO NOT LAY ONE SEAM DIRECTLY OVER THE ONE BENEATH;
   C. FILL ALL SEAMS BETWEEN THE GWB SHEETS W/ ACOUSTIC SEALANT PRIOR TO TAPING AND SPACKLING SEAMS;
   D. APPLY P-1 FINISH AS PER FINISHES SCHEDULE.

5. FURNISH AND INSTALL BLOCKING AS REQUIRED AT ALL LOCATIONS FOR THE PROPER AND SECURE INSTALLATION OF ALL WALL MOUNTED EQUIPMENT OR MILLWORK WHETHER SPECIFICALLY NOTED IN THE DRAWINGS OR NOT.

KEY NOTES

1. SHORTEN FRAMING TO ENLARGE OPENING. INSTALL A NEW 6" 12 GA METAL CONTINUOUS RUNNER ANCHORED WITH (2) #10-16 SCREWS AT EACH STUD (SEE GENERAL WALL CONSTRUCTION NOTE "1") TO TERMINATE THE SHORTENED FRAMING MEMBERS.

2. EXISTING GWB NEEDS TO BE CUT BACK ENOUGH TO ALLOW FOR THE INSERTION OF THE NEW HEADER AND TRACK. INSTALL (2) LAYERS OF 5/8" GYPSUM WALL BOARD GOLD BOND FIRE-SHIELD OR EQUAL EACH SIDE OF THE WALL INSTALLED AS PER GENERAL CONSTRUCTION NOTE "4". WALL ASSEMBLY WHEN COMPLETED MUST COMPLY WITH STC-50 SOUND GROUP 4

3. AFTER REMOVING THE SECTION OF WALL NEEDED TO ENLARGE THE OPENING, INSTALL A 6" x 3" CLARK DIETRICH 600HDS300-97 (12 GA) LINTEL SUPPORTED WITH 5-7/8" x 3" CLARK DIETRICH 587HDSC300-97 (12 GA) HEADER BRACKET. BRACKET TO BE FASTENED TO HDS JAMBS AS REQUIRED BY DESIGN. SEE GENERAL WALL CONSTRUCTION NOTE "1"; IF A DIFFERENT HEADER IS SELECTED, ADJUST HEIGHT. INSERT WOOD BLOCKING AS NEEDED TO FASTEN FRAME
   HEADERS MUST BE 1/2" LESS THAN ROUGH OPENING WIDTH TO FIT INSIDE HDSC HEADER BRACKETS. THE HEADER MEMBER MUST SPAN ENTIRE LENGTH OF OPENING WITHOUT SPLICES.

4. AFTER REMOVING THE SECTION OF WALL NEEDED TO ENLARGE THE OPENING, INSTALL 6" x 3" CLARK DIETRICH 600HDS300-97 (12 GA) JAMBS FASTENED TO EXISTING FRAMING OR AS REQUIRED BY DESIGN. SEE GENERAL WALL CONSTRUCTION NOTE "1". INSERT WOOD BLOCKING AS NEEDED TO FASTEN FRAME

5. EXISTING GWB NEEDS TO BE CUT BACK ENOUGH TO ALLOW FOR THE INSERTION OF THE NEW JAMBS. INSTALL (2) LAYERS OF 5/8" GYPSUM WALL BOARD GOLD BOND FIRE-SHIELD OR EQUAL EACH SIDE OF THE WALL INSTALLED AS PER GENERAL CONSTRUCTION NOTE "4". WALL ASSEMBLY WHEN COMPLETED MUST COMPLY WITH STC-50 SOUND GROUP 4

6. INSTALL (2) LAYERS OF 5/8" GYPSUM WALL BOARD GOLD BOND FIRE-SHIELD OR EQUAL EACH SIDE OF THE WALL INSTALLED AS PER GENERAL CONSTRUCTION NOTE "4". WALL ASSEMBLY WHEN COMPLETED MUST COMPLY WITH STC-50 SOUND GROUP 4

7. NEW STC-50 SOUND GROUP 4, 60 MIN FIRE RATED DOOR ASSEMBLY AS PER DOOR SCHEDULE. ASSEMBLY MUST INCLUDE A 1 3/4" ACOUSTIC STEEL DOOR LEAF TYPE A & STEEL SPLIT FRAME (14 GA MIN) TYPE F-1. THE FRAME MUST HAVE ALL VOIDS IN THE HEAD AND JAMBS PACKED W/ 6 TO 12 LB DENSITY MINERAL WOOL. STC-50 DOOR LEAF & FRAME MUST BE PURCHASED AS A SET.
   DOOR HARDWARE AS PER HARDWARE SCHEDULES MEETING FEDERAL SPECIFICATION FF-L-2740 / UL 2050 INCLUDING, BUT NOT LIMITED TO, COMMERCIAL GRADE 1 HARDWARE FITTED WITH HIGH SECURITY KEY CYLINDERS IN COMPLIANCE WITH UL 437, AUTOMATIC NON-HOLD OPEN DOOR CLOSER, THRESHOLD, PERIMETER SEALS, AND AUTOMATIC DOOR BOTTOM / SWEEPS. PROVIDE LOCKSETS THAT ARE AMERICAN NATIONAL STANDARDS INSTITUTE /BUILDERS HARDWARE MANUFACTURERS ASSOCIATION ANSI/BHMA A156.13, SERIES 1000, GRADE 1, MORTISE. PROVIDE LOCK CORES COMPATIBLE WITH THE EXISTING BUILDING-WIDE KEYING SYSTEM. PROVIDE NEW CDX10 LOCK AND REINSTALL CARD READER (IF IT WAS MOVED). HARDWARE TO BE INSTALLED BY DOOR MANUFACTURER

8. ANCHOR FRAME HEAD WITH 3/8" Ø FASTENERS @ 12" O.C.

9. 1/4" ADA/ABA THRESHOLD INSTALLED ON TOP OF RAISED FLOOR PANEL AS PART OF THE DOOR ASSEMBLY. DOOR BOTTOM REQUIRES FLUSH LEVEL SEALING SURFACE. ALUMINUM, OR STAINLESS STEEL THRESHOLD RECOMMENDED. DO NOT SEAL AGAINST CARPET. FLOOR ANCHORS TO BE FABRICATED OF SAME MATERIAL AS FRAME MATERIAL. MINIMUM 14 GA. WELD ANCHORS INSIDE EACH JAMB FOR FLOOR ANCHORAGE.

10. PREPARE ALL WALLS AND OTHER PAINTED ELEMENTS TO RECEIVE A NEW LEVEL 4 PAINT FINISH AS PER FINISHES SCHEDULE

11. ALL FLOOR PANELS ARE TO BE CLEANED AFTER EXISTING CARPET IS DEMOLISHED. TILE GLUE AND OTHER DEBRIS MUST BE FULLY REMOVED PRIOR TO INSTALLING NEW BUILDING SPEC CARPET TILE THROUGHOUT.

12. EXISTING CEILING PAINTED BLACK W/O ACT AND GRID, CABLE TRAYS, LIGHT FIXTURES AND ALL OTHER COMPONENTS OF THE FIRE SUPPRESSION, FIRE ALARM, EMERGENCY EGRESS, AND HVAC TO REMAIN COMPONENTS OF THE FIRE SUPPRESSION, FIRE ALARM, EMERGENCY EGRESS, AND HVAC TO REMAIN UNALTERED. PROTECT DURING CONSTRUCTION.

13. INSTALL NEW WALL BASE AS PER FINISHES SCHEDULE

MERIDIEN GROUP

MERIDIEN GROUP, LLC
208 SOUTH KING ST. SUITE 303
LEESBURG, VA 20175
(703) 777-8285
www.meridiengroupllc.com

CITADEL DCA
ARCHITECTURE | HISTORIC PRESERVATION | PLANNING | DESIGN

CERTIFICATIONS

KEY PLAN

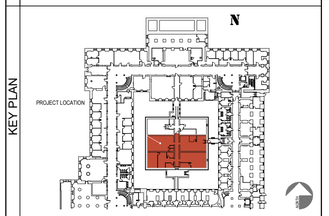

REVISION NOTES

MARK	DATE	DESCRIPTION

GRAPHIC SCALE

6" =1'-0" 0 1" 2" 3" 4" 5" 6"
1 1/2" =1'-0" 0 2" 4" 6" 8" 10" 1' 2'
CAUTION: IF THIS DRAWING IS A REDUCTION THIS GRAPHIC SCALE MUST BE USED

CONTRACTORS	A/E CON. NO.	
	A/E TASK NO.	
	CONS. CONTR	
	CONS. WORK	
	PRIME A/E	MERIDIEN GROUP / CITADEL DCA
	SUB A/E	
BUILDING	NAME	
	STREET	
	CITY/ST./ZIP	WASHINGTON, DC
	BUILDING NO.	DC-
	OTHER	
	BUILDING NOs.	
	FACILITY CODE	
PROJECT	PROJECT TITLE	FEDERAL OFFICE BUILDING MT 1125 OFFICE RENOVATION
	PROJECT DESCRIPTION	RENOVATION OF FIRST FLOOR SUITE AND UPGRADE SECURITY
	PROJECT NO.	MT1125_26_005
	GSA PM	BARBARA CHOATE
	SUBMISSION	100% SUBMISSION REV-3
	SUB. DATE	15 JUNE 2026
DRAWING	DRAWING TITLE	OPENING 1507 WALL AND HEADER DETAILS
	FILE NAME	
	FLOOR NO.	1ST FLOOR
	DRAWN BY	AGF DATE DRAFTED: 04/24/2026
	CHECKED BY	LSP SHEET SIZE: 24 x 36
	DRAWING NO.	A-301
		DISCIPLINE SHEET TYPE SEQUENCE
		SHEET 08 OF 28

IF EXISTING WALL DOES NOT EXTEND DOWN TO FLOOR DECK FILL IN FRAMING AS FOLLOWS

1505 D

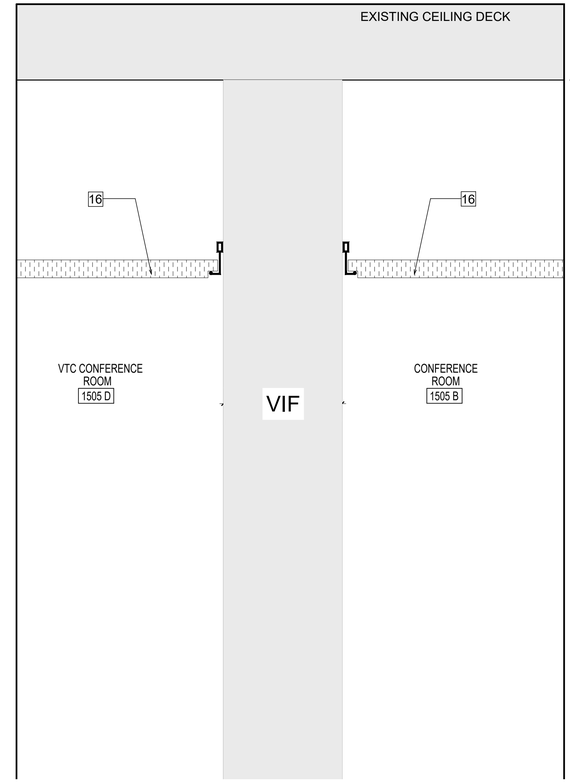

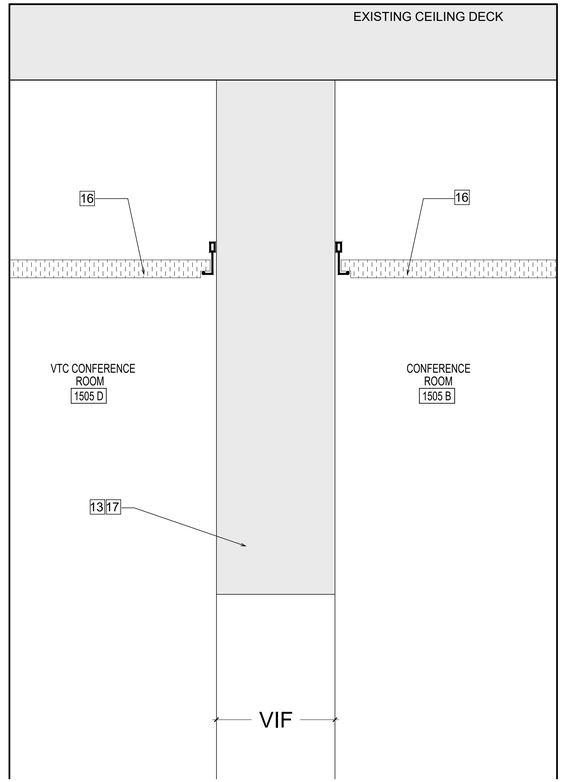

T of CEILING DECK
± 9'-5" VIF

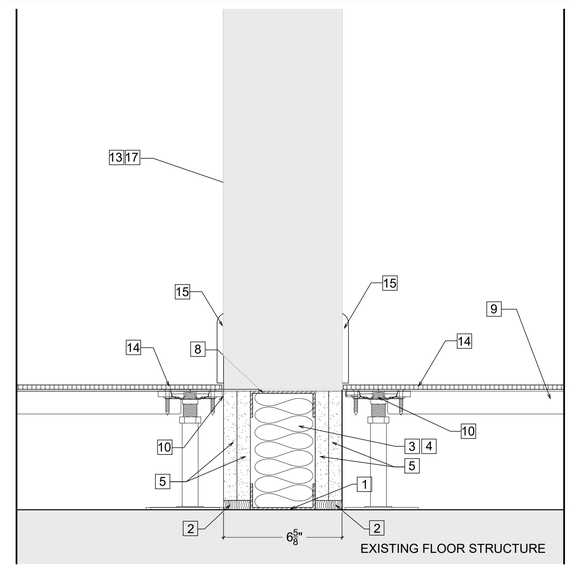

T of SUB FLOOR
0'-0"

T of FLOOR DECK
0'- (-6") VIF

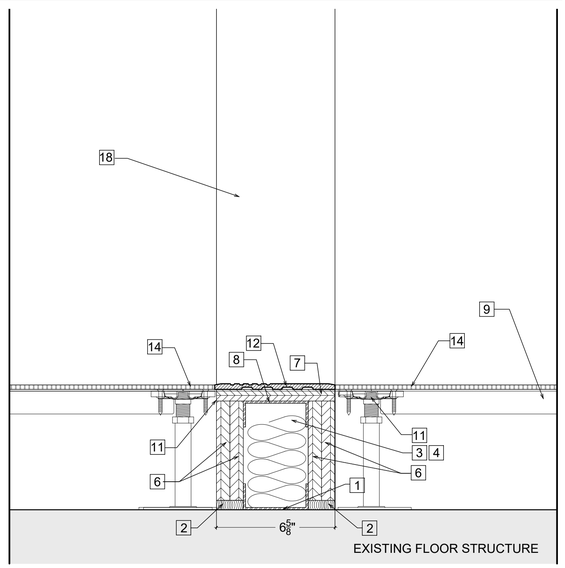

A-1 SECTION A | FILL UNDER SECTION OF WALL AT DOOR OPENING 1505 D
3" = 1'-0"

A-3 SECTION B | FILL UNDER SECTION OF WALL
3" = 1'-0"

GENERAL WALL CONSTRUCTION NOTES

1. WALL FRAMING TO CONSIST OF ONE OF THE FOLLOWING:

   A. CLARK-DIETRICH : PRO STUD DRYWALL FRAMING SYSTEM
   B. MARINO WARE: SOUND GUARD ACOUSTICALLY DECOUPLED STEEL STUDS

   LINTEL TO CONSIST OF ONE OF THE FOLLOWING: (SEE DETAILS IN A-501 - A-1, A-3, A-5)

   A. CLARK-DIETRICH : HDS FRAMING SYSTEM WITH HDSC HEADER BRACKET
   B. CLARK-DIETRICH : RED HEADER PRO WITH HDSC HEADER BRACKET

   JAMBS TO CONSIST OF:

   A. CLARK-DIETRICH : HDS FRAMING SYSTEM

2. CONTINUOUS CAULK AT ALL INTERSECTIONS BETWEEN THE PARTITION / WALL W/ OTHER SURFACES ON BOTH SIDES AIR TIGHT (HORIZONTAL-DECK OR VERTICAL- OTHER WALLS) WITH NON HARDENING CAULK SUCH AS:

   A. NON-HARDENING POLYURETHANE TYPE, ASTM C920, TYPE M, CLASS 25, GRADE NS: TREMCO "DYMERIC 511" OR APPROVED EQUAL.

   B. NON-HARDENING POLYSULPHIDE TYPE, ASTM C920, ONE- PART: PECORA "GC-9" OR EQUAL

   C. NON-HARDENING SILICONE TYPE, ASTM C920, TYPE S, CLASS 25, GRADE NS, ONE-PART, LOW MODULE USGE "SILPRUF", DOW CORNING 790, TREMCO "SPECTRUM" 1 INCH, PECORA 864, OR APPROVED EQUAL.

3. WALL (NEW & EXISTING PORTIONS) MUST BE UNIFORMLY FINISHED ON BOTH SIDES, FROM FLOOR SLAB (TRUE FLOOR) TO UNDER- SIDE OF FLOOR PLATE (TRUE CEILING).

4. ALL GWB INSTALLATION MUST BE AS FOLLOWS:

   A. PANEL INSTALLATION TO BE FULL WALL HEIGHT FROM FLOOR SLAB (TRUE FLOOR) TO UNDER- SIDE OF THE CEILING PLATE (TRUE CEILING) OR FILLING ENTIRE PORTION OF WALL ABOVE AND BELOW WHEN A DOOR OPENING;
   B. CROSS LAY ALL MULTIPLE LAYERS OF GWB. DO NOT LAY ONE SEAM DIRECTLY OVER THE ONE BENEATH;
   C. FILL ALL SEAMS BETWEEN THE GWB SHEETS W/ ACOUSTIC SEALANT PRIOR TO TAPING AND SPACKLING SEAMS;
   D. APPLY P-1 FINISH AS PER FINISHES SCHEDULE.

5. FURNISH AND INSTALL BLOCKING AS REQUIRED AT ALL LOCATIONS FOR THE PROPER AND SECURE INSTALLATION OF ALL WALL MOUNTED EQUIPMENT OR MILLWORK WHETHER SPECIFICALLY NOTED IN THE DRAWINGS OR NOT.

KEY NOTES

1. 12 GA METAL 3 5/8" CONTINUOUS RUNNER ANCHORED W/ TAPCON FASTENERS TO EXISTING CONCRETE SLAB. MECHANICAL FASTENERS TO BE AS FOLLOWS : ASTM C1513, CORROSION- RESISTANT- COATED, SELF-DRILLING, & SELF-TAPPING DRILL SCREWS. INSTALL PER MANUFACTURER'S REQUIREMENTS.
   BED TRACK IN NON-METALLIC, SHRINKAGE-RESISTANT GROUT AS FOLLOWS: ASTM C 1107, FACTORY-PACKAGED, NONMETALLIC AGGREGATE GROUT, NON CORROSIVE AND NON STAINING, MIXED W/ WATER TO CONSISTENCY SUITABLE FOR APPLICATION AND 30-MINUTE WORKING TIME. VERIFY DEPTH IN FIELD

2. CONTINUOUS ACOUSTICAL SEALANT FIRE SAFE ALONG TOP, BOTTOM, LEFT AND RIGHT JOINTS WITH PERPENDICULAR SURFACES AND AROUND ALL PIPES AND WALL PENETRATIONS. SEE GENERAL WALL CONSTRUCTION NOTE "2".

3. 3 5/8" 16 GA METAL STUDS @ 16" O.C. AS PER GENERAL WALL CONSTRUCTION NOTES

4. 3 1/2" ROCKWOOL ACOUSTICAL FIRE BATT INSULATION OR EQUAL FULL HEIGHT MATERIAL MUST BE FASTENED IN SUCH WAY AS TO PREVENT IT FROM SLIDING DOWN, LEAVING A VOID AT THE TOP.

5. INSTALL (2) LAYERS OF 5/8" GYPSUM WALL BOARD GOLD BOND FIRE-SHIELD OR EQUAL EACH SIDE OF THE WALL INSTALLED AS PER GENERAL CONSTRUCTION NOTE "4". WALL ASSEMBLY WHEN COMPLETED MUST COMPLY WITH STC-50 SOUND GROUP 4

6. (2) LAYERS OF 3/4" PLYWOOD

7. (1) LAYER OF 3/4" PLYWOOD

8. 3 5/8" 16GA HEADER TRACK

9. EXISTING TATE FLOOR PANEL TO REMAIN AS IS

10. EXISTING TATE FLOOR PANEL TO BE REINSTALLED AND ADJUSTED AFTER THE CONSTRUCTION OF THE NEW STC-50 WALL PORTION (UNDER SIDE). CUT PANEL WITHIN $\frac{1}{16}$" OFF THE WALL EACH SIDE

11. EXISTING TATE FLOOR PANEL TO BE REINSTALLED AND ADJUSTED AFTER THE CONSTRUCTION OF THE NEW STC-50 WALL PORTION (UNDER SIDE) AND THE INSTALLATION OF THE NEW STC-50 DOOR ARE COMPLETED. CUT PANEL WITHIN $\frac{1}{16}$" OFF THE WALL EACH SIDE

12. 1/4" ADA/ABA THRESHOLD INSTALLED ON TOP OF RAISED FLOOR PANEL AS PART OF THE DOOR ASSEMBLY. DOOR BOTTOM REQUIRES FLUSH LEVEL SEALING SURFACE. ALUMINUM, OR STAINLESS STEEL THRESHOLD RECOMMENDED. DO NOT SEAL AGAINST CARPET. FLOOR ANCHORS TO BE FABRICATED OF SAME MATERIAL AS FRAME MATERIAL. MINIMUM 14 GA. WELD ANCHORS INSIDE EACH JAMB FOR FLOOR ANCHORAGE.

13. PREPARE ALL WALLS AND OTHER PAINTED ELEMENTS TO RECEIVE A NEW LEVEL 4 PAINT FINISH AS PER FINISHES SCHEDULE

14. ALL FLOOR PANELS ARE TO BE CLEANED AFTER EXISTING CARPET IS DEMOLISHED. TILE GLUE AND OTHER DEBRIS MUST BE FULLY REMOVED PRIOR TO INSTALLING NEW BUILDING SPEC CARPET TILE THROUGHOUT.

15. INSTALL NEW WALL BASE AS PER FINISHES SCHEDULE

16. NEW ACT AND GRID AS PER FINISHES SCHEDULE. CABLE TRAYS, LIGHT FIXTURES AND ALL OTHER COMPONENTS OF THE FIRE SUPPRESSION, FIRE ALARM, EMERGENCY EGRESS, AND HVAC TO REMAIN COMPONENTS OF THE FIRE SUPPRESSION, FIRE ALARM, EMERGENCY EGRESS, AND HVAC TO REMAIN UNALTERED. PROTECT DURING CONSTRUCTION.

17. EXISTING WALL

18. EXISTING DOOR OPENING

MERIDIEN GROUP

MERIDIEN GROUP, LLC
208 SOUTH KING ST. SUITE 303
LEESBURG, VA 20175
(703) 777-8285
www.meridiengroupllc.com

DCA CITADEL
ARCHITECTURE | HISTORIC PRESERVATION | PLANNING | DESIGN

CERTIFICATIONS

KEY PLAN

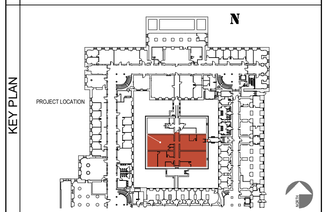

REVISION NOTES

MARK	DATE	DESCRIPTION

GRAPHIC SCALE

3" =1'-0"
0 2" 4" 6" 8" 10" 12"

CAUTION: IF THIS DRAWING IS A REDUCTION THIS GRAPHIC SCALE MUST BE USED

CONTRACTORS	A/E CON. NO.	
	A/E TASK NO.	
	CONS. CONTR	
	CONS. WORK	
	PRIME A/E	MERIDIEN GROUP / CITADEL DCA
	SUB A/E	
BUILDING	NAME	
	STREET	
	CITY/ST./ZIP	WASHINGTON, DC
	BUILDING NO.	DC-
	OTHER	
	BUILDING NOs.	
	FACILITY CODE	
PROJECT	PROJECT TITLE	FEDERAL OFFICE BUILDING MT 1125 OFFICE RENOVATION
	PROJECT DESCRIPTION	RENOVATION OF FIRST FLOOR SUITE AND UPGRADE SECURITY
	PROJECT NO.	MT1125_26_005
	GSA PM	BARBARA CHOATE
	SUBMISSION	100% SUBMISSION REV-3
	SUB. DATE	15 JUNE 2026
DRAWING	DRAWING TITLE	LOWER WALL FRAMING CONDITIONS
	FILE NAME	
	FLOOR NO.	1ST FLOOR
	DRAWN BY	AGF DATE DRAFTED: 04/24/2026
	CHECKED BY	LSP SHEET SIZE: 24 x 36
	DRAWING NO.	A-302

DISCIPLINE	SHEET TYPE	SEQUENCE
SHEET	09 OF	28

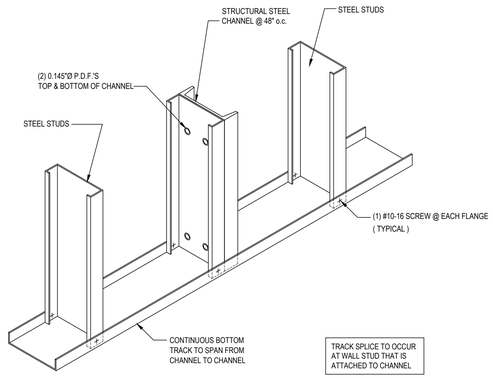

C-1 INFILL FRAMING
NTS

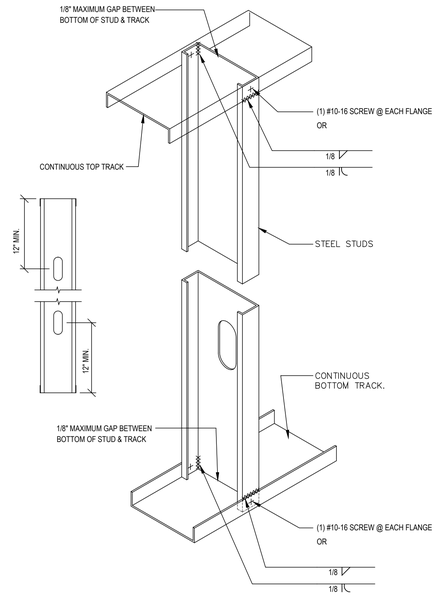

C-3 STUD TO TRACK ATTACHMENT
NTS

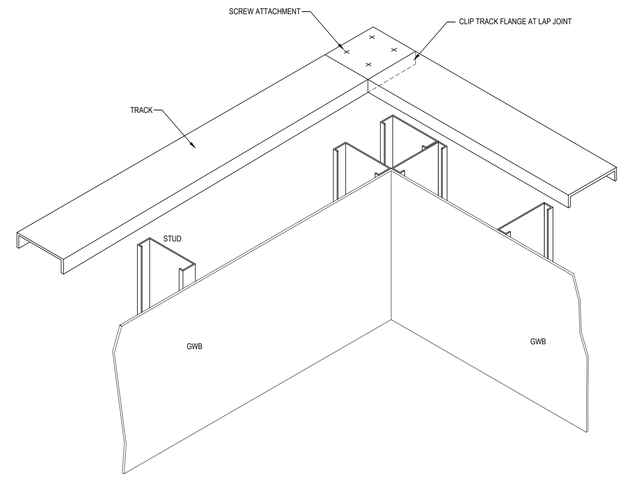

C-5 WALL FRAMING AT CORNER TRACK LAP CONNECTION
NTS

NOTES:

1. ALL RadHeader PRO™ AND HDS HEADERS MUST BE 1/2" LESS THAN ROUGH OPENING WIDTH TO FIT INSIDE HDSC HEADER BRACKETS.
2. ALL HEADER MEMBERS MUST SPAN ENTIRE LENGTH OF OPENING WITHOUT SPLICES

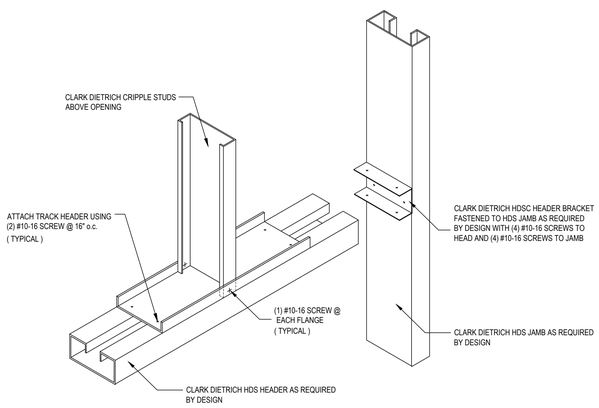

A-1 HDS HEADER CONNECTION
NTS

NOTE:

1. ALL HEADER MEMBERS MUST SPAN ENTIRE LENGTH OF OPENING WITHOUT SPLICES

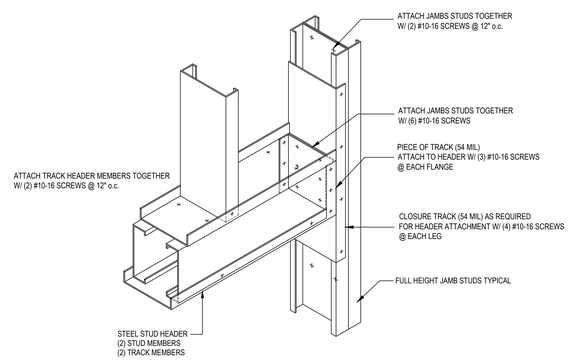

A-3 BOXED HEADER: JAMB DETAIL TRACK / SHOE
NTS

NOTE:

1. ALL HEADER MEMBERS MUST SPAN ENTIRE LENGTH OF OPENING WITHOUT SPLICES

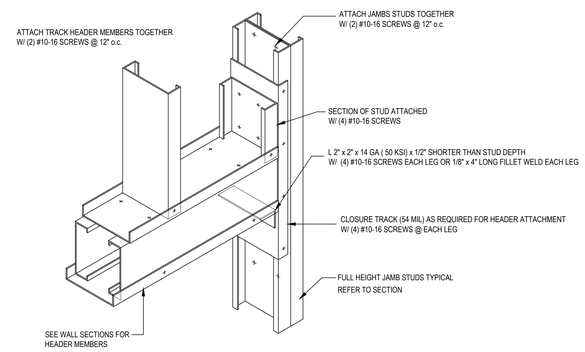

A-5 BOXED HEADER: JAMB DETAIL CLIPPED
NTS

MERIDIEN GROUP

MERIDIEN GROUP, LLC
208 SOUTH KING ST. SUITE 303
LEESBURG, VA 20175
(703) 777-8285
www.meridiengroupllc.com

CITADEL
ARCHITECTURE | HISTORIC PRESERVATION | PLANNING | DESIGN

CERTIFICATIONS

KEY PLAN

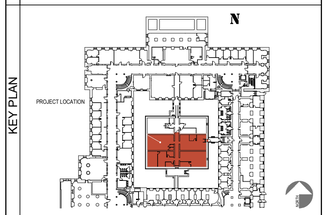

REVISION NOTES

MARK	DATE	DESCRIPTION

GRAPHIC SCALE

CAUTION: IF THIS DRAWING IS A REDUCTION THIS GRAPHIC SCALE MUST BE USED

CAUTION: IF THIS DRAWING IS A REDUCTION THIS GRAPHIC SCALE MUST BE USED

CONTRACTORS	A/E CON. NO.	
	A/E TASK NO.	
	CONS. CONTR	
	CONS. WORK	
	PRIME A/E	MERIDIEN GROUP / CITADEL DCA
	SUB A/E	
BUILDING	NAME	
	STREET	
	CITY/ST./ZIP	WASHINGTON, DC
	BUILDING NO.	DC-
	OTHER BUILDING NOs.	
	FACILITY CODE	
PROJECT	PROJECT TITLE	FEDERAL OFFICE BUILDING MT 1125 OFFICE RENOVATION
	PROJECT DESCRIPTION	RENOVATION OF FIRST FLOOR SUITE AND UPGRADE SECURITY
	PROJECT NO.	MT1125_26_005
	GSA PM	BARBARA CHOATE
	SUBMISSION	100% SUBMISSION REV-3
	SUB. DATE	15 JUNE 2026
DRAWING	DRAWING TITLE	FRAMING DETAILS
	FILE NAME	
	FLOOR NO.	1ST FLOOR
	DRAWN BY	AGF DATE DRAFTED: 04/24/2026
	CHECKED BY	LSP SHEET SIZE: 24 x 36
	DRAWING NO.	A-501
		DISCIPLINE SHEET TYPE SEQUENCE
		SHEET 10 OF 28

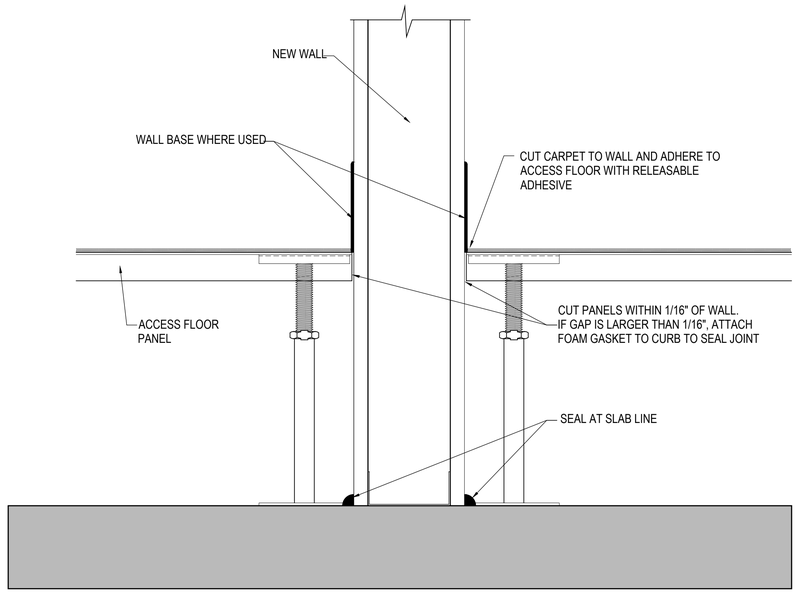

C-1 ACCESS FLOOR PERIMETER SEAL W/ WALL BASE
NTS

ADHESIVE AND SEALANTS. DEEP PENETRATIONS MUST BE CONTROLLED BY THE USE OF BACK-UP FILLER MATERIAL; SEE SEALANT MANUFACTURER'S RECOMMENDATIONS FOR THESE REQUIREMENTS.

THE FOLLOWING ARE GUN-GRADE SEALANTS WHICH HAVE BEEN USED FOR AIR PLENUM SEALING AND COMPLY WITH THE VOC CONTENT LIMITS OF LEED EQ CREDIT 4.1 LOW EMITTING MATERIALS:

SEAL BOND 93 SEAM AND PENETRATION SEALANT.
VOC CONTENT: <17G/L.WWW.SEAL-BOND.COM

PECORA AC-20 ACRYLIC LATEX SEALANT.
VOC CONTENT: 31 G/L. WWW.PECORA.COM

RCD CORP. #20 CLEAR ACRYLIC ADHESIVE SEALANT.
VOC CONTENT: <10 G/L. WWW.RCDMASTICS.COM

SONOLASTIC NP 1 ELASTOMERIC POLYURETHANE SEALANT.
VOC CONTENT: 43G/L. WWW.BUILDINGSYSTEMS.BASF.COM

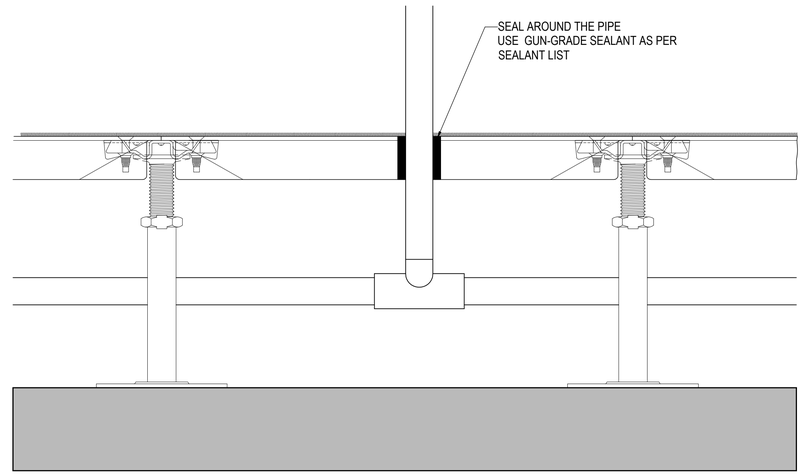

C-4 PIPE / CONDUIT PENETRATION
NTS

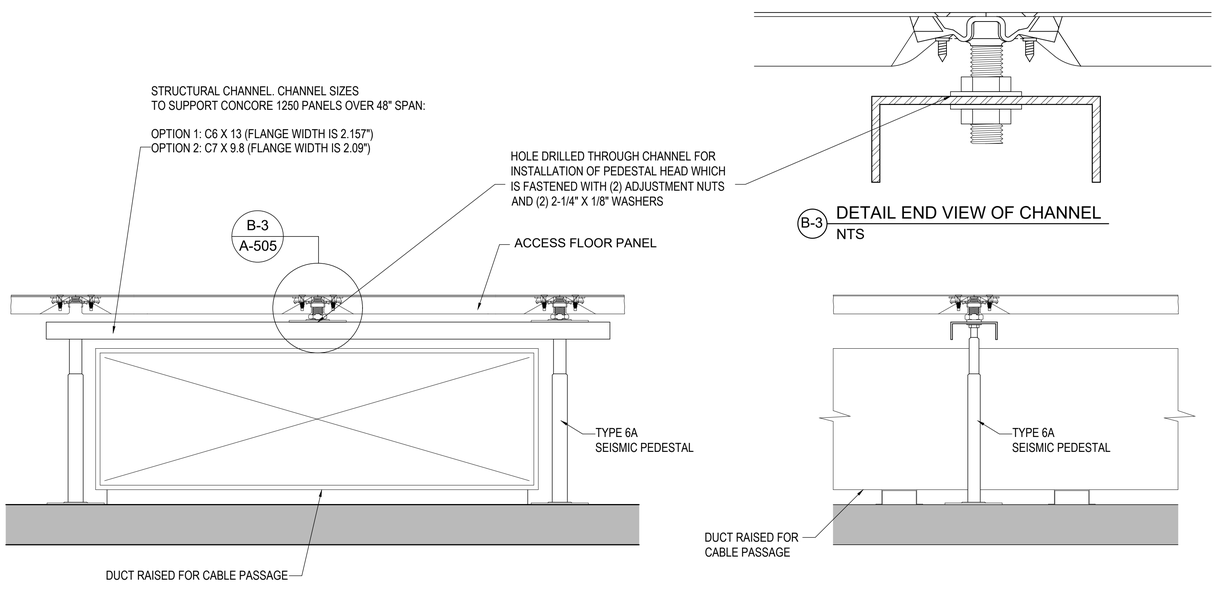

B-3 DETAIL END VIEW OF CHANNEL
NTS

A-1 BRIDGING OVER DUCT ON SUBFLOOR SIDE VIEW
NTS

A-3 BRIDGING OVER DUCT ON SUBFLOOR END VIEW
NTS

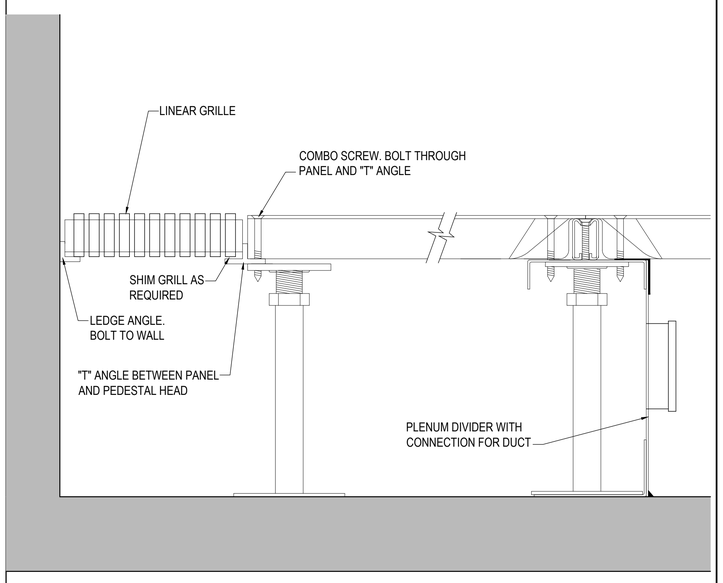

A-4 LINEAR GRILLE PERIMETER DETAIL
NTS

MERIDIEN GROUP
MERIDIEN GROUP, LLC
208 SOUTH KING ST. SUITE 303
LEESBURG, VA 20175
(703) 777-8285
www.meridiengroupllc.com

DCA CITADEL
ARCHITECTURE | HISTORIC PRESERVATION | PLANNING | DESIGN

CERTIFICATIONS

KEY PLAN

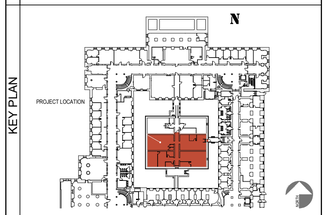

REVISION NOTES

MARK	DATE	DESCRIPTION

GRAPHIC SCALE

CAUTION: IF THIS DRAWING IS A REDUCTION THIS GRAPHIC SCALE MUST BE USED

CONTRACTORS	A/E CON. NO.	
	A/E TASK NO.	
	CONS. CONTR	
	CONS. WORK	
	PRIME A/E	MERIDIEN GROUP / CITADEL DCA
	SUB A/E	
BUILDING	NAME	
	STREET	
	CITY/ST./ZIP	WASHINGTON, DC
	BUILDING NO.	DC-
	OTHER	
	BUILDING NOs.	
	FACILITY CODE	
PROJECT	PROJECT TITLE	FEDERAL OFFICE BUILDING MT 1125 OFFICE RENOVATION
	PROJECT DESCRIPTION	RENOVATION OF FIRST FLOOR SUITE AND UPGRADE SECURITY
	PROJECT NO.	MT1125_26_005
	GSA PM	BARBARA CHOATE
	SUBMISSION	100% SUBMISSION REV-3
	SUB. DATE	15 JUNE 2026
DRAWING	DRAWING TITLE	RAISED FLOOR DETAILS
	FILE NAME	
	FLOOR NO.	1ST FLOOR
	DRAWN BY	AGF DATE DRAFTED: 04/24/2026
	CHECKED BY	LSP SHEET SIZE: 24 x 36
	DRAWING NO.	A- 502
	DISCIPLINE	SHEET TYPE SEQUENCE
	SHEET	11 OF 28

THE FOLLOWING ARE GUN-GRADE SEALANTS WHICH HAVE BEEN USED FOR AIR PLENUM SEALING AND COMPLY WITH THE VOC CONTENT LIMITS OF LEED EQ CREDIT 4.1 LOW EMITTING MATERIALS:

SEAL BOND 93 SEAM AND PENETRATION SEALANT.
VOC CONTENT: <17G/L.WWW.SEAL-BOND.COM

SONOLASTIC NP 1 ELASTOMERIC POLYURETHANE SEALANT.
VOC CONTENT: 43G/L. WWW.BUILDINGSYSTEMS.BASF.COM

PECORA AC-20 ACRYLIC LATEX SEALANT.
VOC CONTENT: 31 G/L. WWW.PECORA.COM

RCD CORP. #20 CLEAR ACRYLIC ADHESIVE SEALANT.
VOC CONTENT: <10 G/L. WWW.RCDMASTICS.COM

ADHESIVE AND SEALANTS. DEEP PENETRATIONS MUST BE CONTROLLED BY THE USE OF BACK-UP FILLER MATERIAL; SEE SEALANT MANUFACTURER'S RECOMMENDATIONS FOR THESE REQUIREMENTS.

FLOOR TRANSITIONS BY FINISHING MATERIALS IN AREAS W/ ACCESS PANELS

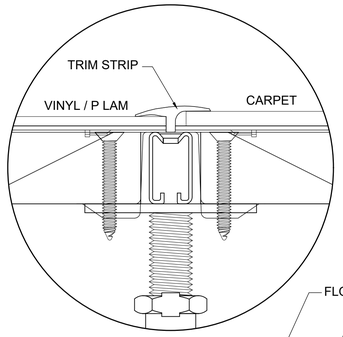

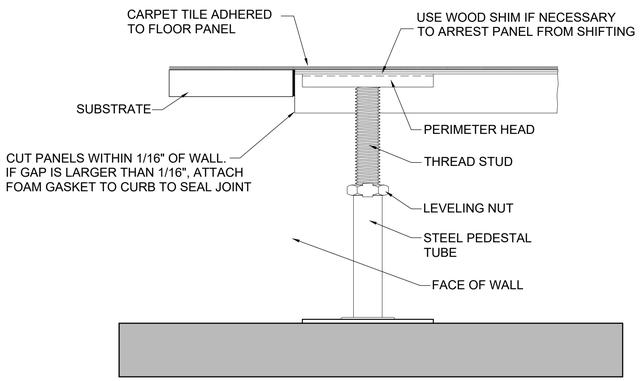

C-1 TRANSITION FROM CARPET TO CARPET
NTS

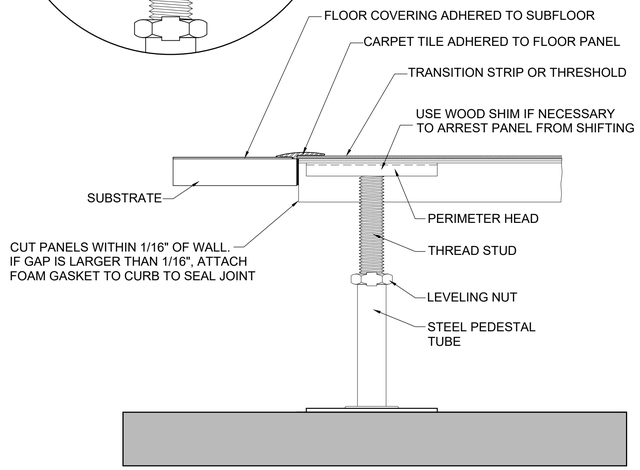

C-3 TRANSITION FROM CARPET TO OTHER FLOOR SURFACE
NTS

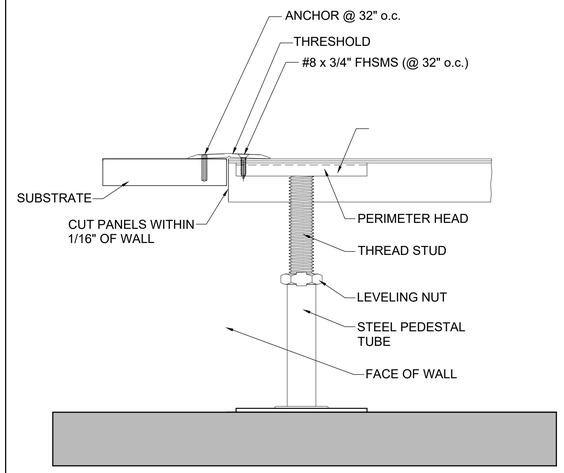

C-5 TRANSITION BETWEEN FLOOR SURFACES OTHER THAN CARPET
NTS

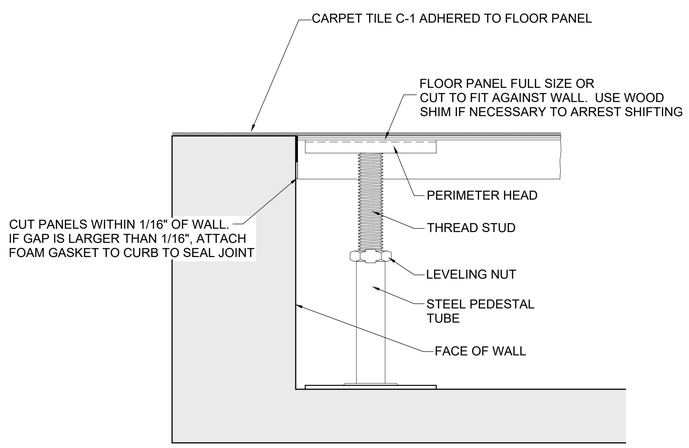

A-1 TRANSITION FROM CARPET TO CARPET
NTS

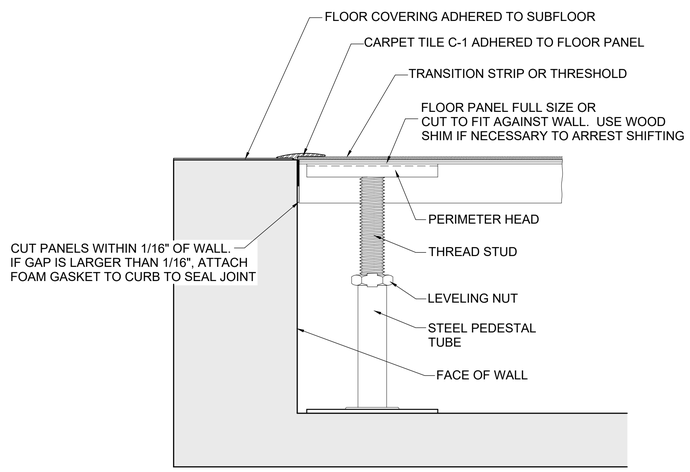

A-3 TRANSITION FROM CARPET TO OTHER FLOOR SURFACE
NTS

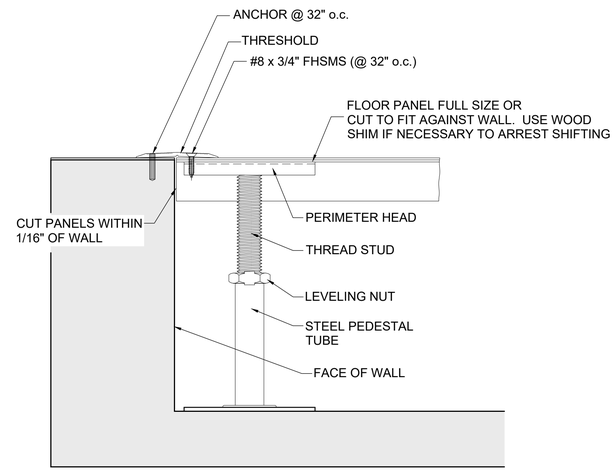

A-5 TRANSITION BETWEEN FLOOR SURFACES OTHER THAN CARPET
NTS

MERIDIEN GROUP

MERIDIEN GROUP, LLC
208 SOUTH KING ST. SUITE 303
LEESBURG, VA 20175
(703) 777-8285
www.meridiengroupllc.com

CITADEL
ARCHITECTURE | HISTORIC PRESERVATION | PLANNING | DESIGN

CERTIFICATIONS

KEY PLAN

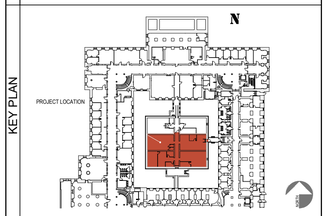

REVISION NOTES

MARK	DATE	DESCRIPTION

GRAPHIC SCALE

CAUTION: IF THIS DRAWING IS A REDUCTION THIS GRAPHIC SCALE MUST BE USED

CONTRACTORS	
A/E CON. NO.	
A/E TASK NO.	
CONS. CONTR	
CONS. WORK	
PRIME A/E	MERIDIEN GROUP / CITADEL DCA
SUB A/E	
BUILDING	
NAME	
STREET	
CITY/ST./ZIP	WASHINGTON, DC
BUILDING NO.	DC-
OTHER	
BUILDING NOs.	
FACILITY CODE	
PROJECT	
PROJECT TITLE	FEDERAL OFFICE BUILDING MT 1125 OFFICE RENOVATION
PROJECT DESCRIPTION	RENOVATION OF FIRST FLOOR SUITE AND UPGRADE SECURITY
PROJECT NO.	MT1125_26_005
GSA PM	BARBARA CHOATE
SUBMISSION	100% SUBMISSION REV-3
SUB. DATE	15 JUNE 2026
DRAWING	
DRAWING TITLE	RAISED FLOOR DETAILS
FILE NAME	
FLOOR NO.	1ST FLOOR
DRAWN BY	AGF DATE DRAFTED: 04/24/2026
CHECKED BY	LSP SHEET SIZE: 24 x 36
DRAWING NO.	A- 503
	DISCIPLINE SHEET TYPE SEQUENCE
	SHEET 12 OF 28

DOOR OPENING

1507

H.M. DOOR LEAF TYPE A / STEEL FRAME F-1
STC-50 / RF 60 db READY / 90 MINUTES F.R.

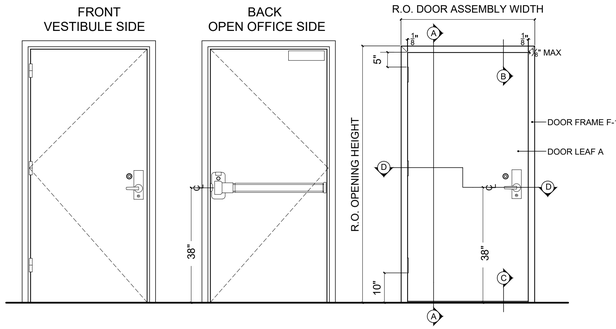

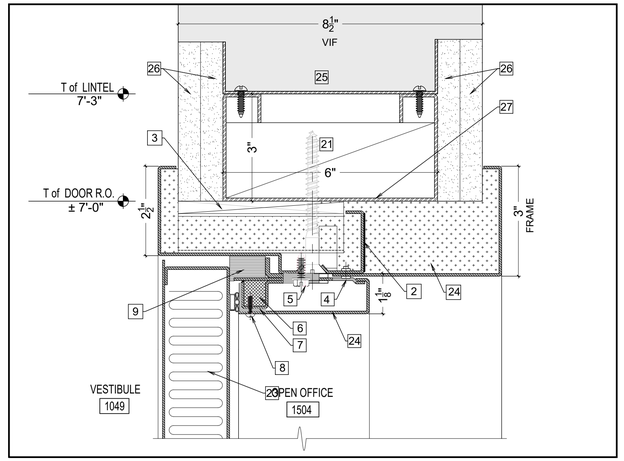

C-2 DETAIL B | DOOR HEAD
6" = 1'-0"

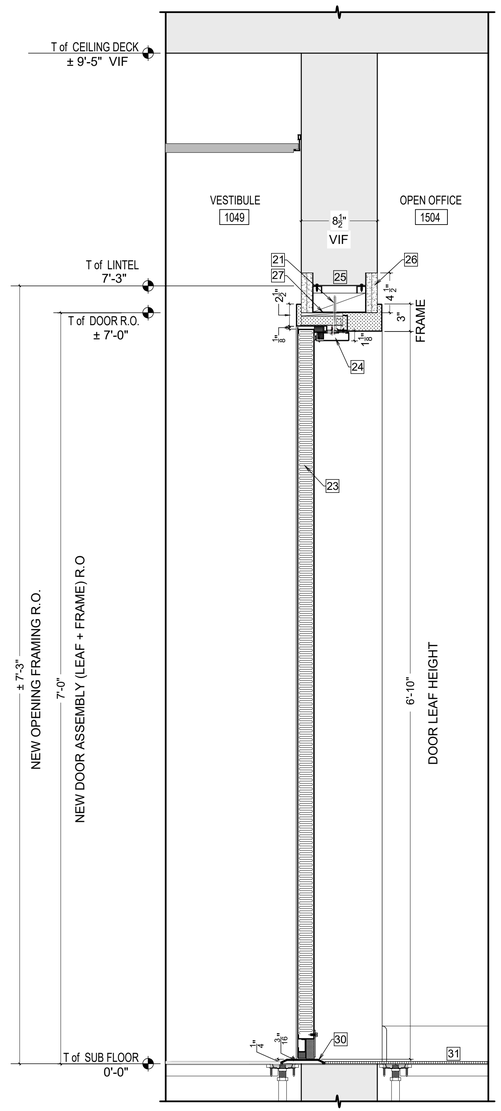

A-1 SECTION A-A | DOOR 1507
1-1/2" = 1'-0"

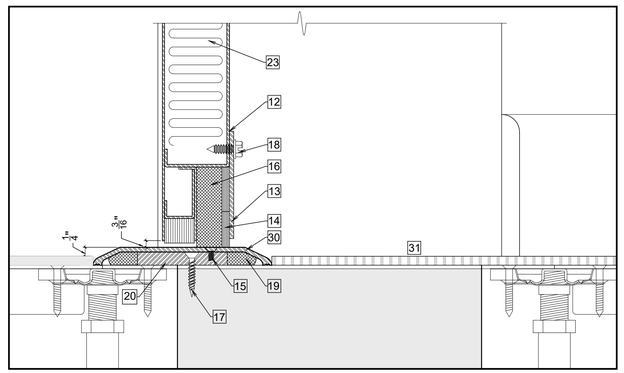

B-2 DETAIL C | DOOR BOTTOM
6" = 1'-0"

DETAIL E | DOOR LEAF END ABOVE AND BELOW THE LOCK
6" = 1'-0"

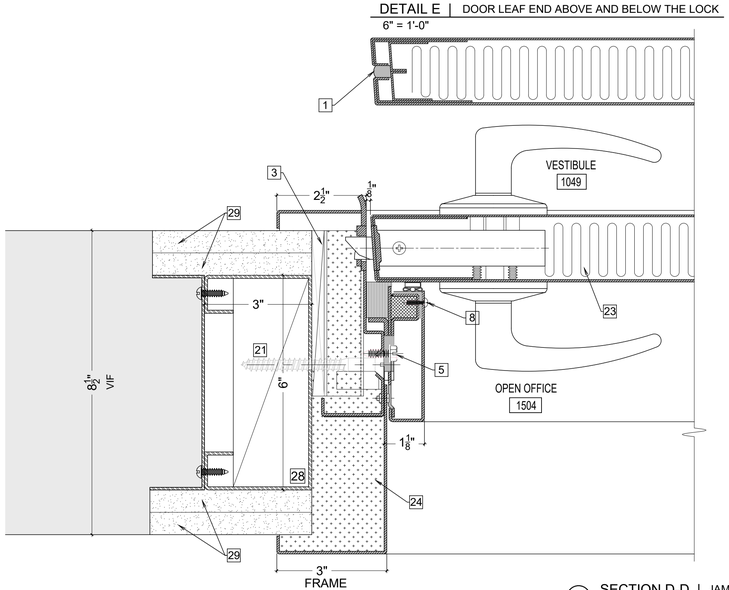

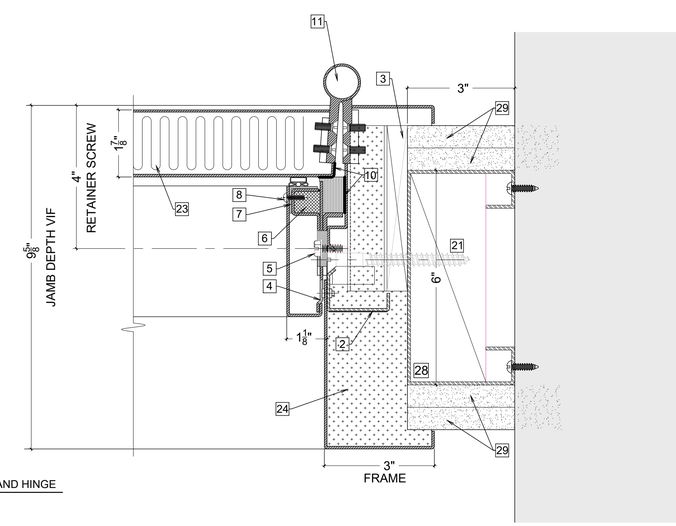

A-2 SECTION D-D | JAMBS AT LOCK AND HINGE
6" = 1'-0"

GENERAL NOTES

1. ACOUSTICAL PROPERTIES ARE BASED ON STC50 CONSTRUCTION.
2. DOOR AND FRAME TO RECEIVE ONE COAT OF RUST INHIBITIVE PRIMER.
3. FRAME IS EQUIPPED WITH SINGLE MAGNETIC SEALS AT HEAD AND JAMBS. DOOR IS EQUIPPED WITH A COMPRESSION DOOR BOTTOM.
4. DOOR WEIGHT IS 10.0 POUNDS PER SQUARE FOOT.
5. DOOR CAN BE EQUIPPED WITH STANDARD BUILDERS HARDWARE. CONCEALED HARDWARE IS NOT RECOMMENDED FOR ACOUSTICAL DOORS.
6. 14 GA. MIN SPLIT STEEL FRAME (ASTM 1008) W/ INTEGRAL TRIM. FRAME IS TO BE REINFORCED WHERE HARDWARE IS TO BE FIELD-MOUNTED. FRAME MUST HAVE ALL VOIDS IN HEAD AND JAMBS PACKED W/ 6 TO 12 POUND DENSITY MINERAL WOOL & ALL VOIDS BETWEEN WALL & FRAME CONTINUOUSLY CAULKED.

KEY NOTES

1. SOLID NEOPRENE SOUND ISOLATOR
3. BLOCKING / SHIMS
5. #14 x 3/4" LONG HHSMS RETAINER TO JAMB SCREW
7. FLANGED MAGNETIC GASKET
9. GASKET, 3 LAYERS
11. CAM-LIFT HINGE
13. 11 GA STAINLESS STEEL RETAINER PLATE
15. #10-24 X 3/8" LONG PHILLIPS DRIVE FLAT HEAD SS MACHINE SCREW
17. PERMANENT SPREADER BAR TO BE DRILLED BETWEEN THRESHOLD SCREWS FOR FLOOR ANCHORS 3/16" x 1-1/4" TAP-CON WITH STAR RECESS HEAD
19. PERMANENT SPREADER BAR (3/8" X 2") DRILLED AND TAPPED FOR THRESHOLD
21. ANCHOR FRAME HEAD/JAMBS WITH 3/8" Ø FASTENERS @ 12" O.C.
2. CONDUCTIVE MASK AND PEEL TAPE , STOP SIDE TRIM
4. 1/8" POP RIVET SECURING BACKFRAME
6. 3/4" x 3/4" SPONGE NEOPRENE
8. #6 x 1/2" LONG RHMS RETAINER COVER SCREW
10. CONDUCTIVE MASK AND PEEL TAPE ON DOOR AND FRAME
12. CONDUCTIVE MASK AND PEEL TAPE AT DOOR BOTTOM
14. GASKET 2 PLACES
16. 5/8" x 2" SPONGE NEOPRENE
18. 1/4"- 20 x 3/4" LONG PHILLIPS DRIVE PAN HEAD SS DOOR BOTTOM SCREW
20. GASKET BOTH SIDES OF SPREADER BAR
22. (2) LAYERS OF 5/8" GYPSUM WALL BOARD GOLD BOND FIRE-SHIELD OR EQUAL EACH SIDE OF THE WALL WALL ASSEMBLY WHEN COMPLETED MUST COMPLY WITH STC-50 SOUND GROUP 4
23. NEW STC-50 SOUND GROUP 4, 60 MIN FIRE RATED, 1 3/4" ACOUSTIC STEEL DOOR LEAF TYPE A. DOOR HARDWARE AS PER HARDWARE SCHEDULES MEETING FEDERAL SPECIFICATION FF-L-2740 / UL 2050 INCLUDING, BUT NOT LIMITED TO, COMMERCIAL GRADE 1 HARDWARE FITTED WITH HIGH SECURITY KEY CYLINDERS IN COMPLIANCE WITH UL 437, AUTOMATIC NON-HOLD OPEN DOOR CLOSER, THRESHOLD, PERIMETER SEALS, AND AUTOMATIC DOOR BOTTOM / SWEEPS. PROVIDE LOCKSETS THAT ARE AMERICAN NATIONAL STANDARDS INSTITUTE /BUILDERS HARDWARE MANUFACTURERS ASSOCIATION ANSI/BHMA A156.13, SERIES 1000, GRADE 1, MORTISE. PROVIDE LOCK CORES COMPATIBLE WITH THE EXISTING BUILDING-WIDE KEYING SYSTEM. PROVIDE NEW CDX10 LOCK AND REINSTALL CARD READER (IF IT WAS MOVED). HARDWARE TO BE INSTALLED BY DOOR MANUFACTURER
24. STEEL SPLIT FRAME (14 GA MIN) TYPE F-1. THE FRAME MUST HAVE ALL VOIDS IN THE HEAD AND JAMBS PACKED W/ 6 TO 12 LB DENSITY MINERAL WOOL. STC-50 DOOR LEAF & FRAME MUST BE PURCHASED AS A SET.
25. SHORTEN FRAMING TO ENLARGE OPENING. INSTALL A NEW 6" 12 GA METAL CONTINUOUS RUNNER ANCHORED WITH (2) #10-16 SCREWS AT EACH STUD (SEE GENERAL WALL CONSTRUCTION NOTE "1") TO TERMINATE THE SHORTENED FRAMING MEMBERS.
26. EXISTING GWB NEEDS TO BE CUT BACK ENOUGH TO ALLOW FOR THE INSERTION OF THE NEW HEADER AND TRACK. INSTALL (2) LAYERS OF 5/8" GYPSUM WALL BOARD GOLD BOND FIRE-SHIELD OR EQUAL EACH SIDE OF THE WALL INSTALLED AS PER GENERAL CONSTRUCTION NOTE "4". WALL ASSEMBLY WHEN COMPLETED MUST COMPLY WITH STC-50 SOUND GROUP 4
27. AFTER REMOVING THE SECTION OF WALL NEEDED TO ENLARGE THE OPENING, INSTALL A 6" X 3" CLARK DIETRICH 600HDS300-97 (12 GA) LINTEL SUPPORTED WITH 5-7/8" X 3" CLARK DIETRICH 587HDSC300-97 (12 GA) HEADER BRACKET. BRACKET TO BE FASTENED TO HDS JAMBS AS REQUIRED BY DESIGN. SEE GENERAL WALL CONSTRUCTION NOTE "1"; IF A DIFFERENT HEADER IS SELECTED, ADJUST HEIGHT. INSERT WOOD BLOCKING AS NEEDED TO FASTEN FRAME
HEADERS MUST BE 1/2" LESS THAN ROUGH OPENING WIDTH TO FIT INSIDE HDSC HEADER BRACKETS. THE HEADER MEMBER MUST SPAN ENTIRE LENGTH OF OPENING WITHOUT SPLICES.
28. AFTER REMOVING THE SECTION OF WALL NEEDED TO ENLARGE THE OPENING, INSTALL 6" X 3" CLARK DIETRICH 600HDS300-97 (12 GA) JAMBS FASTENED TO EXISTING FRAMING OR AS REQUIRED BY DESIGN. SEE GENERAL WALL CONSTRUCTION NOTE "1". INSERT WOOD BLOCKING AS NEEDED TO FASTEN FRAME
29. EXISTING GWB NEEDS TO BE CUT BACK ENOUGH TO ALLOW FOR THE INSERTION OF THE NEW JAMBS. INSTALL (2) LAYERS OF 5/8" GYPSUM WALL BOARD GOLD BOND FIRE-SHIELD OR EQUAL EACH SIDE OF THE WALL INSTALLED AS PER GENERAL CONSTRUCTION NOTE "4". WALL ASSEMBLY WHEN COMPLETED MUST COMPLY WITH STC-50 SOUND GROUP 4
30. 1/4" ADA/ABA THRESHOLD INSTALLED ON TOP OF RAISED FLOOR PANEL AS PART OF THE DOOR ASSEMBLY. DOOR BOTTOM REQUIRES FLUSH LEVEL SEALING SURFACE. ALUMINUM, OR STAINLESS STEEL THRESHOLD RECOMMENDED. DO NOT SEAL AGAINST CARPET. FLOOR ANCHORS TO BE FABRICATED OF SAME MATERIAL AS FRAME MATERIAL. MINIMUM 14 GA. WELD ANCHORS INSIDE EACH JAMB FOR FLOOR ANCHORAGE.
31. NEW CARPET TILE ON CLEANED EXISTING RAISED FLOOR PANEL SYSTEM

MERIDIEN GROUP

MERIDIEN GROUP, LLC
208 SOUTH KING ST. SUITE 303
LEESBURG, VA 20175
(703) 777-8285
www.meridiengroupllc.com

CITADEL
ARCHITECTURE | HISTORIC PRESERVATION | PLANNING | DESIGN

CERTIFICATIONS

KEY PLAN

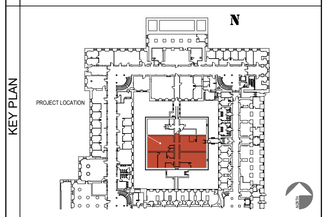

REVISION NOTES

MARK	DATE	DESCRIPTION

GRAPHIC SCALE

6" =1'-0" 0 1" 2" 3" 4" 5" 6"
1 1/2" =1'-0" 0 2" 4" 6" 8" 10" 1' 2'
CAUTION: IF THIS DRAWING IS A REDUCTION THIS GRAPHIC SCALE MUST BE USED

CONTRACTORS	A/E CON. NO.	
	A/E TASK NO.	
	CONS. CONTR	
	CONS. WORK	
	PRIME A/E	MERIDIEN GROUP / CITADEL DCA
	SUB A/E	
BUILDING	NAME	
	STREET	
	CITY/ST./ZIP	WASHINGTON, DC
	BUILDING NO.	DC-
	OTHER	
	BUILDING NOs.	
	FACILITY CODE	
PROJECT	PROJECT TITLE	FEDERAL OFFICE BUILDING MT 1125 OFFICE RENOVATION
	PROJECT DESCRIPTION	RENOVATION OF FIRST FLOOR SUITE AND UPGRADE SECURITY
	PROJECT NO.	MT1125_26_005
	GSA PM	BARBARA CHOATE
	SUBMISSION	100% SUBMISSION REV-3
	SUB. DATE	15 JUNE 2026
DRAWING	DRAWING TITLE	OPENING 1507 DOOR AND HEADER DETAILS
	FILE NAME	
	FLOOR NO.	1ST FLOOR
	DRAWN BY	AGF DATE DRAFTED: 04/24/2026
	CHECKED BY	LSP SHEET SIZE: 24 x 36
	DRAWING NO.	A-504
		DISCIPLINE SHEET TYPE SEQUENCE
		SHEET 13 OF 28

DOOR OPENING

1505 D | WOOD DOOR LEAF TYPE B / STEEL FRAME F-2 STC-50 LEVEL 4

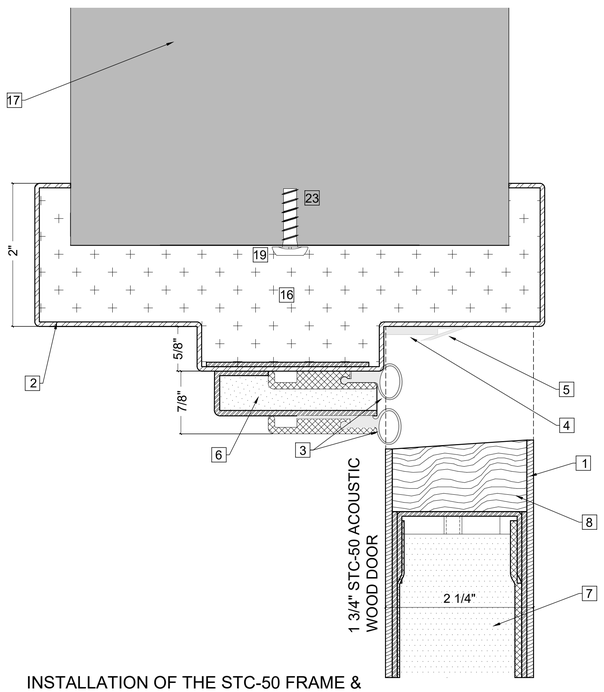

B-1 INSTALLATION OF THE STC-50 FRAME & WOOD-CLAD DOOR / HEAD DETAIL A
FULL SIZE

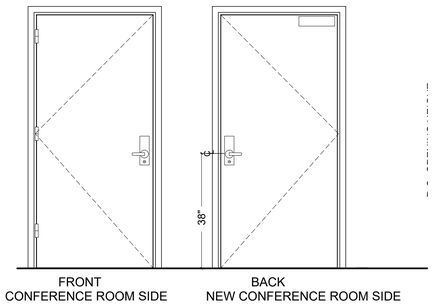

D-3 DOOR ELEVATIONS WITH CASING
1/2" = 1'-0"

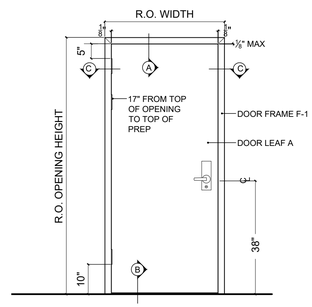

C-3 DOOR AND FRAME ELEVATION
1/2" = 1'-0"

GENERAL NOTES

1. ACOUSTICAL PROPERTIES ARE BASED ON STC50 CONSTRUCTION.
2. FRAME TO RECEIVE ONE COAT OF RUST INHIBITIVE PRIMER.
3. FRAME IS EQUIPPED WITH SINGLE MAGNETIC SEALS AT HEAD AND JAMBS. DOOR IS EQUIPPED WITH A COMPRESSIONDOOR BOTTOM.
4. DOOR WEIGHT IS 10.0 POUNDS PER SQUARE FOOT.
5. DOOR CAN BE EQUIPPED WITH STANDARD BUILDERS HARDWARE. CONCEALED HARDWARE IS NOT RECOMMENDED FOR ACOUSTICAL DOORS.
6. 14 GA. MIN SPLIT STEEL FRAME (ASTM 1008) W/ INTEGRAL TRIM. FRAME IS TO BE REINFORCED WHERE HARDWARE IS TO BE FIELD-MOUNTED. FRAME MUST HAVE ALL VOIDS IN HEAD AND JAMBS PACKED W/ 6 TO 12 POUND DENSITY MINERAL WOOL & ALL VOIDS BETWEEN WALL & FRAME CONTINUOUSLY CAULKED.

KEY NOTES

1. WOOD FACE VENEER WITH P-2 FINISH
2. PRESSED STEEL ACOUSTIC FRAME INSTALLED AT TOP LEVEL OF FINISHED FLOOR COVERING MATERIAL. (DO NOT EMBED IN FLOOR FINISHING).
3. ACOUSTIC PERIMETER SEALS TO BE FITTED AND FASTENED TO JAMBS AND HEAD BY INSTALLER ON SITE. ACOUSTIC SEALS DIMINISH THE FRAME CLEAR OPENING SIZE AS FOLLOWS: RABBET WIDTH LESS 2 1/2" AND RABBET HEIGHT LESS 1 1/4"
4. ACOUSTIC NEOPRENE
5. BRONZE SEAL
6. ACOUSTIC ABSORPTION CHAMBER
7. ACOUSTIC CORE
8. HARDWOOD STILES AND RAILS
9. CS FH SCREW
10. STEEL CHANNEL
11. ACOUSTIC SEMI-MORTISED DOOR BOTTOM
12. CAM-LIFT DOOR BOTTOM SEAL
13. ACOUSTIC LINING
14. 1/4" ADA/ABA THRESHOLD INSTALLED ON TOP OF RAISED FLOOR PANEL AS PART OF THE DOOR ASSEMBLY. DOOR BOTTOM REQUIRES FLUSH LEVEL SEALING SURFACE. ALUMINUM, OR STAINLESS STEEL THRESHOLD RECOMMENDED. DO NOT SEAL AGAINST CARPET. FLOOR ANCHORS TO BE FABRICATED OF SAME MATERIAL AS FRAME MATERIAL. MINIMUM 14 GA. WELD ANCHORS INSIDE EACH JAMB FOR FLOOR ANCHORAGE.
15. CAM LIFT HINGE
16. FILL FRAME WITH 12 lb DENSITY ROCKWOOL
17. EXISTING WALL
18. CONTINUOUS ACOUSTIC SEALANT
19. INSTALL FRAME USING PRESSURE ANCHORS TO FULLY ENGAGE STUDS @ 18" o.c. OR AS PER MANUFACTURER RECOMMENDATIONS
20. NEW CARPET TILE ON CLEANED EXISTING RAISED FLOOR PANEL SYSTEM

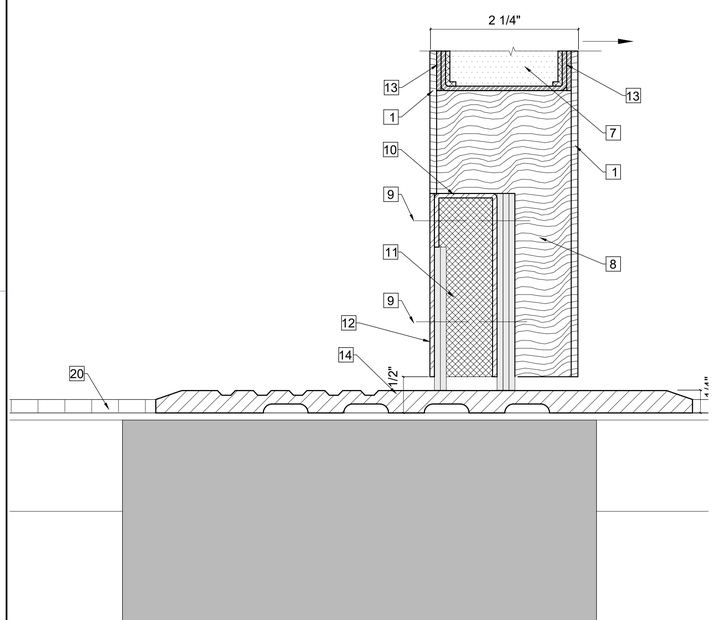

A-1 STC - 50 STEEL DOOR AND THRESHOLD DETAIL B
FULL SIZE

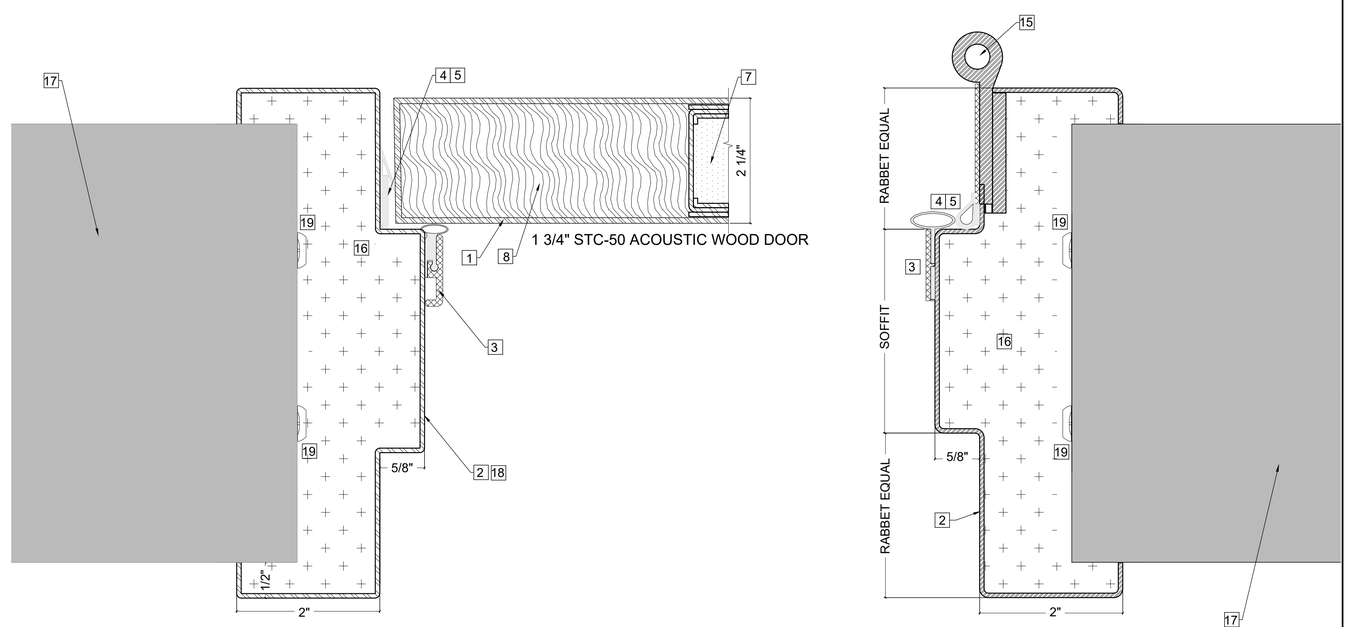

A-3 INSTALLATION OF THE STC-50 FRAME & STEEL DOOR / JAMB DETAIL C
FULL SIZE

MERIDIEN GROUP

MERIDIEN GROUP, LLC
208 SOUTH KING ST. SUITE 303
LEESBURG, VA 20175
(703) 777-8285
www.meridiengroupllc.com

CITADEL
ARCHITECTURE | HISTORIC PRESERVATION | PLANNING | DESIGN

CERTIFICATIONS

KEY PLAN

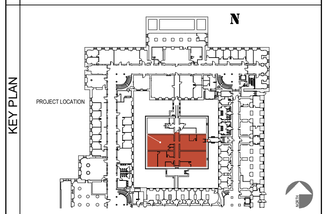

REVISION NOTES

MARK	DATE	DESCRIPTION

GRAPHIC SCALE

3" =1'-0"
CAUTION: IF THIS DRAWING IS A REDUCTION THIS GRAPHIC SCALE MUST BE USED 0" 4" 8"

CONTRACTORS	A/E CON. NO.	
	A/E TASK NO.	
	CONS. CONTR	
	CONS. WORK	
	PRIME A/E	MERIDIEN GROUP / CITADEL DCA
	SUB A/E	
BUILDING	NAME	
	STREET	
	CITY/ST./ZIP	WASHINGTON, DC
	BUILDING NO.	DC-
	OTHER	
	BUILDING NOs.	
	FACILITY CODE	
PROJECT	PROJECT TITLE	FEDERAL OFFICE BUILDING MT 1125 OFFICE RENOVATION
	PROJECT DESCRIPTION	RENOVATION OF FIRST FLOOR SUITE AND UPGRADE SECURITY
	PROJECT NO.	MT1125_26_005
	GSA PM	BARBARA CHOATE
	SUBMISSION	100% SUBMISSION REV-3
	SUB. DATE	15 JUNE 2026
DRAWING	DRAWING TITLE	OPENING 1505D DOOR AND HEADER DETAILS
	FILE NAME	
	FLOOR NO.	1ST FLOOR
	DRAWN BY	AGF DATE DRAFTED: 04/24/2026
	CHECKED BY	LSP SHEET SIZE: 24 x 36
	DRAWING NO.	A- 505

DISCIPLINE	SHEET TYPE	SEQUENCE
SHEET	14 OF	28

FINISH NOTES

GENERAL

1. ALL FINISHES SHALL BE APPLIED IN CONFORMANCE WITH THE MANUFACTURER'S RECOMMENDATIONS AND INSTRUCTIONS. A COPY OF THE RECOMMENDATIONS AND INSTRUCTIONS SHALL BE SUBMITTED TO THE DESIGNER PRIOR TO THE INSTALLATION OF MATERIALS.
2. INSPECT, PATCH AND REPAIR AS NECESSARY ALL WALL CONSTRUCTION AND SURFACES TO RECEIVE NEW FINISHES. PREPARE FOR INSTALLATION OF FINISHES IN ACCORDANCE WITH MANUFACTURER'S SPECIFICATIONS AND RECOMMENDATIONS.
3. UNLESS OTHERWISE NOTED, ALL PAINT, PAINTING AND PRIMING FOR WALL COVERINGS ARE TO BE FURNISHED AND INSTALLED BY THE CONTRACTOR.
4. PAINT ALL UNFINISHED MATERIALS, GRILLES, REGISTERS, ETC TO MATCH ADJACENT WALLS. MATERIALS WITH A NATURAL FINISH, SUCH AS ANODIZED ALUMINUM, SHALL BE LEFT IN THEIR NATURAL FINISH UNLESS OTHERWISE NOTED BY THE CONSTRUCTION DOCUMENTS.
5. APPLY ONE PRIMER COAT AND TWO FINISH COATS ON ALL SURFACES TO BE PAINTED. (LEVEL 4)
6. PREPARE FLOOR FOR INSTALLATION OF FINISHES IN ACCORDANCE WITH THE MANUFACTURER'S SPECIFICATIONS AND RECOMMENDATIONS. REMOVE ALL FOREIGN MATTER, GREASE, WAX, PAINT, OIL, ADHESIVES, DIRT, ETC. CUT OFF ANY PROTRUDING OBJECTS AND GRIND SMOOTH TO LEVEL WITH THE FLOOR SURFACE.
7. LEVEL ALL FLOOR SURFACES WITH A CEMENTITIOUS, SELF-LEVELING COMPOUND SIMILAR TO ARDEX K15. MINIMUM THICKNESS = 1/8". SEE SPECS.
8. VERIFY THE LOCATION OF ALL EXISTING FLOOR PENETRATIONS AND FILL WITH FIRE SAFE MATERIAL AND COMPOUND TO LEVEL WITH EXISTING FINISH FLOOR AS REQUIRED FOR 2 HOUR FIRE SEPARATION.
9. INSPECT FLOOR CONSTRUCTION AND SURFACES TO RECEIVE NEW FINISHES AND PROMPTLY NOTIFY THE ARCHITECT OF ANY DEFECTS IN THE SUBSTRATE THAT AFFECT THE WORK SO THAT THEY MAY BE CORRECTED BEFORE THE START OF WORK.
10. INSTALL FLOORING MATERIALS WITHIN THE ALLOWABLE TEMPERATURE RANGE AS STATED BY THE MANUFACTURER'S INSTALLATION INSTRUCTIONS. ALL FLOORING MATERIAL SHALL BE DELIVERED TO THE SITE IN TIME TO ACCLIMATE TO CONDITIONS PRIOR TO INSTALLATION. SUBMIT A COPY OF THE INSTALLATION INSTRUCTIONS TO THE ARCHITECT AND THE OWNER.
11. ALL CHANGES IN FLOOR MATERIAL AND COLORS SHALL OCCUR AT THE CENTERLINE OF DOORWAYS UNLESS OTHERWISE NOTED.
12. WHERE ELECTRICAL WORK IS SPECIFIED, LAMPS AND FIXTURES SHALL BE PROVIDED BY THE ELECTRICAL CONTRACTOR, AS WELL AS CUTOUTS FOR SWITCHES, OUTLETS AND WIRING DEVICES FOR SAME, AS REQUIRED.
13. DURING PROGRESS OF WORK MAINTAIN PREMISES FREE OF NECESSARY ACCUMULATION OF TOOLS, EQUIPMENT, SURPLUS MATERIALS, AND DEBRIS.
14. ALL INTERIOR ROOMS AND ENCLOSED SPACES FINISHES SHALL HAVE A MIN. CLASS "C" RATING WITH A FLAME SPREAD 76-200, SMOKE DEVELOPED 0-450, IN ACCORDANCE WITH THE 2024 IBC-CHAPTER 8 (INTERIOR FINISHES).

PAINT

1. CONTRACTOR TO FURNISH ALL MATERIAL, EQUIPMENT AND SERVICES NECESSARY FOR AND INCIDENTAL TO THE PAINTING AND APPLICATION COMPLETE OF ALL FIELD PAINTING SYSTEMS. THE TERM "PAINT" INCLUDES PAINT, ENAMELS, SEALERS, FILLERS, AND OTHER TYPES OF COATINGS WHETHER USED AS PRIMERS OR IMMEDIATE AND FINISH COATS.
2. CONTRACTOR TO EXAMINE THE CONTRACT DRAWINGS & SPECIFICATIONS AND THOROUGHLY FAMILIARIZE HIMSELF W/ ALL PROVISIONS REGARDING REQUIRED PAINTING OF WORK.
3. EXAMINE SURFACES SCHEDULED TO RECEIVE PAINT AND FINISHES FOR CONDITIONS THAT WILL ADVERSELY AFFECT EXECUTION THROUGH PREPARATORY WORK.
4. CLEAN ALL SURFACES TO BE PAINTED AS REQUIRED TO REMOVE DUST AND DIRT. SAND AS NECESSARY WALL SURFACES.
5. DO NOT PROCEED WITH SURFACE PREPARATION OR COATING APPLICATIONS UNTIL CONDITIONS ARE SUITABLE. REPORT ANY CONDITIONS THAT MAY POTENTIALLY AFFECT PROPER APPLICATION.
6. BEFORE APPLYING SUCCEEDING COATS, PRIMERS AND UNDERCOATS SHALL BE COMPLETELY INTEGRAL AND SHALL PERFORM THE FUNCTION FOR WHICH THEY ARE SPECIFIED. PROPERLY PREPARE AND TOUCH UP ALL SCRATCHES, ABRASIONS OR OTHER DISFIGUREMENTS AND REMOVE ANY FOREIGN MATTER BEFORE PROCEEDING WITH THE FOLLOWING COAT. ALL SPOT-PRIMING OR SPOT-COATING SHALL BE FEATHER EDGED INTO ADJACENT COATINGS TO PRODUCE A SMOOTH AND LEVEL SURFACE.
7. REMOVE OR PROTECT HARDWARE, PLATES, TRIM FOR MECHANICAL WORK, LIGHTING FIXTURES AND REPLACE AND RECONNECT. REPLACE ELECTRICAL PLATES, HARDWARE, LIGHT FIXTURE TRIM, AND FITTINGS REMOVED PRIOR TO FINISHING.
8. DISCONNECT EQUIPMENT ADJACENT TO WALLS, WHERE NECESSARY, AND MOVE TO PERMIT PAINTING OF TO PROPERLY PREPARE SURFACES TO RECEIVE PAINT
9. COR WILL PROVIDE THE CONTRACTOR W/ PAINT CHIPS, IF REQUIRED, FOR VERIFICATION.
10. ALL PAINT SHALL BE APPLIED IN ACCORDANCE WITH MANUFACTURER'S SPECIFICATIONS FOR THE PARTICULAR SURFACE.
11. SHELLAC AND SPOT PRIME WITH INDUSTRY ACCEPTED "STAIN KILLERS" ANY MARKS WHICH MAY BLEED THROUGH SURFACE FINISHES.
12. ALL METAL SURFACES SHALL BE PROPERLY PREPARED PRIOR TO THE APPLICATION OF PAINT.
13. ALL PAINT FINISHES OF METAL PARTS OF FRAME, DOORS, PERIMETER ENCLOSURES, ETC. SHALL BE SEMI-GLOSS UNLESS OTHERWISE NOTED.
14. ALL DOORS SHALL RECEIVE SAME FINISH ON BOTH SIDES UNLESS OTHERWISE NOTED.
15. LABEL EACH CONTAINER WITH COLOR, ROOM LOCATIONS & PRODUCT DESCRIPTION IN ADDITION TO THE MANUFACTURER'S LABEL.
16. REPAIR ALL SURFACE DEFECTS IN GYPSUM DRYWALL JOINT FINISHING COMPOUND OR SPACKLING COMPOUND FILLED OUT FLUSH AND SANDED SMOOTH. CLEAN ALL SURFACES AND TAPE JOINTS OF DUST, DIRT AND OTHER CONTAMINANTS AND BE SURE THEY ARE THOROUGHLY DRY BEFORE APPLYING PAINT.
17. REPAIR DAMAGE TO OTHER SURFACES CAUSED BY WORK OF THIS SECTION.
18. REMOVE EMPTY PAINT CONTAINERS FROM THE WORK SITE. PLACE PAINT OR SOLVENT SOAKED RAGS, WASTE, OR OTHER MATERIALS WHICH MIGHT CONSTITUTE A FIRE HAZARD IN METAL CONTAINERS AND REMOVE FROM PREMISES AT THE END OF EACH DAY'S WORK TAKE EVERY PRECAUTION TO AVOID DAMAGE BY FIRE.
19. AS WORK PROCEEDS, PROMPTLY REMOVE PAINT WHERE SPILLED, SPLASHED, OR SPLATTERED.
20. ADEQUATE LIGHTING MUST BE AVAILABLE PRIOR TO THE APPLICATION OF ANY PAINT COATING TO APPROXIMATE 80 FOOT CANDLES MEASURED MID-HEIGHT AT SUITABLE SURFACE.
21. APPLY PAINT AND ENAMEL W/ SUITABLE BRUSHES, ROLLERS OR SPRAY EQUIPMENT WHICH HAS BEEN KEPT CLEAN, FREE FROM CONTAMINATION AND SUITABLE FOR FINISH REQUIRED.
22. RATE OF APPLICATION OF COATING SHALL NOT EXCEED THAT AS RECOMMENDED BY THE PAINT MANUFACTURER FOR THE PURPOSE AND SURFACE INVOLVED.
23. COMPLY FOR REQUIRED DRYING TIME BETWEEN COATS AS DIRECTED BY MANUFACTURER.
24. SAND DUST BETWEEN EACH COAT TO REMOVE DEFECTS VISIBLE FROM 5 FEET. FINISH COATS SHALL BE SMOOTH, FREE FROM DUST MARKS, STREAKS, LAPS, SAGS, SKIPS, ETC
25. SHOP PRIMED STEEL SURFACES SAND AND SCRAPE TO REMOVE LOOSE PRIMER AND RUST. FEATHER EDGES TO MAKE TOUCH UP PATCHES INCONSPICUOUS. CLEAN SURFACES WITH SOLVENT.
26. SEAL TOP AND BOTTOM EDGES OF DOORS SCHEDULED FOR PAINTING WITH PRIMER. PROTECT THE WORK OF OTHER TRADES AGAINST DAMAGE OR INJURY BY USE OF SUITABLE COVERINGS DURING THE PROGRESS OF THE PAINTING AND FINISHING WORK.
27. DO NOT APPLY ADDITIONAL PAINT COATS UNTIL COMPLETED SURFACE HAS BEEN INSPECTED AND APPROVED BY THE COR. ONLY INSPECTED COATS OF PAINT WILL BE CONSIDERED IN DETERMINING NUMBER OF COATS APPLIED.
28. MAKE EDGES OF PAINT ADJOINING OTHER MATERIAL OR COLORS CLEAN AND SHARP WITH NO OVERLAPPING.
29. CHANGE COLORS AT DOOR STOP CORNERS WHERE COLORS DIFFER BETWEEN ADJOINING SPACES OR ROOMS AND WHERE DOOR FRAMES MATCH WALL COLORS.
30. REFINISH WHOLE WALL WHERE PORTION OF FINISH HAS BEEN DAMAGED OR IS NOT ACCEPTABLE.
31. PAINT EXPOSED SIDES AND EDGES OF PLYWOOD BACKBOARDS FOR ELECTRICAL & TELEPHONE EQUIPMENT BEFORE INSTALLING EQUIPMENT.
32. SAMPLES OF ALL FINISH COLORS SPECIFIED SHALL BE SUBMITTED FOR APPROVAL TO COR PRIOR TO THE COMMENCEMENT OF WORK
33. THE CONTRACTOR SHALL BE HELD RESPONSIBLE FOR THE FINISHED APPEARANCE AND SATISFACTORY COMPLETION OF HIS WORK, AND THEREFORE, HE SHALL NOT COMMENCE ANY PAINTING UNTIL SURFACES TO BE FINISHED ARE IN PROPER CONDITION IN EVERY RESPECT.
34. CONFORM TO APPLICABLE STATE, COUNTY, AND CITY CODES FOR FLAME/FUEL/SMOKE RATING REQUIREMENTS FOR FINISHES.

FLOOR COVERINGS / CARPET

1. FLASH PATCH ALL AREAS WHERE FLOOR IS NOT LEVEL OR TRUE AND ALL AREAS SCHEDULED TO RECEIVE A NEW FLOOR COVERING, PRIOR TO FLOOR INSTALLATION.
2. INSTALL FLOOR COVERING IN ACCORDANCE WITH MANUFACTURER'S INSTRUCTIONS.
3. CARPET CONTRACTOR SHALL INSPECT AND ACCEPT CONDITIONS OF FLOORS AND WALLS PRIOR TO INSTALLING CARPET OR APPLYING BASE TO DETERMINE THAT SURFACES ARE SATISFACTORY. A SATISFACTORY SURFACE IS DEFINED AS ONE THAT IS SMOOTH AND FREE OF HOLES, CRACKS, RIDGES, BUMPS, AND OTHER DEFECTS IMPAIRING PERFORMANCE OR APPEARANCE.
4. ALL INSTALLED CARPET SHALL COMPLY WITH SECTION 804 OF THE IEBC. IT SHALL BE OF CLASS I OR CLASS II MATERIALS IN ACCORDANCE W/ NFPA 253. CLASS I - 0.45 WATTS/CM² OR GREATER, CLASS II - 0.22 WATTS/CM² OR GREATER.
5. SUBMIT SHOP DRAWINGS BEFORE PROCEEDING W/ THE WORK. SHOW CARPET LAYOUT AND DIAGRAM INDICATING CARPET DIRECTION.
6. WHERE CARPET TRANSITIONS TO OTHER FLOOR COVERINGS, THE CARPET EDGES ARE REQUIRED TO BE PROTECTED / COVERED WITH APPROPRIATE TRANSITION MOLDINGS. THE EDGE OF THE HARD SURFACE FLOORING SHOULD NOT EXCEED A MAX OF 1/16" HIGHER THAN THE TOTAL CARPET THICKNESS WHERE NO TRANSITION MOLDING EXISTS.
7. WHEN VINYL OR RUBBER WALL BASE IS USED IN A DIRECT GLUE OR DOUBLE GLUE CARPET INSTALLATION, COVE BASE OR BASE-WITH-TOE IS RECOMMENDED.
8. CARPET TILE DEFINED AS VARIOUS SHAPES AND SIZES OF CARPET PRECUT DURING MANUFACTURING WITH APPLIED BACKINGS. DUE TO THE VARIATION IN TILE SIZE, SHAPE, BACKING AND INSTALLATION METHODS (MONOLITHIC, ASHLAR, QUARTER TURN, ETC.) FOLLOW THE CARPET MANUFACTURER'S RECOMMENDATIONS.
09. CARPET TILES MUST BE INSTALLED STRAIGHT AND SQUARE.
10. CARPET TILES SHOULD BE INSTALLED USING A THIN FILM OF PRESSURE- SENSITIVE ADHESIVE AND ALLOWING IT TO COMPLETELY DRY. THE ADHESIVE SELECTED MUST PREVENT LATERAL MOVEMENT OF CARPET TILES, BUT ALLOW FOR EASY REMOVAL / REPLACEMENT OF TILES. DUE TO VARYING CARPET TILE BACKING. THE ADHESIVE SELECTION MUST FOLLOW MANUFACTURER RECOMMENDATIONS. IF ROLLING IS REQUIRED TO PRESS THE TILE INTO THE ADHESIVE, REFER TO MANUFACTURER RECOMMENDATIONS FOR ROLLER WEIGHT.
11. IN ORDER TO PREVENT ADHESION ISSUES OR CONTAMINATION, THE OLD ADHESIVE RESIDUE MUST BE REMOVED AND ENCAPSULATED PRIOR TO APPLICATION OF NEW ADHESIVE.
12. TILE IN THE COMPLETED INSTALLATION SHOULD BE TIGHT BUT NOT COMPRESSED. TO ENSURE PROPER SPACING WHEN INSTALLING CARPET TILE, MEASURE THE DISTANCE COVERED BY 10 TILES INSTALLED ON THE FLOOR WITH NO VISIBLE GAPS, PEAKS OR OVERLAPS. THE MEASUREMENT SHOULD BE EQUAL TO 10 TIMES THE TILE SIZE +/- 1/4 INCH UNLESS OTHERWISE STATED IN THE MANUFACTURER SPECIFICATIONS. THIS MEASUREMENT IS AN INDICATION OF CORRECT PLACEMENT OF TILES TO PREVENT COMPRESSION OR GAPPING BETWEEN TILES. NO YARN SHOULD BE TRAPPED BETWEEN TILES

MILLWORK

1. MATERIAL USED AS INTERIOR TRIM SHALL HAVE A CLASS C FLAME SPREAD INDEX AND SMOKE-DEVELOPED INDEX. COMBUSTIBLE TRIM, SHALL NOT EXCEED 10% OF THE AGGREGATE WALL OR CEILING IN WHICH IT IS LOCATED, IN ACCORDANCE WITH SECTION 805.5 OF THE 2024 IBC.
2. MILLWORK CONTRACTOR SHALL PROPERLY PREPARE ALL SURFACES TO RECEIVE SPECIFIED FINISHES. PAINTED SURFACES SHALL BE PROPERLY SEALED, SANDED AND SHOP PRIMED TO RECEIVE FINISH COAT BY CABINET CONTRACTOR.
3. MILLWORK CONTRACTOR SHALL SUBMIT SHOP DRAWINGS FOR APPROVAL PRIOR TO ANY FABRICATION

INSTALLATION TOLERANCES

1. VARIATION FROM PLUMB: FOR VERTICAL JOINTS, EXTERNAL CORNERS, AND OTHER CONSPICUOUS LINES,DO NOT EXCEED 1/8 INCH IN 8 FEET.
2. VARIATION IN LEVEL: FOR HORIZONTAL JOINTS AND OTHER CONSPICUOUS LINES,DO NOT EXCEED 1/8 INCH IN 20 FEET, OR 1/2 INCH MAXIMUM.
3. VARIATION IN SURFACE PLANE OF FLOORING: DO NOT EXCEED 1/8 INCH IN 10 FEET FROM LEVEL OR SLOPE INDICATED WHEN TESTED WITH A 10-FOOT STRAIGHT EDGE.
4. VARIATION IN PLANE BETWEEN ADJACENT UNITS (LIPPING): DO NOT EXCEED 1/64 INCH BETWEEN FACES OF ADJACENT UNITS AS MEASURED FROM A STRAIGHT EDGE PARALLEL TO TILED SURFACE.
5. VARIATION IN JOINT WIDTH: DO NOT VARY JOINT THICKNESS MORE THAN 1/16 INCH OR ONE-FOURTH OF NOMINAL JOINT WIDTH, WHICHEVER IS LESS.
6. REMOVE AND REPLACE MATERIAL THAT IS STAINED OR OTHER-WISE DAMAGED THAT DOES NOT MATCH ADJOINING TILE. PROVIDE NEW MATCHING UNITS, INSTALLED AS SPECIFIED AND IN A MANNER TO ELIMINATE EVIDENCE OF REPLACEMENT.

FINAL CLEANING

- PROVIDE FINAL CLEANING OF THE WORK, AT TIME INDICATED, CONSISTING OF CLEANING EACH SURFACE OR UNIT OF WORK TO NORMAL "CLEAN" CONDITIONS EXPECT FOR A FIRST CLASS BUILDING CLEANING MAINTENANCE PROGRAM. THE FOLLOWING ARE EXAMPLES, BUT NOT IN ANY WAY A LIMITATION, OF CLEANING LEVELS REQUIRED:
- REMOVE LABELS WHICH ARE NOT REQUIRED AS PERMANENT LABELS.
- CLEAN TRANSPARENT MATERIALS, INCLUDING MIRRORS AND WINDOW/DOOR GLASS, TO A POLISHED CONDITIONS, REMOVING SUBSTANCES WHICH ARE NOTICEABLE AS VISION-OBSCURING MATERIALS.
- CLEAN EXPOSED EXTERIOR AND INTERIOR HARD-SURFACE FINISHES TO A DIRT-FREE CONDITION, FREE OF DUST, STAINS, FILMS AND SIMILAR NOTICEABLE DISTRACTING SUBSTANCES. RESTORE REFLECTIVE SURFACES TO ORIGINAL REFLECTIVE CONDITION.
- REMOVE DEBRIS AND SURFACE DUST FROM LIMITED-ACCESS SPACES INCLUDING PLENUMS, AND SIMILAR SPACES.
- VACUUM CLEAN CARPETED SURFACES AND SIMILAR SOFT SURFACES.
- CLEAN LIGHT FIXTURES, LAMPS AND DIFFUSERS SO AS TO FUNCTION WITH FULL EFFICIENCY.

ROOM FINISH SCHEDULE

CODE	TYPE		MATERIAL	MANUFACTURER	NUMBER	NAME	STYLE / COLOR	SIZE / APPLICATION	DESCRIPTION/REMARKS	
P-1	PAINT	EXISTING WALLS	AURA Interior Paint- EGGSHELL (524)	BENJAMIN MOORE	HC- 93	CARRINGTON BEIGE*	EGGSHELL	PRIMER (2) FINISH COATS	MILDEW RESISTANT PAINT AND PRIMER TOGETHER ZERO VOC, LOW ODOR	
		NEW WALLS		SHERWIN WILLIAMS	SW-6127	IVOIRE*				
P-2		EXISTING & NEW DOOR LEAVES EXISTING & NEW DOOR FRAMES BASEBOARD AND SHOE ANY OTHER ELEMENTS CURRENTLY PAINTED	AURA Interior Paint- SEMI-GLOSS (N528)	BENJAMIN MOORE	OC-17	PURE WHITE*	SEMI GLOSS	PRIMER: SELF PRIMING or Fresh Start® High-Hiding All Purpose Primer (046) or Fresh Start Under-coater and Primer/Sealer (032) (2) FINISH COATS SAND BETWEEN COATS	• Cleanup: Soap and Water • Resin Type: Proprietary 100% Acrylic • MPI Rating: 054, 141 • VOC Level: 2.8 • CDPH Emissions Certified	• Coverage per Gallon at Recom. Film Thickness 400 – 450 Sq. Ft. • Dry Time @ 77 °F (25 °C) @ 50% RH To Touch 1 Hour | To Recoat 1 Hour • Pigment Type Titanium Dioxide
				SHERWIN WILLIAMS	SW-7005	PURE WHITE*				
B-1	MILL WORK	WALL BASEBOARD	POPLAR CLEAR	3/4" x 4" FLAT (MATCH EXISTING)					3/4" POPLAR CLEAR / PRIME & PAINTED. PRIME BOTH SIDES	
SH-1		SHOE	POPLAR CLEAR	1/2" x 4" FLAT (MATCH EXISTING)					POPLAR CLEAR / PAINTED	
C-1	FLOORING	CARPET TILE		SHAW INDUSTRIES INC	5T007 / SCULPT / EW24		STYLE: 314110 COLOR: 83761 CLAY	24" x 24" / QUARTER TURN	• GLUE DOWN INSTALLATION • SCRAPE & REMOVE GLUE AND DEBRIS PRIOR TO INSTALLATION • LEVEL FLOOR PRIOR TO INSTALLATION	
CG-1	CEILING	SUSPENDED CEILING GRID	HOT DIPPED GALVANIZED STEEL BAKED POLYESTER PAINT OR POWDER COATED	USG DONN BRAND	DXF / DXL 9 / 16		WHITE	FACE DIMENSION: 15/16" PROFILE: EXPOSED TEE	• CROSS TEE/MAIN BEAM INTERFACE: FLUSH FIT • END DETAIL: MAIN BEAM: STAKED-ON CLIP CROSS TEE: STAKED-ON HOOK CLIP	
AT-1		ACOUSTIC CEILING TILE	FIBERGLASS w/ ACOUSTICALLY TRANSPARENT MEMBRANE w/ FACTORY-APPLIED LATEX PAINT	USG HALCYON	USG HALCYON		98221	24" x 24" x 1"	• EDGE: SQUARE TEGULAR 15/16 • CEILING PANELS w/ BIOBLOCK RESIST THE GROWTH OF MOLD AND MILDEW.	

* COLOR MUST MATCH BUILDING STANDARD COLORS

MERIDIEN GROUP

MERIDIEN GROUP, LLC
208 SOUTH KING ST. SUITE 303
LEESBURG, VA 20175
(703) 777-8285
www.meridiengroupllc.com

DCA CITADEL
ARCHITECTURE | HISTORIC PRESERVATION | PLANNING | DESIGN

CERTIFICATIONS

KEY PLAN

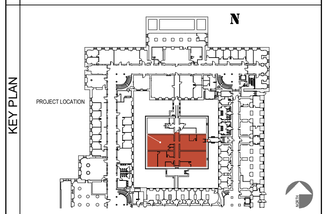

REVISION NOTES

MARK	DATE	DESCRIPTION

GRAPHIC SCALE

CAUTION: IF THIS DRAWING IS A REDUCTION THIS GRAPHIC SCALE MUST BE USED

CAUTION: IF THIS DRAWING IS A REDUCTION THIS GRAPHIC SCALE MUST BE USED

CONTRACTORS	
A/E CON. NO.	
A/E TASK NO.	
CONS. CONTR	
CONS. WORK	
PRIME A/E	MERIDIEN GROUP / CITADEL DCA
SUB A/E	
BUILDING	
NAME	
STREET	
CITY/ST./ZIP	WASHINGTON, DC
BUILDING NO.	DC-
OTHER	
BUILDING NOs.	
FACILITY CODE	
PROJECT	
PROJECT TITLE	FEDERAL OFFICE BUILDING MT 1125 OFFICE RENOVATION
PROJECT DESCRIPTION	RENOVATION OF FIRST FLOOR SUITE AND UPGRADE SECURITY
PROJECT NO.	MT1125_26_005
GSA PM	BARBARA CHOATE
SUBMISSION	100% SUBMISSION REV-3
SUB. DATE	15 JUNE 2026
DRAWING	
DRAWING TITLE	FINISHES NOTES AND SCHEDULE
FILE NAME	
FLOOR NO.	1ST FLOOR
DRAWN BY	AGF — DATE DRAFTED: 04/24/2026
CHECKED BY	LSP — SHEET SIZE: 24 x 36
DRAWING NO.	A-601
DISCIPLINE	SHEET TYPE — SEQUENCE
SHEET	15 OF 28

ROOM FINISHES SCHEDULE

NO.	ROOM	GENERAL CLASSIFICATION	WALL		FLOOR	BASE		CASING / FRAME			DOOR LEAF			CEILING	
			EXISTING	NEW		NEW		EXTG DOOR	NEW DOOR		EXISTING	NEW		NEW FINISH	HEIGHT
						TYPE	FINISH	FINISH	TYPE	FINISH	FINISH	TYPE	FINISH		
1125	VESTIBULE		P-1	P-1		B-1 + SH-1	P-2								MATCH EXISTING
1503	OPEN OFFICE	STC-50 / NIC 45	P-1	—	C-1	B-1 + SH-1	P-2	P-2	—	—	P-2	—	—	CG1 / AT-1	MATCH EXISTING
1503 A	EQUIPMENT CLOSET	STC-50 / NIC 45	P-1	—	C-1	B-1 + SH-1	P-2	P-2	—	—	P-2	—	—		MATCH EXISTING
1503 B	EQUIPMENT CLOSET	STC-50 / NIC 45	P-1	—	C-1	B-1 + SH-1	P-2	P-2	—	—	P-2	—	—		MATCH EXISTING
1504	OPEN OFFICE	STC-50 / NIC 45	P-1	—	C-1	B-1 + SH-1	P-2	P-2	—	—	P-2	—	—	CG1 / AT-1	MATCH EXISTING
1504 B	OFFICE	STC-50 / NIC 45	P-1	—	C-1	B-1 + SH-1	P-2	P-2	—	—	P-2	—	—	CG1 / AT-1	MATCH EXISTING
1505	ENTRY HALL	STC-50 / NIC 45	P-1	—	C-1	B-1 + SH-1	P-2	P-2	—	—	P-2	—	—	CG1 / AT-1	MATCH EXISTING
1505 A	OFFICE	STC-50 / NIC 45	P-1	—	C-1	B-1 + SH-1	P-2	P-2	—	—	P-2	—	—	CG1 / AT-1	MATCH EXISTING
1505 B	CONFERENCE ROOM	STC-50 / NIC 45	P-1	—	C-1	B-1 + SH-1	P-2	P-2	—	—	P-2	—	—	CG1 / AT-1	MATCH EXISTING
1505 C	OFFICE	STC-50 / NIC 45	P-1	—	C-1	B-1 + SH-1	P-2	P-2	—	—	P-2	—	—	CG1 / AT-1	MATCH EXISTING
1505 D	CONFERENCE ROOM	STC-50 / NIC 45	P-1	—	C-1	B-1 + SH-1	P-2	P-2	F-2	P-2	P-2	B	P-2	CG1 / AT-1	MATCH EXISTING
1506	OPEN OFFICE	STC-50 / NIC 45	P-1	—	C-1	B-1 + SH-1	P-2	P-2	—	—	P-2	—	—	CG1 / AT-1	MATCH EXISTING
1506 K	OFFICE	STC-50 / NIC 45	P-1	—	C-1	B-1 + SH-1	P-2	P-2	—	—	P-2	—	—	CG1 / AT-1	MATCH EXISTING
1507	CORRIDOR	STC-50 / NIC 45	P-1	—	C-1	B-1 + SH-1	P-2	P-2	F-1	P-2	P-2	A	P-2	NO ACT / PAINT BLACK TO MATCH EXISTING	9'-5" (TO DECK)

DOOR SCHEDULE

NO.	ROOM	STC-50 / FIRE RATING FRAME & LEAF	OPENING R.O.	WALL THICKNESS	FRAME								LEAF						HARDWARE	CARD READER
					TYPE	H	W	T	JAMBS / HEAD	MATERIAL	STOP	FINISH	TYPE	H	W	T	MATERIAL	FINISH		
1507	SUITE ENTRY/ CORRIDOR 1507	STC-50 / RF SHIELD 60 db READY 90 MIN FR	43" x 7'-0"	8 1/2" V.I.F.	F-1	86"	44 3/4"		9 1/2" V.I.F.	H.M.	RABBETS	P-2	A	6'-10"	3'- 4"	1 7/8"	HM W/ ACOUSTIC CORE	P-2	SET 1	EXISTING
1505 D	CONFERENCE ROOM 1505 D	STC-50 / LEVEL 4	EXISTING V.I.F.	EXISTING V.I.F.	F-2	MATCH EXISTING V.I.F.				H.M.	RABBETS	P-2	B	MATCH EXISTING V.I.F.			WOOD W/ ACOUSTIC CORE	P-2	SET 2	YES

H. M. = HOLLOW METAL

HARDWARE SCHEDULE

HARDWARE SET TYPE 1

	DESCRIPTION	FINISH / COLOR	MANUFACTURER
HINGES 1 1/2 PAIR	CAM-LIFT 41/2 x 4 1/2	SOS-CL-500	
ELECTRIFIED MORTISE LOCKSET	ELECTRIFIED ML 20900 ML 20906 x SEC (FAIL SECURE)		CORBIN RUSSWIN
LEVER SET	ELECTRIFIED ML 20900 CITATION (CSB/CSF)	BRIGHT BRASS	CORBIN RUSSWIN
SECURITY LOCK	CDX-10		KABA MAS
EXIT DEVICE	98 / 99 - SERIES FIRE EXIT DEVICE / ABA COMPLIANT		VON DUPRIN
POWER TRANSFER	CEPT-10		
CYLINDER CORE & IC CORE HOUSING	LARGE FORMAT IC CORE (TREASURY SPEC)		MEDECO
BALANCED MAGNETIC SWITCH	HSS-L2D-000 BALANCED MAGNETIC SWITCH		MAGNASPHERE
CARD READER	EXISTING		
CLOSER (PUSH SIDE)	8916 AF89P	689	LCN
SILENCERS	608	GRAY	ROCKWOOD
DOOR STOP	441 H	CAST BRASS	ROCKWOOD

HARDWARE SET TYPE 2

	DESCRIPTION	FINISH / COLOR	MANUFACTURER
HINGES 1 1/2 PAIR	CAM-LIFT 41/2 x 4 1/2	SOS-CL-500	
ELECTRIFIED MORTISE LOCKSET	ELECTRIFIED ML 20900 ML 20906 x SEC (FAIL SECURE)		CORBIN RUSSWIN
LEVER SET	ELECTRIFIED ML 20900 CITATION (CSB/CSF)	BRIGHT BRASS	CORBIN RUSSWIN
EXIT DEVICE	ABA COMPLIANT RELEASE LEVER INTERIOR		VON DUPRIN
POWER TRANSFER	CEPT-10		
CYLINDER CORE & IC CORE HOUSING	LARGE FORMAT IC CORE (TREASURY SPEC)		MEDECO
BALANCED MAGNETIC SWITCH	HSS-L2D-000 BALANCED MAGNETIC SWITCH		MAGNASPHERE
CARD READER	EXISTING		
CLOSER (PUSH SIDE)	8916 AF89P	689	LCN
SILENCERS	608	GRAY	ROCKWOOD
DOOR STOP	441 H	CAST BRASS	ROCKWOOD

MERIDIEN GROUP

MERIDIEN GROUP, LLC
208 SOUTH KING ST. SUITE 303
LEESBURG, VA 20175
(703) 777-8285
www.meridiengroupllc.com

DCA CITADEL
ARCHITECTURE | HISTORIC PRESERVATION | PLANNING | DESIGN

CERTIFICATIONS

KEY PLAN

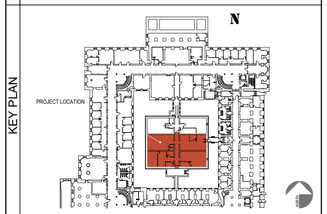

REVISION NOTES

MARK	DATE	DESCRIPTION

GRAPHIC SCALE

CAUTION: IF THIS DRAWING IS A REDUCTION THIS GRAPHIC SCALE MUST BE USED

CAUTION: IF THIS DRAWING IS A REDUCTION THIS GRAPHIC SCALE MUST BE USED

CONTRACTORS	A/E CON. NO.	
	A/E TASK NO.	
	CONS. CONTR	
	CONS. WORK	
	PRIME A/E	MERIDIEN GROUP / CITADEL DCA
	SUB A/E	
BUILDING	NAME	
	STREET	
	CITY/ST./ZIP	WASHINGTON, DC
	BUILDING NO.	DC-
	OTHER	
	BUILDING NOs.	
	FACILITY CODE	
PROJECT	PROJECT TITLE	FEDERAL OFFICE BUILDING MT 1125 OFFICE RENOVATION
	PROJECT DESCRIPTION	RENOVATION OF FIRST FLOOR SUITE AND UPGRADE SECURITY
	PROJECT NO.	MT1125_26_005
	GSA PM	BARBARA CHOATE
	SUBMISSION	100% SUBMISSION REV-3
	SUB. DATE	15 JUNE 2026
DRAWING	DRAWING TITLE	DOOR & HARDWARE SCHEDULES + ELEVATIONS
	FILE NAME	
	FLOOR NO.	1ST FLOOR
	DRAWN BY	AGF DATE DRAFTED: 04/24/2026
	CHECKED BY	LSP SHEET SIZE: 24 x 36
	DRAWING NO.	A-602
		DISCIPLINE SHEET TYPE SEQUENCE
		SHEET 16 OF 28

DOOR ASSEMBLIES ELEVATIONS & FEATURE SUMMARY

FRAME TYPE F-1 | RF READY & STC-50 LEVEL 4 | HOLLOW METAL FRAME TO USE W/ HOLLOW METAL LEAVES

ACCEPTABLE MATERIALS AND ALTERNATES

A. STEEL SHEET: ONE OF THE FOLLOWING:

1. COLD-ROLLED STEEL SHEET CONFORMING TO ASTM A 1008, COMMERCIAL QUALITY.
2. HOT-ROLLED STEEL SHEET CONFORMING TO ASTM A 569, PICKLED AND OILED, COMMERCIAL QUALITY.

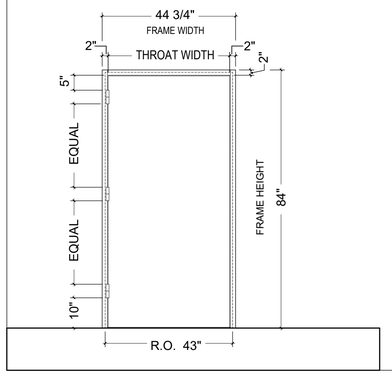

1. SPLIT FRAME (2-PIECE) FABRICATED FROM STAINLESS STEEL SHEET OR STEEL (SEE ALTERNATE), MINIMUM 14-GA.
2. FRAMES TO HAVE CONTINUOUS CONTACT FLANGE TO INTERFACE WITH RF SHIELDING MATERIAL ON WALLS AND FLOOR.
3. ANCHOR THE FRAME TO THE ABUTTING STUDS
4. THE FRAME MUST HAVE ALL VOIDS IN THE HEAD AND JAMBS PACKED W/ 6 TO 12 LB DENSITY MINERAL WOOL
5. ALL VOIDS BETWEEN WALL AND FRAME MUST BE CONTINUOUSLY CAULKED.
6. MORTISE, REINFORCE, DRILL, AND TAP FRAMES AT FACTORY FOR FULLY TEMPLATED MORTISED HARDWARE ONLY, IN ACCORDANCE W/ARCHITECT-APPROVED SHOP DRAWINGS AND SUPPLIED TEMPLATES.
7. PROVIDE REINFORCING PLATES AT SURFACE-MOUNTED OR NON-TEMPLATED HARDWARE LOCATIONS.
8. FACTORY PROVIDED HEAVY WEIGHT HINGES & 2-POINT LATCHING DEVICES FOR EACH DOOR LEAF.
9. FLOOR ANCHORS MUST BE FABRICATED OF SAME MATERIAL AS FRAME MATERIAL; MINIMUM 14 GAGE. ANCHORS MUST BE WELDED INSIDE EACH JAMB FOR FLOOR ANCHORAGE
10. FRAME SHOULD HAVE RF/STC SINGLE MAGNETIC SEALS AT HEAD AND JAMBS. USE RF FRAME BONDING TAPE
11. THE FRAME SHALL BE FACTORY MOUNTED WITH A FORMED STAINLESS-STEEL GASKET RETAINER THAT IS CONDUCTIVE WITH THE FRAME.
12. ALL EXPOSED SURFACES MUST RECEIVE ONE COAT OF RUST INHIBITIVE PRIMER WHICH MEETS ASTM B117 EXCEPT RF CONTACT POINTS, WITHOUT RUNS, SMEARS OR BARE SPOTS

FRAME TYPE F-2 | STC-50 LEVEL 4 | HOLLOW METAL FRAME TO USE W/ SOLID CORE WOOD LEAVES

ACCEPTABLE MATERIALS AND ALTERNATES

A. STEEL SHEET: ONE OF THE FOLLOWING:

1. COLD-ROLLED STEEL SHEET CONFORMING TO ASTM A 1008, COMMERCIAL QUALITY.
2. HOT-ROLLED STEEL SHEET CONFORMING TO ASTM A 569, PICKLED AND OILED, COMMERCIAL QUALITY.

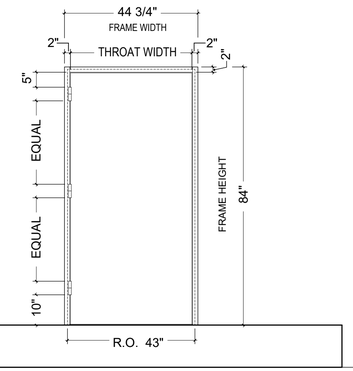

1. FULL PROFILE WELDEDFABRICATED FROM STAINLESS STEEL SHEET OR STEEL (SEE ALTERNATE), MINIMUM 14-GA. SPLIT FRAME (2-PIECE) WILL ALSO BE ACCEPTABLE
2. ANCHOR THE FRAME TO THE ABUTTING STUDS
3. THE FRAME MUST HAVE ALL VOIDS IN THE HEAD AND JAMBS PACKED W/ 6 TO 12 LB DENSITY MINERAL WOOL
4. ALL VOIDS BETWEEN WALL AND FRAME MUST BE CONTINUOUSLY CAULKED.
5. MORTISE, REINFORCE, DRILL, AND TAP FRAMES AT FACTORY FOR FULLY TEMPLATED MORTISED HARDWARE ONLY, IN ACCORDANCE W/ARCHITECT-APPROVED SHOP DRAWINGS AND SUPPLIED TEMPLATES.
6. PROVIDE REINFORCING PLATES AT SURFACE-MOUNTED OR NON-TEMPLATED HARDWARE LOCATIONS.
7. FACTORY PROVIDED HEAVY WEIGHT HINGES & 2-POINT LATCHING DEVICES FOR EACH DOOR LEAF.
8. FLOOR ANCHORS MUST BE FABRICATED OF SAME MATERIAL AS FRAME MATERIAL; MINIMUM 14 GAGE. ANCHORS MUST BE WELDED INSIDE EACH JAMB FOR FLOOR ANCHORAGE
9. FRAME SHOULD HAVE STC SINGLE MAGNETIC SEALS AT HEAD AND JAMBS.
10. THE FRAME SHALL BE FACTORY MOUNTED WITH A FORMED STAINLESS-STEEL GASKET RETAINER THAT IS CONDUCTIVE WITH THE FRAME.
11. ALL EXPOSED SURFACES MUST RECEIVE ONE COAT OF RUST INHIBITIVE PRIMER WHICH MEETS ASTM B117 EXCEPT RF CONTACT POINTS, WITHOUT RUNS, SMEARS OR BARE SPOTS

LEAF TYPE A | RF READY + STC-50 LEVEL 4 | HOLLOW METAL

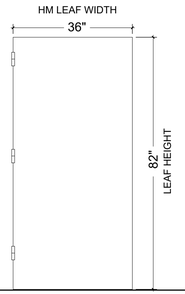

1. HOLLOW METAL DOOR 1-3/4" THICK. DOOR MATERIAL SHALL BE 14GA COLD-ROLLED STAINLESS STEEL SKIN W/ RADIO FREQUENCY AND ACOUSTICAL CORE.
2. HORIZONTAL EDGES: CLOSE TOP AND BOTTOM EDGES OF DOORS W/ CONTINUOUS STEEL CHANNELS, 16 GA. MINIMUM; SPOT-WELD CHANNELS TO BOTH DOOR FACES. PROVIDE ADDITIONAL FLUSH CLOSING CHANNEL AT TOP EDGE OF DOORS; SPOT-WELD CHANNEL TO BOTH DOOR FACES.
3. MORTISE, REINFORCE, DRILL, AND TAP DOORS AT FACTORY FOR FULLY TEMPLATED MORTISED HARDWARE ONLY, IN ACCORDANCE W/ APPROVED HARDWARE SCHEDULE & SUPPLIED TEMPLATES.
4. PROVIDE REINFORCING PLATES AT SURFACE-MOUNTED OR NON-TEMPLATED HARDWARE LOCATIONS
5. TOP AND BOTTOM CHANNELS: INVERTED, RECESSED, WELDED STEEL CHANNELS
6. INSTALL AN AUTOMATIC DOOR BOTTOM SEAL. DOOR BOTTOM: MORTISED ADJUSTABLE UNIT DESIGNED FOR CAM LIFT HINGE OPERATION
7. FACTORY INSTALLED HARDWARE: CAM-LIFT HINGES, MORTISE LOCK/EXIT DEVICE W/ KABA MAS X-10 DEVICE
8. RF SEALS ARE TO PROVIDE 40 TO 60 DB RF PROTECTION IN THE ELECTRIC FIELD, PLANE WAVE, AND MICROWAVE FIELDS IN THE FREQUENCY RANGE OF 1 KHZ TO 18 GHZ.
9. MAXIMUM DEVIATION FROM SQUARE, ALIGNMENT, TWIST AND PLUMB: +/- 1/32"
10. ALL TOOL MARKS AND SURFACE IMPERFECTIONS SHALL BE REMOVED AND EXPOSED FACES OF ALL WELDED JOINTS SHALL BE DRESSED SMOOTH.
11. ASSEMBLY SHALL BE TREATED AND COATED ON ALL ACCESSIBLE SURFACES W/ A RUST- INHIBITIVE PRIMER WHICH MEETS ASTM B117 SALT SPRAY FOR 150 HOURS, AND ASTM D1735 WATER FOG TEST FOR ORGANIC COATINGS FOR 200 HOURS. PRIMER SHALL COVER ALL SURFACES, EXCEPT RF CONTACT POINTS, WITHOUT RUNS, SMEARS OR BARE SPOTS.

LEAF TYPE B | STC-50 LEVEL 4 | SOLID CORE WOOD LEAF

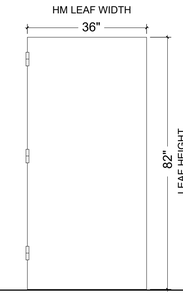

1. SOLID CORE (ACOUSTIC CORE) WOOD LEAF 2-1/4" THICK
3. VENEER: ROTARY WHITE BIRCH VENEER, MIN. THICKNESS BEFORE SANDING 1/42". ADHESIVES MUST NOT CONTAIN FORMALDEHYDE
4. MORTISE, REINFORCE, AND DRILL, DOORS AT FACTORY FOR FULLY TEMPLATED MORTISED HARDWARE ONLY, IN ACCORDANCE W/ APPROVED HARDWARE SCHEDULE & SUPPLIED TEMPLATES.
5. REINFORCE DOOR WHERE SURFACE MOUNTED HARDWARE IS REQUIRED OR NON-TEMPLATED HARDWARE LOCATIONS
6. THE DOOR PANEL SHALL HAVE HARDWOOD STILES TO MATCH WOOD FACE AND HARDWOOD RAILS
7. TOP AND BOTTOM RAILS TO BE FACTORY SEALED WITH WOOD SEALER
8. FACTORY DOOR PRIMER. P-2 FINISH
9. INSTALL AN AUTOMATIC DOOR BOTTOM SEAL. DOOR BOTTOM: MORTISED ADJUSTABLE UNIT DESIGNED FOR CAM LIFT HINGE OPERATION
10. MAXIMUM DEVIATION FROM SQUARE, ALIGNMENT, TWIST AND PLUMB: +/- 1/32"

HARDWARE SET TYPE 1

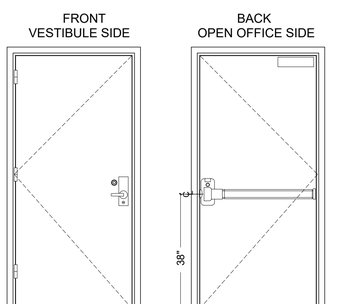

1. HARDWARE TO CONFORM TO THE REQUIREMENTS OF FEDERAL SPECIFICATION FF-L-2740B
2. ELECTRONIC ACCESS CONTROL W/ KEY BYPASS
3. CDX 10 HIGH SECURITY LOCK MEETING THE REQUIREMENTS OF FEDERAL SPECIFICATION FF-L-2890C, TYPE VI.
4. SINGLE MOTION EGRESS WITH A PANIC BAR
5. CORBIN RUSSWIN MORTISED / ELECTRIFIED LOCKSET | ENTRANCE / OFFICE TYPE
6. ANSI NO. F01
7. FINISH US 3 - ANSI / BHMA 605 BRIGHT BRASS
8. HARDWARE SET TO FAIL SECURE
9. DOOR BOTTOM: SEMI-MORTISED ADJUSTABLE UNIT DESIGNED FOR CAM LIFT HINGE OPERATION
10. ELECTRIFIED STRIKE
11. 1 1/2 PAIR OF HINGES
12. CLOSER: GRADE 1, HEAVY DUTY, SURFACE MOUNT
13. THRESHOLD: 5/16" ABA COMPLIANT

ENTRANCE / OFFICE TYPE

1. OUTSIDE LEVER CONTINUOUSLY UNLOCKED BY 12V OR24V DC
2. LATCHBOLT RETRACTED BY LEVER/KNOB INSIDE OR KEY OUTSIDE
3. AUXILIARY LATCH DEADLOCKS LATCH-BOLT WHEN DOOR IS CLOSED
4. INSIDE LEVER ALWAYS FREE FOR IMMEDIATE EGRESS SWITCH OR POWER FAILURE LOCKS OUTSIDE LEVER

HARDWARE SET TYPE 2

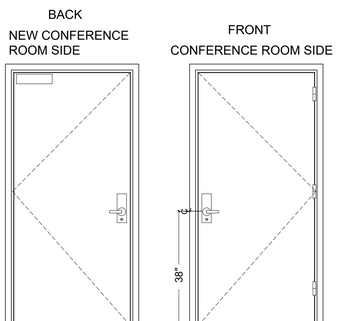

1. HARDWARE TO CONFORM TO THE REQUIREMENTS OF FEDERAL SPECIFICATION FF-L-2740B
2. ELECTRONIC ACCESS CONTROL W/ KEY BYPASS
3. CORBIN RUSSWIN MORTISED / ELECTRIFIED LOCKSET | ENTRANCE / OFFICE TYPE
4. ANSI NO. F01
5. FINISH US 3 - ANSI / BHMA 605 BRIGHT BRASS
6. HARDWARE SET TO FAIL SECURE
7. DOOR BOTTOM: SEMI-MORTISED ADJUSTABLE UNIT DESIGNED FOR CAM LIFT HINGE OPERATION
8. ELECTRIFIED STRIKE
9. 1 1/2 PAIR OF HINGES
10. CLOSER: GRADE 1, HEAVY DUTY, SURFACE MOUNT
11. THRESHOLD: 5/16" ABA COMPLIANT

ENTRANCE / OFFICE TYPE

1. OUTSIDE LEVER CONTINUOUSLY UNLOCKED BY 12V OR24V DC
2. LATCHBOLT RETRACTED BY LEVER/KNOB INSIDE OR KEY OUTSIDE
3. AUXILIARY LATCH DEADLOCKS LATCH-BOLT WHEN DOOR IS CLOSED
4. INSIDE LEVER ALWAYS FREE FOR IMMEDIATE EGRESS SWITCH OR POWER FAILURE LOCKS OUTSIDE LEVER

MERIDIEN GROUP

MERIDIEN GROUP, LLC
208 SOUTH KING ST. SUITE 303
LEESBURG, VA 20175
(703) 777-8285
www.meridiengroupllc.com

CITADEL DCA
ARCHITECTURE | HISTORIC PRESERVATION | PLANNING | DESIGN

CERTIFICATIONS

KEY PLAN

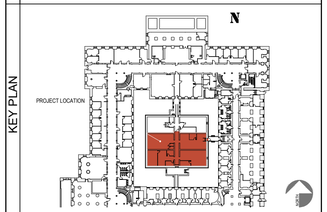

REVISION NOTES

MARK	DATE	DESCRIPTION

GRAPHIC SCALE

CAUTION: IF THIS DRAWING IS A REDUCTION THIS GRAPHIC SCALE MUST BE USED

CAUTION: IF THIS DRAWING IS A REDUCTION THIS GRAPHIC SCALE MUST BE USED

CONTRACTORS	A/E CON. NO.	
	A/E TASK NO.	
	CONS. CONTR	
	CONS. WORK	
	PRIME A/E	MERIDIEN GROUP / CITADEL DCA
	SUB A/E	
BUILDING	NAME	
	STREET	
	CITY/ST./ZIP	WASHINGTON, DC
	BUILDING NO.	DC-
	OTHER	
	BUILDING NOs.	
	FACILITY CODE	
PROJECT	PROJECT TITLE	FEDERAL OFFICE BUILDING MT 1125 OFFICE RENOVATION
	PROJECT DESCRIPTION	RENOVATION OF FIRST FLOOR SUITE AND UPGRADE SECURITY
	PROJECT NO.	MT1125_26_005
	GSA PM	BARBARA CHOATE
	SUBMISSION	100% SUBMISSION REV-3
	SUB. DATE	15 JUNE 2026
DRAWING	DRAWING TITLE	DOOR ASSEMBLY ELEVATIONS
	FILE NAME	
	FLOOR NO.	1ST FLOOR
	DRAWN BY	AGF DATE DRAFTED: 04/24/2026
	CHECKED BY	LSP SHEET SIZE: 24 x 36
	DRAWING NO.	A-603
		DISCIPLINE SHEET TYPE SEQUENCE
		SHEET 17 OF 28

DOOR & SECURITY HARDWARE COMPONENTS

DOOR FRAME & LEAF

STC-50/RF-60
MODEL SOS506022

SHIELDED OPENING SOLUTIONS

MEETING THE NATION'S OPENING NEEDS WITH
Sound and TEMPEST Protection

GENERAL INFO
- Fastest RF/STC Door lead-times in the United States
- Quick-ship options for 3270 and 3280 sized opening

PRODUCT OVERVIEW
- Single doors sized up to 4080
- Galvannealed A60 steel door and frame assembly
- RF Testing with FF-L-2890 lockset
- All assemblies sold through full-service distribution
- Third party tested RF/STC Door according to IEEE-299-2006 and MIL-STD-285 - from 10 kHz to 17.99 GHz
- EMI-RF Shielding Effectiveness (SE) up to 112.8 dB
- EMI-RF average Shielding Effectiveness (SE) 84.2 dB
- RF Door based around Overly Sound Transmission Class (STC-50) Assembly

PRODUCT ADVANTAGES
- Split frame construction accommodates multiple wall conditions
- 1/2" tall stainless steel saddle threshold reinforced for crush resistance
- Cam-lift hinges increase floor clearance
- Fully adjustable Overly sound seal
- Fully adjustable SOS RF seal system
- Hybrid adjustable RF/STC door bottom

ELECTRICAL FIELD SHIELDING EFFECTIVENESS BY FREQUENCY

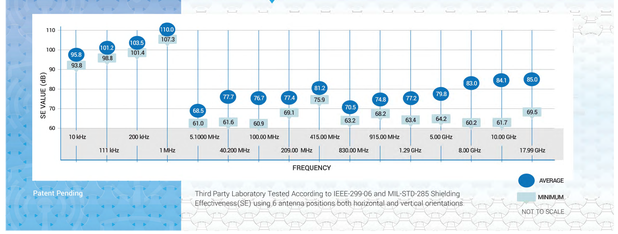

Patent Pending

Third Party Laboratory Tested According to IEEE-299-06 and MIL-STD-285 Shielding Effectiveness(SE) using 6 antenna positions both horizontal and vertical orientations

COMBINATION LOCK

X0 Series - X-10/CDX-10

CDX-10 Specifications

CDX-10 High Security Lock - Pedestrian Door Deadbolts

The Kaba Mas CDX-10 consists of an X-10 high security style 1 lock, Federal Specification FF-L-2740B, mounted on a deadbolt base plate. The base plate is surface-mounted to the inside face of the door. The deadbolt base plate has two essential features:

First, it provides a means of latching the bolt in the retracted position. This prevents the bolt from being inadvertently extended.

Second, turning the knob on the base plate will retract the bolt to allow egress.

The CDX-10has been approved by the General Services Administration (GSA) meeting the requirements of Federal Specification FF-L-2890C, Type VI.

Strikes

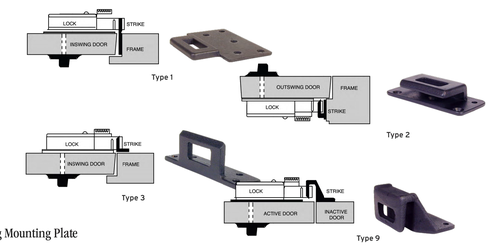

Dial Ring Mounting Plate

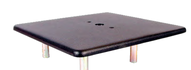

Non Drill-Resistant: Class N

For a complete list of CDX-10 options, part numbers and accessories, please refer to our List Price Book

5

Kaba Mas X-10 Specifications

HARDWARE SPECIFICATIONS
- **Power:** Internal, self-powered by Rotational electromechanical PowerStar™ technology.

COMBINATIONS — 3 MODES:
- **Single:** 1 million combinations
- **Dual:** 500 billion combinations
- **Supervisor/Subordinate:** 2 million combinations

- **Direct Dial:** No need to clear before entering combination. Once you stop turning the dial, the power will shut down after 40 seconds.
- **Memory:** Non-volatile
- **LCD (Backlit):** Limited View Backlit Liquid Crystal Display with visual controls makes dialing easy and exact.
- **Combination Changes:** (LCD indicator in change key mode.) Combination changed with correct combination or serial number.
- **Random Number View:** True Scramble
- **Daylocking:** No
- **Back Dialing:** No
- **Lock Reset:** Automatic when bolt is thrown or 40 seconds after turning has stopped.
- **Manipulation:** Fail secure against high-voltage attack, robot attack, X-ray methods, magnetic, vibration, and R/F.
- **Audit:** The X-10 records all openings, and the record is non-resettable. The X-10 records unsuccessful attempts after 3 incorrect combination attempts and resets after a correct opening.

- **Wrong Try Penalty:** 10-14 errors results in a 3 minute time out. 15 errors or greater results in a 4 minute time out. Both error count and penalty time resets with valid combination.

ENVIRONMENTAL PERFORMANCE (Per FF-L-2740B)
- **Temperature:** Tested -10ºF to 155ºF Operational Range.
- **Salt Spray:** Operational After 72 hours of continuous exposure (per UL 768 Salt Spray Conversion Test).
- **Cycle Test:** Meets or exceeds FF-L-2740B specifications.
- **Humidity:** Operational after 10 days of 140ºF @ 98% humidity (Operational after 10 days testing per MIL-STD-810E, Method 507.3, Procedure III, Temperature Cycling 86ºF to 140ºF @ 98% RH)
- **Stress:** Operational after 7 days in a stress chamber @ 194ºF (per UL 768 Aging Stress Distortion Test).
- **Vibration:** MIL-STD-810
- **Shock:** MIL-STD-901
- **Electrical Discharge:** 250KV on Dial
- **Electromagnetic Pulse**: Meets FF-L-2740B specification for simulation of high altitude nuclear blast.
- **Case & Bolt Strength:** 600 pounds in two directions.
-
-
-

National Stock Numbers (NSN)	X-10	CDX-10
Defense Logistics Agency (DLA)	5340-01-625-9551	5340-01-626-0087
General Services Agency (GSA)	5340-01-613-2078	N/A

EPT

Securitron® CEPT Concealed Electrical Power Transfer

ASSA ABLOY
Opening Solutions

Experience a safer and more open world

The heavy-duty, tamper-resistant Concealed Electrical Power Transfer (CEPT) securely transfers power and data from the hinge side of the frame to electrified hardware on the door.

Aesthetically Pleasing
- Concealed wiring pathway when mortised into door and frame above second hinge
- Available in four architectural finishes
- Direct replacement for competitive product with the same prep

Tested for Durability
- ANSI/SDI-BHMA A250.13 (+/- 150 psi) Windstorm Listed and Florida Building Code Approved
- ANSI/UL 10C Listed, 3 hour rated and ULC-S318 Listed, 3 hour rated
- Tested to 1,000,000 cycles

Robust Design
- All stainless steel construction - no plastic parts
- Tamper resistant with no exposed openings to allow foreign objects to reach wires or jam the device

LIFE MagnaCare Warranty | Fire Rated | Windstorm Resistant

Secure | Concealed | Durable

Specifications

Certifications
- ANSI/UL 10C Listed, 3 hour rated
- ULC-S318 Listed, 3 hour rated
- ANSI/SDI-BHMA A250.13 (+/- 150 psi) Windstorm Listed
- Florida Building Code Approved

Dimensions
- **CEPT Housing:** 9-1/16"L x 1-3/16"W x 1-7/16"D [230.2mm L x 30.12mm W x 36.52mm D]

Shipping Weight
- 2.40 lbs [1.09kg]

Features

Standard Features
- Mortises into the edges of the door and frame
- Direct retrofit for competitor products
- Tamper resistant
- All metal construction including back boxes
- 7/8" [22.25mm] knockouts on back boxes accommodate EMF-type fittings
- Tested to 1 million cycles
- Compatible with butt hinges up to 6" [152.4mm] and continuous hinges with cutout
- MagnaCare® lifetime replacement, no-fault, no questions asked warranty

Optional Features
- CEPT-10 includes 8–22 AWG wires plus 2–18 AWG wires for higher current devices
- CEPT-C5E includes CAT5E compatible with 8-24 AWG wires, 1–22 AWG wire, conductor, Molex connectors
- EL-CEPT is Electrolynx® compatible with 12-22 AWG wires, Electrolynx connectors

Dimensions

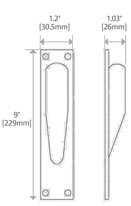

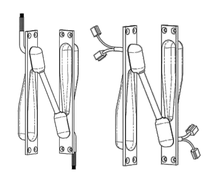

Technical note
- Not for use with center hung or balanced doors, pocket or offset pivots or swing clear hinges.
- Door swing ranges when installed with butt hinges are:

Hinge Size Door	Swing Range
5" [127mm] or less	up to 180
5-1/2" [139.7mm]	up to 130
6" [152.4mm] Butt Hinge	up to 110

How to Order

Wire Connectors	Shape	Number of Wires	Finish
EL	– CEPT	– C5E	– 10B
(blank) No Connectors	**CEPT** Concealed	**(blank)** 12 Wires	**(blank)** 630 Satin Stainless finish
EL Electrolynx Connectors		**10** 10 Wires	**04** 606 Satin Brass finish
		C5E 9 Wires	**10** 612 Satin Bronze finish
			10B 613 Oil Rubbed Bronze finish

ELECTRONIC SECURITY HARDWARE HES | Securitron

assaabloyesh.com
800 626 7590 | 10027 S. 51st Street, Ste. 102 Phoenix, AZ 85044 USA

Patent pending and/or patent www.assaabloydss.com/patents.

Copyright © 2019, Hanchett Entry Systems, Inc., a s ASSA ABLOY Group company. All rights reserved. Reproduction in whole or in part without the express written permission of Hanchett Entry Systems, Inc. is prohibited. ESH-SEC-20-0519

MERIDIEN GROUP

MERIDIEN GROUP, LLC
208 SOUTH KING ST. SUITE 303
LEESBURG, VA 20175
(703) 777-8285
www.meridiengroupllc.com

CITADEL
ARCHITECTURE | HISTORIC PRESERVATION | PLANNING | DESIGN

CERTIFICATIONS

KEY PLAN

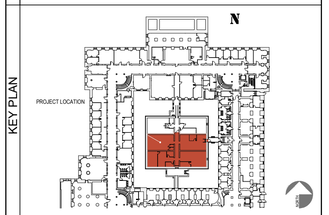

REVISION NOTES

MARK	DATE	DESCRIPTION

GRAPHIC SCALE

CAUTION: IF THIS DRAWING IS A REDUCTION THIS GRAPHIC SCALE MUST BE USED

CONTRACTORS	
A/E CON. NO.	
A/E TASK NO.	
CONS. CONTR	
CONS. WORK	
PRIME A/E	MERIDIEN GROUP / CITADEL DCA
SUB A/E	
BUILDING	
NAME	
STREET	
CITY/ST./ZIP	WASHINGTON, DC
BUILDING NO.	DC-
OTHER BUILDING NOs.	
FACILITY CODE	
PROJECT	
PROJECT TITLE	FEDERAL OFFICE BUILDING MT 1125 OFFICE RENOVATION
PROJECT DESCRIPTION	RENOVATION OF FIRST FLOOR SUITE AND UPGRADE SECURITY
PROJECT NO.	MT1125_26_005
GSA PM	BARBARA CHOATE
SUBMISSION	100% SUBMISSION REV-3
SUB. DATE	15 JUNE 2026
DRAWING	
DRAWING TITLE	FRAMING COMPONENTS BOD
FILE NAME	
FLOOR NO.	1ST FLOOR
DRAWN BY	AGF DATE DRAFTED: 04/24/2026
CHECKED BY	LSP SHEET SIZE: 24 x 36
DRAWING NO.	A-701
	DISCIPLINE SHEET TYPE SEQUENCE
	SHEET 18 OF 28

DOOR ASSEMBLY COMPONENTS

DOOR HARDWARE

Corbin Russwin ASSA ABLOY

Trim Designs
ML2000, ML20900 ECL and ML20600 NAC Series

Citation
- Brass, bronze or stainless steel
- Laser engraving option
  (See Custom Laser Engraving brochure)

Corbin Russwin ASSA ABLOY

Trim Designs
ML2000, ML20900 ECL and ML20600 NAC Series

CSM
Lever: Cast
Escutcheon: Wrought
Optional:
- Plug only to show; master ring
- Laser engraving on lever or escutcheon

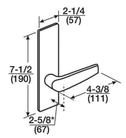

CSN
Lever: Cast
Escutcheon: Wrought
Optional: Laser engraving on lever

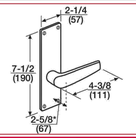

Corbin Russwin ASSA ABLOY

Functions
ML2000 Series

Outside	Inside	Function (ANSI No.)	Type	Function Description
A02		ML2053	Entrance or Office	• Latchbolt by grip either side, unless outside grip is locked or unlocked by key or thumbturn. • Outside grip locked or unlocked by key or thumbturn. • Latchbolt by key when outside grip locked. • Auxiliary latch deadlocks latchbolt. • Inside grip always free.
A01		ML2054 (F04)	Entrance or Office	• Latchbolt by grip either side, unless outside grip is locked. • Outside grip locked or unlocked by thumbturn. • Latchbolt by key when outside grip locked. • Auxiliary latch deadlocks latchbolt. • Inside grip always free. • Multi-function capable, see page 10 for more info.
A02		ML2055 (F05)	Classroom	• Latchbolt by grip either side, unless outside grip is locked by key outside • Latchbolt by key when outside grip locked. • Auxiliary latch deadlocks latchbolt. • Inside grip always free. • Outside grip remains locked unless unlocked by key. Note: Not available with indicator, specify ML2003.

Indicator options available for both sectional and escutcheon trim.
Cylinder cam required.
Indicates rigid grip.
*When lever handles are furnished, both outside and inside are locked when deadbolt is projected.

Overview
ML20900 ECL Series

ML20900 ECL Series
Electrified Mortise Lockset

Simplicity
Combine simplicity and access control with the Corbin Russwin ML20900 ECL series electrically controlled mortise lock. Utilizing the proven ML2000 Series mortise lockset with the patented quick reversible latchbolt, the ML20900 series provides remote locking and unlocking. The electrified lock can be installed in a standard mortise prep with slight modification by door manufacturer. The ML20900 ECL is ideal for use where increased security is necessary at all times, such as tenant space, pharmacies, computer rooms, and high security areas.

Security
In applications where increased security is required, look no further than the ML2000VR Vandal Resistant Trim. This cast stainless steel trim features tapered edges, double through bolts, torx-pin tamper resistant screws and the lever remains attached to the escutcheon when the spindle is broken.

Aesthetics
Access control doesn't mean a loss of visual appeal. The Vineyard™ Collection and the Muséo® Collection feature beautifully designed levers, perfect for high-profile applications where pleasing aesthetics is a must.

Additional Features
- Mechanical key override
- Patented Quick Reversible latchbolt (Patent pending and/or patent www.assaabloydss.com/patents.)

Featuring EcoFlex®:
- Reduces energy consumption up to 96%, as certified by GreenCircle
  - Lower operating costs
  - Assists with load reduction in optimizing energy performance credit in LEED
  - Reduces number of power supplies required
- Field configurable to fail-safe or fail-secure
- Operates from 12-24VDC, offering greater flexibility in system design
- Innovative actuator design provides superior reliability
  - Higher performance and reduced maintenance
  - Ability to have longer cable runs without negatively impacting lock function
  - Reduces risk of voltage drops and eliminates inductive kickback
  - Lower total cost of ownership

Note: EcoFlex® is not available with master ring cylinders. Solenoid provided.

Typical Application

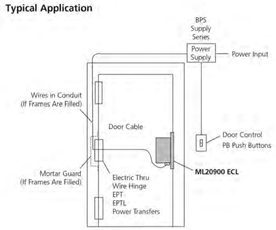

Typical System Components (For Reference Only)
ML20900 ECL Series

Tower Stairwell

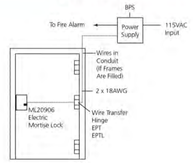

Operation:
Free egress at all times. Door is locked at all times preventing entry from the stairwell to a floor. Fire alarm activation will allow re-entry from the stairwell to the floor. Power failure will allow re-entry from the stairwell to the floor.

Controlled Entry With Alarm

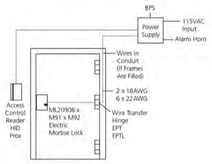

Operation:
Free egress at all times. User exits through the door which triggers the M92 switch which shunts the alarm. Door is locked at all times preventing unauthorized entry. Authorized entry is permitted by presenting a valid user card. Forced entry will trigger M91 switch and activate alarm. Alarm is deactivated by a valid user card.

Access Control on Employee Entrance

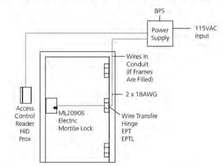

Operation:
Free egress at all times. Door is locked at all times preventing unauthorized entry. Authorized entry is permitted by presenting a valid user card.

ElectroLynx®, a system of universal Molex® plug-in connectors and standardized color-coded wiring, makes installing electrified doorway components a snap!

Lock Schematics

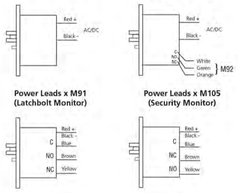

Options and Accessories
ML2000 Series, ML20900 ECL and ML20600 NAC

Requirements for Electrical and Data Transfer

To answer the demand for "smart" electronic access control and locking solutions that require fast, easy, and cost-effective installation, ASSA ABLOY Group brands use the ElectroLynx® standardized plug-in connectors and color-coded wiring system.

With *ElectroLynx,* doorway components come pre-wired for easy hookup to the power source. The key to the system is the transfer device hinge that carries power from the frame to the locking hardware.

Features of ElectroLynx:
- Makes it easy to bring power to the locking hardware
- Wires have connectors that snap together, like plugging a telephone into a jack

To connect a ML20900 electrified mortise lock to the electronic access control system, the following items are required:
- ML20900 electrified mortise lock
- ASSA ABLOY Door Group pre-wired door, or *ElectroLynx* retrofit cable (order from McKinney)
- Electronic transfer device (*ElectroLynx* electronic transfer hinge or Electrical Power Transfer with standard hinge, from McKinney)
- *ElectroLynx* cable from the hinge to above the ceiling (order from McKinney)

Information regarding cable selection, hinge requirements and order strings can be found in the McKinney Transfer Device Solutions catalog. Consult 800-810-WIRE (9473) with questions on application specifications and requirements.

The McKinney QC8 ElectroLynx Hinge is recommended for all ML20900 functions and electrified options.

finish options

Color	Bright brass	Satin brass	Antique bronze	Satin bronze	Oil rubbed bronze	Satin nickel	Matte black	Bright chrome	Satin chrome	Bright stainless steel	Satin stainless steel	Aged bronze
ANSI/BHMA	605	606	609	612	613	619	622	625	626/ 626AM	629	630/ 630AM	643e
US	US3	US4	US5	US10	US10B	US15	US19	US26	US26D	US32	US32D	US11

EXIT / PANIC DEVICE

Device types

9875-F/9975-F Mortise lock fire exit device

9875-F/9975-F Fire exit mortise lock devices are certified to ANSI/BHMA A156.3 Grade 1 and UL listed for fire exit hardware. See page 69 for detailed information on UL listed fire exit hardware label and door opening size information. Fits door stiles as narrow as 4 ¼" (121mm). The 9875-F device has a smooth mechanism case and the 9975-F device has a grooved case. The mortise lock device is non-handed except when the following device options are used: -2 (double cylinder), -2SI (double cylinder with security indicator) or SS (signal switch) devices.

The 7500 Mortise lock is equipped with ¾" (19mm) anti-friction latch bolt which is field reversible without removing the lock from the door. It has a non-handed auxiliary bolt for deadlocking and a faceplate with an adjustable bevel.

Specifications

Device functions	Device ships setup for EO/DT/NL functions. Instructions show how to set up the device in the field for use with TP, K, and L classroom function trims.
Device lengths	3' 2'4" to 3' (711mm to 914mm) Door size 4' 2'10" to 4' (864mm to 1219mm) Door size
Device centerline from finished floor	39 ⅛" (1006mm)
Center case	8" x 2 ½" x 2 ½" (203mm x 70mm x 60mm)
Mechanism case	2 ¼" x 2 ¼" (57mm x 57mm)
Projection	Pushbar neutral – 3 ⅞" (97mm) Pushbar depressed – 3 ⅛" (78mm)
Finishes	605, 606, 612, 625, 626/626AM, 628, 710, 711 and 643e (619 and 630 available with 98 Series only)
Fasteners and sex bolts (SNB)	Includes screw pack for 1 ¾" (44mm) and 2 ¼" (57mm) thick metal or wood doors. Optional 425 SNB available for metal doors. 425 and 825 SNB required on wood doors without SLM blocking. (See page 66 for quantities)

Features and options

Electrified options
- **RX** Request to exit
- **RX2** Double request to exit
- **ESL** Emergency secure lockdown
- **QEL** Quiet electric latch retraction
- **SS** Signal switch
- **CX** Chexit delayed exit
- **ALK** Alarm exit kit
- **WP-RX** Waterproof request to exit
- **CON** Allegion Connect

Mechanical options
- **-2** Double cylinder
- **-2SI** Double cylinder with security indicator
- **GBK** Glass bead kit
- **PN** Pneumatic latch retraction
- **SNB** Sex bolts
- **SEC** Security screws
- **SLM** Special laminate material blocking
- **WH** Weep holes

Dogging option
No mechanical dogging;
QEL options available

Strikes
575 – Dull black

Accessories

7500 Mortise lock

575 Strike

Introduction | How to order | Device types | Trim options | Mechanical options | Electrified options | Accessories | Additional information

11 • Von Duprin • 98/99 Series

THRESHOLD

Reese
WEATHERSTRIPS & THRESHOLDS
Guaranteed quality since 1918

Threshold

Saddle

S105

#10 x 1-1/2" wood screws provided.

Finishes:

A - Aluminum Mill Finish
D - Dark Bronze Anodized Aluminum

MERIDIEN GROUP

MERIDIEN GROUP, LLC
208 SOUTH KING ST. SUITE 303
LEESBURG, VA 20175
(703) 777-8285
www.meridiengroupllc.com

CITADEL
ARCHITECTURE | HISTORIC PRESERVATION | PLANNING | DESIGN

CERTIFICATIONS

KEY PLAN

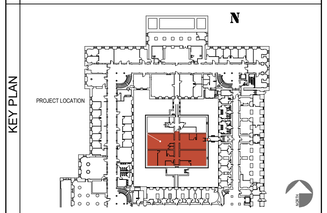

REVISION NOTES

MARK	DATE	DESCRIPTION

GRAPHIC SCALE

CAUTION: IF THIS DRAWING IS A REDUCTION THIS GRAPHIC SCALE MUST BE USED

A/E CON. NO.	
A/E TASK NO.	
CONS. CONTR	
CONS. WORK	
PRIME A/E	MERIDIEN GROUP / CITADEL DCA
SUB A/E	
NAME	
STREET	
CITY/ST./ZIP	WASHINGTON, DC
BUILDING NO.	DC-
OTHER	
BUILDING NOs.	
FACILITY CODE	
PROJECT TITLE	FEDERAL OFFICE BUILDING MT 1125 OFFICE RENOVATION
PROJECT DESCRIPTION	RENOVATION OF FIRST FLOOR SUITE AND UPGRADE SECURITY
PROJECT NO.	MT1125_26_005
GSA PM	BARBARA CHOATE
SUBMISSION	100% SUBMISSION REV-3
SUB. DATE	15 JUNE 2026
DRAWING TITLE	DOOR ASSEMBLY COMPONENTS BOD
FILE NAME	
FLOOR NO.	1ST FLOOR
DRAWN BY	AGF DATE DRAFTED: 04/24/2026
CHECKED BY	LSP SHEET SIZE: 24 x 36
DRAWING NO.	A-702
	DISCIPLINE SHEET TYPE SEQUENCE
	SHEET 19 OF 28

MCL-500 Cam-Lift Hinge Template

OVERLY DOOR COMPANY
www.overly.com

Mortise Type

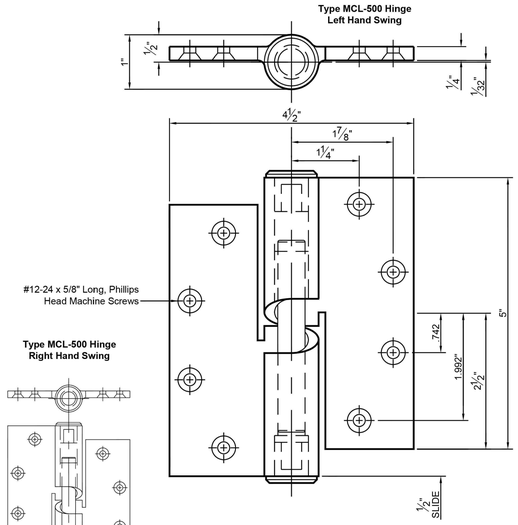

Dimensions are the same as shown above

Overly warrants that a pair of these hinges will support given door loadings when installed with #12-24 x 5/8" flat, phillips head screws, engaged no less than 3/16" in ASTM A-36 steel reinforcements.

Model MCL-500 Cam-Lift Hinges

Mortise Type

The Overly MCL-500 mortise-type cam-lift hinge was developed for use primarily with sound doors to improve sealing characteristics along the door bottom. They also have application where weather-stripping across a flush threshold is required.

Produced in two models, one for right and one for left swinging doors, it is a true template hinge, lifting the door 1/2" when the door is fully opened. The modest amount of lift permits problem-free use with doors equipped with overhead closers and electric door operators.

It is made of investment cast stainless steel and precision machined to accept a hardened pin.

Designed for doors weighing up to 500 pounds, the hinge has been cycled more than 1 million times with virtually no wear when supporting a 400 pound door.

The hinge pin is a hardened dowel inserted in sintered bronze oil impregnated bearing for long-life, low-friction service.

Specify hand when ordering.
Mounting Screws Supplied.

OVERLY DOOR COMPANY
574 West Otterman Street
Greensburg, PA • 15601
Toll Free: (800) 979-7300
Fax: (724) 830-2871
Email: overly@overly.com

ENGD-077 Rev#00 05/31/2004

8900 SERIES HEAVY-DUTY SURFACE CLOSERS

Versatile, durable, and reliable, featuring modern styling for institutional or high-traffic commercial applications.

DORMA'S 8900 Series, Grade 1 hydraulic surface closers are housed in corrosion-resistant aluminum with a hardened pinion/piston providing toughness and high-strength. The arm hub is made from forged steel.

Standard on the 8900 Series closers are backcheck positioning with two adjustment valves, adjustable spring sizes from 1–6. Independently certified to 10 million, the 8900 Series closers are ideal for a variety of heavy-duty, as well as barrier-free, applications.

CONTENTS

	Features and Specifications	4
	Ordering Guide	5
Technical Drawings	Regular × flat form arm	6
	Regular × friction hold open	7
	Regular × plunger hold open	7
	Regular × cushion IS arm	8
	Regular × spring stop IS arm	8
	Regular × flat form arm × backplate	9
	Regular × flat form arm × mortised jamb bracket	9
	Top jamb × flat form arm	10
	Top jamb × flat form arm × backplate	10
	Top jamb drop × flat form arm × backplate	11
	Top jamb × friction hold open × backplate	11
	Top jamb × cushion IS arm × backplate	12
	Top jamb × spring stop IS arm	12
	Top jamb × flat form arm × angle bracket	13
	Parallel arm × flat form arm	13
	Parallel arm × friction hold open	14
	Parallel arm × plunger hold open	14
	Parallel arm × flat form arm × drop plate	15
	Parallel arm × flat form arm × mortised jamb bracket	15

PARALLEL ARM × FLAT FORM ARM

8916 AF89P

8956 AF89P
(P89 bracket furnished standard)

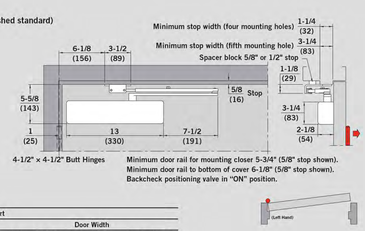

Size Selection Chart

Closer	Interior/ Exterior	Door Width 2'-0" min.	2'-6" max.	3'-0" max.	3'-6" max.	4'-0" max.	4'-6" max.
8916	Interior	•	•	⚠	⚠	⚠	N/A
	Exterior	•	•	•	•	N/A	N/A
8956	Interior	N/A	N/A	N/A	•	•	•
	Exterior	N/A	N/A	•	•	•	N/A

Maximum Opening	Approximate Backcheck	Approximate Delayed Action	Minimum Door Width
180°	60°–180°	180°–70°	24"

REGULAR × FLAT FORM ARM

8916 AF89
8956 AF89

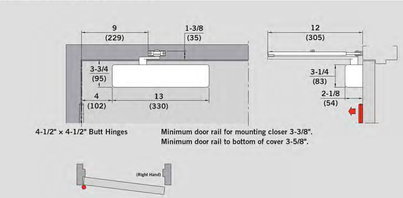

Size Selection Chart

Closer	Interior/ Exterior	Door Width 2'-0" min.	2'-6" max.	3'-0" max.	3'-6" max.	4'-0" max.	4'-6" max.	5'-0" max.
8916	Interior	•	•	⚠	⚠	⚠	⚠	N/A
	Exterior	•	•	•	•	•	N/A	N/A
8956	Interior	N/A	N/A	N/A	N/A	•	•	•
	Exterior	N/A	N/A	N/A	•	•	•	N/A

Maximum Opening	*Approximate Backcheck	Approximate Delayed Action
180°	65°-180°	180°-65°

* Backcheck positioning valve factory preset to on, advancing backcheck approximately 15°.

Architectural Door Accessories

ASSA ABLOY

The global leader in door opening solutions

Rockwood 441H - Cast Universal Dome Stop

Available Finishes:

- US3/605
- US4/606
- US10/612
- US10B/613
- US10BL/613B
- US15/619
- US26/625
- US26D/626

SIZE:
Base: Ø 1-7/8" x 7/8"h
Height: 1-7/8"

WEIGHT:
3.2 lbs./10

ANSI A156.16:
L02141/ L02161

Specifications:

MATERIAL:
Solid Cast Brass with Rubber Bumper

FASTENERS:
*12 x 1 1/4" Flat Head Wood Screw, Plastic Anchor
*12-24 x 1" Flat Head Machine Screw, Anchor

FEATURES:
Low lip dome stop with height of high dome stop, eliminates the need to determine requirement for traditional low or high dome stop - one stop for all applications. Integral cast pin for added strength. Universal screw pack included for all floor conditions.

OPTIONS:
Exterior Pack screw packs; stainless steel plated to match - use EXP suffix (441H x EXP) when ordering

⚠ WARNING
This product can expose you to lead which is known to the state of California to cause cancer and birth defects or other reproductive harm. For more information go to www.P65warnings.ca.gov.

300 Main Street
Rockwood, Pennsylvania 15557
P: 800.458.2424 • F: 800.922.9212
www.assaabloydooraccessories.us • orders.rockwood@assaabloy.com

Copyright © 2018, ASSA ABLOY Accessories and Door Controls Group, Inc., All rights reserved. Reproduction in whole or in part without the express written permission of ASSA ABLOY Accessories and Door Controls Group, Inc. is prohibited.

CS-441H 10/18

CUT SHEET

Rockwood 608-RKW Door Silencer

ROCKWOOD
ASSA ABLOY

Experience a safer and more open world

SPECIFICATIONS:

MATERIAL:
Rubber

OTHER:
Sold in packages of 100

AVAILABLE FINISHES:

- Gray (Standard)
- Black

Size:
1/2" x 5/8"

Weight:
1.3 lbs./500

Frame Type:
Metal

MERIDIEN GROUP

MERIDIEN GROUP, LLC
208 SOUTH KING ST. SUITE 303
LEESBURG, VA 20175
(703) 777-8285
www.meridiengrouplic.com

DCA CITADEL
ARCHITECTURE | HISTORIC PRESERVATION | PLANNING | DESIGN

CERTIFICATIONS

KEY PLAN

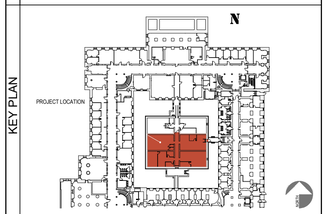

REVISION NOTES

MARK	DATE	DESCRIPTION

GRAPHIC SCALE

CAUTION: IF THIS DRAWING IS A REDUCTION THIS GRAPHIC SCALE MUST BE USED

CONTRACTORS	A/E CON. NO.	
	A/E TASK NO.	
	CONS. CONTR	
	CONS. WORK	
	PRIME A/E	MERIDIEN GROUP / CITADEL DCA
	SUB A/E	
BUILDING	NAME	
	STREET	
	CITY/ST./ZIP	WASHINGTON, DC
	BUILDING NO.	DC-
	OTHER	
	BUILDING NOs.	
	FACILITY CODE	
PROJECT	PROJECT TITLE	FEDERAL OFFICE BUILDING MT 1125 OFFICE RENOVATION
	PROJECT DESCRIPTION	RENOVATION OF FIRST FLOOR SUITE AND UPGRADE SECURITY
	PROJECT NO.	MT1125_26_005
	GSA PM	BARBARA CHOATE
	SUBMISSION	100% SUBMISSION REV-3
	SUB. DATE	15 JUNE 2026
DRAWING	DRAWING TITLE	DOOR ASSEMBLY COMPONENTS BOD
	FILE NAME	
	FLOOR NO.	1ST FLOOR
	DRAWN BY	AGF DATE DRAFTED: 04/24/2026
	CHECKED BY	LSP SHEET SIZE: 24 x 36
	DRAWING NO.	A-703
		DISCIPLINE SHEET TYPE SEQUENCE
		SHEET 20 OF 28

FRAMING COMPONENTS

HDS® Framing System

The HDS® Framing System is a high-performance, cost-effective, multipurpose, heavy-duty framing stud for headers, jambs, posts and built-up tube truss chords and webs. The superior strength and carrying capacity of the HDS Framing System means higher performance with fewer members. It means eliminating box beam headers, nesting track and stud for posts and jambs, and eliminating multi-member built-up truss chords and webs. It also means improved finish quality by eliminating excessive material and screw head buildup around doors and windows.

The HDSC header bracket is the perfect complement to the HDS Framing System. This simple, yet innovative header bracket turns curtain wall header installation from a two-person job into a one-person job. This unique, prepunched clip also eliminates surface head fastener buildup that can create finishing challenges.

CONSTRUCTION ADVANTAGES:

- Outstanding bending strength in two directions.
- Reduces installation time by 50%.
- Eliminates box beam header assembly.
- Reduces material and labor costs up to 50%.
- HDS can be screw-attached from either side.
- Eliminates stud-to-track nesting for post, header and jamb studs.
- Openings up to 20' wide.
- Improves drywall finishing around doors and windows. No screw head buildup.
- Superior axial strength.

ORDERING INFORMATION:

- Pre-cut headers (4'-0" and over) available standard, based on minimum quantity orders.
- Minimum quantity orders of 30 headers required.
- HEADER LENGTHS SHOULD BE ORDERED 1/2" SHORTER THAN OPENING WIDTH TO FIT INSIDE CLIPS (header length = inside of jamb to inside of jamb minus 1/2") Listed capacities are based on a maximum gap between the clip and the end of the header of 1/4".

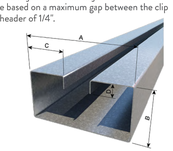

HDS® Profile Information

Product Code	Dimensions: Web Size (A)	Flange (B)	Return Lip (C)	Stiffening Lip (D)	Thickness: Mils (Gauge)	Design Thickness (in)	Fy (ksi)
362HDS300-33	3-5/8"	3.00"	1.0625"	0.75"	33 (20)	0.0346	33
362HDS300-43					43 (18)	0.0451	33
362HDS300-54					54 (16)	0.0566	50
362HDS300-68					68 (14)	0.0713	50
362HDS300-97					97 (12)	0.1017	50
400HDS300-33	4"	3.00"	1.0625"	0.75"	33 (20)	0.0346	33
400HDS300-43					43 (18)	0.0451	33
400HDS300-54					54 (16)	0.0566	50
400HDS300-68					68 (14)	0.0713	50
400HDS300-97					97 (12)	0.1017	50
600HDS300-33	6"	3.00"	2.250"	0.75"	33 (20)	0.0346	33
600HDS300-43					43 (18)	0.0451	33
600HDS300-54					54 (16)	0.0566	50
600HDS300-68					68 (14)	0.0713	50
600HDS300-97					97 (12)	0.1017	50
800HDS300-33	8"	3.00"	2.250"	0.75"	33 (20)	0.0346	33
800HDS300-43					43 (18)	0.0451	33
800HDS300-54					54 (16)	0.0566	50
800HDS300-68					68 (14)	0.0713	50
800HDS300-97					97 (12)	0.1017	50

HDSC 97mil (12ga) Header Brackets (3" & 3-1/2" Flange)

CLIP EXPRESS

Product Code	Bracket Specs: Depth (D)	Height (H)	Framing Member Specs: Thickness: Mils (Gauge)	Yield Strength, Fy (ksi)	Designed to Support
350HDSC300-97	3-1/2"	3"	97 (12)	50	3-5/8" RedHeader or HDS with 3" Flange
350HDSC350-97		3-1/2"			3-5/8" RedHeader with 3-1/2" Flange
387HDSC300-97	3-7/8"	3"	97 (12)	50	4" RedHeader or HDS with 3" Flange
387HDSC350-97		3-1/2"			4" RedHeader with 3-1/2" Flange
587HDSC300-97	5-7/8"	3"	97 (12)	50	6" RedHeader or HDS with 3" Flange
587HDSC350-97		3-1/2"			6" RedHeader with 3-1/2" Flange
787HDSC300-97	7-7/8"	3"	97 (12)	50	8" RedHeader or HDS with 3" Flange
787HDSC350-97		3-1/2"			8" RedHeader with 3-1/2" Flange

All material G90. Sold in pairs.

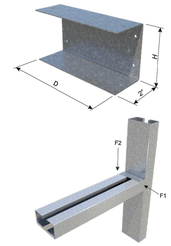

Allowable Loads (lbs) for 3" & 3-1/2" Flange Header Systems

Product Code	Bracket Specs: Depth (D)	Height (H)	Framing Member Specs: Thickness: Mils (Gauge)	Yield Strength, Fy (ksi)	Fasteners: Jamb	Header	Capacities (lbs): F1 Load (Lateral): Nominal (lbs)	ASD Load (lbs)	LRFD Load (lbs)	F2 Load (Vertical): Nominal (lbs)	ASD Load (lbs)	LRFD Load (lbs)
350HDSC300-97	3-1/2"	3"	33 (20)	33	4 x #12	4 x #12	1435	735	1130	880	300	495
			43 (18)	33			2490	1120	1680	1375	470	865
			54 (16)	50			4025	1385	2215	2195	755	1410
			68 (14)	50			4340	1490	2390	3465	1190	2000
			97 (12)	50			6075	2090	3345	5610	1930	2380
350HDSC350-97	3-1/2"	3-1/2"	54 (16)	50	4 x #12	4 x #12	4080	1400	2245	2145	735	1545
			68 (14)	50			4265	1465	2350	3575	1230	2090
			97 (12)	50			6005	2065	3305	5385	1850	2405
387HDSC300-97	3-7/8"	3"	33 (20)	33	4 x #12	4 x #12	1405	720	1130	885	305	550
			43 (18)	33			2490	1120	1680	1375	470	865
			54 (16)	50			4105	1410	2260	2405	825	1455
			68 (14)	50			4105	1410	2260	3360	1155	1530
			97 (12)	50			6000	2065	3305	5840	2010	2560
387HDSC350-97	3-7/8"	3-1/2"	54 (16)	50	4 x #12	4 x #12	3975	1365	2185	2230	765	1620
			68 (14)	50			4195	1445	2310	3630	1250	2080
			97 (12)	50			6185	2130	3405	5500	1890	2455
587HDSC300-97	5-7/8"	3"	33 (20)	33	4 x #12	4 x #12	1370	700	1125	895	305	610
			43 (18)	33			2345	1120	1680	1400	480	820
			54 (16)	50			4340	1475	2390	2615	900	1500
			68 (14)	50			4340	1490	2390	3465	1190	2000
			97 (12)	50			5930	2040	3265	6065	2085	2740
587HDSC350-97	5-7/8"	3-1/2"	54 (16)	50	4 x #12	4 x #12	3870	1330	2130	2310	795	1690
			68 (14)	50			4195	1445	2310	3630	1250	2080
			97 (12)	50			6060	2085	3335	5840	2010	2600
787HDSC300-97	7-7/8"	3"	33 (20)	33	4 x #12	4 x #12	1370	700	1125	895	305	610
			43 (18)	33			2200	1120	1680	1420	485	770
			54 (16)	50			4125	1420	2270	2945	1015	1485
			68 (14)	50			4125	1420	2270	3685	1265	2070
			97 (12)	50			5770	1985	3175	6085	2090	2710
787HDSC350-97	7-7/8"	3-1/2"	54 (16)	50	4 x #12	4 x #12	4070	1400	2240	2625	905	1505
			68 (14)	50			4125	1420	2270	3685	1265	2070
			97 (12)	50			5935	2040	3265	6180	2125	2350

Notes:

1 Listed Capacities were derived from calculations and structural tests in accordance with provisions of AISI S100 and ICC-ES AC261.
2 The safety factor for ASD loads and resistance factor for LRFD loads are calculated in accordance with Chapter K.
3 The capacity of a given HDSC connection is the minimum of the corresponding jamb and the header values. For example, for a 3-1/2" HDSC-97 bracket (3" Flange) used with a 54mil (16ga) 50 ksi jamb and a 97mil (12ga) 50 ksi header, the F2 allowable design load shall be the capacity corresponding to framing member with lesser thickness i.e., 16ga member. Thus, the ASD capacity is 750 lbs.
4 #12-14 HWH Screws by ITW Buildex were used to attach Brackets to Jamb and Header. The screws shall have a minimum shear capacity of 2000 lbs and minimum tension capacity of 2325 lbs. Evidence shall be provided to the building official for approval that defines the fasteners meet the performance requirements of this report, ASTM C1513 and are for use with cold-formed steel.
5 For simultaneous F1 and F2 loading, use the following interaction equation: $(F1/F1')^{*}(F2/F2')\leq 1.0$ Where F1 and F2 are the applied loads and F1' and F2' are the appropriate allowable loads.
6 It is the responsibility of the design professional to detail the project drawings for proper HDSC bracket installation.

HDS® Framing Details

HDS® HEADER CONNECTIONS

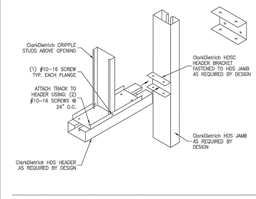

HDS SILL CONNECTIONS

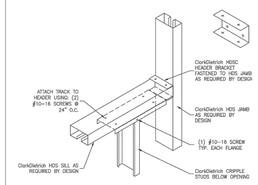

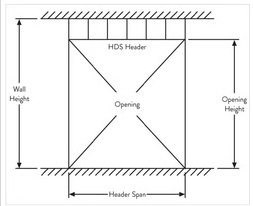

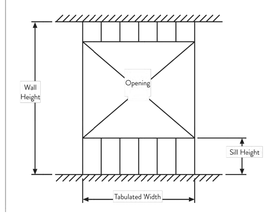

For use with the HDS® Framing System.

The ClarkDietrich HDS Framing System provides outstanding bending strength in two directions and superior axial strength. Plus, it reduces material, labor costs and installation time by up to 50%. The superior strength and carrying capacity of the HDS means higher performance with fewer members, like eliminating box beam headers, nesting track and stud for posts and jambs. It also means improved finish quality by eliminating excessive material and screw head buildup around doors and windows. The HDSC header bracket is a unique, prepunched clip that turns curtain wall header installation from a two-man job into a one-man job.

Allowable HDS® Header Spans for Window and Door Openings — Interior Span Chart

Wall Height (ft)	Wall Size (in)	Member	Mils (Gauge)	Yield Strength, Fy (ksi)	Flange (in)	Interior Allowable Spans: Lateral Load (psf) = 5, Dead Load (psf) = 10; Strong Axis Deflection Targets; Opening Heights: L/120				L/240				L/360			
						7		8		9		7		8		9	
9	3-5/8	362HDS300-33	33 (20)	33	3	11'-3"	1	13'-0"	1	–		11'-3"	1	13'-0"	1	–	
		362HDS300-43	43 (18)	33	3	12'-8"	2	15'-1"	2	–		12'-8"	2	15'-0"	2	–	
		362HDS300-54	54 (16)	50	3	13'-5"	2	16'-0"	2	–		13'-5"	2	16'-0"	2	–	
		362HDS300-68	68 (14)	50	3	14'-1"	2	16'-0"	2	–		14'-1"	2	16'-0"	2	–	
		362HDS300-97	97 (12)	50	3	15'-2"	3	16'-0"	3	–		15'-2"	3	16'-0"	3	–	
	6	600HDS300-33	33 (20)	33	3	13'-3"	1	15'-9"	1	–		13'-3"	1	15'-9"	1	–	
		600HDS300-43	43 (18)	33	3	14'-3"	2	17'-0"	2	–		14'-3"	2	17'-0"	2	–	
		600HDS300-54	54 (16)	50	3	15'-0"	2	17'-11"	2	–		15'-0"	2	17'-11"	2	–	
		600HDS300-68	68 (14)	50	3	15'-10"	2	18'-10"	2	–		15'-10"	2	18'-10"	2	–	
		600HDS300-97	97 (12)	50	3	17'-1"	3	20'-0"	3	–		17'-1"	3	20'-0"	3	–	
11	3-5/8	362HDS300-33	33 (20)	33	3	9'-0"	1	9'-10"	1	11'-0"	1	9'-0"	1	9'-10"	1	11'-0"	1
		362HDS300-43	43 (18)	33	3	10'-6"	2	11'-6"	2	12'-8"	2	10'-6"	2	11'-6"	2	12'-8"	2
		362HDS300-54	54 (16)	50	3	11'-3"	2	12'-1"	2	13'-5"	2	11'-3"	2	12'-1"	2	13'-5"	2
		362HDS300-68	68 (14)	50	3	11'-10"	2	12'-9"	2	14'-1"	2	11'-10"	2	12'-9"	2	14'-1"	2
		362HDS300-97	97 (12)	50	3	12'-9"	3	13'-8"	3	15'-2"	3	12'-9"	3	13'-8"	3	15'-2"	3
	6	600HDS300-33	33 (20)	33	3	11'-0"	2	12'-0"	1	13'-3"	1	11'-0"	2	12'-0"	1	13'-3"	1
		600HDS300-43	43 (18)	33	3	12'-0"	2	12'-10"	2	14'-3"	2	12'-0"	2	12'-10"	2	14'-3"	2
		600HDS300-54	54 (16)	50	3	12'-8"	2	13'-7"	2	15'-0"	2	12'-8"	2	13'-7"	2	15'-0"	2
		600HDS300-68	68 (14)	50	3	13'-4"	2	14'-4"	2	15'-10"	2	13'-4"	2	14'-4"	2	15'-10"	2
		600HDS300-97	97 (12)	50	3	14'-5"	3	15'-6"	3	17'-1"	3	14'-5"	3	15'-6"	3	17'-1"	3
13	3-5/8	362HDS300-33	33 (20)	33	3	7'-9"	1	8'-3"	1	9'-0"	1	7'-9"	1	8'-3"	1	9'-0"	1
		362HDS300-43	43 (18)	33	3	9'-0"	2	9'-7"	2	10'-4"	2	9'-0"	2	9'-7"	2	10'-4"	2
		362HDS300-54	54 (16)	50	3	10'-2"	2	10'-8"	2	11'-3"	2	10'-2"	2	10'-8"	2	11'-3"	2
		362HDS300-68	68 (14)	50	3	10'-8"	2	11'-2"	2	11'-10"	2	10'-8"	2	11'-2"	2	11'-10"	2
		362HDS300-97	97 (12)	50	3	11'-6"	3	12'-1"	3	12'-9"	3	11'-6"	3	12'-1"	3	12'-9"	3
	6	600HDS300-33	33 (20)	33	3	9'-4"	2	10'-0"	2	10'-10"	2	9'-4"	2	10'-0"	2	10'-10"	2
		600HDS300-43	43 (18)	33	3	10'-10"	2	11'-4"	2	12'-0"	2	10'-10"	2	11'-4"	2	12'-0"	2
		600HDS300-54	54 (16)	50	3	11'-5"	2	12'-8"	2	13'-5"	2	11'-5"	2	12'-8"	2	13'-5"	2
		600HDS300-68	68 (14)	50	3	12'-0"	2	12'-7"	2	13'-4"	2	12'-0"	2	12'-7"	2	13'-4"	2
		600HDS300-97	97 (12)	50	3	13'-0"	3	13'-7"	3	14'-5"	3	13'-0"	3	13'-7"	3	14'-5"	3
15	3-5/8	362HDS300-33	33 (20)	33	3	6'-10"	2	7'-3"	2	7'-8"	2	6'-10"	2	7'-3"	2	7'-8"	2
		362HDS300-43	43 (18)	33	3	8'-0"	2	8'-5"	2	8'-11"	2	8'-0"	2	8'-5"	2	8'-11"	2
		362HDS300-54	54 (16)	50	3	9'-3"	2	9'-9"	2	10'-2"	2	9'-3"	2	9'-9"	2	10'-2"	2
		362HDS300-68	68 (14)	50	3	10'-0"	2	10'-3"	2	10'-8"	2	10'-0"	2	10'-3"	2	10'-8"	2
		362HDS300-97	97 (12)	50	3	10'-8"	3	11'-1"	3	11'-6"	3	10'-8"	3	11'-1"	3	11'-6"	3
	6	600HDS300-33	33 (20)	33	3	7'-6"	3	8'-6"	3	9'-3"	2	7'-6"	3	8'-6"	3	9'-3"	2
		600HDS300-43	43 (18)	33	3	10'-1"	2	10'-5"	2	10'-10"	2	10'-1"	2	10'-5"	2	10'-10"	2
		600HDS300-54	54 (16)	50	3	10'-7"	2	11'-0"	2	11'-5"	2	10'-7"	2	11'-0"	2	11'-5"	2
		600HDS300-68	68 (14)	50	3	11'-2"	2	11'-7"	2	12'-0"	2	11'-2"	2	11'-7"	2	12'-0"	2
		600HDS300-97	97 (12)	50	3	12'-1"	3	12'-6"	3	13'-0"	3	12'-1"	3	12'-6"	3	13'-0"	3

Span notes: (Reference number shown to the right of spans)
1 Use 20ga (33mil) HDSC™ Clip with a 4/4 screw pattern.
2 Use 16ga (68mil) HDSC™ Clip with a 4/4 screw pattern
3 Use 12ga (97mil) HDSC™ Clip with a 4/4 screw pattern.

Notes:
1 All headers require the attachment of the HDSC™ Clip at each end with headers installed open side up.
2 Recommended HDSC™ Clip attachments above are based on the jamb stud thickness being equal to or greater than header thickness.
3 Header framing was calculated with a sill height of 0" for worst case design.
4 Section properties are based on the AISI S100-16 (2020) w/S2-20.
5 Increase strength in cold work of forming was used per AISI S100 section A3.3.2
6 For deflection calculations, the effective moment of inertia was used. Reference the AISI S100 commentary B5
7 On interior framing, lateral deflection calculations are based on using 1.0 times the interior lateral load.
8 Dead load deflection calculations are limited to L/240 or 0.5" max. deflection.
9 For Wall Dead Load calculations, 10psf is used for interior framing and 12psf is used for exterior framing
10 Header lengths should be ordered 1/2" shorter to fit inside clips. Listed capacities are based on a maximum gap between the clip and the end of the header of 1/4".
11 Spans listed are based on unpunched members
12 Span tables are based on ASD load capacities for the HDSC clip.

Allowable HDS® Header Spans for Window and Door Openings — Interior Span Chart

Wall Height (ft)	Wall Size (in)	Member	Mils (Gauge)	Yield Strength, Fy (ksi)	Flange (in)	Interior Allowable Spans: Lateral Load (psf) = 5, Dead Load (psf) = 10; Strong Axis Deflection Targets; Opening Heights: L/120				L/240				L/360			
						7		8		9		7		8		9	
9	3-5/8	362HDS300-33	33 (20)	33	3	11'-3"	1	13'-0"	1	–		11'-3"	1	13'-0"	1	–	
		362HDS300-43	43 (18)	33	3	12'-8"	2	15'-1"	2	–		12'-8"	2	15'-0"	2	–	
		362HDS300-54	54 (16)	50	3	13'-5"	2	16'-0"	2	–		13'-5"	2	16'-0"	2	–	
		362HDS300-68	68 (14)	50	3	14'-1"	2	16'-0"	2	–		14'-1"	2	16'-0"	2	–	
		362HDS300-97	97 (12)	50	3	15'-2"	3	16'-0"	3	–		15'-2"	3	16'-0"	3	–	
	6	600HDS300-33	33 (20)	33	3	13'-3"	1	15'-9"	1	–		13'-3"	1	15'-9"	1	–	
		600HDS300-43	43 (18)	33	3	14'-3"	2	17'-0"	2	–		14'-3"	2	17'-0"	2	–	
		600HDS300-54	54 (16)	50	3	15'-0"	2	17'-11"	2	–		15'-0"	2	17'-11"	2	–	
		600HDS300-68	68 (14)	50	3	15'-10"	2	18'-10"	2	–		15'-10"	2	18'-10"	2	–	
		600HDS300-97	97 (12)	50	3	17'-1"	3	20'-0"	3	–		17'-1"	3	20'-0"	3	–	
11	3-5/8	362HDS300-33	33 (20)	33	3	9'-0"	1	9'-10"	1	11'-0"	1	9'-0"	1	9'-10"	1	11'-0"	1
		362HDS300-43	43 (18)	33	3	10'-6"	2	11'-6"	2	12'-8"	2	10'-6"	2	11'-6"	2	12'-8"	2
		362HDS300-54	54 (16)	50	3	11'-3"	2	12'-1"	2	13'-5"	2	11'-3"	2	12'-1"	2	13'-5"	2
		362HDS300-68	68 (14)	50	3	11'-10"	2	12'-9"	2	14'-1"	2	11'-10"	2	12'-9"	2	14'-1"	2
		362HDS300-97	97 (12)	50	3	12'-9"	3	13'-8"	3	15'-2"	3	12'-9"	3	13'-8"	3	15'-2"	3
	6	600HDS300-33	33 (20)	33	3	11'-0"	2	12'-0"	1	13'-3"	1	11'-0"	2	12'-0"	1	13'-3"	1
		600HDS300-43	43 (18)	33	3	12'-0"	2	12'-10"	2	14'-3"	2	12'-0"	2	12'-10"	2	14'-3"	2
		600HDS300-54	54 (16)	50	3	12'-8"	2	13'-7"	2	15'-0"	2	12'-8"	2	13'-7"	2	15'-0"	2
		600HDS300-68	68 (14)	50	3	13'-4"	2	14'-4"	2	15'-10"	2	13'-4"	2	14'-4"	2	15'-10"	2
		600HDS300-97	97 (12)	50	3	14'-5"	3	15'-6"	3	17'-1"	3	14'-5"	3	15'-6"	3	17'-1"	3
13	3-5/8	362HDS300-33	33 (20)	33	3	7'-9"	1	8'-3"	1	9'-0"	1	7'-9"	1	8'-3"	1	9'-0"	1
		362HDS300-43	43 (18)	33	3	9'-0"	2	9'-7"	2	10'-4"	2	9'-0"	2	9'-7"	2	10'-4"	2
		362HDS300-54	54 (16)	50	3	10'-2"	2	10'-8"	2	11'-3"	2	10'-2"	2	10'-8"	2	11'-3"	2
		362HDS300-68	68 (14)	50	3	10'-8"	2	11'-2"	2	11'-10"	2	10'-8"	2	11'-2"	2	11'-10"	2
		362HDS300-97	97 (12)	50	3	11'-6"	3	12'-1"	3	12'-9"	3	11'-6"	3	12'-1"	3	12'-9"	3
	6	600HDS300-33	33 (20)	33	3	9'-4"	2	10'-0"	2	10'-10"	2	9'-4"	2	10'-0"	2	10'-10"	2
		600HDS300-43	43 (18)	33	3	10'-10"	2	11'-4"	2	12'-0"	2	10'-10"	2	11'-4"	2	12'-0"	2
		600HDS300-54	54 (16)	50	3	11'-5"	2	12'-8"	2	13'-5"	2	11'-5"	2	12'-8"	2	13'-5"	2
		600HDS300-68	68 (14)	50	3	12'-0"	2	12'-7"	2	13'-4"	2	12'-0"	2	12'-7"	2	13'-4"	2
		600HDS300-97	97 (12)	50	3	13'-0"	3	13'-7"	3	14'-5"	3	13'-0"	3	13'-7"	3	14'-5"	3
15	3-5/8	362HDS300-33	33 (20)	33	3	6'-10"	2	7'-3"	2	7'-8"	2	6'-10"	2	7'-3"	2	7'-8"	2
		362HDS300-43	43 (18)	33	3	8'-0"	2	8'-5"	2	8'-11"	2	8'-0"	2	8'-5"	2	8'-11"	2
		362HDS300-54	54 (16)	50	3	9'-3"	2	9'-9"	2	10'-2"	2	9'-3"	2	9'-9"	2	10'-2"	2
		362HDS300-68	68 (14)	50	3	10'-0"	2	10'-3"	2	10'-8"	2	10'-0"	2	10'-3"	2	10'-8"	2
		362HDS300-97	97 (12)	50	3	10'-8"	3	11'-1"	3	11'-6"	3	10'-8"	3	11'-1"	3	11'-6"	3
	6	600HDS300-33	33 (20)	33	3	7'-6"	3	8'-6"	3	9'-3"	2	7'-6"	3	8'-6"	3	9'-3"	2
		600HDS300-43	43 (18)	33	3	10'-1"	2	10'-5"	2	10'-10"	2	10'-1"	2	10'-5"	2	10'-10"	2
		600HDS300-54	54 (16)	50	3	10'-7"	2	11'-0"	2	11'-5"	2	10'-7"	2	11'-0"	2	11'-5"	2
		600HDS300-68	68 (14)	50	3	11'-2"	2	11'-7"	2	12'-0"	2	11'-2"	2	11'-7"	2	12'-0"	2
		600HDS300-97	97 (12)	50	3	12'-1"	3	12'-6"	3	13'-0"	3	12'-1"	3	12'-6"	3	13'-0"	3

Span notes: (Reference number shown to the right of spans)
1 Use 20ga (33mil) HDSC™ Clip with a 4/4 screw pattern.
2 Use 16ga (68mil) HDSC™ Clip with a 4/4 screw pattern
3 Use 12ga (97mil) HDSC™ Clip with a 4/4 screw pattern.

Notes:
1 All headers require the attachment of the HDSC™ Clip at each end with headers installed open side up.
2 Recommended HDSC™ Clip attachments above are based on the jamb stud thickness being equal to or greater than header thickness.
3 Header framing was calculated with a sill height of 0" for worst case design.
4 Section properties are based on the AISI S100-16 (2020) w/S2-20.
5 Increase strength in cold work of forming was used per AISI S100 section A3.3.2
6 For deflection calculations, the effective moment of inertia was used. Reference the AISI S100 commentary B5
7 On interior framing, lateral deflection calculations are based on using 1.0 times the interior lateral load.
8 Dead load deflection calculations are limited to L/240 or 0.5" max. deflection.
9 For Wall Dead Load calculations, 10psf is used for interior framing and 12psf is used for exterior framing
10 Header lengths should be ordered 1/2" shorter to fit inside clips. Listed capacities are based on a maximum gap between the clip and the end of the header of 1/4".
11 Spans listed are based on unpunched members
12 Span tables are based on ASD load capacities for the HDSC clip.

Allowable HDS® Header Spans for Window and Door Openings — Interior Span Chart

Wall Height (ft)	Wall Size (in)	Member	Mils (Gauge)	Yield Strength, Fy (ksi)	Flange (in)	Interior Allowable Spans: Lateral Load (psf) = 5, Dead Load (psf) = 10; Strong Axis Deflection Targets; Opening Heights: L/120				L/240				L/360			
						7		8		9		7		8		9	
9	3-5/8	362HDS300-33	33 (20)	33	3	11'-3"	1	13'-0"	1	–		11'-3"	1	13'-0"	1	–	
		362HDS300-43	43 (18)	33	3	12'-8"	2	15'-1"	2	–		12'-8"	2	15'-0"	2	–	
		362HDS300-54	54 (16)	50	3	13'-5"	2	16'-0"	2	–		13'-5"	2	16'-0"	2	–	
		362HDS300-68	68 (14)	50	3	14'-1"	2	16'-0"	2	–		14'-

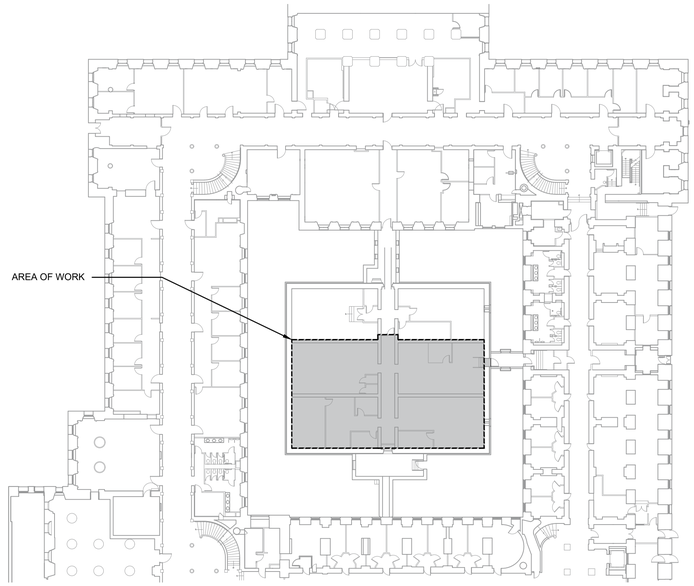

KEYPLAN - FIRST FLOOR

NO SCALE

GENERAL REQUIREMENTS

1. REFER TO THE SPECIFICATIONS FOR ADDITIONAL REQUIREMENTS OF THIS PROJECT.

2. BID PHASE:
   IT IS THE CONTRACTOR'S RESPONSIBILITY TO REVIEW ALL DOCUMENTS TO INCLUDE PLANS AND SPECIFICATIONS FOR THE ARCHITECTURAL AND OTHER WORK UNDER OTHER DIVISIONS THAT CAN AFFECT THE WORK OF THIS DIVISION. THE CONTRACTOR SHALL ISSUE A FORMAL REQUEST FOR INFORMATION FOR CLARIFICATIONS OF ANY DISCREPANCIES IN THE DOCUMENTS PRIOR TO FINAL BID SUBMISSION.

3. PRE-CONSTRUCTION:
   IT IS THE CONTRACTOR'S RESPONSIBILITY TO REVIEW ALL REVISED DOCUMENTS TO INCLUDE ARCHITECTURAL PLANS AND WORK UNDER OTHER DIVISIONS THAT CAN AFFECT THE WORK OF THIS DIVISION. THIS INCLUDES REVIEW OF ALL ADDENDUMS, REVISIONS AND SHOP DRAWINGS THAT AFFECT THE WORK OF THIS DIVISION. THE CONTRACTOR SHALL NOTIFY THE A/E TEAM OF ANY DISCREPANCIES PRIOR TO FINAL ROUGH-IN.

SPECIAL CONDITIONS

A. DEMOLITION COORDINATION:

1. REFER TO ARCHITECTURAL DEMOLITION PLANS FOR ADDITIONAL DEMOLITION REQUIREMENTS.

2. REFER TO ARCHITECTURAL PLANS AND/OR SUPPLEMENTAL DOCUMENTS FOR CONSTRUCTION PHASE SEQUENCE REQUIREMENTS FOR OCCUPIED SPACES AFFECTED BY THE WORK.

3. NOTIFY THE LANDLORD OF ANY WORK THAT MAY DISRUPT OTHER AREAS OUTSIDE OF THE WORK AREA.

B. EQUIPMENT COORDINATION:

1. REFER TO ARCHITECTURAL EQUIPMENT PLANS, FURNITURE PANS, ELEVATIONS, CASEWORK ELEVATIONS AND OTHER RELATED PLANS FOR ADDITIONAL MEP PROVISIONS.

MECHANICAL SYMBOL LIST

SYMBOL	DESCRIPTION
D	DUCT DROP
R	DUCT RISE
M	MOTOR OPERATED DAMPER
	SUPPLY AIR DEVICE. ARROWS INDICATE DIRECTION OF AIRFLOW
	MANUAL VOLUME DAMPER - M.V.D.
S.D.	SMOKE DAMPER, S.D.
F.D.	FIRE DAMPER, F.D.
F.D./S.D.	COMBINATION FIRE/ SMOKE DAMPER
	CONICAL TEE
	BRANCH DUCT WITH 45 CLINCH COLLAR CONNECTION TO MAIN TRUNK DUCT
	RECTANGULAR TURN W/ TURNING VANES
	FLEXIBLE ROUND DUCT
	RIGID ROUND DUCT
T	THERMOSTAT
EX or (E)	EXISTING
SA	SUPPLY AIR
FCU	FAN COIL UNIT
CFM	CUBIC FEET PER MINUTE
EA	EXHAUST AIR
OA	OUTSIDE AIR
OED	OPEN END DUCT
RA	RETURN AIR
AFF	ABOVE FINISHED FLOOR
CD	CLEARWATER DRAIN
M1	PLAN NOTE REFERENCE SYMBOL
	REMOVE FROM EXISTING
	CONNECT TO EXISITNG
	LINE BREAK

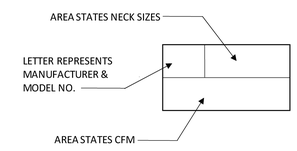

AIR DEVICE DESIGNATION

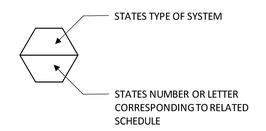

MECHANICAL EQUIPMENT DESIGNATION

MERIDIEN GROUP

MERIDIEN GROUP, LLC
208 SOUTH KING ST. SUITE 303
LEESBURG, VA 20175
(703) 777-8285
www.meridiengroupllc.com

CITADEL
ARCHITECTURE | HISTORIC PRESERVATION | PLANNING | DESIGN

CERTIFICATIONS

KEY PLAN

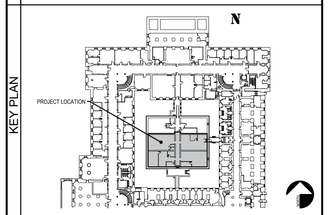

REVISION NOTES

MARK	DATE	DESCRIPTION

GRAPHIC SCALE

CAUTION: IF THIS DRAWING IS A REDUCTION THIS GRAPHIC SCALE MUST BE USED

CONTRACTORS	
A/E CON. NO.	
A/E TASK NO.	
CONS. CONTR	
CONS. WORK	
PRIME A/E	MERIDIEN GROUP / CITADEL DCA
SUB A/E	

BUILDING	
NAME	
STREET	
CITY/ST./ZIP	WASHINGTON, DC
BUILDING NO.	DC-
OTHER BUILDING NOs.	
FACILITY CODE	

PROJECT	
PROJECT TITLE	FEDERAL OFFICE BUILDING MT 1125 OFFICE RENOVATION
PROJECT DESCRIPTION	RENOVATION OF FIRST FLOOR SUITE AND UPGRADE SECURITY
PROJECT NO.	MT1125_26_005
GSA PM	BARBARA CHOATE
SUBMISSION	100% SUBMISSION FOR REVIEW REV-2
SUB. DATE	05 JUNE 2026

DRAWING	
DRAWING TITLE	
FILE NAME	
FLOOR NO.	1ST FLOOR
DRAWN BY	SRBR DATE DRAFTED: 06/16/2026
CHECKED BY	CWR/PTL SHEET SIZE: 24 x 36
DRAWING NO.	VAULT 1505 COVER SHEET MECHANICAL
M-001	DISCIPLINE SHEET TYPE SEQUENCE
	SHEET ?? OF 21

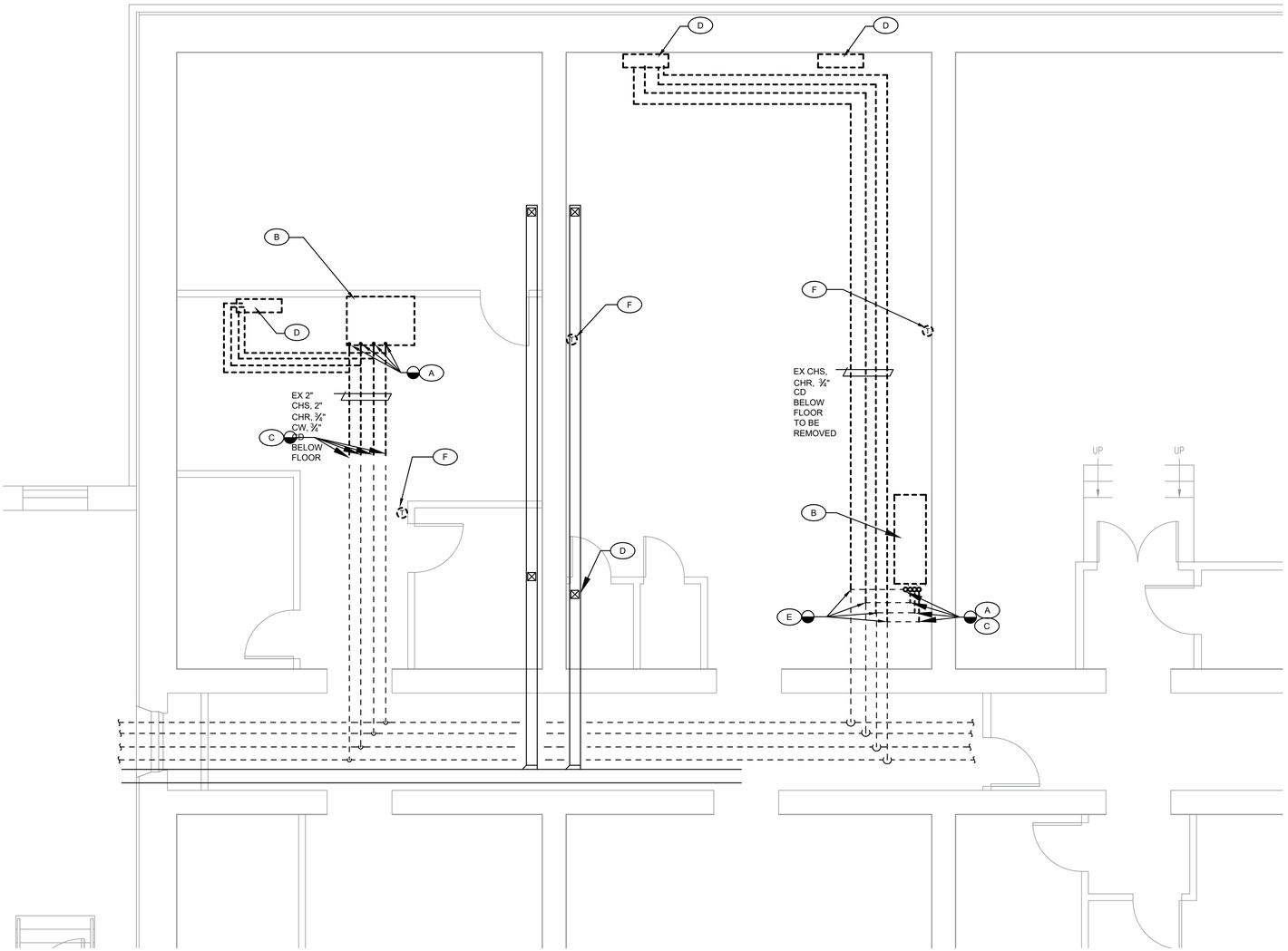

VAULT 1505 PLAN - MECHANICAL DEMOLITION

SCALE: 1/4" = 1'-0"

0 1' 2' 4' 8'

DEMOLITION PLAN NOTES

- (A) CUT EXISTING PIPES AT LOCATION INDICATED AND REMOVE BACK TO EXISTING CRAC UNIT
- (B) REMOVE EXISTING CRAC UNIT ENTIRELY INCLUDING UNIT, DUCTWORK, SUPPORTS, CONTROLS AND POWER.
- (C) PREPARE PIPE LINES FOR C0NNECTION TO NEW WORK. SEE M102 FOR CONTINUATION
- (D) REMOVE EXISTING FAN COIL UNIT ALONG WITH ALL PIPING, POWER, CONTROLS AND SUPPORTS.
- (E) CUT EXISTING BRANCH PIPES AT LOCATIONS INDICATED AND REMOVE BACK TO EXISTING FAN COIL UNIT

MERIDIEN GROUP

MERIDIEN GROUP, LLC
208 SOUTH KING ST. SUITE 303
LEESBURG, VA 20175
(703) 777-8285
www.meridiengroupllc.com

DCA CITADEL
ARCHITECTURE | HISTORIC PRESERVATION | PLANNING | DESIGN

CERTIFICATIONS

KEY PLAN

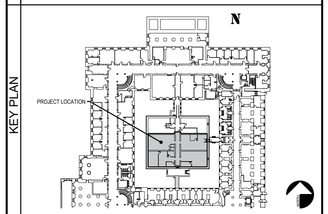

REVISION NOTES

MARK	DATE	DESCRIPTION

GRAPHIC SCALE

CAUTION: IF THIS DRAWING IS A REDUCTION THIS GRAPHIC SCALE MUST BE USED

CONTRACTORS	A/E CON. NO.	
	A/E TASK NO.	
	CONS. CONTR	
	CONS. WORK	
	PRIME A/E	MERIDIEN GROUP / CITADEL DCA
	SUB A/E	
BUILDING	NAME	
	STREET	
	CITY/ST./ZIP	WASHINGTON, DC
	BUILDING NO.	DC-
	OTHER BUILDING NOs.	
	FACILITY CODE	
PROJECT	PROJECT TITLE	FEDERAL OFFICE BUILDING MT 1125 OFFICE RENOVATION
	PROJECT DESCRIPTION	RENOVATION OF FIRST FLOOR SUITE AND UPGRADE SECURITY
	PROJECT NO.	MT1125_26_005
	GSA PM	BARBARA CHOATE
	SUBMISSION	100% SUBMISSION FOR REVIEW REV-2
	SUB. DATE	05 JUNE 2026
DRAWING	DRAWING TITLE	
	FILE NAME	
	FLOOR NO.	1ST FLOOR
	DRAWN BY	SRBR DATE DRAFTED: 06/16/2026
	CHECKED BY	CWR/PTL SHEET SIZE: 24 x 36
	DRAWING NO. M-101	VAULT 1505 DEMOLITION MECHANICAL
		DISCIPLINE SHEET TYPE SEQUENCE
		SHEET ?? OF 21

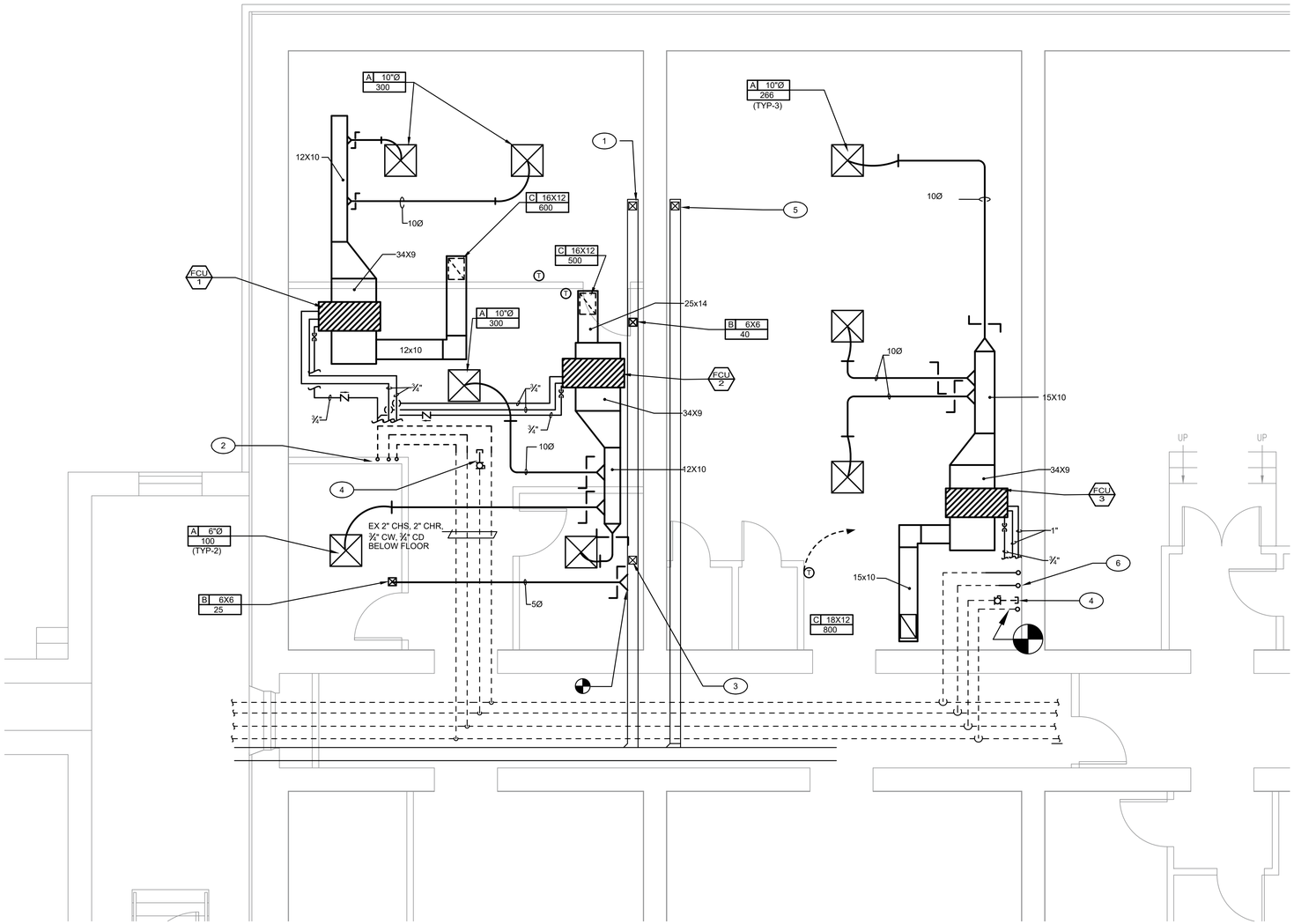

VAULT 1505 PLAN - MECHANICAL NEW WORK

SCALE: 1/4" = 1'-0"

0 1' 2' 4' 8'

PLAN NOTES

1. BALANCE VENTILATION SUPPLY REGISTER TO 100 CFM
2. ¾" CHS, ¾" CHR, ¾" CD PIPES UP IN WALL TO ABOVE CEILING
3. BALANCE EXISTING AIR DEVICE TO 25 CFM
4. VALVE AND CAP EXISTING COLD WATER PIPE
5. BALANCE EXISTING AIR DEVICE TO 100 CFM
6. 1" CHS, CHR AND ¾" CD UP ON WALL TO ABOVE CEILING. ENCLOSE PIPES IN A WALL CHASE OR BREAK-METAL ENCLOSURE. CONSULT THE ARCHITECT FOR PREFERRED FINISH MATERIALS

GENERAL NOTES

1. INSTALL DUCTWORK AND FAN COIL UNITS TIGHT TO UNDERSIDE OF FLOOR ABOVE. COORDINATE WITH EXISTING CONDITIONS,M LIGHTS, SPRINKLER PIPE, CONDUIT, ETC.
2. DIFFUSERS SHALL BE SET IN EXISTING LAY-0IN TILE CEILING. THEY SHALL BE SET SYMMETRIC USING THE GENERAL LAYOUT SHOWN
3. PROVIDE NEW CONTROLS TIED TO THE EXISTING BUILDING-WIDE EMS SYSTEM. UPDATE EXISTING FRONT-END GRAPHICS TO SHOW THE NEW EQUIPMENT AND TO REMOVE THE DEMOLISHED EQUIPMENT.

MERIDIEN GROUP

MERIDIEN GROUP, LLC
208 SOUTH KING ST. SUITE 303
LEESBURG, VA 20175
(703) 777-8285
www.meridiengroupllc.com

CITADEL DCA
ARCHITECTURE | HISTORIC PRESERVATION | PLANNING | DESIGN

CERTIFICATIONS

KEY PLAN

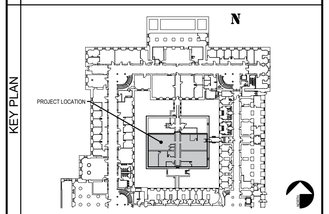

REVISION NOTES

MARK	DATE	DESCRIPTION

GRAPHIC SCALE

CAUTION: IF THIS DRAWING IS A REDUCTION THIS GRAPHIC SCALE MUST BE USED

CONTRACTORS	A/E CON. NO.	
	A/E TASK NO.	
	CONS. CONTR	
	CONS. WORK	
	PRIME A/E	MERIDIEN GROUP / CITADEL DCA
	SUB A/E	
BUILDING	NAME	
	STREET	
	CITY/ST./ZIP	WASHINGTON, DC
	BUILDING NO.	DC-
	OTHER BUILDING NOs.	
	FACILITY CODE	
PROJECT	PROJECT TITLE	FEDERAL OFFICE BUILDING MT 1125 OFFICE RENOVATION
	PROJECT DESCRIPTION	RENOVATION OF FIRST FLOOR SUITE AND UPGRADE SECURITY
	PROJECT NO.	MT1125_26_005
	GSA PM	BARBARA CHOATE
	SUBMISSION	100% SUBMISSION FOR REVIEW REV-2
	SUB. DATE	05 JUNE 2026
DRAWING	DRAWING TITLE	
	FILE NAME	
	FLOOR NO.	1ST FLOOR
	DRAWN BY	SRBR DATE DRAFTED: 06/16/2026
	CHECKED BY	CWR/PTL SHEET SIZE: 24 x 36
	DRAWING NO. M-102	VAULT 1505 NEW WORK MECHANICAL
		DISCIPLINE SHEET TYPE SEQUENCE
		SHEET ?? OF 21

TWO-PIPE FAN COIL UNIT WITH ELECTRIC HEAT SCHEDULE

Tag	Manufacturer and Model Number	Unit Type	Voltage	MCA	Motor FLA	CFM	ESP	Cooling Coil								Electric Heat				Remarks
								EWT °F	LWT °F	GPM	Water PD	Total BTUH	Sensible BTUH	LDB °F	LWB °F	KW	Total BTUH	EAT °F	LAT °F	
FCU-1	Daikin FCHH206	Horizontal Ducted	277-1-60	14.7	2.3	600	0.25	44	57	3.5	6"	21084	15462	56.4	55.8	2.5	8530	70	82.6	Provide auxiiary drain pan with high water cut-out, filter, thermostat
FCU-2	Daikin FCHH206	Horizontal Ducted	277-1-60	14.7	2.3	600	0.25	44	57	3.5	6"	21084	15462	56.4	55.8	2.5	8530	70	82.6	Provide auxiiary drain pan with high water cut-out, filter, thermostat
FCU-3	Daikin FCHH208	Horizontal Ducted	277-1-60	29.3	4.6	1400	0.25	43	55	10.58	10.86	63500	41700	52	51.8	5	17060	70	85.1	Provide auxiiary drain pan with high water cut-out, filter, thermostat

MECHANICAL SPECIFICATIONS

1. Furnish and install a complete and operational system in accordance with drawings and these specifications. Provide all materials whether specified or not for a complete and operational system that complies with all required codes and standards. All materials and equipment shall be installed in accordance with the manufacturer's instructions and all applicable codes and standards. Equipment shall be installed complete including power, controls, supports, etc. Equipment and associated controls shall be functionally tested in all operating modes. All equipment and materials shall be new unless otherwise indicated.
2. The contractor shall be responsible for visiting the site prior to bid and becoming familiar with all existing conditions that may affect his work. The contractor shall include in his bid any required labor and materials necessary to modify, remove or relocate existing work to allow for the new work to be installed. If the contactor believes the new work cannot be installed as shown in the drawings, he shall inform the project construction manager immediately. There shall be no additional compensation for failure to include coordination with existing conditions in the scope and cost.
3. All work shall be done in accordance with applicable building, mechanical, plumbing, electrical and energy codes and standards. These include, but are not limited to the latest International Building Code (IBC), International Mechanical Code (IMC), International Plumbing Code (IPC), International Fuel Gas Code (IFGC), National Fire Protection Association (NFPA), American Society of Refrigeration and Air Conditioning Engineers (ASHRAE), Sheet Metal and Air Conditioning Contractors National Association (SMACNA), National Electrical Code ASME CSD-1.
4. The contractor shall maintain a competent superintendent on site at all times who will oversee all work and ensure the construction is done in a safe, clean and professional manner. He shall ensure the work is done in accordance with the project specifications, all layout is correct and accurate and the quality of the workmanship meets or exceed industry standards. He shall also verify all manufacturer instructions are being followed for installation and setup.
5. The contractor shall submit equipment shop drawings for all major equipment and materials including, but not limited to Computer Room AC units, pipe, valves and insulation. Shop drawings shall indicate materials, dimensions, weights, performance data and warranty information. Equipment shall be as scheduled on the drawings. Alternate manufacturers may be considered provided they meet or exceed the scheduled performance data and are of equal or better quality. Alternate equipment must fit within the allotted space.
6. The contractor shall maintain a set of as-built documents on site at all times. The drawings shall maintain red-line markup of all deviations from the deign documents and include pertinent information such as critical dimensions and elevations.
7. All new equipment and materials shall be reviewed by the contractor before ordering to ensure the equipment will fit in the given space, is suitable for the location, arrangement of duct, piping, etc, and can be serviced once installed. All required service access space shall be maintained and room shall be provided to remove filters and manipulate valves and dampers. Verify equipment electrical characteristics meet the existing available power.
8. The new unit shall be labeled with a phenolic engraved plate that lists the unit ID number, Airflow, Quantity of motors, Motor HP, Motor Amperage, Voltage/Phase, quantity of filters and sizes, chilled water flow in gpm.
9. Computer Room AC units shall be started and tested by a certified representative of the manufacturer. All other equipment shall be started and tested by the installing contractor. The equipment shall be tested in all modes of operation. All operating set points shall be programmed in coordination with the building operating staff. Verify all peripheral components including, but not limited to, control valves, sensors, interlocks, etc operate as intended and specified. The contractor shall provide a one year parts and labor warranty starting from the date the project is accepted and considered substantially complete by the engineer. At the time the equipment is turned over to the owner, all units shall have clean filters.
10. All new air and hydronic systems shall be balanced by a third-party firm certified by AABC or NEBB. Test and balance all fans and the computer room AC unit. All airflows and water flows shall be set to within 10% of that prescribed on the drawings. Submit to the engineer of record a Test and Balance report at the completion of the project indicating information about each piece of equipment and each system. Provide equipment operating data, and individual supply outlet measurement.
11. Ductwork shall be constructed to SMACNA standards for low pressure duct (2" wc) and made with galvanized sheet steel, minimum 26 gage. Duct joints and fittings shall be sealed Class B. All joints and seems shall be taped or sealed using mastic material. The supply duct shall be externally wrapped with 1-1/2" thick fiberglass duct-wrap with foil face and integral vapor barrier.
12. Chilled water pipe and cold water pipe shall be type L copper with soldered fittings and joints. Pro-Press joints and fittings are also acceptable. Ball valve shall be of brass construction and full port with extended handles and a drain port placed on the unit side. Balance valves shall be brass construction and include test ports and memory stops. They shall be equal to "Xylem Circuit Setters". Chilled water pipe and cold water pipe shall be insulated with closed cell elastomeric preformed pipe insulation equal to "Armacell", ½" thick. All joints and plain ends shall be sealed with an appropriate sealant.
13. Condensate drain pipe shall be DWV or type L copper. Insulated with closed cell elastomeric preformed pipe insulation equal to "Armacell", ½" thick.
14. Fan Coil Units (FCU) shall be installed above the ceiling and shall come equipped with a drain pan that encompasses both the coil and the pipe connections. provide pipe valve package per the detail shown. Balance valve and all test ports shall be made accessible.

CONTROLS:

The fan coil unit shall be controlled by the building EMS system. The existing front end graphics shall be updated to remove the demolished equipment and show the new equipment. the EMS shall monitor space temperature and humidity, chilled water valve position discharge air temperature, fan status and electric heater status. The graphics shall show these same points along with the command signal and set points. provide alarms for high and low space temperature, high space humidity, fan failure, and electric heater failure. provide an occupancy schedule for each individual unit. The space temperature sensors shall have a manual override for occupancy for 2 hour period (adjustable) and a slide (or dial) to allow the occupant to adjust the space temperature set point +/- 2 degrees F. The contractor shall provide all components, wiring, labor and programming to accomplish the above control specifications.

Table 1: Summary Calculation Used to Determine Outdoor Air Ventilation Rates - Mechanically Ventilated

Reference - 2021 IMC

US TREASURY - VAULT 1505 & 1503

Zone Identification				2018 International Mechanical Code Compliance										
Room No.	Room Name	Occupancy Category	Area (sf)	People Outdoor Air Rate (cfm/ person)	Area Outdoor Air Rate (cfm/sf)	Occupant Load rate per Table 403.3 (#/1000sf)	Number of Occupants (#)	Breathing Zone Outdoor Air Flow Vbz (CFM)	*Table 403.3.1.2* Zone Air Distribution Effectiveness Ez	Zone Outdoor Air Flow Voz (CFM)	Zone Primary Air Flow Vpz (CFM)	Primary Outdoor Air Fraction Zp=Voz/ Vpz	Actual Primary Outdoor Air Fraction	Actual Zone Outdoor Air Flow Rate (CFM)	Meets Standard?
	Office 1505A	office space	85	5.00	0.06	5.00	1	10	1	10	25	0.40	1.00	25	Y
	Office 1505C	office space	78	5.00	0.06	5.00	1	10	1	10	25	0.39	1.00	25	Y
	Conference Rm 1505B	Conference	262	5.00	0.06	50.00	13	81	1	81	100	0.81	1.00	100	Y
	Open Office	office space	333	5.00	0.06	5.00	2	30	1	30	40	0.75	1.00	40	Y
	1503 Open Office	office space	806	5.00	0.06	5.00	9	93	1	93	100	0.93	1.00	100	Y

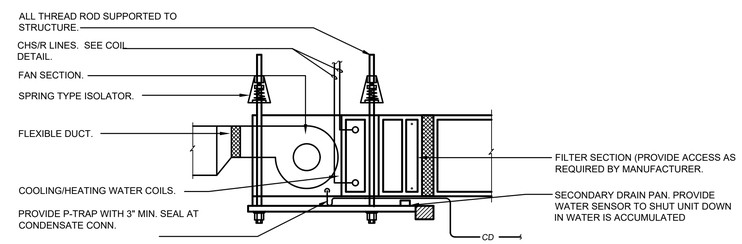

FAN COIL UNIT INSTALLATION DETAIL

NO SCALE

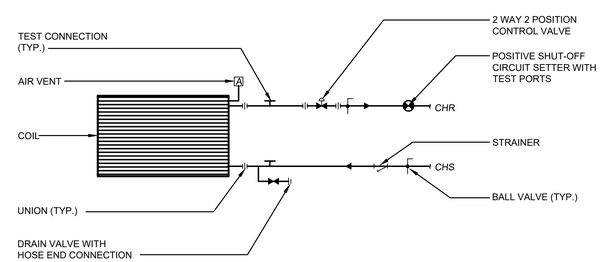

CHILLED WATER COIL CONNECTION DETAIL HORIZONTAL CONCEALED FAN COIL UNITS

NO SCALE

MERIDIEN GROUP

MERIDIEN GROUP, LLC
208 SOUTH KING ST. SUITE 303
LEESBURG, VA 20175
(703) 777-8285
www.meridiengroupllc.com

CITADEL
ARCHITECTURE | HISTORIC PRESERVATION | PLANNING | DESIGN

CERTIFICATIONS

KEY PLAN

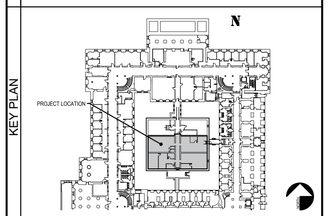

REVISION NOTES

MARK	DATE	DESCRIPTION

GRAPHIC SCALE

CAUTION: IF THIS DRAWING IS A REDUCTION THIS GRAPHIC SCALE MUST BE USED

CONTRACTORS	A/E CON. NO.	
	A/E TASK NO.	
	CONS. CONTR	
	CONS. WORK	
	PRIME A/E	MERIDIEN GROUP / CITADEL DCA
	SUB A/E	
BUILDING	NAME	
	STREET	
	CITY/ST./ZIP	WASHINGTON, DC
	BUILDING NO.	DC-
	OTHER	
	BUILDING NOs.	
	FACILITY CODE	
PROJECT	PROJECT TITLE	FEDERAL OFFICE BUILDING MT 1125 OFFICE RENOVATION
	PROJECT DESCRIPTION	RENOVATION OF FIRST FLOOR SUITE AND UPGRADE SECURITY
	PROJECT NO.	MT1125_26_005
	GSA PM	BARBARA CHOATE
	SUBMISSION	100% SUBMISSION FOR REVIEW REV-2
	SUB. DATE	05 JUNE 2026
DRAWING	DRAWING TITLE	
	FILE NAME	
	FLOOR NO.	1ST FLOOR
	DRAWN BY	SRBR DATE DRAFTED: 06/16/2026
	CHECKED BY	CWR/PTL SHEET SIZE: 24 x 36
	DRAWING NO.	VAULT 1505 SCHEDULES AND DETAILS
	M-201	DISCIPLINE SHEET TYPE SEQUENCE
		SHEET ?? OF 21

ELECTRICAL SPECIFICATIONS

SECTION 16A - ELECTRICAL WORK

1. GENERAL:

A. The GENERAL and SPECIAL CONDITIONS listed under Division 1 shall govern this work where applicable.

B. The contractor shall furnish all labor, materials, equipment and services necessary for the construction of the complete functioning electrical system.

C. All labor and materials, although not specifically mentioned, but necessary for the completion of the work and the successful operation of the electrical systems, shall be as if specifically indicated.

D. Materials and equipment installed as part of the permanent installation shall be new unless otherwise indicated or specified, and shall be approved by the Underwriter's Laboratories, inc., for installation in each particular case where standard's have been established.

E. The project includes work with_in a secure space. All wiring to be surface mounted at SCIF perimeter, above raised floors or below drop ceiling. Exposed locations shall be pre-approved the architect prior to rough-in. Exposed wiring at finished areas shall be installed in conduit or surface metal raceway per architects approval. Exposed surfaces shall be primed and finish painted as directed.

2. SCOPE:

A. The Contractor shall provide all labor and materials required to install a completed system of electrical work as indicated on the drawings and/or herein specified. Work includes but is not limited to the following:

1. Power feeders and safety switches.
2. Final connections of mechanical equipment, electrical motors.

3. REGULATIONS AND CODE REQUIREMENTS:

A. All work shall conform to the requirements of the latest editions of the following codes, regulations and specifications.

1. National Electrical Code (NFPA 70)
2. National Fire Protection Association (NFPA)
3. Underwriters Laboratories, Inc.
4. Building Code
5. Local and state requirements

4. SHOP DRAWINGS:

A. The Contractor shall submit shop drawings (electronically) and manufacturer's catalog cuts showing all details of all equipment to be furnished.

5. GUARANTEE:

A. In addition to the guarantee obligations herein before specified in other divisions, the Contractor shall guarantee the system installation free from all mechanical and electrical defects for the period of one year from date of final acceptance by the Owner.

6. DRAWINGS AND SPECIFICATIONS:

A. The drawings are intended to show the general arrangement of the outlets and equipment. Door swings shall checked for arrangement of switches which shall be, installed on the latch side. Contractor shall check structural plans, mechanical plans and specifications so that he may coordinate his work with these trades.

7. GROUNDING:

A. Grounding of all conduit, panelboards, boxes, cabinets and equipment shall conform to the requirements of the latest edition of the National Electric Code.

B. All branch circuits shall include a bonded raceway and conductor. Equipment ground per NFPA 70, article 250 in addition to tick marks indicated on wiring.

8. DISTRIBUTION EQUIPMENT:

A. Not Applicable.

9. EQUIPMENT CONNECTIONS AND MOTOR STARTERS:

A. All power wiring shall be installed and connected under this section, unless already provided by on the equipment.

10. CONDUCTORS:

A. All secondary conductors shall be copper, 98% conductivity covered with 600 volt standard type THW or THHN Insulation. AWG size shall be per NFPA 70 or larger where indicated on the plans.

B. All wiring shall be in strict accordance with the latest edition of the National Electrical Code.

C. All wire number 8 and larger shall be stranded.

D. A color coding system shall be used throughout the building network of feeders and circuits and used as a basis of balancing the load within 10%.

E. Neutral conductors for isolated ground circuits shall be dedicated or sized 1.73 times larger for shared neutral circuits.

F. Upon completion of branch circuit wiring, the Contractor shall check and adjust circuit breaker arrangements to assure system load balance is within +10% or -10% across all three phases.

11. WIRING METHODS:

A. Branch circuit and feeders rated shall be conductors ran in conduit.

B. Conduit and wire sizes shall be per NFPA 70 or larger as indicated on the plans.

C. Type MC Cable is acceptable for branch circuits, in concealed areas or utility rooms

12. OUTLET BOXES:

A. Outlet boxes in concealed locations shall be galvanized stamped steel of sizes required by the NEC.

B. Boxes in exposed locations shall be cast, with gasketed cover.

C. Provide covers for all boxes.

13. PULL-BOXES AND JUNCTION BOXES:

A. Pull-boxes shall be provided as shown or wherever required to facilitate pulling of wires and cables, or as junction points. All such boxes shall be installed in accessible locations.

B. All pull boxes with-In SCIF must be able to be secured/locked or visible seal attached to detect the box has been opened.

14. WIRING DEVICES:

A. 20 AMP rated receptacles shall be used for all dedicated 20 AMP circuit connections per NFPA 70 requirements.

15. LIGHTING FIXTURES:

A. Not Applicable.

SECTION 16B - DEMOLITION WORK

1. SCOPE:

A. Material and equipment made superfluous by reason of the new work shall become the property of the contractor and shall be removed from the site unless the equipment is specifically indicated to be retained by the Owner, in which case the contractor shall disconnect & remove the equipment and return to the Owner.

B. The contractor shall furnish all labor, material and equipment necessary to complete the demolition work.

C. The work shall include removal and relocation of existing equipment as shown on the drawings.

2. SITE VISIT:

A. Prior to preparing the bid, the contractors shall visit the site and familiarize themselves with all existing conditions. Make all necessary investigations as to locations of utilities and all other matters which can affect the work. No additional compensation will be made to the contractor as a result of failure to get familiar with the existing conditions under which the work must be performed.

3. OUTAGES:

A. All electrical/telephone service work which will interfere with the normal use of occupied areas in any manner, shall be done at such times as shall be mutually agreed upon by the Contractor and the Owner.

B. Unless otherwise specified, outages any services, required for the performance of this contract and affecting areas other than the immediate work area shall be scheduled at least tHIRTY (30) days in advance. All such outages shall be performed on other than normal duty hours.

C. Outages during business hours must be approved by the treasury prior to commencement of the work.

4. CUTTING AND PATCHING:

A. Cutting and patching are not anticipated for this scope of work.

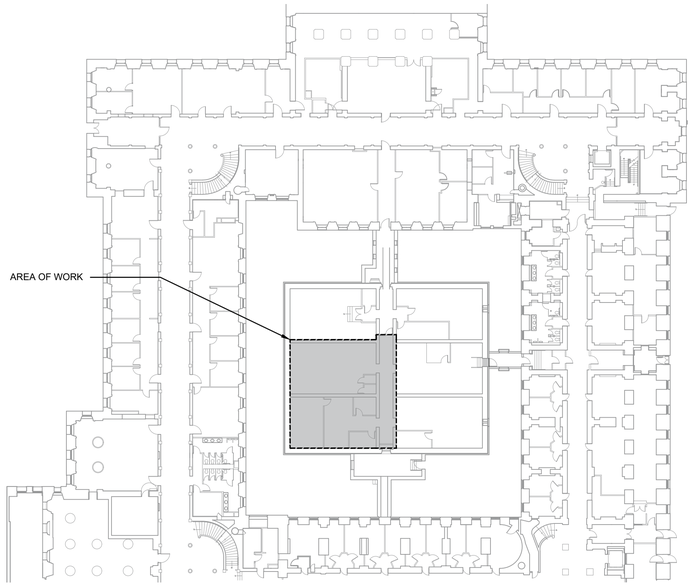

KEYPLAN - FIRST FLOOR

NO SCALE

ELECTRICAL SYMBOL LIST

SYMBOL	DESCRIPTION
(J), (J)	JUNCTION OR PULL BOX - CEILING, WALL MOUNTED. SIZE PER N.E.C. UNLESS NOTED OTHERWISE.
⊠	CONTROL EQUIPMENT
———	WIRING CONCEALED ABOVE CEILING OR IN WALL (INSULATED CONDUCTOR CONFIGURATION AS REQUIRED AND GROUND PER CODE) (5).
– – – –	WIRING BELOW GRADE OR BELOW FINISHED SLAB (INSULATED CONDUCTOR CONFIGURATION AS REQUIRED AND GROUND PER CODE) (5).
,	ELECTRICAL PANEL: 120/208 VOLT - SURFACE, RECESSED MOUNTED
,	ELECTRICAL PANEL: 277/480 VOLT - SURFACE, RECESSED MOUNTED
(1)	PLAN NOTE - REFER TO NOTES ON DRAWING.
⬡	EQUIPMENT CONNECTION NOTE - SEE SCHEDULE.
▼	EQUIPMENT CONNECTION - PROVIDE LOCAL DISCONNECT AT UNIT W/FUSE PROTECTED WHERE REQUIRED (SEE EQUIPMENT PLANS AND SCHEDULES TO INCLUDE DOCUMENTS FOR EQUIPMENT PROVIDED UNDER OTHER DIVISIONS FOR CONNECTION REQUIREMENTS)
T	THERMAL MANUAL STARTER SWITCH
(E)	EXISTING TO REMAIN

SYMBOL NOTES

(1) PROVIDE GFCI OUTLET FOR EACH LOCATION INDICATED AND WHERE REQUIRED BY CODE. USE OF FEED THRU NEUTRAL/PROTECTION IS NOT ACCEPTABLE.

CIRCUIT CONNECTION LEGEND

[P3] ← INDICATES CIRCUIT SOURCE PANEL (TYPICAL FOR ROOM/SPACE)

2,3 ← INDICATES CIRCUITS TO BE CONNECTED (ADJACENT TO DEVICE)

ABBREVIATIONS

A	AMP,AMPERE (RATING AS INDICATED)
AFF	ABOVE FINISHED FLOOR (TO CENTERLINE UNO)
C, CDT	CONDUIT
C/B	CIRCUIT BREAKER
CFSS	COMBINATION FUSED STARTER SWITCH
ECB	ENCLOSED CIRCUIT BREAKER
G, GND	EQUIPMENT GROUND
FSS	FUSED SAFETY SWITCH
MCB	MAIN CIRCUIT BREAKER
MLO	MAIN LUGS ONLY
NEC	NATIONAL ELECTRICAL CODE (LATEST EDITION UNO)
NFSS	NON-FUSED SAFETY SWITCH
P	POLE
PC	PC/COMMUNICATION OUTLET
UNO	UNLESS NOTED OTHERWISE
V	VOLTAGE (RATING AS INDICATED)

DEMOLITION LEGEND

DESIGNATION	DESCRIPTION
(N)	NEW EQUIPMENT
(E)	EXISTING EQUIPMENT TO REMAIN
(R)	EXISTING EQUIPMENT RELOCATED
(X)	EXISTING EQUIPMENT TO BE REMOVED
(X/R)	EXISTING EQUIPMENT TO BE REMOVED AND RELOCATED

GENERAL REQUIREMENTS

1. REFER TO THE SPECIFICATIONS FOR ADDITIONAL REQUIREMENTS OF THIS PROJECT.
2. US DEPARTMENT OF TREASURY - PROJECT MANAGER (PM) TO REVIEW AND APPROVE THE WORK, SUPPLEMENTAL DOCUMENTS OR INSTRUCTIONS BY THE (PM) TO BE PART OF THE SCOPE OF WORK.

SPECIAL CONDITIONS

A. DEMOLITION COORDINATION:

1. NOTIFY THE (PM) OF ANY WORK THAT MAY DISRUPT OTHER AREAS OUTSIDE OF THE WORK AREA.

B. WIRING REQUIREMENTS:

1. WIRING METHOD SHALL BE AS REQUIRED PER CODE FOR BUILDING CONSTRUCTION TYPE AND EACH SPACE FUNCTION.
2. PROVIDE QUANTITY OF CONDUCTORS REQUIRED TO INCLUDE EQUIPMENT GROUNDING PER CODE. WIRING SHOWN ON PLAN FOR POWER AND SWITCH CONTROL CLARITY ONLY.
3. PROVIDE DEDICATED NEUTRAL CONDUCTOR FOR ALL RECEPTACLE AND LIGHTING CIRCUITS. NEUTRALS CAN BE SHARED FOR 20 AMP CIRCUITS ONLY IF OVERSIZED.
4. CONDUCTOR AWG SIZE SHALL BE AS REQUIRED BY CODE AND ADJUSTED FOR VOLTAGE DROP.

C. SCIF:

1. ALL WORK WITH-IN THE SPACE TO CONFORM TO SCIF AREA REQUIREMENTS.
2. ALL WIRING IN SPACE TO BE INSTALLED IN CONDUIT. CONDUIT AND DEVICES AT SCIF PERIMETER ALLS TO BE SURFACE MOUNTED.
3. ALL CONDUIT PENETRATIONS TO BE GROUNDED AT POINT OF PENETRATION OR DI-ELECTRIC COUPLINGS USED.
4. PROVIDE SCIF EMI POWER FILTER FOR CRAC UNIT FEEDERS AT SCIF INTERIOR WALL NEAR THE POINT OF PENETRATION.

MERIDIEN GROUP

MERIDIEN GROUP, LLC
208 SOUTH KING ST. SUITE 303
LEESBURG, VA 20175
(703) 777-8285
www.meridiengroupllc.com

DCA CITADEL
ARCHITECTURE | HISTORIC PRESERVATION | PLANNING | DESIGN

CERTIFICATIONS

KEY PLAN

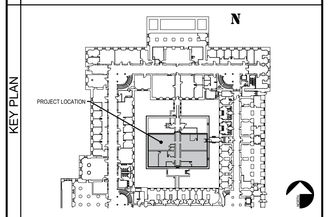

REVISION NOTES

MARK	DATE	DESCRIPTION

GRAPHIC SCALE

CAUTION: IF THIS DRAWING IS A REDUCTION THIS GRAPHIC SCALE MUST BE USED

CONTRACTORS	
A/E CON. NO.	
A/E TASK NO.	
CONS. CONTR	
CONS. WORK	
PRIME A/E	MERIDIEN GROUP / CITADEL DCA
SUB A/E	

BUILDING	
NAME	
STREET	
CITY/ST./ZIP	WASHINGTON, DC
BUILDING NO.	DC-
OTHER	
BUILDING NOs.	
FACILITY CODE	

PROJECT	
PROJECT TITLE	FEDERAL OFFICE BUILDING MT 1125 OFFICE RENOVATION
PROJECT DESCRIPTION	RENOVATION OF FIRST FLOOR SUITE AND UPGRADE SECURITY
PROJECT NO.	MT1125_26_005
GSA PM	BARBARA CHOATE
SUBMISSION	100% SUBMISSION FOR REVIEW REV-2
SUB. DATE	05 JUNE 2026

DRAWING	
DRAWING TITLE	
FILE NAME	
FLOOR NO.	1ST FLOOR
DRAWN BY	SRBR DATE DRAFTED: 06/16/2026
CHECKED BY	CWR/PTL SHEET SIZE: 24 x 36
DRAWING NO.	VAULT 1505 COVER SHEET ELECTRICAL
E-001	DISCIPLINE / SHEET TYPE / SEQUENCE: SHEET ?? OF 21

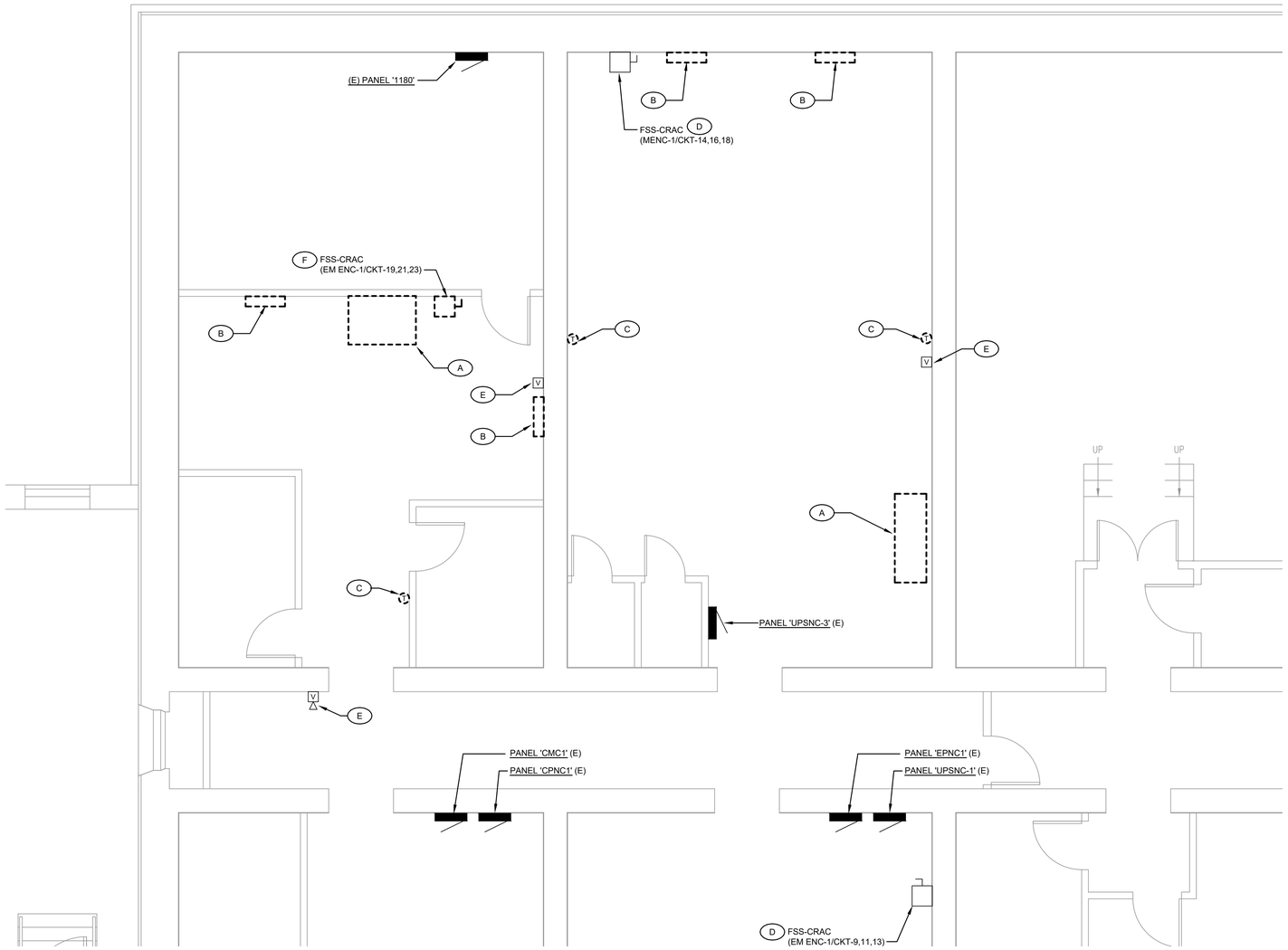

VAULT 1505 PLAN - ELECTRICAL DEMOLITION

SCALE: 1/4" = 1'-0"

0 1' 2' 4' 8'

DEMOLITION PLAN NOTES

- (A) REMOVE CRAC UNIT POWER & TERMINATE AT EXISTING LOCAL DISCONNECT FOR FUTURE USE.
- (B) EXISTING FLOOR MOUNTED FAN COIL UNITS TO BE REMOVED. DISCONNECT POWER & REMOVE WIRING BACK TO SOURCE PANEL.
- (C) EXISTING FLOOR MTD FCU'S TO BE REMOVED. COORDINATE WTIH MECHANICAL WORK.
- (D) ABANDONED CRAC UNIT DISCONNECT. MAINTAIN EXISTING IN OFF POSITION.
- (E) EXISTING FIRE ALARM SIGNAL DEVICE TO REMAIN.
- (F) RE-USE EXISTING EMERGENCY POWER & REPLACE 3 POLE BRANCH CIRCUIT FOR NEW FCU'S.

MERIDIEN GROUP

MERIDIEN GROUP, LLC
208 SOUTH KING ST. SUITE 303
LEESBURG, VA 20175
(703) 777-8285
www.meridiengroupllc.com

DCA CITADEL
ARCHITECTURE | HISTORIC PRESERVATION | PLANNING | DESIGN

CERTIFICATIONS

KEY PLAN

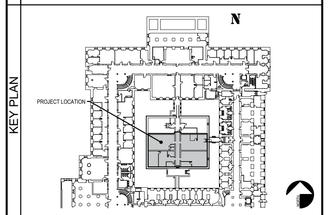

REVISION NOTES

MARK	DATE	DESCRIPTION

GRAPHIC SCALE

CAUTION: IF THIS DRAWING IS A REDUCTION THIS GRAPHIC SCALE MUST BE USED

CONTRACTORS	A/E CON. NO.	
	A/E TASK NO.	
	CONS. CONTR	
	CONS. WORK	
	PRIME A/E	MERIDIEN GROUP / CITADEL DCA
	SUB A/E	
BUILDING	NAME	
	STREET	
	CITY/ST./ZIP	WASHINGTON, DC
	BUILDING NO.	DC-
	OTHER BUILDING NOs.	
	FACILITY CODE	
PROJECT	PROJECT TITLE	FEDERAL OFFICE BUILDING MT 1125 OFFICE RENOVATION
	PROJECT DESCRIPTION	RENOVATION OF FIRST FLOOR SUITE AND UPGRADE SECURITY
	PROJECT NO.	MT1125_26_005
	GSA PM	BARBARA CHOATE
	SUBMISSION	100% SUBMISSION FOR REVIEW REV-2
	SUB. DATE	05 JUNE 2026
DRAWING	DRAWING TITLE	
	FILE NAME	
	FLOOR NO.	1ST FLOOR
	DRAWN BY	SRBR DATE DRAFTED: 06/16/2026
	CHECKED BY	CWR/PTL SHEET SIZE: 24 x 36
	DRAWING NO.	VAULT 1505 DEMOLITION ELECTRICAL
	E-101	DISCIPLINE SHEET TYPE SEQUENCE SHEET ?? OF 21

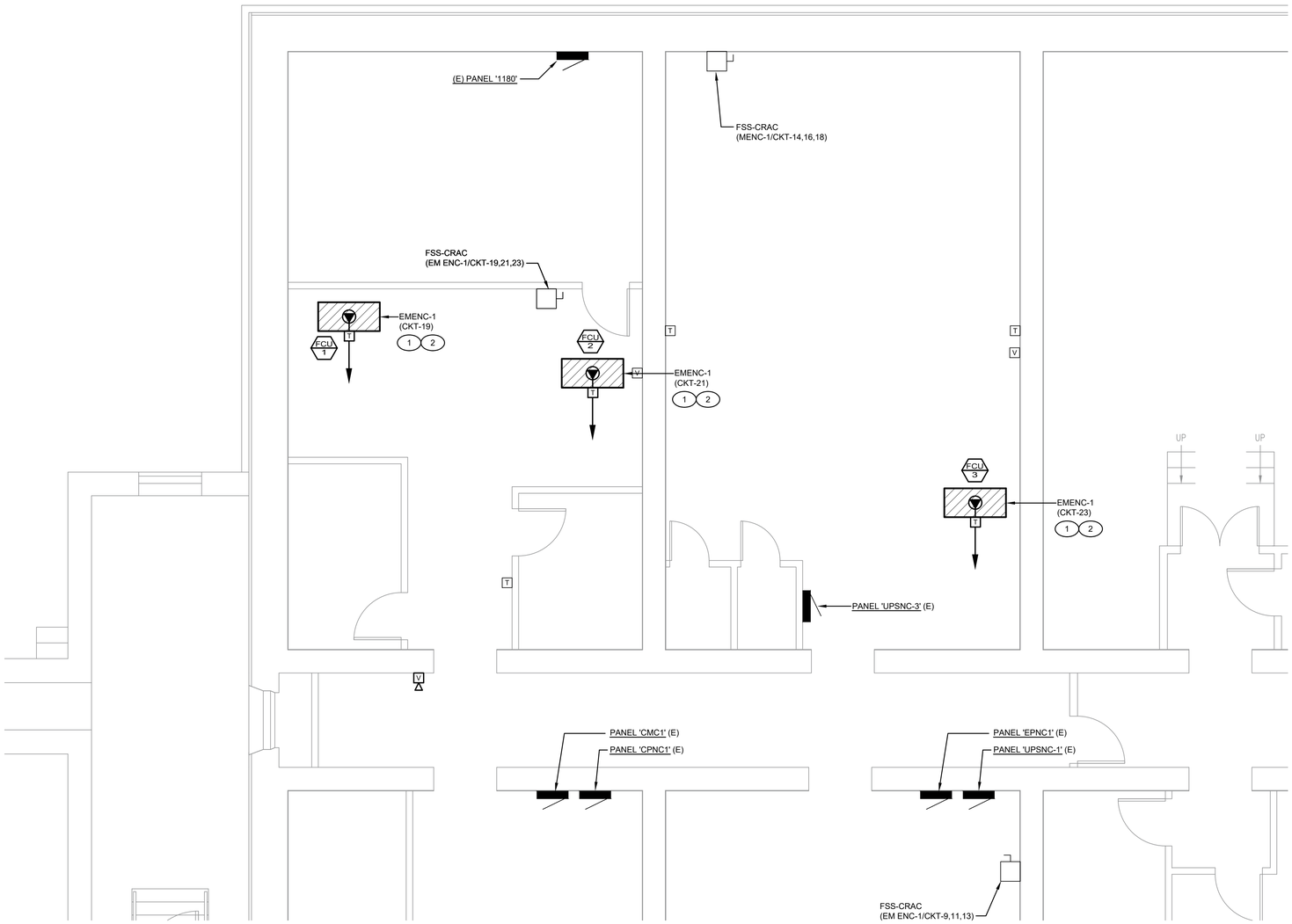

VAULT 1505 PLAN - ELECTRICAL NEW WORK

SCALE: 1/4" = 1'-0"

0 1' 2' 4' 8'

PLAN NOTES

1. REPLACE EXISTING 3 POLE BREAKER AT PANEL 'EMENC-1 & PROVIDE NEW 1/30 C/B FOR EACH FCU. CONNECT 2#10 + 1#10 GROUND IN ¾" CDT.
2. PROVIDE DIE-ELECTRIC BREAK AT SCIF WALL PENETRATIONS AND GROUNDING ON SECURE SIDE.

MERIDIEN GROUP

MERIDIEN GROUP, LLC
208 SOUTH KING ST. SUITE 303
LEESBURG, VA 20175
(703) 777-8285
www.meridiengroupllc.com

CITADEL DCA
ARCHITECTURE | HISTORIC PRESERVATION | PLANNING | DESIGN

CERTIFICATIONS

KEY PLAN

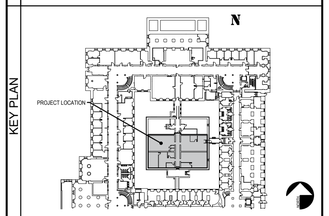

REVISION NOTES

MARK	DATE	DESCRIPTION

GRAPHIC SCALE

CAUTION: IF THIS DRAWING IS A REDUCTION THIS GRAPHIC SCALE MUST BE USED

CONTRACTORS	
A/E CON. NO.	
A/E TASK NO.	
CONS. CONTR	
CONS. WORK	
PRIME A/E	MERIDIEN GROUP / CITADEL DCA
SUB A/E	

BUILDING	
NAME	
STREET	
CITY/ST./ZIP	WASHINGTON, DC
BUILDING NO.	DC-
OTHER	
BUILDING NOs.	
FACILITY CODE	

PROJECT	
PROJECT TITLE	FEDERAL OFFICE BUILDING MT 1125 OFFICE RENOVATION
PROJECT DESCRIPTION	RENOVATION OF FIRST FLOOR SUITE AND UPGRADE SECURITY
PROJECT NO.	MT1125_26_005
GSA PM	BARBARA CHOATE
SUBMISSION	100% SUBMISSION FOR REVIEW REV-2
SUB. DATE	05 JUNE 2026

DRAWING	
DRAWING TITLE	
FILE NAME	
FLOOR NO.	1ST FLOOR
DRAWN BY	SRBR DATE DRAFTED: 06/16/2026
CHECKED BY	CWR/PTL SHEET SIZE: 24 x 36
DRAWING NO.	VAULT 1505 NEW WORK ELECTRICAL
E-102	DISCIPLINE / SHEET TYPE / SEQUENCE
	SHEET ?? OF 21