107050-100-1.dwg

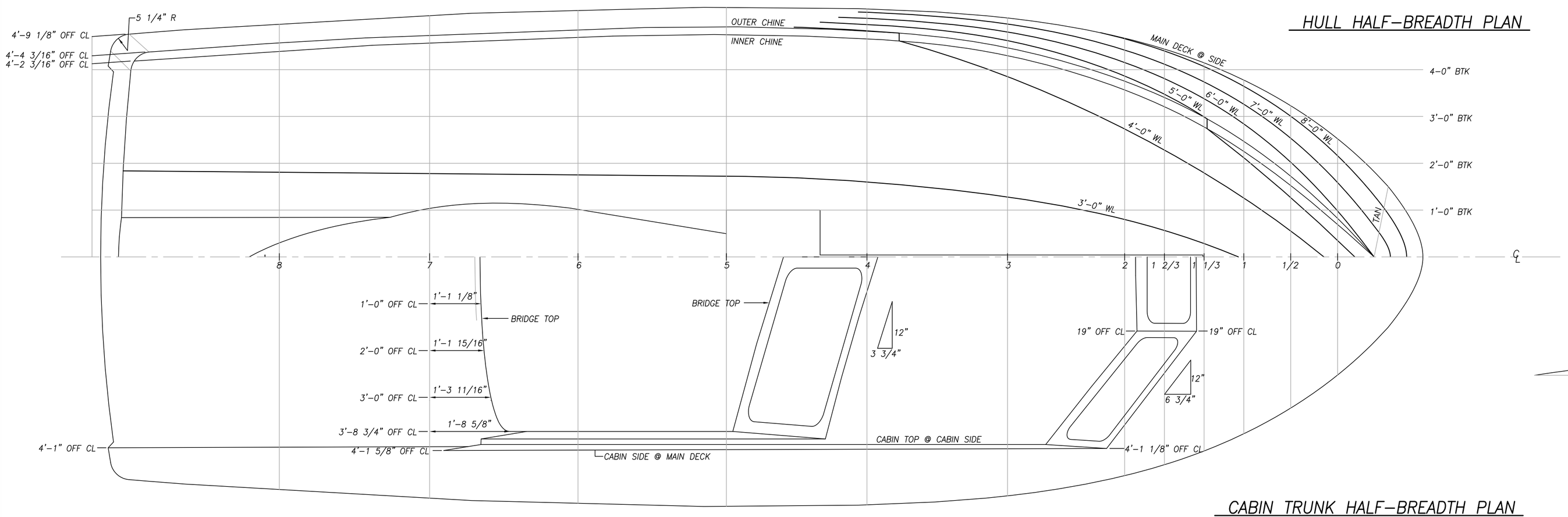

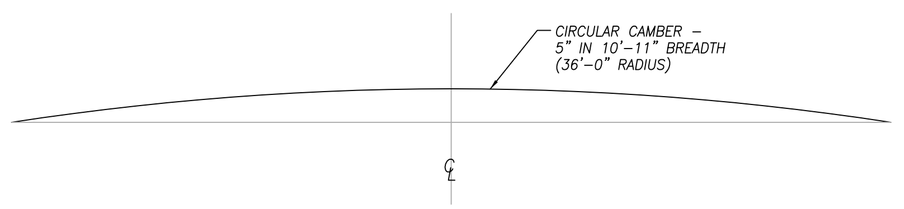

CAMBER CURVE

USE FOR MAIN DECK, CABIN TOP & BRIDGE TOP

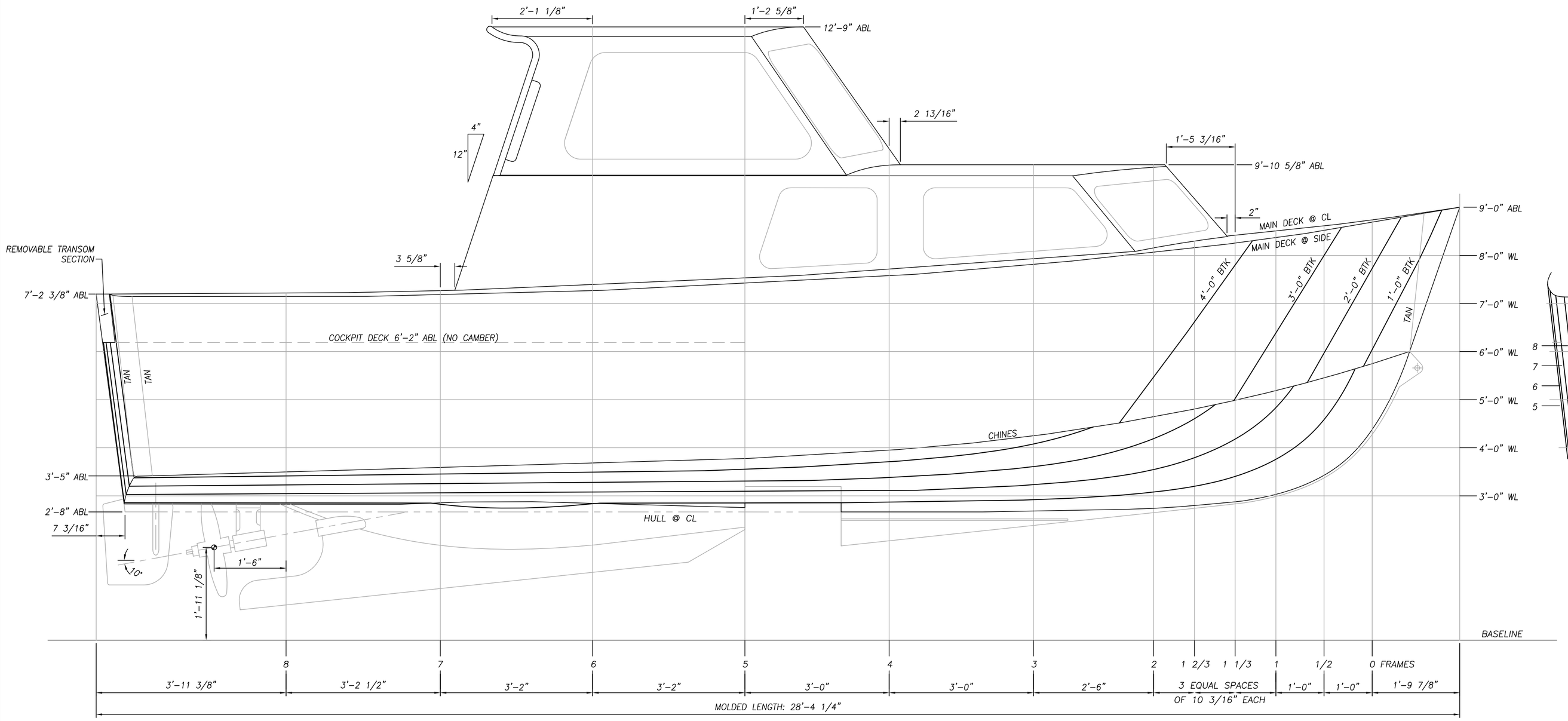

SHEER PLAN

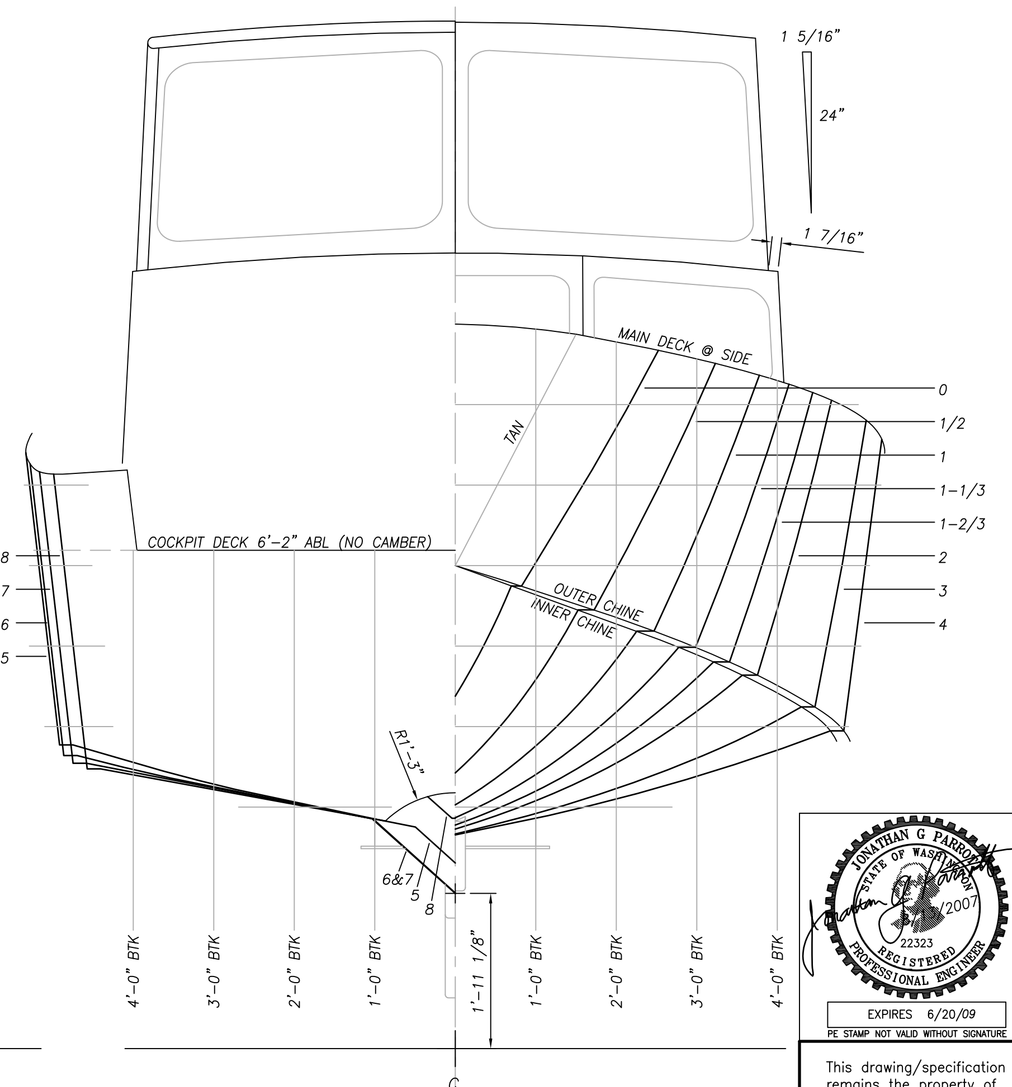

BODY PLAN

GENERAL NOTES

1. THESE LINES ARE NOT LOFT FAIRED.

REVISIONS

SYM	ZONE	DESCRIPTION	BY	DATE

JONATHAN G PARRISH
STATE OF WASHINGTON
22323
REGISTERED PROFESSIONAL ENGINEER
EXPIRES 6/20/09
PE STAMP NOT VALID WITHOUT SIGNATURE

This drawing/specification remains the property of NOAA Marine Operations Center, Pacific and should neither be copied nor used in manufacturing, nor shown or handed over to a third party or to competing firms without our written consent.

NO.	TITLE	DRAWING NO.
	REFERENCES	

PROJECT 28' HYDROGRAPHIC LAUNCH

CLIENT NOAA MARINE OPERATIONS CENTER, PACIFIC

TITLE LINES DRAWING

JMC
Jensen Maritime Consultants Inc.
NAVAL ARCHITECTS MARINE ENGINEERS
200 W Mercer Street, Suite 501
Seattle, Washington 98119
www.jensenmaritime.com
Ph 206 284 1274
Fax 206 284 2556

DWN	CES	DATE	7/10/07
CKD		DATE	
APP		DATE	
SCALE 3/4" = 1'-0"			
DWG NO. 107050-100-1		REV	–
SHEET 1 OF 1			

107050-110-M

REVISIONS				
SYM	ZONE	DESCRIPTION	BY	DATE

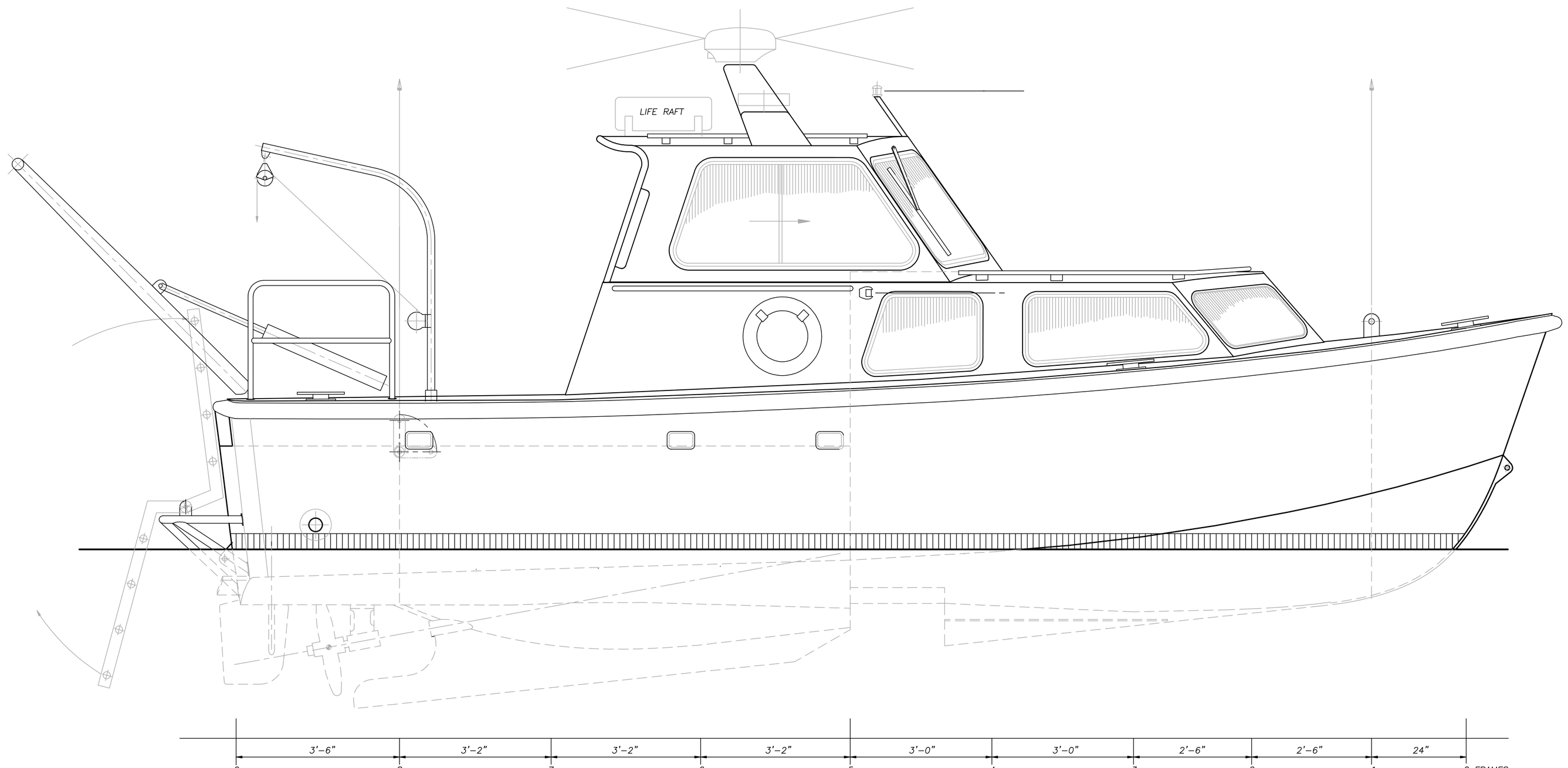

OUTBOARD PROFILE

GENERAL NOTES

1. ALL WORKMANSHIP AND WELDING SHALL BE IN ACCORDANCE WITH THE AMERICAN BUREAU OF SHIPPING'S "RULES FOR BUILDING AND CLASSING ALUMINUM VESSELS", LATEST EDITION. THIS VESSEL IS NOT CLASSED.

2. ALUMINUM PLATES SHALL BE 5086-H32 OR 5086-H34 FOR PLATES AND 6061-T6 FOR SHAPES. STAINLESS STEEL SHALL BE AISI 316 OR 316L.

3. ALIGNMENT OF STRUCTURAL MEMBERS SHALL BE WITHIN 1/2 THICKNESS OF THINNER MATERIAL JOINED.

4. RATHOLES AND LIMBERS SHALL BE 1 1/2" RADIUS FOR MEMBERS 3 1/2" DEPTH OR LARGER AND 1" RADIUS FOR MEMBERS LESS THAN 3 1/2" DEPTH, EXCEPT AS NOTED.

5. ALL TANKS AND VOIDS TO BE LIMBERED FOR DRAINAGE AND VENTILATION.

6. DIMENSIONS FOR DOORS, WINDOWS, AND HATCHES ARE TO CLEAR OPENINGS EXCEPT AS NOTED.

PRINCIPAL CHARACTERISTICS

LENGTH, OVERALL, MOLDED		28'-4"
BREADTH, MOLDED		10'-8"
BREADTH, OVER GUARDS		11'-5"
DEPTH, MOLDED AMIDSHIPS TO MAIN DECK		5'-8"
CAPACITIES:		
FUEL OIL (98%)	APPROX	137 GAL
SEWAGE HOLDING TANK		23 GAL

NO.	TITLE	DRAWING NO.
5	GENERAL ARRANGEMENTS	107050-101-3
4	INBOARD STRUCTURAL PROFILE	107050-116-1
3	DECK STRUCTURAL PLANS	107050-131-1
2	MIDSHIP & TYPICAL SECTIONS	107050-117-1
1	SHELL PLATING AND FRAMING	107050-111-1

REFERENCES

JONATHAN C. TARRANT — STATE OF WASHINGTON — 12321 — REGISTERED PROFESSIONAL ENGINEER — 2007

EXPIRES 6/20/09

PE STAMP NOT VALID WITHOUT SIGNATURE

PROJECT 28' HYDROGRAPHIC LAUNCH

CLIENT NOAA MARINE OPERATIONS CENTER, PACIFIC

TITLE OUTBOARD PROFILE

This drawing/specification remains the property of NOAA Marine Operations Center, Pacific and should neither be copied nor used in manufacturing, nor shown or handed over to a third party or to competing firms without our written consent.

JMC
Jensen MarYime Consultants Inc.
NAVAL ARCHITECTS MARINE ENGINEERS
200 W Mercer Street, Suite 501
Seattle, Washington 98119
www.jensenmaritime.com
Ph 206 284 1274
Fax 206 284 2556

DWN	CES	DATE	6/29/07
CKD		DATE	
APP		DATE	
SCALE	3/4" = 1'-0"		
DWG NO.	107050-101-1	REV	-
SHEET	1 OF 1		

DWG NO:

TITLE:

107050-110-M

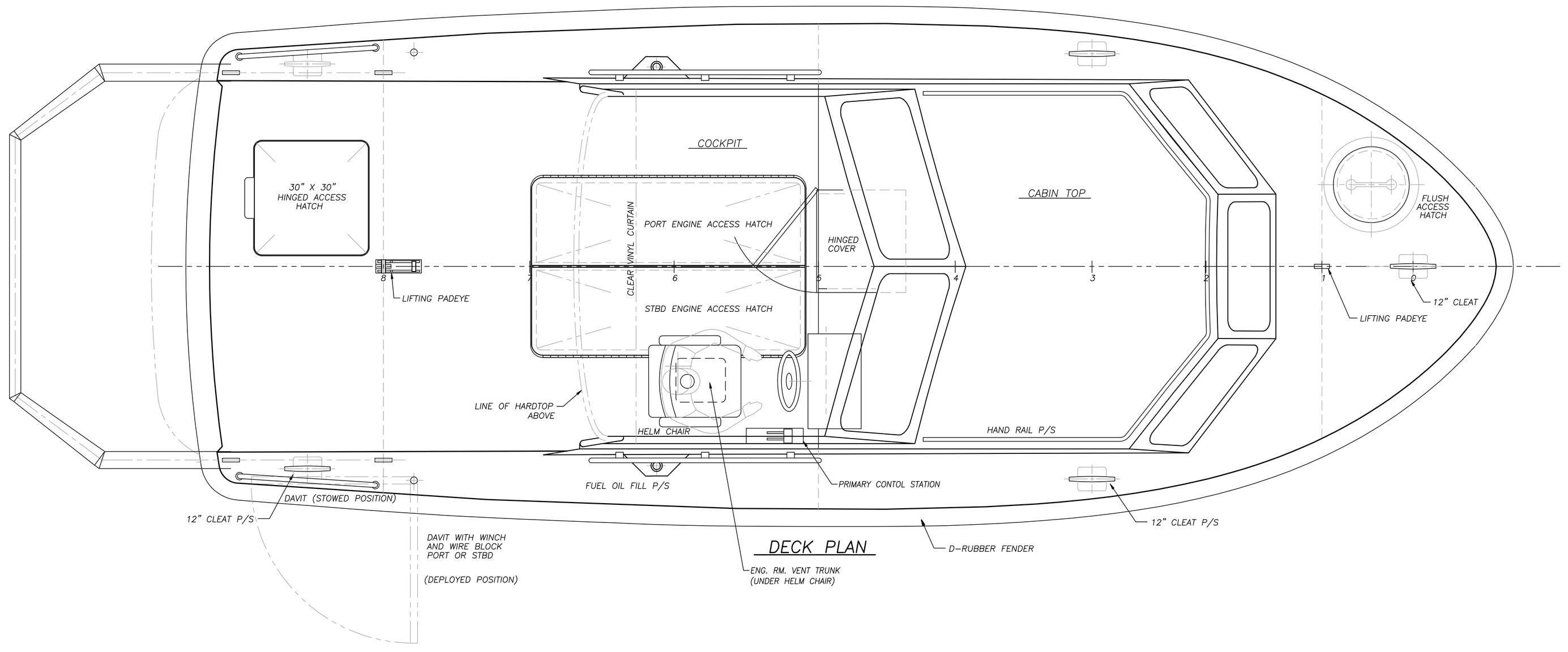

DECK PLAN

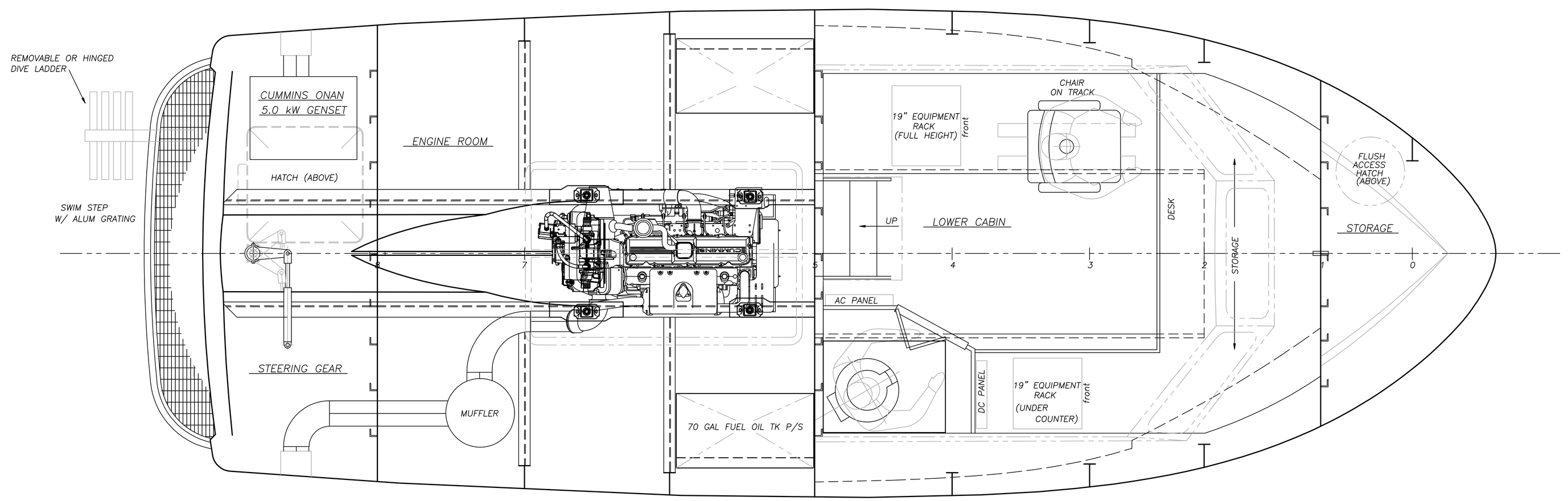

BELOW DECK PLAN

REVISIONS

SYM	ZONE	DESCRIPTION	BY	DATE

GENERAL NOTES

1. ALL WORKMANSHIP AND WELDING SHALL BE IN ACCORDANCE WITH THE AMERICAN BUREAU OF SHIPPING'S "RULES FOR BUILDING AND CLASSING ALUMINUM VESSELS", LATEST EDITION. THIS VESSEL IS NOT CLASSED.
2. ALUMINUM PLATES SHALL BE 5086-H32 OR 5086-H34 FOR PLATES AND 6061-T6 FOR SHAPES. STAINLESS STEEL SHALL BE AISI 316 OR 316L.
3. ALIGNMENT OF STRUCTURAL MEMBERS SHALL BE WITHIN 1/2 THICKNESS OF THINNER MATERIAL JOINED.
4. RATHOLES AND LIMBERS SHALL BE 1 1/2" RADIUS FOR MEMBERS 3 1/2" DEPTH OR LARGER AND 1" RADIUS FOR MEMBERS LESS THAN 3 1/2" DEPTH, EXCEPT AS NOTED.
5. ALL TANKS AND VOIDS TO BE LIMBERED FOR DRAINAGE AND VENTILATION.
6. DIMENSIONS FOR DOORS, WINDOWS, AND HATCHES ARE TO CLEAR OPENINGS EXCEPT AS NOTED.

NO.	TITLE	DRAWING NO.
5	OUTBOARD PROFILE	107050-101-1
4	INBOARD STRUCTURAL PROFILE	107050-116-1
3	DECK STRUCTURAL PLANS	107050-131-1
2	MIDSHIP & TYPICAL SECTIONS	107050-117-1
1	SHELL PLATING AND FRAMING	107050-111-1

REFERENCES

JONATHAN G. PARRIOTT
STATE OF WASHINGTON
22323
REGISTERED PROFESSIONAL ENGINEER
EXPIRES 6/20/09
PE STAMP NOT VALID WITHOUT SIGNATURE

PROJECT 28' HYDROGRAPHIC LAUNCH

CLIENT NOAA MARINE OPERATIONS CENTER, PACIFIC

TITLE GENERAL ARRANGEMENT

This drawing/specification remains the property of NOAA Marine Operations Center, Pacific and should neither be copied nor used in manufacturing, nor shown or handed over to a third party or to competing firms without our written consent.

JMC
Jensen MarKime Consultants Inc.
NAVAL ARCHITECTS MARINE ENGINEERS
200 W Mercer Street, Suite 501
Seattle, Washington 98119
www.jensenmaritime.com
Ph 206 284 1274
Fax 206 284 2556

DWN	CES	DATE	6/29/07
CKD		DATE	
APP		DATE	
SCALE	3/4" = 1'-0"		
DWG NO.	107050-101-3-1	REV	–
SHEET	1 OF 2		

DWG NO:

TITLE:

107050-110-M

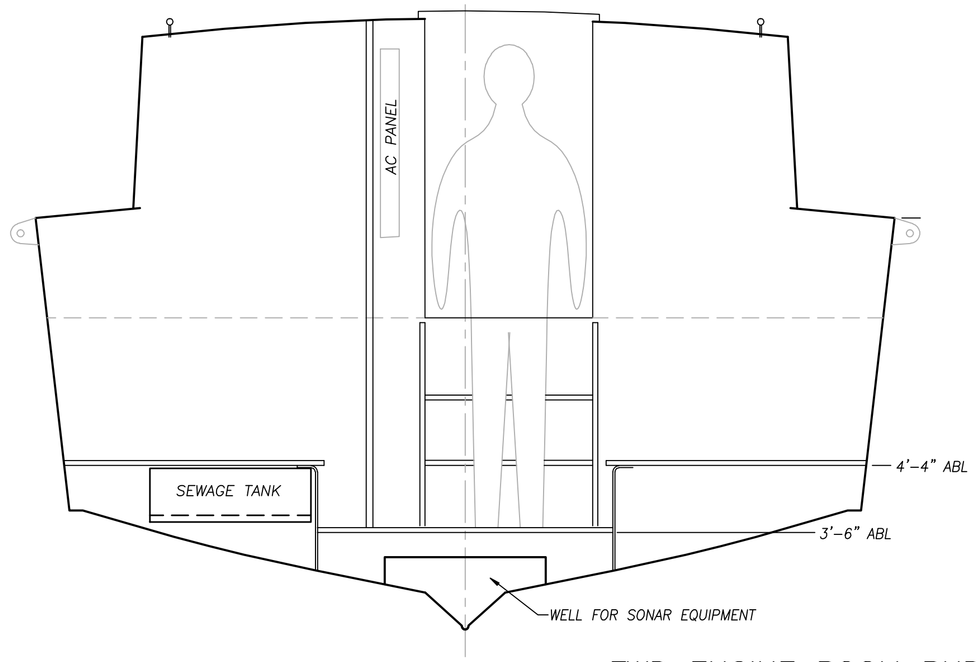

FWD ENGINE ROOM BHD

LKG AFT

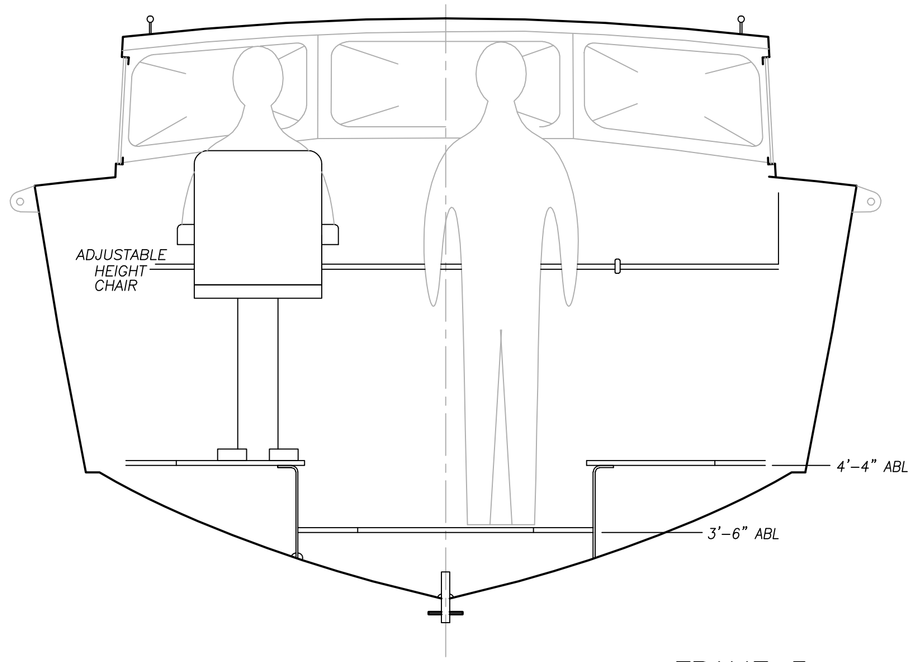

FRAME 3

LKG FWD

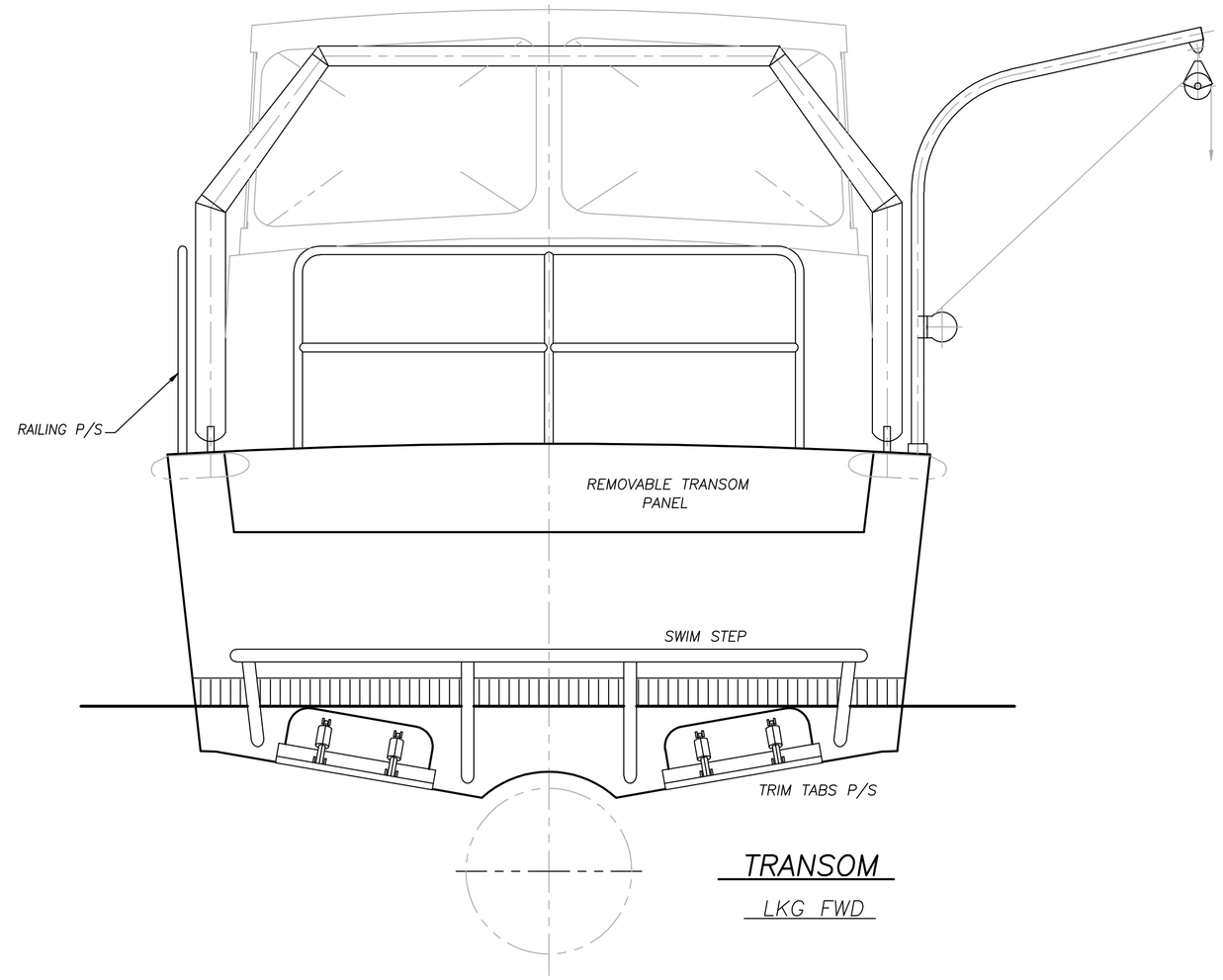

TRANSOM

LKG FWD

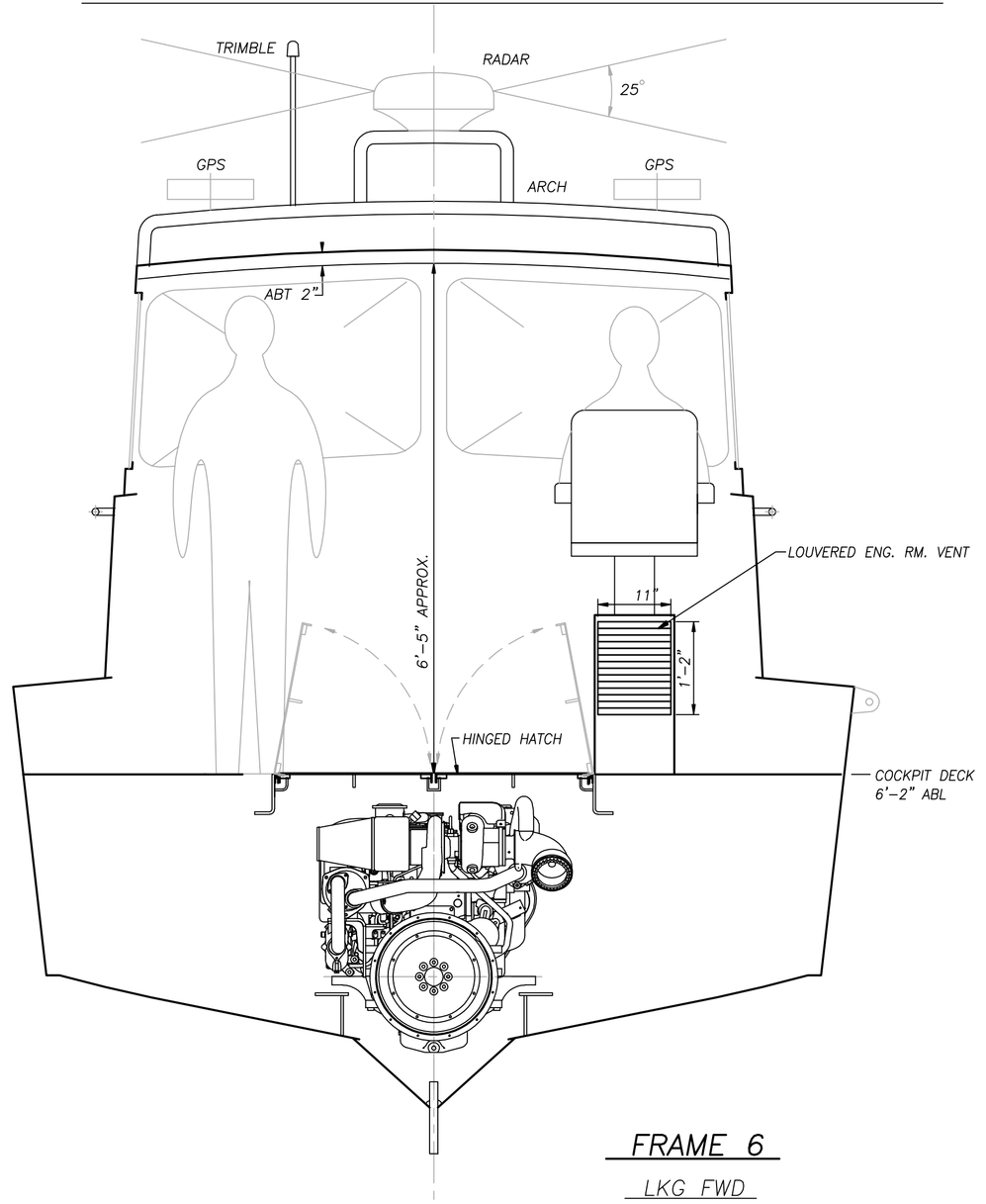

FRAME 6

LKG FWD

GENERAL NOTES

1. ALL WORKMANSHIP AND WELDING SHALL BE IN ACCORDANCE WITH THE AMERICAN BUREAU OF SHIPPING'S "RULES FOR BUILDING AND CLASSING ALUMINUM VESSELS", LATEST EDITION. THIS VESSEL IS NOT CLASSED.

2. ALUMINUM PLATES SHALL BE 5086-H32 OR 5086-H34 FOR PLATES AND 6061-T6 FOR SHAPES. STAINLESS STEEL SHALL BE AISI 316 OR 316L.

3. ALIGNMENT OF STRUCTURAL MEMBERS SHALL BE WITHIN 1/2 THICKNESS OF THINNER MATERIAL JOINED.

4. RATHOLES AND LIMBERS SHALL BE 1 1/2" RADIUS FOR MEMBERS 3 1/2" DEPTH OR LARGER AND 1" RADIUS FOR MEMBERS LESS THAN 3 1/2" DEPTH, EXCEPT AS NOTED.

5. ALL TANKS AND VOIDS TO BE LIMBERED FOR DRAINAGE AND VENTILATION.

6. DIMENSIONS FOR DOORS, WINDOWS, AND HATCHES ARE TO CLEAR OPENINGS EXCEPT AS NOTED.

REVISIONS

SYM	ZONE	DESCRIPTION	BY	DATE

NO.	TITLE	DRAWING NO.
5	OUTBOARD PROFILE	107050-101-1
4	INBOARD STRUCTURAL PROFILE	107050-116-1
3	DECK STRUCTURAL PLANS	107050-131-1
2	MIDSHIP & TYPICAL SECTIONS	107050-117-1
1	SHELL PLATING AND FRAMING	107050-111-1

REFERENCES

JONATHAN C. FARRINGTON — STATE OF WASHINGTON — 12321 — REGISTERED PROFESSIONAL ENGINEER — 2007

EXPIRES 6/20/09

PE STAMP NOT VALID WITHOUT SIGNATURE

PROJECT 28' HYDROGRAPHIC LAUNCH

CLIENT NOAA MARINE OPERATIONS CENTER, PACIFIC

TITLE GENERAL ARRANGEMENT

This drawing/specification remains the property of NOAA Marine Operations Center, Pacific and should neither be copied nor used in manufacturing, nor shown or handed over to a third party or to competing firms without our written consent.

JMC
Jensen MarItime Consultants Inc.
NAVAL ARCHITECTS MARINE ENGINEERS
200 W Mercer Street, Suite 501
Seattle, Washington 98119
www.jensenmaritime.com
Ph 206 284 1274
Fax 206 284 2556

DWN	CES	DATE	6/29/07
CKD		DATE	
APP		DATE	
SCALE	3/4" = 1'-0"		
DWG NO.	107050-101-3-2	REV	-
SHEET	2 OF 2		

DWG NO:

TITLE:

GENERAL NOTES

1. ALL WORKMANSHIP AND WELDING SHALL BE IN ACCORDANCE WITH THE AMERICAN BUREAU OF SHIPPING'S "RULES FOR BUILDING AND CLASSING ALUMINUM VESSELS", LATEST EDITION. THIS VESSEL IS NOT CLASSED.
2. ALUMINUM PLATES SHALL BE 5086-H32 OR 5086-H34 FOR PLATES AND 6061-T6 FOR SHAPES. STAINLESS STEEL SHALL BE AISI 316 OR 316L.
3. ALIGNMENT OF STRUCTURAL MEMBERS SHALL BE WITHIN 1/2 THICKNESS OF THINNER MATERIAL JOINED.
4. BRACKETS AND LUMBERS SHALL BE 1 1/2" RADIUS FOR MEMBERS 3 1/2" DEPTH OR LARGER AND 1" RADIUS FOR MEMBERS LESS THAN 3 1/2" DEPTH, EXCEPT AS NOTED.
5. ALL TANKS AND VOIDS TO BE LUMBERED FOR DRAINAGE AND VENTILATION.
6. DIMENSIONS FOR DOORS, WINDOWS, AND HATCHES ARE TO CLEAR OPENINGS EXCEPT AS NOTED.

REVISIONS				
SYM	ZONE	DESCRIPTION	BY	DATE

This drawing/specification remains the property of Jensen Maritime Consultants, Inc. and should neither be copied nor used in connection with any work shown or hinted over to a third party or to others without our written consent.

REGISTERED PROFESSIONAL ENGINEER — STATE OF WASHINGTON — CHRISTOPHER E. SCHUBACK — 22700 — EXPIRES: 6/29/09 — AT SEAL OR DATE WHICH APPEARS

NO.	REFERENCES	TITLE	DRAWING NO.
5	OUTBOARD PROFILE		107050-101-1
4	GENERAL ARRANGEMENTS		107050-101-3
3	INBOARD STRUCTURAL PROFILE		107050-116-1
2	DECK STRUCTURAL PLANS		107050-131-1
1	MIDSHIP & TYPICAL SECTIONS		107050-117-1

PROJECT: 28' HYDROGRAPHIC LAUNCH
CLIENT: NOAA MARINE OPERATIONS CENTER, PACIFIC
TITLE: SHELL FRAMING AND PLATING

Jensen Maritime Consultants Inc.
NAVAL ARCHITECTS MARINE ENGINEERS
2601 W. Marina Place, Suite 310
Seattle, WA 98199
501 Ph 206 284 1274
Fax 206 284 2256
www.jensenmaritime.com

DWN	CES	DATE	6/29/07
CHD		DATE	
APP		DATE	

SCALE 3/4" = 1'-0"
DWG NO. 107050-111-1
SHEET 1 OF 1
REV —

DMG NO: TITLE:

107050-110-M

(*)NOTE:
DIMENSIONS ARE SHOWN FOR GUIDANCE ONLY. BUILDER TO VERIFY FROM EQUIPMENT PRIOR TO FABRICATION OF MOUNTING BRACKETS & PROPULSION FOUNDATIONS.

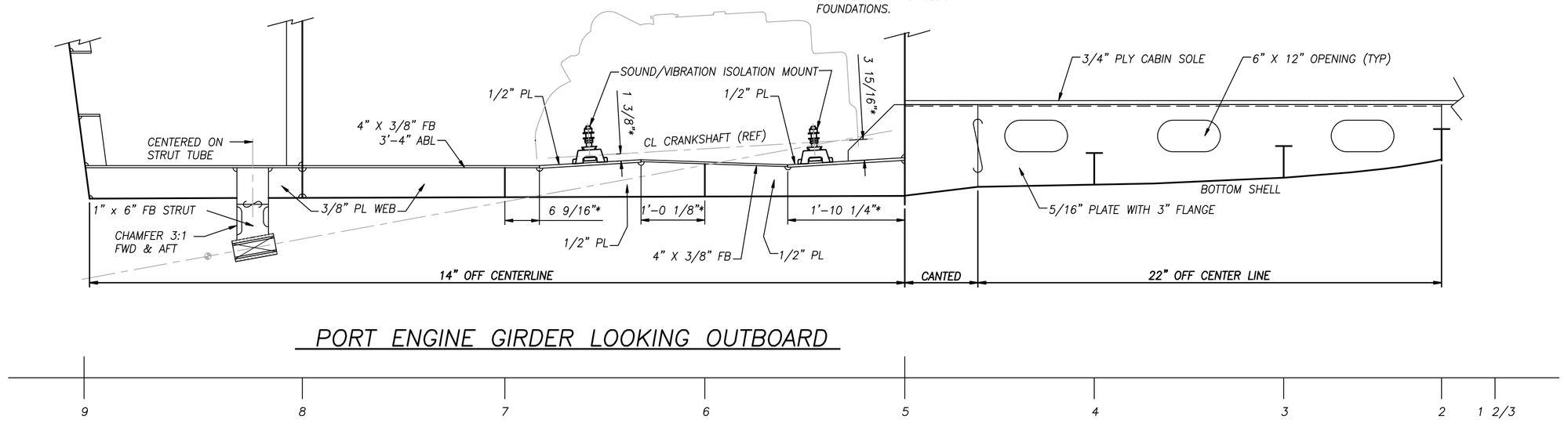

PORT ENGINE GIRDER LOOKING OUTBOARD

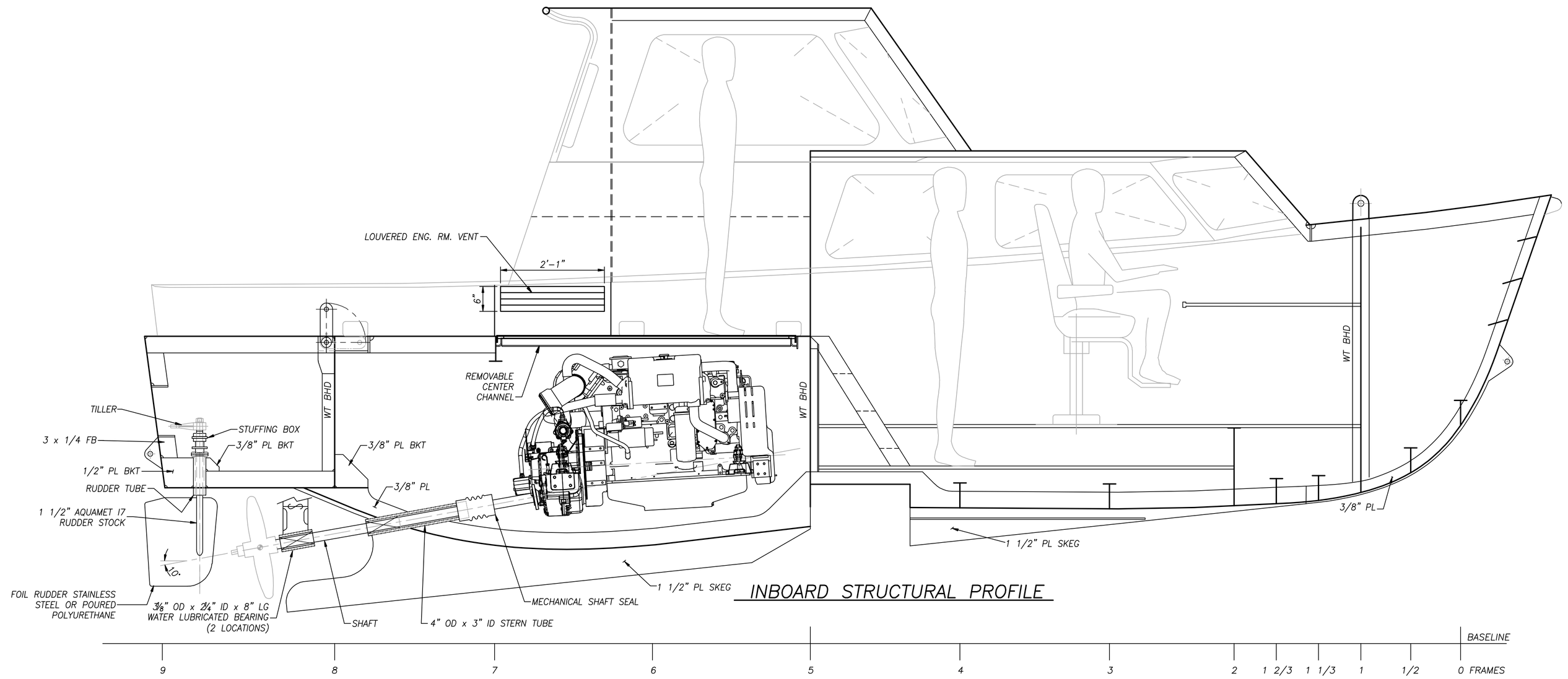

INBOARD STRUCTURAL PROFILE

REVISIONS

SYM	ZONE	DESCRIPTION	BY	DATE

GENERAL NOTES

1. ALL WORKMANSHIP AND WELDING SHALL BE IN ACCORDANCE WITH THE AMERICAN BUREAU OF SHIPPING'S "RULES FOR BUILDING AND CLASSING ALUMINUM VESSELS", LATEST EDITION. THIS VESSEL IS NOT CLASSED.
2. ALUMINUM PLATES SHALL BE 5086-H32 OR 5086-H34 FOR PLATES AND 6061-T6 FOR SHAPES. STAINLESS STEEL SHALL BE AISI 316 OR 316L.
3. ALIGNMENT OF STRUCTURAL MEMBERS SHALL BE WITHIN 1/2 THICKNESS OF THINNER MATERIAL JOINED.
4. RATHOLES AND LIMBERS SHALL BE 1 1/2" RADIUS FOR MEMBERS 3 1/2" DEPTH OR LARGER AND 1" RADIUS FOR MEMBERS LESS THAN 3 1/2" DEPTH, EXCEPT AS NOTED.
5. ALL TANKS AND VOIDS TO BE LIMBERED FOR DRAINAGE AND VENTILATION.
6. DIMENSIONS FOR DOORS, WINDOWS, AND HATCHES ARE TO CLEAR OPENINGS EXCEPT AS NOTED.

NO.	TITLE	DRAWING NO.
5	OUTBOARD PROFILE	107050-101-1
4	GENERAL ARRANGEMENTS	107050-101-3
3	DECK STRUCTURAL PLANS	107050-131-1
2	MIDSHIP & TYPICAL SECTIONS	107050-117-1
1	SHELL PLATING AND FRAMING	107050-111-1

REFERENCES

JONATHAN G PARROTT
STATE OF WASHINGTON
22323
REGISTERED PROFESSIONAL ENGINEER
EXPIRES 6/20/09
PE STAMP NOT VALID WITHOUT SIGNATURE

PROJECT 28' HYDROGRAPHIC LAUNCH

CLIENT NOAA MARINE OPERATIONS CENTER, PACIFIC

TITLE INBOARD STRUCTURAL PROFILE

This drawing/specification remains the property of NOAA Marine Operations Center, Pacific and should neither be copied nor used in manufacturing, nor shown or handed over to a third party or to competing firms without our written consent.

JMC
Jensen MarXime Consultants Inc.
NAVAL ARCHITECTS MARINE ENGINEERS
200 W Mercer Street, Suite 501
Seattle, Washington 98119
www.jensenmaritime.com
Ph 206 284 1274
Fax 206 284 2556

DWN	CES	DATE	6/29/07
CKD		DATE	
APP		DATE	
SCALE	3/4" = 1'-0"		
DWG NO.	107050-116-1	REV	–
SHEET	1 OF 1		

DWG NO:

TITLE:

107050-110-M

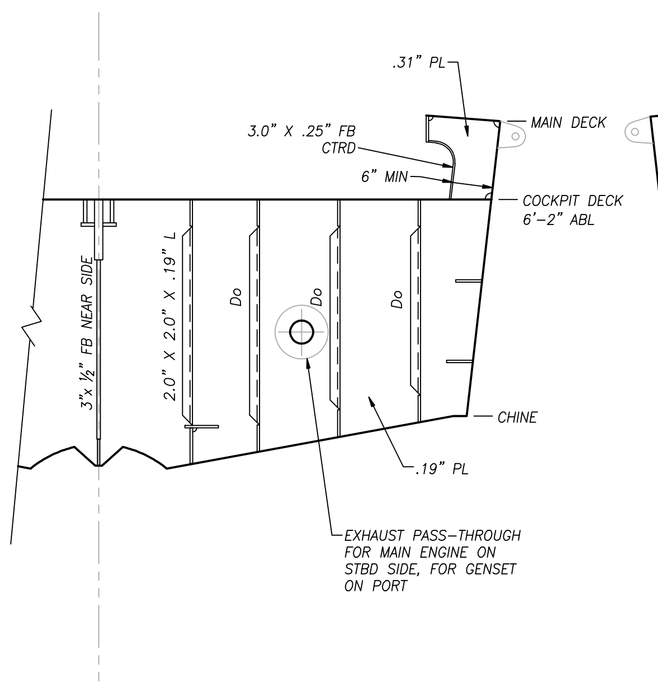

FRAME 8

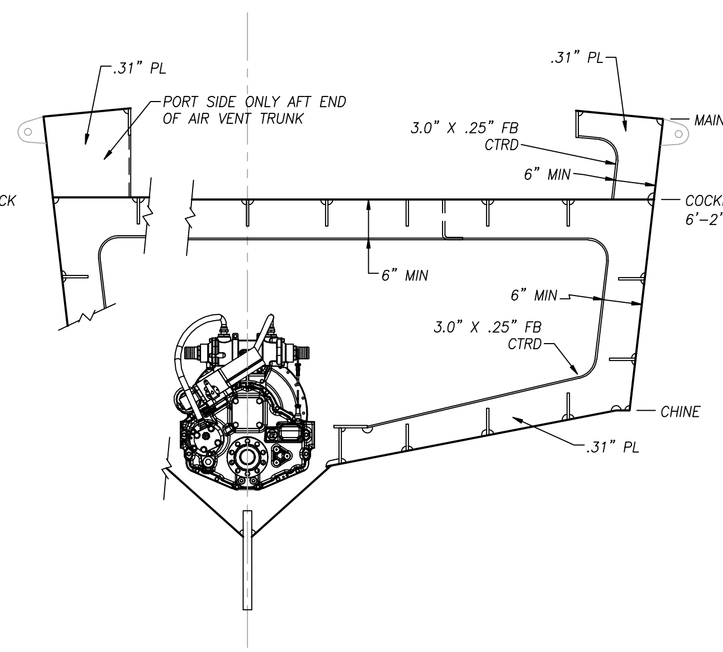

FRAME 7

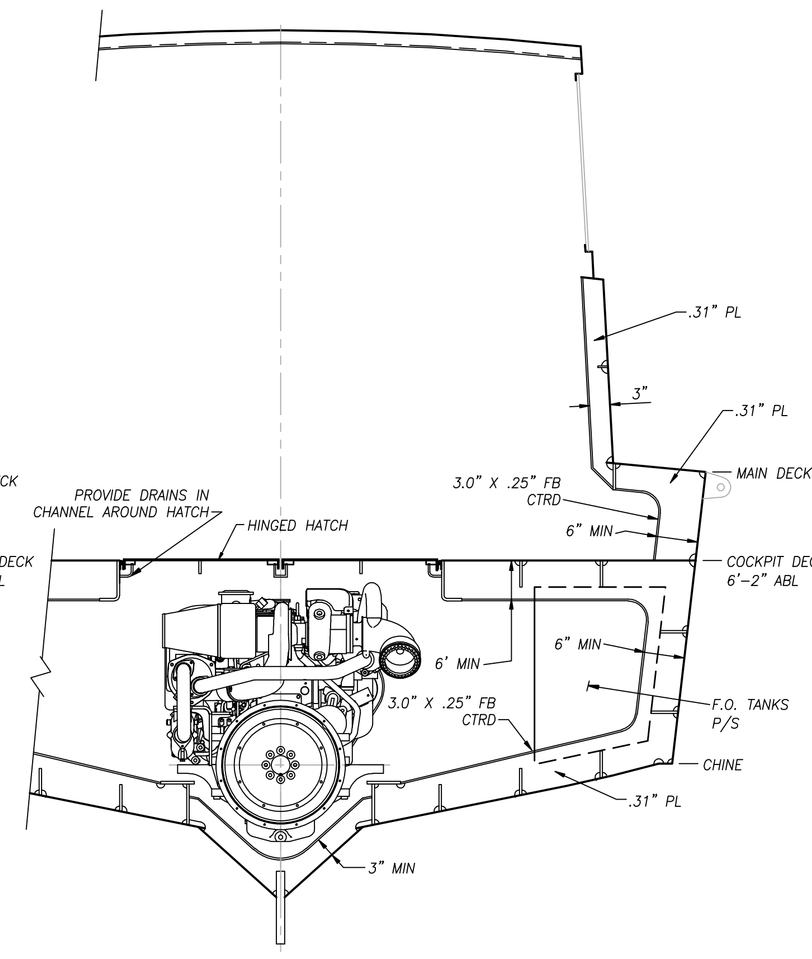

FRAME 6

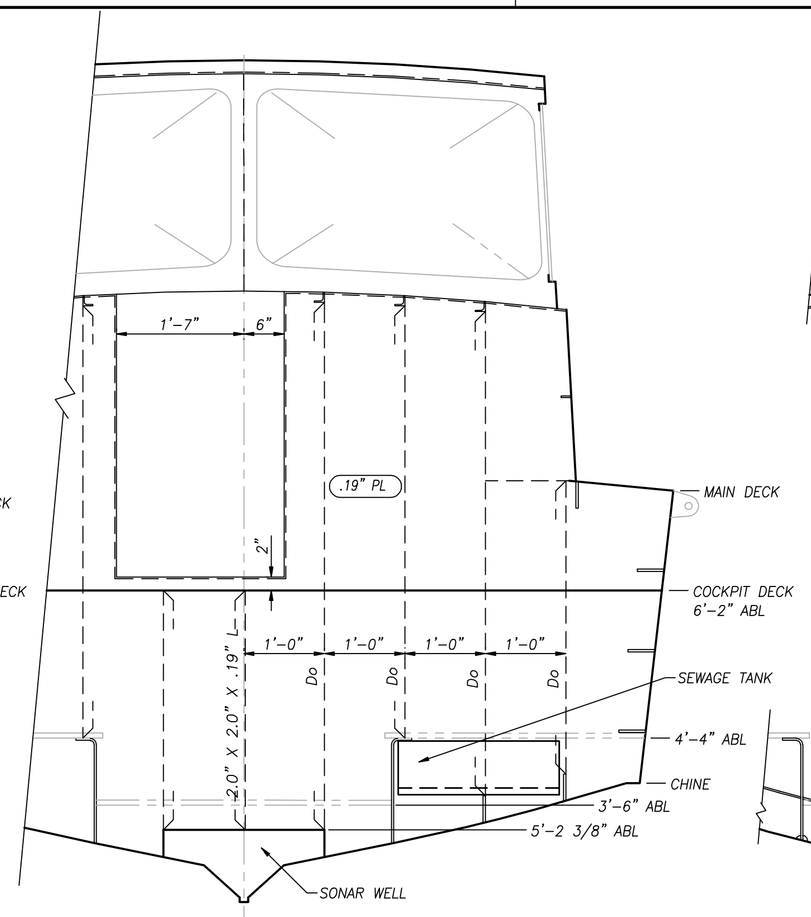

FRAME 5

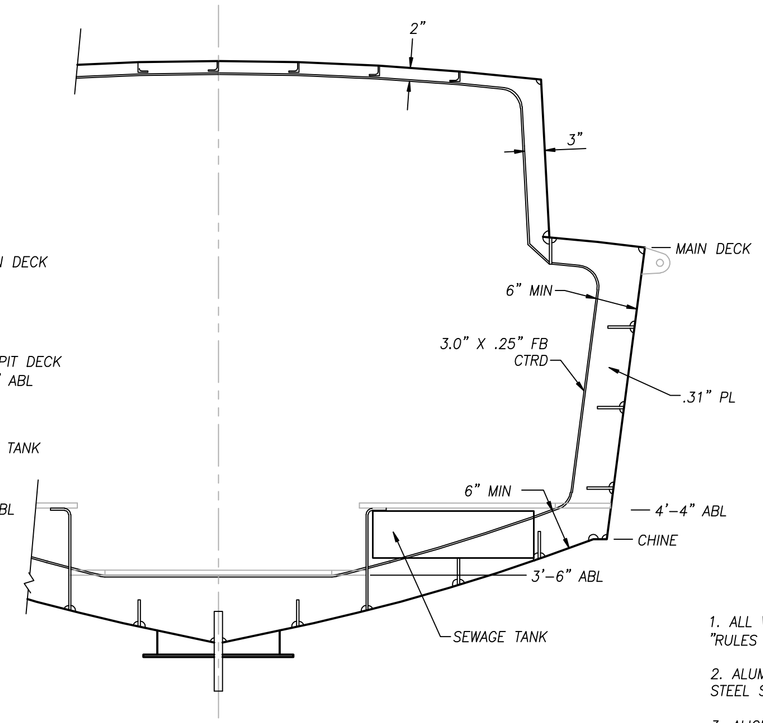

FRAME 4

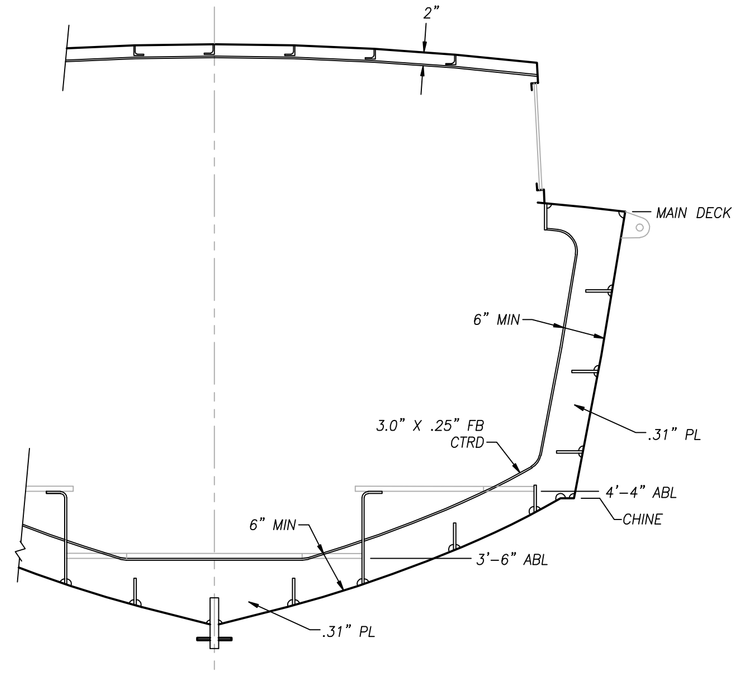

FRAME 3

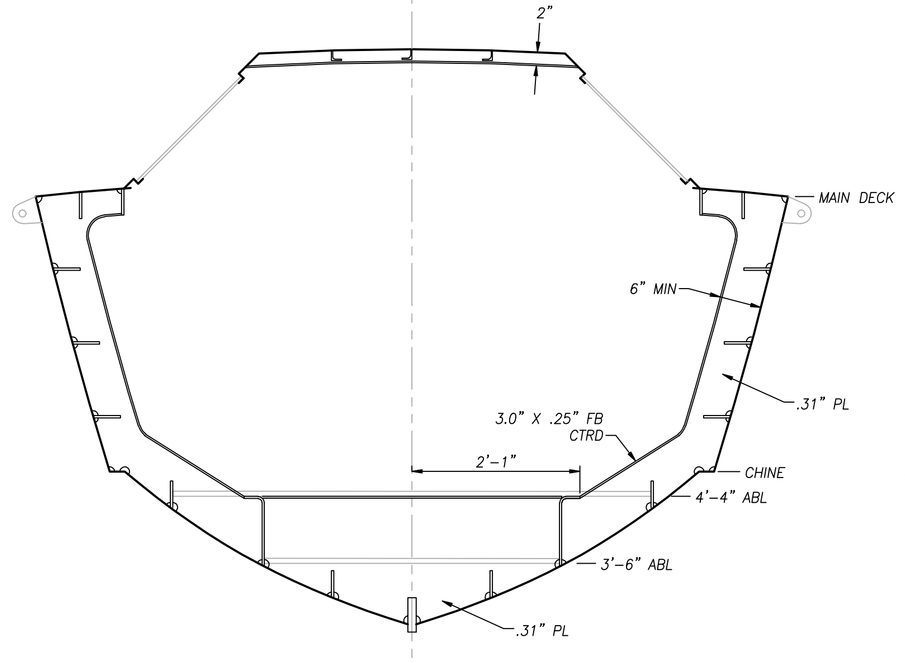

FRAME 2

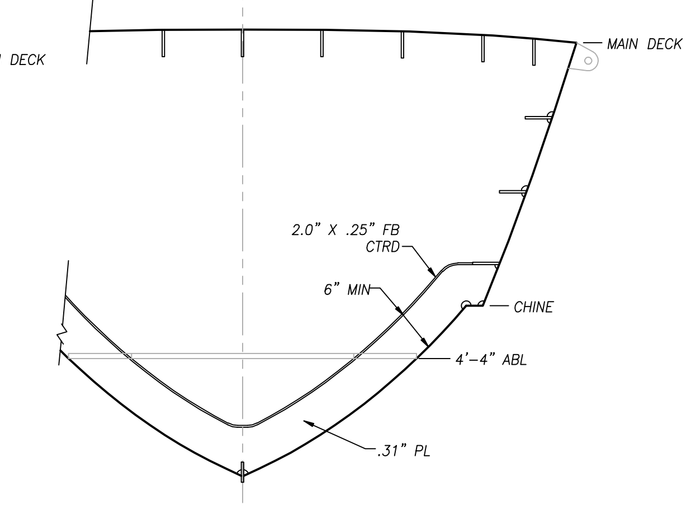

FRAME 1 1/3

FRAMES 1/2 & 1 2/3 SIMILAR

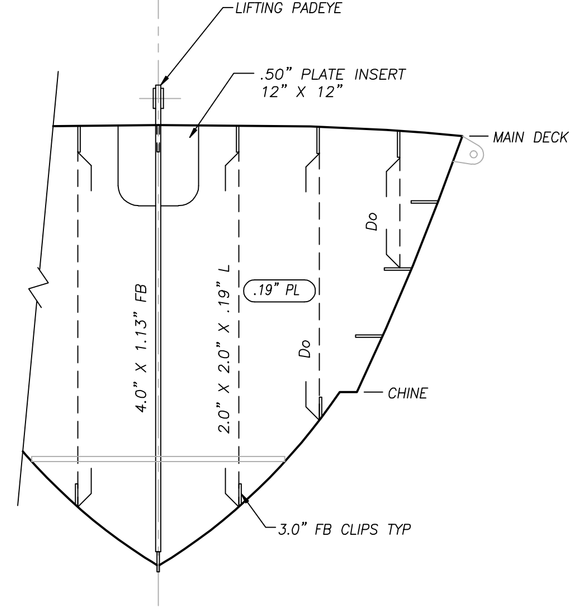

FRAME 1

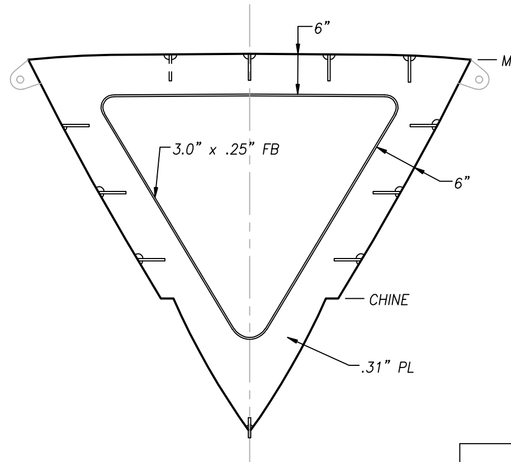

FRAME 0

GENERAL NOTES

1. ALL WORKMANSHIP AND WELDING SHALL BE IN ACCORDANCE WITH THE AMERICAN BUREAU OF SHIPPING'S "RULES FOR BUILDING AND CLASSING ALUMINUM VESSELS", LATEST EDITION. THIS VESSEL IS NOT CLASSED.
2. ALUMINUM PLATES SHALL BE 5086-H32 OR 5086-H34 FOR PLATES AND 6061-T6 FOR SHAPES. STAINLESS STEEL SHALL BE AISI 316 OR 316L.
3. ALIGNMENT OF STRUCTURAL MEMBERS SHALL BE WITHIN 1/2 THICKNESS OF THINNER MATERIAL JOINED.
4. RATHOLES AND LIMBERS SHALL BE 1 1/2" RADIUS FOR MEMBERS 3 1/2" DEPTH OR LARGER AND 1" RADIUS FOR MEMBERS LESS THAN 3 1/2" DEPTH, EXCEPT AS NOTED.
5. ALL TANKS AND VOIDS TO BE LIMBERED FOR DRAINAGE AND VENTILATION.
6. DIMENSIONS FOR DOORS, WINDOWS, AND HATCHES ARE TO CLEAR OPENINGS EXCEPT AS NOTED.
7. ALL SECTION VIEWS ARE LOOKING FORWARD.

REVISIONS

SYM	ZONE	DESCRIPTION	BY	DATE

REFERENCES

NO.	TITLE	DRAWING NO.
5	OUTBOARD PROFILE	107050-101-1
4	GENERAL ARRANGEMENTS	107050-101-3
3	INBOARD STRUCTURAL PROFILE	107050-116-1
2	DECK STRUCTURAL PLANS	107050-131-1
1	SHELL PLATING AND FRAMING	107050-111-1

JONATHAN C. PARSONS — STATE OF WASHINGTON — 12321 — REGISTERED PROFESSIONAL ENGINEER — 2007

EXPIRES 6/20/09

PE STAMP NOT VALID WITHOUT SIGNATURE

PROJECT 28' HYDROGRAPHIC LAUNCH

CLIENT NOAA MARINE OPERATIONS CENTER, PACIFIC

TITLE MIDSHIP AND TYPICAL SECTIONS

This drawing/specification remains the property of NOAA Marine Operations Center, Pacific and should neither be copied nor used in manufacturing, nor shown or handed over to a third party or to competing firms without our written consent.

JMC
Jensen MarItime Consultants Inc.
NAVAL ARCHITECTS MARINE ENGINEERS
200 W Mercer Street, Suite 501
Seattle, Washington 98119
www.jensenmaritime.com
Ph 206 284 1274
Fax 206 284 2556

DWN	CES	DATE 6/29/07
CKD		DATE
APP		DATE
SCALE	3/4" = 1'-0"	
DWG NO.	107050-117-1	REV –
SHEET	1 OF 1	

DWG NO:

TITLE:

107050-110-M

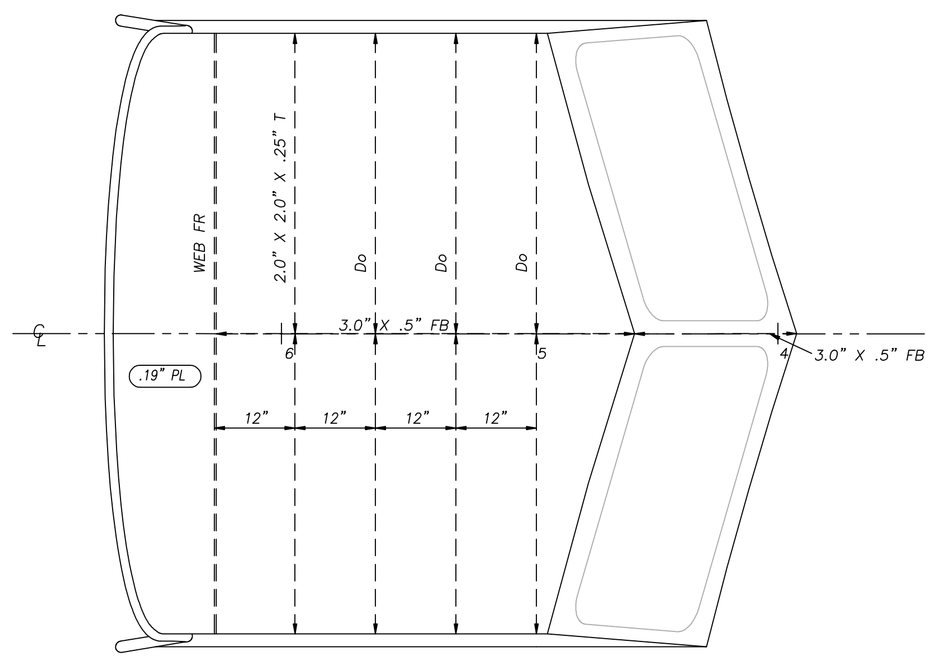

BRIDGE TOP PLAN

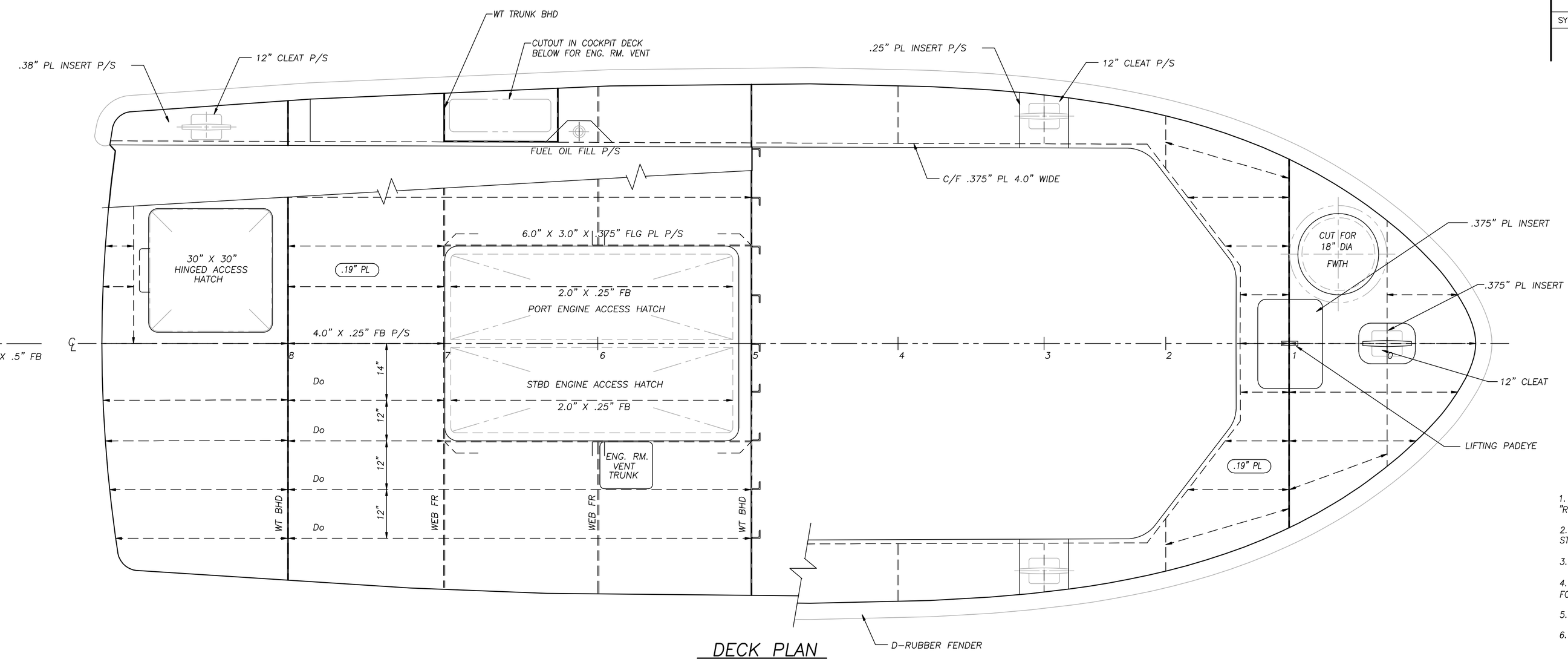

DECK PLAN

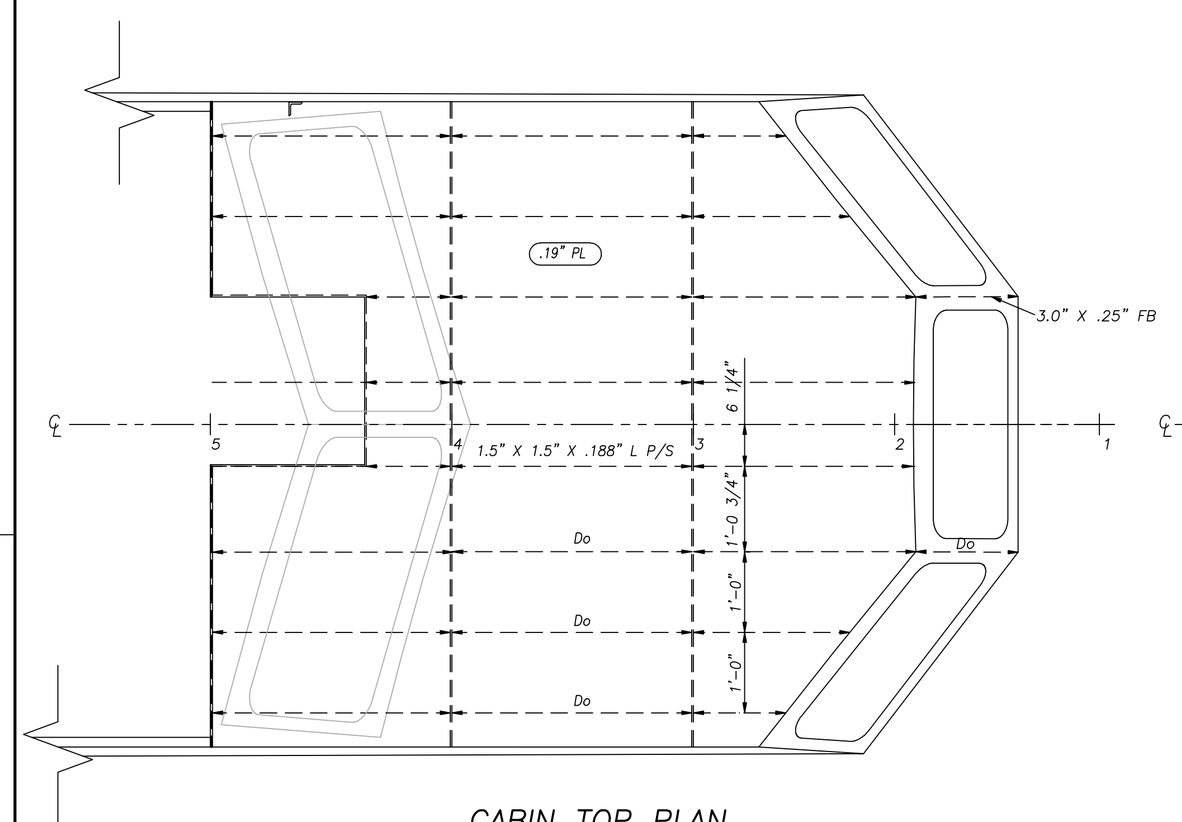

CABIN TOP PLAN

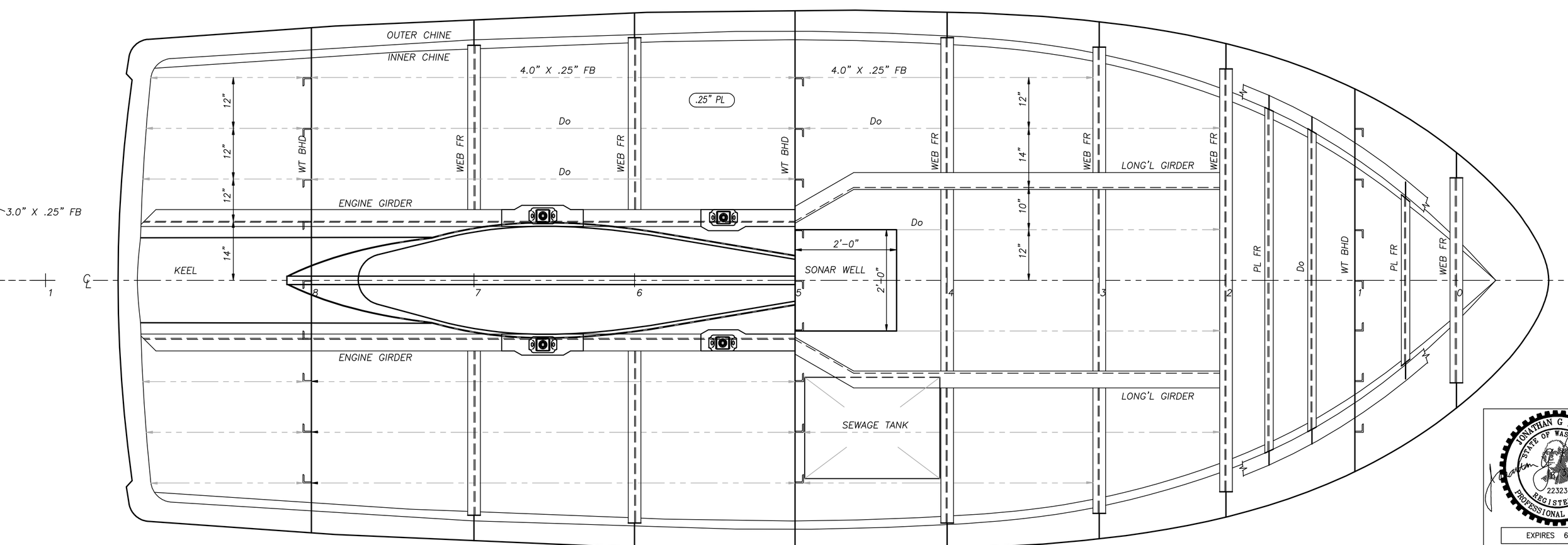

HOLD PLAN

REVISIONS

SYM	ZONE	DESCRIPTION	BY	DATE

GENERAL NOTES

1. ALL WORKMANSHIP AND WELDING SHALL BE IN ACCORDANCE WITH THE AMERICAN BUREAU OF SHIPPING'S "RULES FOR BUILDING AND CLASSING ALUMINUM VESSELS", LATEST EDITION. THIS VESSEL IS NOT CLASSED.
2. ALUMINUM PLATES SHALL BE 5086-H32 OR 5086-H34 FOR PLATES AND 6061-T6 FOR SHAPES. STAINLESS STEEL SHALL BE AISI 316 OR 316L.
3. ALIGNMENT OF STRUCTURAL MEMBERS SHALL BE WITHIN 1/2 THICKNESS OF THINNER MATERIAL JOINED.
4. RATHOLES AND LIMBERS SHALL BE 1 1/2" RADIUS FOR MEMBERS 3 1/2" DEPTH OR LARGER AND 1" RADIUS FOR MEMBERS LESS THAN 3 1/2" DEPTH, EXCEPT AS NOTED.
5. ALL TANKS AND VOIDS TO BE LIMBERED FOR DRAINAGE AND VENTILATION.
6. DIMENSIONS FOR DOORS, WINDOWS, AND HATCHES ARE TO CLEAR OPENINGS EXCEPT AS NOTED.

NO.	TITLE	DRAWING NO.
5	OUTBOARD PROFILE	107050-101-1
4	GENERAL ARRANGEMENTS	107050-101-3
3	INBOARD STRUCTURAL PROFILE	107050-136-1
2	MIDSHIP & TYPICAL SECTIONS	107050-117-1
1	SHELL PLATING AND FRAMING	107050-111-1

REFERENCES

JONATHAN C. PARSONS — STATE OF WASHINGTON — 12321 — REGISTERED PROFESSIONAL ENGINEER — 2007

EXPIRES 6/20/09

PE STAMP NOT VALID WITHOUT SIGNATURE

PROJECT 28' HYDROGRAPHIC LAUNCH

CLIENT NOAA MARINE OPERATIONS CENTER, PACIFIC

TITLE DECK STRUCTURAL PLANS

This drawing/specification remains the property of NOAA Marine Operations Center, Pacific and should neither be copied nor used in manufacturing, nor shown or handed over to a third party or to competing firms without our written consent.

JMC
Jensen MarItime Consultants Inc.
NAVAL ARCHITECTS MARINE ENGINEERS
200 W Mercer Street, Suite 501
Seattle, Washington 98119
www.jensenmaritime.com
Ph 206 284 1274
Fax 206 284 2556

DWN	CES	DATE	6/29/07
CKD		DATE	
APP		DATE	
SCALE	3/4" = 1'-0"		
DWG NO.	107050-131-1	REV	-
SHEET	1 OF 1		

DWG NO:

TITLE: