Operation and Maintenance Manual
QSC8.3 and QSL9 Marine Engines

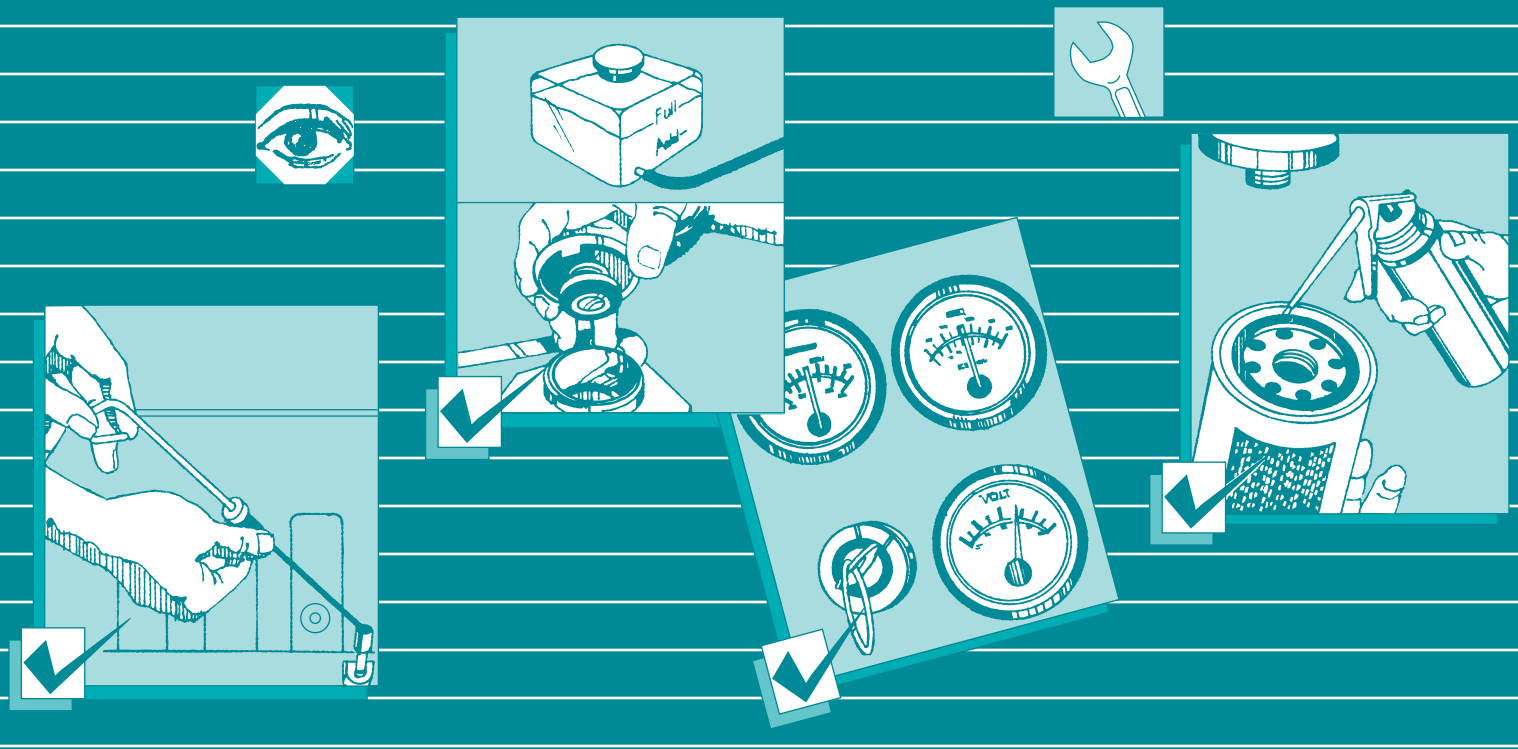

CALIFORNIA
Proposition 65

⚠ **WARNING**: Breathing diesel engine exhaust exposes you to chemicals known to the State of California to cause cancer and birth defects or other reproductive harm.

- Always start and operate the engine in a well-ventilated area.
- If in an enclosed area, vent the exhaust to the outside.
- Do not modify or tamper with the exhaust system.
- Do not idle the engine except as necessary.

For more information go to www.P65warnings.ca.gov/diesel.

Off-Road Equipment

CALIFORNIA
Proposition 65 Warning

Diesel engine exhaust and some of its constituents are known to the State of California to cause cancer, birth defects, and other reproductive harm.

NO POSTAGE
NECESSARY
IF MAILED
IN THE
UNITED STATES

BUSINESS REPLY MAIL
FIRST-CLASS MAIL PERMIT NO. 15 COLUMBUS IN

POSTAGE WILL BE PAID BY ADDRESSEE

PRODUCT REGISTRATION DEPT
M/C 60203
CUMMINS INC
PO BOX 3005
COLUMBUS IN 47202-9982

Cummins Product Registration

First Name

Last Name

Customer Name

Address

City

State

Zip Code

Phone Number

Email Address

Engine Serial Number (Must be 8 digits)

VIN

Date of Purchase (MM-DD-YYYY)

In order to serve you better it is important to register your product.

Use one of the following options to register your product:

- Scan the QR code and complete the registration online.
- Complete the registration online at prodreg.cummins.com
- Fill out and return this card.

Cummins Product Registration

Operation and Maintenance Manual
QSC8.3 and QSL9 Marine Engines

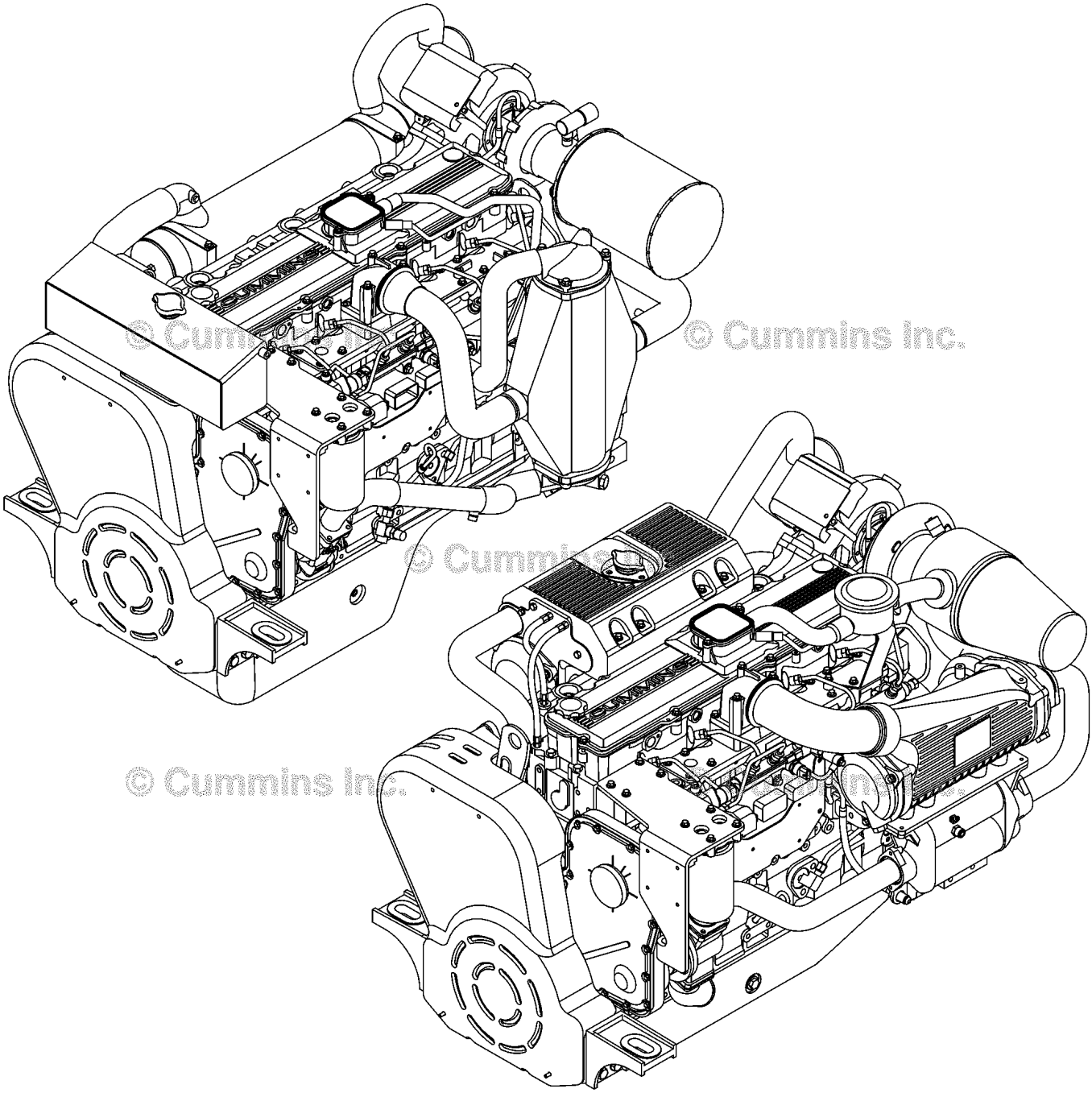

00d00240

Copyright© 2021
Cummins Inc.
All rights reserved

Bulletin 4021571
Printed 02-MARCH-2021

To buy Cummins Parts and Service Manuals, Training Guides, or Tools go to our website at https://store.cummins.com

Foreword

Thank you for depending on Cummins® products. If you have any questions about this product, please contact your Cummins® Authorized Repair Location. You can also visit cumminsengines.com or quickserve.cummins.com for more information, or go to locator.cummins.com for Cummins® distributor and dealer locations and contact information.

Read and follow all safety instructions. See the General Safety instructions in Section i - Introduction.

To buy Cummins Parts and Service Manuals, Training Guides, or Tools go to our website at https://store.cummins.com

Table of Contents

	Section
Introduction	i
Engine and System Identification	E
Operating Instructions	1
Maintenance Guidelines	2
Maintenance Procedures at Daily Interval	3
Maintenance Procedures at 250 Hours or 6 Months	4
Maintenance Procedures at 250 Hours or 1 Year	5
Maintenance Procedures at 500 Hours or 1 Year	6
Maintenance Procedures at 1500 Hours	7
Maintenance Procedures at 3 Years	8
Maintenance Procedures at 2000 Hours or 4 Years	9
Adjustment, Repair, and Replacement	A
System Diagrams	D
Service Literature	L
Service Assistance	S
Seasonal Storage (Marine Only)	SS
Troubleshooting Symptoms	TS
Maintenance Specifications	V
Warranty	W
Back	back

To buy Cummins Parts and Service Manuals, Training Guides, or Tools go to our website at https://store.cummins.com

Important Reference Numbers

Fill in the blank spaces provided below. This will provide a reference whenever service or maintenance is required.

Description	Number	Comments/Additional Information
Engine		
Engine Model		
Engine Serial Number (ESN)		
Control Parts List (CPL)		
Electronic Control Module (ECM) Part Number(s)		
Electronic Control Module (ECM) Serial Number(s)		
Governor Control Module (GCM) (if applicable)		
Belt Part Number(s)		
Filter Part Numbers:		
Air		
Lubricating Oil		
Fuel*		
Fuel (Water Separator)		
Coolant (if equipped)		
Crankcase/Breather (if equipped)		
Eliminator™ Filter Centrifuge (if equipped)		
*The number of fuel filters may vary by application. Record all fuel filters.		
Aftertreatment (if applicable):		
Aftertreatment Diesel Particulate Filter (if equipped)		
Aftertreatment Diesel Exhaust Fluid Dosing Unit Filter (if equipped)		
Aftertreatment Diesel Exhaust Fluid Dosing Air Oil Separator (if equipped)		
Clutch or Marine Gear (if applicable):		
Model		
Serial Number		
Part Number		
Oil Type		
Sea Water Pump:		
Model		
Part Number		

To buy Cummins Parts and Service Manuals, Training Guides, or Tools go to our website at https://store.cummins.com

Section i - Introduction

Section Contents

Page
About the Manual i-2
About i-2
General Information i-2
Acronyms and Abbreviations i-28
General Information i-28
General Cleaning Instructions i-23
Abrasive Pads and Abrasive Paper i-23
Definition of Clean i-23
Fuel System i-26
Gasket Surfaces i-24
Plastic Bead Cleaning i-25
Solvent and Acid Cleaning i-24
Steam Cleaning i-25
General Repair Instructions i-21
General Information i-21
Welding on a Vehicle with an Electronic Controlled Fuel System i-22
General Safety Instructions i-9
Aftertreatment i-14
Best Practices i-9
Common Hazards i-17
Common Substances i-15
Electrical Components i-17
Fuels i-11
Hazardous Substances i-16
Important Safety Notice i-9
Job Safety Assessment i-18
Personal Protective Equipment (PPE) i-10
Power Generation Applications i-14
Work Environment i-9
How to Use the Manual i-3
General Information i-3
Illustrations i-8
General Information i-8
Symbols i-4
General Information i-4
To the Owner and Operator i-1
General Information i-1

To buy Cummins Parts and Service Manuals, Training Guides, or Tools go to our website at https://store.cummins.com

This Page Left Intentionally Blank

To the Owner and Operator

General Information

This guide contains information for the correct operation and maintenance of your Cummins® product. This manual also includes important safety information which can be found in Section i - Introduction.

Thank you for depending on Cummins® products. If you have any questions about this product, please contact your local Cummins® Authorized Repair Location. To locate a Cummins® Authorized Repair Location, refer to Section S - Service Assistance in this manual.

To buy Cummins Parts and Service Manuals, Training Guides, or Tools go to our website at https://store.cummins.com

About the Manual

General Information

Cummins Inc. manuals are created to support Cummins® products. For information on components or fault codes not supplied by Cummins Inc., contact the original equipment manufacturer or supplier.

The content of this manual is based on the information in effect at the time of publish. Cummins Inc. reserves the right to make any changes at any time without obligation. If differences are found between your engine and the information in this manual, contact a Cummins® Authorized Repair Location.

About

Cummins® manuals are divided into sections. Each section consists of procedures which are associated with the title of the section.

When viewing a manual online, the sections of the manual are displayed to the left of the procedure display. If a section is clicked, it will expand to show the procedures within that section. To view a procedure, click on the procedure title.

When viewing a printed manual, the table of contents provides the list of sections and their subsequent procedures, with page numbers located to the right.

To buy Cummins Parts and Service Manuals, Training Guides, or Tools go to our website at https://store.cummins.com

How to Use the Manual

General Information

This manual is divided into the same group system used for previous manuals and the Cummins' filmcard system. Section 00 is organized into a logical sequence of engine disassemble/assemble, all other sections are in numerical sequence. Refer to the Table of Contents at the front of the book to determine the section that details the desired information.

The disassemble/assemble sections of this manual is divided into the same group system used for previous manuals and the Cummins' filmcard system.

Section 00 is organized into a logical sequence of engine disassemble/assemble, all other sections are in numerical sequence. Refer to the Table of Contents at the front of the book to determine the section that details the desired information.

Each section contains the following in sequence:

- Table of Contents
- Required Service Tool Listings
- General Information containing the basic service, maintenance, design and revision information necessary to assist in the rebuild of an engine or a component
- Procedure instructions for the disassembly, inspection, maintenance, and assembly that can be required to rebuild an engine; additional procedures that are **not** necessary during **every** rebuild, but can be necessary, are included. These procedures depend on the length of time an engine has been in service and the conditions of the parts.

All the procedures are identified with a name and a number. Each digit in the procedure number has a specific meaning.

The first three digits of the number refer to the specific section that the procedure can be found within the manual. In this example, “001” represents Section 01 - Cylinder Block. This number will range from 000 to 022.

The second three digits of the number are unique and refer to a specific subject. In this example, “028” represents Cylinder Liner. This number will range from 001 to 999.

Refer to Section V for specifications recommended by Cummins Engine Company, Inc. for your engine. Specifications and torque values for each engine system are given in that section.

NOTE: Discharge of oil or oily water into or upon the water is a direct violation of today's laws. Violators are subject to a penalty of various monetary charges. Dispose of these substances in accordance with standards set by the EPA.

To buy Cummins Parts and Service Manuals, Training Guides, or Tools go to our website at https://store.cummins.com

Symbols

General Information

The symbols are used **only** in printed manuals to help communicate the intent of the instructions. Symbols will **not** appear in the online version of this procedure. When one of the symbols appears in the printed manual, it conveys the meaning defined below.

NOTE: It is possible to have four symbols for each text and graphic combination.

WARNING
Serious personal injury or extensive property damage can result if the warning instructions are not followed.

CAUTION
Minor personal injury can result or a part, and assembly, or the engine can be damaged if the caution instructions are not followed.

Indicates a **REMOVAL** or **Dissassembly** step.

To buy Cummins Parts and Service Manuals, Training Guides, or Tools go to our website at https://store.cummins.com

Indicates an **INSTALLATION** or **ASSEMBLY** step.

INSPECTION is required.

CLEAN the part or assembly.

PERFORM a mechanical or time **MEASUREMENT**.

To buy Cummins Parts and Service Manuals, Training Guides, or Tools go to our website at https://store.cummins.com

LUBRICATE the part or assembly.

Indicates that a **WRENCH** or **TOOL SIZE** will be given.

TIGHTEN to a specific torque.

PERFORM an electrical **MEASUREMENT**.

To buy Cummins Parts and Service Manuals, Training Guides, or Tools go to our website at https://store.cummins.com

Refer to another location in this manual or another publication for additional information.

The component weighs 23kg [50 lbs] or more. To reduce the possibility of personal injury, use a hoist or get assistance to lift the component.

To buy Cummins Parts and Service Manuals, Training Guides, or Tools go to our website at https://store.cummins.com

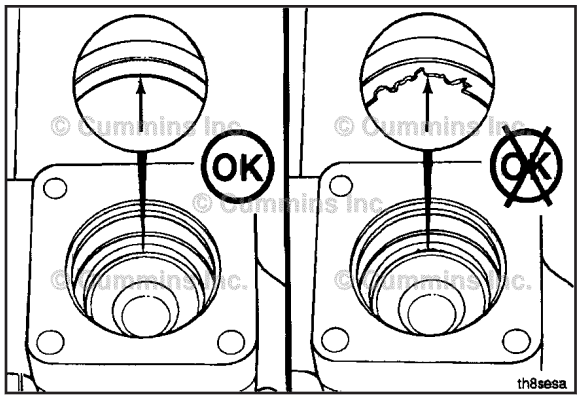

Illustrations

General Information

Some of the illustrations throughout this manual are generic and will **not** look exactly like the engine or parts used in your application. The illustrations can contain symbols to indicate an action required and an acceptable or **not** acceptable condition.

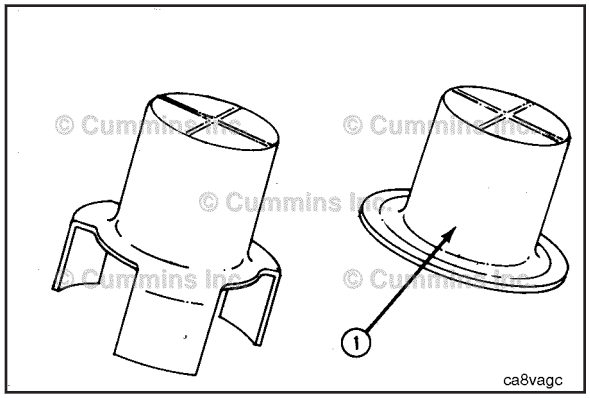

The illustrations are intended to show repair or replacement procedures. The procedure will be the same for all applications, although the illustration can differ.

To buy Cummins Parts and Service Manuals, Training Guides, or Tools go to our website at https://store.cummins.com

General Safety Instructions

Important Safety Notice

Read and understand the safety information and precautions before performing any repair or operating equipment. This procedure contains general safety precautions that **must** be followed to provide personal safety. **Always** follow procedures to mitigate safety concerns.

Work Environment

Follow these recommended practices when servicing products.

- **Always** follow on-site safety requirements.
- **Always** follow local training, certification, authorization, and specific customer requirements. Do **not** work on products unless proper training has been completed to allow safe repair completion. Do **not** operate equipment unless proper training has been completed to allow safe operation..
- Work in a well-ventilated area away from ignition sources.
- If adverse weather conditions are present, take appropriate safety precautions when performing work.
- **Always** be aware of hazardous conditions that may exist in the work environment.

Best Practices

Follow these recommended practices when servicing or operating equipment.

- **Always** wear protective glasses and protective shoes.
- Remove rings, watches, long jewelry, or metallic items.
- Do **not** wear loose fitting or torn clothing, jewelry, long hair, etc.. These increase the risk for personal injury.
- Do **not** perform any repairs, or operate equipment, when fatigued or impaired due to drugs or alcohol.
- **Always** use tools that are in good condition.
- Do **not** work on equipment with the key switch ON or that is running unless otherwise directed by troubleshooting procedures.
- If any work **must** be performed while the key switch is ON or the unit is running, use extreme caution around hot components, moving parts, etc.
- Exercise caution when working on products that have just been turned off. Hot parts may cause burns or ignite or melt common materials.
- Do **not** bleed the fuel system of a hot engine. Contact with hot manifolds or other components can cause a fire.
- Do **not** attempt to rotate the crankshaft by pulling or prying on the fan. **Only** use proper engine barring techniques.
- Do **not** lift components that weigh 23 kg [50 lb] or more. Use mechanical help or seek assistance.
- Exercise caution when working around rotating parts. Rotating parts can cause cuts, mutilation, or strangulation.
- Exercise caution when working on electrical components. High voltages can cause serious injury or death.
- Relieve system pressure as instructed before removing or disconnecting lines, fittings, or related items.
- **Always** test for pressure leaks as instructed.
- **Always** torque fittings and connections to the required specifications. Over or under tightening can damage threads and create leaks.
- **Always** use the same fastener part number, or equivalent, when replacing fasteners.

Perform the following prior to beginning work on any products.

- Shutdown the equipment unless otherwise directed by troubleshooting procedures.
- **Always** allow the product to cool.
- **Always** ensure the product is properly supported by blocks or stands. Do **not** work on a product supported **only** by lifting jacks or hoists.
- Disconnect the battery unless otherwise directed by troubleshooting procedures.
- Disconnect the starting motor, if equipped, unless otherwise directed by troubleshooting procedures.

To buy Cummins Parts and Service Manuals, Training Guides, or Tools go to our website at https://store.cummins.com

- Place a "Do NOT Operate" tag in the operator area or near the product controls.
- Become familiar with the tools required for performing the task at hand and how to use those tools correctly.
- Use only genuine Cummins or Cummins Recon replacement parts as instructed.

Personal Protective Equipment (PPE)

To reduce the possibility of personal injury, personal protective equipment (PPE) should be utilized. Various types of PPE are listed below. Use proper judgment to determine which types of PPE are required for a given task. **Always** meet on-site safety regulations for required PPE. Proper maintenance of safety equipment **must** be practiced. Integrity of safety equipment **must** be checked to ensure equipment functionality is maintained.

Eye Protection

Eye protection **must always** be worn. Wear appropriate eye protection based on the task being completed. Types of eye protection to consider are listed below.

- Safety glasses. Exposure to flying particles or debris, chemicals or caustic liquids, gases or vapors.
- Polarized safety glasses. Working in outdoor or bright lighting environments.
- Over-the-glass safety glasses. Add protection to prescription glasses.
- Safety goggles. Handling caustic liquids or chemicals.
- Shade or arc rated eyewear. Exposure to welding. Use appropriate filter ratings.

Foot Protection

Protective shoes **must always**be worn. Wear appropriate foot protection based on the task being completed. Types of protective footwear to consider are listed below.

- Steel toed shoes. Exposure to falling or rolling objects. Working with or around parts, tools, and equipment.
- Chemical resistant. Exposure to chemicals and other fluids.
- Overshoes and overboots. Add protection to everyday work shoes.
- Foot, toe, and metatarsal guards. Add protection to everyday work shoes.
- Electrical hazard safety toe shoes. Exposure to electrical hazards.
- Leather footwear or shoe protectors. Exposure to welding or arc flash.
- Cold protection. Exposure to cold weather.

Head and Face Protection

Wear appropriate face protection based on the task being completed. Types of head and face protection to consider are listed below.

- Hard hats. Exposure varies. Consider welding, heat, or arc-rated.
- Visors. Exposure varies. Consider welding, heat, or arc-rated.
- Face liners. Exposure to cold weather.
- Face shields. Exposure to liquid splash. Handling caustic liquids or chemicals.

Hand Protection

Wear appropriate type and fit of gloves based on the task being completed. Types of protective gloves to consider are listed below.

- Heat resistant or insulated. Exposure to hot items.
- Flame resistant. Exposure to welding or arc flash.
- Impact resistant. Performing repetitive impact and vibration work. Using pneumatic tools.
- Impervious. Exposure to high pressure fluids.
- Chemical resistant. Exposure to chemicals, fluids, or batteries.
- Cut resistant. Handling sharp objects or tools.
- Cold weather. Exposure to cold weather.

Hearing Protection

To buy Cummins Parts and Service Manuals, Training Guides, or Tools go to our website at https://store.cummins.com

When working around operating equipment, appropriately rated hearing protection should be worn. Types of hearing protection to consider are listed below.

- Single use ear plugs.
- Pre-formed ear plugs.
- Ear muffs.

Protective Clothing

Wear appropriate protective clothing based on the task being completed. Types of protective clothing to consider are listed below.

- Flame resistant. Exposure to electrical hazards. Exposure to oil and gas or generator set applications. Performing welding.
- Chemical resistant. Exposure to chemicals.
- High visibility. Exposure to reduced visibility working environments. Working on mining, oil and gas, or sites with large equipment.

Respiratory Protection

Wear appropriate respiratory protection based on the task being completed. Types of respiratory protection to consider are listed below.

- Disposable respirators. Exposure to dust and particles, welding fumes, nuisance odors, nuisance level acid gas.
- Reusable respirators. Exposure to cleaning, machining, welding, sanding, grinding, etc.

Fall Protection

Utilize fall protection if a task is being completed more than 1.2 m [4 ft] above a solid surface. Types of fall protection to consider are listed below.

- Fall harness and lanyard combinations.
- Safety nets.
- Guardrails.

Fuels

Follow these recommended practices when interacting with equipment that uses different fuel types. For information regarding proper handling of various substances, refer to the manufacturer's safety data sheet.

Diesel Fuel

- Protect eyes.
- Protect skin.
- **Always** test for fuel leaks as instructed.
- Do **not** dilute.
- Avoid sparks, arcing switches and equipment, cigarettes, pilot lights, flames, and other sources of ignition.
- Provide extra ventilation to the work area.
- Do **not** troubleshoot or repair fuel leaks while the engine is running.
- If material is spilled, avoid contact and dispersal with runoff, soil, waterways, drains, and sewers. Absorb with sand, clay, or commercial absorbent. Transfer to containers and neutralize the material. Flush spill area with soap and excess water.
- Report spills effecting water source contamination to local authorities immediately.
- Proper disposal is required. Dispose of in accordance with local and environmental regulations.
- **Always** torque fittings and connections to the required specifications. over or under tightening can damage threads and create leaks.

Gasoline

- Protect eyes.
- Protect skin.
- **Always** be alert for the smell of gas.

To buy Cummins Parts and Service Manuals, Training Guides, or Tools go to our website at https://store.cummins.com

- **Always** test for fuel leaks as instructed.
- Do **not** dilute.
- Avoid sparks, arcing switches and equipment, cigarettes, pilot lights, flames, and other sources of ignition.
- Vapors accumulate near the floor. Check the work floor, sumps, and low lying areas for ignition sources before servicing equipment..
- Provide extra ventilation to the work area.
- Do **not** troubleshoot or repair fuel leaks while the engine is running.
- If material is spilled, avoid contact and dispersal with runoff, soil, waterways, drains, and sewers. Absorb with sand, clay, or commercial absorbent. Transfer to containers and neutralize the material. Flush spill area with soap and excess water.
- Report spills effecting water source contamination to local authorities immediately.
- Proper disposal is required. Dispose of in accordance with local and environmental regulations.
- **Always** torque fittings and connections to the required specifications. over or under tightening can damage threads and create leaks.

Biodiesel

- Protect eyes.
- Protect skin.
- **Always** test for fuel leaks as instructed.
- Do **not** dilute.
- Avoid sparks, arcing switches and equipment, cigarettes, pilot lights, flames, and other sources of ignition.
- Vapors accumulate near the floor. Check the work floor, sumps, and low lying areas for ignition sources before servicing equipment..
- Provide extra ventilation to the work area.
- Do **not** troubleshoot or repair fuel leaks while the engine is running.
- If material is spilled, avoid contact and dispersal with runoff, soil, waterways, drains, and sewers. Absorb with sand, clay, or commercial absorbent. Transfer to containers and neutralize the material. Flush spill area with soap and excess water.
- Report spills effecting water source contamination to local authorities immediately.
- Proper disposal is required. Dispose of in accordance with local and environmental regulations.
- **Always** torque fittings and connections to the required specifications. over or under tightening can damage threads and create leaks.

Compressed Natural Gas

- Protect eyes.
- Protect skin.
- **Always** be alert for the smell of gas. Compressed natural gas is typically treated with an odor producing chemical for leak detection. Non-refined sources of natural gas (landfill gas, biogas, coal bed gas, wellhead gas, etc.) can **not always** be detected by smell.
- **Always** test for fuel leaks as instructed. Odorant can fade.
- Upon entering a room or approaching a vehicle where the smell of gas is present, immediately shutoff all engines and ignition sources.
- Natural gas ignites when there is a 5% - 15% mixture in the air. Asphyxiation can occur when concentration reaches 21% or more.
- Do **not** start equipment or nearby equipment until a suspected gas leak is corrected and the area is ventilated.
- Avoid sparks, arcing switches and equipment, cigarettes, pilot lights, flames, and other sources of ignition.
- Work in areas that do **not** share common ventilation with areas containing ignition sources.
- Store and service natural gas fueled equipment in large, well-ventilated areas, or outside.
- Provide extra ventilation to the work area.

To buy Cummins Parts and Service Manuals, Training Guides, or Tools go to our website at https://store.cummins.com

- Natural gas accumulates near the ceiling. Check the ceiling of the work area for ignition sources before servicing equipment.
- **Only** disconnect gas lines in a well-ventilated area.
- Do **not** troubleshoot or repair gas leaks while the engine is running.
- Natural gas ignition systems produce high voltage during operation. Do **not** touch ignition wiring or components while the engine is operating. If necessary, use **only** insulated tools.
- Natural gas exhaust systems operate at higher temperatures than similar diesel exhaust systems. Do **not** touch exhaust components. Do **not** route lines or hoses which deteriorate from heat exposure near exhaust components or in the flow path of the exhaust.
- **Always** torque fittings and connections to the required specifications. over or under tightening can damage threads and create leaks.

Liquefied Natural Gas

- Protect eyes.
- Protect skin.
- **Always** be alert for the smell of gas. Liquefied natural gas may **not** have an odor. Non-refined sources of natural gas (landfill gas, biogas, coal bed gas, wellhead gas, etc.) can **not always** be detected by smell.
- **Always** test for fuel leaks as instructed. Odorant can fade.
- Upon entering a room or approaching a vehicle where the smell of gas is present, immediately shutoff all engines and ignition sources.
- Natural gas ignites when there is a 5% - 15% mixture in the air. Asphyxiation can occur when concentration reaches 21% or more.
- Do **not** start equipment or nearby equipment until a suspected gas leak is corrected and the area is ventilated.
- Avoid sparks, arcing switches and equipment, cigarettes, pilot lights, flames, and other sources of ignition.
- Work in areas that do **not** share common ventilation with areas containing ignition sources.
- Store and service natural gas fueled equipment in large, well-ventilated areas, or outside.
- Provide extra ventilation to the work area.
- Natural gas accumulates near the ceiling. Check the ceiling of the work area for ignition sources before servicing equipment.
- **Only** disconnect gas lines in a well-ventilated area.
- Do **not** troubleshoot or repair gas leaks while the engine is running.
- Natural gas ignition systems produce high voltage during operation. Do **not** touch ignition wiring or components while the engine is operating. If necessary, use **only** insulated tools.
- Natural gas exhaust systems operate at higher temperatures than similar diesel exhaust systems. Do **not** touch exhaust components. Do **not** route lines or hoses which deteriorate from heat exposure near exhaust components or in the flow path of the exhaust..
- Liquefied natural gas is stored in vehicle tanks at extremely cold temperatures. If there is a liquefied natural gas spill, evacuate the area immediately and do not attempt to make contact with the liquid.
- **Always** torque fittings and connections to the required specifications. over or under tightening can damage threads and create leaks.
- Vapors accumulate near the floor. Check the work floor, sumps, and low lying areas for ignition sources before servicing equipment.

Liquefied Petroleum Gas

- Protect eyes.
- Protect skin.
- **Always** be alert for the smell of gas. Liquefied petroleum gas is typically treated with an odor producing chemical for leak detection.
- **Always** test for fuel leaks as instructed. Odorant can fade.
- Upon entering a room or approaching a vehicle where the smell of gas is present, immediately shutoff all engines and ignition sources.

To buy Cummins Parts and Service Manuals, Training Guides, or Tools go to our website at https://store.cummins.com

- Do **not** start equipment or nearby equipment until a suspected gas leak is corrected and the area is ventilated.
- Avoid sparks, arcing switches and equipment, cigarettes, pilot lights, flames, and other sources of ignition.
- Work in areas that do **not** share common ventilation with areas containing ignition sources.
- Store and service natural gas fueled equipment in large, well-ventilated areas, or outside.
- Provide extra ventilation to the work area.
- Liquefied petroluem gas accumulates near the floor. Check the work floor, sumps, and low lying areas for ignition sources before servicing equipment.
- **Only** disconnect gas lines in a well-ventilated area.
- Do **not** troubleshoot or repair gas leaks while the engine is running.
- Liquefied petroleum gas ignition systems produce high voltage during operation. Do **not** touch ignition wiring or components while the engine is operating. If necessary, use **only** insulated tools.
- Liquefied petroleum gas exhaust systems operate at higher temperatures than similar diesel exhaust systems. Do **not** touch exhaust components. Do **not** route lines or hoses which deteriorate from heat exposure near exhaust components or in the flow path of the exhaust..
- Liquefied natural gas is stored in vehicle tanks at extremely cold temperatures. If there is a liquefied natural gas spill, evacuate the area immediately and do not attempt to make contact with the liquid.
- **Always** torque fittings and connections to the required specifications. over or under tightening can damage threads and create leaks.

Power Generation Applications

Follow these recommended practices when interacting with equipment in generator set applications.

Power generation applications produce high voltage during operation. When servicing a generator set, the following safety precautions **must** be taken.

- Remove any debris from the generator set.
- Keep the floor clean and dry throughout servicing
- Service access doors **must** be secured in the "open" position before working on enclosed generator sets.
- Use insulated or non-conducting tools.
- Prevent accidental or remote starting. Disconnect the starting battery cables. Disconnect the negative (-) terminal first.
- Isolate all auxiliary supplies.
- Switch the generator set control panel "off."
- Place a "Do **Not** Operate" tag on the control panel.
- Lock the generator set circuit breaker in the "Open" position.
- Activate the manual "Emergency Stop" device.
- Do **not** step on the generator set when servicing, entering, or leaving the generator room.

Aftertreatment

Follow these recommended practices when interacting with equipment that utilize aftertreatment systems. For information regarding proper handling of various substances, refer to the manufacturer's safety data sheet.

Diesel Exhaust Fluid

- Avoid breathing vapor or mist.
- Protect eyes. In case of contact with eyes, flush with water for a minimum of 15 minutes.
- Protect skin. In case of contact with skin, wash with soap and water.
- Do **not** ingest. If ingested, contact a physician immediately.

Diesel Particulate Filter

- Protect eyes.
- Protect skin.

To buy Cummins Parts and Service Manuals, Training Guides, or Tools go to our website at https://store.cummins.com

- Avoid stirring up exhaust particulate dust.
- Avoid inhalation of exhaust particulate dust. Wear a dust mask. If respiratory irritation or discomfort occurs, leave the dusty area. Utilize breathing assistance or oxygen if necessary.
- Elevated concentrations of metals in the form of dust, soot, and contaminants are contained in these filters. Health regulations may exist for the materials found in these filters such as Zinc, Molybdenum, polynuclear aromatic hydrocarbons. Potentially toxic materials found in these filters are oxides of calcium, zinc, phosphorous, silicon, sulfur, and iron.
- Proper disposal of the exhaust dust and filter are required. Dispose of in accordance with local and environmental regulations.
- Diesel particulate filter maintenance **must** be completed by appropriately trained personnel.

Selective Catalytic Reduction (SCR) Catalyst

- Protect eyes.
- Protect skin.
- Avoid stirring up exhaust catalyst dust.
- Avoid inhalation of exhaust catalyst dust. Wear a dust mask. If respiratory irritation or discomfort occurs, leave the dusty area. Utilize breathing assistance or oxygen if necessary.
- Do **not** cut open exhaust catalyst assemblies.
- Proper disposal of the exhaust catalyst is required. Dispose of in accordance with local and environmental regulations.

Oxidation Catalysts

Types of Oxidation Catalysts may include, but are not limited to the following.

- Diesel Oxidation Catalyst (DOC)
- 3-way Oxidation Catalyst

When working with oxidation catalysts, perform the following.

- Protect eyes.
- Protect skin.
- Avoid stirring up exhaust catalyst dust.
- Avoid inhalation of exhaust catalyst dust. Wear a dust mask. If respiratory irritation or discomfort occurs, leave the dusty area. Utilize breathing assistance or oxygen if necessary.
- Do **not** cut open exhaust catalyst assemblies.

Common Substances

Follow these recommended practices when interacting with the following substances. For information regarding proper handling of various substances, refer to the manufacturer's safety data sheet.

Coolant

- Coolant is also referred to as antifreeze.
- Protect eyes. In case of contact with eyes, flush with water for a minimum of 15 minutes. Receive medical attention immediately.
- Protect skin. In case of contact with skin, wash with soap and water. Remove contaminated clothing. If injection occurs, it is a medical emergency. Receive medical attention immediately.
- Do **not** ingest. If ingested, drink excess water for dilution and seek medical attention.
- Do **not** pour used antifreeze into containers that have been used to store other chemicals or products, such as oil or gasoline, unless they have been thoroughly cleaned.
- If material is spilled, avoid contact and dispersal with runoff, soil, waterways, drains, and sewers. Provide adequate ventilation to the area. Absorb with sand, clay, or commercial absorbent. Transfer to containers and neutralize the material. Flush spill area with soap and excess water.
- Report spills effecting water source contamination to local authorities immediately.
- Proper disposal is required. Dispose of in accordance with local and environmental regulations.

To buy Cummins Parts and Service Manuals, Training Guides, or Tools go to our website at https://store.cummins.com

Liquid Nitrogen

- Work in a well-ventilated area.
- Protect eyes. In case of contact with eyes, flush with water for a minimum of 15 minutes. Receive medical attention immediately.
- Protect skin. In case of contact with skin, receive medical attention immediately.
- Wear protective clothing and gloves that insulate.
- Handle items with tongs or wire hooks.
- Avoid prolonged breathing of liquid nitrogen vapors. Utilize breathing assistance or oxygen if necessary.

Lubricating Oil

See Lubricating Oil in the "Hazardous Substances" step.

Refrigerant

- Protect eyes. In case of contact with eyes, flush with water for a minimum of 15 minutes. In case of frostbite, use lukewarm water, not hot. Seek medical attention if irritation continues.
- Protect skin. Wear leather or insulated gloves. In case of contact with skin, wash with soap and water. Seek medical attention if irritation continues.
- Proper disposal is required. Dispose of in accordance with local and environmental regulations.
- **Only** disconnect liquid refrigerant lines in a well-ventilated area. liquid refrigerant systems **must** be properly emptied and filled using equipment that prevents the release of refrigerant gas into the atmosphere. Federal law requires capturing and recycling refrigerant in the United States of America.

Solvents

- Follow the manufacturer's instructions for safe handling practices.
- Follow the manufacturer's recommendations for use.
- Some solvents are flammable and toxic..
- Protect eyes. In case of contact with eyes, follow manufacturer's recommendations.
- Protect skin. In case of contact with skin, follow manufacturer's recommendations.
- Dispose of in accordance with manufacturer's recommendations.

Starting Aids (Starting Fluid)

- Do **not** use starting fluid if the intake air heater option is used.
- Do **not** use volatile cold starting aids in underground mine or tunnel operations. The local United States Bureau of Mines inspector can provide more information and instructions.
- Avoid sparks, arcing switches and equipment, cigarettes, pilot lights, flames, and other sources of ignition.
- Work in a well-ventilated area.
- Avoid inhalation.

Hazardous Substances

Hazardous substances are known to some state and federal agencies to be carcinogenic and cause reproductive harm. Hazardous substances that may be encountered during service events are listed below.

Diesel Engine Exhaust

- Protect eyes. In case of contact with eyes, flush with water for a minimum of 15 minutes.
- Protect skin. In case of contact with skin, wash with soap and water.
- Avoid inhalation.

Lubricating Oil

- Protect eyes. In case of contact with eyes, flush with water for a minimum of 15 minutes.
- Protect skin. In case of contact with skin, wash with soap and water.
- Do **not** ingest. If ingested, contact a physician immediately..
- Proper disposal is required. Dispose of in accordance with local and environmental regulations.

To buy Cummins Parts and Service Manuals, Training Guides, or Tools go to our website at https://store.cummins.com

- Do **not** allow water droplets to enter a container of hot oil. A violent reaction can result.

Mercury

- Protect eyes. In case of contact with eyes, flush with water for a minimum of 15 minutes.
- Protect skin. In case of contact with skin, wash with soap and water.
- Do **not** ingest. If ingested, contact a physician immediately.
- Proper disposal is required. Dispose of in accordance with local and environmental regulations.

Vanadium Pentoxide

- Can be found in some selective catalytic reduction (SCR) catalysts.
- Protect eyes. In case of contact with eyes, flush with water for a minimum of 15 minutes.
- Protect skin. In case of contact with skin, wash with soap and water.
- Do **not** ingest. If ingested, contact a physician immediately.
- Avoid inhalation of vapors or airborne particles.
- Proper disposal is required. Dispose of in accordance with local and environmental regulations.

Electrical Components

Follow these recommended practices when interacting with electrical components.

Batteries

- Protect eyes. Wear safety glasses or goggles. In case of battery acid contact with eyes, flush with water for a minimum of 15 minutes. Receive medical attention immediately.
- Protect skin. Wear rubber gloves and a chemical apron. In case of battery acid contact with skin or clothing, rinse with water for several minutes. Avoid spreading the acid. Receive medical attention immediately.
- Do **not** open the battery caps with your face over or near the battery.
- Remove rings, watches, long jewelry, or metallic items when working with or near batteries.
- Ventilate the battery compartment before servicing the battery.
- Work in a well-ventilated area.
- Avoid sparks, arcing switches and equipment, cigarettes, pilot lights, flames, and other sources of ignition.
- Use insulated or non-conducting tools.
- Neutralize static buildup by contacting the nearest ground surface before working on a battery.
- Do **not** lift batteries by the posts.
- Do **not** touch both battery terminals with your bare hands at the same time.
- Disconnect the negative (-) battery cable first.
- Attach the negative (-) battery cable last.

Common Hazards

Follow these recommended practices when interacting with equipment as the following hazards may exist.

High Temperature Area

Be alert for high temperature areas which may cause severe burns. High temperature areas may be encountered in the following situations.

- On products that have just been turned off.
- On or around exhaust related components (turbocharger, aftertreatment systems, etc).
- In exhaust gas flow paths.
- Contacting hot fluid lines, tubes, or compartments.

Recommended Practices:

- Allow components to cool before servicing. Verify the temperature of the component. Utilize an infrared gun, temperature sensor, temperature gauge, or other reliable method to determine component temperature. Take appropriate precautions before starting work.

To buy Cummins Parts and Service Manuals, Training Guides, or Tools go to our website at https://store.cummins.com

- Protect eyes.
- Protect skin. Wear insulated gloves.
- Ensure surrounding items do not come in contact with hot components or exhaust. Contact may ignite or melt those materials.

Heavy Objects

Be alert when working with heavy objects.

- Do **not** lift components that weigh 23 kg [50 lb] or more. Use mechanical help or seek assistance.
- Use mechanical help to move items whenever possible. Make sure the load is securely fastened to the equipment.
- Make sure lifting devices, like chains, hooks, slings, etc., are in good condition and are rated for the correct capacity before use.
- Make sure lifting devices are positioned correctly before use.
- Use a spreader bar when necessary.
- If the item can be lifted manually, squat to lift and lower the item. Do **not** bend at the waist.
- Maintain balance when lifting items by keeping feet apart or staggered if possible.
- If the item must be carried, make sure the path is clear when carrying the item to, and placing the item in, the desired location.

Pressurized Areas

Be alert for pressurized areas. Pressurized areas may be encountered in the following situations.

- Air, Oil, Fuel, and Cooling systems.
- When disconnecting or removing lines, fittings, or related items.
- When disconnecting a device from a pressurized system.
- When removing or loosening caps on tanks or pressurized systems.

Injuries that may result when interacting with pressurized areas are listed below.

- High pressure spray can penetrate the skin. Serious injury or death may result.
- Hot fluid spray can cause burns. See "High Temperature Area."

Recommended Practices:

- Protect skin. Wear impervious gloves. If skin penetration from high pressure spray occurs, it is a medical emergency. Receive medical attention immediately.
- Check for pressure leaks as instructed. **Never** check for pressure leaks with your hand.
- Allow product to cool before accessing pressurized areas.
- Relieve system pressure as instructed.
- Slowly loosen fill caps to relieve pressure before servicing.

Job Safety Assessment

Completing a Job Safety Assessment (JSA) prior to performing work helps identify job safety hazards and prevent incidents. Use the guidelines below to assess if a situation is safe or at risk prior to performing designated work. If deteremined to be at risk, take appropriate precautions to prepare for, or eliminate, the hazard. If the risks are uncontrollable, consult a knowledgeable resource to find a safe practice solution. A knowledgeable resource may include, but is not limited to, one of the following:

- Site supervisor
- Customer
- Work supervisor

Always check with the site where work is being performed to determine if safety assessment documentation is required.

Work Practices

Job Safety Analysis.

To buy Cummins Parts and Service Manuals, Training Guides, or Tools go to our website at https://store.cummins.com

- Assess the job to identify safety hazards that may occur during the repair event.

Ascending or Descending

- Maintain 3 points of contact when using steps, ladders, or entering and exiting a unit.

Communication

- When working with others, make sure you understand what each other is doing to safely complete the task.

Eyes On Hands and Work.

- Confirm if you will be able to maintain an unobstructed view of your hands at all times while performing the task.

Eyes On Path

- Watch for hazards in your path to avoid trip or slip hazards. Examples are pits, platform edges, etc.

Line Of Fire

- Position yourself so that you avoid striking against, or being struck by, anything that can swing, fall, or roll.

Pinch Point

- Prevent exposure of all parts of your body to a nip hazard or pinch point.

Rushing

- Take adequate time to safely perform the job. Do **not** rush or take short cuts.

Follow Procedures

- Utilize QuickServe® Online or other standard procedures when available.
- Make sure the procedures are correct and safe.

Ergonomics

Back-Bending and Twisting

- Avoid bending forward more than 45 at your waist.
- Avoid working with your back twisted with loads over 23 kg [50 lb].

Knee

- Avoid bending your knee more than 90.
- Avoid kneeling for more than 4 hours per day.

Lifting and Lowering

- Squat to pick up parts.
- Keep loads close to the body when lifting or carrying.
- Use a team lift or a lifting device if the object is more than 23 kg [50 lb].

Pulling or Pushing

- Pull with your arms.
- Push with your legs.
- Avoid exerting more force than necessary.
- Avoid moving heavy load(s) too quickly.

Tools and Equipment

Selection

- Select the correct tool or equipment to perform the task.

Condition

- Confirm the tool or equipment is free of defects before use.
- Confirm that safety devices are in place before use.

Use

- Use the tool or equipment as directed.
- Follow the manufacturer's instructions.

Personal Protective Equipment (PPE)

To buy Cummins Parts and Service Manuals, Training Guides, or Tools go to our website at https://store.cummins.com

Eye, Face, and Head Protection

- Confirm the eye, face, or head protection you plan to use are adequate for performing the task at hand.

Foot Protection

- Confirm the foot protection you plan to use is adequate for performing the task at hand in the current environment.

Fall Protection

- Fall protection should be used if you are working more than 1.2 m [4 ft] above the floor.
- Use fall protection if you have been properly trained to do so. If you are not trained to use fall protection, allow someone who has received proper training to perform the task.

Hand Protection

- Avoid exposing hands to cuts or burns while completing the task.
- Confirm the proper glove type is being used for the task at hand. Examples are cut-resistant, chemical-resistant, electric shock-resistant, electric arc flash, welding, etc.

Hearing Protection

- Hearing protection should be worn when required or recommended.

Body Protection

- Body parts should be protected from work hazards.
- Avoid contact with sharp edges, hot surfaces, etc.

Work Procedures

Training

- Confirm if you have received task and safety training for the job being performed.

Working Alone

- Avoid working alone.
- Avoid working where you are **not** able to be seen or heard by another person.
- If you **must** work alone, notify others of your location and schedule check-in times.

Lockout and Tagout

- Lock out or tag out energy sources before work. Examples are electrical, mechanical, hydraulic, and pneumatic.

Barricades and Warnings

- Mark overhead work areas with barricade tape or signs.
- Mark open floor hazards with barricade tape, signs, or cones.

Confined Space

- Confirm if a confined space entry permit is required.
- If required, confirm the permit is posted, signed, and dated correctly.

Hot Work

- Confirm a functional fire extinguisher is readily available.
- Maintain separation between ignition sources and fuel sources.

Place Wheel Chocks

- Place wheel chocks at either the front or back tire of the unit prior to starting the task.

Spotter

- Use a spotter when moving a customer's unit.
- Confirm the driver can see and hear the spotter when moving.

Housekeeping (The 5 S's - Scrap or Segregate, Set to Order, Spotless, Standardize, and Sustain)

- Remove parts, extension cords, air hoses, and liquids from the work area that may cause trip, slip, or fall hazards.

To buy Cummins Parts and Service Manuals, Training Guides, or Tools go to our website at https://store.cummins.com

General Repair Instructions

General Information

This engine or system incorporates the latest technology at the time it was manufactured; yet, it is designed to be repaired using normal repair practices performed to quality standards.

WARNING

Cummins Inc. does not recommend or authorize any modifications or repairs to components except for those detailed in Cummins Service Information. In particular, unauthorized repair to safety-related components can cause personal injury or death. Below is a partial listing of components classified as safety-related:

1 Air Compressor
2 Air Controls
3 Air Shutoff Assemblies
4 Balance Weights
5 Cooling Fan
6 Fan Hub Assembly
7 Fan Mounting Bracket(s)
8 Fan Mounting Capscrews
9 Fan Hub Spindle
10 Flywheel
11 Flywheel Crankshaft Adapter
12 Flywheel Mounting Capscrews
13 Fuel Shutoff Assemblies
14 Fuel Supply Tubes
15 Lifting Brackets
16 Throttle Controls
17 Turbocharger Compressor Casing
18 Turbocharger Oil Drain Line(s)
19 Turbocharger Oil Supply Line(s)
20 Turbocharger Turbine Casing
21 Vibration Damper Mounting Capscrews
22 Manual Service Disconnect
23 High Voltage Interlock Loop
24 High Voltage Connectors/Connections and Harnesses
25 High Voltage Battery System
26 Power Inverter
27 Generator Motor
28 Clutch Pressure Plate

- Follow all safety instructions noted in the procedures
- Follow the manufacturer's recommendations for cleaning solvents and other substances used during repairs. Some solvents have been identified by government agencies as toxic or carcinogenic. Avoid excessive breathing, ingestion and contact with such substances. **Always** use good safety practices with tools and equipment
- Provide a clean environment and follow the cleaning instructions specified in the procedures
- The engine or system and its components **must** be kept clean during any repair. Contamination of the engine, system or components will cause premature wear.
- All components **must** be kept clean during any repair. Contamination of the components will cause premature wear.

To buy Cummins Parts and Service Manuals, Training Guides, or Tools go to our website at https://store.cummins.com

- Perform the inspections specified in the procedures
- Replace all components or assemblies which are damaged or worn beyond the specifications
- Use genuine Cummins new or ReCon® service parts and assemblies

- The assembly instructions have been written to use again as many components and assemblies as possible. When it is necessary to replace a component or assembly, the procedure is based on the use of new Cummins or Cummins ReCon® components. All of the repair services described in this manual are available from all Cummins Distributors and most Dealer locations.

- Follow the specified disassembly and assembly procedures to reduce the possibility of damage to the components

Complete rebuild instructions are available in the service manual which can be ordered or purchased from a Cummins Authorized Repair Location. Refer to Section L — Service Literature for ordering instructions.

Welding on a Vehicle with an Electronic Controlled Fuel System

⚠CAUTION⚠

Disconnect both the positive (+) and negative (-) battery cables from the low voltage battery before welding on the vehicle. Attach the welder ground cable no more than 0.61 meters [2 feet] from the part being welded. Do not connect the ground clamp of the welder to any of the sensors, wiring harness, electronic control units or the components. Direct welding of any electronic components must not be attempted. Sensors, wiring harness, and electronic control unit should be removed if nearby welding will expose these components to temperatures beyond normal operation. Additionally, all electronic control unit connectors must be disconnected

To buy Cummins Parts and Service Manuals, Training Guides, or Tools go to our website at https://store.cummins.com

General Cleaning Instructions

Definition of Clean

Parts **must** be free of debris that can contaminate any engine system. This does **not** necessarily mean they have to appear as new.

Sanding gasket surfaces until the factory machining marks are disturbed adds no value and is often harmful to forming a seal. It is important to maintain surface finish and flatness tolerances to form a quality sealing surface. Gaskets are designed to fill small voids in the specified surface finish.

Sanding gasket surfaces where edge-molded gaskets are used is most often unnecessary. Edge-molded gaskets are those metal carriers with sealing material bonded to the edges of the gasket to seal while the metal portion forms a metal to metal joint for stability. Any of the small amounts of sealing material that can stick to the parts are better removed with a blunt-edged scraper on the spots rather than spending time polishing the whole surface with an air sander or disc.

For those gaskets that do **not** have the edge molding, nearly all have a material that contains release agents to prevent sticking. Certainly this is **not** to say that some gaskets are **not** difficult to remove because the gasket has been in place a long time, has been overheated or the purpose of the release agent has been defeated by the application of some sealant. The object however is just to remove the gasket without damaging the surfaces of the mating parts without contaminating the engine (don't let the little bits fall where they can not be removed).

Bead blasting piston crowns until the dark stain is removed is unnecessary. All that is required is to remove the carbon build-up above the top ring and in the ring grooves. There is more information on bead blasting and piston cleaning later in this document.

Cummins Inc. does **not** recommend sanding or grinding the carbon ring at the top of cylinder liners until clean metal is visible. The liner will be ruined and any signs of a problem at the top ring reversal point (like a dust-out) will be destroyed. It is necessary to remove the carbon ring to provide for easier removal of the piston assembly. A medium bristle, high quality, steel wire wheel that is rated above the rpm of the power tool being used will be just as quick and there will be less damage. Yes, one **must** look carefully for broken wires after the piston is removed but the wires are more visible and can be attracted by a magnet.

Oil on parts that have been removed from the engine will attract dirt in the air. The dirt will adhere to the oil. If possible, leave the old oil on the part until it is ready to be cleaned, inspected and installed, and then clean it off along with any attracted dirt. If the part is cleaned then left exposed it can have to be cleaned again before installation. Make sure parts are lubricated with clean oil before installation. They do **not** need to be oiled all over but do need oil between moving parts (or a good lube system priming process conducted before cranking the engine).

Bead blasting parts to remove exterior paint is also usually unnecessary. The part will most likely be painted again so all that needs happen is remove any loose paint.

Abrasive Pads and Abrasive Paper

The keyword here is "abrasive". There is no part of an engine designed to withstand abrasion. That is they are all supposed to lock together or slide across each other. Abrasives and dirt particles will degrade both functions.

⚠ WARNING ⚠

Abrasive material must be kept out of or removed from oil passages and parts wear points. Abrasive material in oil passages can cause bearing and bushing failures that can progress to major component damage beyond reuse. This is particularly true of main and rod bearings.

Cummins Inc. does **not** recommend the use of emery cloth or sand paper on any part of an **assembled** engine or component including but **not** limited to removing the carbon ridge from cylinder liners or to clean block decks or counterbores.

Great care **must** be taken when using abrasive products to clean engine parts, particularly on partially assembled engines. Abrasive cleaning products come in many forms and sizes. All of them contain aluminum oxide particles, silicon carbide, or sand or some other similar hard material. These particles are harder than most of the parts in the engine. Since they are harder, if they are pressed against softer material they will either damage the material or become embedded in it. These materials fall off the holding media as the product is used. If the products are used with power equipment the particles are thrown about the engine. If the particles fall between two moving parts, damage to the moving parts is likely.

If particles that are smaller than the clearance between the parts while they are at rest (engine stopped), but larger than the running clearance then damage will occur when the parts move relative to each other (engine started). While the engine is running and there is oil pressure, particles that are smaller than the bearing clearance are likely to pass between the parts without damage and be trapped in the oil filter. However, particles larger than the bearing clearance will remove material from one part and can become embedded in one of the parts. Once embedded in one part it will

To buy Cummins Parts and Service Manuals, Training Guides, or Tools go to our website at https://store.cummins.com

abrade the other part until contact is no longer being made between the two parts. If the damage sufficiently degrades the oil film, the two parts will come into contact resulting in early wear-out or failure from lack of effective lubrication.

Abrasive particles can fly about during cleaning it is **very** important to block these particles from entering the engine as much as possible. This is particularly true of lubricating oil ports and oil drilling holes, especially those located downstream of the lubricating oil filters. Plug the holes instead of trying to blow the abrasive particles and debris with compressed air because the debris is often simply blown further into the oil drilling.

All old gasket material **must** be removed from the parts gasket surfaces. However, it is **not** necessary to clean and polish the gasket surface until the machining marks are erased. Excessive sanding or buffing can damage the gasket surface. Many newer gaskets are of the edge molded type (a steel carrier with a sealing member bonded to the steel). What little sealing material that can adhere is best removed with a blunt-edged scraper or putty knife. Cleaning gasket surfaces where an edge-molded gasket is used with abrasive pads or paper is usually a waste of time.

⚠ WARNING ⚠

Excessive sanding or grinding the carbon ring from the top of the cylinder liners can damage the liner beyond reuse. The surface finish will be damaged and abrasive particles can be forced into the liner material which can cause early cylinder wear-out or piston ring failures.

Tape off or plug all openings to any component interior before using abrasive pads or wire brushes. If really necessary because of time to use a power tool with abrasive pads, tape the oil drillings closed or use plug and clean as much of the surface as possible with the tool but clean around the oil hole/opening by hand so as to prevent contamination of the drilling. Then remove the tape or plug and clean the remaining area carefully and without the tool. DO NOT use compressed air to blow the debris out of oil drilling on an assembled engine! More likely than **not**, the debris can be blown further into the drilling. Using compressed air is fine if both ends of the drilling are open but that is rarely the case when dealing with an assembled engine.

Gasket Surfaces

The object of cleaning gasket surfaces is to remove any gasket material, not refinish the gasket surface of the part.

Cummins Inc. does **not** recommend any specific brand of liquid gasket remover. If a liquid gasket remover is used, check the directions to make sure the material being cleaned will **not** be harmed.

Air powered gasket scrapers can save time but care must be taken to **not** damage the surface. The angled part of the scraper must be against the gasket surface to prevent the blade from digging into the surface. Using air powered gasket scrapers on parts made of soft materials takes skill and care to prevent damage.

Do **not** scrape or brush across the gasket surface if at all possible.

Solvent and Acid Cleaning

Several solvent and acid-type cleaners can be used to clean the disassembled engine parts (other than pistons. See Below). Experience has shown that the best results can be obtained using a cleaner that can be heated to 90° to 95° Celsius (180° to 200° Fahrenheit). Kerosene emulsion based cleaners have different temperature specifications, see below. A cleaning tank that provides a constant mixing and filtering of the cleaning solution will give the best results. Cummins Inc. does not recommend any specific cleaners. Always follow the cleaner manufacturer's instructions. Remove all the gasket material, o-rings, and the deposits of sludge, carbon, etc., with a wire brush or scraper before putting the parts in a cleaning tank. Be careful not to damage any gasket surfaces. When possible, steam clean the parts before putting them in the cleaning tank.

⚠ WARNING ⚠

When using solvents, acids, or alkaline materials for cleaning, follow the manufacturers recommendations for use. Wear goggles and protective clothing to reduce the possibility of personal injury.

Experience has shown that kerosene emulsion based cleaners perform the best to clean pistons. These cleaners should **not** be heated to temperature in excess of 77°C (170°F). The solution begins to break down at temperatures in excess of 82°C (180°F) and will be less effective.

Do **not** use solutions composed mainly of chlorinated hydrocarbons with cresols, phenols and/or cresylic components. They often do **not** do a good job of removing deposits from the ring groove and are costly to dispose of properly.

Solutions with a pH above approximately 9.5 will cause aluminum to turn black; therefore do **not** use high alkaline solutions.

Chemicals with a pH above 7.0 are considered alkaline and those below 7.0 are acidic. As you move further away from the neutral 7.0, the chemicals become highly alkaline or highly acidic.

Remove all the gasket material, o-rings, and the deposits of sludge, carbon, etc., with a wire brush or scraper before putting the parts in a cleaning tank. Be careful to **not** damage any gasket surfaces. When possible use hot high

To buy Cummins Parts and Service Manuals, Training Guides, or Tools go to our website at https://store.cummins.com

pressure water or steam clean the parts before putting them in the cleaning tank. Removing the heaviest dirt before placing in the tank will allow the cleaner to work more effectively and the cleaning agent will last longer.

Rinse all the parts in hot water after cleaning. Dry completely with compressed air. Blow the rinse water from all the capscrew holes and the oil drillings.

If the parts are **not** to be used immediately after cleaning, dip them in a suitable rust proofing compound. The rust proofing compound **must** be removed from the parts before assembly or installation on the engine.

Steam Cleaning

Steam cleaning can be used to remove all types of dirt that can contaminate the cleaning tank. It is a good method for cleaning the oil drillings and coolant passages

WARNING

When using a steam cleaner, wear safety glasses or a face shield, as well as protective clothing. Hot steam can cause serious personal injury.

Do **not** steam clean the following components:

- Electrical Components
- Wiring Harnesses
- Belts and Hoses
- Bearings (ball or taper roller)
- Electronic Control Module (ECM)
- ECM Connectors
- Capacitive Coil Driver Module (CCD)
- Ignition Coils and Leads
- NOx Sensor
- Fuel Control Valve
- Throttle Driver and Actuator.

Plastic Bead Cleaning

Cummins Inc. does **not** recommend the use of glass bead blast or walnut shell media on **any** engine part. Cummins Inc. recommends using **only** plastic bead media, Part Number 3822735 or equivalent on any engine part. **Never** use sand as a blast media to clean engine parts. Glass and walnut shell media when **not** used to the media manufacturer's recommendations can cause excess dust and can embed in engine parts that can result in premature failure of components through abrasive wear.

Plastic bead cleaning can be used on many engine components to remove carbon deposits. The cleaning process is controlled by the use of plastic beads, the operating pressure and cleaning time.

CAUTION

Do not use bead blasting cleaning methods on aluminum pistons skirts or the pin bores in any piston, piston skirt or piston crown. Small particles of the media will embed in the aluminum or other soft metal and result in premature wear of the cylinder liner, piston rings, pins and pin bores. Valves, turbocharger shafts, etc., can also be damaged. Follow the cleaning directions listed in the procedures.

CAUTION

Do not contaminate wash tanks and tank type solvent cleaners with the foreign material and plastic beads. Remove the foreign material and plastic beads with compressed air, hot high pressure water or steam before placing them in tanks or cleaners. The foreign material and plastic beads can contaminate the tank and any other engine parts cleaned in the tank. Contaminated parts may cause failures from abrasive wear.

Plastic bead blasting media, Part Number 3822735, can be used to clean all piston ring grooves. Do **not** sure any bead blasting media on piston pin bores or aluminum skirts.

Follow the equipment manufacturer's cleaning instructions. Make sure to adjust the air pressure in the blasting machine to the bead manufacturer's recommendations. Turning up the pressure can move material on the part and cause the plastic bead media to wear out more quickly. The following guidelines can be used to adapt to manufacturer's instructions:

1 Bead size: U.S. size Number 16 — 20 for piston cleaning with plastic bead media, Part Number 3822735

2 Operating Pressure — 270 kPa (40 psi) for piston cleaning. Pressure should not cause beads to break.

3 Steam clean or wash the parts with solvent to remove all of the foreign material and plastic beads after cleaning. Rinse with hot water. Dry with compressed air.

⚠CAUTION⚠

The bead blasting operation must not disturb the metal surface. If the metal surface is disturbed the engine can be damaged due to increased parts clearance or inadequate surface finish on parts that move against other parts.

When cleaning pistons, it is **not** necessary to remove all the dark stain from the piston. All that is necessary is to remove the carbon on the rim and in the ring grooves. This is best done by directing the blast across the part as opposed to straight at the part. If the machining marks are disturbed by the blasting process, then the pressure is too high or the blast is being held on one spot too long. The blast operation **must not** disturb the metal surface.

Walnut shell bead blast material is sometimes used to clean ferrous metals (iron and steel). Walnut shell blasting produces a great amount of dust particularly when the pressure if the air pressure on the blasting machine is increased above media manufacturer's recommendation. Cummins Inc. recommends **not** using walnut shell media to clean engine parts due to the risk media embedment and subsequent contamination of the engine.

Cummins Inc. now recommends glass bead media **NOT** used to clean any engine parts. Glass media is too easily embedded into the material particularly in soft materials and when air pressures greater than media manufacturer's recommend are used. The glass is an abrasive so when it is in a moving part, that part is abrading all the parts in contact with it. When higher pressures are used the media is broken and forms a dust of a very small size that floats easily in the air. This dust is very hard to control in the shop, particularly if **only** compressed air (and not hot water) is used to blow the media after it is removed from the blasting cabinet (blowing the part off inside the cabinet may remove large accumulations but never removes all the media).

Bead blasting is best used on stubborn dirt/carbon build-up that has **not** been removed by first steam/higher pressure washing then washing in a heated wash tank. This is particularly true of pistons. Steam and soak the pistons first then use the plastic bead method to safely remove the carbon remaining in the grooves (instead of running the risk of damaging the surface finish of the groove with a wire wheel or end of a broken piston ring. Make sure the parts are dry and oil free before bead blasting to prevent clogging the return on the blasting machine.

Always direct the bead blaster nozzle "across" rather than directly at the part. This allows the bead to get under the unwanted material. Keep the nozzle moving rather than hold on one place. Keeping the nozzle directed at one-place too long causes the metal to heat up and be moved around. Remember that the spray is **not** just hitting the dirt or carbon. If the machining marks on the piston groove or rim have been disturbed then there has **not** been enough movement of the nozzle and/or the air pressure is too high.

Never bead blast valve stems. Tape or use a sleeve to protect the stems during bead blasting. Direct the nozzle across the seat surface and radius rather than straight at them. The object is to remove any carbon build up and continuing to blast to remove the stain is a waste of time.

Fuel System

When servicing any fuel system components, which can be exposed to potential contaminants, prior to disassembly, clean the fittings, mounting hardware, and the area around the component to be removed. If the surrounding areas are **not** cleaned, dirt or contaminants can be introduced into the fuel system.

The internal drillings of some injectors are extremely small and susceptible to plugging from contamination. Some fuel injection systems can operate at very high pressures. High pressure fuel can convert simple particles of dirt and rust into a highly abrasive contaminant that can damage the high pressure pumping components and fuel injectors.

Electrical contact cleaner can be used if steam cleaning tools are **not** available. Use electrical contact cleaner rather than compressed air, to wash dirt and debris away from fuel system fittings. Diesel fuel on exposed fuel system parts attracts airborne contaminants.

Choose lint free towels for fuel system work.

Cap and plug fuel lines, fittings, and ports whenever the fuel system is opened. Rust, dirt, and paint can enter the fuel system whenever a fuel line or other component is loosened or removed from the engine. In many instances, a good practice is to loosen a line or fitting to break the rust and paint loose, and then clean off the loosened material.

When removing fuel lines or fittings from a new or newly-painted engine, make sure to remove loose paint flakes/chips that can be created when a wrench contacts painted line nuts or fittings, or when quick disconnect fittings are removed.

Fuel filters are rated in microns. The word micron is the abbreviation for a micrometer, or one millionth of a meter. The micron rating is the size of the smallest particles that will be captured by the filter media. As a reference, a human hair

To buy Cummins Parts and Service Manuals, Training Guides, or Tools go to our website at https://store.cummins.com

is 76 microns [0.003 in] in diameter. One micron measures 0.001 mm [0.00004 in.]. The contaminants being filtered out are smaller than can be seen with the human eye, a magnifying glass, or a low powered microscope.

The tools used for fuel system troubleshooting and repair are to be cleaned regularly to avoid contamination. Like fuel system parts, tools that are coated with oil or fuel attract airborne contaminants. Remember the following points regarding your fuel system tools:

- Fuel system tools are to be kept as clean as possible.
- Clean and dry the tools before returning them to the tool box.
- If possible, store fuel system tools in sealed containers.
- Make sure fuel system tools are clean before use.

To buy Cummins Parts and Service Manuals, Training Guides, or Tools go to our website at https://store.cummins.com

Acronyms and Abbreviations

General Information

The following list contains some of the acronyms and abbreviations used in this manual.

ANSI	American National Standards Institute
API	American Petroleum Institute
ASTM	American Society of Testing and Materials
ATDC	After Top Dead Center
bhp	Brake Horsepower
BTU	British Thermal Unit
BTDC	Before Top Dead Center
°C	Celsius
CAN	Controller Area Network
CARB	California Air Resources Board
CCA	Cold Cranking Amperes
CCV	Closed Crankcase Ventilation
CES	Cummins Engineering Standard
CIB	Customer Interface Box
C.I.D.	Cubic Inch Displacement
CNG	Compressed Natural Gas
CO	Carbon Monoxide
CPL	Control Parts List
cSt	Centistokes
DEF	Diesel Exhaust Fluid
DOC	Diesel Oxidation Catalyst
DPF	Diesel Particulate Filter
ECM	Engine Control Module
EFC	Electronic Fuel Control
EGR	Exhaust Gas Recirculation
EPA	Environmental Protection Agency
ESN	Engine Serial Number
°F	Fahrenheit
ft-lb	Foot-Pound Force
FMI	Failure Mode Indentifier
GVW	Gross Vehicle Weight
Hg	Mercury
hp	Horsepower
H_2O	Water
inHg	Inches of Mercury
in H_2 0	Inches of Water
ICM	Ignition Control Module
IEC	International Electrotechnical Commission
JSA	Job Safety Assessment
km/l	Kilometers per Liter
kPa	Kilopascal
LNG	Liquefied Natural Gas
LPG	Liquefied Petroleum Gas
LTA	Low Temperature Aftercooler
MCRS	Modular Common Rail System

To buy Cummins Parts and Service Manuals, Training Guides, or Tools go to our website at https://store.cummins.com

MIL	Malfunction Indicator Lamp
MPa	Megapascal
mph	Miles Per Hour
mpq	Miles Per Quart
N•m	Newton-meter
NOx	Nitrogen Oxides
NG	Natural Gas
O2	Oxygen
OAT	Organic Acid Technology
OBD	On-Board Diagnostics
OEM	Original Equipment Manufacturer
OSHA	Occupational Safety and Health Administration
PCCNet	Power Command Control Network
PID	Parameter Identification Descriptions
PPE	Personal Protective Equipment
ppm	Parts Per Million
psi	Pounds Per Square Inch
PTO	Power Takeoff
QSOL	QuickServe® Online
REPTO	Rear Engine Power Takeoff
RGT	Rear Gear Train
rpm	Revolutions Per Minute
SAE	Society of Automotive Engineers
SCA	Supplemental Coolant Additive
SCR	Selective Catalytic Reduction
STC	Step Timing Control
SID	Subsystem Identification Descriptions
TDC	Top Dead Center
TSB	Technical Service Bulletin
ULSD	Ultra Low Sulfur Diesel
VDC	Volts of Direct Current
VGT	Variable Geometry Turbocharger
VS	Variable Speed
VSS	Vehicle Speed Sensor

To buy Cummins Parts and Service Manuals, Training Guides, or Tools go to our website at https://store.cummins.com

Notes

Section E - Engine and System Identification

Section Contents

Page
Cummins® Service Engine Model Product Identification E-22
General Information..... E-22
Engine Diagrams E-4
Engine Views..... E-4
Engine Identification E-1
Cummins® Engine Nomenclature..... E-2
Engine Control Module Dataplate..... E-3
Engine Dataplate..... E-1
Fuel Injection Pump Dataplate..... E-2

To buy Cummins Parts and Service Manuals, Training Guides, or Tools go to our website at https://store.cummins.com

This Page Left Intentionally Blank

Engine Identification

Engine Dataplate

Marine Applications

The engine dataplate provides important facts about the engine. The engine serial number (ESN) and control parts list (CPL) provide information for service and ordering parts. The engine dataplate **must not** be changed unless approved by Cummins Inc.

The dataplate for marine engines is located on the top front of the valve cover for both the QSC and QSL engines.

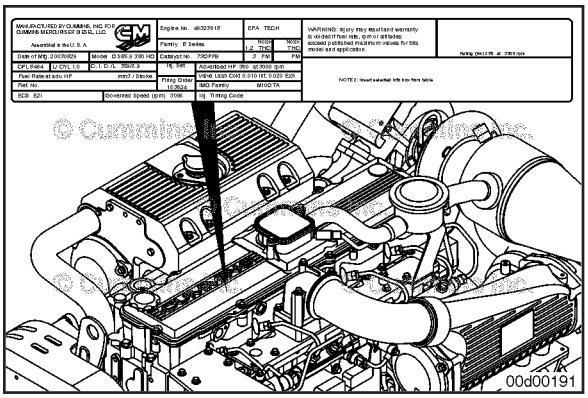

If the engine dataplate (1) is **not** legible, the engine serial number (ESN) (2) can be found on the engine block, on top of the lubricating oil cooler housing. Additional engine information is on the electronic control module (ECM) dataplate.

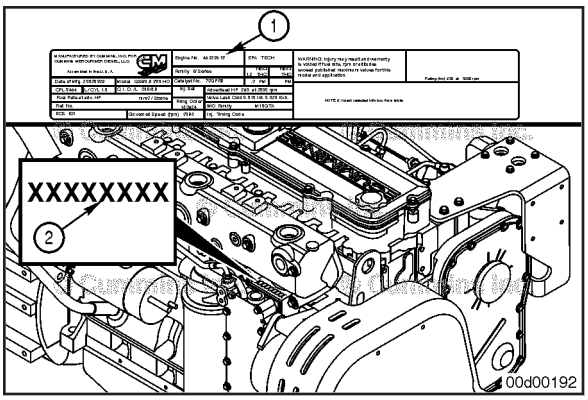

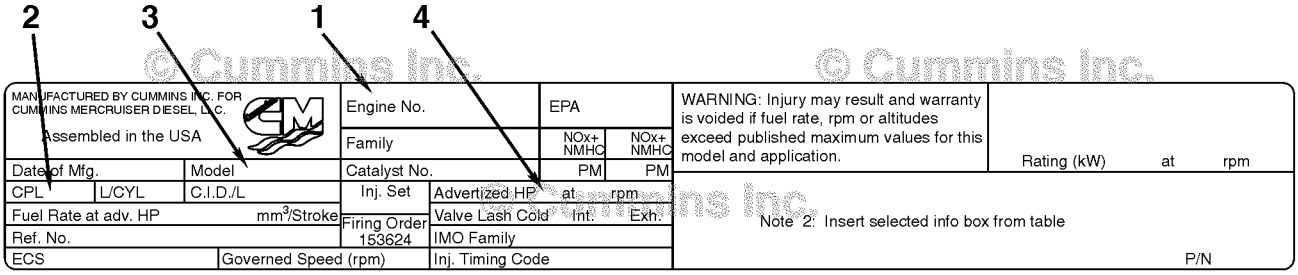

00200123

Have the following engine data available when communicating with a Cummins® Authorized Repair Location:

1 Engine serial number (ESN)
2 Control parts list (CPL)
3 Model
4 Horsepower and rpm rating.

NOTE: Depending on the manufacturing plant, calibration data may also be be found on theengine dataplate.

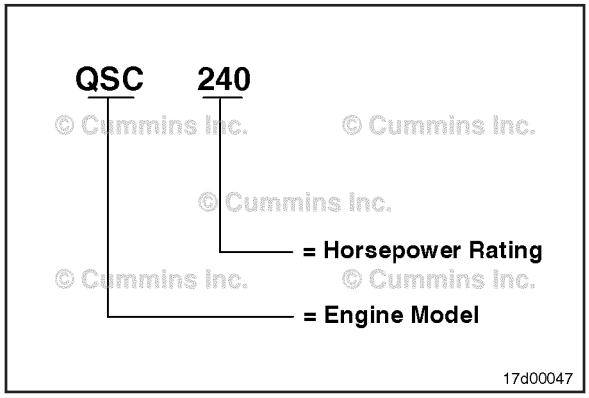

Cummins® Engine Nomenclature

The Cummins® engine nomenclature provides the engine model and horsepower rating.

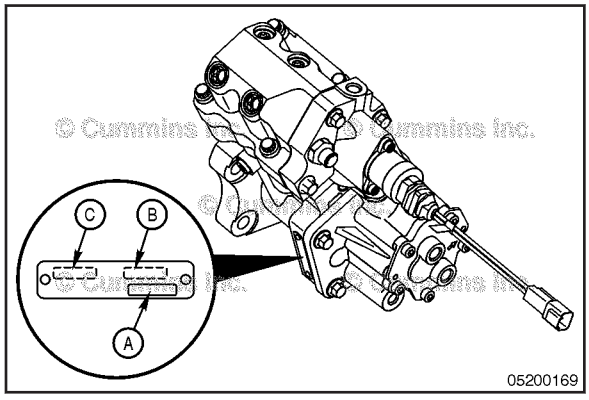

Fuel Injection Pump Dataplate

The Cummins® Accumulator Pump System (CAPS) fuel injection pump dataplate is located on the side of the injection pump. The dataplate contains the following information:

- Cummins® part number
- Pump serial number
- Factory code.

To buy Cummins Parts and Service Manuals, Training Guides, or Tools go to our website at https://store.cummins.com

Engine Control Module Dataplate

Marine Applications

The ECM dataplate is located on the front of the ECM.

The following information is found on the ECM dataplate:

- ECM part number (PN)
- ECM serial number (SN)
- ECM date code (DC)
- Engine serial number (ESN)
- ECM Code (identifies the software in the ECM).

NOTE: The presence of an ECM dataplate depends on the manufacturing plant and the date the engine was manufactured. If an ECM dataplate was **not** installed by the manufacturing plant, calibration data can be found on the engine dataplate.

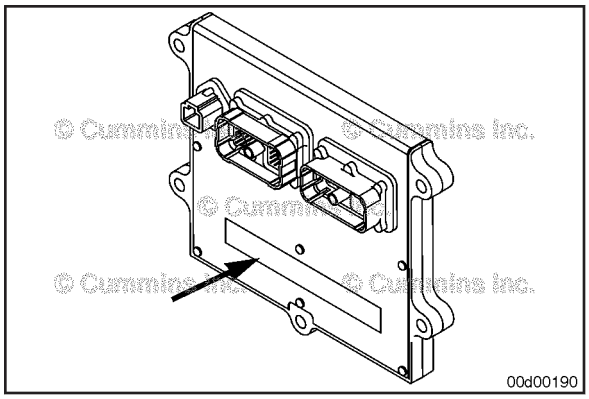

To buy Cummins Parts and Service Manuals, Training Guides, or Tools go to our website at https://store.cummins.com

Engine Diagrams

Engine Views

Marine Applications

The following illustrations provide the locations of the major external engine components, filters, and other service and maintenance points. Some external components will be at different locations for different engine models.

The illustrations are **only** a reference to show a typical engine.

To buy Cummins Parts and Service Manuals, Training Guides, or Tools go to our website at https://store.cummins.com

Engine Diagrams

Engine Views

Marine Applications

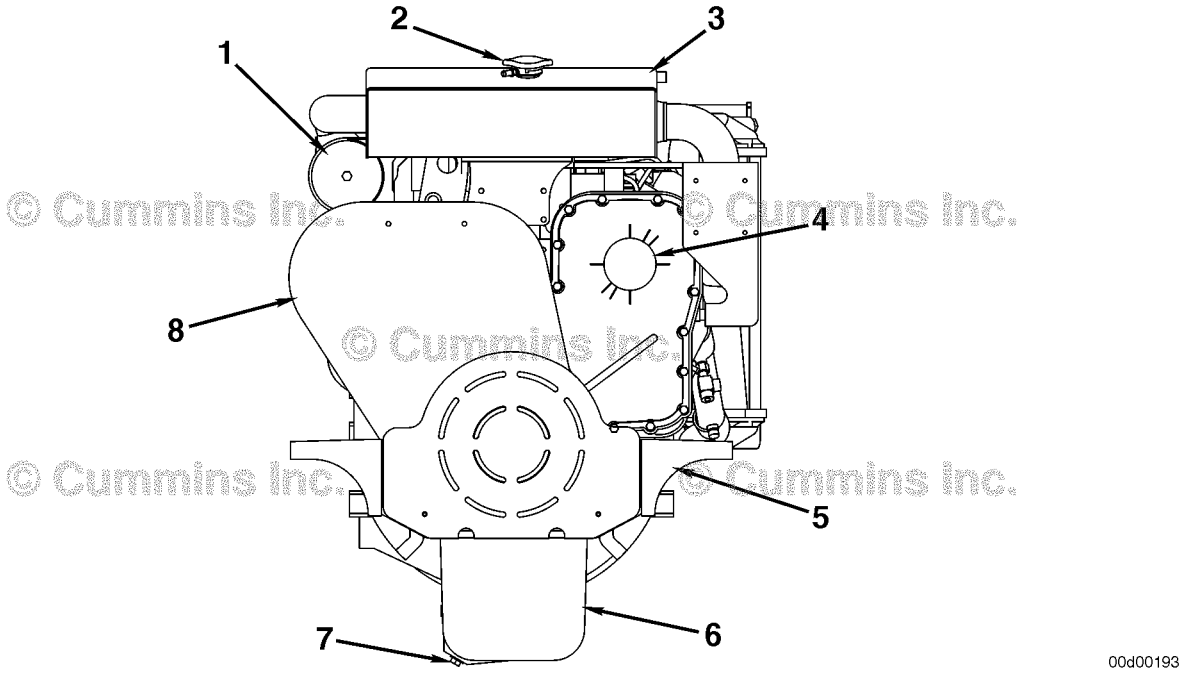

Front View QSL9 Marine (Sea water cooled)

1 Heat exchanger
2 Coolant fill cap
3 Expansion tank
4 Timing case cover
5 Engine mounting bracket
6 Oil pan
7 Oil pan drain plug
8 Belt and pulley guard.

To buy Cummins Parts and Service Manuals, Training Guides, or Tools go to our website at https://store.cummins.com

Engine Diagrams

Engine Views

Marine Applications

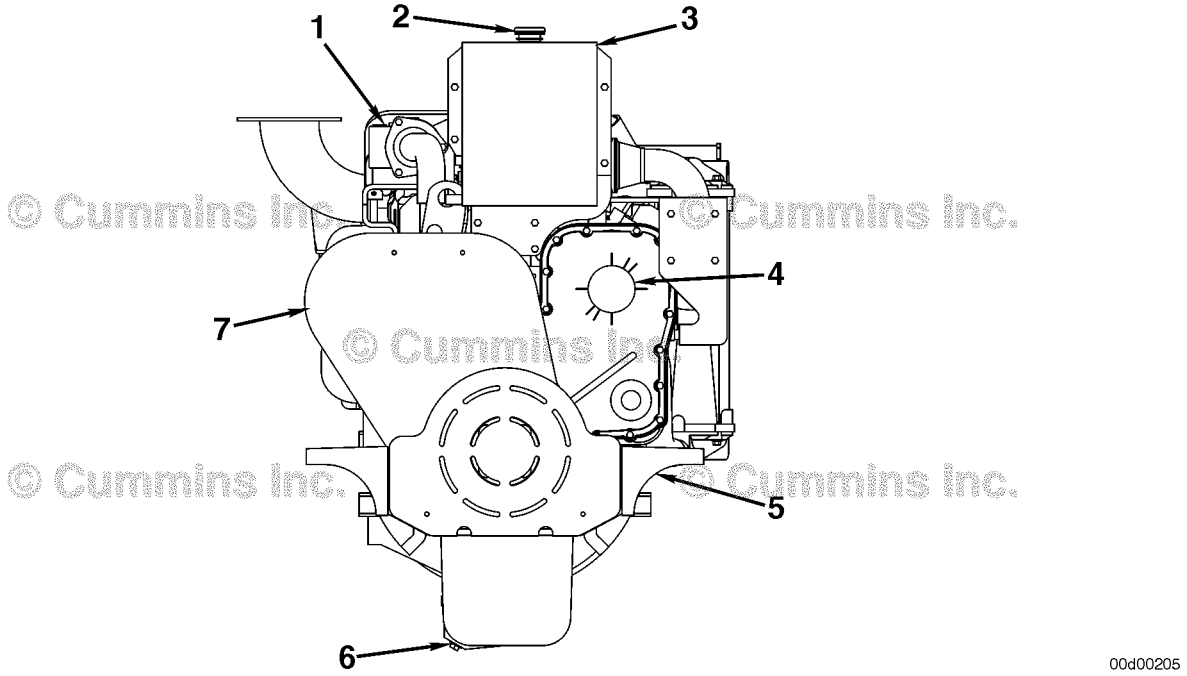

Front View QSL9 Marine (Keel Cooled)

1 Keel cooler thermostat housing
2 Coolant fill cap
3 Expansion tank
4 Timing case cover
5 Engine mounting bracket
6 Oil pan drain plug
7 Belt and pulley guard.

To buy Cummins Parts and Service Manuals, Training Guides, or Tools go to our website at https://store.cummins.com

Engine Diagrams

Engine Views

Marine Applications

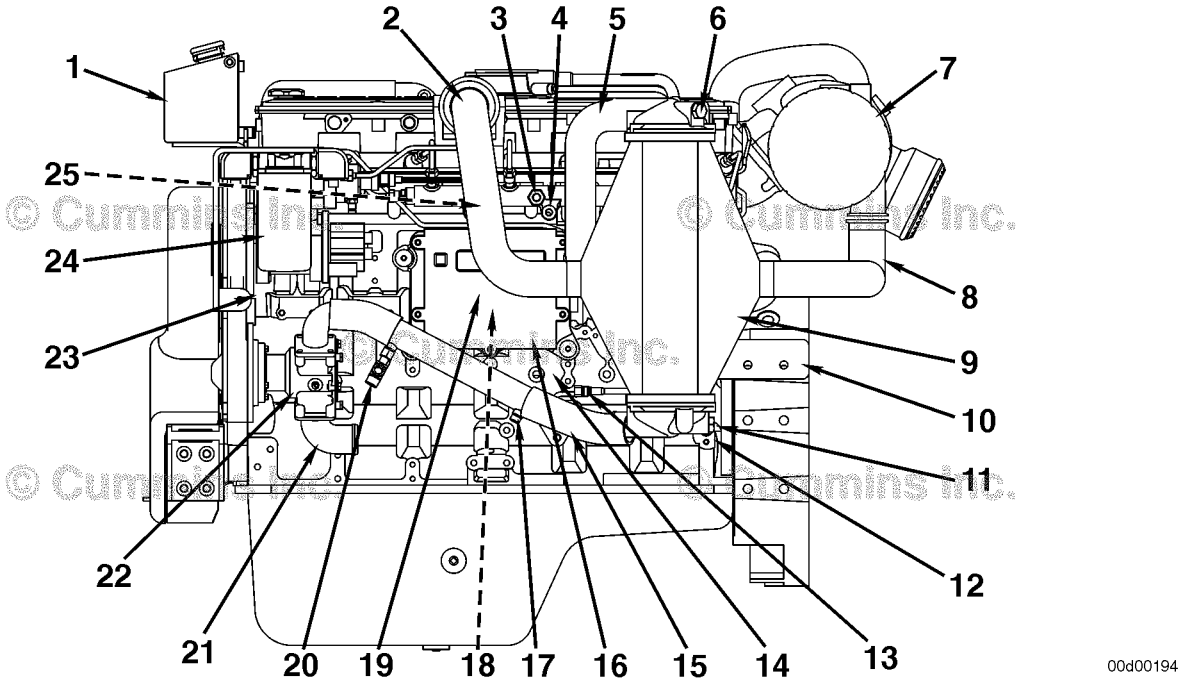

Left View (Port) QSL9 Marine (Sea Water Cooled)

1 Expansion tank
2 Aftercooler air outlet
3 Intake manifold temperature sensor
4 Intake manifold pressure sensor
5 Aftercooler sea water outlet
6 Zinc anode
7 Air cleaner or filter
8 Aftercooler air inlet
9 Aftercooler housing
10 Flywheel housing
11 Zinc anode
12 Crankshaft speed sensor
13 Fuel inlet from fuel tank
14 Oil pressure sensor
15 Aftercooler sea water inlet
16 Electronic control module (ECM)
17 Fuel return from engine to fuel cooler
18 Fuel lift pump (behind ECM)
19 SIM module (mounted on ECM bracket)
20 Fuel return to fuel tank
21 Sea water pump inlet
22 Sea water pump
23 Camshaft position sensor

To buy Cummins Parts and Service Manuals, Training Guides, or Tools go to our website at https://store.cummins.com

24 Fuel filter

25 Fuel rail pressure sensor (behind aftercooler air outlet).

To buy Cummins Parts and Service Manuals, Training Guides, or Tools go to our website at https://store.cummins.com

Engine Diagrams

Engine Views

Marine Applications

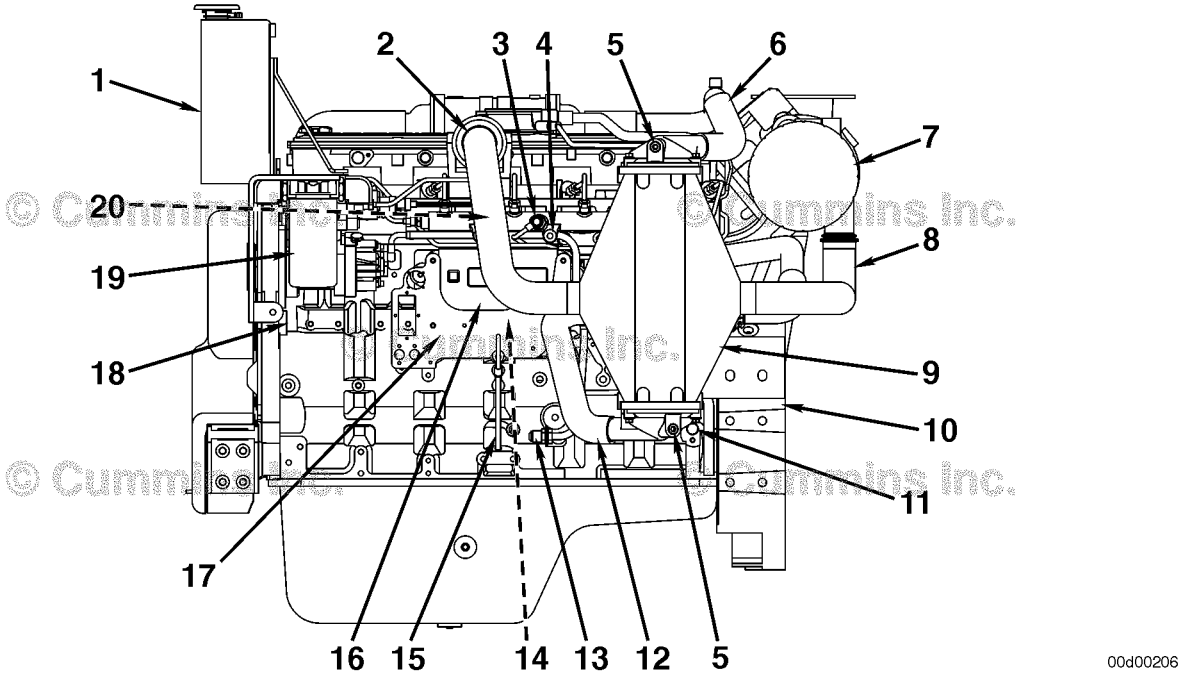

Left View (Port) QSL9 Marine (Keel Cooled)

1 Expansion tank
2 Aftercooler air outlet
3 Intake manifold temperature sensor
4 Intake manifold pressure sensor
5 Zinc anode
6 Aftercooler coolant inlet
7 Air cleaner or filter
8 Aftercooler air inlet
9 Aftercooler housing
10 Flywheel housing
11 Crankshaft speed sensor
12 Aftercooler coolant outlet
13 Fuel inlet from fuel tank
14 Fuel lift pump (behind ECM)
15 Engine oil dipstick
16 SIM module (mounted on ECM bracket)
17 Electronic control module (ECM)
18 Camshaft position sensor
19 Fuel filter
20 Fuel rail pressure sensor (behind aftercooler air outlet).

To buy Cummins Parts and Service Manuals, Training Guides, or Tools go to our website at https://store.cummins.com

Engine Diagrams

Engine Views

Marine Applications

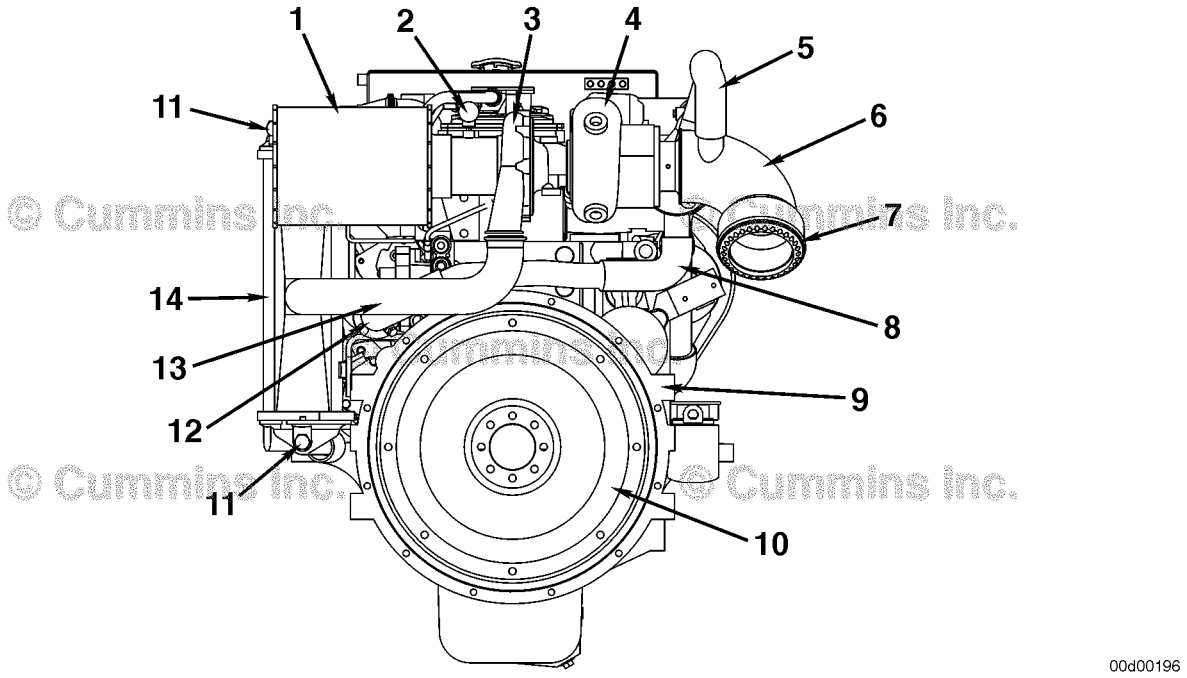

Rear View QSL9 Marine (Sea Water Cooled)

1 Air cleaner and filter
2 Air cleaner restriction indicator
3 Turbocharger compressor side
4 Turbocharger turbine side
5 Sea water from heat exchanger to exhaust elbow
6 Water cooled exhaust elbow
7 Sea water discharge
8 Sea water to heat exchanger
9 Flywheel housing
10 Flywheel
11 Aftercooler zinc anode
12 Marine gear oil cooler
13 Aftercooler air inlet
14 Aftercooler.

To buy Cummins Parts and Service Manuals, Training Guides, or Tools go to our website at https://store.cummins.com

Engine Diagrams

Engine Views

Marine Applications

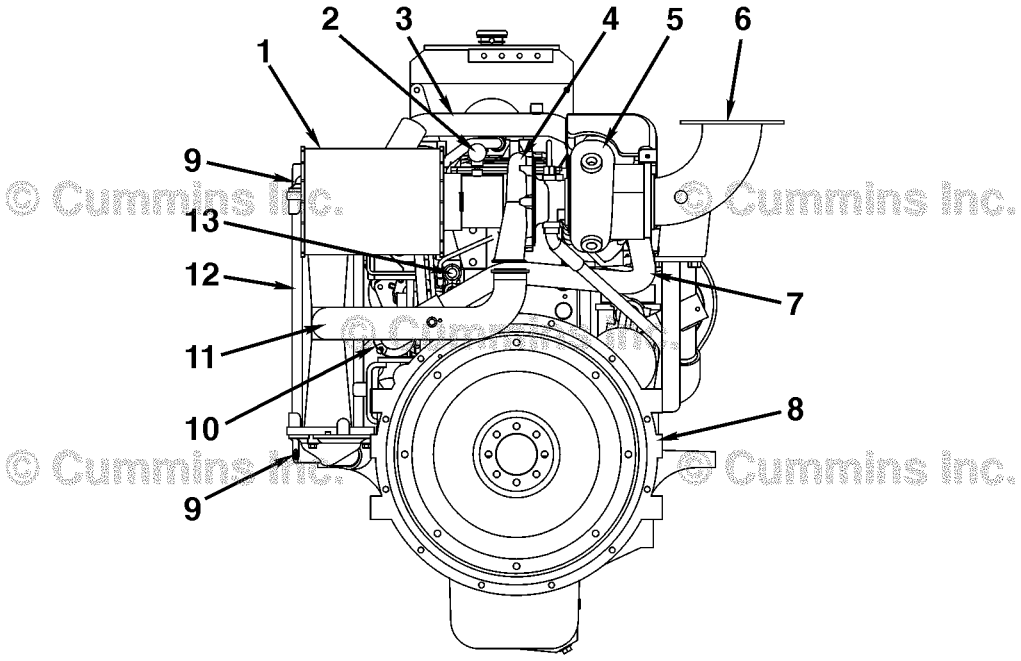

Rear View QSL9 Marine (Keel Cooled)

1 Air cleaner and filter
2 Air cleaner restriction indicator
3 Coolant outlet from thermostat housing to aftercooler
4 Turbocharger compressor side
5 Turbocharger turbine side
6 Exhaust elbow
7 Coolant return from marine gear oil cooler to water pump
8 Flywheel housing
9 Zinc anode
10 Marine gear oil cooler
11 Aftercooler air inlet
12 Aftercooler
13 Fuel return to fuel tank.

To buy Cummins Parts and Service Manuals, Training Guides, or Tools go to our website at https://store.cummins.com

Engine Diagrams

Engine Views

Marine Applications

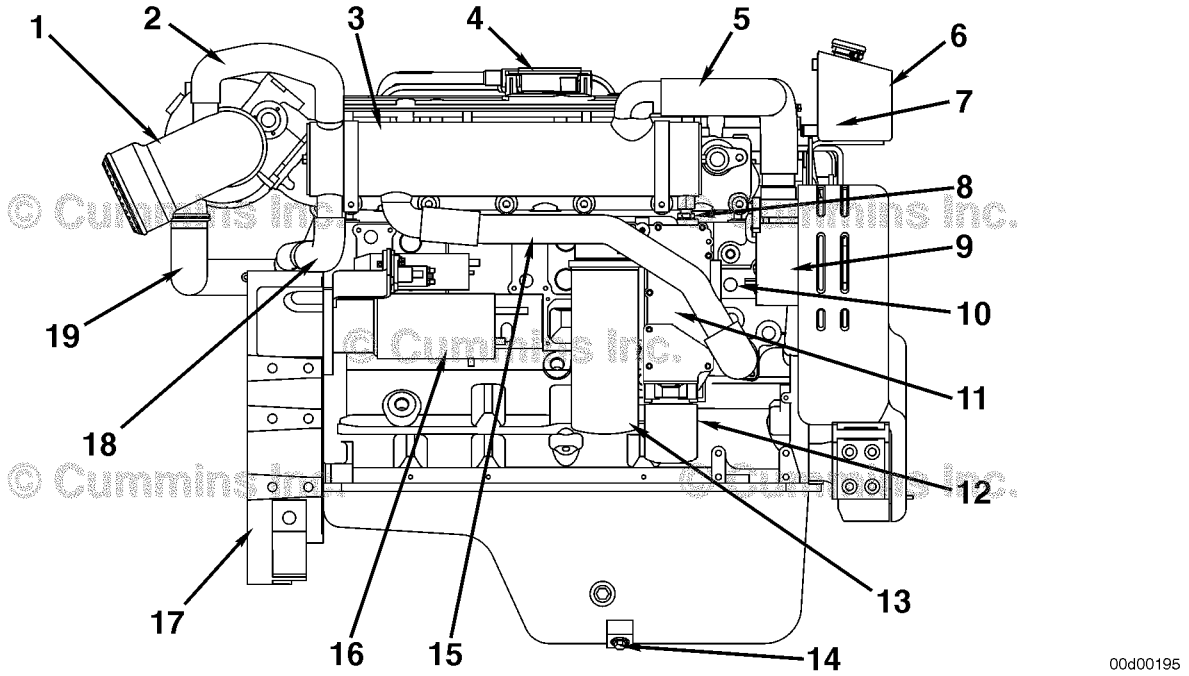

Right View (Starboard) QSL9 Marine (Sea Water Cooled)

1 Water cooled exhaust elbow
2 Sea water from heat exchanger to exhaust elbow
3 Heat exchanger
4 Crankcase breather
5 Heat exchanger coolant inlet
6 Expansion tank
7 Coolant level sensor
8 Zinc anode
9 Alternator
10 Coolant temperature sensor
11 Lubricating oil cooler
12 Coolant filter
13 Lubricating oil filter
14 Oil pan drain plug
15 Heat exchanger coolant outlet
16 Starter motor
17 Flywheel housing
18 Heat exchanger sea water inlet
19 Intake air from turbocharger to aftercooler.

To buy Cummins Parts and Service Manuals, Training Guides, or Tools go to our website at https://store.cummins.com

Engine Diagrams

Engine Views

Marine Applications

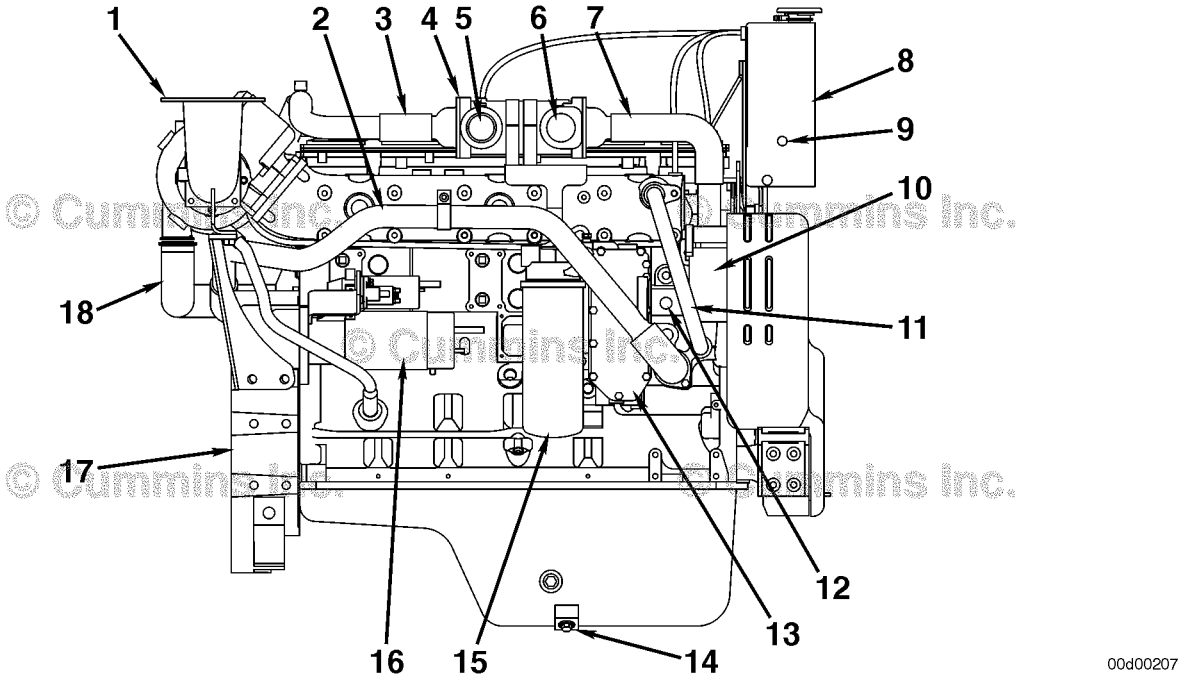

Right View (Starboard) QSL9 Marine (Keel Cooled)

1 Exhaust elbow
2 Coolant return from marine gear oil cooler to water pump
3 Coolant outlet from thermostat housing to aftercooler
4 Keel cooler thermostat housing
5 Coolant from keel cooler to engine
6 Coolant from engine to keel cooler
7 Coolant return from engine to keel cooler thermostat housing
8 Expansion tank
9 Coolant level sensor
10 Alternator
11 Coolant return from exhaust manifold to water pump
12 Coolant temperature sensor
13 Lubricating oil cooler
14 Oil pan drain plug
15 Lubricating oil filter
16 Starter motor
17 Flywheel housing
18 Intake air from turbocharger to aftercooler.

To buy Cummins Parts and Service Manuals, Training Guides, or Tools go to our website at https://store.cummins.com

Engine Diagrams

Engine Views

Marine Applications

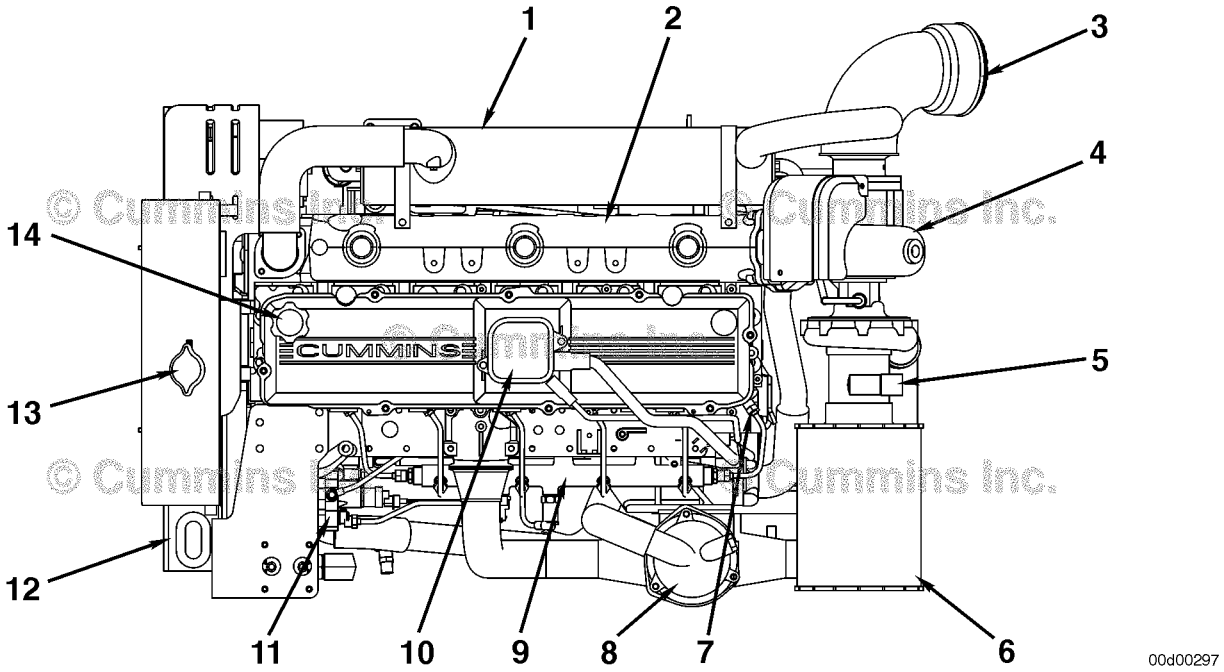

Top View QSL9 Marine (Sea Water Cooled)

1 Heat exchanger
2 Exhaust manifold
3 Exhaust outlet
4 Turbocharger
5 Air inlet restriction indicator
6 Air filter
7 High-pressure injector supply line
8 Aftercooler
9 Fuel rail
10 Crankcase breather
11 Fuel pump
12 Front engine mount
13 Expansion tank coolant fill cap
14 Oil fill cap.

To buy Cummins Parts and Service Manuals, Training Guides, or Tools go to our website at https://store.cummins.com

Engine Diagrams

Engine Views

Marine Applications

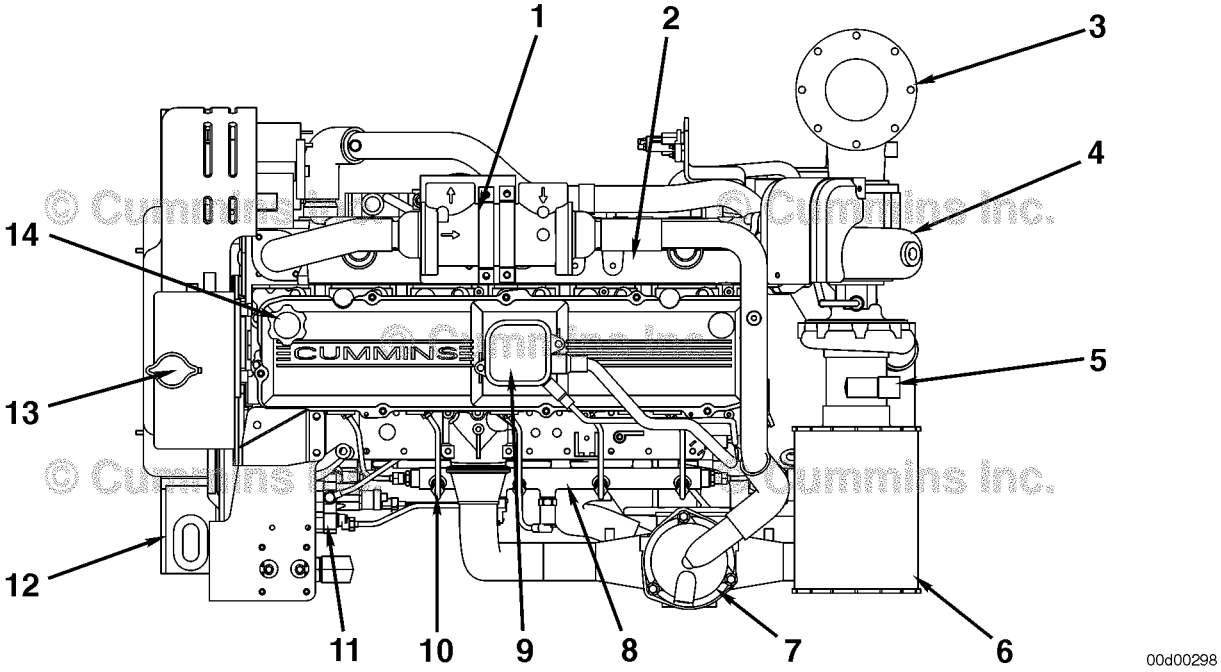

Top View QSL9 Marine (Keel Cooled)

1 Thermostat housing (keel cooled)
2 Exhaust manifold
3 Exhaust outlet
4 Turbocharger
5 Air inlet restriction indicator
6 Air filter
7 Aftercooler
8 Fuel rail
9 Crankcase breather
10 High pressure injector supply line
11 Fuel pump
12 Front engine mount
13 Expansion tank coolant fill cap
14 Oil fill cap.

To buy Cummins Parts and Service Manuals, Training Guides, or Tools go to our website at https://store.cummins.com

Engine Diagrams

Engine Views

Marine Applications

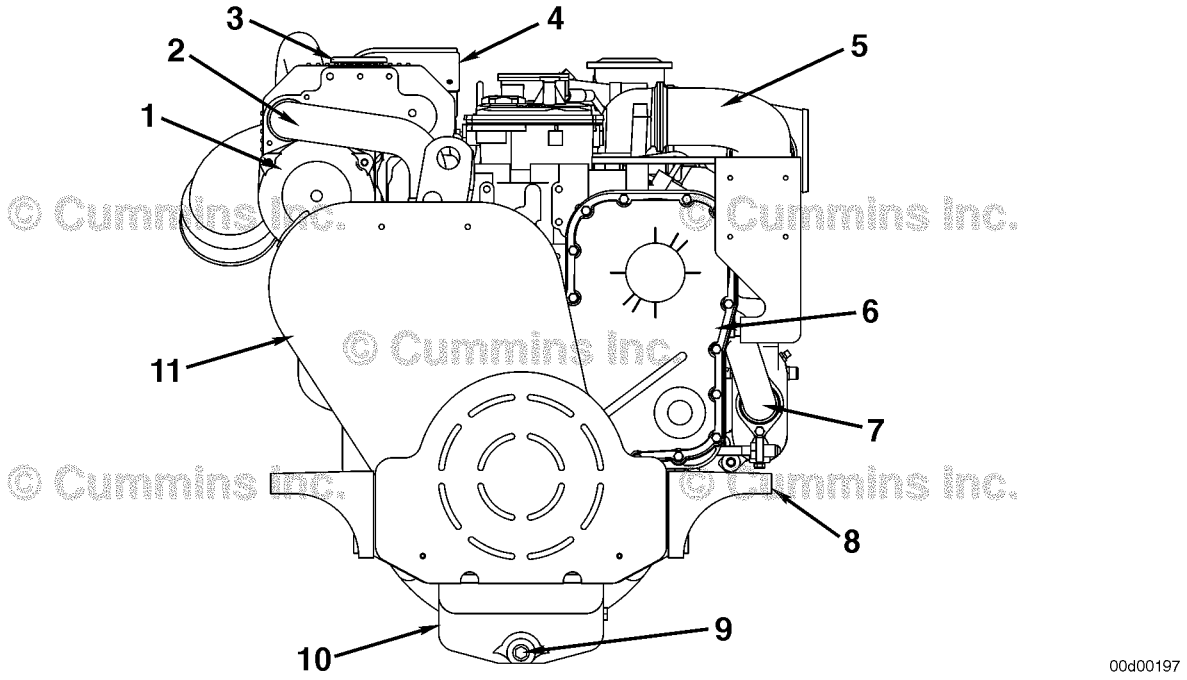

Front View QSC8.3 Marine (Sea Water Cooled)

1 Heat exchanger
2 Engine coolant to heat exchanger
3 Coolant fill cap
4 Expansion tank
5 Intake air inlet from aftercooler
6 Timing case cover
7 Sea water pump discharge
8 Engine mounting bracket
9 Oil pan drain plug
10 Oil pan
11 Belt and pulley guard.

To buy Cummins Parts and Service Manuals, Training Guides, or Tools go to our website at https://store.cummins.com

Engine Diagrams

Engine Views

Marine Applications

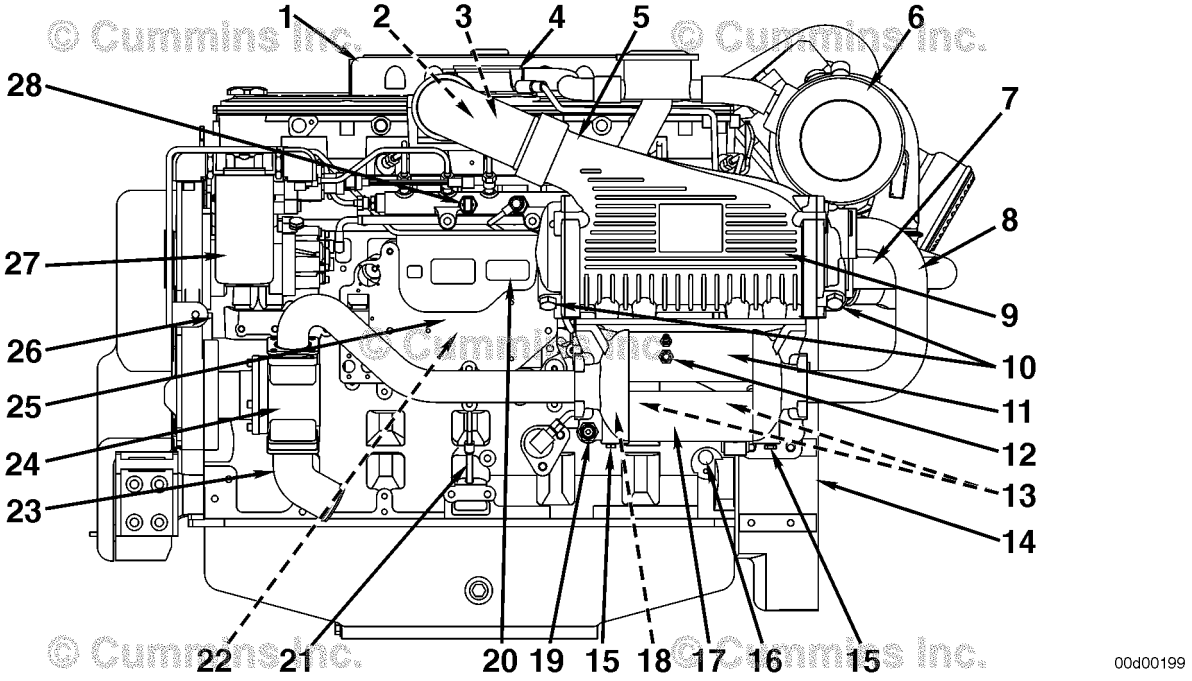

Left View (Port) QSC8.3 Marine (Sea Water Cooled)

1 Expansion tank
2 Intake manifold temperature sensor (behind aftercooler air outlet)
3 Intake manifold pressure sensor (behind aftercooler air outlet
4 Crankcase breather
5 Aftercooler air outlet
6 Air cleaner or filter
7 Aftercooler sea water outlet
8 Aftercooler sea water inlet
9 Aftercooler housing
10 Zinc anodes
11 Fuel cooler
12 Fuel outlet to fuel tank
13 Marine gear oil cooler connection (behind gear oil cooler x 2)
14 Flywheel housing
15 Zinc anode
16 Crankshaft speed sensor
17 Marine gear oil cooler
18 Oil pressure sensor (behind marine gear oil cooler)
19 Fuel inlet from fuel tank
20 Electronic control module (ECM)
21 Lubricating oil dipstick
22 Fuel lift pump (behind ECM)
23 Sea water inlet

To buy Cummins Parts and Service Manuals, Training Guides, or Tools go to our website at https://store.cummins.com

24 Sea water pump
25 SIM module (mounted on ECM bracket)
26 Camshaft position sensor
27 Fuel filter
28 Fuel rail pressure sensor.

To buy Cummins Parts and Service Manuals, Training Guides, or Tools go to our website at https://store.cummins.com

Engine Diagrams

Engine Views

Marine Applications

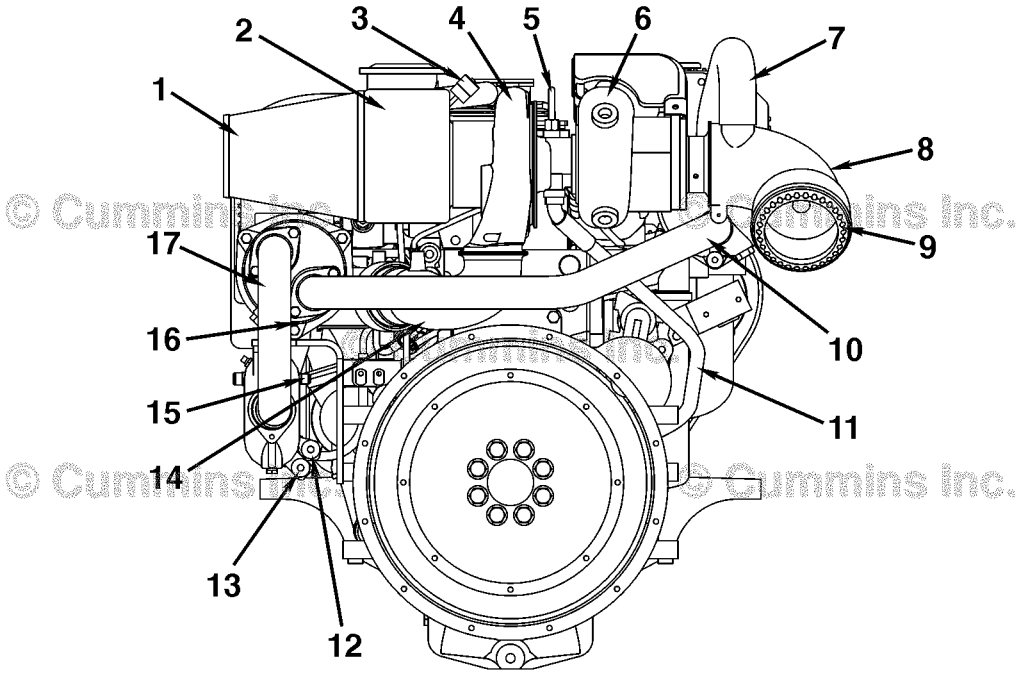

Rear View QSC8.3 Marine (Sea Water Cooled)

1 Air cleaner or filter
2 Closed crankcase ventilation canister/filter
3 Intake air restriction indicator
4 Turbocharger compressor side
5 Turbocharger oil supply
6 Turbocharger exhaust side
7 Heat exchanger sea water outlet
8 Sea water cooled exhaust elbow
9 Sea water discharge
10 Heat exchanger sea water inlet
11 Turbocharger oil drain tube
12 Marine gear oil cooler connection
13 Marine gear oil cooler connection
14 Aftercooler air inlet
15 Fuel cooler inlet from engine
16 Aftercooler drain valve
17 Aftercooler sea water inlet.

To buy Cummins Parts and Service Manuals, Training Guides, or Tools go to our website at https://store.cummins.com

Engine Diagrams

Engine Views

Marine Applications

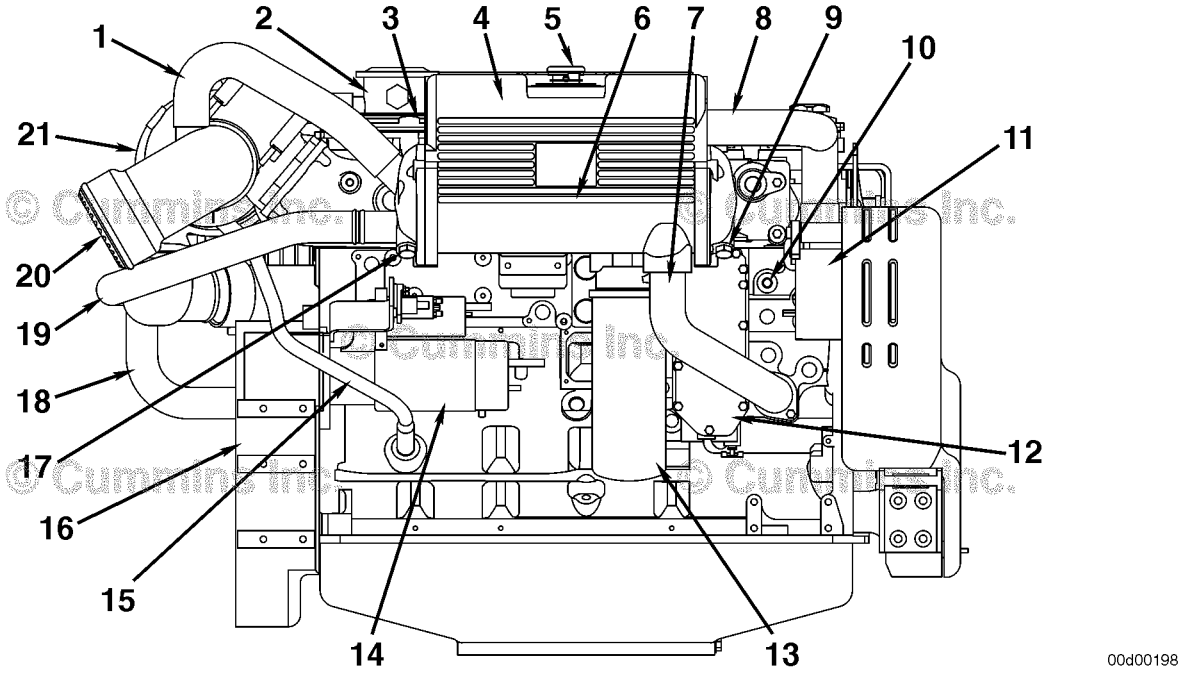

Right View (Starboard) QSC8.3 Marine (Sea Water Cooled)

1 Sea water outlet from heat exchanger
2 Vacuum regulator for air filter
3 Coolant level sensor
4 Expansion tank
5 Coolant fill cap
6 Heat exchanger
7 Coolant outlet from heat exchanger
8 Coolant inlet to heat exchanger
9 Zinc anode
10 Coolant temperature sensor
11 Alternator
12 Lubricating oil cooler
13 Lubricating oil filter
14 Starter motor
15 Turbocharger oil drain
16 Flywheel housing
17 Zinc anode
18 Sea water inlet to aftercooler
19 Sea water inlet to heat exchanger
20 Exhaust elbow/sea water discharge
21 Turbocharger.

To buy Cummins Parts and Service Manuals, Training Guides, or Tools go to our website at https://store.cummins.com

Engine Diagrams

Engine Views

Marine Applications

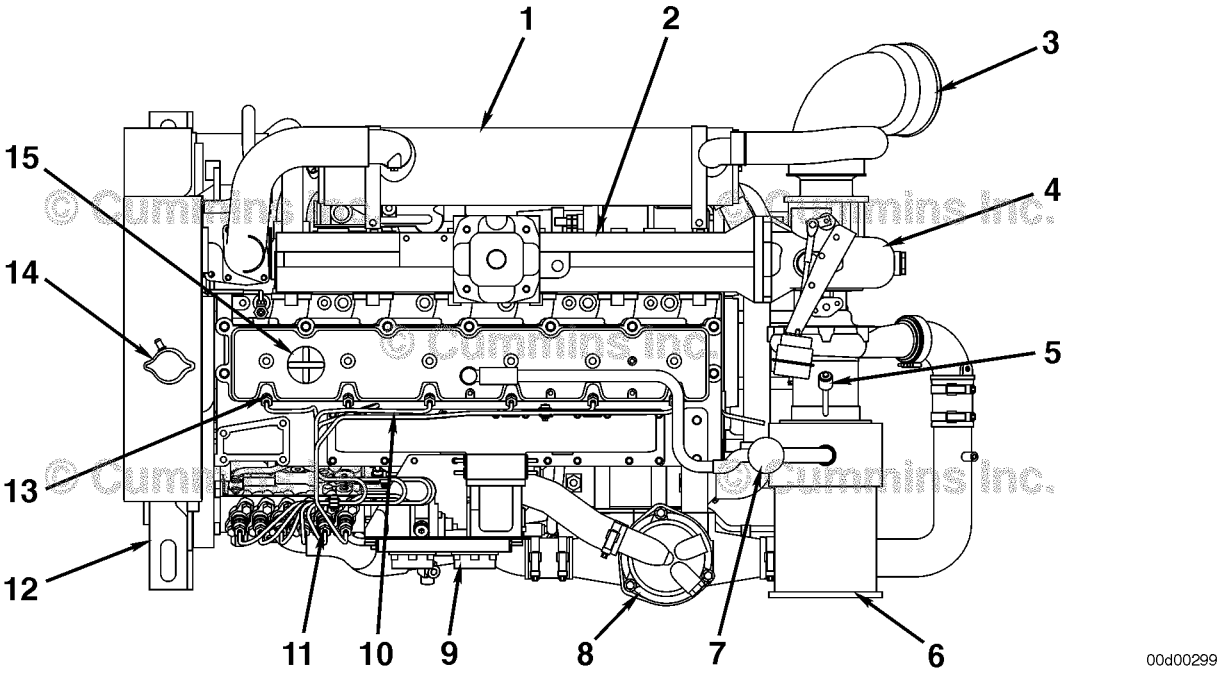

Top View QSC8.3 Marine (Sea Water Cooled)

1 Heat exchanger
2 Exhaust manifold
3 Exhaust outlet
4 Turbocharger
5 Air inlet restriction indicator
6 Air filter
7 Crankcase breather
8 Aftercooler
9 Electronic control module (ECM)
10 High pressure injector supply line
11 Fuel pump
12 Front engine mount
13 Injector
14 Expansion tank coolant fill cap
15 Oil fill cap.

To buy Cummins Parts and Service Manuals, Training Guides, or Tools go to our website at https://store.cummins.com

Cummins® Service Engine Model Product Identification

General Information

The Cummins® Service Engine Model Nomenclature procedure describes how engines are identified within Cummins service organization. This method was introduced for models after and including manufacture year 2007.

Electronic engines are identified by the first two letters, either an "IS" for On-Highway automotive or "QS" for Off-Highway industrial market applications.

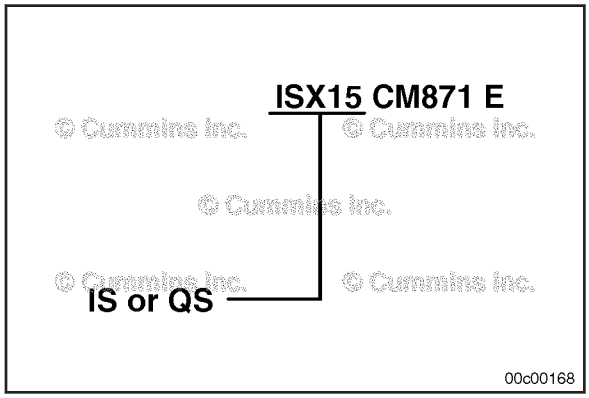

The third letter is the engine platform designation followed by the engine liter size.

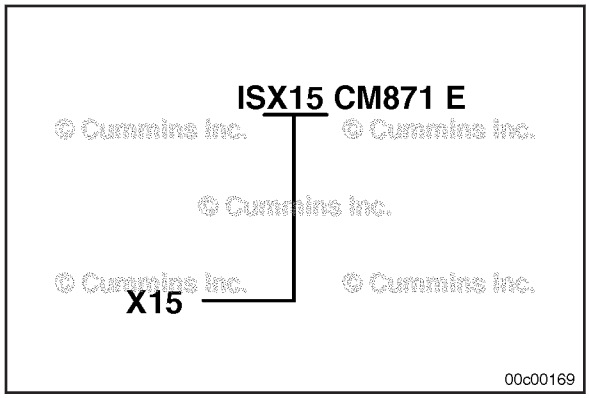

If the engine operates on a fuel type other than diesel, the type will be identified after the liter size.

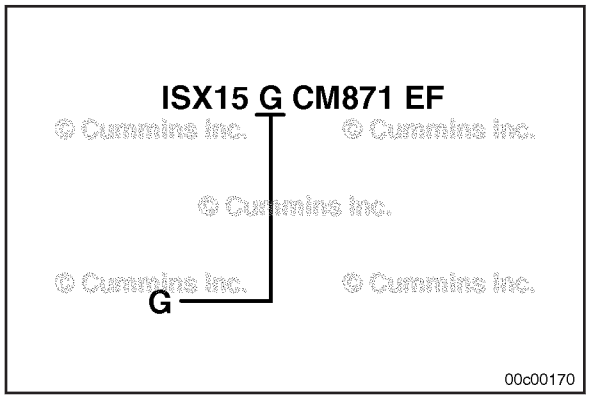

To buy Cummins Parts and Service Manuals, Training Guides, or Tools go to our website at https://store.cummins.com

The control system is identified with the letters "CM" followed by the control system model number.

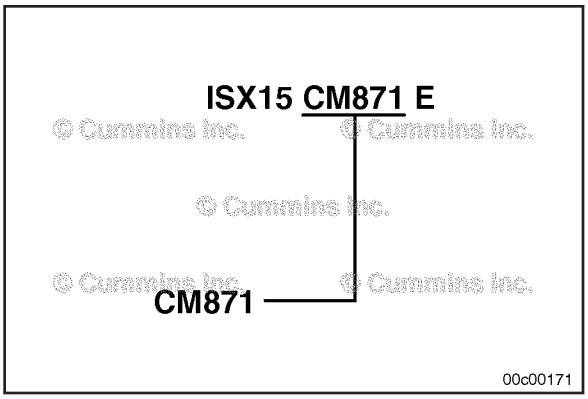

The technology identifier after the control system designates the prevailing technology used with the engine. (See table in this procedure for letter designations.)

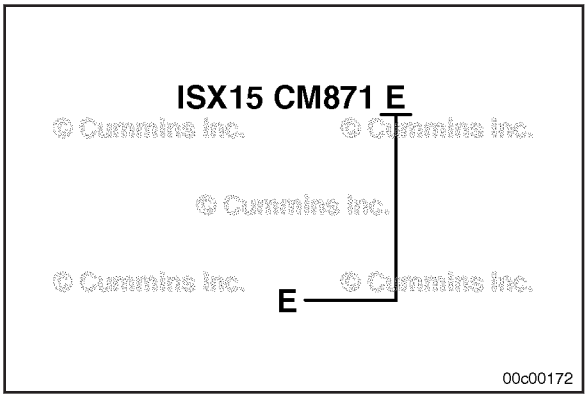

Example:

1 On-Highway automotive "X" 15 liter engine
2 Control system number 871
3 Technology supported; Electric EGR and Diesel Particulate Filter

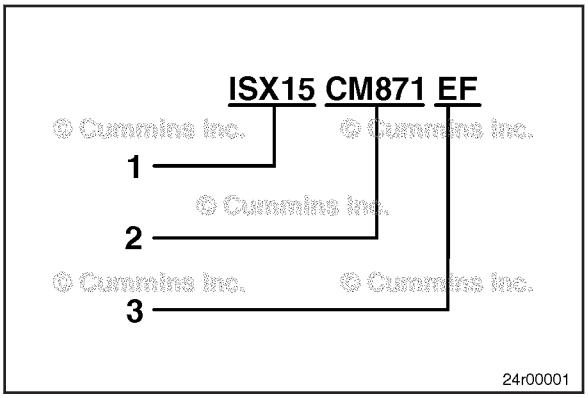

To buy Cummins Parts and Service Manuals, Training Guides, or Tools go to our website at https://store.cummins.com

Technology	Name	Suffix
Exhaust Gas Recirculation	Not used	None
	Pneumatic	P
	Electric	E
Diesel Particulate Filter (DPF)	Not used	None
	Full Flow DPF	F
	Partial Flow DPF	F2
Diesel Oxidation Catalyst	Not used	None
	DOC	C
3-Way Oxidation Catalytic Converter	Not used	None
	3-Way Catalyst	J
Selective Catalytic Reduction System	Not used	None
	Air Driven	S
	Airless	A
Nox Sensor	Not used	None
	Nox Sensor	N
Modular Common Rail System	Used only on QSK19, 38, 50 , 60 HHP Engines	MCRS
Integrated Dosing Control Unit	Not Used	None
	Integrated	I
Urea Quality Sensor	Not Used	None
	UQS	Q

To buy Cummins Parts and Service Manuals, Training Guides, or Tools go to our website at https://store.cummins.com

Section 1 - Operating Instructions

Section Contents

Page
Cold Weather Starting 1-4
General Information 1-4
Using Starting Aids 1-4
Control Head Operation 1-10
Backup Throttle 1-12
Gauges 1-10
Instrument Panel 1-10
Programmable Features 1-12
Electromagnetic Interference (EMI) 1-18
General Information 1-18
System EMI Radiation Levels 1-18
System EMI Susceptibility 1-18
Electronic Controlled Fuel System 1-17
Diagnostic Fault Codes 1-18
Theory of Operation 1-17
Engine Operating Range 1-6
General Information 1-6
Engine Shutdown 1-9
General Information 1-9
General Operating Instructions 1-7
General Information 1-7
Normal Starting Procedure 1-2
General Information 1-2
Operating Instructions - Overview 1-1
General Information 1-1
Operating the Engine 1-5
Ambient Temperature 1-5
Normal 1-5
Starting Procedure After Extended Shutdown or Oil Change 1-5
General Information 1-5

To buy Cummins Parts and Service Manuals, Training Guides, or Tools go to our website at https://store.cummins.com

This Page Left Intentionally Blank

Operating Instructions - Overview

General Information

Correct care of your engine will result in longer life, better performance, and more economical operation.

Follow the daily maintenance checks listed in Maintenance Guidelines (Section 2).

The new Cummins® engine associated with this manual does **not** require a "break-in" procedure. This section of the manual provides all of the necessary information required for proper engine operation.

U.S. legislation requires that stationary compression ignition internal combustion engines designated for emergency use are limited to emergency operations and required maintenance and testing.

Check the oil pressure indicators, temperature indicators, warning lights, and other gauges daily to make sure they are operational.

Check the oil pressure, coolant temperature, and other engine parameters daily via the OEM front panel to make sure they are operational. Check the panel regularly for any alarm messages. Take appropriate action to rectify the alarm condition or contact your nearest Authorized Cummins® Distributor.

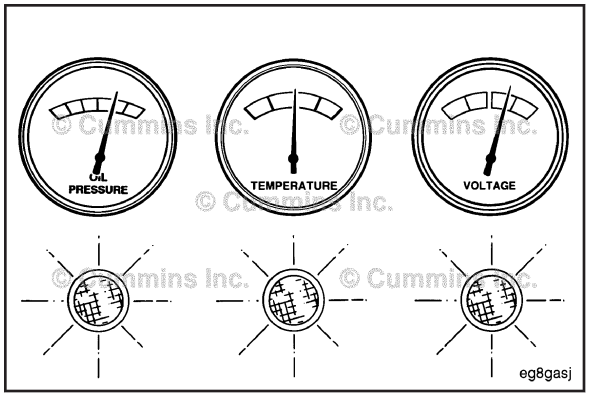

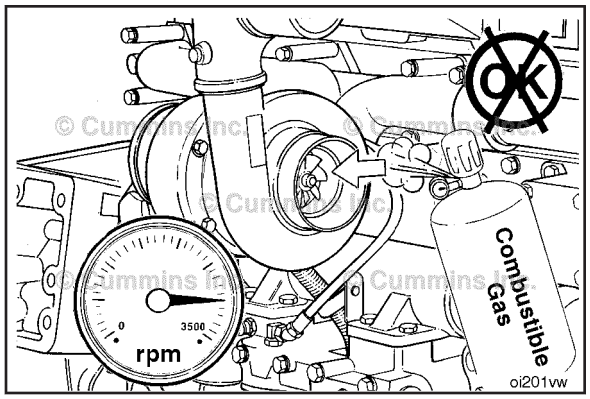

⚠WARNING⚠
Do not operate a diesel engine where there are or can BE COMBUSTIBLE vapors. These vapors can be sucked through the air intake system and cause engine acceleration and over speeding that can result in a fire, an explosion, and extensive property damage. Numerous safety devices are available, such as air intake shutoff devices, to minimize the risk of over speeding where an engine, due to its application, is operating in a combustible environment, such as due to a fuel spill or gas leak. Remember, Cummins Inc. has no way of knowing the use you have for your engine. The equipment owner and operator ARE responsible for safe operation in a hostile environment. Consult A Cummins® Authorized Repair Location for further information.

△CAUTION△
Do not expose the engine to corrosive chemicals. Corrosive chemicals can damage the engine.

Cummins recommends the installation of an air intake shutoff device or a similar safety device to minimize the risk of overspeeding when an engine is operating in a combustible environment, such as due to a fuel spill or gas leak.

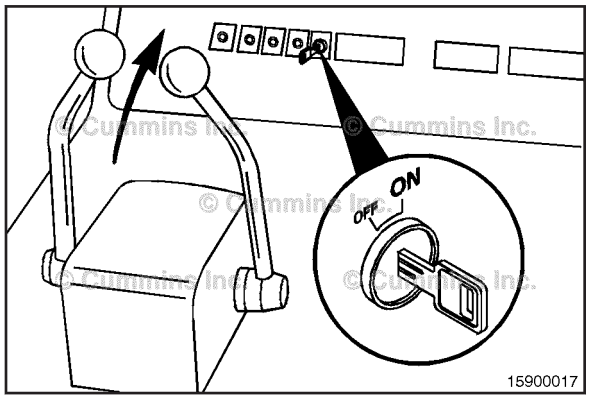

Normal Starting Procedure

General Information

△CAUTION△
To reduce the possibility of damage to the starting motor, do not engage the starting motor for more than 30 seconds. Wait 2 minutes between each attempt to start (electrical starting motors only).

NOTE: There is a separate keyswitch wired to the primary panel. It will be installed in the helm at the boat manufacturer's or installer's desired location. The keyswitch **must** be in the ON or RUN position to crank-start the engine.

Disengage the drive unit.

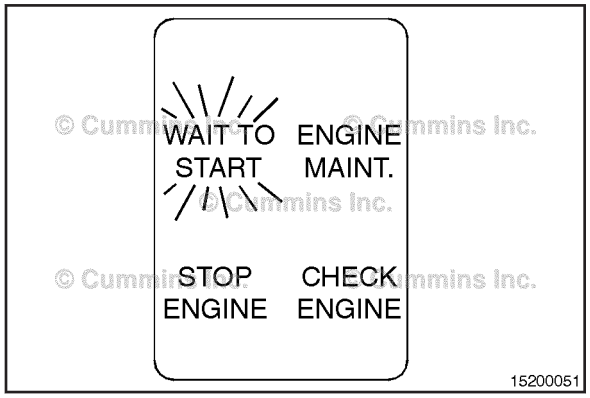

Turn the key switch to the ON or RUN position. When the key is in this position, the WAIT TO START lamp will be illuminated for a maximum of 20 seconds. The engine should **not** be cranked until the WAIT TO START lamp shuts off.

NOTE: The controller is reset each time the ignition is turned off and the cycle will start over.

To buy Cummins Parts and Service Manuals, Training Guides, or Tools go to our website at https://store.cummins.com

When the WAIT TO START lamp goes out, the preheat cycle is complete.

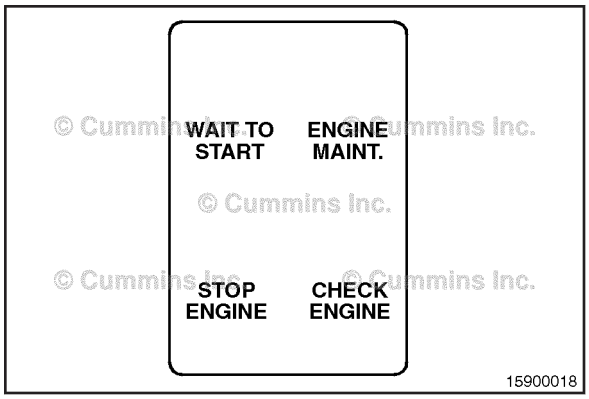

Start the engine with the throttle in the IDLE position.

This black push button (5) is used to engage the starter motor.

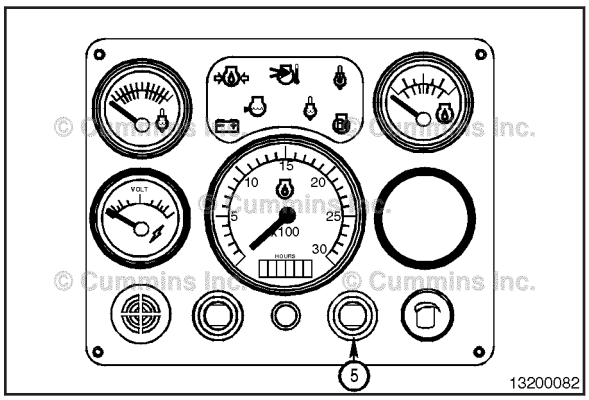

⚠CAUTION⚠

The engine must have adequate oil pressure within 15 seconds after starting. If the WARNING lamp indicating low oil pressure has not gone out or there is no oil pressure indicated on a gauge within 15 seconds, shut off the engine immediately to avoid engine damage. The low oil pressure troubleshooting procedure is located in Troubleshooting Symptoms (Section TS).

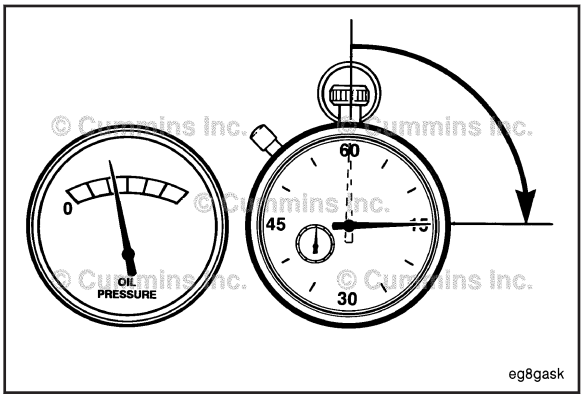

Idle the engine 3 to 5 minutes before operating with a load.

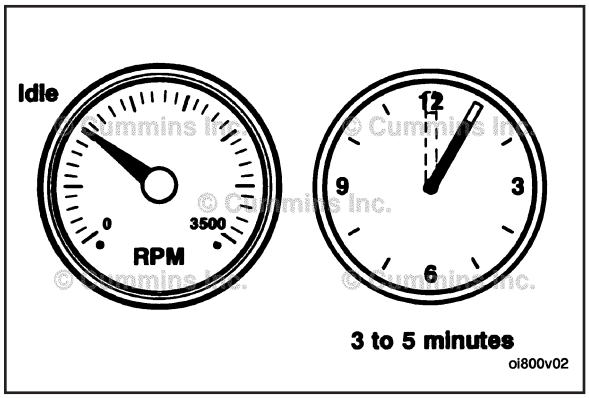

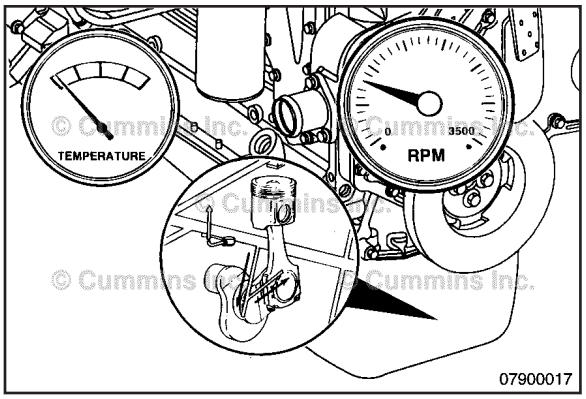

After starting a cold engine, increase the engine speed (rpm) slowly to provide adequate lubrication to the bearings and to allow the oil pressure to stabilize.

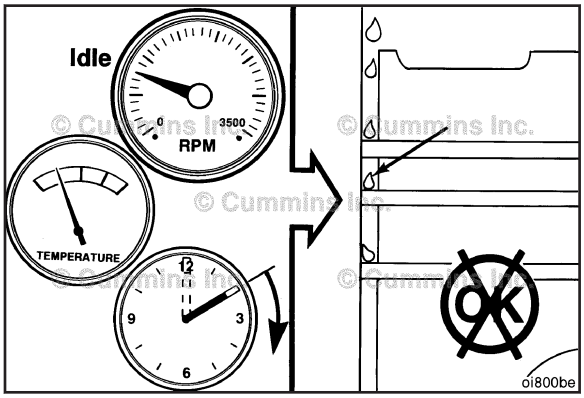

⚠CAUTION⚠
Do not operate engine at low idle for long periods with engine coolant temperature below the minimum specification in Maintenance Specifications in this manual. This can result in the following:

- Fuel Dilution of the lubricating oil
- Carbon build up in the cylinder
- Cylinder head valve sticking
- Reduced performance.

Cold Weather Starting

General Information

Follow the Normal Starting Procedure in this section.

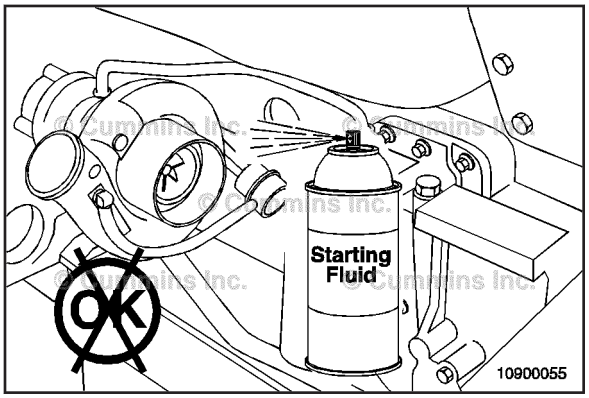

Using Starting Aids

⚠WARNING⚠
Do not use starting fluids with this engine. Use of starting fluid can cause an explosion, fire, personal injury, severe damage to the engine, and property damage.

The **only** recommended cold weather starting aids for marine applications are engine coolant preheaters and oil pan immersion heaters.

Cold weather starting aids are available for this engine. Contact a Cummins® Authorized Repair Location for more information.

To buy Cummins Parts and Service Manuals, Training Guides, or Tools go to our website at https://store.cummins.com

Starting Procedure After Extended Shutdown or Oil Change

General Information

Follow the Normal Starting Procedure in this section. The engine will **not** start until the minimum cranking oil pressure is detected by the ECM. It can take more cranking time to start the engine after an extended shut down or oil change.

Operating the Engine

Normal

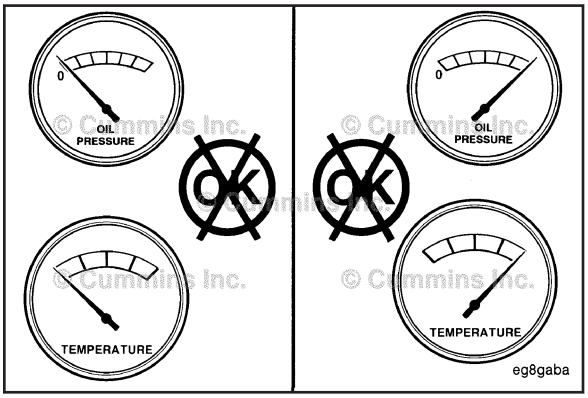

If equipped, monitor the oil pressure and coolant temperature gauges frequently. Refer to Lubricating Oil System specifications and Cooling System specifications, in Maintenance Specifications (Section V) for recommended operating pressures and temperatures. Shut off the engine if any pressure or temperature does **not** meet the specifications.

Continuous operation with engine coolant temperature above or below the engine coolant temperature specifications listed in Maintenance Specifications (Section V) can damage the engine.

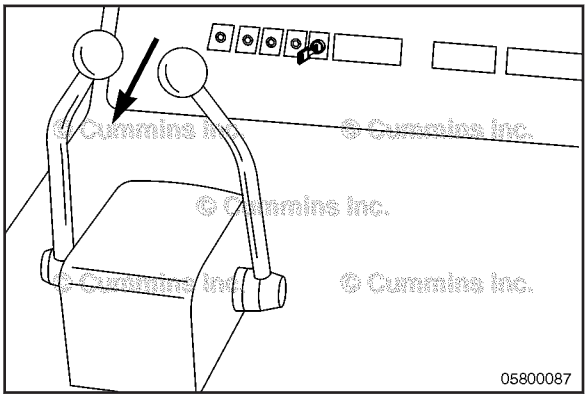

If an overheating condition starts to occur, reduce the power output of the engine by reducing the throttle setting until the temperature returns to normal operating range. If the engine temperature does **not** return to normal, further reduce the engine speed and contact a Cummins® Authorized Repair Location.

Ambient Temperature

0 to -32°C [32 to -25°F]

Use 50-percent glycol antifreeze and 50-percent water for the engine coolant mixture.

-32 to -54°C [-25 to -65°F]

Use 60-percent glycol antifreeze and 40-percent water for the engine coolant mixture.

The cold weather operating aid is required for cold weather situations.

To buy Cummins Parts and Service Manuals, Training Guides, or Tools go to our website at https://store.cummins.com

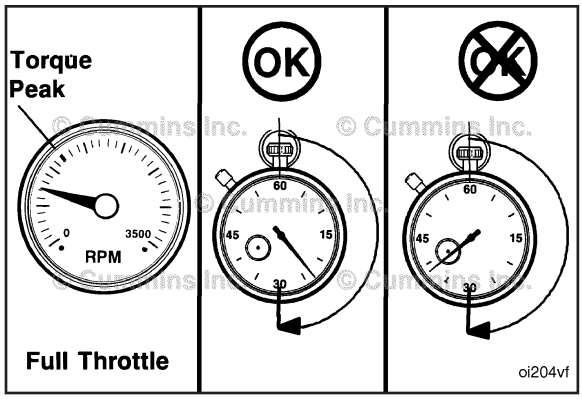

Engine Operating Range

General Information

⚠CAUTION⚠
Do not operate the engine at full throttle below peak torque rpm (refer to engine dataplate for peak torque rpm) for more than 30 seconds. Operating the engine at full throttle below peak torque will shorten engine life to overhaul, can cause serious engine damage, and is considered engine abuse.

⚠CAUTION⚠
Do not operate the engine beyond the maximum engine speed. Operating the engine beyond the maximum engine speed can cause severe engine damage. Use proper operating techniques for the vehicle, vessel, or equipment to prevent engine overspeed. The maximum engine speed specification is listed in Maintenance Specifications (Section V).

Cummins® engines are designed to operate successfully at full throttle under transient conditions down to peak torque engine speed. This is consistent with recommended operating practices.

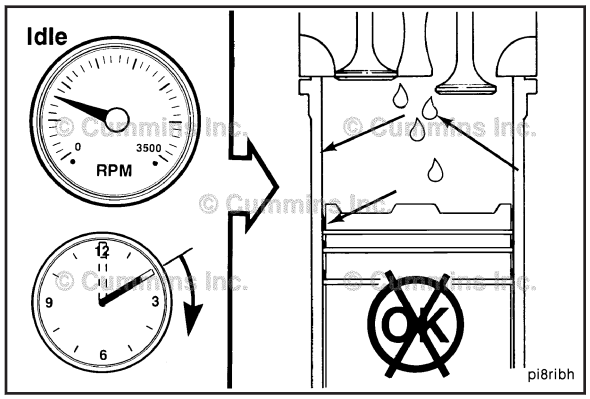

⚠CAUTION⚠
Do not idle the engine for excessively long periods. Long periods of idling, more than 10 minutes, can cause poor engine performance.

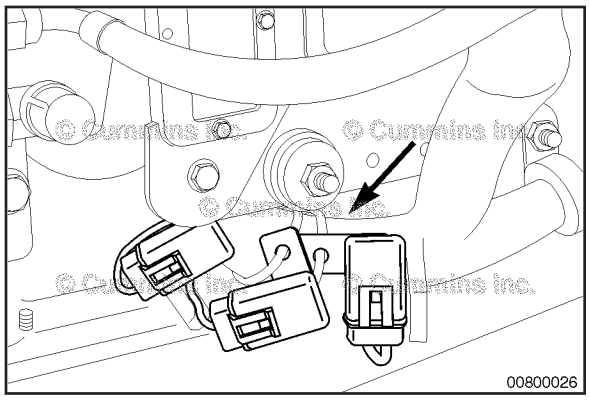

The engine is equipped with three spade type fuses that are located below and behind the engine ECM.

- 25 AMP for ECM Unswitched Power Supply
- 15 AMP for SIM Unswitched Power Supply
- 5 AMP for Electronic Service Tool Connection Power Supply.

To buy Cummins Parts and Service Manuals, Training Guides, or Tools go to our website at https://store.cummins.com

The optional OEM wiring connection that is supplied by the factory has one spade type fuse (1).

- 10 AMP for OEM Wiring Harness Instrumentation Power Supply (optional, if equipped).

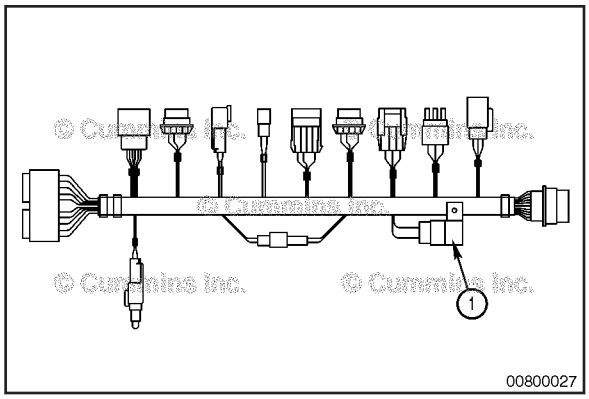

General Operating Instructions

General Information

Cummins® engines are designed to operate at or below the maximum cruise speed for extended periods of time with intervals of operation above maximum cruise speed allowed depending on the rating. The engine **must**be operated in accordance with the rating. Exceeding the operational parameters of the rating will jeopardize engine reliability and durability.

Rating	Allowable Operation Time Above Maximum Cruise Speed
Continuous Duty (CD)	Unlimited
Heavy Duty (HD)	8 out of 10 hours
Medium Continuous Duty (MD)	6 out of 12 hours
Intermittent Duty (ID)	2 out of 8 hours
Government Service (GS)	1 out of 8 hours
High Output (HO)	1 out of 8 hours

The maximum cruise speed for High Output (HO), GS, and ID ratings is dependent on the rated speed of the engine.

The maximum cruise rpm for MD and HD ratings is 200 rpm less than the rated speed of the engine.

The maximum cruise speed of the CD rating is the same as the rated speed of the engine.

The rated speed for all engine rating can be found on the engine dataplate. See Section E for more information.

Maximum Cruise Speed (rpm) for HO, GS, and ID Ratings	
Rated Speed (rpm)	**Speed Reduction From Rated Speed (rpm)**
Less than 2800	200
2801 to 3500	300
3501 to 4500	400

To buy Cummins Parts and Service Manuals, Training Guides, or Tools go to our website at https://store.cummins.com

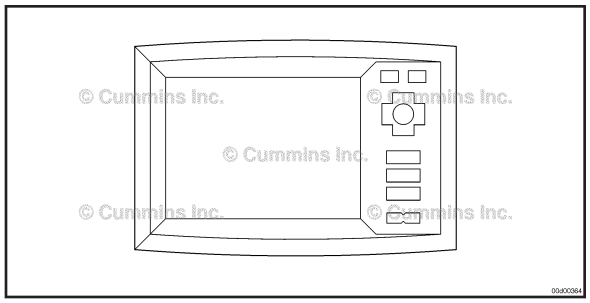

HO, GS, and ID ratings should **not** be operated for extended periods of time with the engine load exceeding 80 percent.

If the engine load exceeds 80 percent during operation at cruising speeds, then the speed of the engine should be reduced so that the engine load is less than or equal to 80 percent.

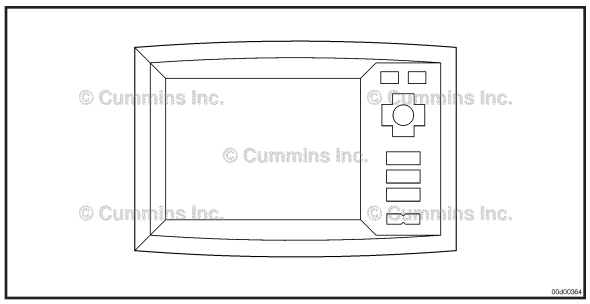

HO engine paired with water-jet propulsion can operate up to a 85 percent load at cruising speeds.

Engine speed and load can be viewed on the engine electronic display.

To buy Cummins Parts and Service Manuals, Training Guides, or Tools go to our website at https://store.cummins.com

Engine Shutdown

General Information

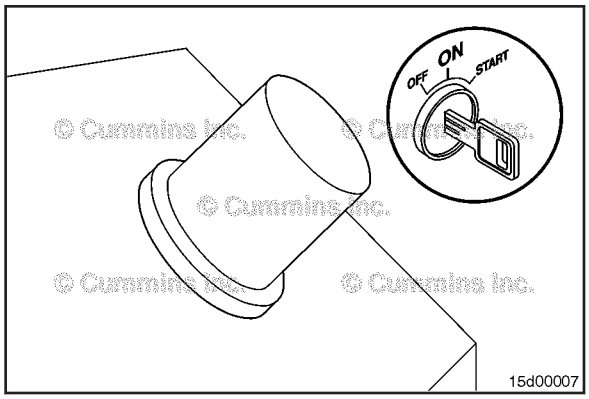

For engines with shielded exhaust manifold and turbochargers, allow the engine(s) to idle for 10 to 12 minutes before shutting off after full load operation.

Otherwise, allow the engine(s) to idle 3 to 5 minutes before shutting off after full load operation. This allows the cool down of pistons, cylinders, bearings and turbocharger components.

If the engine does **not** shut down, refer to Troubleshooting Symptom (Section TS) in appropriate Operation and Maintenance manual.

Turn the keyswitch to the OFF position.

Push the STOP button to stop the engine(s), or if equipped with a keyswitch **only**, turn the keyswitch to the OFF position.

NOTE: For engines equipped with an electronic control module (ECM) ensure the keyswitch is turned off for a minimum of 100 seconds prior to disconnecting the continuous (unswitched) battery power supply. If the unswitched battery power supply is disconnected in less than 100 seconds after the keyswitch is turned off active fault codes and incorrect ECM information can occur.

NOTE: The information below is written for engines equipped with an original equipment manufacturer (OEM) supplied control system. For engines equipped with the Cummins supplied controls system, refer to C Command Connect and Connect Premier Marine Panel System PS102 & PS103 Owners Manual, Bulletin 5411481, for additional information.

NOTE: Damage to the engine resulting from freezing is **not** covered under the Cummins® warranty.

Procedures **must** be followed to protect the engine from freeze damage during a cold weather storage period. The procedure applies anytime freezing conditions are present or could occur. Refer to Procedure 000-014 (Seasonal Storage) - in Section SS in appropriate Operation and Maintenance manual, for steps to protect the engine during these periods.

To buy Cummins Parts and Service Manuals, Training Guides, or Tools go to our website at https://store.cummins.com

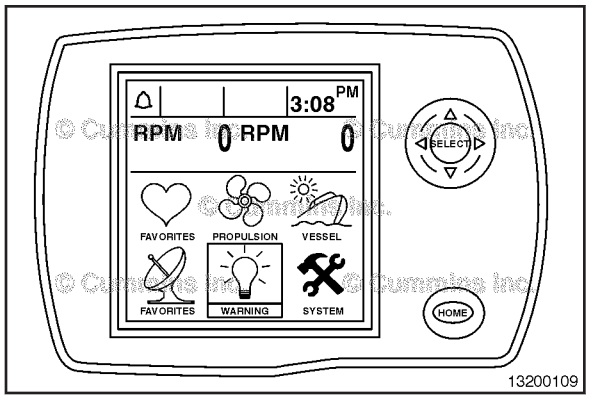

Control Head Operation

Instrument Panel

Electronic Governor Operation

NOTE: The information below is written for engines equipped with an original equipment manufacturer (OEM) supplied control system. For engines equipped with the Cummins supplied controls system, refer to C Command Connect and Connect Premier Marine Panel System PS102 & PS103 Owners Manual, Bulletin 5411481, for additional information.

Refer to the SmartCraft Diesel View Configuration and Operation Manual, Bulletin 4081893.

The following additional gauges can be added to the SmartCraft Diesel View configuration, if so equipped:

- Gear Oil Pressure
- Gear Oil Temperature
- Fuel Tank Level
- Fluid Level
- Fuel Flow Gauge.

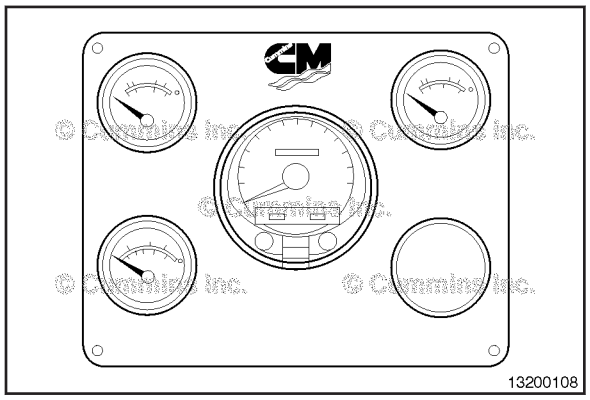

Gauges

All of the gauges used with the engine are electronically driven. The gauges receive the reading from a high-speed datalink that is connected to the different sensors.

Your vessel will possibly be equipped with standard gauges, Diesel View, or a combination of Diesel View with gauges. See the appropriate individual manual for additional information.

Some boat manufacturers can elect **not** to use the instrument panel; the gauges will be mounted directly in the vessel dash.

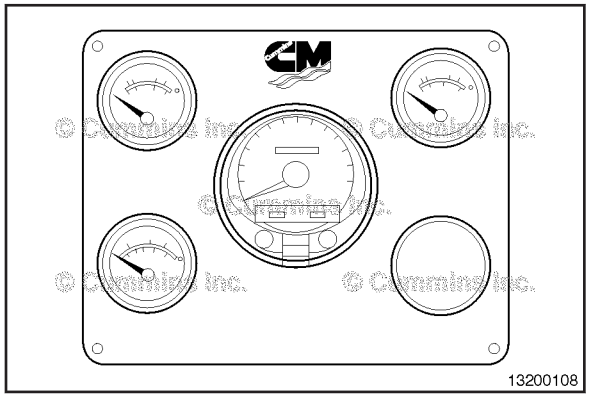

Oil Pressure Gauge

The oil pressure gauge shows the operating oil pressure of the engine.

Tachometer or Speedometer

If the vessel is equipped with an instrument panel, the panel is equipped with a tachometer and gauges **only**. The tachometer is required to drive the other gauges in the panel. The tachometer shows the engine's crankshaft speed in revolutions per minute (rpm).

The vessel can also be equipped with an optional speedometer. Some boat manufacturers use a Global Positioning Sensor (GPS) for vessel speed.

Refer to the separate Operation Manual, Bulletin 4081961, for the correct setup and operation of the tachometer and speedometer.

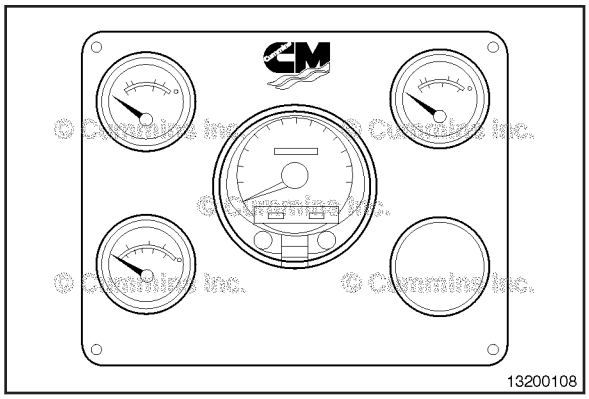

Voltmeter

The voltmeter shows the battery voltage.

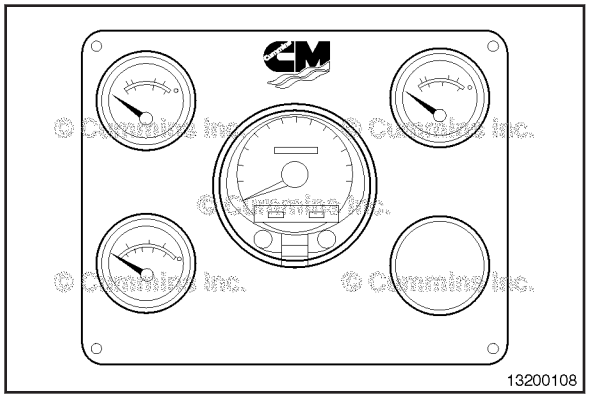

Coolant Temperature Gauge

The coolant temperature gauge shows the temperature of the engine coolant during operation.

The last opening can be plugged or used for additional gauges that the boat manufacturer would require.

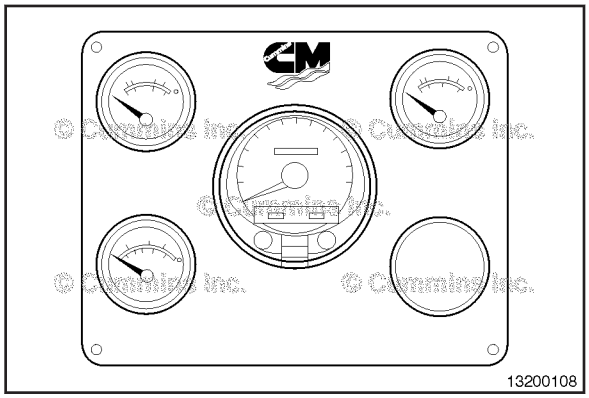

To buy Cummins Parts and Service Manuals, Training Guides, or Tools go to our website at https://store.cummins.com

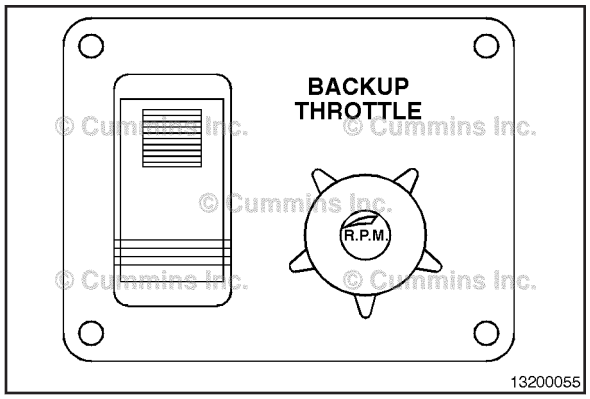

Backup Throttle

The optional backup throttle was designed to be used in the event of a main throttle failure.

Backup Throttle Usage

- Rotate the backup throttle knob **counterclockwise** to the idle position, or depress the knob to bring the engine to idle.
- Put the main throttle lever in the idle position.
- Move the backup throttle switch to the ON position.
- Rotate the throttle knob **clockwise** to desired engine speed.

NOTE: In the event of a main control failure of the gear shift, it is required that the gear be engaged manually.

The backup throttle switch has a safety latch feature; press the latch down and move the switch to the ON position. The throttle also has a friction adjustment collar. Rotate the collar **clockwise** to tighten, or **counterclockwise** to loosen, until the desired throttle tension is obtained.

To turn the backup throttle off and to regain control of the engine speed using the main throttle lever:

1. Set the backup throttle to idle
2. Set the main throttle to idle
3. Put the backup throttle switch in the OFF position by depressing the bottom of the rocker switch

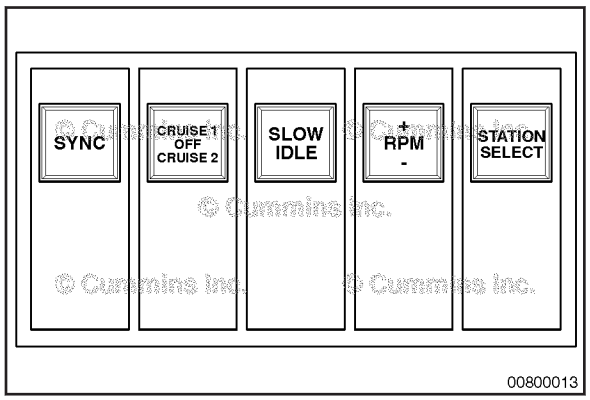

Programmable Features

⚠CAUTION⚠
Use Caution to avoid confusion of proper operation of C-Cruise functionality. The functionality of the C-Cruise features are designed such that there is no intended adverse interaction of the features due to unintended activation of C-Cruise switches. The system is designed such that no sudden acceleration or decelerations can be caused by switch activation.

The helm switches and Smart Multiplex Module are used to activate various features that are available on the engine(s). Those features include:

- Engine Synchronization
- Cruise 1/Cruise 2
- Slow Idle Mode
- Idle Increment/Idle Decrement (rpm +/rpm -)
- Active Station Select

In addition to the feature activation switches, the switch panel assembly contains feature activation indicators (lamps) to indicate when the function is enabled.

The C-Cruise switch configuration is for a dual engine and dual station application.

To buy Cummins Parts and Service Manuals, Training Guides, or Tools go to our website at https://store.cummins.com

The C-Cruise switch configuration is for a dual engine and single station application.

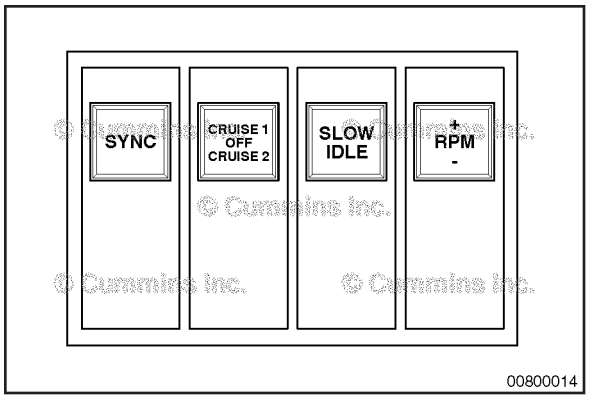

The C-Cruise switch configuration is for a single engine and dual station application.

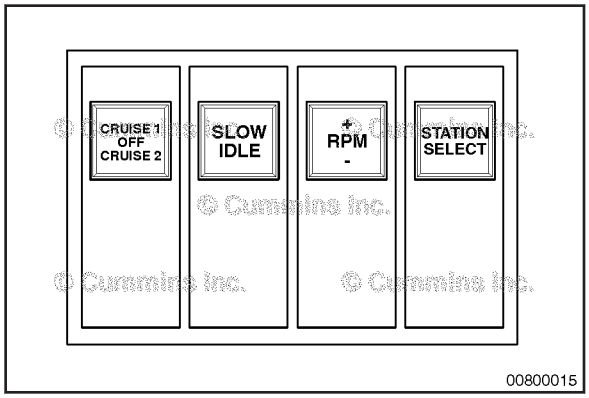

The C-Cruise switch configuration is for a single engine and single station application.

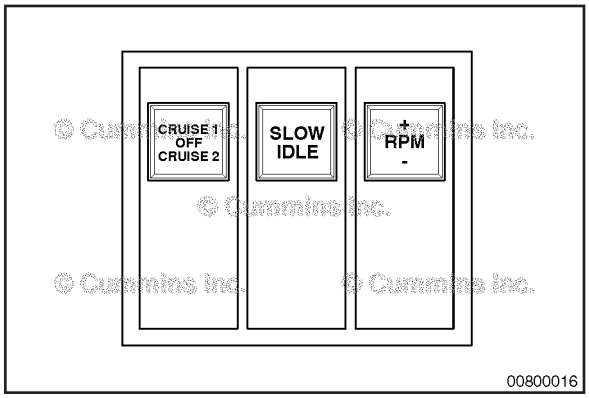

Engine Synchronization Switch

⚠ WARNING ⚠

The engine synchronization feature must be turned off before docking or low-speed maneuvering; this allows full and separate control of each engine. Failure to turn off the engine synchronization feature can cause personal injury, damage to the vessel, and/or the dock.

NOTE: The engine synchronization feature is an option available **only** on twin-engine vessels.

The engine synchronization feature provides the user the ability to synchronize engines based on a common reference speed determined by the master engine throttle position. The feature is activated by turning the SYNC switch (1) on.

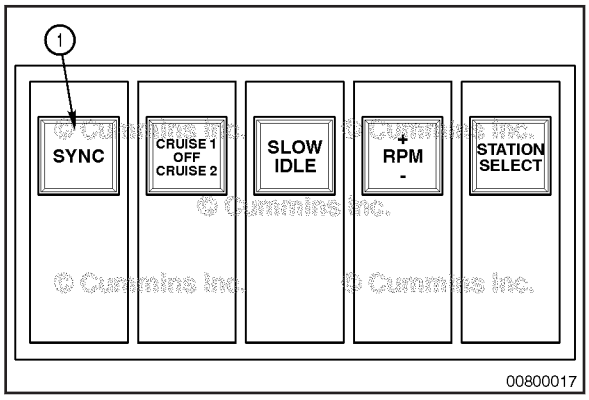

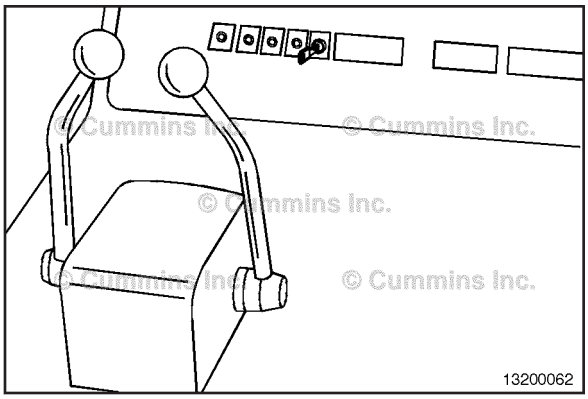

Normally the starboard throttle is used as the master engine throttle. The distributor or dealer can change it to the port throttle, if desired, by changing the master and slave plugs in the engine wiring. Refer to the installation manual.

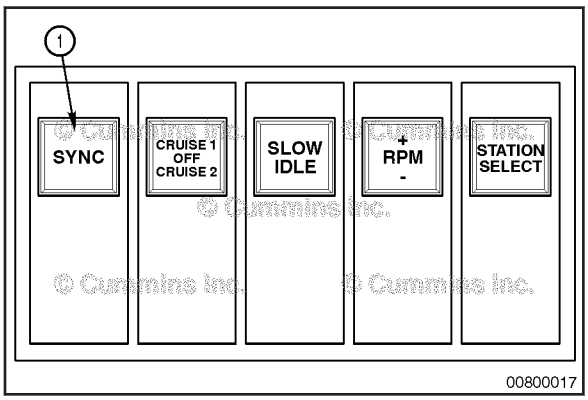

To use the engine synchronization feature:

- Both engines **must** be in the same throttle position, running at the same rpm.
- Put the SYNC switch (1) in the ON position by depressing the top of the rocker switch.

Both engines will adjust to the same rpm. The master throttle will control both engines.

NOTE: This feature will deactivate when the engine is shut down. When the engine is restarted, the switch **must** be turned OFF then turned ON again to activate the feature.

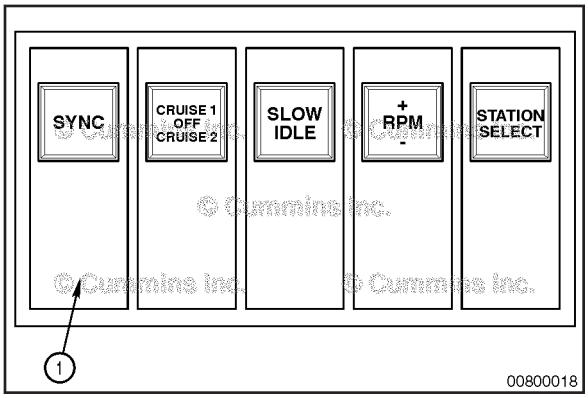

To turn the engine synchronization feature off:

1. Put the SYNC switch (1) in the OFF position by depressing the bottom of the rocker switch.
2. Move either throttle lever to within 100 rpm of the other and the feature will deactivate. The throttle levers will now operate independently.

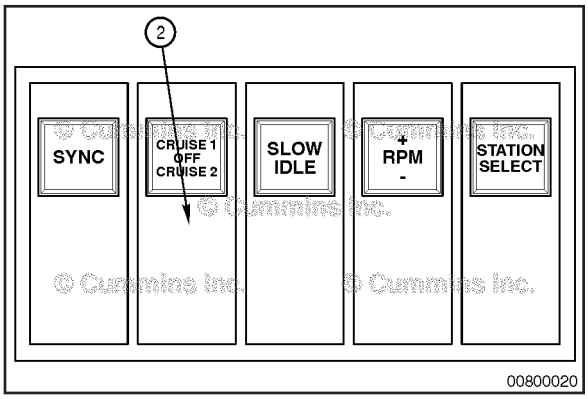

Marine Cruise Control

This feature provides the user the ability to set two vessel cruise speeds. The engines are shipped from the factory with default values pre-loaded. The user can set these values depending on their preference, and these setpoints can be modified as required. The feature is activated by turning the Cruise 1/Cruise 2 rocker switch to the desired position. Cruise 1 and Cruise 2 setpoints are retained after a keyswitch OFF cycle.

To buy Cummins Parts and Service Manuals, Training Guides, or Tools go to our website at https://store.cummins.com

There are two options for activating the cruise control feature.

Option 1

- Put the cruise switch (2) in the desired position, CRUISE 1 or CRUISE 2.
- Move the throttle(s) past the desired cruise speed.

The engine(s) speed will increase to the cruise setting.

Option 2

- Move the throttle past the cruise setpoint.
- Press the CRUISE 1 or CRUISE 2.

The engine(s) speed will decrease to the cruise setting.

NOTE: When using the engine synchronization feature, the master throttle is the **only** throttle that **must** be moved past the cruise point.

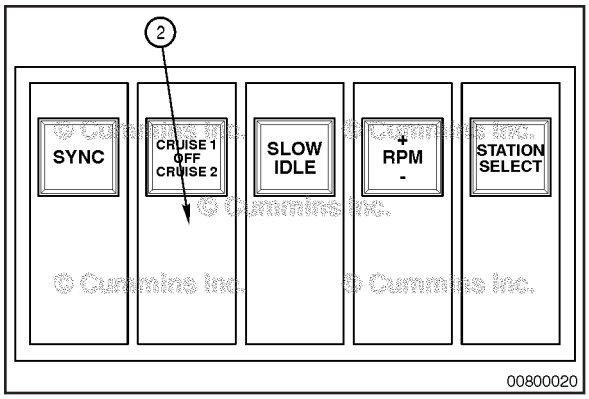

To turn the marine cruise control off, put the cruise switch (2) in the OFF position (rocker switch in the center position).

The engine(s) rpm will slowly ramp to the throttle lever setting.

NOTE: The engine will maintain cruise control even with the switch in the OFF position until the throttle is decreased below the cruise rpm.

When changing between CRUISE 1 and CRUISE 2, the engine will ramp up or down to the new desired cruise setting.

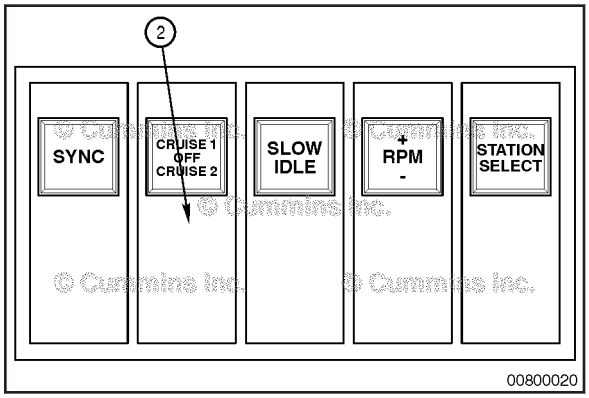

To change the CRUISE 1 or CRUISE 2 default setting rpm:

1. With the engine running, select the cruise setting that you want by setting cruise control switch (2) to CRUISE 1 or CRUISE 2.
2. Move the throttle, both if twin-engine, to the full throttle position while underway, or at the dock with the gear in neutral. The engine will **not** exceed the existing cruise setting. For example; if CRUISE 2 is at the factory setting of 1200 rpm, the engine will **only** reach 1200 rpm at full throttle.
3. Using the RPM ± switch (4), adjust the cruise rpm to the new desired engine speed.

NOTE: The cruise speeds can be set between idle and rated engine speed. This new setting will be saved until the cruise is readjusted.

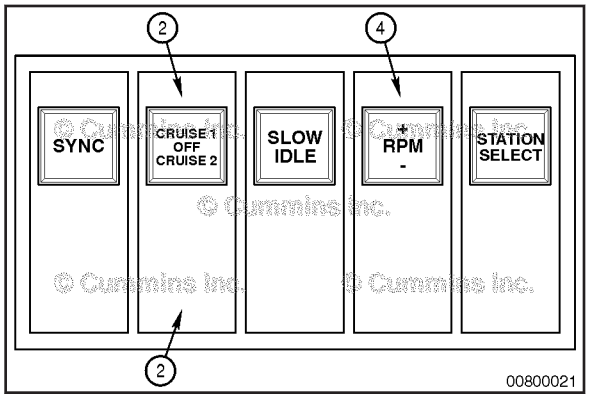

To buy Cummins Parts and Service Manuals, Training Guides, or Tools go to our website at https://store.cummins.com

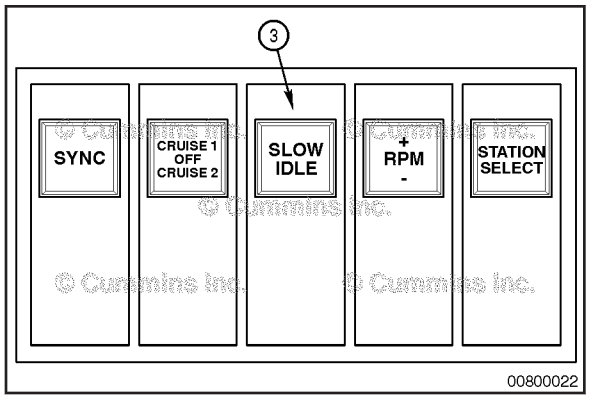

Slow Idle

⚠ WARNING ⚠

Deactivate the SLOW-IDLE feature during docking maneuvers. In- slow-idle mode propeller inertia can cause the engine to stall when shifting into forward or reverse, which can cause the user to collide with the dock. Failure to turn OFF the SLOW-IDLE feature can cause personal injury, damage to the vessel and/or the dock.

The SLOW-IDLE feature provides the user the ability to lower the engine idle speed to 550 rpm for operation in “No Wake Zones or Slow Boating Areas”. The engine will **only** react to this feature if the engine throttles are set to normal idle speed (600 rpm). For any throttle value above normal idle, this feature will **not** activate. Activating the SLOW-IDLE switch will result in stable 550 rpm engine speed.

NOTE: A single switch controls both engines on twin engine vessels.

To use the SLOW-IDLE feature:

1. The throttle **must** be in the idle position.
2. Put the SLOW-IDLE switch (3) in the ON position by depressing the top of the rocker switch.

The engine(s) idle will decrease to programmed speed.

NOTE: This feature will deactivate when the engine is shut down. When the engine is restarted, the switch **must** be turned OFF then turned ON again to activate the feature.

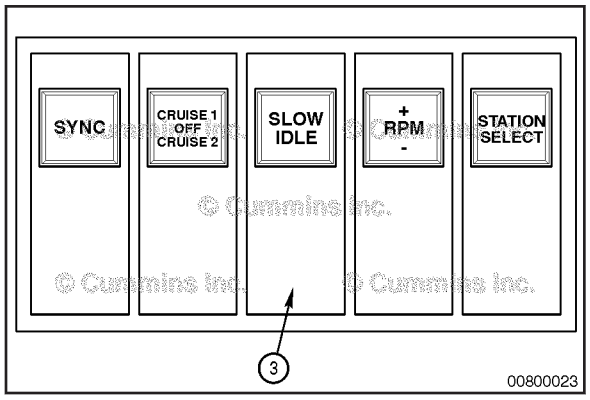

To turn the SLOW-IDLE feature off, put the SLOW-IDLE switch (3) in the OFF position by depressing the bottom of the rocker switch.

The engine(s) will adjust to the idle set speed.

NOTE: When the SLOW-IDLE switch is on, increasing the throttle will temporarily turn off the SLOW-IDLE feature. When the throttle is moved back into the idle position, the SLOW-IDLE feature will automatically turn itself ON again.

To buy Cummins Parts and Service Manuals, Training Guides, or Tools go to our website at https://store.cummins.com

Engine Speed Control

This feature provides the user the ability to increment or decrement the engine idle speed at 25 rpm per step to suit their individual preference. The limits are defined as 600 rpm for the low limit and 1000 rpm for the high limit. Once set, the engine idle speed will remain at the setpoint until changed. The engine speed will remain at the set point even after a keyswitch cycle.

NOTE: The idle speed of the engine can become offset if the switch is pressed too rapidly. To get the engine back up to a common idle speed, continue to press the idle (-) switch until both engines return to 600 rpm.

The engine speed control (rpm ±) switch (4) allows the idle speed to be adjusted in 25-rpm increments by pressing the rocker switch.

Pressing the top of the switch increases (+) engine rpm.

Pressing the bottom of the switch decreases (-) engine rpm.

NOTE: Use slow deliberate clicks to increase or decrease the engine rpm.

When the RPM ± switch (4) is used with the engine at idle, the switch will **only** work from 600 to 1000 rpm.

NOTE: The RPM ± switch (4) will **not** change the idle speed when the engine is in SLOW-IDLE mode.

Use of the SLOW-IDLE feature will deactivate the RPM ± feature.

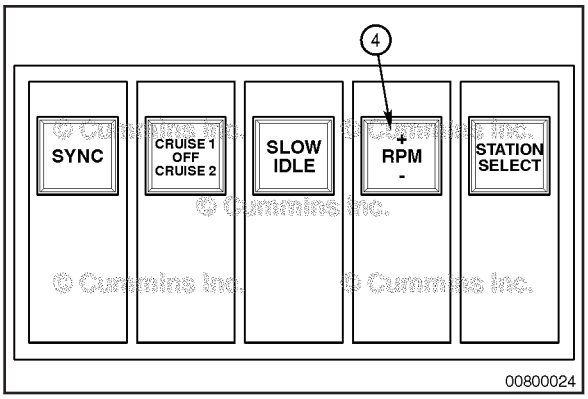

Station Select

The Station Select switch (5) and associated functionality is **only** required on applications where dual control stations are present. Selection of this feature allows for the control of the above described features at the control surface. In twin station configurations the Active Station will be the station where the lamp indicator in the switch is illuminated. If the Active Station switch indicator is **not** illuminated, functionality of the features are **not** available.

NOTE: Selection of the Station Select switch (5) does **not** control the throttle activation. In applications where electronic throttles exists in twin station applications, the throttle at the controlling station **must** be activated separately. Typically the throttle device will have a Station Select button that will activate the particular station. With most electronic throttle systems, no stations are active at power up and the user **must** activate a particular station.

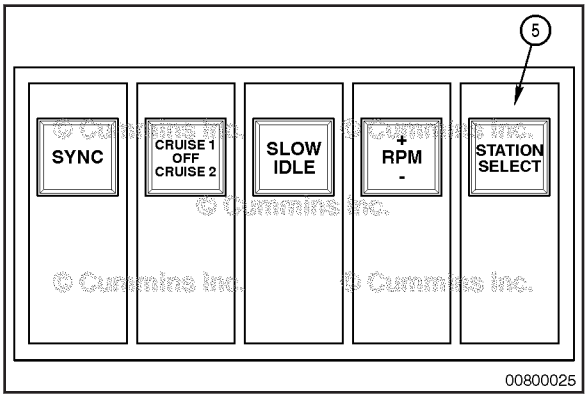

Electronic Controlled Fuel System

Theory of Operation

The CM850 (CM2850) marine engine control system is an electronically operated fuel control system that also provides many operator and vessel features. The base functions of the control system include fueling and timing control, limiting the engine speed operating range between the low-idle and high-idle set points, and optimizing engine performance while maintaining emissions compliance. The control system uses inputs from the operator and sensors to determine the fueling and timing required to operate at the desired engine speed, and at the required emissions level.

The engine control module (ECM) is the control center of the system. It processes all of the inputs and sends commands to the fuel system and engine control devices. The ECM performs diagnostic tests on most of its circuits

To buy Cummins Parts and Service Manuals, Training Guides, or Tools go to our website at https://store.cummins.com

and will activate a fault code if a problem is detected in one of these circuits. Along with the fault code identifying the problem, a snapshot of engine operating parameters at the time of fault code activation is also stored in memory. Active fault codes will cause a diagnostic lamp to activate and signal the operator of the fault.

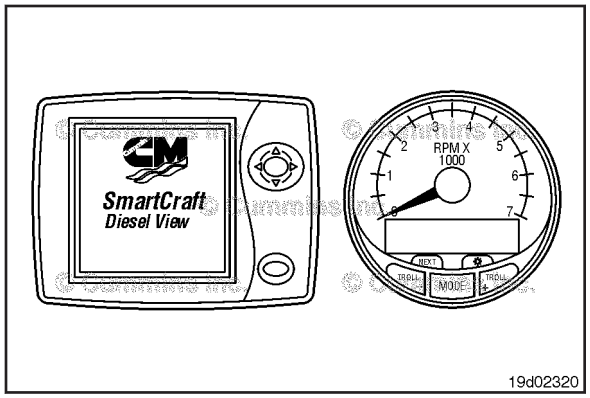

Diagnostic Fault Codes

The electronic engine control system can display and record certain detectable fault conditions. These conditions are displayed as fault codes, making troubleshooting easier. The fault codes are retained in the ECM.

If the vessel is equipped with a Marine Electronic Engine Display or Smartcraft™ Diesel View and/or Smartcraft™ Tachometer, see the operation manuals supplied with these units for instruction on how to read the fault codes. If the vessel is equipped with the Cummins supplied controls system, refer to C Command Connect and Connect Premier Marine Panel System PS102 & PS103 Owners Manual, Bulletin 5411481, for additional information. If the vessel is **not** equipped with these systems, see a Cummins® Authorized Repair Location.

Electromagnetic Interference (EMI)

General Information

Some applications utilize accessories such as (CB radios, mobile transmitters, etc.) if not installed and used correctly the radio frequency energy generated by these accessories can cause electromagnetic interference (EMI) conditions to exist between the accessory and the Cummins electronically controlled systems. Cummins is **not** liable for any performance problems with either the electronically controlled systems or the accessory due to EMI. EMI is **not** considered by Cummins to be a system failure and therefore is **not** warrantable.

System EMI Susceptibility

Your Cummins product has been designed and tested for minimum sensitivity to incoming electromagnetic energy. Testing has shown that there is no performance degradation at relatively high energy levels; however, if very high energy levels are encountered, then some noncritical diagnostic fault code logging can occur. The electronically controlled systems EMI susceptibility level will protect your systems from most, if **not** all, electromagnetic energy-emitting devices that meet the legal requirements.

System EMI Radiation Levels

Your Cummins product has been designed to emit minimum electromagnetic energy. Electronic components are required to pass various Cummins and industry EMI specifications. Testing has shown that when the systems are properly installed, they will not interfere with onboard communication equipment or with the vehicle's, equipment's, or vessel's ability to meet any applicable EMI standards and regulated specifications.

If an interference condition is observed, follow the suggestions below to reduce the amount of interference:

1 Locate the transmitting antenna as far away from the electronically controlled systems and as high as possible.

2 Locate the transmitting antenna as far away as possible from all metal obstructions (e.g., exhaust stacks)

3 Consult a representative of the accessory supplier in your area to:

- Accurately calibrate the device for proper frequency, power output, and sensitivity (both base and remote site devices **must** be properly calibrated)
- Obtain antenna reflective energy data measurements to determine the optimum antenna location
- Obtain optimum antenna type and mounting arrangement for your application
- Make sure your accessory equipment model is built for maximum filtering to reject incoming electromagnetic noise.

To buy Cummins Parts and Service Manuals, Training Guides, or Tools go to our website at https://store.cummins.com

Section 2 - Maintenance Guidelines

Section Contents

Page
Maintenance Guidelines - Overview 2-1
General Information 2-1
Maintenance Record Form 2-5
Maintenance Data 2-5
Maintenance Schedule 2-3
General Information 2-3
Tool Requirements 2-2
General Information 2-2

To buy Cummins Parts and Service Manuals, Training Guides, or Tools go to our website at https://store.cummins.com

This Page Left Intentionally Blank

Maintenance Guidelines - Overview

General Information

Cummins Inc. recommends that the system be maintained according to the Maintenance Schedule in this section.

If the system is operating in ambient temperatures below -18°C [0°F] or above 38°C [100°F], perform maintenance at shorter intervals. Shorter maintenance intervals are also required if the system is operated in a dusty environment or if frequent stops are made. For gas fueled generator sets, shorter maintenance intervals are also required, if operating at loads below 70% for prolonged periods. Contact your local Cummins® Authorized Repair Location for recommended maintenance intervals.

Some of these maintenance procedures require special tools or must be completed by qualified personnel. Contact your local Cummins® Authorized Repair Location for detailed information.

If your system is equipped with a component or accessory not manufactured or supplied by Cummins Inc., refer to the component manufacturer's maintenance recommendations.

OEM supplied equipment and components can impact on the performance and reliability of the engine if they are not correctly maintained.

Use the chart provided in this section as a convenient way to record maintenance performed.

To buy Cummins Parts and Service Manuals, Training Guides, or Tools go to our website at https://store.cummins.com

Tool Requirements

General Information

Most of the maintenance operations described in this manual can be performed with common hand tools (metric and S.A.E. wrenches, sockets, and screwdrivers).

The following is a list of special service tools required for some maintenance operations:

Tool Part Number	Description	Used to
3400158	Filter wrench	Replace oil and fuel filters
CC-2800	Refractometer	Check antifreeze concentration and battery specific gravity
3164044	Fuel pressure gauge adapter	Check for air in fuel and to measure fuel pressure
ST-1273	Pressure gauge 0 to 1905 mm Hg [0 to 75 in Hg]	Measure intake manifold pressure
3375432	Crack detection kit	Check for cracks
3824591	Barring tool	Rotate the engine
3398172	Torque wrench (click 0 to 250 in-lb)	Torque capscrews on engine
3398105	Torque wrench (click 15 to 100 ft-lb)	Torque capscrews on engine
3397571	Feeler gauges	Check and set valve lash
ST-1293	Belt tension gauge (dial type)	Check belt tension (6 to 8 v-ribbed belts)
3377161	Multimeter	Measure voltage on electrical equipment
3824963	Thermocouple module	Convert 3377161 multimeter to a temperature gauge
3824645	Pressure module	Convert 3377161 multimeter to a pressure gauge
3822666	Digital thermometer	Conduct temperature differential tests
3822566	Blowby checking tool	Check engine crankcase blowby

Contact a Cummins® Authorized Repair Location for the required service tools.

To buy Cummins Parts and Service Manuals, Training Guides, or Tools go to our website at https://store.cummins.com

Maintenance Schedule

General Information

Perform maintenance at whichever interval occurs first. At each scheduled maintenance interval, perform all previous maintenance checks that are due for scheduled maintenance.

Maintenance Procedures at Daily Interval ..... Section 3

- Marine Gear Oil - Check[1]
- Sea Water Strainer - Clean
- Coolant Level - Check
- Fuel-Water Separator - Drain
- Lubricating Oil Level - Check
- Air Cleaner Assembly (Engine-Mounted) - Check

Maintenance Procedures at 250 Hours or 6 Months ..... Section 4

- Zinc Anode - Replace[2]

Maintenance Procedures at 250 Hours or 1 Year ..... Section 5

- Lubricating Oil and Filters - Change[3]

Maintenance Procedures at 500 Hours or 1 Year ..... Section 6

- Sea Water Pump - Repair
- Sea Water Hoses - Check
- Fuel-Water Separator - Change
- Fuel Filter (Spin-On Type) - Change
- Supplemental Coolant Additive (SCA) and Antifreeze Concentration - Check
- Coolant Filter - Change[4]
- Radiator Pressure Cap - Check
- Air Cleaner Assembly (Engine-Mounted) - Clean[5]
- Air Intake Piping - Check
- Batteries - Check
- Battery Cable and Connections - Check
- Engine Wiring Harness - Check
- Engine Mounting Bolts - Inspect for Reuse
- Marine Vibration Isolator - Check
- Heat Exchanger - Flush
- Marine Gear Oil Cooler - Flush
- Marine Gear Oil and Fuel Cooler Assembly - Flush
- Aftercooler Assembly (Sea Water) - Flush

Maintenance Procedures at 1500 Hours ..... Section 7

- Overhead Set - Adjust[6]

Maintenance Procedures at 3 Years ..... Section 8

- Aftercooler Assembly (Sea Water) - Inspect for Reuse[7]

Maintenance Procedures at 2000 Hours or 4 Years ..... Section 9

- Cooling System - Flush[8]
- Vibration Damper, Viscous - Clean

1 Follow the gear manufacturers recommended maintenance procedures for checking, filling, and changing oil. Some gear manufacturers require an initial oil change at low hours, in addition to their regular maintenance.

To buy Cummins Parts and Service Manuals, Training Guides, or Tools go to our website at https://store.cummins.com

2 Depending upon the quality of electrical bonding and water conditions, increased maintenance of the zinc anode plugs could possibly be necessary.

3 The lubricating oil and filter change interval is 500 hours if Ultra Low Sulphur Diesel (ULSD) fuel is exclusively used.

4 Do **not** change the coolant filter if the SCA concentration level is over three units.

5 For engines equipped with a disposable air cleaner, the air cleaner **must** be replaced at this interval. To determine if the air cleaner is disposable, check the part number on the air cleaner. Refer to Procedure 018-024 in Section V.

6 Engines with rated power under 450hp **only** need the overhead set at 5000 hours.

7 Use the Clean and Inspect for Reuse section in the following procedure. Refer to Procedure 010-005 in Section 6.

8 This cooling system requirement to flush at this scheduled maintenance includes: drain, flush, and fill.

To buy Cummins Parts and Service Manuals, Training Guides, or Tools go to our website at https://store.cummins.com

Maintenance Record Form

Maintenance Data

Maintenance Record	
Product Serial No.:	Product Model:
Owner's Name:	Equipment Model/Number:

Key to table headings:
A = Date
B = Schedule km [Miles], Hours or Time Interval
C = Actual km [Miles] Hour or Time
D = Maintenance Check Performed
E = Check Performed By
F = Comments

A	B	C	D	E	F

To buy Cummins Parts and Service Manuals, Training Guides, or Tools go to our website at https://store.cummins.com

Notes

Section 3 - Maintenance Procedures at Daily Interval

Section Contents

Page
Air Cleaner Assembly (Engine-Mounted) 3-7
Initial Check 3-7
Coolant Level 3-5
Maintenance Check 3-5
Daily Maintenance Procedures - Overview 3-1
General Information 3-1
System Operation Report 3-1
Unusual System Noise 3-1
Fuel-Water Separator 3-6
Drain 3-6
Lubricating Oil Level 3-6
General Information 3-6
Maintenance Check 3-7
Marine Gear Oil 3-2
Maintenance Check 3-2
Sea Water Strainer 3-2
Assemble 3-4
Clean 3-4
Disassemble 3-3
General Information 3-2
Prime 3-4

To buy Cummins Parts and Service Manuals, Training Guides, or Tools go to our website at https://store.cummins.com

This Page Left Intentionally Blank

Daily Maintenance Procedures - Overview

General Information

Preventative maintenance begins with day-to-day awareness of the system. Before starting the system, check the appropriate fluid levels. Look for:

- Leaks
- Loose or damaged parts
- Worn or damaged belts
- Worn or damage low and high voltage harnesses
- Any change in system appearance.
- Odor of fuel
- Odor of electronic devices

System Operation Report

The system **must** be maintained in top mechanical and electronic condition if the operator is to get optimum satisfaction from its use. The maintenance department needs daily running reports from the operator to make necessary adjustments in the time allocated. The daily running report also helps to make provisions for more extensive maintenance work as the reports indicate the necessity.

Comparison and intelligent interpretation of the daily report, along with a practical follow-up action, will eliminate most failures and emergency repairs.

Report to the maintenance department any of the following conditions that may apply:

- Low lubricating oil pressure
- Low power
- Power increases or engine surge
- Erratic or no accelerator control or response
- Any warning lights flashing or staying on
- Abnormal water or oil temperature
- Unusual system noise
- Excessive smoke
- Excessive use of coolant, fuel, or lubricating oil
- Any fuel, coolant, or lubricating oil leaks
- Loose or damaged parts
- Worn or damaged belts
- Worn or damaged low or high voltage harnesses

Unusual System Noise

During daily maintenance checks, listen for any unusual system noise(s) that can indicate that service is required.

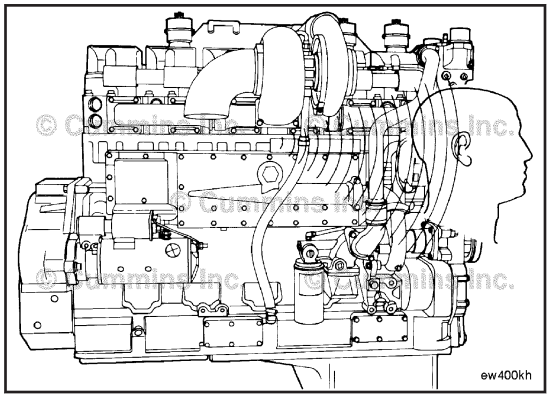

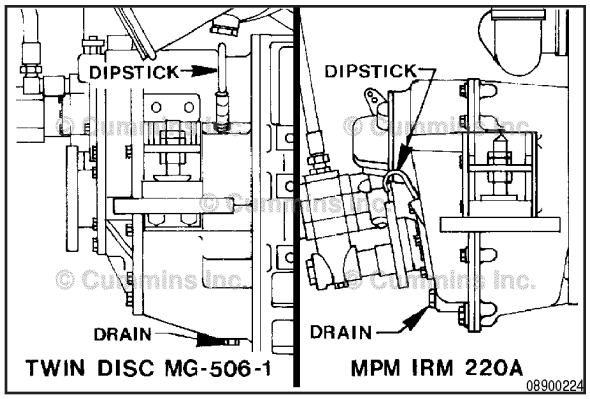

Marine Gear Oil

Maintenance Check

Consult the marine gear manufacturer's operator manual for oil specifications, quantities, and all necessary maintenance required.

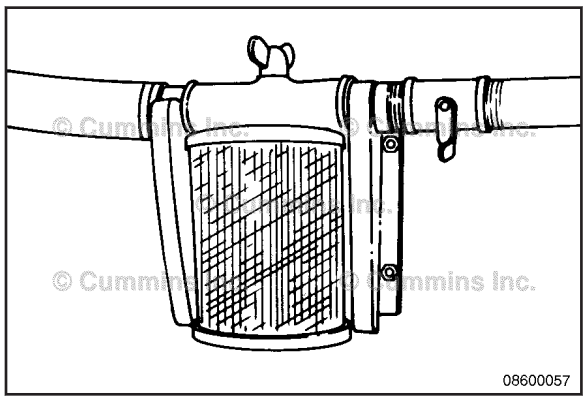

Sea Water Strainer

General Information

Most sea water systems for heat exchanger cooled engines use a sea water strainer. The strainer removes debris from the sea water before it enters the sea water pump.

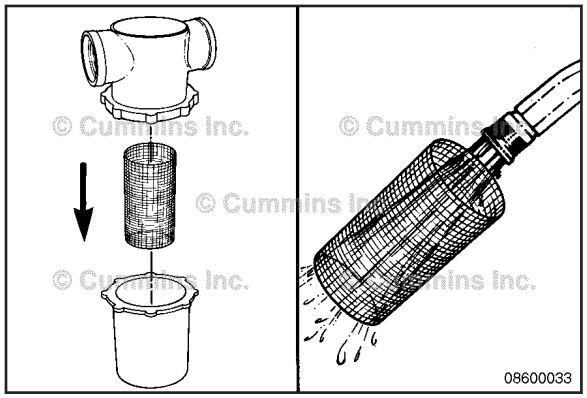

Sea water strainer arrangements may differ.

Inspect the sea water strainer daily for any foreign objects that could restrict water flow.

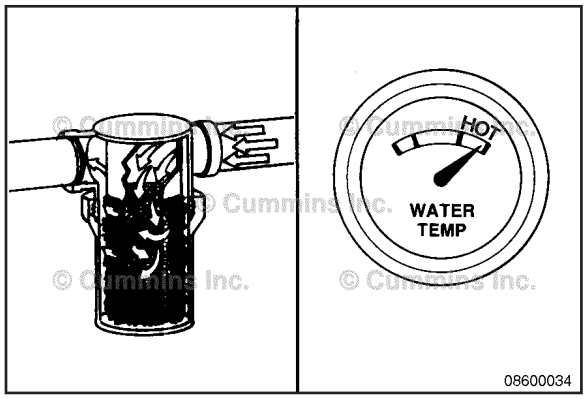

CAUTION

A restricted or clogged sea water strainer can result in hotter than normal, or overheated, engine coolant and marine gear oil temperatures.

For more detailed information, refer to Sea Water Strainer Cleaning in this section.

To buy Cummins Parts and Service Manuals, Training Guides, or Tools go to our website at https://store.cummins.com

If the sea water strainer is below the water level, close the sea water inlet valves before servicing the sea water strainer.

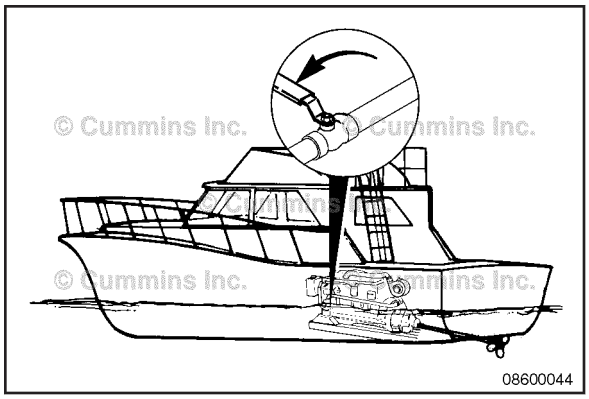

Disassemble

Loosen and remove the sea water strainer wing nut(s) as required.

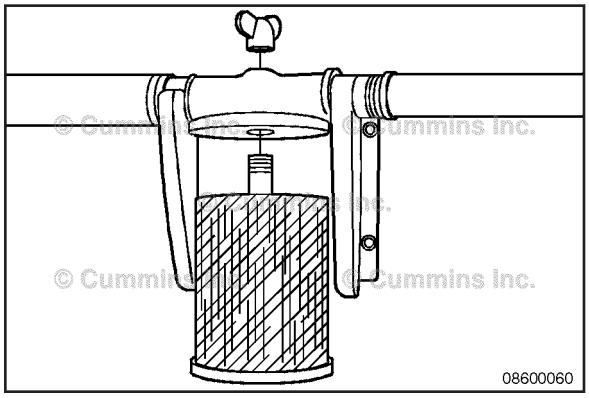

Remove the sea water strainer assembly. Be careful **not** to damage o-ring. Retain and inspect for damage.

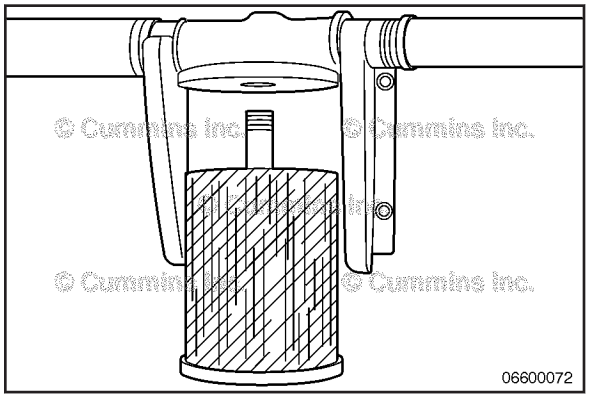

Remove the sea water strainer basket.

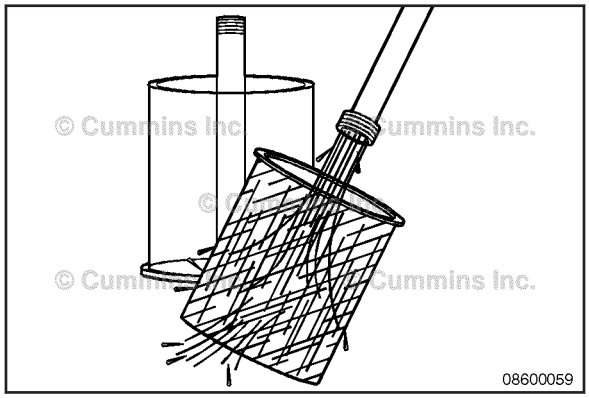

To buy Cummins Parts and Service Manuals, Training Guides, or Tools go to our website at https://store.cummins.com

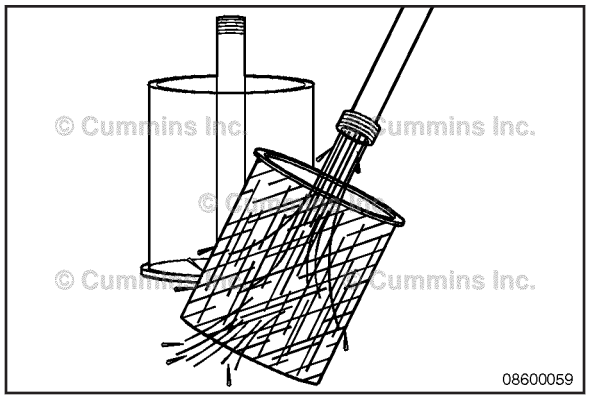

Clean

Empty all debris from the sea water strainer basket.

Clean the sea water strainer.

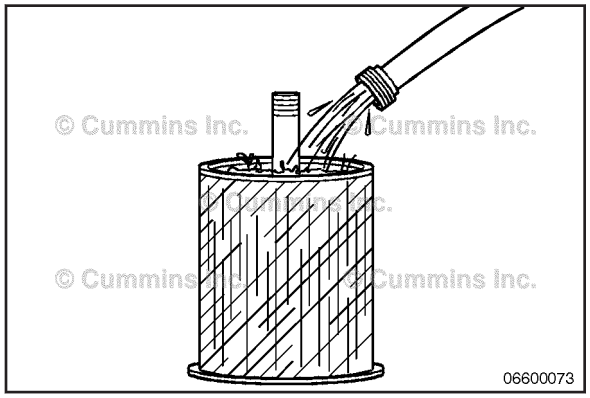

Prime

Prime the sea water strainer with clean water.

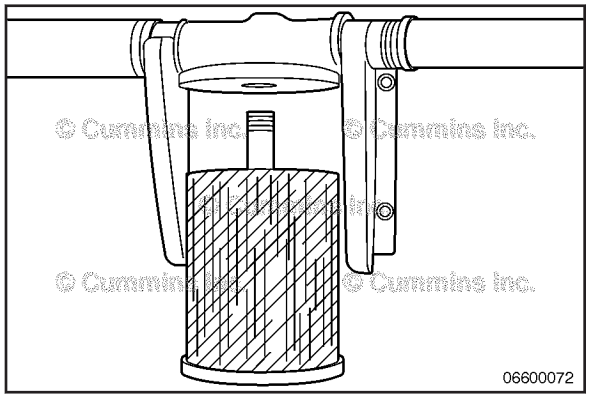

Assemble

Install the sea water strainer.

Inspect o-ring seal for tears or damage. Replace if necessary. Be sure o-ring is seated properly.

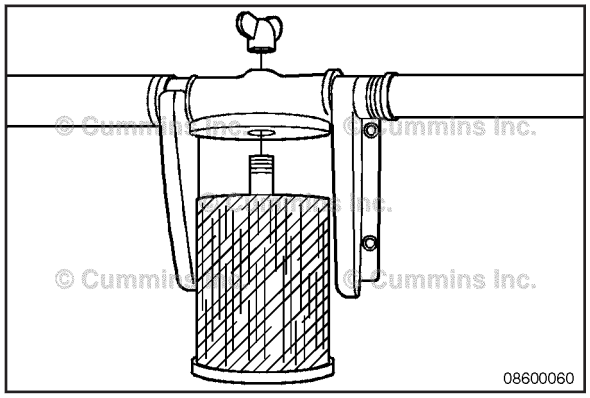

Install and tighten the wing nut(s).

To buy Cummins Parts and Service Manuals, Training Guides, or Tools go to our website at https://store.cummins.com

Open the sea water inlet valves.

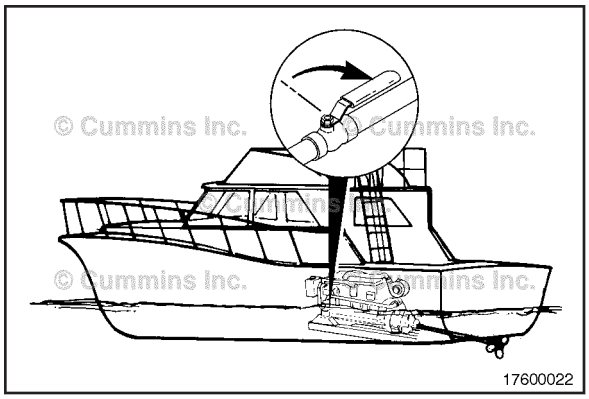

Coolant Level

Maintenance Check

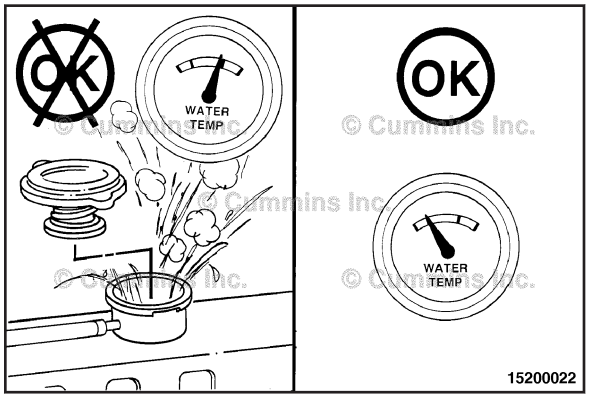

⚠WARNING⚠
Do not remove a pressure cap from a hot engine. Wait until the coolant temperature is below 50°C [120°F] before removing the pressure cap. Heated coolant spray or steam can cause personal injury.

⚠CAUTION⚠
Never use a sealing additive to stop leaks in the cooling system. This can result in cooling system plugging and inadequate coolant flow, causing the engine to overheat.

The coolant level **must** be checked daily.

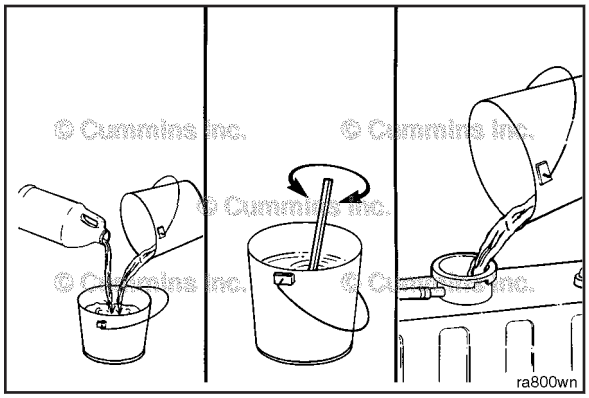

⚠CAUTION⚠
Do not add cold coolant to a hot engine. Engine castings can be damaged. Allow the engine to cool to below 50°C [120°F] before adding coolant.

Coolant added to the engine **must** be mixed with the correct proportions of antifreeze, supplemental coolant additive, and water to avoid engine damage.

Coolant recommendations and specification details on correct mixing of coolant can be found in Maintenance Specifications (Section V).

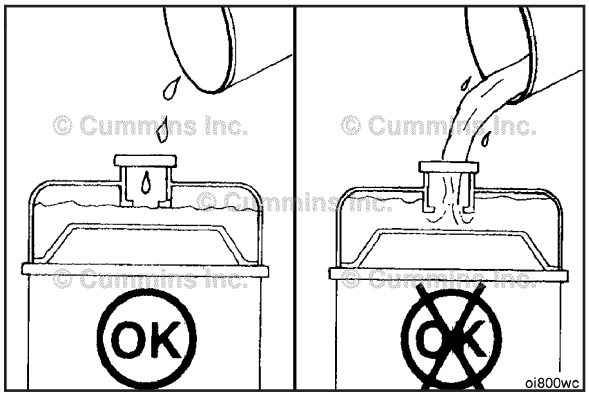

Fill the cooling system with coolant. Refer to the markings on the radiator or expansion tank for coolant levels or refer to the OEM manual.

NOTE: Some radiators have two fill necks, both of which **must** be filled when the cooling system is drained.

To buy Cummins Parts and Service Manuals, Training Guides, or Tools go to our website at https://store.cummins.com

Fuel-Water Separator

Drain

⚠CAUTION⚠

Drain the water-fuel separator into a container and dispose of in accordance with local environmental regulations.

Cummins Inc. requires a water-fuel separator or fuel filter to be installed in the fuel supply system.

Drain the water and sediment from the separator daily.

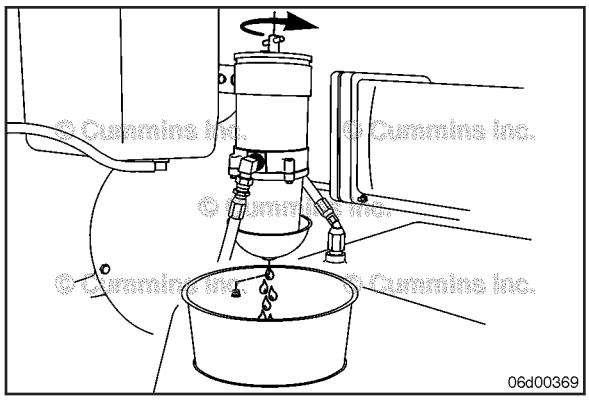

The collection bowl **must** be drained before contaminants reach the bottom of the turbine or when the water detector (optional) indicates it is time to 'drain water'. Inspect or drain the collection bowl of contaminants daily.

Loosen the T-handle to break the vacuum within the unit.

Open the self-venting drain fitting to evacuate contaminants.

If necessary, remove the lid and prime the unit by filling with clean fuel.

If removed, install the lid and tighten the T-handle, hand-tight **only**.

Lubricating Oil Level

General Information

The lubricating oil dipstick is located on the left bank side of the engine.

One side of the lubricating oil dipstick is labelled static and is calibrated for measuring the static lubricating oil level.

On specific engines, the other side of the lubricating oil dipstick is labelled run and is calibrated for measuring the running lubricating oil level.

To buy Cummins Parts and Service Manuals, Training Guides, or Tools go to our website at https://store.cummins.com

Maintenance Check

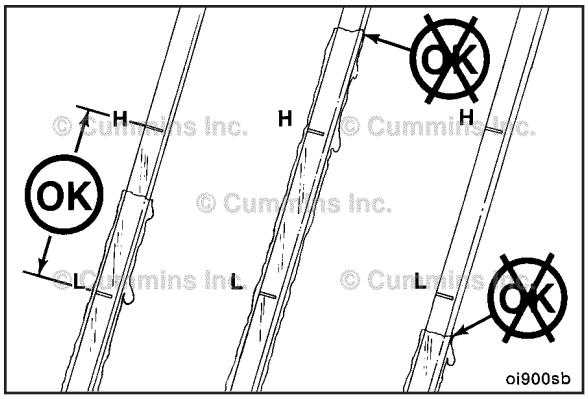

⚠CAUTION⚠
Never operate the engine with oil level below the L (low) mark or above the H (high) mark. Poor engine performance or engine damage can occur.

⚠CAUTION⚠
The engine must be level when checking the lubricating oil level to make sure the measurement is correct.

For a static oil level check, shut the engine OFF for an accurate reading.

Wait 15 minutes after shutting the engine off to check the lubricating oil level. This allows time for the oil to drain into the oil pan.

Remove the lubricating oil dipstick and assess the lubricating oil level.

Ensure oil level is between the low (L) and high (H) marks on the static side of the dipstick.

For additional lubricating oil recommendations and lubricating oil pan capacity information, see Section V.

For a run oil level check, run the engine at idle and ensure coolant temperatures have stabilized at 160°F [71°C] before performing the lubricating oil level check.

Remove the lubricating oil dipstick and assess the lubricating oil level.

For additional lubricating oil recommendations and lubricating oil pan capacity information, see Section V.

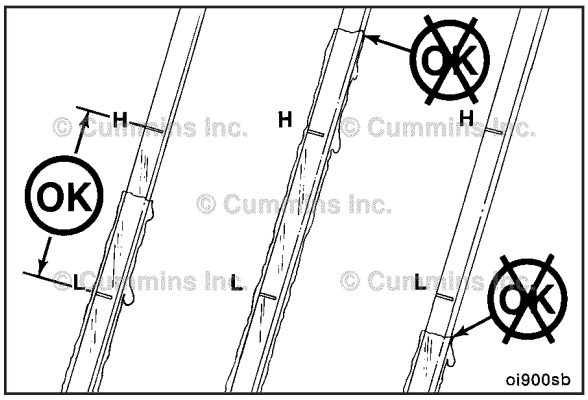

Air Cleaner Assembly (Engine-Mounted)

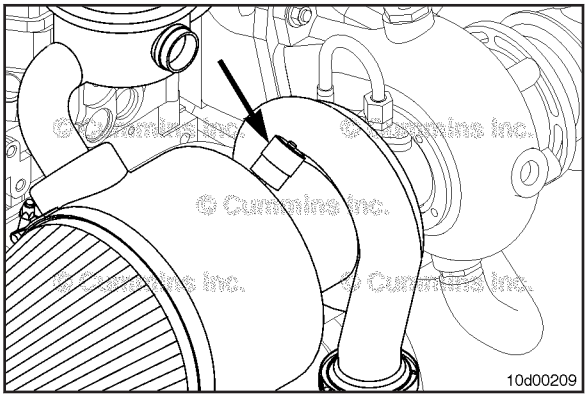

Initial Check

Check the restriction gauge on the air filter assembly. If the gauge is red, the air filter element **must** be cleaned or replaced. Refer to Procedure 010-013 in Section 6.

To buy Cummins Parts and Service Manuals, Training Guides, or Tools go to our website at https://store.cummins.com

Notes

Section 4 - Maintenance Procedures at 250 Hours or 6 Months

Section Contents

Page
Maintenance Procedures - Overview 4-1
General Information 4-1
Zinc Anode 4-1
Finishing Steps 4-5
General Information 4-1
Inspect for Reuse 4-3
Install 4-4
Preparatory Steps 4-2
Remove 4-2

To buy Cummins Parts and Service Manuals, Training Guides, or Tools go to our website at https://store.cummins.com

This Page Left Intentionally Blank

Maintenance Procedures - Overview

General Information

All maintenance checks and inspections listed in previous maintenance intervals **must** also be performed at this time, in addition to those listed under this maintenance interval.

Zinc Anode

General Information

There are two aftercooler designs available based on the engine option.

Horizontal Aftercooler Assembly

The horizontal aftercooler assembly is a horizontal setup with the water inlet and outlet connections on the front and back. The horizontal aftercooler assembly is part of Cooling System Option 1.

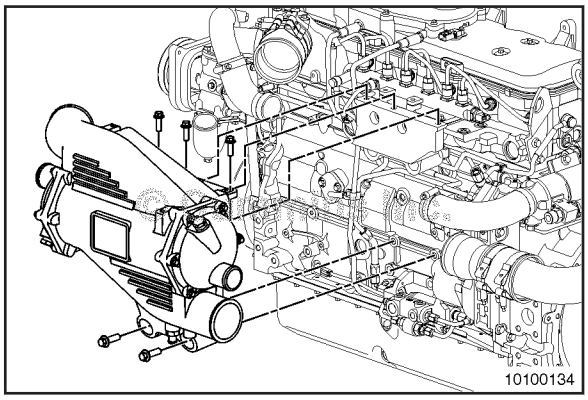

Vertical Aftercooler Assembly

The vertical aftercooler assembly has water inlet and outlet connections on the top and bottom. The vertical aftercooler assembly is part of Cooling System Option 2.

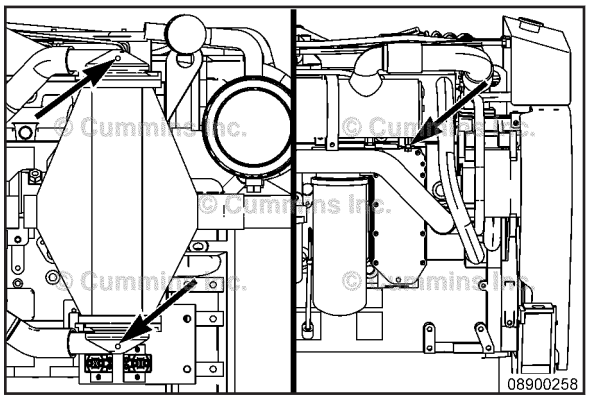

To buy Cummins Parts and Service Manuals, Training Guides, or Tools go to our website at https://store.cummins.com

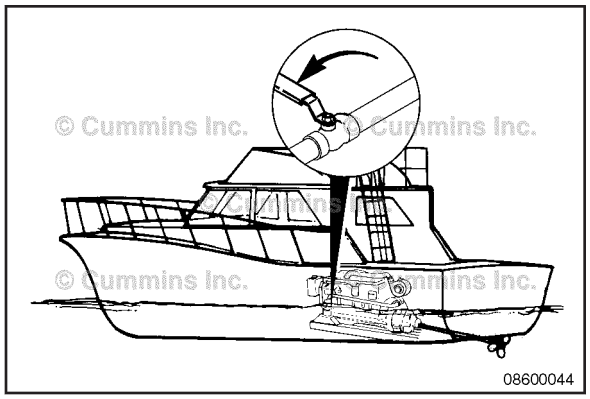

Preparatory Steps

- Close the sea water valve(s).

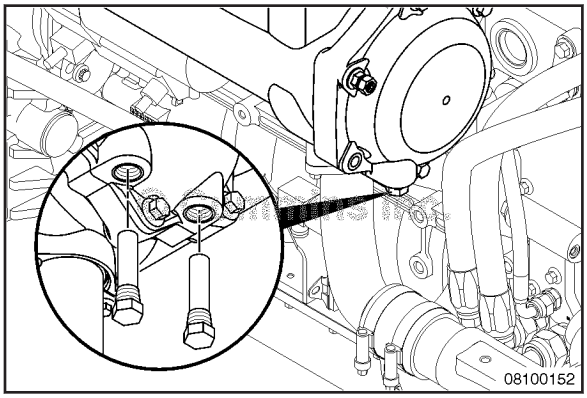

Remove

⚠CAUTION⚠
Zinc anode plugs expand and can break off during removal. Inspect the zinc anode plug to make sure it is in one piece. If not, it must be replaced with a new zinc anode plug, and the broken pieces must be retrieved from the aftercooler to prevent damage to components downstream in the sea water system.

⚠CAUTION⚠
In some cases, it will be necessary to hold the welded fitting on the heat exchanger with an additional wrench to prevent damage to the heat exchanger.

QSC and QSL marine engines have up to five zinc plugs (one in the gear cooler, if equipped, two in the aftercooler assembly, and one or two in the heat exchanger assembly).

Remove the two zinc anodes from the aftercooler.

Remove the one or two zinc anode plugs from the heat exchanger.

Remove the zinc anode plug from the marine gear oil cooler, if equipped.

To buy Cummins Parts and Service Manuals, Training Guides, or Tools go to our website at https://store.cummins.com

Inspect for Reuse

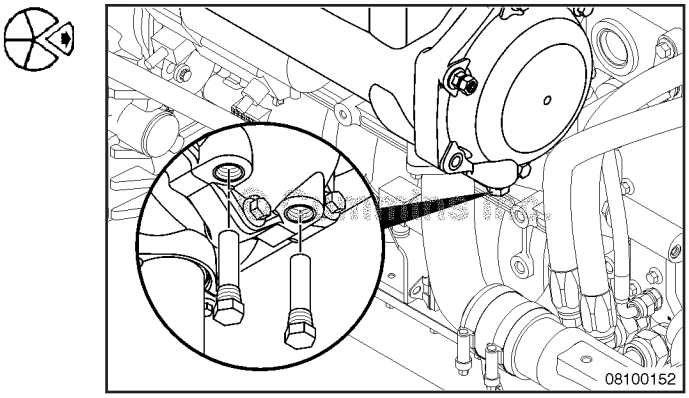

Inspect the sacrificial zinc plug and replace as required.

Place the zinc portion of the plug on a metal surface and strike the plug with a small hammer to remove loose material. This will help to determine the actual amount of material remaining.

Check the length of all the zinc plugs in the heat exchanger and aftercooler, (and marine gear oil cooler, if equipped), and replace them if they are 50 percent eroded. Frequency of replacement depends upon the chemical reaction of raw water circulated through the heat exchanger and aftercooler.

Zinc Plug Erosion Limits

	mm		in
A	19.0	MIN	0.75
New	51.0	MAX	2.00
B	6.4	MIN	0.25
New	16.0	MAX	0.63

If any zinc plug does **not** meet specification, replace it with a new zinc plug.

Inspect the aftercooler check valve when zinc anodes are checked.

Remove the aftercooler check valve.

Inspect the valve for the following conditions:

- The internal piston should rattle when shaken.
- Valve should flow air freely under low pressure.
- Valve should close under high-pressure. A pressure of over 0.5 psi from the threaded-side of the valve should make it close.

Operation can be checked using compressed air. Replace the valve if **not** operating properly.

Inspect the valve for excessive deposits on its interior surface. White deposits 1/16" thick or a clogged valve indicate an internal seawater leak requiring the aftercooler to be disassembled and inspected.

- Use the following procedure in the QSC8.3 and QSL9 Marine Operation and Maintenance Manual, Bulletin 4021571. Refer to Procedure 010-005 in Section 6.

Inspect the joint between the water connections and the housing. Leaks, excessive corrosion, or salt deposits can indicate an internal seawater leak requiring the aftercooler to be disassembled and inspected.

- Use the following procedure in the QSC8.3 and QSL9 Marine Operation and Maintenance Manual, Bulletin 4021571. Refer to Procedure 010-005 in Section 6.

To buy Cummins Parts and Service Manuals, Training Guides, or Tools go to our website at https://store.cummins.com

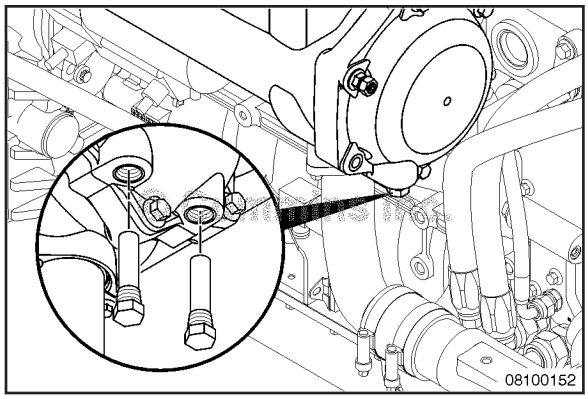

Install

CAUTION

Do not use thread sealant or Teflon™ 2122 tape on the zinc anodes. The use of any type of thread sealant will insulate the zinc anode and prevent a good ground.

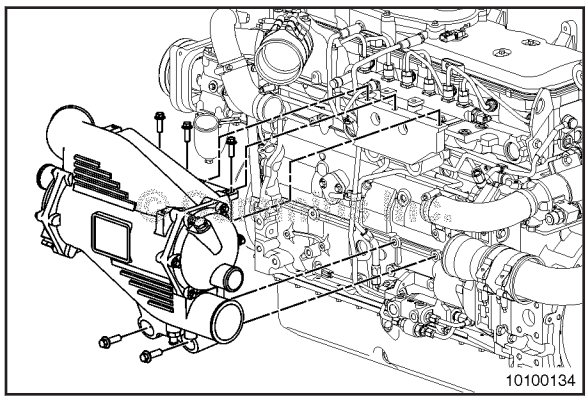

Cooling System Option 1

Horizontal Aftercooler Assembly Zinc Anode

Install the zinc anode plugs in the aftercooler assembly.

Torque Value: 30 N•m [22 ft-lb]

Install a new o-ring on the aftercooler check valve, if needed.

Install the aftercooler check valve.

Torque Value: 30 N•m [22 ft-lb]

Heat Exchanger Zinc Anode

Install the two zinc anodes into the heat exchanger.

Torque Value: 30 N•m [22 ft-lb]

Marine Gear Oil Cooler Zinc Anode

Install the zinc anode into the marine gear oil cooler, if equipped.

Torque Value: 22 N•m [195 in-lb]

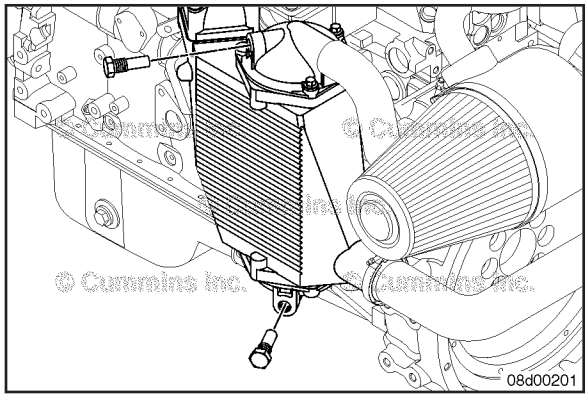

Cooling System Option 2

Vertical Aftercooler Zinc Anode

Install the two zinc anode plugs in the aftercooler assembly.

Torque Value: 30 N•m [22 ft-lb]

Install a new o-ring on the aftercooler check valve, if needed.

Install the aftercooler check valve.

Torque Value: 30 N•m [22 ft-lb]

To buy Cummins Parts and Service Manuals, Training Guides, or Tools go to our website at https://store.cummins.com

Heat Exchanger Zinc Anode

Install the zinc anode plug in the bottom of the heat exchanger.

Torque Value: 30 N•m [22 ft-lb]

Marine Gear Cooler Zinc Anode

Install the zinc anode plug into the gear cooler.

Torque Value: 22 N•m [195 in-lb]

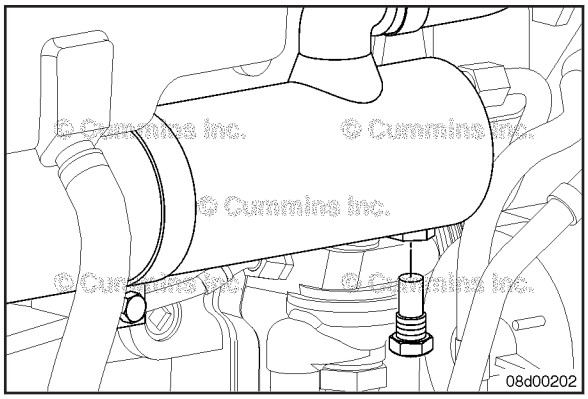

Finishing Steps

- Open the sea water supply valve(s).
- Operate the engine and check for leaks.

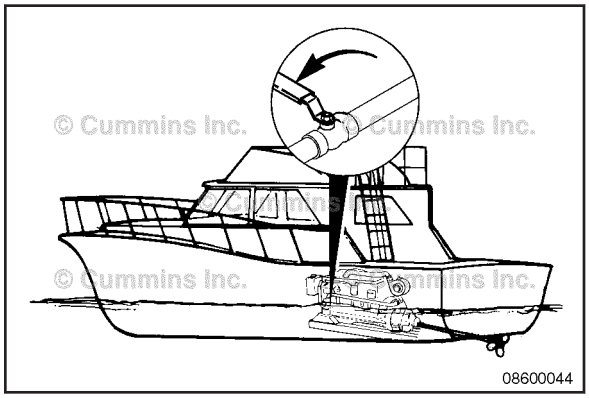

Notes

Section 5 - Maintenance Procedures at 250 Hours or 1 Year

Section Contents

Page
Lubricating Oil and Filters 5-1
Drain 5-1
Fill 5-3
Install 5-2
Remove 5-2
Maintenance Procedures - Overview 5-1
General Information 5-1

To buy Cummins Parts and Service Manuals, Training Guides, or Tools go to our website at https://store.cummins.com

This Page Left Intentionally Blank

Maintenance Procedures - Overview

General Information

All maintenance checks and inspections listed in previous maintenance intervals **must** also be performed at this time, in addition to those listed under this maintenance interval.

Lubricating Oil and Filters

Drain

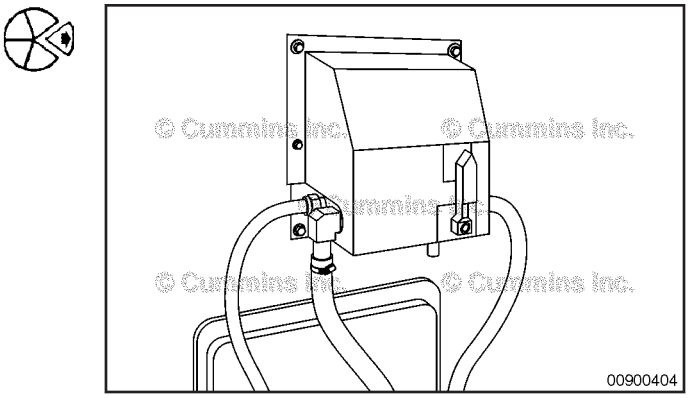

WARNING
To reduce the possibility of personal injury, avoid direct contact of hot oil with your skin.

WARNING
Some state and federal agencies have determined that used engine oil can be carcinogenic and cause reproductive toxicity. Avoid inhalation of vapors, ingestion, and prolonged contact with used engine oil. If not reused, dispose of in accordance with local environmental regulations.

CAUTION
Use caution when draining oil or replacing filters that oil is not spilled or drained into the bilge area. The oil and oil filers must be discarded in accordance with local environmental regulations.

NOTE: Use a container that can hold at least 23.6 liters [25 qt] of lubricating oil.

Operate the engine until the coolant temperature reaches 60°C [140°F]. Shut off the engine.

Place the lubricating oil pump-out device hose, if equipped, into a suitable container to hold the used lubricating oil.

Open the inlet valve to the lubricating oil pump-out device.

Start the pump-out device and drain the lubricating oil from the engine immediately, to be sure all the lubricating oil and suspended contaminants are removed from the engine.

Shut off the pump-out device after all the oil has been drained.

If a pump-out device was used, close the inlet valve.

To buy Cummins Parts and Service Manuals, Training Guides, or Tools go to our website at https://store.cummins.com

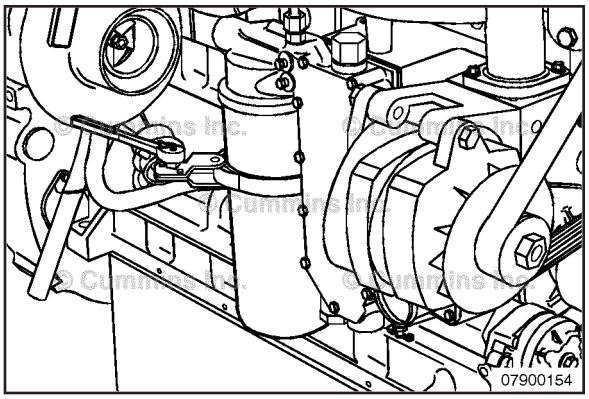

Remove

CAUTION

Use caution when draining oil or replacing filters that oil is not spilled or drained into the bilge area. The oil and oil filers must be discarded in accordance with local environmental regulations.

Clean the area around the lubricating oil filter head.

Use oil filter wrench, Part Number 3375049, to remove the lubricating oil filter.

Clean the gasket surface of the filter head with a clean, lint-free cloth.

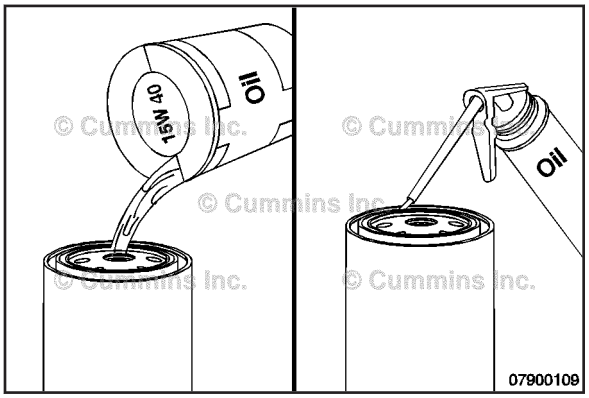

Install

CAUTION

The lubricating oil filter should be full of oil at start-up to prevent engine damage.

Use clean 15W-40 oil to coat the gasket surface of the filter.

Fill the filter with clean 15W-40 oil.

NOTE: Lubricating oil filters **must** have a filter bypass valve.

NOTE: The use of a lubricating oil filter without a filter bypass valve will result in low engine oil pressure if the filter becomes plugged.

Use the recommended lubricating oil filter. Refer to Procedure 018-024 in Section V.

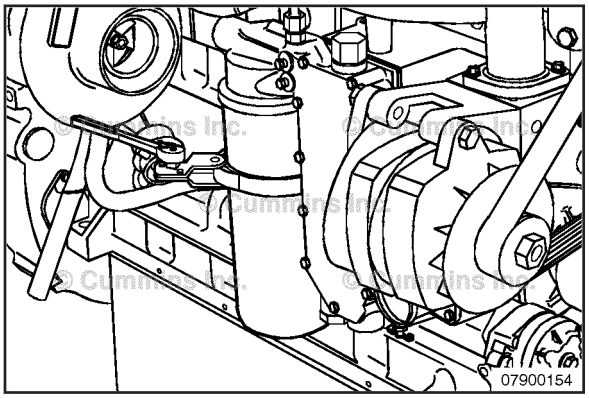

CAUTION

Mechanical overtightening of the filter can distort the threads or damage the filter element seal.

Install the filter on the oil filter head. Tighten the filter until the gasket contacts the filter head surface.

Use an oil filter wrench to tighten the filter. Refer to the filter manufacturer's instructions supplied with the filter.

To buy Cummins Parts and Service Manuals, Training Guides, or Tools go to our website at https://store.cummins.com

Fill

Use a high quality 15W-40 multiviscosity oil, such as Cummins® Premium Blue®, or equivalent, in Cummins® engines. Choose the correct oil for your operating climate. Refer to Procedure 018-003 in Section V.

Fill the engine with clean lubricating oil to the proper level.

NOTE: When filling the oil pan, use the fill tube on the side of the engine rather than on top of the rocker lever cover.

NOTE: If the engine is **not** equipped with a side-fill, wait at least 5 minutes before measuring the oil level with the dipstick to allow the oil to drain to the lubricating oil pan.

Service Tip: If the oil capacity of the oil pan is **not** known, fill the lubricating oil pan to the smallest oil pan capacity listed. Refer to Procedure 018-017 in Section V. Add 1 quart of oil at a time until it reaches the high mark on the dipstick. Record the number of quarts added so that capacity is known the next time the oil is drained.

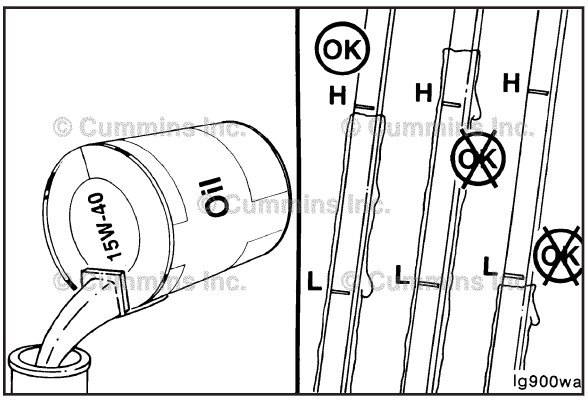

⚠CAUTION⚠

If no oil pressure is noted within 15 seconds after the engine is started, shut down the engine to reduce the possibility of internal damage.

Idle the engine to inspect for leaks at the drain plug, if removed, and the oil filter seal.

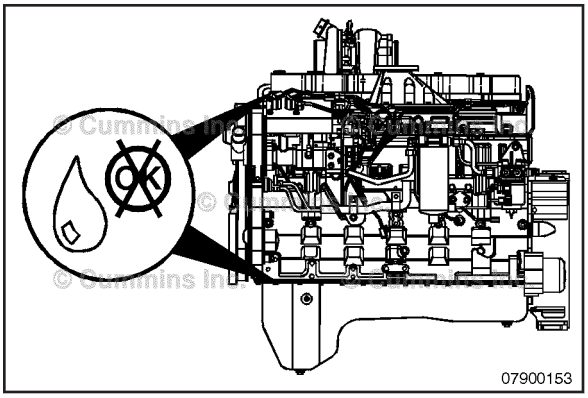

Shut off the engine. Wait approximately 5 minutes to let the oil drain from the upper parts of the engine. Check the level again.

Add oil as necessary to bring the oil level to the “H” (high) mark on the dipstick.

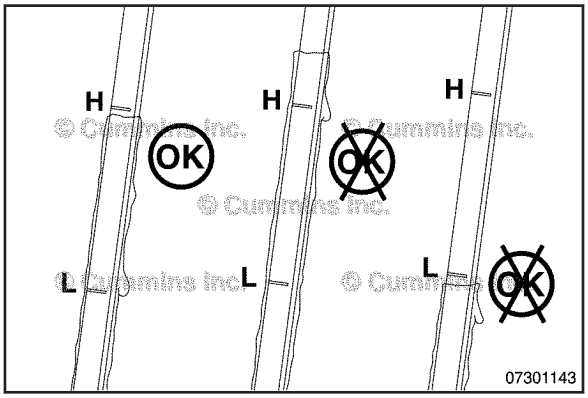

Notes

Section 6 - Maintenance Procedures at 500 Hours or 1 Year

Section Contents

Page
Aftercooler Assembly (Sea Water) 6-28
Assemble 6-36
Clean and Inspect for Reuse 6-34
Disassemble 6-31
Finishing Steps 6-39
Flush 6-39
Initial Check 6-28
Install 6-37
Preparatory Steps 6-29
Remove 6-31
Air Cleaner Assembly (Engine-Mounted) 6-13
Clean 6-14
General Information 6-13
Install 6-15
Remove 6-13
Air Intake Piping 6-15
Maintenance Check 6-16
Select Service Tools 6-15
Batteries 6-16
General Information 6-16
Battery Cables and Connections 6-17
Initial Check 6-17
Coolant Filter 6-10
Install 6-10
Remove 6-10
Engine Mounting Bolts 6-18
Inspect for Reuse 6-18
Engine Wiring Harness 6-18
Maintenance Check 6-18
Fuel Filter (Spin-On Type) 6-6
Finishing Steps 6-8
General Information 6-6
Install 6-7
Prime 6-8
Remove 6-7
Fuel-Water Separator 6-5
Install 6-5
Remove 6-5
Heat Exchanger 6-23
Flush 6-23
Maintenance Procedures - Overview 6-1
General Information 6-1
Marine Gear Oil and Fuel Cooler Assembly 6-26
Flush 6-26
Marine Gear Oil Cooler 6-25
Flush 6-25
Marine Vibration Isolator 6-18
Finishing Steps 6-23
General Information 6-18
Initial Check 6-19
Inspect for Reuse 6-22
Install 6-22
Preparatory Steps 6-21
Remove 6-21
Radiator Pressure Cap 6-11
General Information 6-11
Inspect for Reuse 6-12

To buy Cummins Parts and Service Manuals, Training Guides, or Tools go to our website at https://store.cummins.com

Sea Water Hoses 6-4
Inspect 6-4
Sea Water Pump 6-1
Repair 6-1
Supplemental Coolant Additive (SCA) and Antifreeze Concentration 6-9
Maintenance Check 6-9

To buy Cummins Parts and Service Manuals, Training Guides, or Tools go to our website at https://store.cummins.com

Maintenance Procedures - Overview

General Information

All maintenance checks and inspections listed in previous maintenance intervals **must** also be performed at this time, in addition to those listed under this maintenance interval.

Sea Water Pump

Repair

CAUTION

If the impeller has failed and pieces are missing, all pieces must be retrieved. The engine heat exchanger, marine gear oil cooler, marine gear oil cooler and fuel cooler assembly, and sea water aftercooler must be flushed. Refer to procedures 008-053 (Heat Exchanger) in Section 6, 008-041 (Marine Gear Oil Cooler) in Section 6, 008-129 (Marine Gear Oil and Fuel Cooler) in Section 6, and 010-005 (Aftercooler Assembly (Sea Water)) in Section 6, for flushing these components. Failure to do so can result in overheating and damage to engine can occur.

Impeller debris can also drop into the inlet piping. Make sure all debris is removed before installing a new impeller; otherwise, additional impeller failures or engine overheating will occur.

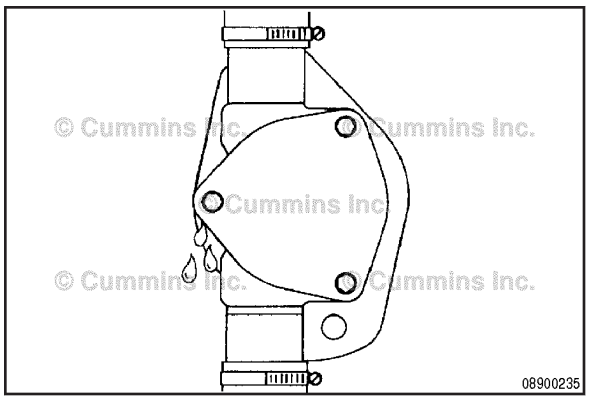

CAUTION

Zinc plugs expand and can break off during removal. Inspect the zinc plug to make sure it is in one piece. Refer to Procedure 008-059 (Zinc Anode) in Section 4. If not, it must be replaced with a new zinc plug, and the broken pieces must be retrieved from the aftercooler to prevent damage to components downstream in the sea water system.

Shut off the sea water supply.

Drain the sea water pump by removing the zinc plug from the aftercooler on QSL engines. Refer to Procedure 010-005 (Marine Gear Cooler and Fuel Cooler) in Section 6. On QSC engines, remove the plug at the bottom of the marine gear oil/fuel cooler assembly.

Remove the cover from the back of the sea water pump.

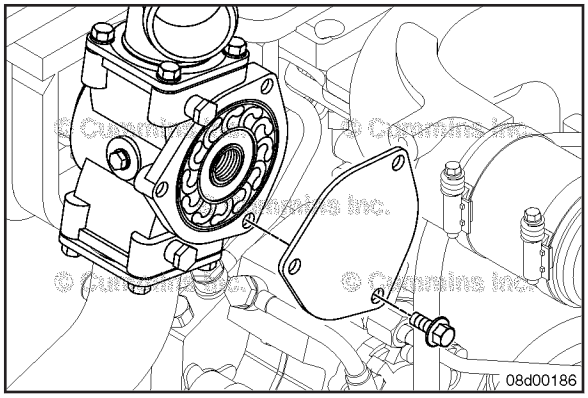

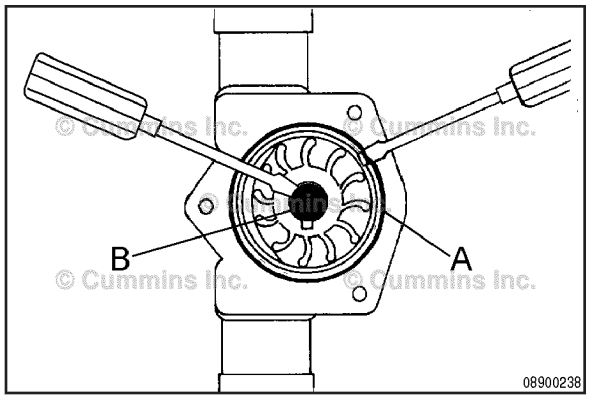

Use a small screwdriver to remove the o-ring (A).

Use a small screwdriver to remove the inner cap (B), if equipped.

Clean the o-ring groove.

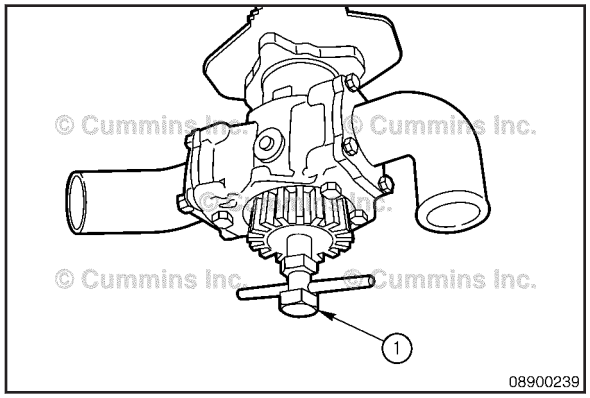

CAUTION

Do not pry against the pump housing to remove the impeller as this can cause damage to the liner.

Be sure to note the direction of impeller vanes for proper installation. Mark the outer surface.

An impeller removal tool is available from Sherwood Pumps, Part Number 23631.

If the impeller is equipped with a threaded insert, use the special tool or a ¾-NFT bolt (1) to insert in the impeller to pull the impeller out.

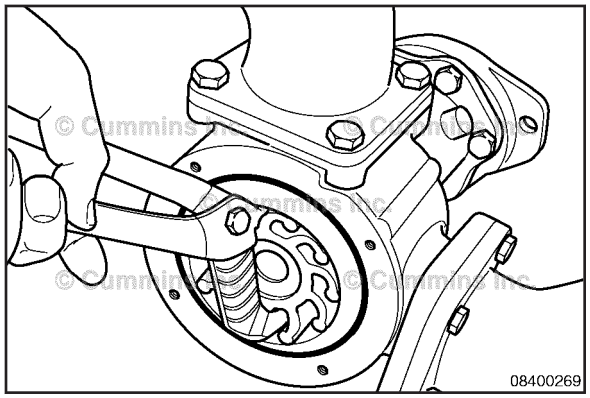

If the impeller does **not** have a threaded bore, grasp the hub of the impeller with pliers and remove the impeller from the impeller bore.

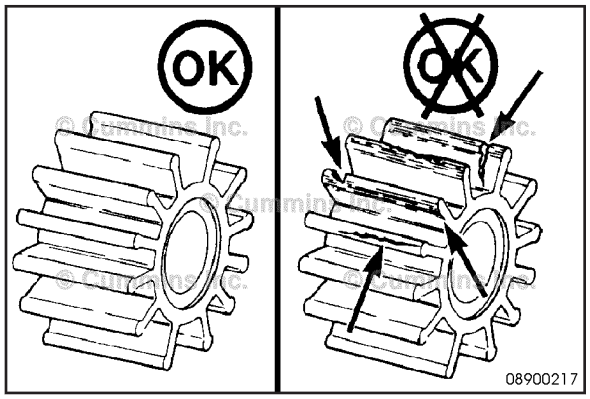

Inspect for damage such as rips, tears, chunks of material missing, or wear on the edges of the vanes.

Replace the impeller if damage is found.

Clean the internal pump surfaces.

Lubricate the housing with silicone or glycerine non-petroleum-based lubricant. Petroleum-based lubricant will damage the rubber impeller.

If non-petroleum-based lubricant is **not** readily available, use soapy water to ease installation.

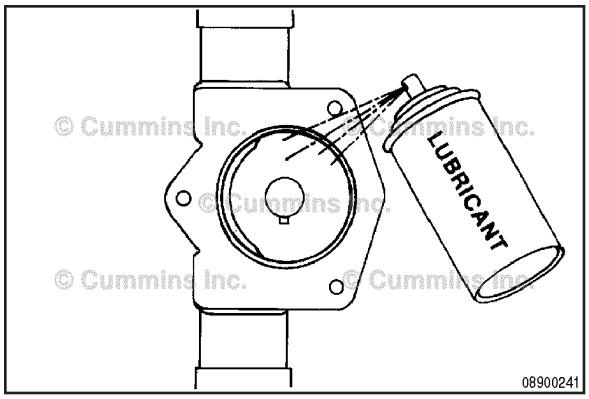

If the impeller is in good condition and will be reused, install it in the same direction from which it was removed. See the mark reference made during removal.

If the impeller was **not** marked and the original rotation or direction can **not** be determined, replace the impeller with a new one.

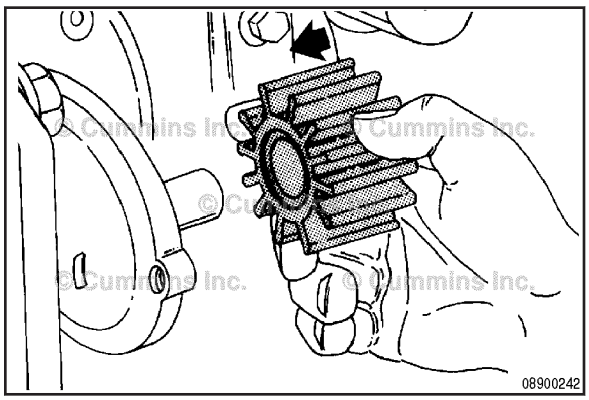

An oil filter strap wrench or plastic wire straps can be used as an installation aid to hold the vanes.

Guide the impeller into the housing, twisting it **counterclockwise** as it is advanced, so that the vanes will be deflected in the proper direction.

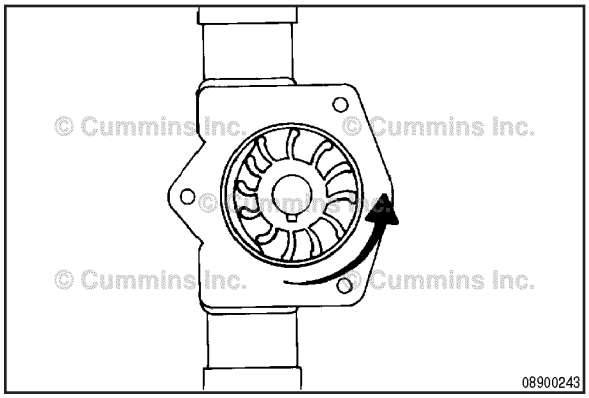

Continue to turn the impeller while pushing it into the housing. The impeller will slide all the way in when the keyway lines up with the key.

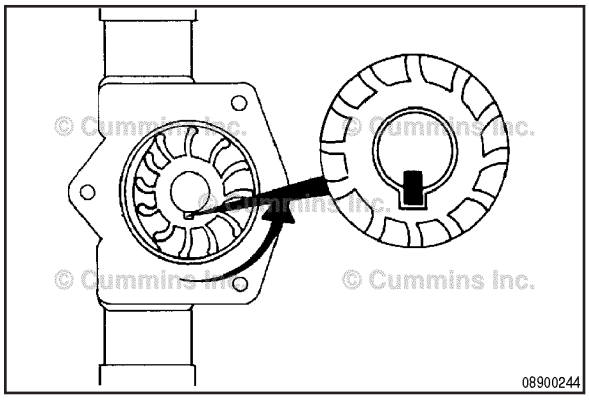

To buy Cummins Parts and Service Manuals, Training Guides, or Tools go to our website at https://store.cummins.com

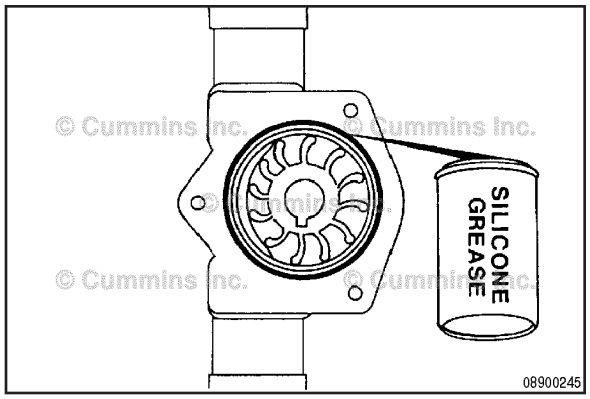

Insert the new o-ring into the impeller housing. Use a light coat of silicone grease to hold the o-ring in place.

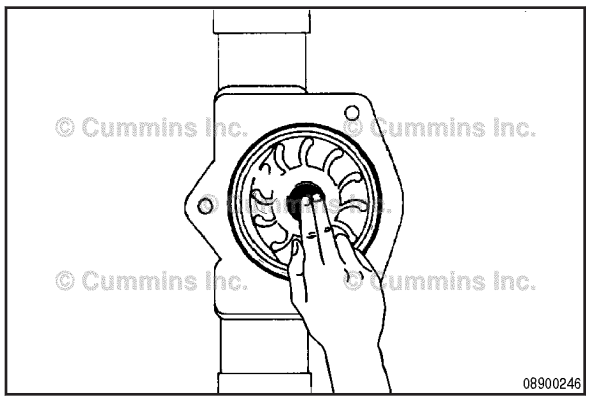

Install the rubber impeller cap into the center hub of the impeller, if equipped.

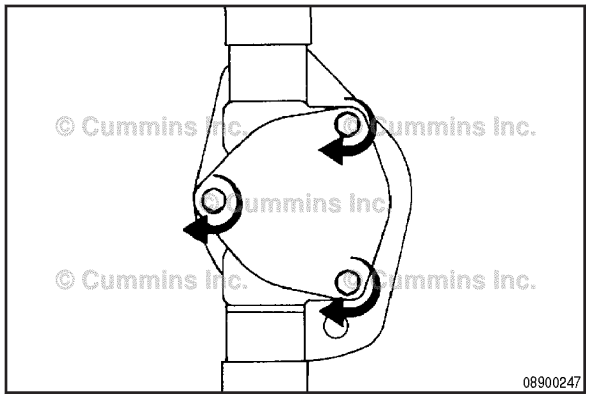

Install the cover plate and capscrews.

Tighten the capscrews.

Torque Value: 24 N•m [212 in-lb]

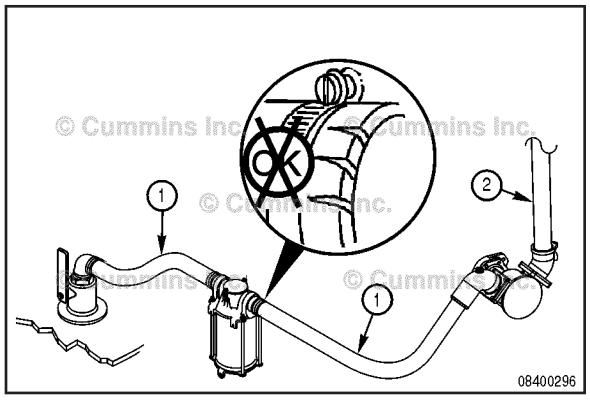

Sea Water Hoses

Inspect

Start engine, and inspect all hoses and connections for deterioration or leaks. Replace damaged hoses and clamps, if necessary.

To buy Cummins Parts and Service Manuals, Training Guides, or Tools go to our website at https://store.cummins.com

Fuel-Water Separator

Remove

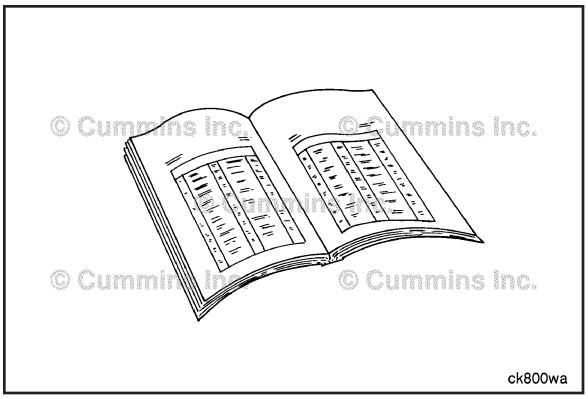

WARNING

Fuel is flammable. Keep all cigarettes, flames, pilot lights, arcing equipment, and switches out of the work area and areas sharing ventilation to reduce the possibility of severe personal injury or death when working on the fuel system.

CAUTION

Use caution when disconnecting or removing fuel lines, replacing filters and priming the fuel system, that fuel is not spilled or drained into the bilge area. Do not drop or throw filter elements into the bilge area. The fuel and fuel filters must be discarded in accordance with local environmental regulations.

Close the fuel supply and return valves. Refer to the OEM service manual.

Remove the T-handle and lid.

Remove the element by slowly pulling upward on the molded handles with a twisting motion.

Remove the gasket from the lid.

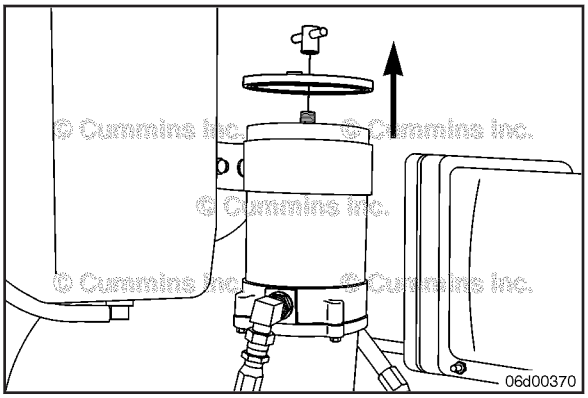

Install

Install the new gasket in the lid. The new gasket is supplied with the new fuel-water separator filter.

Apply a light coating of clean fuel to the gasket surface.

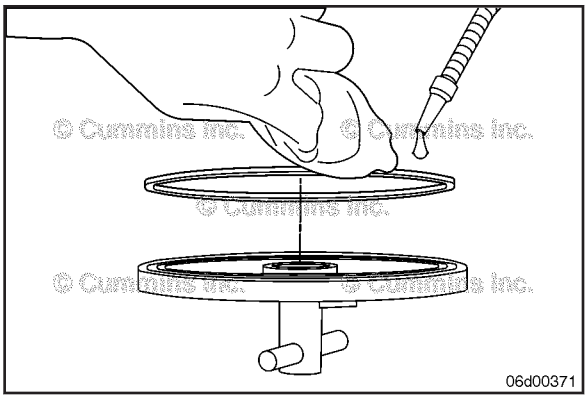

To buy Cummins Parts and Service Manuals, Training Guides, or Tools go to our website at https://store.cummins.com

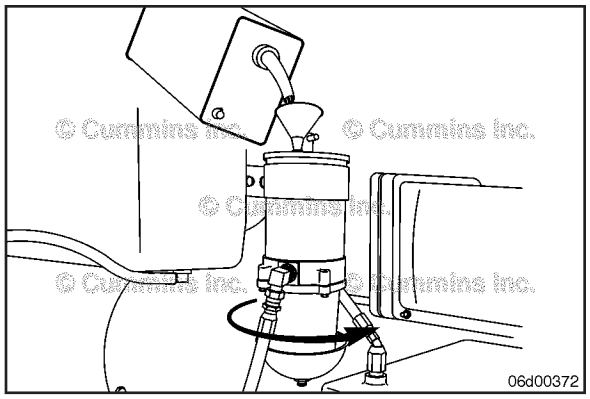

Install the new filter in the unit.

Fill the unit with clean fuel.

Replace the lid and tighten the T-handle, hand-tight **only**.

Open the fuel supply and return valves. Refer to the OEM troubleshooting and repair manual.

Operate the engine and check for leaks.

Fuel Filter (Spin-On Type)

General Information

Cummins® Common Rail Fuel System

The Cummins® Common Rail fuel system requires the use of two fuel filters. The suction-side filter **must** have the following characteristics:

- Water-separating
- 10-micron rating
- Water in fuel sensor with shunt resistor
- Water-drain valve
- **Always** chassis mounted.

Fleetguard® FS1003 meets these requirements.

Racor™ model 1000MA meets these requirements for marine applications.

The pressure-side filter **must** have the following characteristics:

- 3-micron rating
- Engine mounted or chassis mounted.

Fleetguard® FF5488 meets these requirements.

The fuel supply and return valves **must** be closed when servicing the fuel filters on marine applications.

Identify the engine for the correct filters.

Refer to Procedure 100-001 in Section E.

The CM850 (CM2850) engine uses the Cummins® Common Rail fuel system.

To buy Cummins Parts and Service Manuals, Training Guides, or Tools go to our website at https://store.cummins.com

Remove

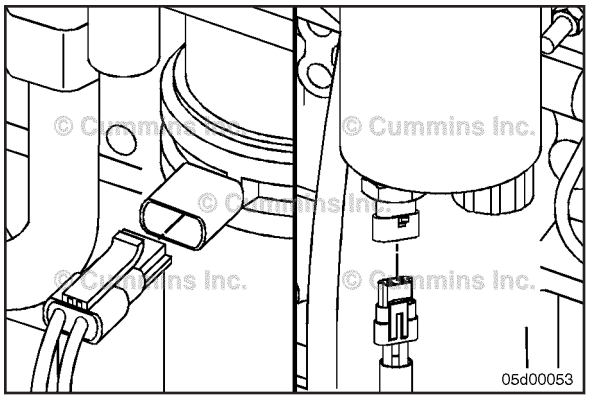

⚠WARNING⚠
Depending on the circumstance, diesel fuel is flammable. When inspecting or performing service or repairs on the fuel system, to reduce the possibility of fire and resulting severe personal injury, death, or property damage, never smoke or allow sparks or flames (such as pilot lights, electrical switches, or welding equipment) in the work area.

Disconnect the wiring harness from the water-in-fuel sensor, if equipped.

Disconnect the wiring harness from the fuel heater, if equipped.

Loosen and remove the fuel filter.

Make sure the seal ring does **not** stick to the filter head.

Remove the ring with an o-ring pick, if necessary.

Install

Cummins® Common Rail Fuel System

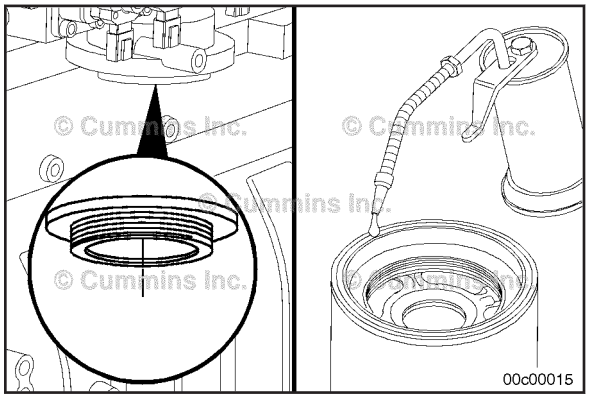

⚠CAUTION⚠
Mechanical overtightening can distort the threads as well as damage the filter element seal or filter canister.

It will be necessary to fill the 10-micron water stripping (suction-side) fuel filter with fuel.

Do **not** fill the 3-micron (pressure-side) fuel filter with fuel before installation; instead, prime the fuel system using the fuel lift pump.

Make sure the center seal ring is installed onto the filter spud.

Install the filter as specified by the filter manufacturer.

Connect the water-in-fuel sensor and the fuel heater, if equipped.

The Cummins® Common Rail fuel system is capable of detecting the presence of the correct water-in-fuel sensor.

If the water-in-fuel sensor is incompatible or disconnected, the engine WARNING lamp will illuminate.

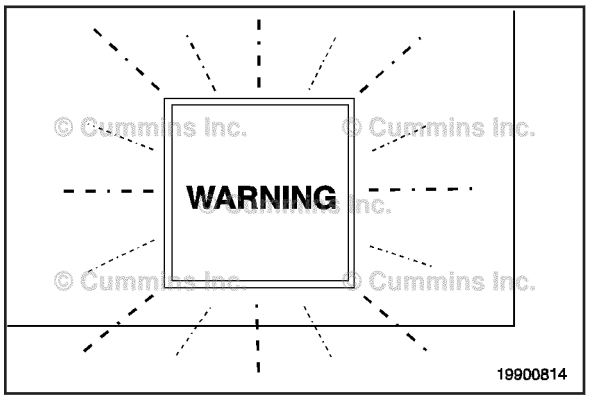

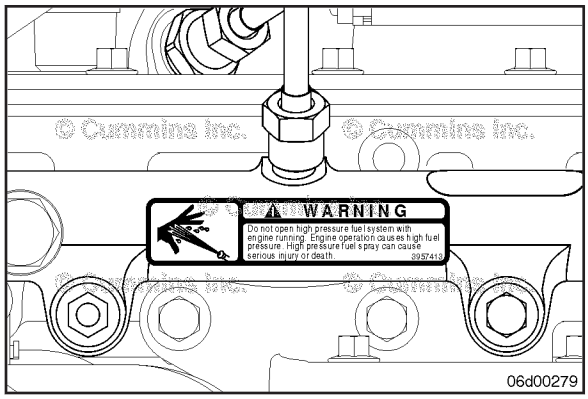

Prime

⚠WARNING⚠
Do not open the high-pressure fuel system with the engine running. Engine operation causes high fuel pressure. High-pressure fuel spray can cause serious injury or death.

Open the fuel supply and return valves, if equipped.

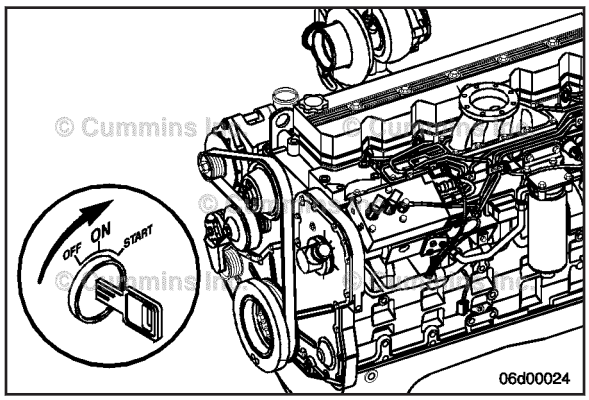

Cycle the keyswitch and allow the lift pump to operate for 30 seconds. Then turn the keyswitch OFF and back ON again, allowing the lift pump to operate again.

Allow the lift pump to operate for three or four 30-second cycles before attempting to start the engine.

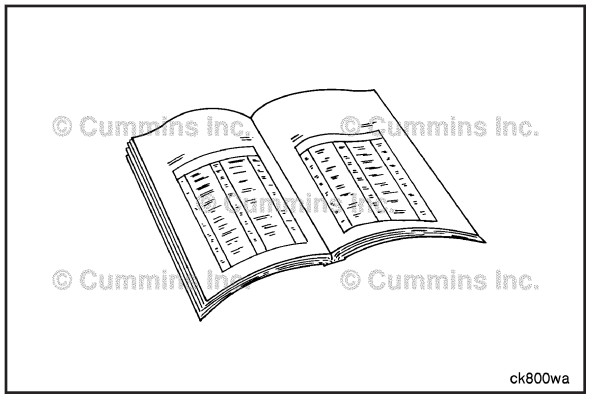

Finishing Steps

- Operate the fuel lift pump to help prime the fuel system. Turn the keyswitch to RUN, but do **not** attempt to start the engine. This will cause the engine control module (ECM) to operate the fuel lift pump through a priming cycle which lasts at least 30 seconds. Cycle the lift pump several times by keying OFF, waiting 10 seconds, and keying ON again.
- Once the engine is started, slowly increase the engine speed while air is purged from the fuel plumbing.

To buy Cummins Parts and Service Manuals, Training Guides, or Tools go to our website at https://store.cummins.com

Supplemental Coolant Additive (SCA) and Antifreeze Concentration

Maintenance Check

Supplemental Coolant Additive (SCA)

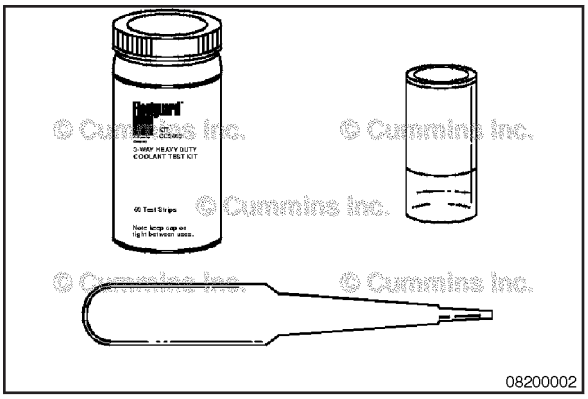

CAUTION

Failing to maintain the required SCA concentration level can cause engine damage.

Check the SCA concentration level

- At least twice a year
- At every subsequent oil drain interval if the concentration is above 3 units
- Whenever coolant is added to the cooling system between filter changes.

Use Fleetguard® coolant test kit, Part No. CC2602, to check the SCA concentration level. Instructions are included with the test kit. Use the Coolant Recommendations and Specifications in Maintenance Specifications (Section V) for the correct SCA and antifreeze level.

Antifreeze

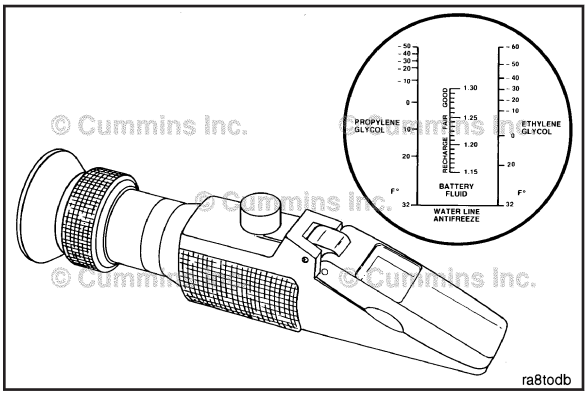

CAUTION

Overconcentration of antifreeze or use of high-silicate antifreeze can damage the engine.

Check the antifreeze concentration. Use a mixture of 50-percent water and 50-percent ethylene glycol or propylene glycol-based antifreeze to protect the engine to -32°C [-26°F] year-around.

The Fleetguard® refractometer, Part Number C2800, provides a reliable, easy-to-read, and accurate measurement of freezing point protection and glycol (antifreeze) concentration.

Antifreeze is essential in every climate.

Antifreeze broadens the operating temperature range by lowering the coolant freezing point and by raising its boiling point.

The corrosion inhibitors also protect the cooling system components from corrosion and prolong component life.

To buy Cummins Parts and Service Manuals, Training Guides, or Tools go to our website at https://store.cummins.com

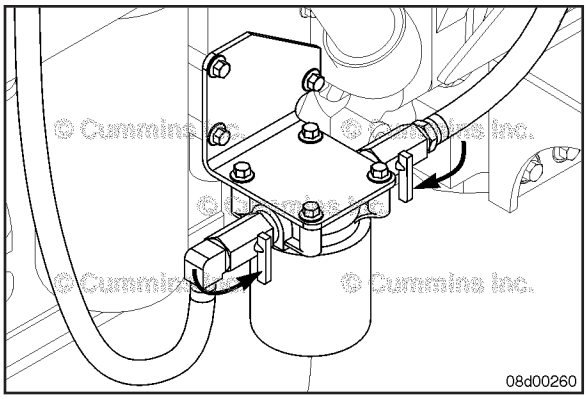

Coolant Filter

Remove

WARNING
Do not remove the pressure cap from a hot engine. Wait until the coolant temperature is below 50°C [120°F] before removing the pressure cap. Heated coolant spray or steam can cause personal injury.

NOTE: It is possible that some marine engine models do **not** have coolant filters.

Remove the coolant system pressure cap.

Turn the inlet and outlet shutoff valves to the OFF position by rotating the knobs from the horizontal to the vertical direction as shown.

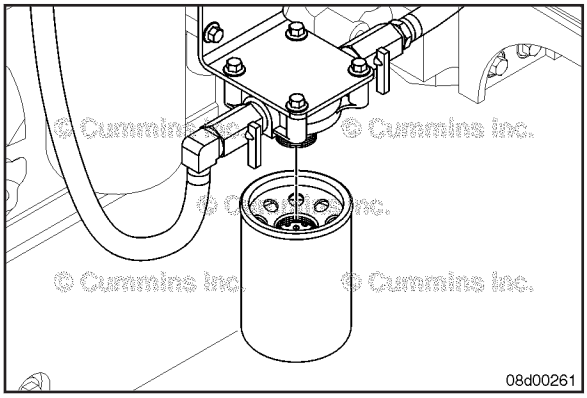

WARNING
A small amount of coolant can leak when servicing the coolant filter with the shutoff valve in the OFF position. To reduce the possibility of personal injury, avoid contact with hot coolant.

WARNING
Coolant is toxic. Keep away from children and pets. If not reused, dispose of in accordance with local environmental regulations.

CAUTION
Use caution when draining coolant that coolant is not spilled or drained into the bilge area. Do not pump the coolant overboard. If the coolant is not reused, it must be discarded in accordance with local environmental regulations.

Remove and discard the coolant filter.

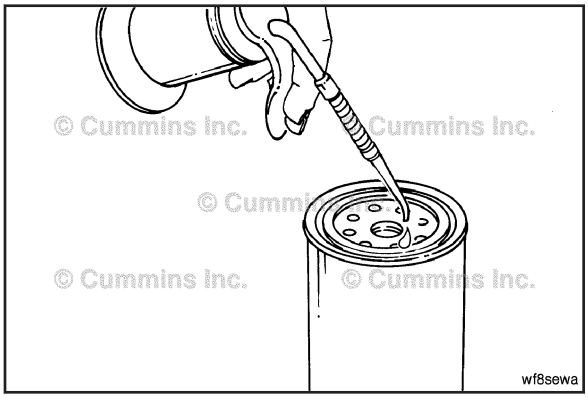

Install

CAUTION
Do not allow oil to get into the filter. Oil will damage the DCA.

CAUTION
Mechanical over tightening can distort the threads or damage the filter head.

Apply a thin film of lubricating oil to the gasket sealing surface before installing the new coolant filter.

Install the coolant filter on the filter head. Tighten the filter until the gasket contacts the filter head surface.

Tighten the coolant filter an additional 1/2 to 3/4 of a turn, or as specified by the filter manufacturer.

To buy Cummins Parts and Service Manuals, Training Guides, or Tools go to our website at https://store.cummins.com

CAUTION

The valve must be in the ON position to prevent engine damage.

Turn the shutoff valves to the ON position by rotating the knobs from the vertical to the horizontal position in the directions shown.

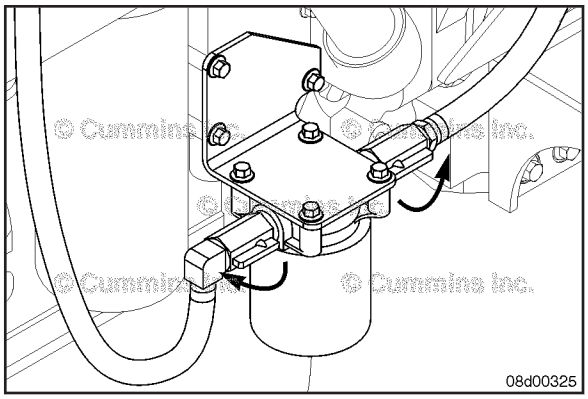

Install the coolant system pressure cap.

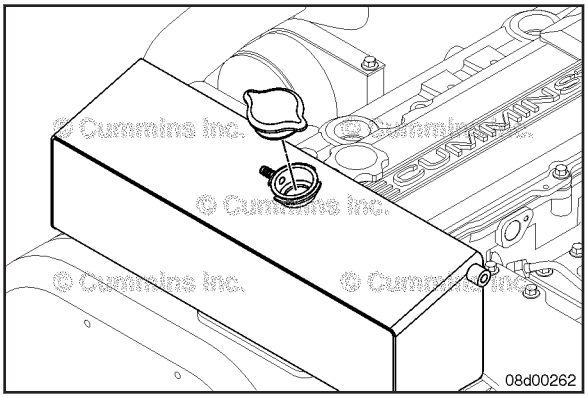

Operate the engine and check for coolant leaks.

After the air has been purged from the system, check the coolant level again.

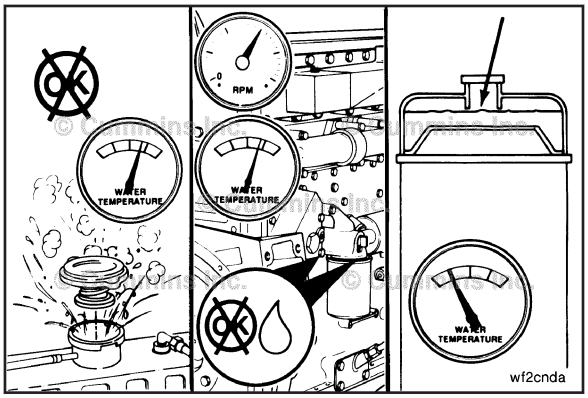

Radiator Pressure Cap

General Information

The system is designed to use a pressure cap to prevent boiling of the coolant.

Radiator Cap Pressure Test	
System Temperature	**Cap (Pressure Rating)**
104°C [220°F]	103 kPa [15 psi]

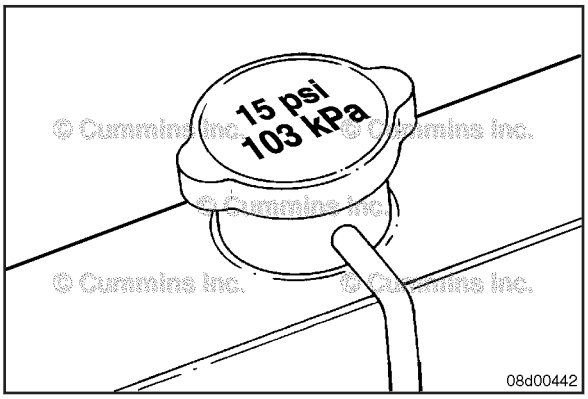

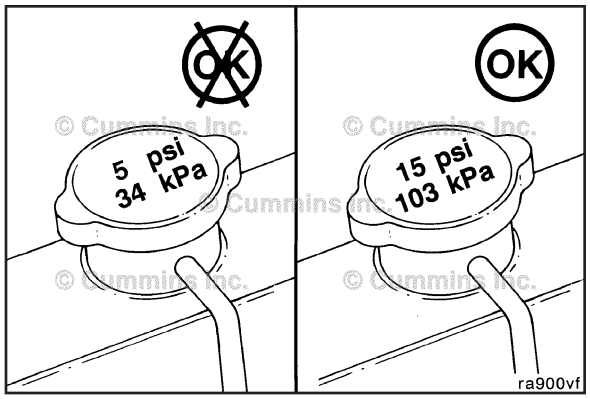

An incorrect or malfunctioning cap can result in the loss of coolant and the engine running hot.

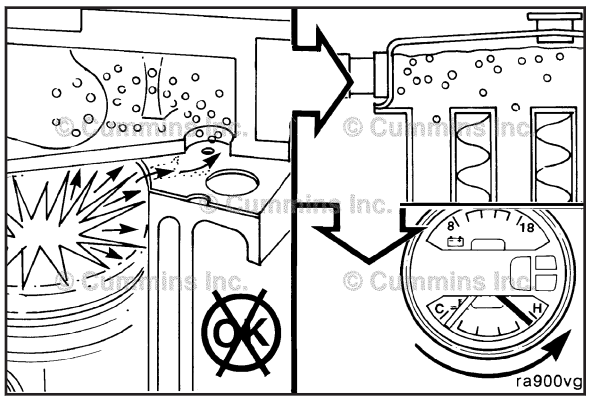

Air in the coolant can result in loss of coolant from the overflow when the aerated coolant is hot. The heated air expands, increasing the pressure in the system, causing the cap to open.

Similarly, coolant can be displaced through the overflow if the head gasket leaks compression gases into the cooling system.

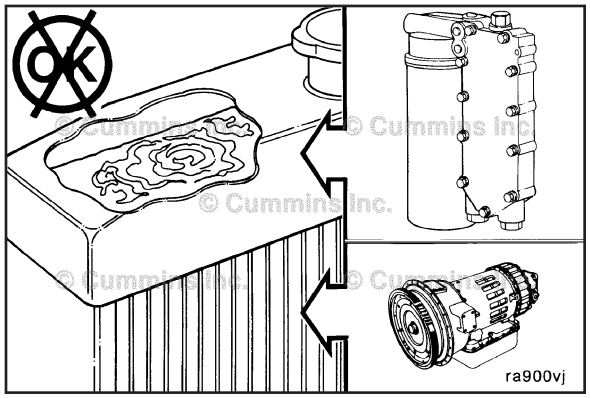

NOTE: Transmission fluid can also leak into the coolant through radiator bottom tank transmission oil coolers.

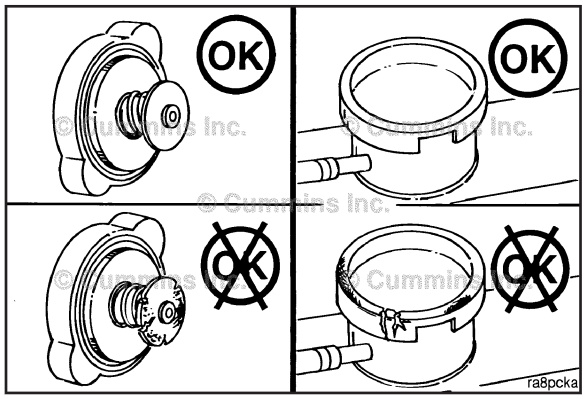

Inspect for Reuse

Make sure the correct radiator cap is being used. Reference the equipment manufacturer service information for inspection criteria.

Inspect the rubber seal of the pressure cap for damage.

Inspect the radiator fill neck for cracks or other damage.

Reference the equipment manufacturer service information for instructions if the fill neck is damaged.

To buy Cummins Parts and Service Manuals, Training Guides, or Tools go to our website at https://store.cummins.com

Pressure-test the radiator cap.

The pressure cap **must** seal within 14 kPa [2 psi] of the value stated on the cap, or it **must** be replaced.

Reference the equipment manufacturer service information for the radiator cap test procedure.

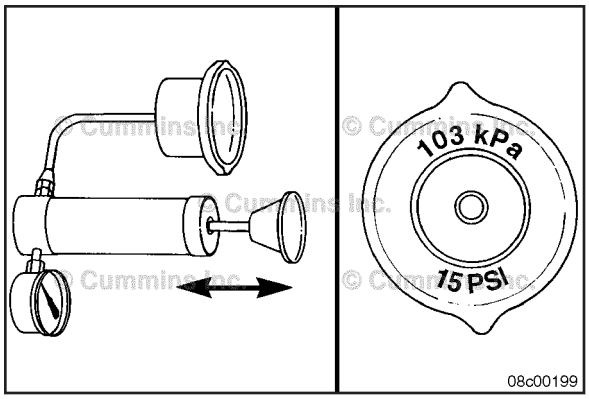

Air Cleaner Assembly (Engine-Mounted)

General Information

Some marine engines are equipped with a factory installed closed crankcase breather system which is connected to the engine intake air cleaner. Aftermarket (non-factory installed) closed crankcase breather systems can **not** be installed on Cummins marine engines. Installing such non-factory devices will void the warranty.

The closed crankcase system has three major parts.

1. The air cleaner assembly filters the incoming air and a oil blow-by filter element called a coalescing filter.
2. Vacuum brake assembly; this keeps the engine from drawing oil directly into the turbocharger if the air cleaner is plugged.
3. Closed crankcase drain plumbing; this includes the drain hoses and check valve. The check valve prevents crankcase gasses from flowing backward in the air cleaner.

Remove

CAUTION

Use caution when disconnecting or removing oil lines, or replacing filters that oil is not drained into the bilge area. Do not drop or throw filter elements into the bilge area. The oil and filters must be discarded in accordance with local environmental regulations.

Release the clamp and remove the air cleaner element.

Remove the turbocharger silencer cone from inside the filter element.

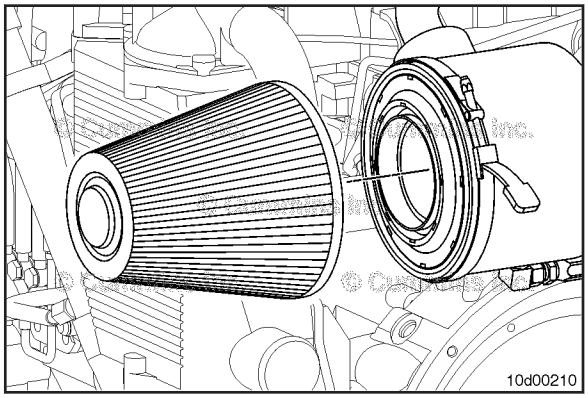

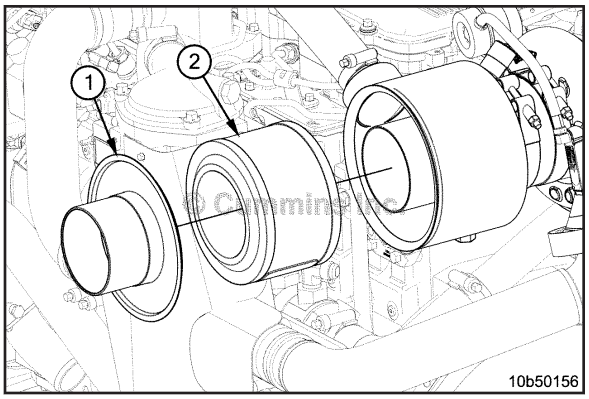

Remove coalescing filter cover plate (1).

Pull out coalescing filter using its wire bail (2).

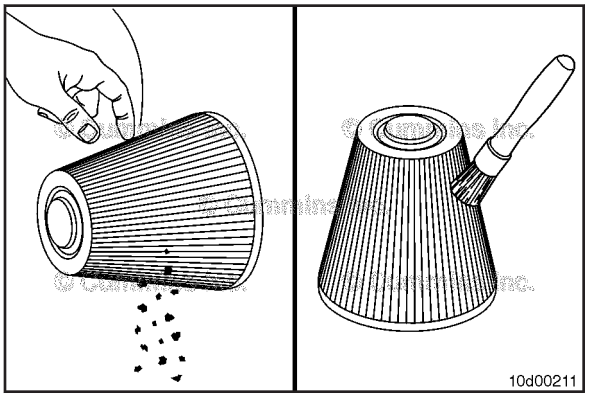

Clean

NOTE: It is possible that a filter which is damaged or clogged with soot, due to an exhaust leak, will **not** be able to be cleaned to maximum efficiency. Replacement of the element will be necessary.

Tap the filter element to dislodge any large embedded particles or dirt.

Gently brush the filter element with a soft bristle brush.

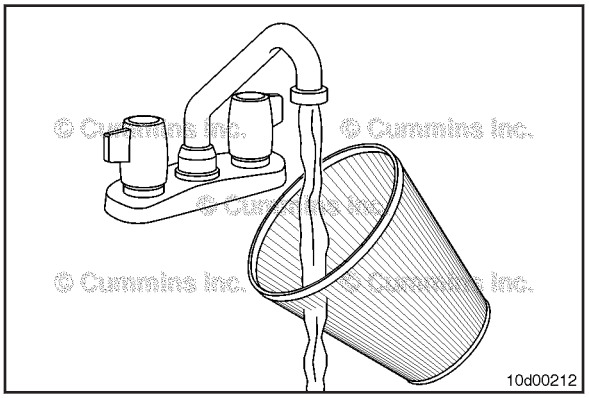

CAUTION
To avoid damage to the components, do not use gasoline, high-pressure water or air, caustic cleaning solutions, or parts-cleaning solvents to clean the air filter.

CAUTION
To avoid damage to the components, do not use compressed air, an open flame or heat dryers to dry the air filter.

NOTE: Always flush from the clean side to the dirty side. This will remove the particles and dirt, and **not** drive it into the air filter.

Rinse the air filter element with low pressure water. Tap water is okay.

After rinsing the air filter, shake off all the excess water and let the filter element air dry.

To buy Cummins Parts and Service Manuals, Training Guides, or Tools go to our website at https://store.cummins.com

NOTE: Do **not** use automatic transmission fluid, motor oil, diesel fuel, WD-40® lubricant, or any other light weight oil. Use approved filter oil.

After cleaning the air filter, **always** re-oil the filter element with oil service kit, Part Number 3973523. The effectiveness of the air filter is greatly reduced if it is used without oiling. Sparingly squeeze small amounts of oil out of a bottle across the top of each pleat.

Let the oil wick into the filter element for 20 minutes. Then oil any dry areas that are showing.

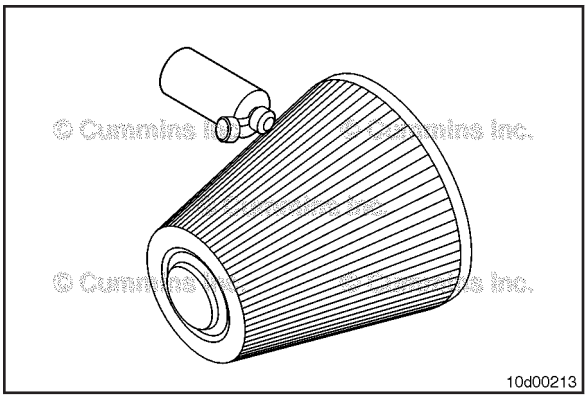

Install

CAUTION
If the square opening is not facing downward, oil will leak out of the air cleaner.

Install the new coalescing filter with the square filter opening (1) facing downward.

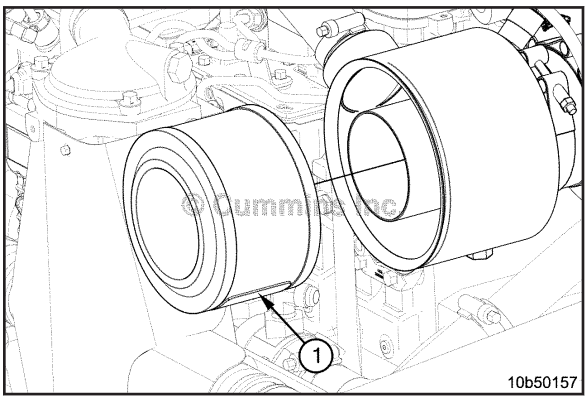

Install the turbocharger silencer cone.

Install the o-ring around the outside of the filter base.

Install the filter onto the engine and secure with the clamp.

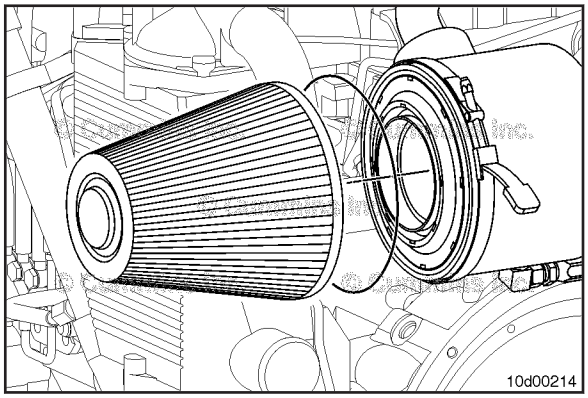

Air Intake Piping

Select Service Tools

Recommended Cummins® Service Tools

- No Cummins® service tools required.

Additional Service Items

- No additional service items required.

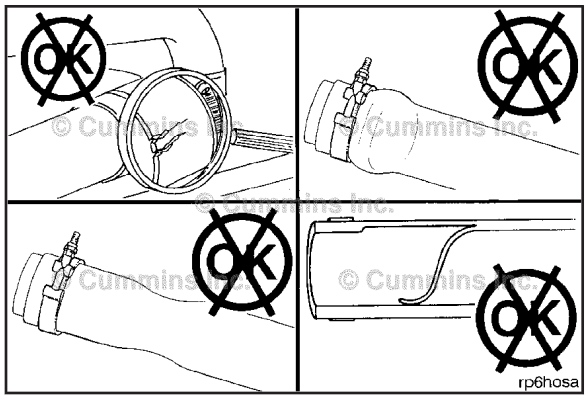

Maintenance Check

Inspect the intake piping daily for wear points and damage to piping, loose clamps, and punctures that can damage the engine.

Replace damaged pipes and tighten loose clamps, as necessary, to prevent the air system from leaking.

Torque Value: 8 N•m [71 in-lb]

Check for corrosion under the clamps and hoses of the intake system piping. Corrosion can allow corrosive products and dirt to enter the intake system. Disassemble and clean, as required.

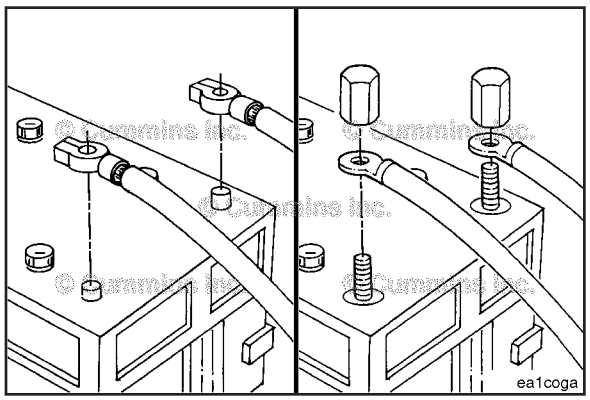

Batteries

General Information

⚠WARNING⚠
Batteries can emit explosive gas. To reduce the possibility of personal injury, always ventilate the compartment before servicing the batteries. To reduce the possibility of arcing, remove the battery (-) negative cable first and attach the battery negative cable last.

There are many types of batteries with varying technology. Common battery types include:

- Standard lead acid (also called flooded or wet cell)
- Starting
- Deep cycle
- Serviceable or maintenance free
- Maintenance free absorbent glass mat (AGM)
- Maintenance free gel cell

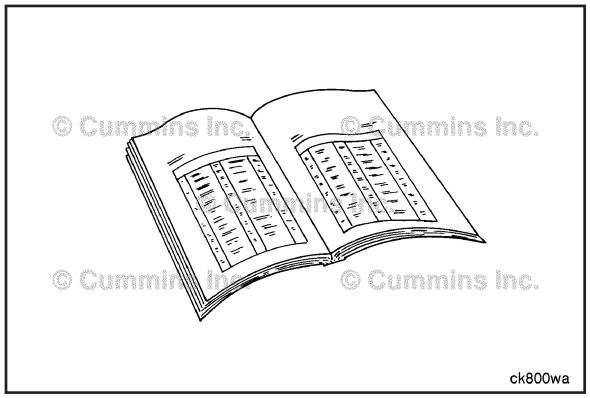

Check Original Equipment Manufacturer (OEM) or battery supplier service literature for battery removal and installation, maintenance, inspection, and testing requirements.

To buy Cummins Parts and Service Manuals, Training Guides, or Tools go to our website at https://store.cummins.com

Battery Cables and Connections

Initial Check

There are two possible heavy-duty battery connections:

- Battery terminal and clamp (1)
- Threaded battery terminal and nut (2).

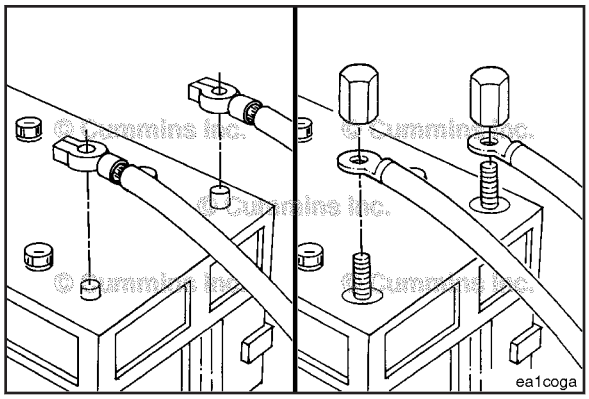

⚠WARNING⚠
Batteries can emit explosive gases. To reduce the possibility of personal injury, always ventilate the compartment before servicing the batteries. To reduce the possibility of arcing, remove the negative (-) battery cable first and attach the negative (-) battery cable last.

Remove and inspect the battery cables and connections for cracks or corrosion.

Replace broken terminals, connectors, or cables.

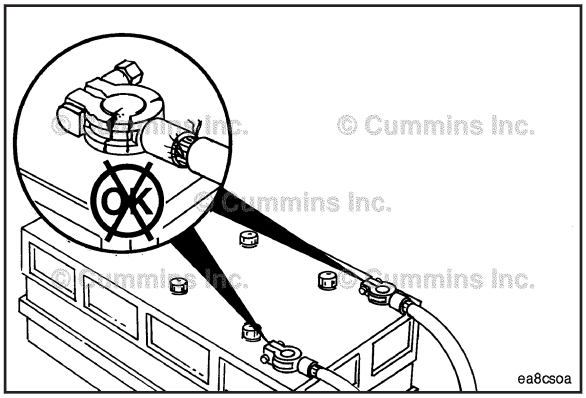

If the connections are corroded, use a battery brush or wire brush to clean the connections until shiny.

Make sure all debris is removed from the connecting surfaces.

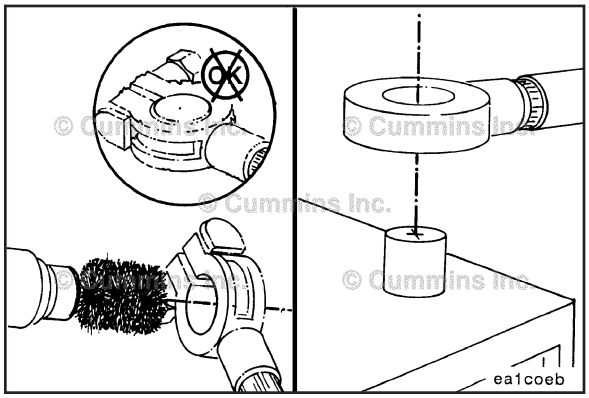

⚠WARNING⚠
Batteries can emit explosive gases. To reduce the possibility of personal injury, always ventilate the compartment before servicing the batteries. To reduce the possibility of arcing, remove the negative (-) battery cable first and attach the negative (-) battery cable last.

Install the cables and tighten the battery connections.

Coat the terminals with grease to prevent corrosion.

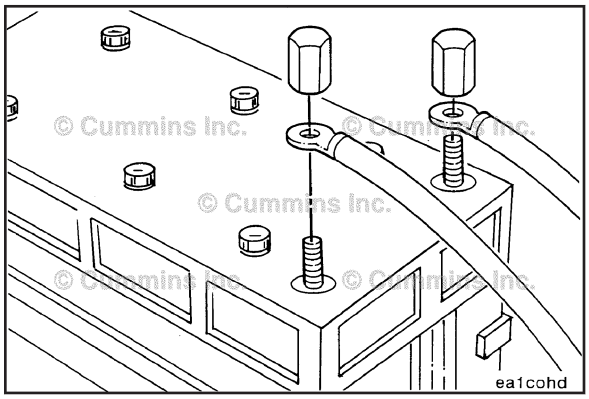

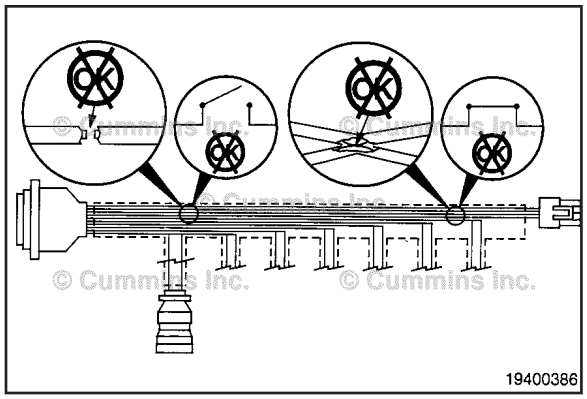

Engine Wiring Harness

Maintenance Check

WARNING

Never touch any wiring connection when the keyswitch is in the ON position. An electrical shock or personal injury can result.

Inspect all wiring connections and wiring harnesses for damage. Faulty wiring can cause improper engine operation and poor performance.

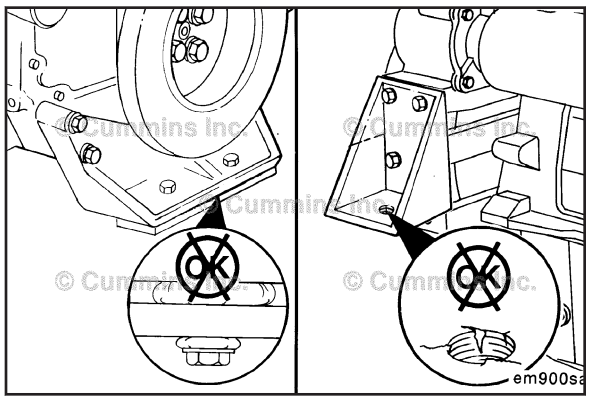

Engine Mounting Bolts

Inspect for Reuse

CAUTION

Damaged engine mounts and brackets can cause engine misalignment. Drive line component damage will possibly result in vibration complaints.

Inspect all rubber-cushioned mounts for cracks or other damage.

Inspect all mounting brackets for cracks or damaged bolt holes.

Check the torque on the engine-mounting nuts and bolts. Tighten any that are loose. Refer to the OEM service manual for torque specifications.

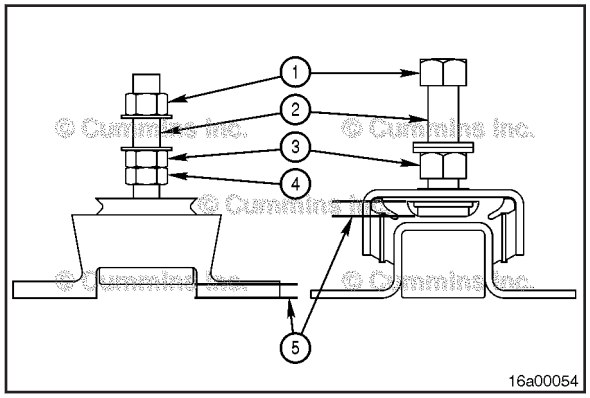

Marine Vibration Isolator

General Information

This illustration shows the different types of marine isolators, and the location of the snubber and corresponding gap used to determine loading of the isolator.

1 Top nut
2 Leveling stud
3 Adjusting nut
4 Jam nut
5 Snubber gap.

Generally, it is recommended to replace isolators as a set, but the age of the isolators and the conditions that caused the damage need to be reviewed.

Isolators of different designs should **not** be mixed in the same installation.

Initial Check

NOTE: This Initial Check is scheduled to be performed at the Maintenance Procedures at 500 Hours or 1 Year interval.

Check that the rubber portion of the isolator is **not** cracked, damaged, or pushed out from the isolator housing.

If the rubber is damaged, the isolator will need to be replaced.

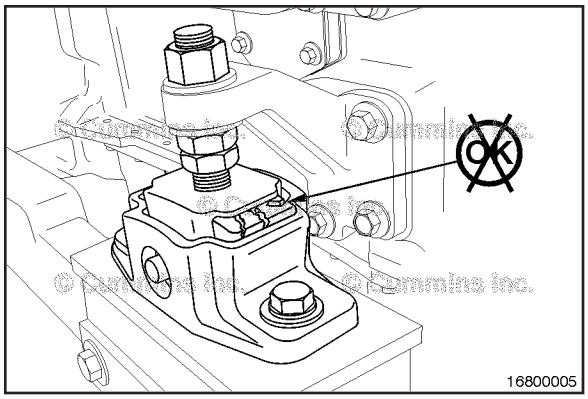

Check that the isolator is **not** fully compressed. If an isolator is in the fully compressed condition, there will be no clearance in the snubber gap.

If **only** one isolator is compressed, the loading of the isolators may be unbalanced. Refer to Procedure 016-026 in Section A for steps to balance the load. If the isolator is still compressed after adjusting the load, the isolator will need to be replaced.

If two isolators that are diagonally across from each other are significantly more compressed or fully compressed, then the loading on the isolators is unbalanced. Refer to Procedure 016-026 in Section A for steps to balance the load.

If two isolators that are both on one side of the engine or both at the front or rear of the engine are fully compressed, the isolators will need to be replaced.

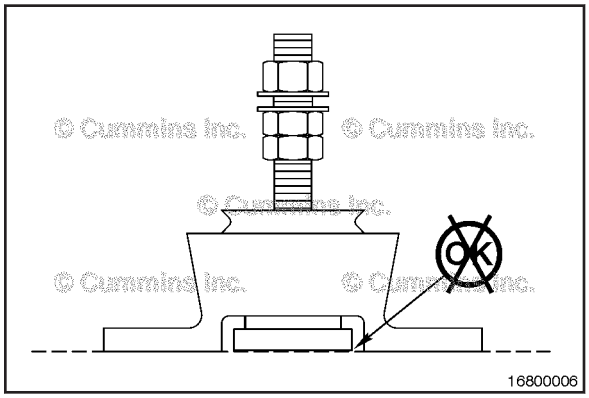

Check that the metal parts of the isolator are **not** damaged, cracked, bent, or warped. If they are, the isolator will need to be replaced.

Check for excessive corrosion. If corrosion is enough to weaken the structure or impede the function of the isolator, it will need to be replaced.

If an isolator is damaged or worn and less than one year old, check that the isolator part number is correct for the engine.

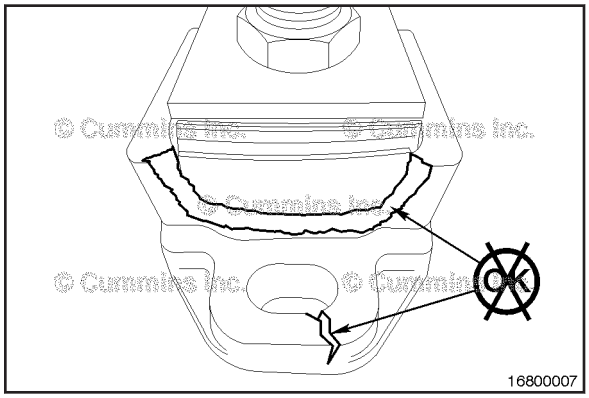

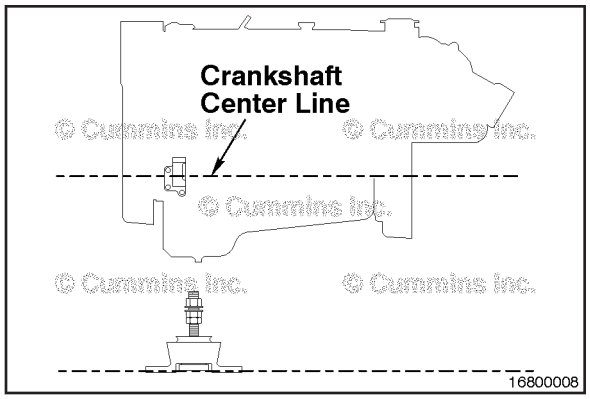

Check that the isolator mounting base is parallel with the engine crankshaft centerline and that the stud is perpendicular to the base, when looking from the side of the engine. The oil pan flange can be used as a visual reference. The engine support brackets **must** also be parallel.

The alignment of the isolator base to the crank centerline should be within four degrees of parallel.

The alignment of the isolator stud to the base should be within four degrees of perpendicular.

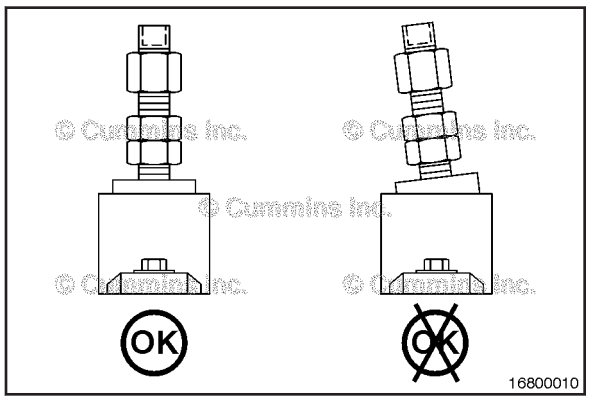

Check that the isolator mounting base is parallel to the transverse crankshaft centerline and that the stud is perpendicular to the base when looking from the front or back of the engine. The engine support brackets **must** also be parallel.

The alignment of the isolator base to the transverse crankshaft centerline should be within two degrees of parallel.

The alignment of the isolator stud to the base should be within two degrees of perpendicular.

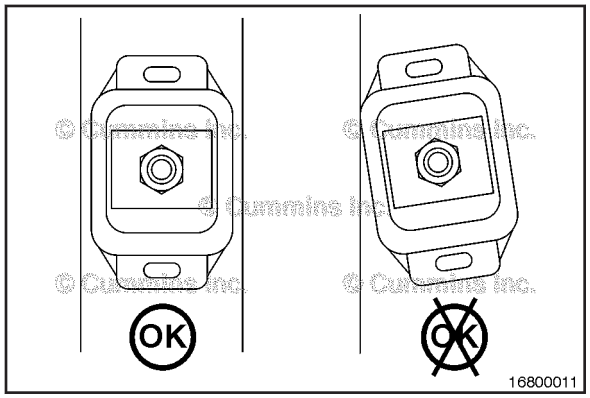

Check that the isolator mounting base is parallel to the crankshaft centerline when looking from the top of the engine.

The alignment of the isolator base to the crankshaft centerline should be within two degrees of parallel.

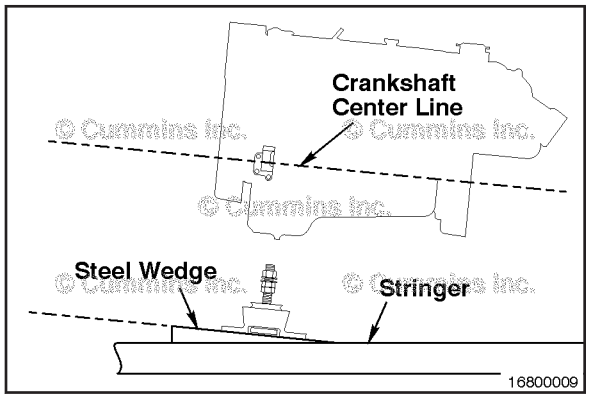

If the isolator is out of alignment, the mounting will need to be adjusted. Wedges can be used to shim the base to achieve proper alignment. Shims **must** be made of a solid material that will **not** compress under the weight of the engine.

To buy Cummins Parts and Service Manuals, Training Guides, or Tools go to our website at https://store.cummins.com

Preparatory Steps

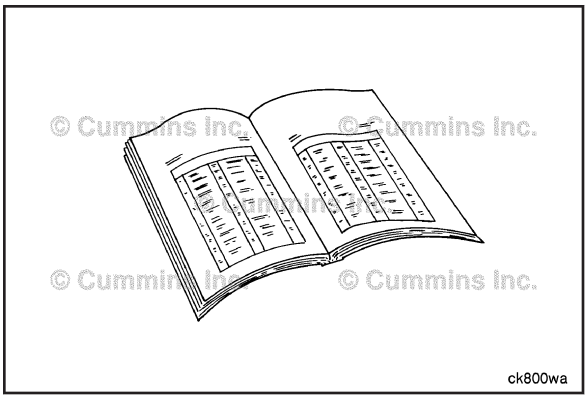

⚠WARNING⚠
Batteries can emit explosive gases. To reduce the possibility of personal injury, always ventilate the compartment before servicing the batteries. To reduce the possibility of arcing, remove the negative (-) battery cable first and attach the negative (-) battery cable last.

- Disconnect the battery. Refer to the original equipment manufacturer (OEM) service manual.
- Disconnect the propeller shaft. Disengage the flange. Refer to Procedure 016-025 in Section A.

Remove

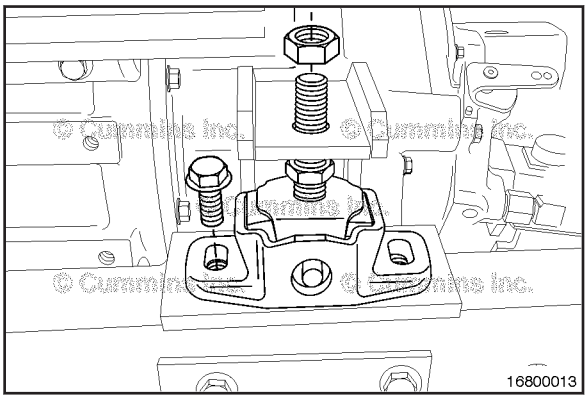

⚠WARNING⚠
This component or assembly weighs greater than 23 kg [50 lb]. To prevent serious personal injury, be sure to have assistance or use appropriate lifting equipment to lift this component or assembly.

The engine needs to be supported before removing the isolators. The amount of space available will determine the best method for this support.

Remove the top nut from the isolator's adjusting stud. Remove the bolts or capscrews retaining the isolator base.

Raise the engine if necessary to facilitate the removal of the isolator.

Make sure that any equipment used for hoisting of jacking the engine is capable of handling the weight of the engine and marine gear. Any engine component used for attaching or support such as the lifting brackets or engine supports **must** be correct for the engine. Reference the appropriate manual for General Engine information in Section V for the engine weight.

Remove the isolator.

If reusing the isolator, mark the position of the isolator relative to the engine to make sure of installation in the same location.

If replacing the worn or damaged isolator with a new isolator, measure the height of the adjusting nut on the stud to assist in setting the new isolator adjusting nut height.

To buy Cummins Parts and Service Manuals, Training Guides, or Tools go to our website at https://store.cummins.com

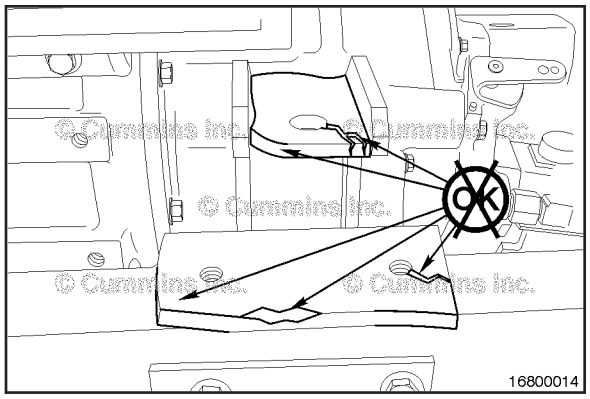

Inspect for Reuse

Inspect the vessel stringers or engine bed to make sure they have **not** been damaged and that they can continue to support the weight of the engine. This is especially true of stringers constructed of wood, wood core, or hollow fiberglass.

Inspect the mounting holes in the stringers or the engine bed for damage. If the stringers, engine bed, or mounting holes need to be repaired, contact an OEM qualified repair location.

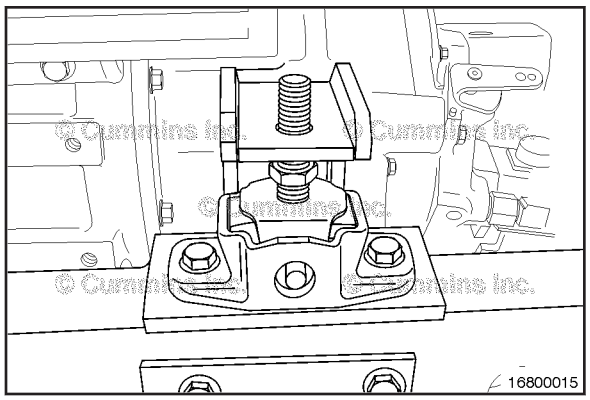

Install

Set the new isolator in place. Check that the isolator is properly aligned. Reference the Initial Check section in this procedure for alignment information.

Set the adjusting nut at the approximate height of the isolator removed.

Replace other isolators that need to be changed using the same technique.

Install the washer and top nut.

Lower the engine so that its weight is fully supported by the isolators.

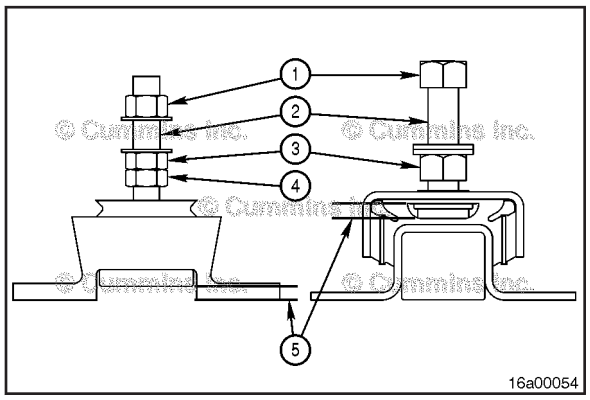

Verify that the isolators are loaded evenly. Depending on the configuration of the engine, the weight may **not** be evenly distributed on all four corners.

The engine will be heavier at either the front or back, depending the on configuration. Therefore, the isolators on the heavier end will be compressed more.

Check the snubber gap on all isolators.

If **only** one isolator or two isolators that are diagonally across from each other are significantly more compressed, the loading on the isolators is unbalanced.

Adjust the loading on the isolators by raising or lowering the adjusting nut on the stud. Raising the adjusting nut will increase the load. Lowering the adjusting nut will decrease the load.

The engine should be lifted and the load removed from the isolator before moving the adjusting nut, to prevent damage to the threads.

To buy Cummins Parts and Service Manuals, Training Guides, or Tools go to our website at https://store.cummins.com

Finishing Steps

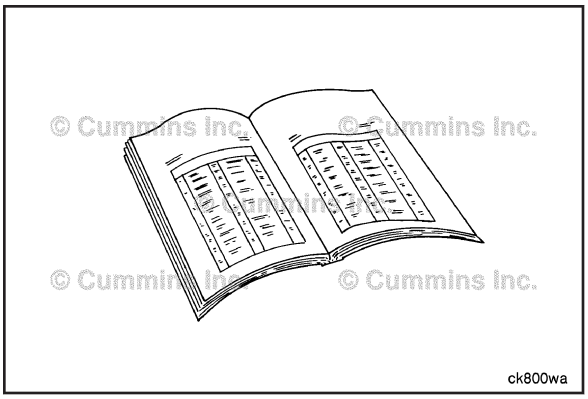

⚠WARNING⚠
Batteries can emit explosive gases. To reduce the possibility of personal injury, always ventilate the compartment before servicing the batteries. To reduce the possibility of arcing, remove the negative (-) battery cable first and attach the negative (-) battery cable last.

- Align the propeller shaft. Refer to Procedure 016-025 in Section A.
- Connect the battery cables. Refer to the OEM service manual.
- Start the engine and check for proper operation.

Heat Exchanger

Flush

Close the sea water valve on the vessel hull.

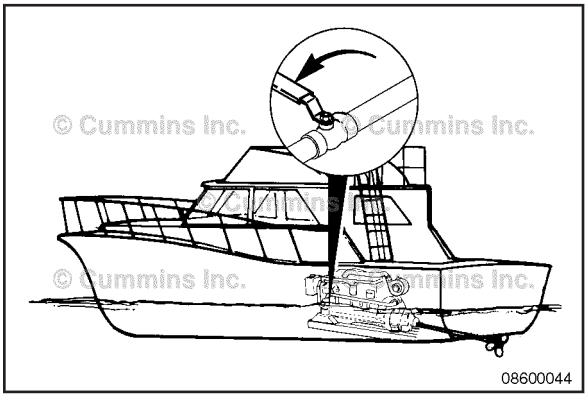

See the following procedure to flush the marine gear oil cooler. Refer to Procedure 008-041 in Section 8.

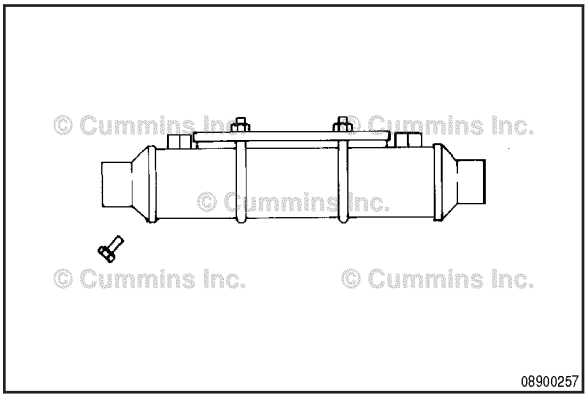

Remove the zinc plugs from the heat exchanger.

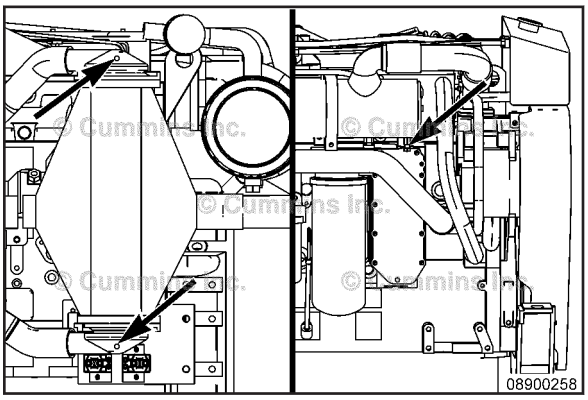

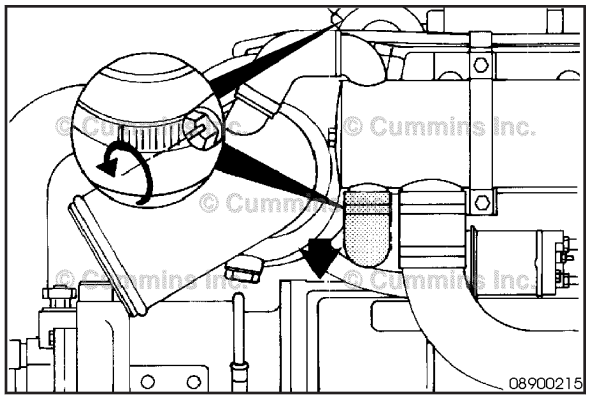

Typical hose connections are shown.

Refer to Procedure 100-002 in Section E.

Disconnect the sea water inlet and outlet connection from the heat exchanger.

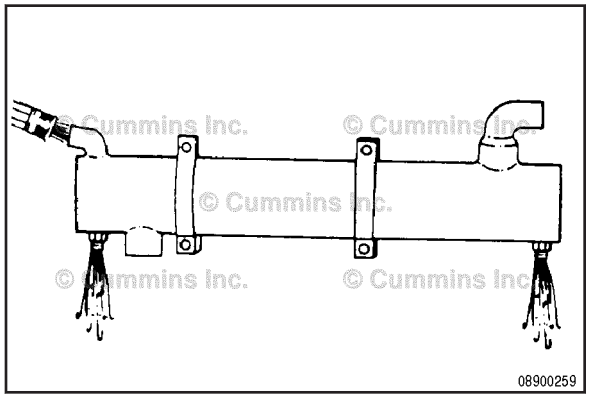

Use clean, low-pressure water to backflush the heat exchanger.

Connect the hose to the heat exchanger sea water outlet to allow the water to backflush the system. This will remove and flush away any loose debris. Make sure the end cavities are cleared of all debris.

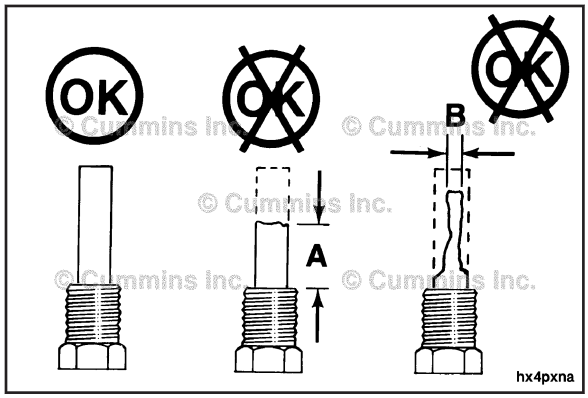

Inspect each plug. If either plug has eroded over 50 percent, it **must** be replaced.

Erosion Limits	New
A = Approximately 19 mm [0.75 in]	51 mm [2 in]
B = Approximately 6.4 mm [0.25 in]	16 mm [0.63 in]
-	-

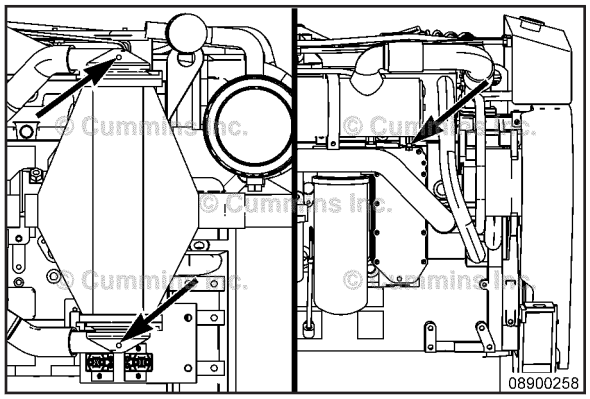

NOTE: Do **not** use thread sealant on the zinc plugs. The plugs **must** be grounded to the component to function properly.

Install the zinc plugs in the heat exchanger. Refer to Procedure 008-059 in Section 8.

Install the sea water inlet and outlet connections.

Torque Value: 5 N•m [44 in-lb]

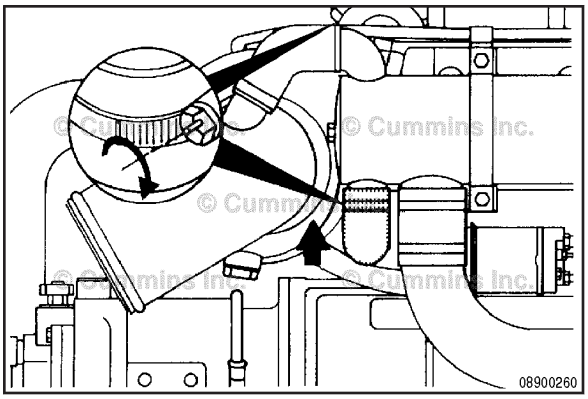

Open the sea water valve on the vessel hull.

Operate the engine. Check for leaks.

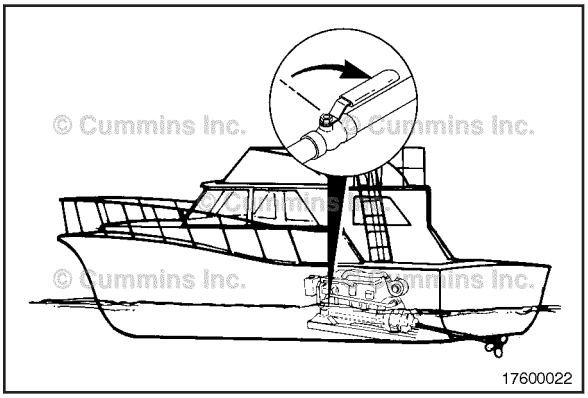

Marine Gear Oil Cooler

Flush

Use the following procedure for QSC8.3 engine. Refer to Procedure 008-129 in Section 8.

Close the sea water inlet valve on the vessel hull, if equipped.

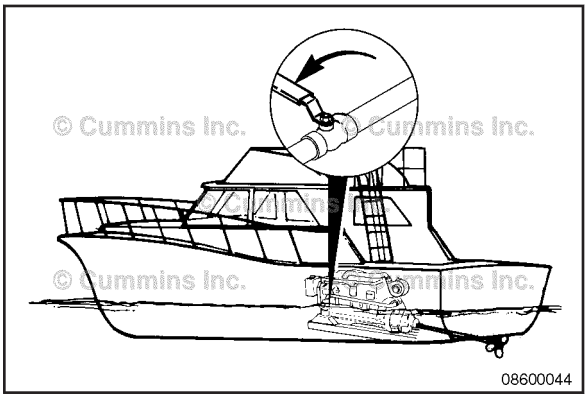

Remove the marine gear oil cooler drain plug and drain the sea water from the gear oil cooler.

Disconnect the sea water inlet and outlet connections.

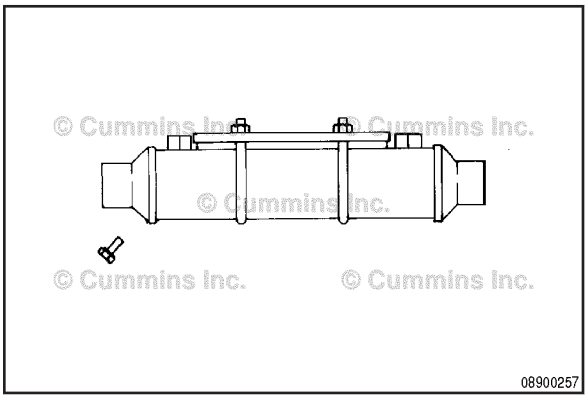

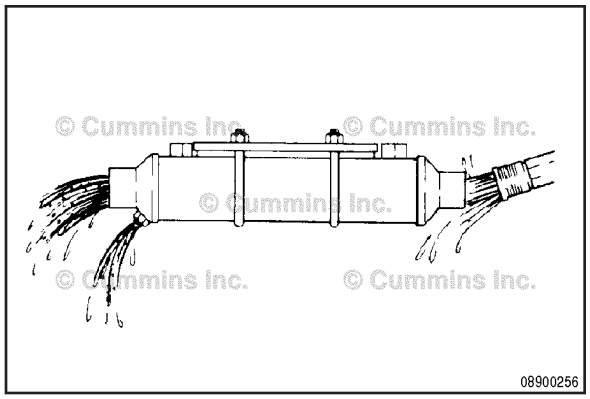

Use clean water to back flush all the debris from the cooler.

Make sure the debris flushed from the cooler does **not** enter the water supply hoses.

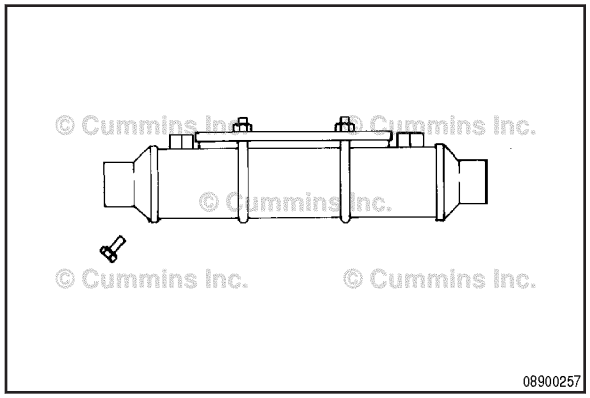

Install the drain plug and sea water hose connections.

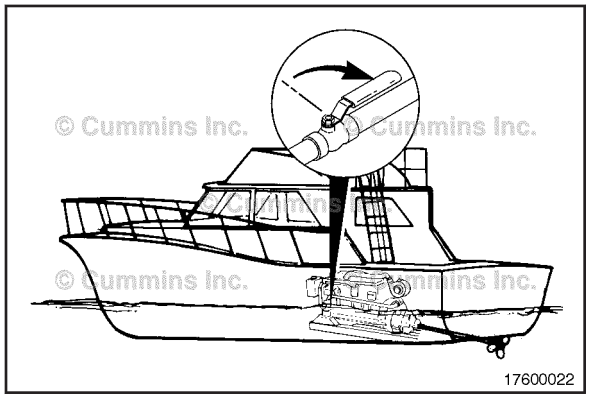

Open the sea water valve on the vessel hull, if closed.

Operate the engine and check for leaks.

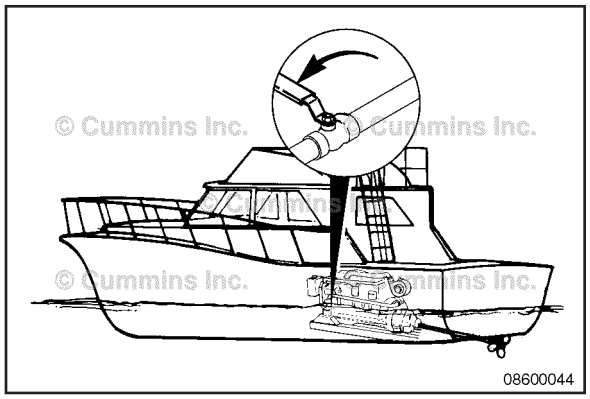

Marine Gear Oil and Fuel Cooler Assembly

Flush

NOTE: This procedure applies to the QSC8.3 engine **only**. For QSL9 engines, refer to Procedure 008-041 (Marine Gear Oil Cooler) in this section.

Close the seawater inlet valve on the vessel hull, if equipped.

Remove the marine gear oil cooler drain plug and drain the sea water from the marine gear oil cooler.

Disconnect the sea water inlet and outlet connections. Refer to Procedure 008-056 (Sea Water Pipe) in Section A.

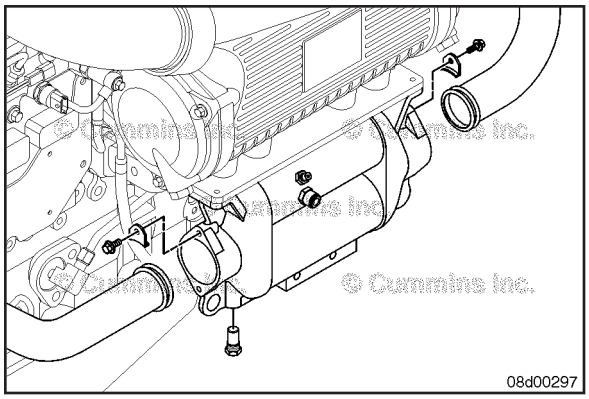

Use clean water to back flush all the debris from the cooler.

Make sure the debris flushed from the cooler does **not** enter the water supply hoses.

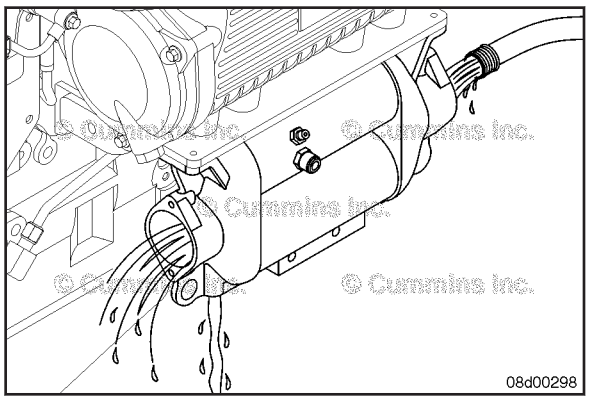

Install the drain plug and seawater hose connections.

Refer to Procedure 008-056 (Sea Water Pipe) in Section A

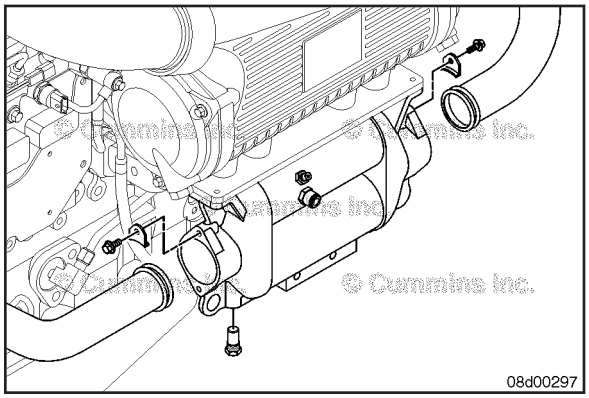

Open the seawater valve on the vessel hull, if equipped.

Operate the engine and check for leaks.

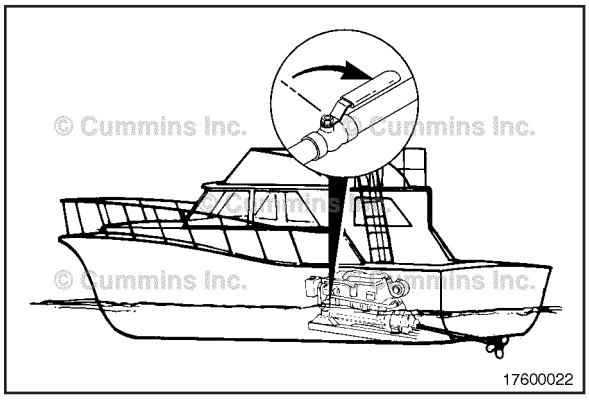

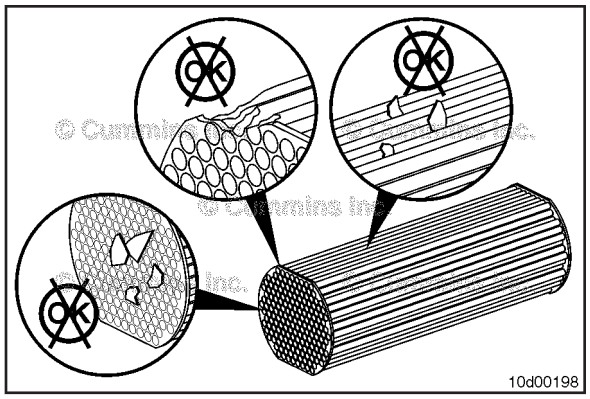

Aftercooler Assembly (Sea Water)

Initial Check

A turbocharger or sea water pump malfunction can cause damage to the aftercooler assembly.

If a turbocharger malfunction or a sea water pump malfunction has occurred, remove the aftercooler element and inspect the element and housing for damage.

Inspect the zinc anodes to make sure they are still in one piece and are **not** broken.

See the Inspect step within this procedure.

Preparatory Steps

QSL Engines

WARNING

Batteries can emit explosive gases. To reduce the possibility of personal injury, always ventilate the compartment before servicing the batteries. To reduce the possibility of arcing, remove the negative (-) battery cable first and attach the negative (-) battery cable last.

WARNING

Depending on the circumstance, diesel fuel is flammable. When inspecting or performing service or repairs on the fuel system, to reduce the possibility of fire and resulting severe personal injury, death, or property damage, never smoke or allow sparks or flames (such as pilot lights, electrical switches, or welding equipment) in the work area.

CAUTION

Use caution when disconnecting or removing fuel lines, replacing filters and priming the fuel system that fuel is not spilled or drained into the bilge area. Do not drop or throw filter elements into the bilge area. The fuel and fuel filters must be discarded in accordance with local environmental regulations.

CAUTION

Zinc plugs expand and can break off during removal. Inspect the zinc plug to make sure it is in one piece. If not, it must be replaced with a new zinc plug, and the broken pieces must be retrieved from the aftercooler to prevent damage to components downstream in the sea water system.

- Close the sea water supply and return valves. See equipment manufacturer service information.
- Close the fuel supply and return valves. See equipment manufacturer service information.
- Disconnect the battery power from the engine. Refer to Procedure 013-009 in Section 4.
- Drain the sea water by removing the zinc anode plug at the bottom of the aftercooler. Refer to Procedure 008-059 in Section 4.
- Loosen the aftercooler top and bottom air connection hose clamps.
- If necessary, remove the aftercooler air discharge connection.
- Disconnect the aftercooler air inlet connection.
- Loosen the hose clamp on the upper water transfer connection and remove the aftercooler sea water discharge hose.

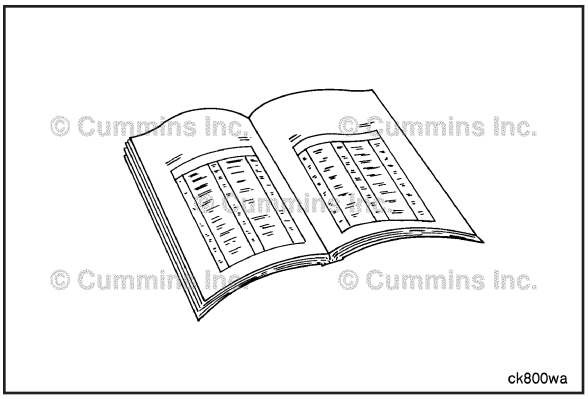

To buy Cummins Parts and Service Manuals, Training Guides, or Tools go to our website at https://store.cummins.com

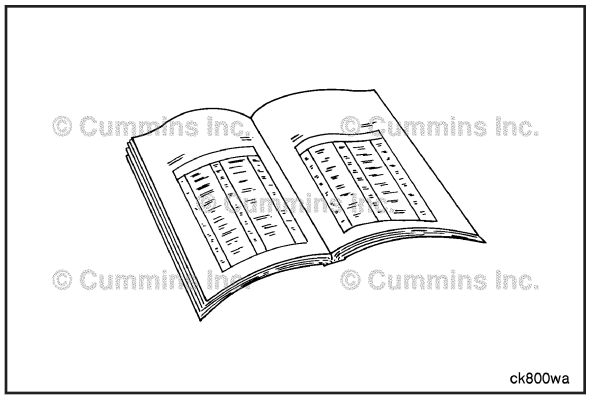

QSC Engines

WARNING

Batteries can emit explosive gases. To reduce the possibility of personal injury, always ventilate the compartment before servicing the batteries. To reduce the possibility of arcing, remove the negative (-) battery cable first and attach the negative (-) battery cable last.

WARNING

Depending on the circumstance, diesel fuel is flammable. When inspecting or performing service or repairs on the fuel system, to reduce the possibility of fire and resulting severe personal injury, death, or property damage, never smoke or allow sparks or flames (such ass pilot lights, electrical switches, or welding equipment) in the work area.

CAUTION

Use caution when disconnecting or removing fuel lines, replacing filters and priming the fuel system that fuel is not spilled or drained into the bilge area. Do not drop or throw filter elements into the bilge area. The fuel and fuel filters must be discarded in accordance with local environmental regulations.

CAUTION

Zinc plugs expand and can break off during removal. Inspect the zinc plug to make sure it is in one piece. If not, it must be replaced with a new zinc plug, and the broken pieces must be retrieved from the aftercooler to prevent damage to components downstream in the sea water system.

- Close the sea water supply and return lines. See equipment manufacturer service information.
- Disconnect the batteries. Refer to Procedure 013-009 in Section 4.
- Drain the sea water system by removing the plugs at the bottom of the marine gear oil and marine fuel cooler.
- Remove the aftercooler air box drain plug and drain the condensation from the aftercooler housing core.
- Remove the air crossover and air outlet tube.
- Remove the sea water lines. Refer to Procedure 008-056 in Section A.
- Remove the marine gear oil and fuel cooler assembly.

To buy Cummins Parts and Service Manuals, Training Guides, or Tools go to our website at https://store.cummins.com

Remove

QSL Engines

Loosen the aftercooler mounting capscrews at the flywheel housing (1), the cylinder block (2), and the cylinder head (3).

Remove the aftercooler assembly.

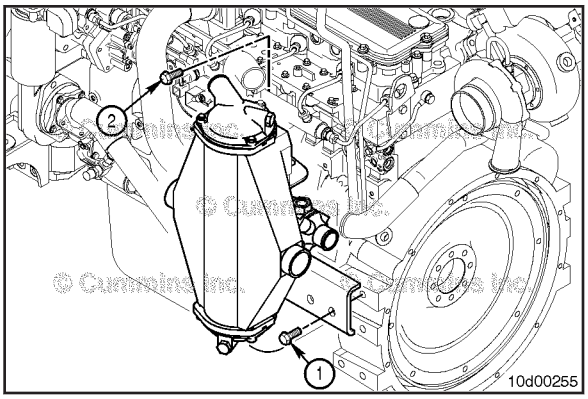

QSC Engines

Remove the upper mounting capscrews and loosen the bracket mounting capscrews in the cylinder block.

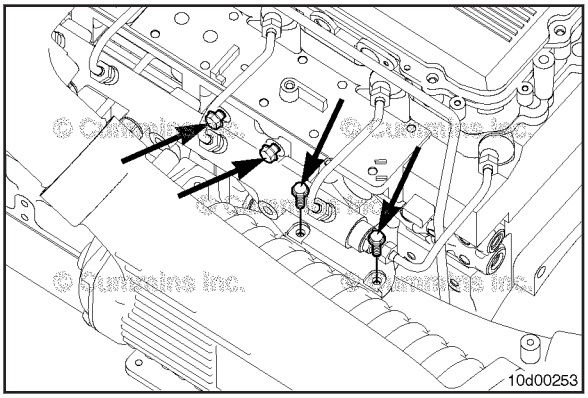

⚠ WARNING ⚠

This component weighs 23 kg [50 lb] or more. To reduce the possibility of personal injury, use a hoist or get assistance to lift this component.

Attach a lifting strap and use a suitable hoist to lift the assembly.

Remove the lower mounting capscrews.

Slide the assembly from the bracket and away from the engine.

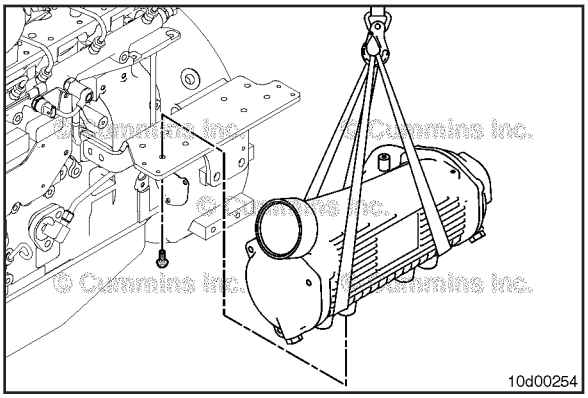

Disassemble

QSL Engines

Mark or note the aftercooler inlet and outlet water connection locations.

Remove the zinc plugs from the upper water transfer connection.

Remove the three capscrews and the upper water connection.

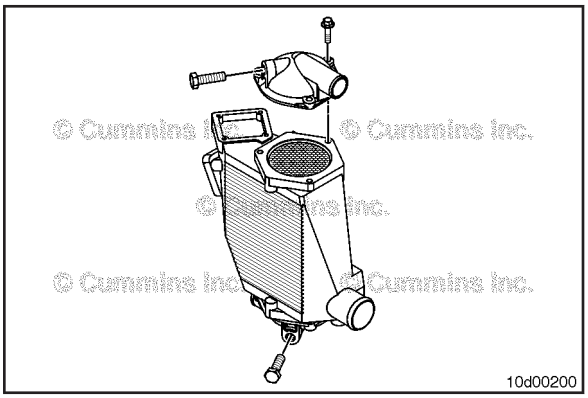

To buy Cummins Parts and Service Manuals, Training Guides, or Tools go to our website at https://store.cummins.com

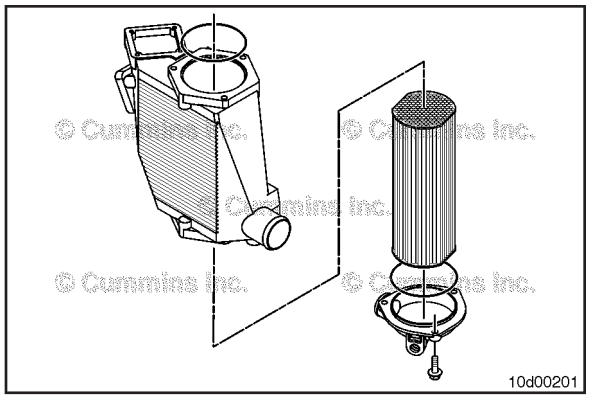

⚠CAUTION⚠

The aftercooler core assembly will slide out of the cooler housing when removing the lower aftercooler water connection. To reduce th possibility of damaging the core, lay the aftercooler assembly on its side to remove the connection and the core.

Lay the aftercooler assembly on its side.

The core assembly has two flat sides which **must** be oriented toward the aftercooler air intake and outlet sides of the aftercooler.

Remove the lower connection cover and the core.

If unable to remove the core by hand, a press should be used. A load spreading plate should be used to press on the outer ring of the core **only** and **not** on the ends of the tubes. The plate should have an outside diameter (OD) of 120 mm [4.72 in] and a step to fit inside the aftrecooler endplate lip of 116 mm [4.57 in]. It can take up to 1000 lbs to press the core out.

If the core is removed with a hammer (or impact), it can **not** be reused.

Remove the upper and lower sealing o-rings.

Remove the aftercooler check valve.

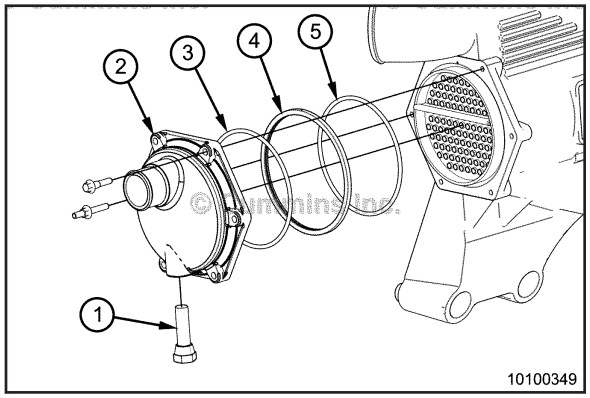

QSC Engines

Mark or note the aftercooler inlet and outlet water connection locations.

Remove the zinc plugs (1) from the upper water transfer connection (2).

Remove the front o-ring (3), sealing ring (4), and second front o-ring (5).

WARNING

The component or assembly weighs greater than 23 kg [50 lb]. To prevent serious personal injury, be sure to have assistance or use appropriate lifting equipment to lift this component or assembly.

The core assembly has two flat sides which **must** be oriented toward the aftercooler air intake and outlet sides of the aftercooler. There is an orientation pin (1) at the bottom rear of the core that aligns with a slot in the rear water inlet and outlet connection.

Remove the three capscrews and rear connection cover (2).

Remove the rear sealing o-ring (5) around the rear core outside diameter.

Remove the core (4).

Remove the front sealing o-ring (3).

Remove the aftercooler check valve (6) and zinc anode (7).

If unable to remove the core by hand, a press should be used. A load spreading plate should be used to press on the outer ring of the core **only** and **not** on the ends of the tubes. The plate should have an OD of 149 mm and a step to fit inside the aftercooler endplate lip of 146 mm. It can take up to 1000 lbs to press the core out.

If the core is removed with a hammer, or impact, it can **not** be reused.

Remove the aftercooler check valve.

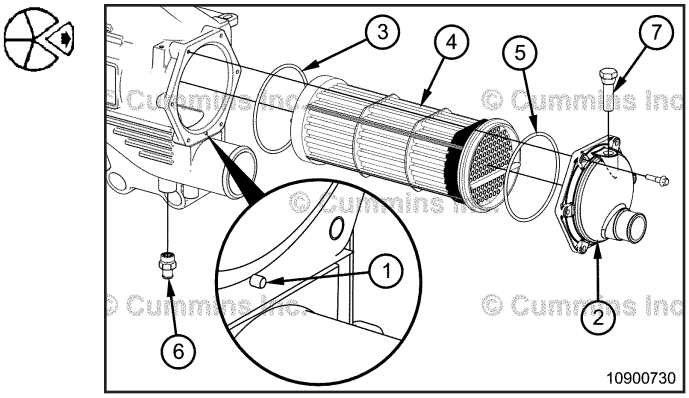

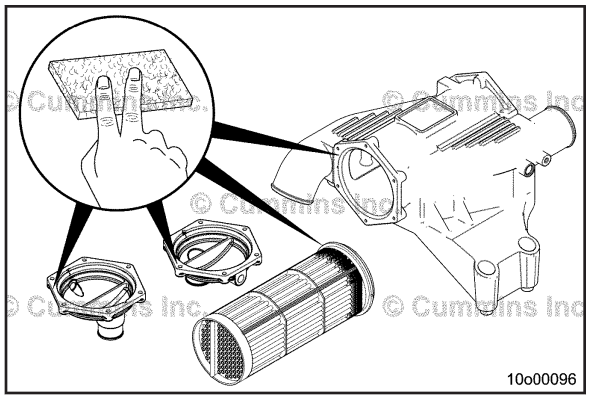

Clean and Inspect for Reuse

WARNING
Wear appropriate eye and face protection when using compressed air. Flying debris and dirt can cause personal injury.

CAUTION
Seawater leaks in the aftercooler can cause severe engine damage. Inspection for reuse and use of Cummins® seal kits are the extremely important.

NOTE: The cleaning and inspection step applies to both aftercooler options.

NOTE: The aftercooler fins can be cleaned by ultrasonic cleaning, power washing, or steam cleaning. Use care to **not** damage the fins. The aftercooler core tubes can be cleaned with acidic marine cleaners such as hull cleaners, muriatic acid, or by rodding with a brass or aluminum rod.

Clean the aftercooler core o-ring sealing areas with a Scotch-Brite™ pad or sandpaper. Do **not** use power tools to clean the housing (removing material will result in aftercooler leaking).

Clean the aftercooler housing sealing areas and internal passages with Scotch-Brite™ pad or sandpaper. Do **not** use power tools to clean the housing. Removing seal area material will result in aftercooler leaking.

Clean water inlet and outlet connection sealing areas with a Scotch-Brite™ pad or sandpaper. Do **not** use power tools (removing seal area material will result in aftercooler leaking). White anode deposits in the water connections can be removed with acidic marine cleaners such as hull cleaners or muriatic acid.

Dry with compressed air.

To buy Cummins Parts and Service Manuals, Training Guides, or Tools go to our website at https://store.cummins.com

Inspect the housing for signs of seawater leaking into the intake air. Large amounts of corrosion will be present in the middle of the housing if leaking occurs. If there is a leak and the source can **not** be found, the entire aftercooler **must** be replaced.

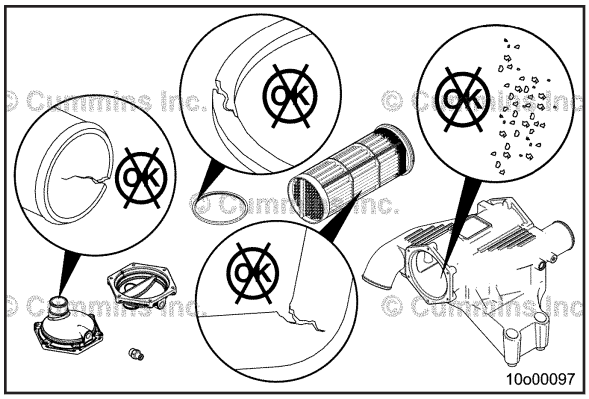

Inspect the aftercooler assembly housing and water inlet and outlet connections for cracks or other damage.

Inspect the aftercooler housing, sealing ring, and core for the following:

- Deterioration of sealing surfaces
- Pitting/scratches over 0.25 mm [0.010 in] deep.

Any pitting over specified value above, replace the component.

Inspect the aftercooler check valve for proper operation. The valve should flow air freely under low pressure and close under high-pressure. A pressure of over 3.45 kPa [0.5 psi] from the threaded-side of the valve should make it close. Check operation using compressed air. The internal piston should rattle when shaken. Replace the valve if **not** operating.

Inspect the valve for excessive deposits on its interior surface. White deposits over 1.59 mm [0.063 in] thick or clogging of the valve indicate an internal seawater leak.

Inspect the molded hoses for damage. Replace if damage is found.

To buy Cummins Parts and Service Manuals, Training Guides, or Tools go to our website at https://store.cummins.com

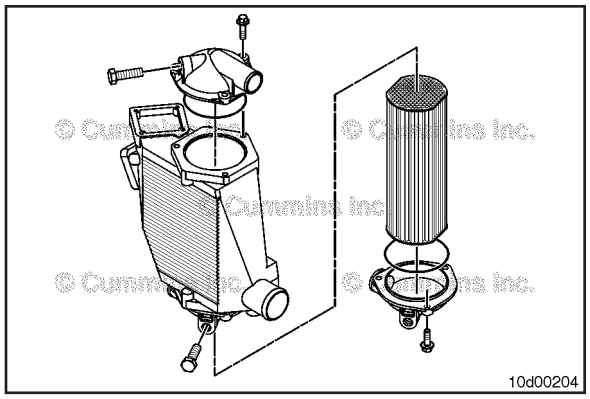

Assemble

QSL Engines

Assemble the aftercooler in a vertical position.

Coat the following with Alco-Metalube® or Mercury® Quicksilver® 2-4-2 Marine Grease.

- OD of the core end plates.
- The flat machined surfaces and the first inch of the bore in the housing at both of the ends of the aftercooler housing.
- Machined surfaces on the inside of the water inlet and outlet connections.

Install the aftercooler core into the aftercooler housing. Align the marks so one flat side of the core is facing the air inlet side of the housing.

Apply lubricant from the seal kit to o-rings before they are installed.

Install a new o-ring around the lower core outside diameter.

Install the water inlet and outlet connection and tighten the capscrews.

Torque Value: 45 N•m [33 ft-lb]

Install a new o-ring on the aftercooler check valve, if needed.

Install the aftercooler check valve.

Torque Value: 30 N•m [22 ft-lb]

Install the zinc plugs and tighten. Refer to Procedure 008-059 in Section 4.

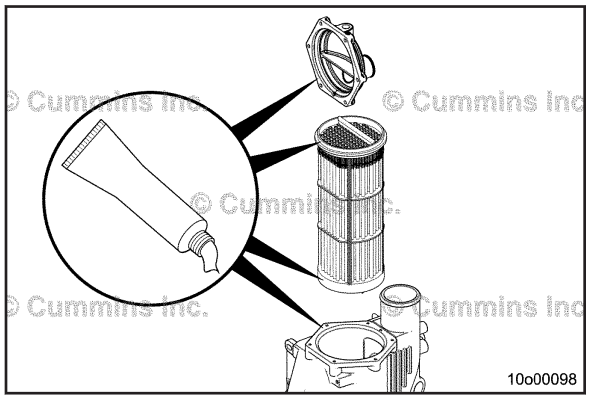

QSC Engines

Assemble the aftercooler in a horizontal position.

Coat the following with Alco-Metalube® or Mercury® Quicksilver® 2-4-C Marine Grease.

- Outer diameter of the core end plates.
- The flat machined surfaces and the first inch of the bore in the housing at both ends of the aftercooler housing.
- Machined surfaces on the inside of the water inlet and outlet connections.

Apply Alco-Metalube® or Mercury® Quicksilver® 2-4-C Marine Grease to o-rings before they are installed.

Install the sealing o-ring (3) onto the core (4) and slide back to the ridge on the core.

Align the locating pin (1) on the lower rear of the core to the bottom of the aftercooler housing. This pin mates with a slot in the rear water inlet and outlet connection (2).

Install a new o-ring (5) around the rear core outside diameter.

Install the aftercooler core (4) into the aftercooler housing.

Install the rear water inlet and outlet connection and tighten the three capscrews.

Torque Value: 45 N•m [33 ft-lb]

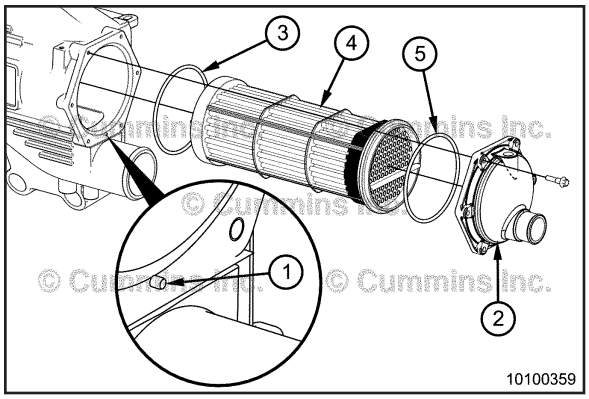

Install the first new front o-ring (4) around the front core outside diameter.

Coat the entire sealing ring (3) with Alco-Metalube® or Mercury® Quicksilver® 2-4-C Marine Grease.

Install the sealing ring (3) on the front of the core.

Install the second new front o-ring (2) around the front core outside diameter.

Install the front water inlet and outlet connection (1) and tighten the three capscrews.

Torque Value: 45 N•m [33 ft-lb]

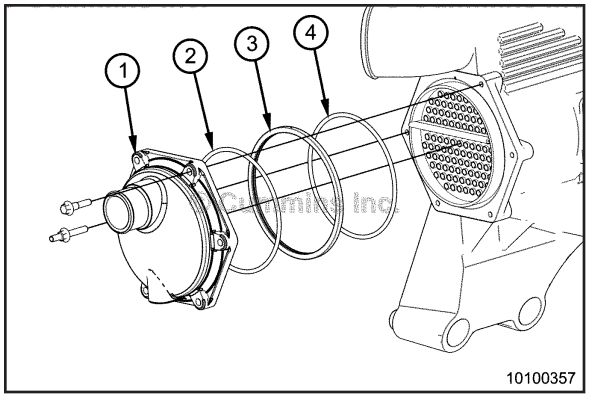

Install a new o-ring on the aftercooler check valve (1), if needed.

Install the aftercooler check valve.

Torque Value: 30 N•m [22 ft-lb]

Install the zinc plugs (2) and tighten. Refer to Procedure 008-059 in Section 4.

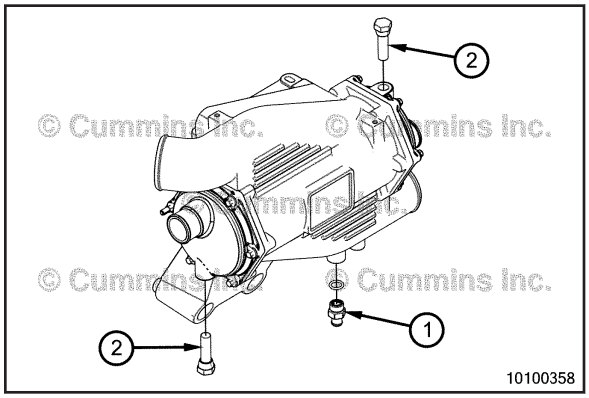

Install

QSL Engines

Loosely install the aftercooler assembly to the flywheel housing first using two mounting capscrews.

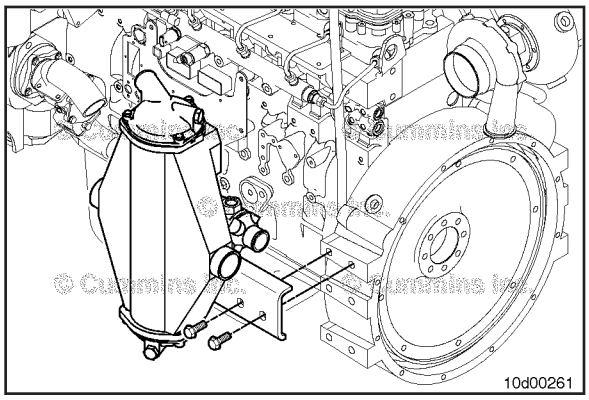

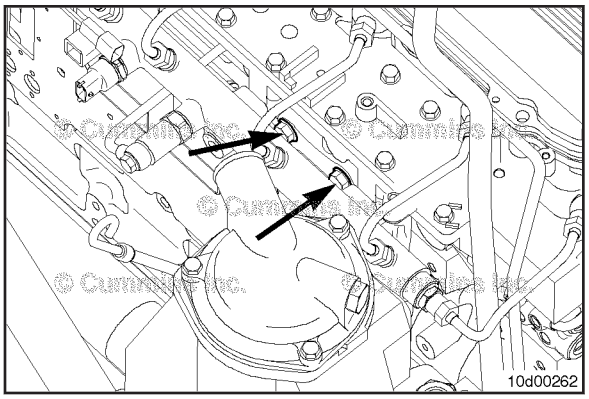

Install the upper capscrews first.

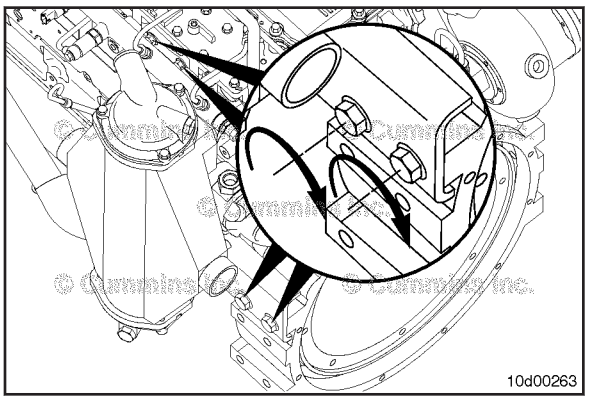

Install the aftercooler to bracket mounting capscrews.

Tighten all capscrews.

Torque Value:
Bracket to Flywheel Housing 100 N•m [74 ft-lb]

Torque Value:
Bracket to Cylinder Head 44 N•m [32 ft-lb]

Torque Value:
Aftercooler to Bracket 35 N•m [26 ft-lb]

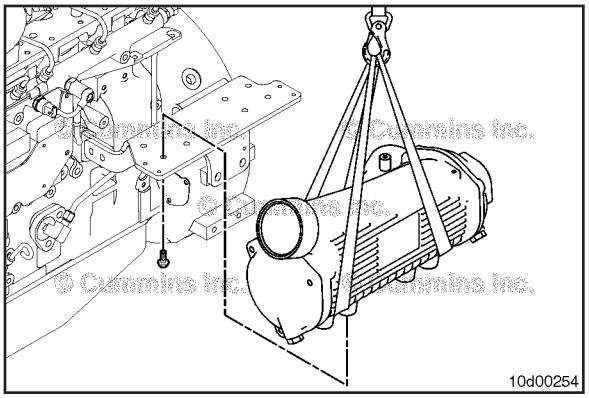

QSC Engines

WARNING

This component or assembly weighs greater than 23 kg [50 lb]. To prevent serious personal injury, be sure to have assistance or use appropriate lifting equipment to lift this component or assembly.

Attach a lifting strap and use a suitable hoist to lift the aftercooler assembly into place. Slide the assembly onto the lower support bracket and install the lower mounting capscrews.

Tighten the capscrews.

Torque Value: 35 N•m [26 ft-lb]

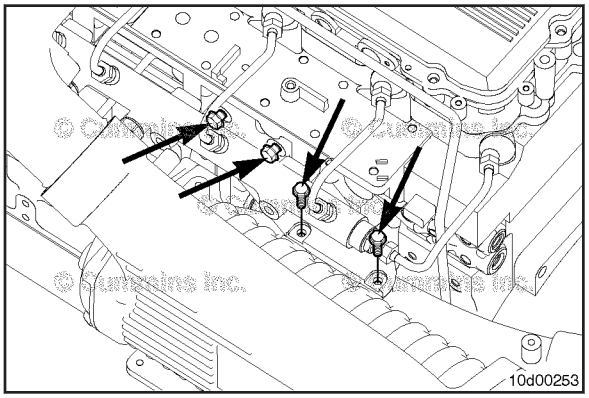

Install the upper bracket to the aftercooler mounting capscrews. Tighten all of the upper bracket mounting capscrews finger-tight.

Tighten the bracket to the cylinder block mounting capscrews.

Torque Value: 44 N•m [32 ft-lb]

Tighten the bracket to the aftercooler mounting capscrews.

Torque Value: 35 N•m [26 ft-lb]

To buy Cummins Parts and Service Manuals, Training Guides, or Tools go to our website at https://store.cummins.com

Finishing Steps

QSL Engines

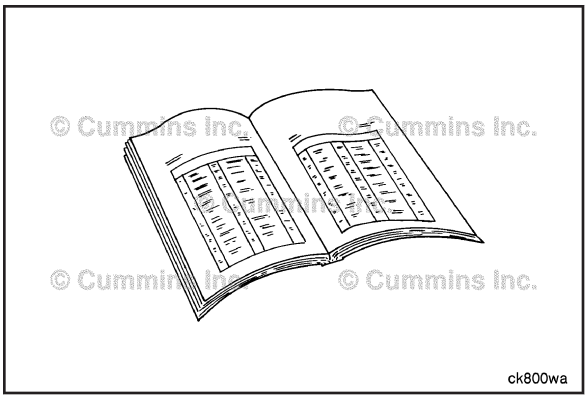

WARNING

Batteries can emit explosive gases. To reduce the possibility of personal injury, always ventilate the compartment before servicing the batteries. To reduce the possibility of arcing, remove the negative (-) battery cable first and attach the negative (-) battery cable last.

- Connect the aftercooler air inlet connection to the turbocharger.
- Install the aftercooler seawater discharge to marine gear cooler hose and tighten the hose clamps.
- If removed, install the aftercooler air discharge to the intake air connection.
- Tighten the aftercooler top and bottom air connection hose clamps.
- Connect the batteries. Refer to Procedure 013-009 in Section 4.
- Open the sea water supply and return valves. See equipment manufacturer service information.
- Open the fuel supply and return valves. See equipment manufacturer service information.
- Operate the engine and check for leaks.

QSC Engines

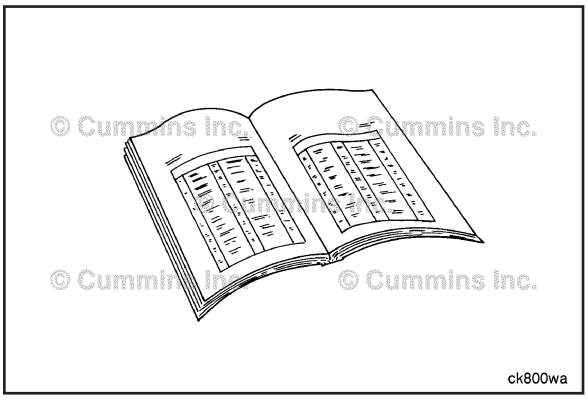

WARNING

Batteries can emit explosive gases. To reduce the possibility of personal injury, always ventilate the compartment before servicing the batteries. To reduce the possibility of arcing, remove the negative (-) battery cable first and attach the negative (-) battery cable last.

- Open the sea water supply and return valves. See equipment manufacturer service information.
- Connect the batteries. Refer to Procedure 013-009 in Section 4.
- Operate the engine and check for leaks.

Flush

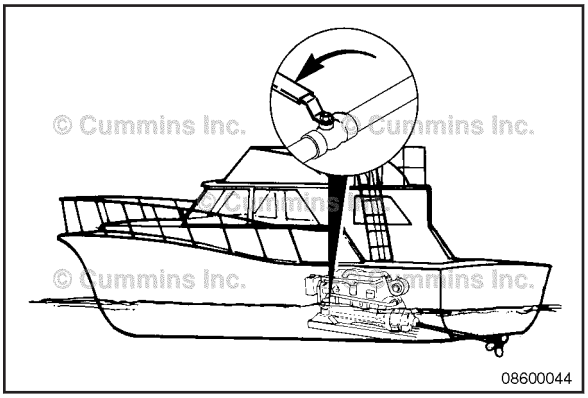

CAUTION

Zinc plugs expand and can break off during removal. Inspect the zinc plug to make sure it is in one piece. If not, it must be replaced with a new zinc plug, and the broken pieces must be retrieved from the aftercooler to prevent damage to components downstream in the sea water system

Shut OFF the sea water inlet valve on the vessel hull, if equipped.

To buy Cummins Parts and Service Manuals, Training Guides, or Tools go to our website at https://store.cummins.com

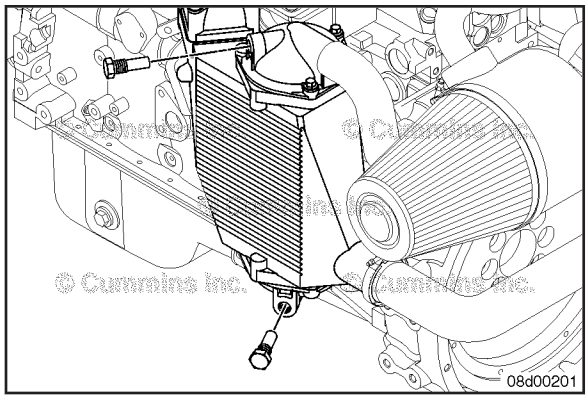

Remove the aftercooler assembly zinc anodes (1) and drain the sea water from the aftercooler assembly.

Disconnect the sea water inlet and outlet connections.

Typical hose connections are shown.

Refer to Procedure 100-002 in Section E.

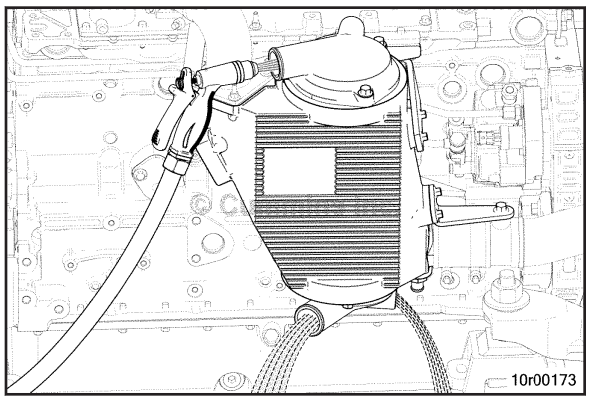

Use clean water to back flush all the debris from the cooler.

Make sure the debris flushed from the cooler does **not** enter the water supply hoses.

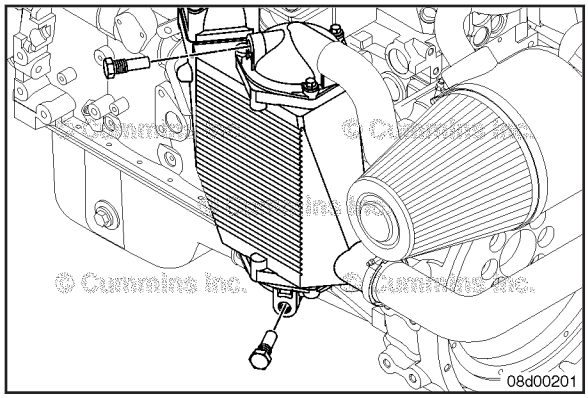

Install two zinc anodes and sea water hose connections.

Inspect and install the zinc plugs in the aftercooler assembly. Refer to Procedure 008-059 in Section 4.

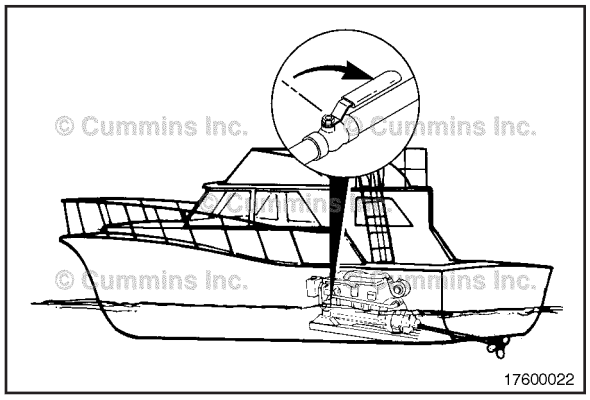

Open the sea water valve on the vessel hull, if closed.

Section 7 - Maintenance Procedures at 1500 Hours

Section Contents

Page
Maintenance Procedures - Overview 7-1
General Information 7-1
Overhead Set 7-1
Adjust 7-1
Finishing Steps 7-3
Preparatory Steps 7-1

To buy Cummins Parts and Service Manuals, Training Guides, or Tools go to our website at https://store.cummins.com

This Page Left Intentionally Blank

Maintenance Procedures - Overview

General Information

All maintenance checks and inspections listed in previous maintenance intervals **must** also be performed at this time, in addition to those listed under this maintenance interval.

Overhead Set

Preparatory Steps

Remove the crankcase breather tube, rocker lever cover mounted breather **only**.

Remove the capscrews.

Remove the rocker lever cover and gasket.

NOTE: Rocker lever cover configurations will be different based upon if the cover is center-bolted or perimeter bolted. The rocker lever cover can also be taller if the engine is equipped with engine brakes.

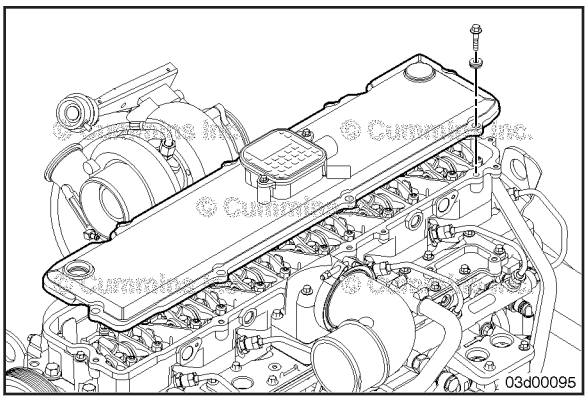

Remove the plastic fuel pump drive cover located on the front of the engine.

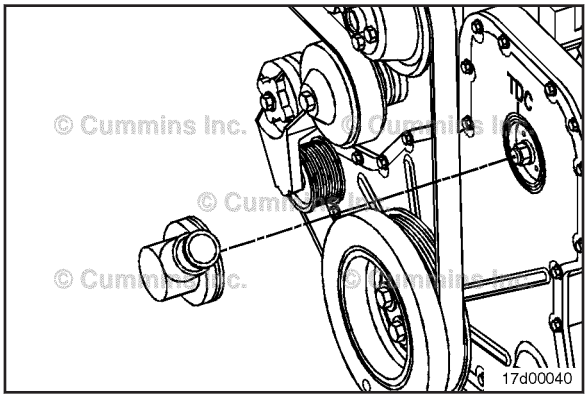

Adjust

⚠CAUTION⚠
Engine coolant temperature should be less than 60°C [140°F].

Use barring tool, Part Number 3824591, or equivalent, and rotate the crankshaft to align the Top Dead Center (TDC) marks on the gear cover and the fuel pump gear.

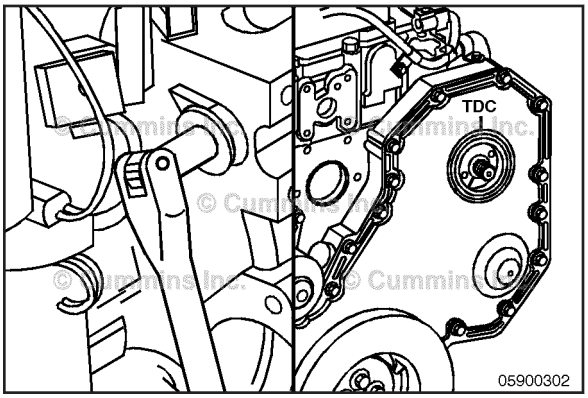

To buy Cummins Parts and Service Manuals, Training Guides, or Tools go to our website at https://store.cummins.com

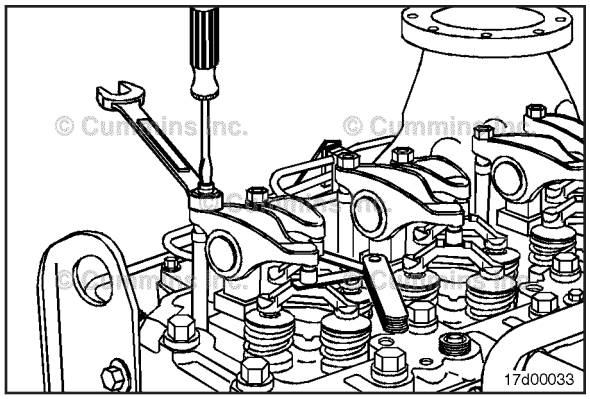

With the engine in this position, lash can be checked on the following rocker arms: 1I, 1E, 2I, 3E, 4I, and 5E.

Lash Check Limits

	mm		in
Intake	0.152	MIN	0.006
	0.559	MAX	0.022
Exhaust	0.381	MIN	0.015
	0.813	MAX	0.032

NOTE: Lash checks are performed as part of a troubleshooting procedure, and resetting is **not** required during checks as long as the lash measurements are within the above limits.

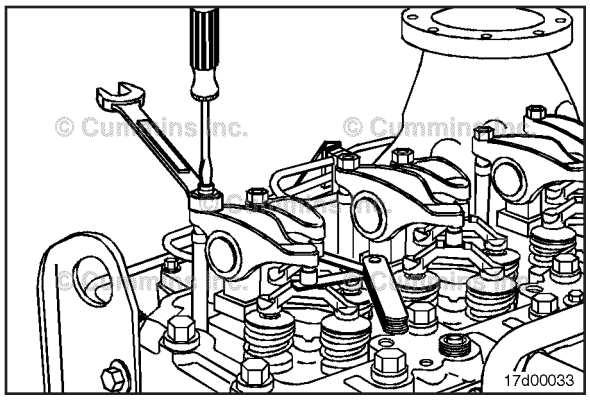

Measure lash by inserting a feeler gauge between the crosshead and the rocker lever ball insert and socket while lifting up on the end of the rocker arm. If the lash measurement is out of specification, loosen the locknut and adjust the lash to the nominal specification.

Lash Reset Specifications

	mm		in
Intake	0.305	NOM	0.012
Exhaust	0.559	NOM	0.022

NOTE: Lash resets are **only** required at the interval specified in the Maintenance Schedule, when lash is measured and found out of specification, or when engine repairs cause removal of the rocker arms and/or loosening of the adjusting screws.

Tighten the locknut and measure again.

Torque Value: 24 N•m [212 in-lb]

Install the nut cap on the exhaust adjusting screws for engine brakes, if applicable.

Torque Value: 24 N•m [212 in-lb]

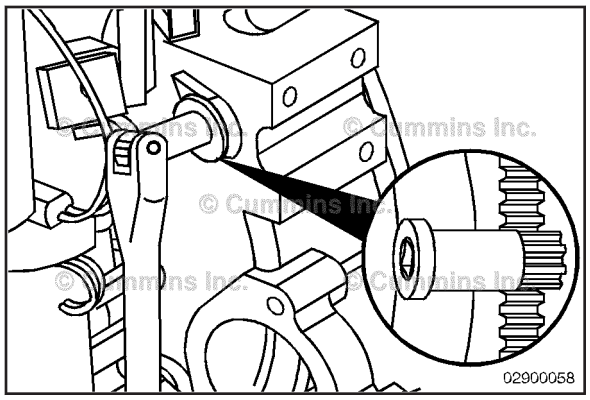

Use the barring tool, Part Number 3824591, or equivalent, and rotate the crankshaft 360 degrees and measure lash for rocker arms 2E, 3I, 4E, 5I, 6I, and 6E.

Reset the lash, if out of specification.

To buy Cummins Parts and Service Manuals, Training Guides, or Tools go to our website at https://store.cummins.com

Finishing Steps

Center Bolted Rocker Lever Cover

Place the gasket on the cylinder head. Be sure the gasket is properly aligned around the cylinder head capscrews.

Install the rocker lever cover and capscrews.

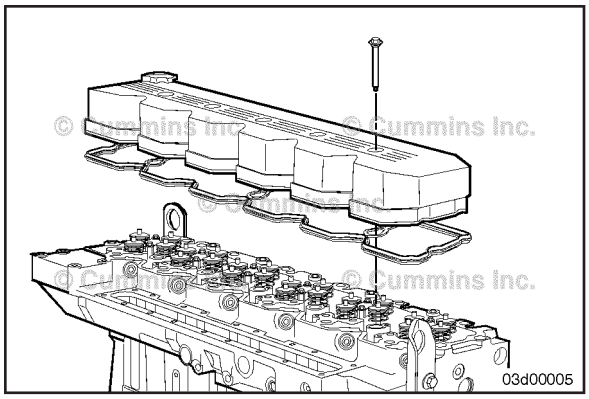

Tighten the capscrews.

Torque Value: 12 N•m [106 in-lb]

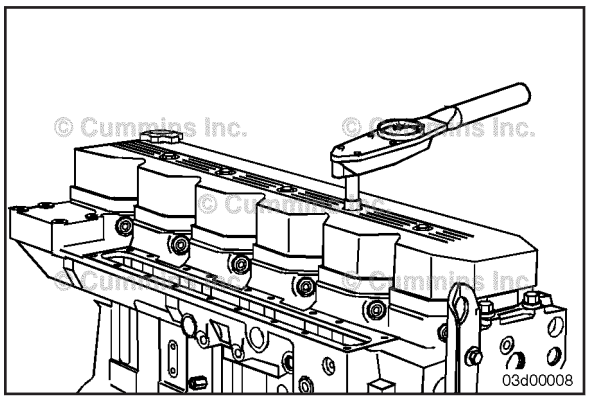

Perimeter Bolted Rocker Lever Cover

NOTE: If the gasket has been removed from the rocker lever cover, a new gasket **must** be used.

The following installation procedure **must** be used when installing the press-in gasket.

1. Press the molded gasket into the corners of the rocker lever cover.
2. Press the gasket around the capscrew mounting holes.
3. Press the remaining gasket into the rocker lever cover.

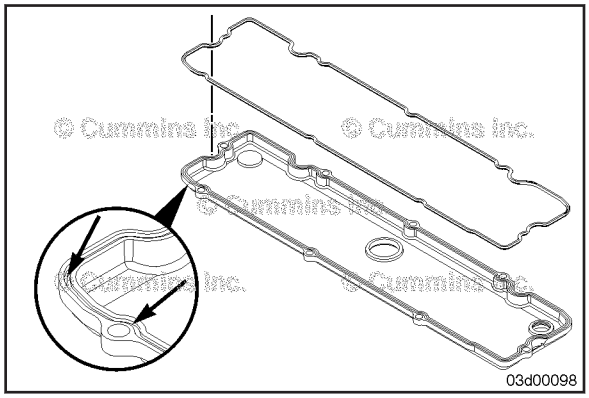

Install the rocker lever cover and capscrews.

Torque Value: 12 N•m [106 in-lb]

Install the crankcase breather tube, rocker lever cover mounted breather **only**.

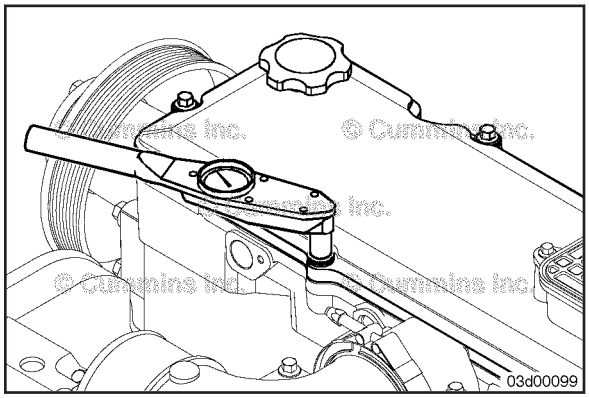

Notes

Section 8 - Maintenance Procedures at 3 Years

Section Contents

Page
Aftercooler Assembly (Sea Water) 8-1
Assemble 8-9
Clean and Inspect for Reuse 8-7
Disassemble 8-4
Finishing Steps 8-12
Flush 8-12
Initial Check 8-1
Install 8-10
Preparatory Steps 8-2
Remove 8-4
Maintenance Procedures - Overview 8-1
General Information 8-1

To buy Cummins Parts and Service Manuals, Training Guides, or Tools go to our website at https://store.cummins.com

This Page Left Intentionally Blank

Maintenance Procedures - Overview

General Information

All maintenance checks and inspections listed in previous maintenance intervals **must** also be performed at this time, in addition to those listed under this maintenance interval.

Aftercooler Assembly (Sea Water)

Initial Check

A turbocharger or sea water pump malfunction can cause damage to the aftercooler assembly.

If a turbocharger malfunction or a sea water pump malfunction has occurred, remove the aftercooler element and inspect the element and housing for damage.

Inspect the zinc anodes to make sure they are still in one piece and are **not** broken.

See the Inspect step within this procedure.

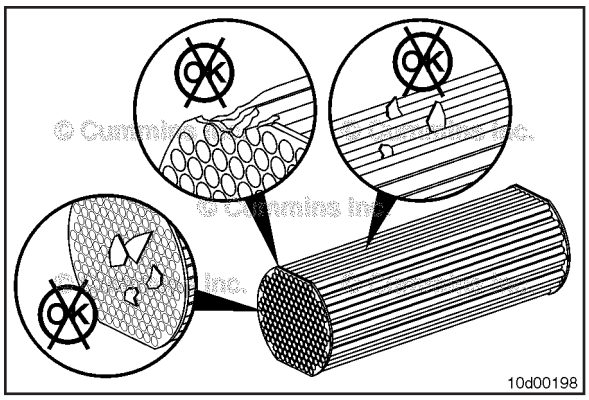

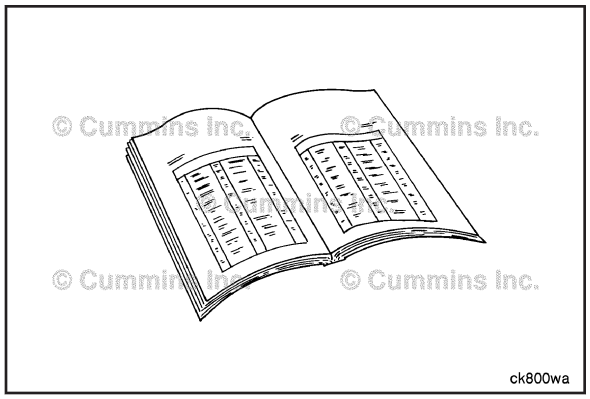

Preparatory Steps

QSL Engines

⚠WARNING⚠
Batteries can emit explosive gases. To reduce the possibility of personal injury, always ventilate the compartment before servicing the batteries. To reduce the possibility of arcing, remove the negative (-) battery cable first and attach the negative (-) battery cable last.

⚠WARNING⚠
Depending on the circumstance, diesel fuel is flammable. When inspecting or performing service or repairs on the fuel system, to reduce the possibility of fire and resulting severe personal injury, death, or property damage, never smoke or allow sparks or flames (such as pilot lights, electrical switches, or welding equipment) in the work area.

△CAUTION△
Use caution when disconnecting or removing fuel lines, replacing filters and priming the fuel system that fuel is not spilled or drained into the bilge area. Do not drop or throw filter elements into the bilge area. The fuel and fuel filters must be discarded in accordance with local environmental regulations.

△CAUTION△
Zinc plugs expand and can break off during removal. Inspect the zinc plug to make sure it is in one piece. If not, it must be replaced with a new zinc plug, and the broken pieces must be retrieved from the aftercooler to prevent damage to components downstream in the sea water system.

- Close the sea water supply and return valves. See equipment manufacturer service information.
- Close the fuel supply and return valves. See equipment manufacturer service information.
- Disconnect the battery power from the engine. Refer to Procedure 013-009 in Section 4.
- Drain the sea water by removing the zinc anode plug at the bottom of the aftercooler. Refer to Procedure 008-059 in Section 4.
- Loosen the aftercooler top and bottom air connection hose clamps.
- If necessary, remove the aftercooler air discharge connection.
- Disconnect the aftercooler air inlet connection.
- Loosen the hose clamp on the upper water transfer connection and remove the aftercooler sea water discharge hose.

To buy Cummins Parts and Service Manuals, Training Guides, or Tools go to our website at https://store.cummins.com

QSC Engines

⚠WARNING⚠
Batteries can emit explosive gases. To reduce the possibility of personal injury, always ventilate the compartment before servicing the batteries. To reduce the possibility of arcing, remove the negative (-) battery cable first and attach the negative (-) battery cable last.

⚠WARNING⚠
Depending on the circumstance, diesel fuel is flammable. When inspecting or performing service or repairs on the fuel system, to reduce the possibility of fire and resulting severe personal injury, death, or property damage, never smoke or allow sparks or flames (such ass pilot lights, electrical switches, or welding equipment) in the work area.

⚠CAUTION⚠
Use caution when disconnecting or removing fuel lines, replacing filters and priming the fuel system that fuel is not spilled or drained into the bilge area. Do not drop or throw filter elements into the bilge area. The fuel and fuel filters must be discarded in accordance with local environmental regulations.

⚠CAUTION⚠
Zinc plugs expand and can break off during removal. Inspect the zinc plug to make sure it is in one piece. If not, it must be replaced with a new zinc plug, and the broken pieces must be retrieved from the aftercooler to prevent damage to components downstream in the sea water system.

- Close the sea water supply and return lines. See equipment manufacturer service information.
- Disconnect the batteries. Refer to Procedure 013-009 in Section 4.
- Drain the sea water system by removing the plugs at the bottom of the marine gear oil and marine fuel cooler.
- Remove the aftercooler air box drain plug and drain the condensation from the aftercooler housing core.
- Remove the air crossover and air outlet tube.
- Remove the sea water lines. Refer to Procedure 008-056 in Section A.
- Remove the marine gear oil and fuel cooler assembly.

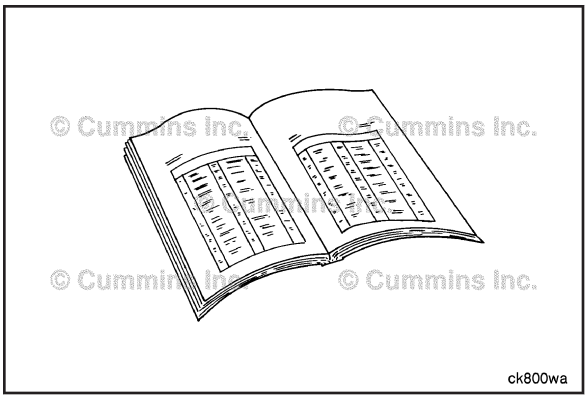

To buy Cummins Parts and Service Manuals, Training Guides, or Tools go to our website at https://store.cummins.com

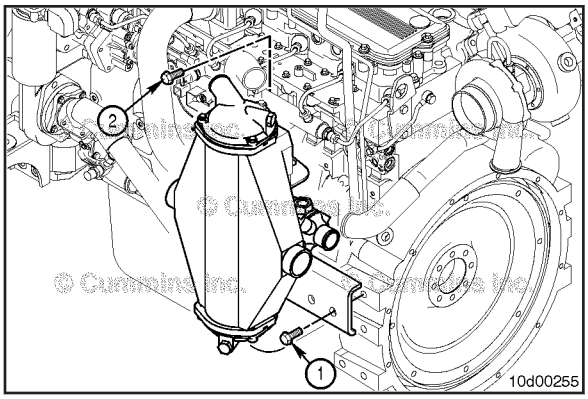

Remove

QSL Engines

Loosen the aftercooler mounting capscrews at the flywheel housing (1), the cylinder block (2), and the cylinder head (3).

Remove the aftercooler assembly.

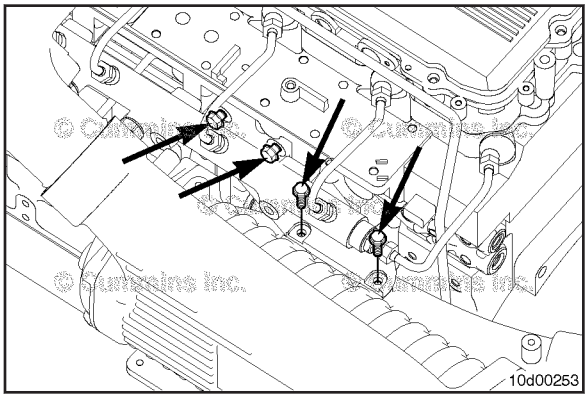

QSC Engines

Remove the upper mounting capscrews and loosen the bracket mounting capscrews in the cylinder block.

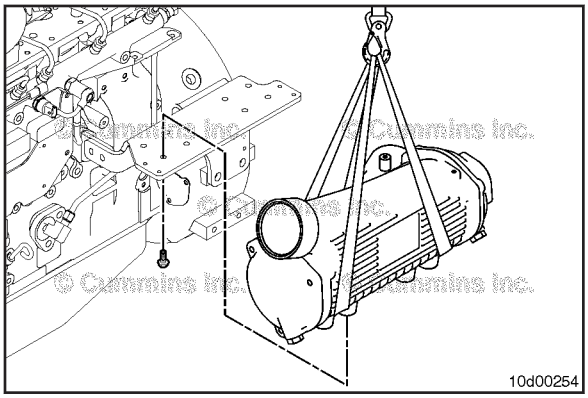

⚠WARNING⚠

This component weighs 23 kg [50 lb] or more. To reduce the possibility of personal injury, use a hoist or get assistance to lift this component.

Attach a lifting strap and use a suitable hoist to lift the assembly.

Remove the lower mounting capscrews.

Slide the assembly from the bracket and away from the engine.

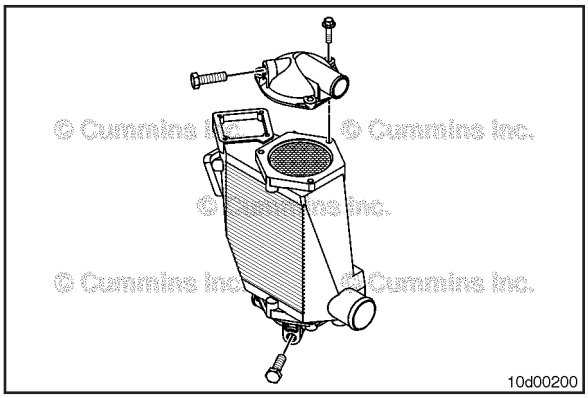

Disassemble

QSL Engines

Mark or note the aftercooler inlet and outlet water connection locations.

Remove the zinc plugs from the upper water transfer connection.

Remove the three capscrews and the upper water connection.

To buy Cummins Parts and Service Manuals, Training Guides, or Tools go to our website at https://store.cummins.com

⚠CAUTION⚠

The aftercooler core assembly will slide out of the cooler housing when removing the lower aftercooler water connection. To reduce th possibility of damaging the core, lay the aftercooler assembly on its side to remove the connection and the core.

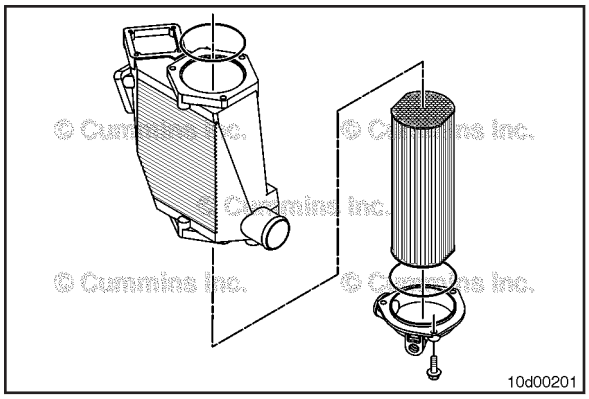

Lay the aftercooler assembly on its side.

The core assembly has two flat sides which **must** be oriented toward the aftercooler air intake and outlet sides of the aftercooler.

Remove the lower connection cover and the core.

If unable to remove the core by hand, a press should be used. A load spreading plate should be used to press on the outer ring of the core **only** and **not** on the ends of the tubes. The plate should have an outside diameter (OD) of 120 mm [4.72 in] and a step to fit inside the aftrecooler endplate lip of 116 mm [4.57 in]. It can take up to 1000 lbs to press the core out.

If the core is removed with a hammer (or impact), it can **not** be reused.

Remove the upper and lower sealing o-rings.

Remove the aftercooler check valve.

QSC Engines

Mark or note the aftercooler inlet and outlet water connection locations.

Remove the zinc plugs (1) from the upper water transfer connection (2).

Remove the front o-ring (3), sealing ring (4), and second front o-ring (5).

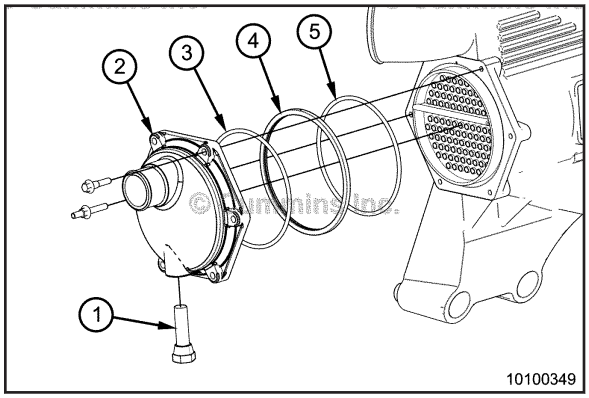

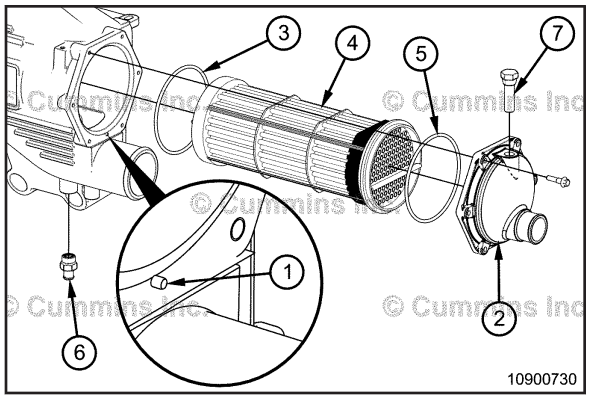

WARNING

The component or assembly weighs greater than 23 kg [50 lb]. To prevent serious personal injury, be sure to have assistance or use appropriate lifting equipment to lift this component or assembly.

The core assembly has two flat sides which **must** be oriented toward the aftercooler air intake and outlet sides of the aftercooler. There is an orientation pin (1) at the bottom rear of the core that aligns with a slot in the rear water inlet and outlet connection.

Remove the three capscrews and rear connection cover (2).

Remove the rear sealing o-ring (5) around the rear core outside diameter.

Remove the core (4).

Remove the front sealing o-ring (3).

Remove the aftercooler check valve (6) and zinc anode (7).

If unable to remove the core by hand, a press should be used. A load spreading plate should be used to press on the outer ring of the core **only** and **not** on the ends of the tubes. The plate should have an OD of 149 mm and a step to fit inside the aftercooler endplate lip of 146 mm. It can take up to 1000 lbs to press the core out.

If the core is removed with a hammer, or impact, it can **not** be reused.

Remove the aftercooler check valve.

To buy Cummins Parts and Service Manuals, Training Guides, or Tools go to our website at https://store.cummins.com

Clean and Inspect for Reuse

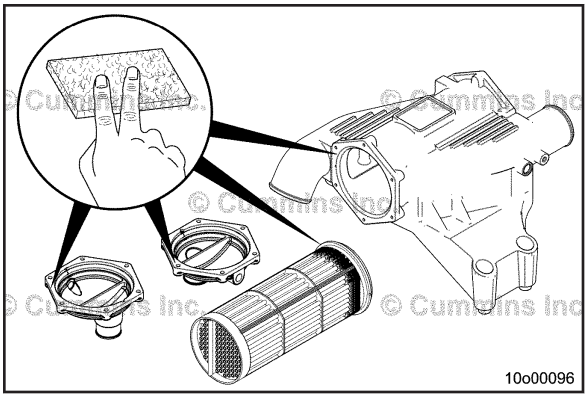

WARNING

Wear appropriate eye and face protection when using compressed air. Flying debris and dirt can cause personal injury.

CAUTION

Seawater leaks in the aftercooler can cause severe engine damage. Inspection for reuse and use of Cummins® seal kits are the extremely important.

NOTE: The cleaning and inspection step applies to both aftercooler options.

NOTE: The aftercooler fins can be cleaned by ultrasonic cleaning, power washing, or steam cleaning. Use care to **not** damage the fins. The aftercooler core tubes can be cleaned with acidic marine cleaners such as hull cleaners, muriatic acid, or by rodding with a brass or aluminum rod.

Clean the aftercooler core o-ring sealing areas with a Scotch-Brite™ pad or sandpaper. Do **not** use power tools to clean the housing (removing material will result in aftercooler leaking).

Clean the aftercooler housing sealing areas and internal passages with Scotch-Brite™ pad or sandpaper. Do **not** use power tools to clean the housing. Removing seal area material will result in aftercooler leaking.

Clean water inlet and outlet connection sealing areas with a Scotch-Brite™ pad or sandpaper. Do **not** use power tools (removing seal area material will result in aftercooler leaking). White anode deposits in the water connections can be removed with acidic marine cleaners such as hull cleaners or muriatic acid.

Dry with compressed air.

To buy Cummins Parts and Service Manuals, Training Guides, or Tools go to our website at https://store.cummins.com

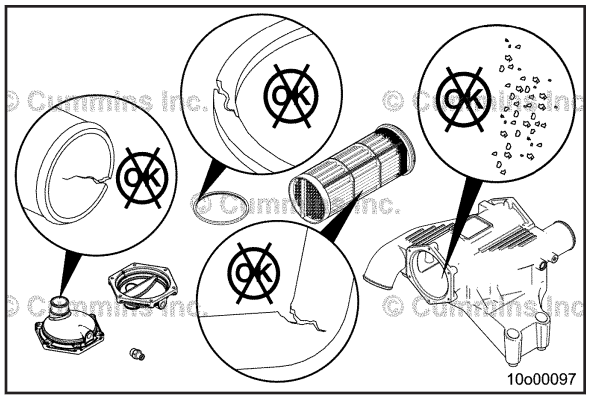

Inspect the housing for signs of seawater leaking into the intake air. Large amounts of corrosion will be present in the middle of the housing if leaking occurs. If there is a leak and the source can **not** be found, the entire aftercooler **must** be replaced.

Inspect the aftercooler assembly housing and water inlet and outlet connections for cracks or other damage.

Inspect the aftercooler housing, sealing ring, and core for the following:

- Deterioration of sealing surfaces
- Pitting/scratches over 0.25 mm [0.010 in] deep.

Any pitting over specified value above, replace the component.

Inspect the aftercooler check valve for proper operation. The valve should flow air freely under low pressure and close under high-pressure. A pressure of over 3.45 kPa [0.5 psi] from the threaded-side of the valve should make it close. Check operation using compressed air. The internal piston should rattle when shaken. Replace the valve if **not** operating.

Inspect the valve for excessive deposits on its interior surface. White deposits over 1.59 mm [0.063 in] thick or clogging of the valve indicate an internal seawater leak.

Inspect the molded hoses for damage. Replace if damage is found.

To buy Cummins Parts and Service Manuals, Training Guides, or Tools go to our website at https://store.cummins.com

Assemble

QSL Engines

Assemble the aftercooler in a vertical position.

Coat the following with Alco-Metalube® or Mercury® Quicksilver® 2-4-2 Marine Grease.

- OD of the core end plates.
- The flat machined surfaces and the first inch of the bore in the housing at both of the ends of the aftercooler housing.
- Machined surfaces on the inside of the water inlet and outlet connections.

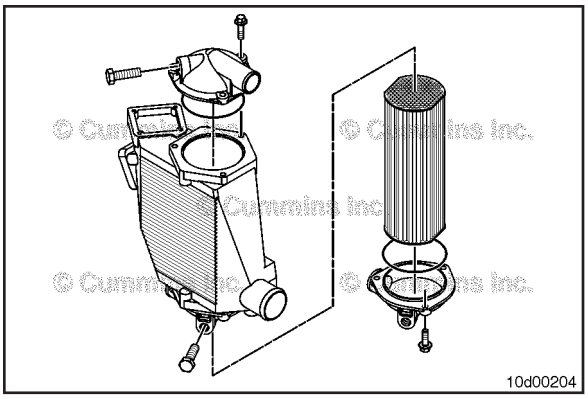

Install the aftercooler core into the aftercooler housing. Align the marks so one flat side of the core is facing the air inlet side of the housing.

Apply lubricant from the seal kit to o-rings before they are installed.

Install a new o-ring around the lower core outside diameter.

Install the water inlet and outlet connection and tighten the capscrews.

Torque Value: 45 N•m [33 ft-lb]

Install a new o-ring on the aftercooler check valve, if needed.

Install the aftercooler check valve.

Torque Value: 30 N•m [22 ft-lb]

Install the zinc plugs and tighten. Refer to Procedure 008-059 in Section 4.

QSC Engines

Assemble the aftercooler in a horizontal position.

Coat the following with Alco-Metalube® or Mercury® Quicksilver® 2-4-C Marine Grease.

- Outer diameter of the core end plates.
- The flat machined surfaces and the first inch of the bore in the housing at both ends of the aftercooler housing.
- Machined surfaces on the inside of the water inlet and outlet connections.

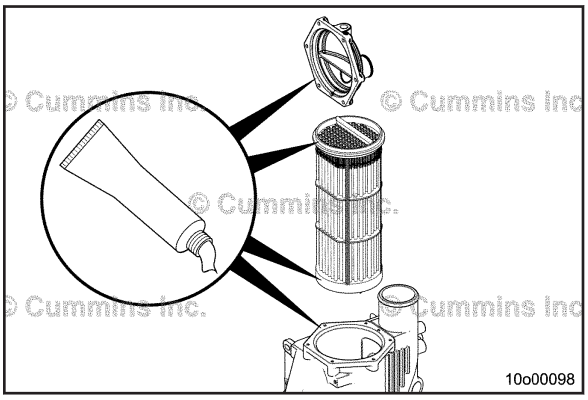

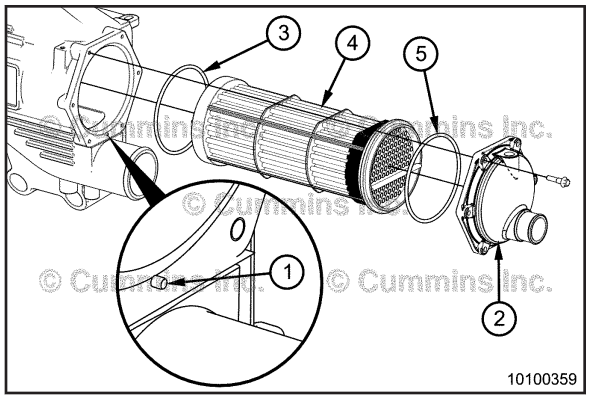

Apply Alco-Metalube® or Mercury® Quicksilver® 2-4-C Marine Grease to o-rings before they are installed.

Install the sealing o-ring (3) onto the core (4) and slide back to the ridge on the core.

Align the locating pin (1) on the lower rear of the core to the bottom of the aftercooler housing. This pin mates with a slot in the rear water inlet and outlet connection (2).

Install a new o-ring (5) around the rear core outside diameter.

Install the aftercooler core (4) into the aftercooler housing.

Install the rear water inlet and outlet connection and tighten the three capscrews.

Torque Value: 45 N•m [33 ft-lb]

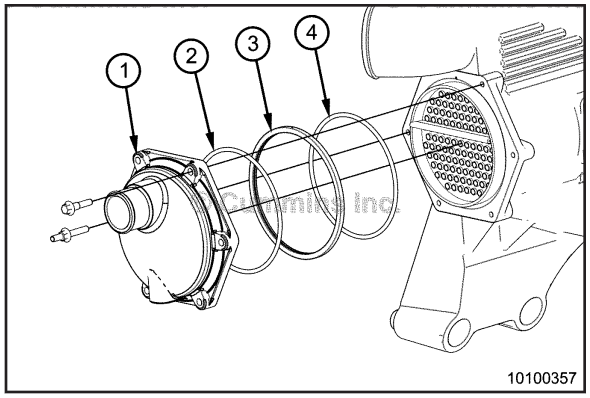

Install the first new front o-ring (4) around the front core outside diameter.

Coat the entire sealing ring (3) with Alco-Metalube® or Mercury® Quicksilver® 2-4-C Marine Grease.

Install the sealing ring (3) on the front of the core.

Install the second new front o-ring (2) around the front core outside diameter.

Install the front water inlet and outlet connection (1) and tighten the three capscrews.

Torque Value: 45 N•m [33 ft-lb]

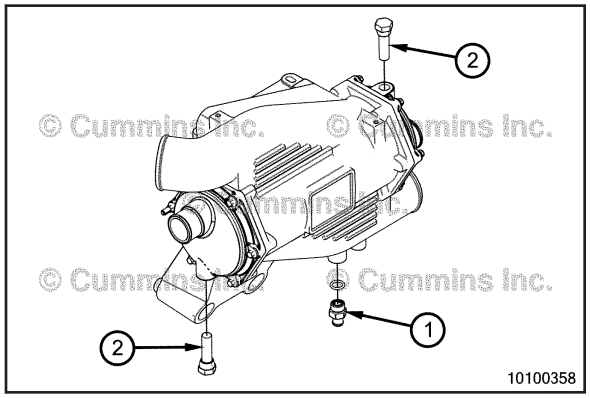

Install a new o-ring on the aftercooler check valve (1), if needed.

Install the aftercooler check valve.

Torque Value: 30 N•m [22 ft-lb]

Install the zinc plugs (2) and tighten. Refer to Procedure 008-059 in Section 4.

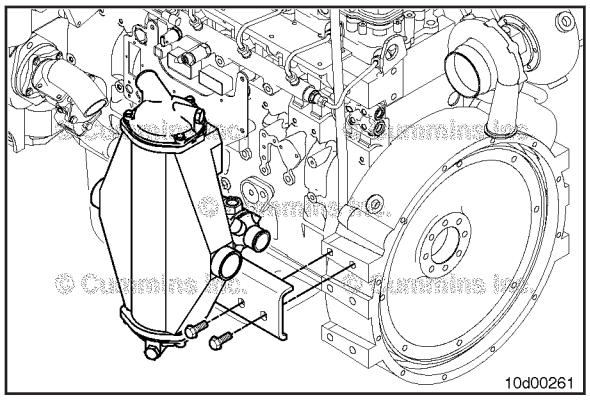

Install

QSL Engines

Loosely install the aftercooler assembly to the flywheel housing first using two mounting capscrews.

To buy Cummins Parts and Service Manuals, Training Guides, or Tools go to our website at https://store.cummins.com

Install the upper capscrews first.

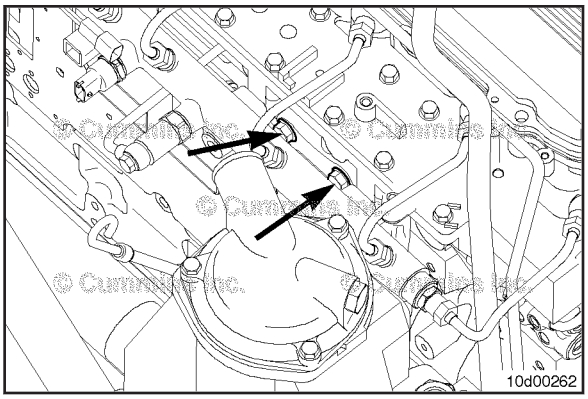

Install the aftercooler to bracket mounting capscrews.

Tighten all capscrews.

Torque Value:
Bracket to Flywheel Housing 100 N•m [74 ft-lb]

Torque Value:
Bracket to Cylinder Head 44 N•m [32 ft-lb]

Torque Value:
Aftercooler to Bracket 35 N•m [26 ft-lb]

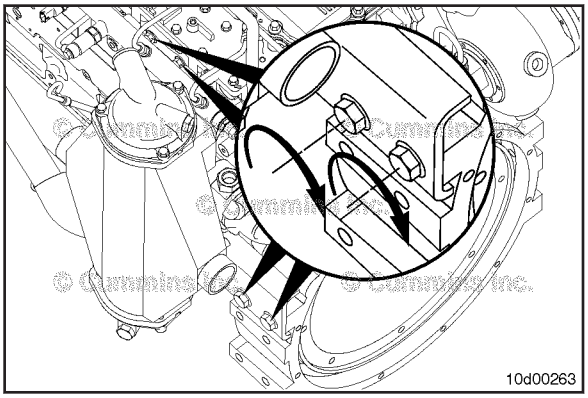

QSC Engines

WARNING
This component or assembly weighs greater than 23 kg [50 lb]. To prevent serious personal injury, be sure to have assistance or use appropriate lifting equipment to lift this component or assembly.

Attach a lifting strap and use a suitable hoist to lift the aftercooler assembly into place. Slide the assembly onto the lower support bracket and install the lower mounting capscrews.

Tighten the capscrews.

Torque Value: 35 N•m [26 ft-lb]

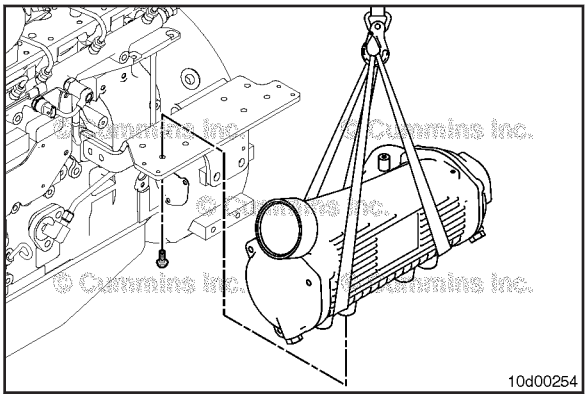

Install the upper bracket to the aftercooler mounting capscrews. Tighten all of the upper bracket mounting capscrews finger-tight.

Tighten the bracket to the cylinder block mounting capscrews.

Torque Value: 44 N•m [32 ft-lb]

Tighten the bracket to the aftercooler mounting capscrews.

Torque Value: 35 N•m [26 ft-lb]

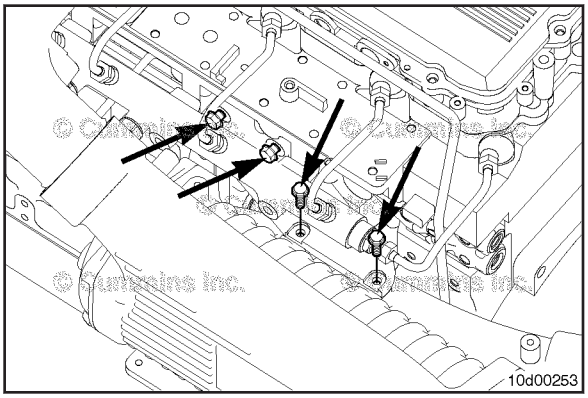

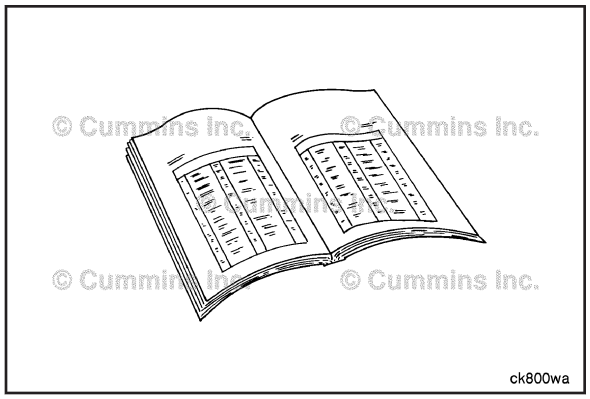

Finishing Steps

QSL Engines

WARNING

Batteries can emit explosive gases. To reduce the possibility of personal injury, always ventilate the compartment before servicing the batteries. To reduce the possibility of arcing, remove the negative (-) battery cable first and attach the negative (-) battery cable last.

- Connect the aftercooler air inlet connection to the turbocharger.
- Install the aftercooler seawater discharge to marine gear cooler hose and tighten the hose clamps.
- If removed, install the aftercooler air discharge to the intake air connection.
- Tighten the aftercooler top and bottom air connection hose clamps.
- Connect the batteries. Refer to Procedure 013-009 in Section 4.
- Open the sea water supply and return valves. See equipment manufacturer service information.
- Open the fuel supply and return valves. See equipment manufacturer service information.
- Operate the engine and check for leaks.

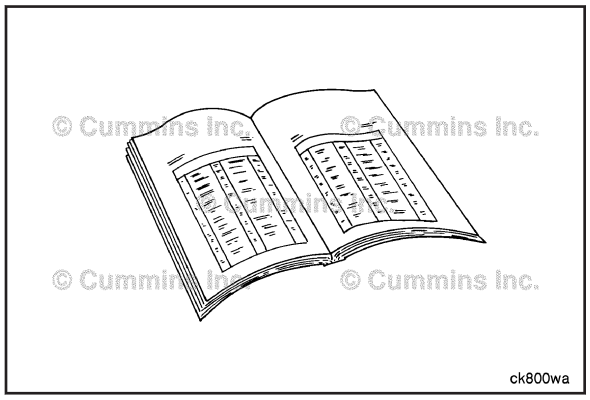

QSC Engines

WARNING

Batteries can emit explosive gases. To reduce the possibility of personal injury, always ventilate the compartment before servicing the batteries. To reduce the possibility of arcing, remove the negative (-) battery cable first and attach the negative (-) battery cable last.

- Open the sea water supply and return valves. See equipment manufacturer service information.
- Connect the batteries. Refer to Procedure 013-009 in Section 4.
- Operate the engine and check for leaks.

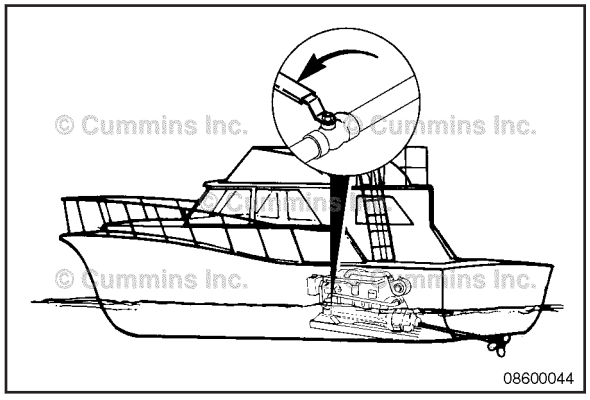

Flush

CAUTION

Zinc plugs expand and can break off during removal. Inspect the zinc plug to make sure it is in one piece. If not, it must be replaced with a new zinc plug, and the broken pieces must be retrieved from the aftercooler to prevent damage to components downstream in the sea water system

Shut OFF the sea water inlet valve on the vessel hull, if equipped.

To buy Cummins Parts and Service Manuals, Training Guides, or Tools go to our website at https://store.cummins.com

Remove the aftercooler assembly zinc anodes (1) and drain the sea water from the aftercooler assembly.

Disconnect the sea water inlet and outlet connections.

Typical hose connections are shown.

Refer to Procedure 100-002 in Section E.

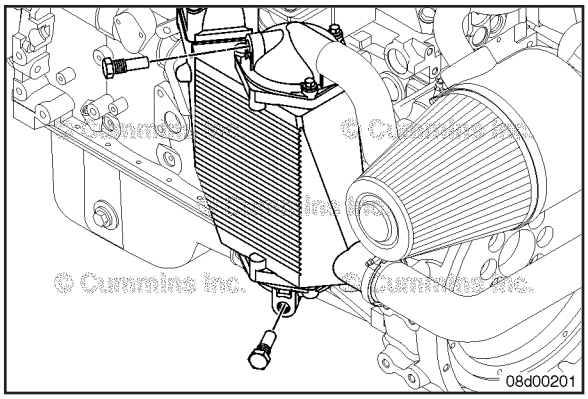

Use clean water to back flush all the debris from the cooler.

Make sure the debris flushed from the cooler does **not** enter the water supply hoses.

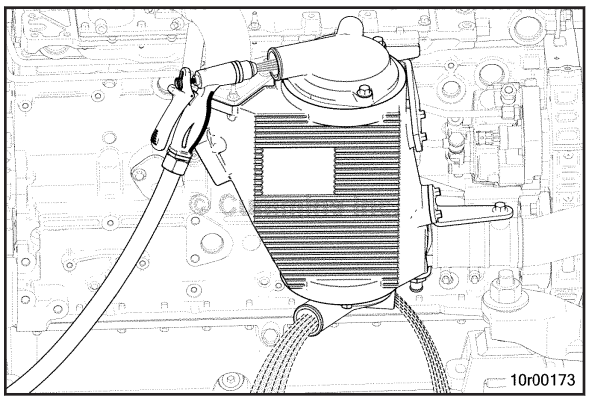

Install two zinc anodes and sea water hose connections.

Inspect and install the zinc plugs in the aftercooler assembly. Refer to Procedure 008-059 in Section 4.

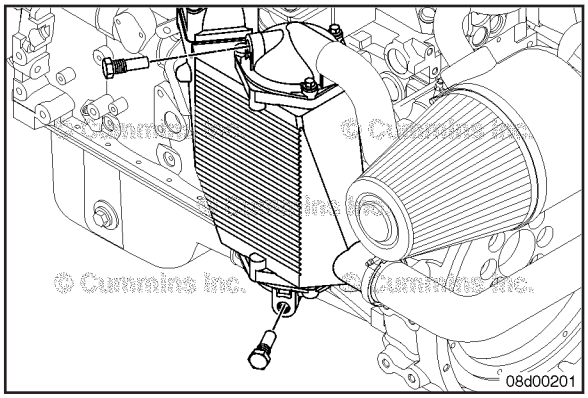

Open the sea water valve on the vessel hull, if closed.

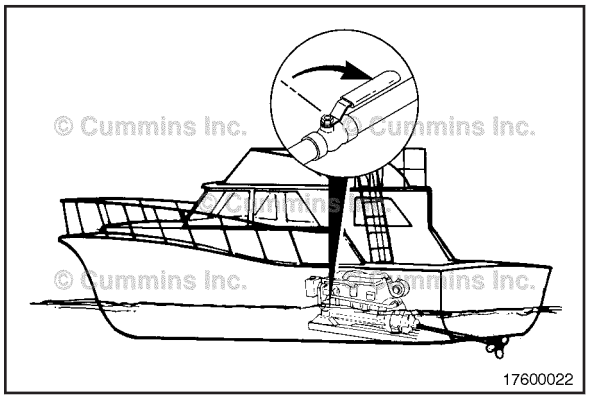

Notes

Section 9 - Maintenance Procedures at 2000 Hours or 4 Years

Section Contents

Page
Cooling System 9-1
Drain....9-1
Fill....9-2
Flush....9-4
Maintenance Procedures - Overview 9-1
General Information....9-1
Vibration Damper, Viscous 9-8
Finishing Steps....9-8
Maintenance Check....9-8
Preparatory Steps....9-8

To buy Cummins Parts and Service Manuals, Training Guides, or Tools go to our website at https://store.cummins.com

This Page Left Intentionally Blank

Maintenance Procedures - Overview

General Information

All maintenance checks and inspections listed in previous maintenance intervals **must** also be performed at this time, in addition to those listed under this maintenance interval.

Cooling System

Drain

WARNING
Do not remove the pressure cap from a hot engine. Wait until the coolant temperature is below 50°C [120°F] before removing the pressure cap. Heated coolant spray or steam can cause personal injury.

Remove the pressure cap.

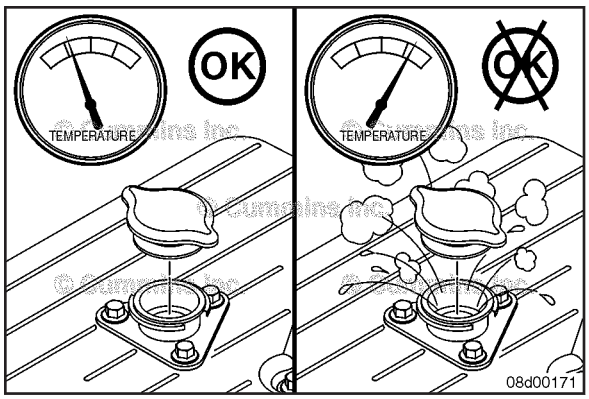

WARNING
Coolant is toxic. Keep away from children and pets. If not reused, dispose of in accordance with local environmental regulations.

A drain pan with a capacity of 19 liters [5 gal] will be adequate for most applications.

Drain the cooling system by opening the drain valve on the radiator and removing the plug in the bottom of the water inlet hose.

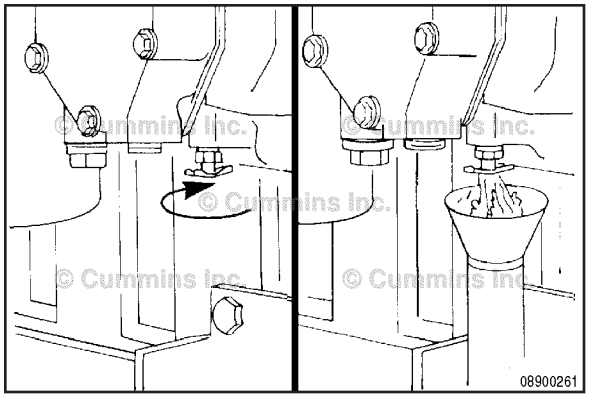

Check for damaged hoses and loose or damaged hose clamps. Replace as required.

Check the radiator for leaks, damage, and buildup of dirt.

Clean and replace as required.

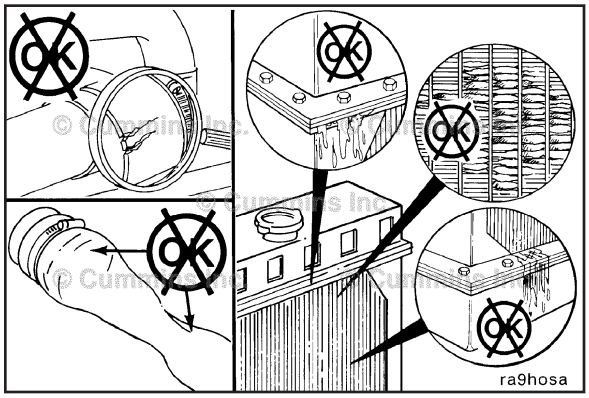

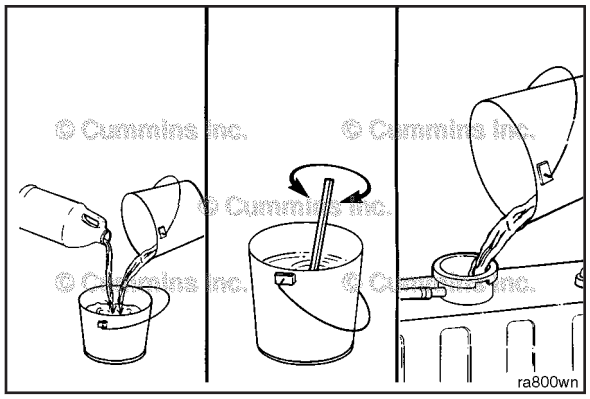

Fill

⚠CAUTION⚠
To avoid engine damage, the system must be filled properly to reduce the possibility of air locks. During filling, air must be vented from the engine coolant passages. Wait 2 to 3 minutes to allow air to be vented; then add mixture to bring the level to the top.

⚠CAUTION⚠
Never use water alone for coolant. Damage from corrosion can be the result of using water alone for coolant.

The system has a designed fill rate of 19 liters per minute [5 gal per minute].

Use a mixture of 50 percent water and 50 percent ethylene glycol or propylene glycol antifreeze to fill the cooling system.

Marine Engine Coolant Capacity

	liters		U.S.gal
Engine only	11.1	MAX	2.9
Engine and heat exchanger	29	MAX	7.7

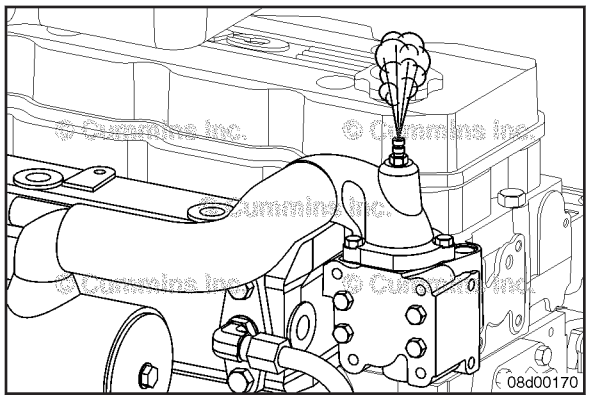

Marine engines **must** be vented at the coolant outlet housing and at the rear of the expansion tank during filling.

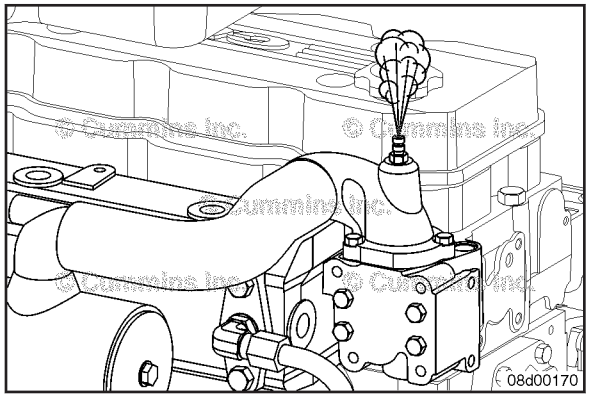

⚠CAUTION⚠
To avoid engine damage, the system must be filled properly to reduce the possibility of air locks. During filling, air must be vented from the engine coolant passages. Wait 2 to 3 minutes to allow air to be vented; then add coolant mixture to bring the level to the top.

⚠CAUTION⚠
Never use water alone for coolant. Damage from corrosion can be the result of using water alone for coolant.

Open all engine mounted and remote heater petcocks.

To buy Cummins Parts and Service Manuals, Training Guides, or Tools go to our website at https://store.cummins.com

Fill the engine with the correct coolant.

Use a mixture of 50 percent water and 50 percent ethylene glycol or propylene glycol antifreeze to fill the cooling system. Refer to Cummins® Coolant Requirements and Maintenance, Bulletin 3666132.

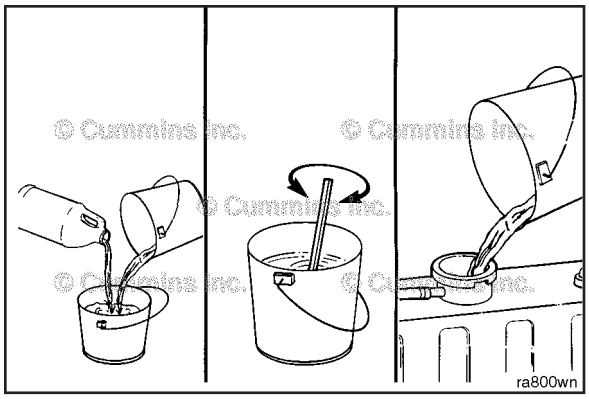

Fill the engine until coolant is visible from the keel-cooled thermostat housing.

Close the aftercooler and remote mounted heater petcocks.

NOTE: The timing of this action will depend on the height of the petcocks in the cooling system.

Continue to fill the system until the coolant expansion tank is filled to the proper level and the low coolant level sensor is covered.

Start the engine and monitor the coolant level and the low coolant alarm until all air is purged from the cooling system. Operate the engine for 5 minutes with the pressure cap removed; do **not** exceed 50°C [122°F].

Check the coolant level again after the engine is shut down. Fill if needed.

Install the pressure cap.

Start the engine and monitor the low coolant alarm during initial startup.

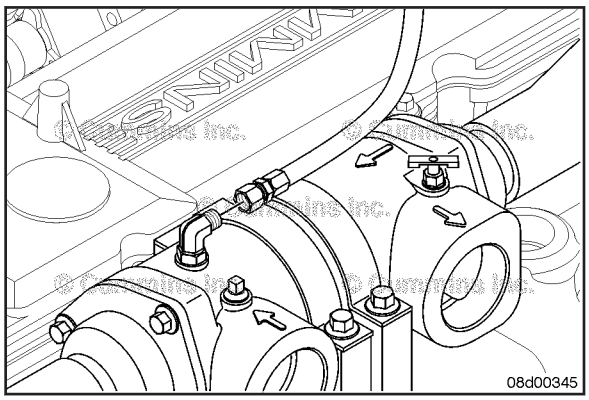

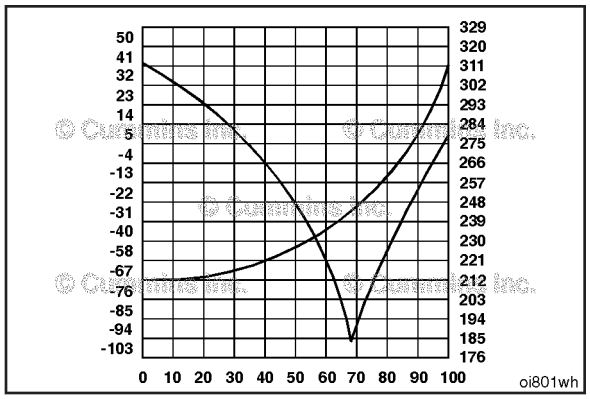

WARNING

Do not stand near the surge tank or radiator while operating the engine with the pressure cap off. If the vehicle is equipped with a fill door on side of the surge tank, keep it closed due to coolant expansion.

Low silicate antifreeze **must** be mixed with quality water at a 50/50 ratio (40 to 60 percent working range). A 50/50 mixture of antifreeze and water gives a -37°C [-34°F] freeze point and a boiling point of 109°C [228°F].

The actual lowest freeze point of ethylene glycol antifreezes is at 68 percent, The use of higher concentrations of antifreeze will raise the freeze point of the solution and increase the possibility of a silicate gel problem.

Remove the pressure cap.

Fill the cooling system to the capacity or level stated in the OEM service manual using a mixture of 50 percent water and 50 percent ethylene glycol or propylene glycol antifreeze.

Open all coolant flow valves to equipment heating systems. See the OEM service manual for valve locations.

Wait 2 to 3 minutes, without starting the engine, to allow the coolant level to stabilize.

Add a 50/50 mixture to bring the coolant level back to FULL.

Turn all cab heater switches to HIGH in order to allow maximum coolant flow through heater core(s). The blower does **not** have to be on.

With the pressure cap off:

- Operate the engine at LOW Idle for 2 minutes.
- Shut the engine OFF and add coolant to bring the level back to FULL, using a 50/50 mixture.

With the pressure cap off:

- Operate the engine at LOW IDLE for 1 minute to allow adequate oil pressure to build throughout the engine.

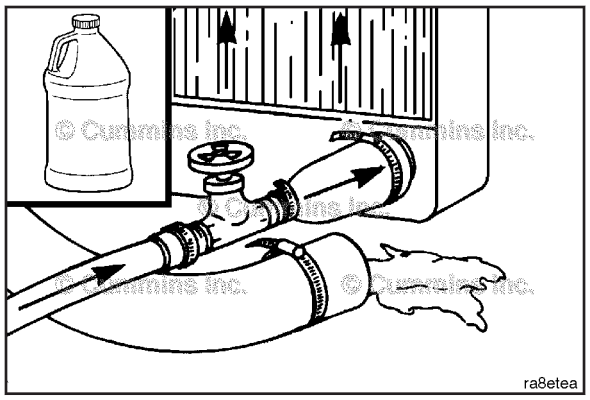

Flush

WARNING

Do not use caustic cleaners in the cooling system. Aluminum components will be damaged.

The cooling system **must** be clean to work correctly and to eliminate buildup of harmful chemicals.

To buy Cummins Parts and Service Manuals, Training Guides, or Tools go to our website at https://store.cummins.com

Fleetguard® Restore™ is a heavy-duty cooling system cleaner that removes corrosion, silica gel, and other deposits. The performance of Fleetguard® Restore™ is dependent on time, temperature, and concentration levels. An extremely scaled or flow-restricted system, for example, can require higher concentrations of cleaners, higher temperatures, longer cleaning times, or the use of Restore Plus™. Up to twice the recommended concentration levels of Fleetguard® Restore™ can be used safely. Fleetguard® Restore Plus™ **must** be used **only** at its recommended concentration level. Extremely scaled or fouled systems can require more than one cleaning.

⚠CAUTION⚠
Fleetguard® Restore™ contains no antifreeze. Do not allow the cooling system to freeze during the cleaning operation.

⚠CAUTION⚠
Opening the manual bleed valve on applicable installations is critical. Failure to do so can result in engine damage.

NOTE: Some applications can have a manual bleed valve that is required to be opened to properly fill the system. The upper radiator pipe is a common location for bleed valves. The illustration is for reference **only**.

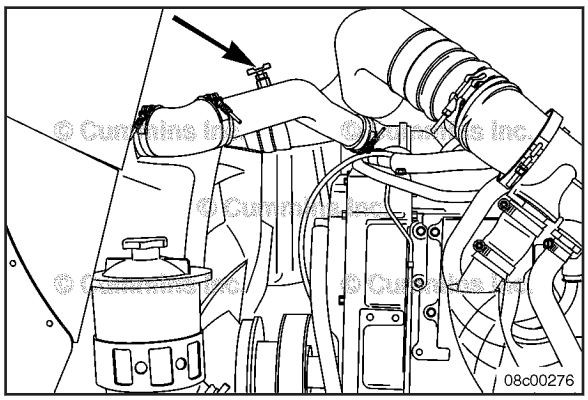

If applicable, open the manual bleed valve before filling the cooling system.

Once filled, close the manual bleed valve.

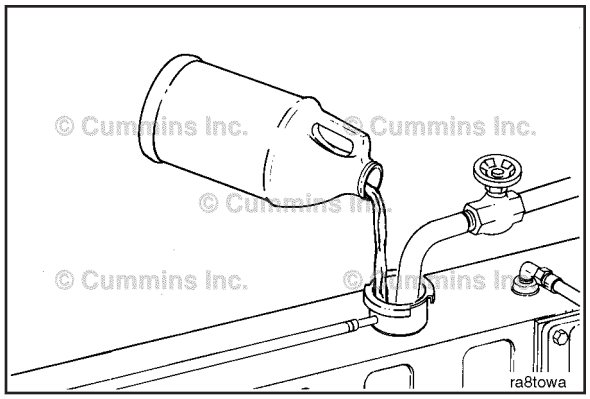

WARNING
Do not stand near the surge tank or radiator while operating the engine with the pressure cap off. If the vehicle is equipped with a fill door on the side of the surge tank, keep it closed due to coolant expansion.

CAUTION
Fleetguard® Restore™ contains no antifreeze. Do not allow the cooling system to freeze during the cleaning operation.

CAUTION
Opening the manual bleed valve on applicable installations is critical. Failure to do so can result in engine damage.

CAUTION
The system must be filled properly to prevent air locks or serious engine damage can result. During filling, air must be purged from the engine coolant passages. Make sure to open the petcock on the aftercooler for aftercooled engines. Wait 2 to 3 minutes to allow the air to be vented; then add the mixture to bring the coolant level to the top.

NOTE: Some applications can have a manual bleed valve that is required to be opened to properly fill the system. The upper radiator pipe is a common location for bleed valves. The illustration is for reference **only.**

If applicable, open the manual bleed valve before filling the cooling system.

Once filled, close the manual bleed valve.

NOTE: Add 3.8 liters [1 gal] of Fleetguard®, Restore™, Restore Plus™, or equivalent for each 38 to 57 liters [10 to 15 gal] of cooling system capacity.

Fill the cooling system to the capacity or level stated in the OEM service manual.

Use plain water.

Open all coolant flow valves to equipment heating systems. See the OEM service manual for valve locations.

Wait 2 to 3 minutes, without starting the engine, to allow the coolant level to stabilize.

Add plain water to bring the level back to FULL.

Turn all cab heater switches to HIGH in order to allow maximum coolant flow through the heater core(s). The blower does **not** have to be ON.

With the pressure cap off:

- Operate the engine at LOW IDLE for 2 minutes.
- Shut the engine OFF and add plain water to bring the level back to FULL.

With the pressure cap off:

- Operate the engine at LOW IDLE for 1 minute to allow adequate oil pressure to build throughout the engine.
- Operate the engine at HIGH IDLE until the thermostat opens.

Operate the engine at low idle 2 minutes before shutting it down. This allows adequate cool down of pistons, cylinders, bearings, and turbocharger components.

Shut the engine OFF and check the coolant level according to the OEM service manual recommendations and add coolant, if necessary, to bring it back to the FULL level.

Install the pressure cap.

To buy Cummins Parts and Service Manuals, Training Guides, or Tools go to our website at https://store.cummins.com

⚠WARNING⚠
Do not remove the pressure cap from a hot engine. Wait until the coolant temperature is below 50°C [120°F] before removing the pressure cap. Heated coolant spray or steam can cause personal injury.

⚠WARNING⚠
Coolant is toxic. Keep away from children and pets. If not reused, dispose of in accordance with local environmental regulations.

Operate the engine at normal operating temperatures, at least 85°C [185°F], for 1 to 1 ½ hours.

Shut the engine OFF allow to cool to 50°C [122°F], and drain the cooling system.

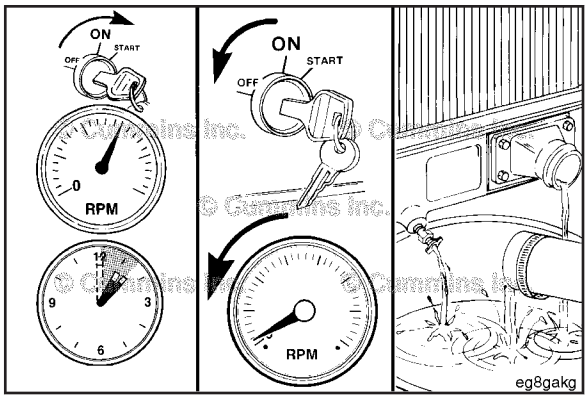

⚠WARNING⚠
Do not stand near the surge tank or radiator while operating engine with the pressure cap OFF. If the vehicle is equipped with fill door on the side of the surge tank, keep it closed due to coolant expansion.

Remove the pressure cap.

Fill the cooling system to the capacity or level stated in the OEM service manual.

Open all coolant flow valves to equipment heating systems. See the OEM service manual for valve locations.

Wait 2 to 3 minutes without starting the engine to allow the system to naturally purge entrained air and the coolant level to stabilize.

Add plain water to bring the level back to FULL.

Turn all cab heater switches to HIGH in order to allow maximum coolant flow through the heater core(s). The blower **must** be turned ON.

With the pressure cap off:

- Operate the engine at LOW IDLE for 2 minutes.
- Shut the engine OFF and add plain water to bring the level back to FULL.

With the pressure cap off:

- Operate the engine al LOW Idle for 1 minute to allow adequate oil pressure to build throughout the engine.
- Operate the engine at HIGH Idle until the thermostat opens.

Continue to operate the engine at HIGH idle for 5 minutes with the coolant temperature above 85°C [185°F].

Allow the engine to idle 2 minutes before shutting it down. This allows adequate cool down of pistons, cylinders, bearings, and turbocharger components.

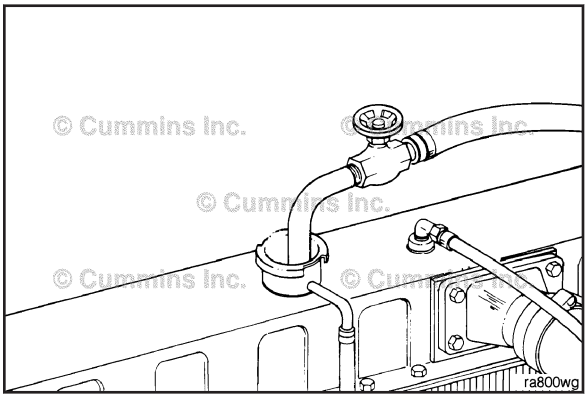

© Cummins Inc.

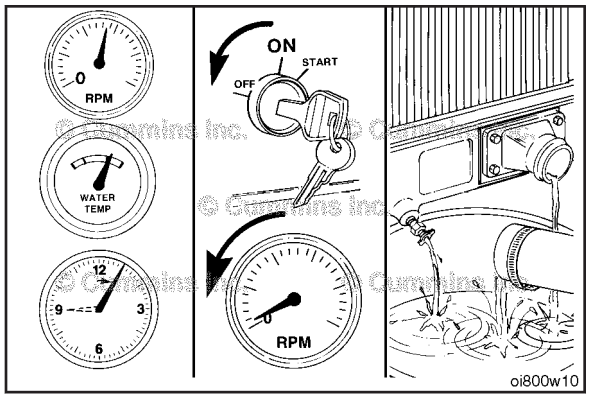

⚠WARNING⚠
Do not remove the pressure cap from a hot engine. Wait until the coolant temperature is below 50°C [120°F] before removing the pressure cap. Heated coolant spray or steam can cause personal injury.

⚠WARNING⚠
Coolant is toxic. Keep away from children and pets. If not reused, dispose of in accordance with local environmental regulations.

Shut the engine OFF. Allow it to cool to 50°C [122°F], and drain the cooling system.

If the water being drained is still dirty, the system **must** be flushed again, until the drained water is clean.

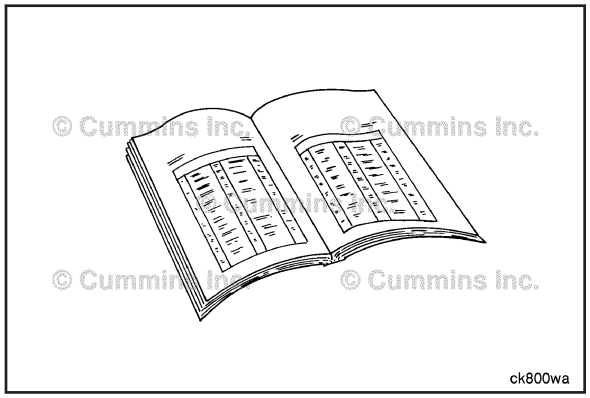

Vibration Damper, Viscous

Preparatory Steps

- Remove the belt guard, if equipped. Refer to Procedure 008-001 in Section A.

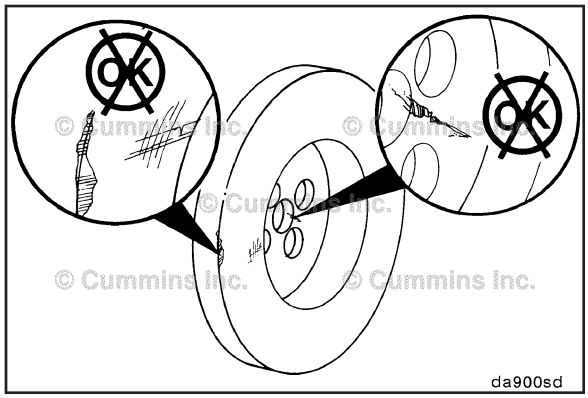

Maintenance Check

Check the mounting web for cracks.

Check the housing for dents or raised surfaces.

Replace the damper if any such damage is identified.

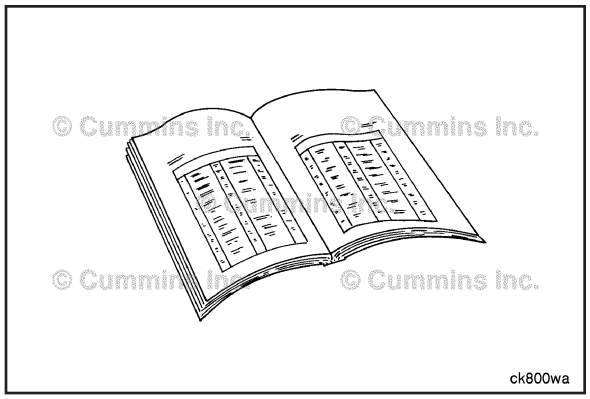

Finishing Steps

- Install the belt guard. Refer to Procedure 008-001 in Section A.

© Cummins Inc.

Section A - Adjustment, Repair, and Replacement

Section Contents

Page
Air Cleaner Assembly (Engine-Mounted) A-8
Clean....A-9
General Information....A-8
Install....A-10
Remove....A-9
Belt Guard A-4
Install....A-4
Remove....A-4
Belt Tensioner, Automatic (Water Pump) A-6
Finishing Steps....A-8
Inspect for Reuse....A-7
Install....A-8
Preparatory Steps....A-6
Remove....A-7
Charging System Alternator A-11
Finishing Steps....A-13
Install....A-12
Preparatory Steps....A-11
Remove....A-11
Closed-Crankcase Ventilation System Filter A-1
Clean and Inspect for Reuse....A-2
Finishing Steps....A-3
General Information....A-1
Initial Check....A-1
Install....A-3
Preparatory Steps....A-1
Remove....A-2
Marine Vibration Isolator A-19
Finishing Steps....A-23
General Information....A-19
Initial Check....A-19
Inspect for Reuse....A-22
Install....A-23
Preparatory Steps....A-21
Remove....A-22
Propeller Shaft A-16
Cleaning Machine Operation....A-16
General Information....A-16
Preparatory Steps....A-16
Specifications....A-18
Sea Water Pipe A-4
Finishing Steps....A-6
Install....A-5
Preparatory Steps....A-4
Remove....A-5
Starting Motor A-13
Finishing Steps....A-15
Initial Check....A-13
Install....A-14
Preparatory Steps....A-14
Remove....A-14

To buy Cummins Parts and Service Manuals, Training Guides, or Tools go to our website at https://store.cummins.com

This Page Left Intentionally Blank

Closed-Crankcase Ventilation System Filter

General Information

This procedure applies to Marine Applications **only**.

Initial Check

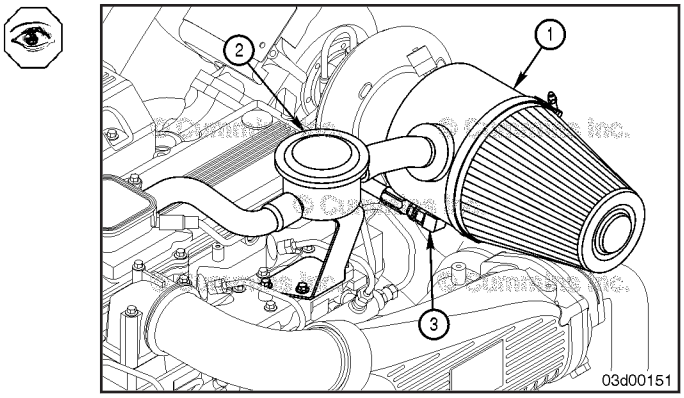

The closed-crankcase system has three major parts.

1. Air cleaner assembly (filters the incoming air) and a oil blow-by filter element called a coalescing filter.
2. Vacuum brake assembly; this keeps the engine from drawing oil directly into the turbocharger if the air cleaner is plugged.
3. Closed-crankcase drain plumbing; this includes the drain hoses and check valve. The check valve prevents crankcase pressure from flowing backwards in the air cleaner.

This procedure includes the closed-crankcase ventilation system filter **only**. Refer to Procedure 010-013 (Air Cleaner Assembly (Engine Mounted)) in Section A for instructions on removal, clean, and inspect, and installation of other components of the complete assembly.

Check the restriction gauge on the air filter assembly. If the gauge indicator is red, the air filter element **must** be cleaned or replaced. Refer to Procedure 010-013 (Air Cleaner Assembly (Engine Mounted)) in Section 6.

Preparatory Steps

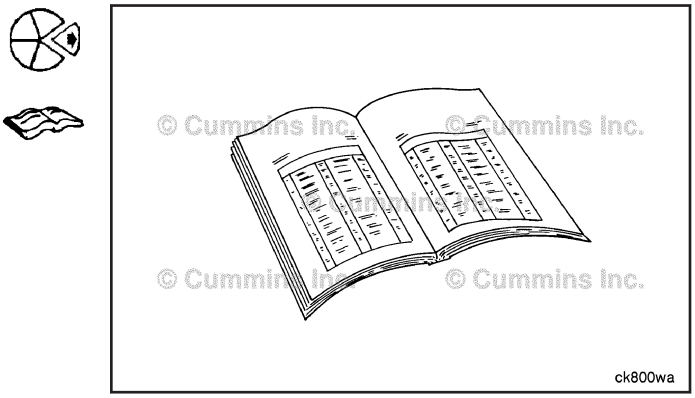

- Remove the air filter. Refer to Procedure 010-013 (Air Cleaner Assembly (Engine Mounted)) in Section A.

To buy Cummins Parts and Service Manuals, Training Guides, or Tools go to our website at https://store.cummins.com

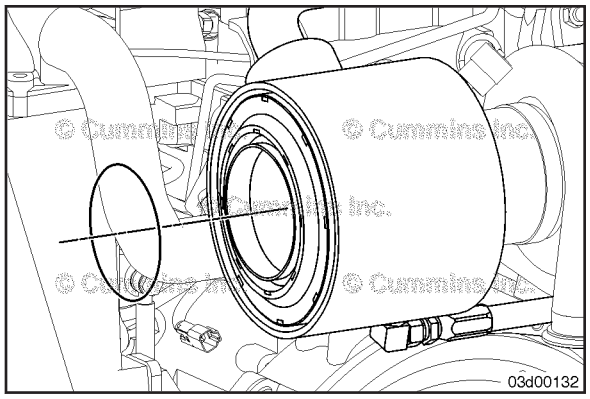

Remove

Remove the o-ring from the closed-crankcase breather element assembly.

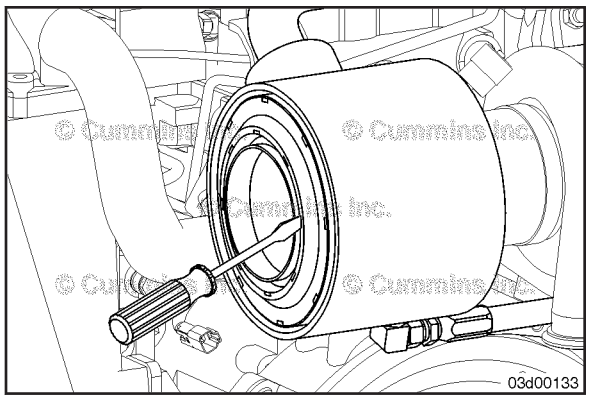

Use a screwdriver in the notches around the element to break the seal and remove the element.

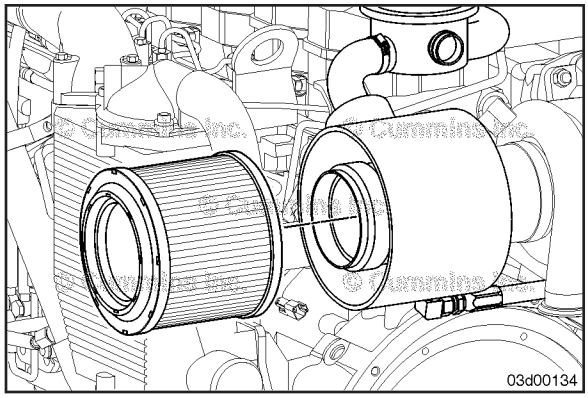

Remove the element from the canister.

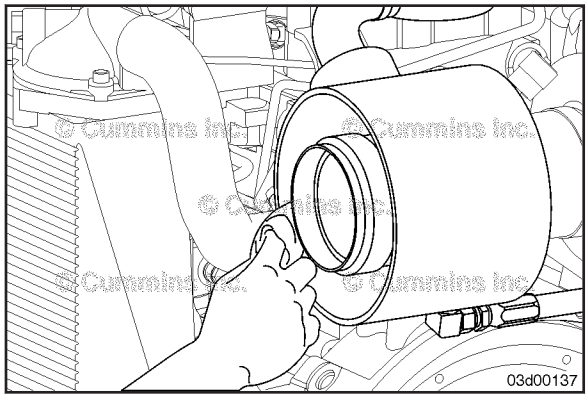

Clean and Inspect for Reuse

Use a clean cloth to wipe the inside of the canister clean.

To buy Cummins Parts and Service Manuals, Training Guides, or Tools go to our website at https://store.cummins.com

NOTE: The filter will normally be oil soaked. Look for buildup of moisture condensation, sludge, or blockage of the element. Replace the element if it is dirty and oil soaked.

Inspect the canister for damage.

Inspect the o-rings for cuts or other damage.

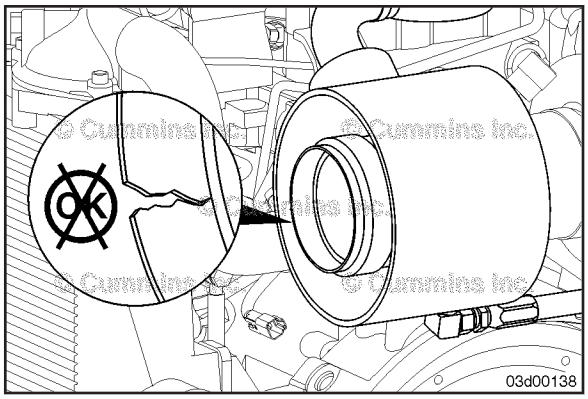

Install

The top of the filter is marked with “TOP” on the outer rim.

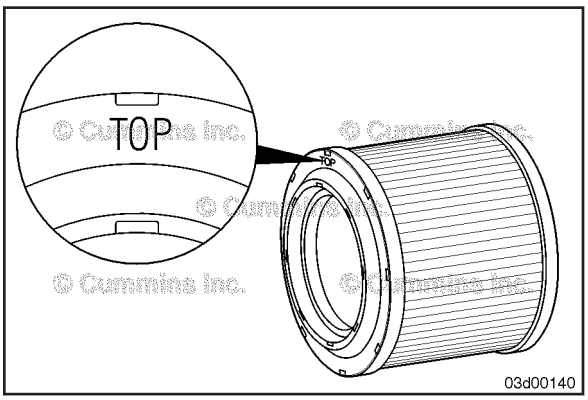

Install the clean filter into the canister.

Install the o-ring.

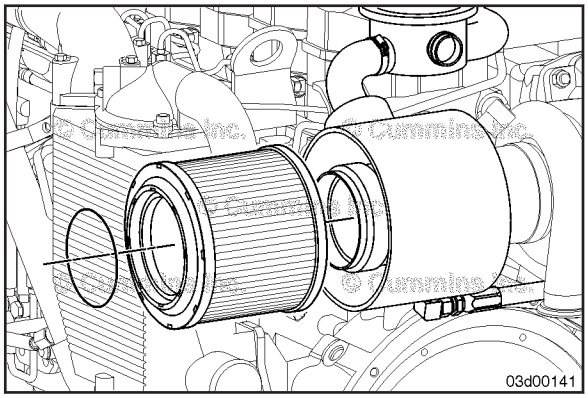

Finishing Steps

- Install the air filter. Refer to Procedure 010-013 (Air Cleaner Assembly (Engine Mounted)) in Section A.
- Operate the engine and check for leaks.

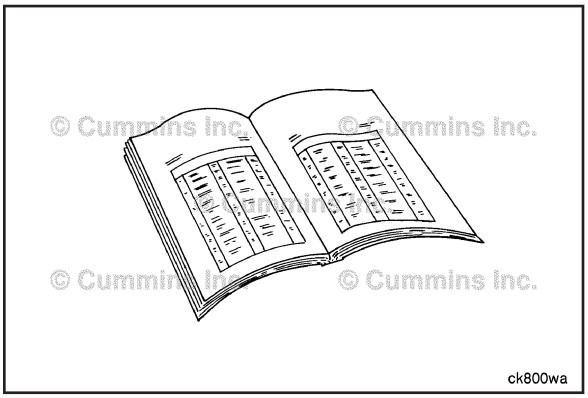

To buy Cummins Parts and Service Manuals, Training Guides, or Tools go to our website at https://store.cummins.com

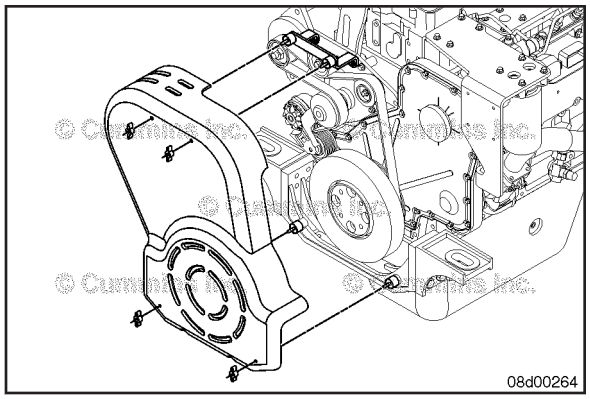

Belt Guard

Remove

Remove the four fasteners on the belt guard.

Remove the belt guard.

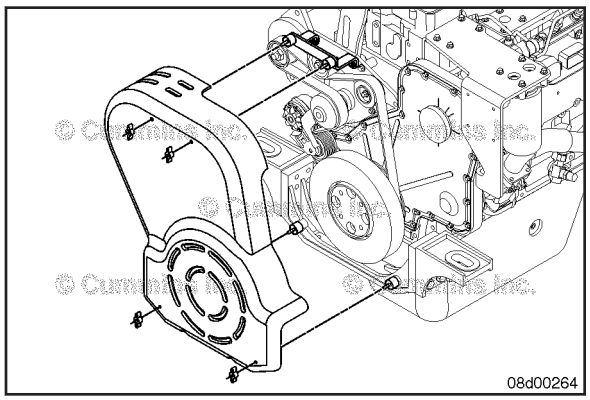

Install

Align the belt guard holes and install the belt guard.

Install and tighten the wing nuts finger tight.

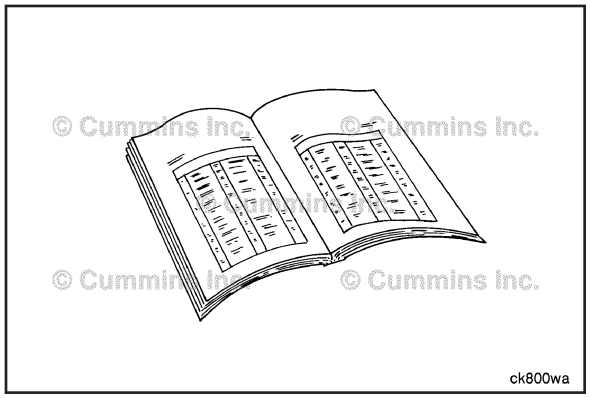

Sea Water Pipe

Preparatory Steps

WARNING

Batteries can emit explosive gases. To reduce the possibility of personal injury, always ventilate the compartment before servicing the batteries. To reduce the possibility of arcing, remove the negative (-) battery cable first and attach the negative (-) battery cable last.

- Disconnect the batteries. Refer to Procedure 013-009 in Section 13.
- Drain the sea water system. Refer to Procedure 010-005 in Section 10.

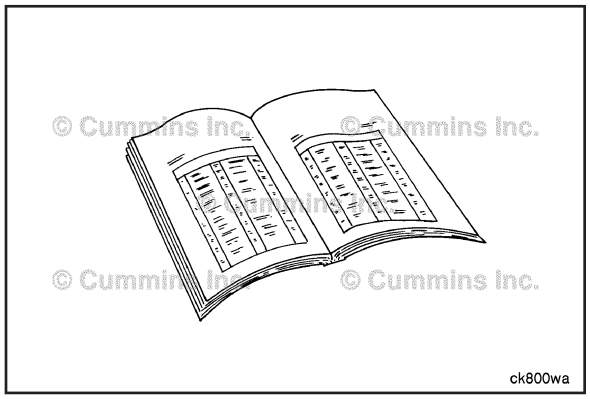

WARNING

Batteries can emit explosive gases. To reduce the possibility of personal injury, always ventilate the compartment before servicing the batteries. To reduce the possibility of arcing, remove the negative (-) battery cable first and attach the negative (-) battery cable last.

- Disconnect the batteries. Refer to Procedure 013-009 in Section 4.
- Drain the sea water system. Refer to Procedure 010-005 in Section 6.

To buy Cummins Parts and Service Manuals, Training Guides, or Tools go to our website at https://store.cummins.com

Remove

Remove the seawater pipe from the sea water pump to the marine gear oil cooler and fuel cooler assembly.

Remove the o-rings and discard.

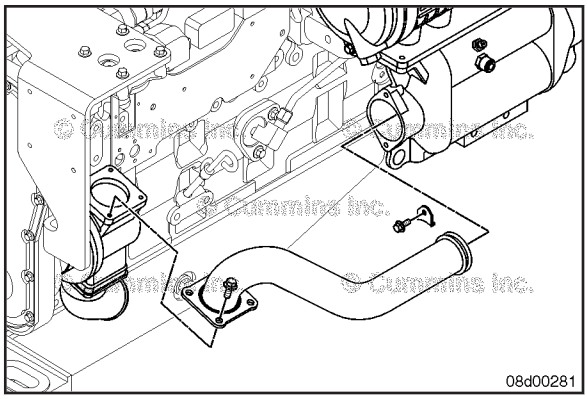

Remove the seawater pipe from the marine gear oil cooler and fuel cooler assembly to the aftercooler.

Remove the o-rings and discard.

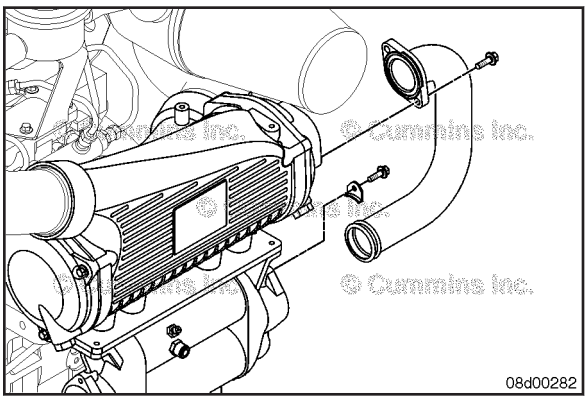

Remove the sea water pipe from the aftercooler to the heat exchanger.

Remove the o-rings and discard.

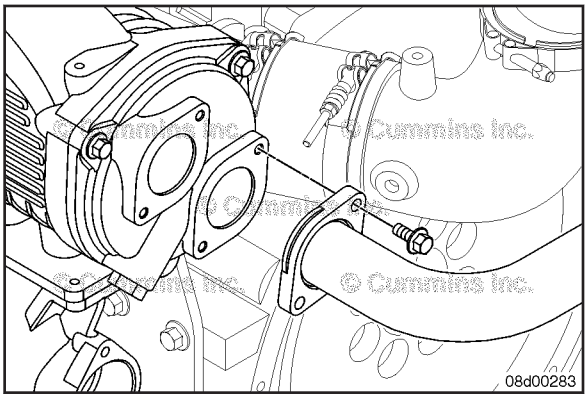

Install

Install new o-rings on the sea water pump to marine gear oil cooler assembly. Apply Lubriplate™ multi-purpose lubricant to the o-rings.

Install the sea water pipe.

Tighten the capscrews on the sea water pump mounting flange.

Torque Value: 15 N•m [133 in-lb]

Secure the tube to the marine gear oil cooler and fuel cooler assembly using two tube clamps and capscrews. Tighten the capscrews.

Torque Value: 24 N•m [18 ft-lb]

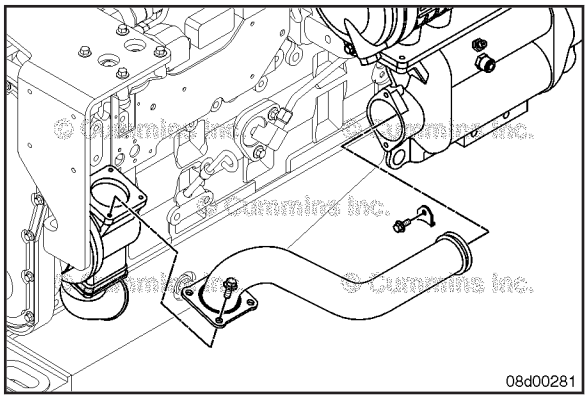

To buy Cummins Parts and Service Manuals, Training Guides, or Tools go to our website at https://store.cummins.com

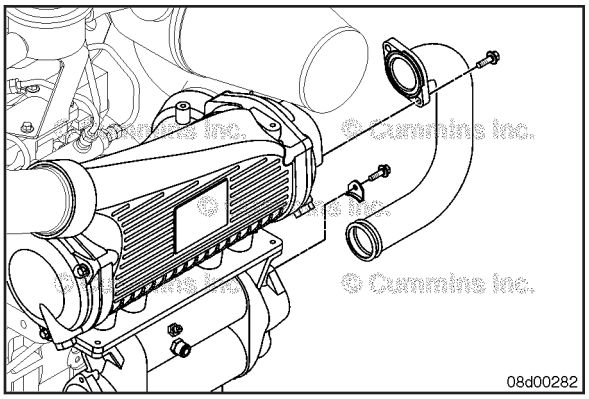

Install new o-rings on the sea water pipe at the marine gear oil cooler to the aftercooler.

Apply Lubriplate™ multi-purpose lubricant to the o-rings.

Install the sea water tube. Tighten the capscrews on the flange end of the tube.

Torque Value: 24 N•m [18 ft-lb]

Tighten the two tube clamps and capscrews.

Torque Value: 24 N•m [18 ft-lb]

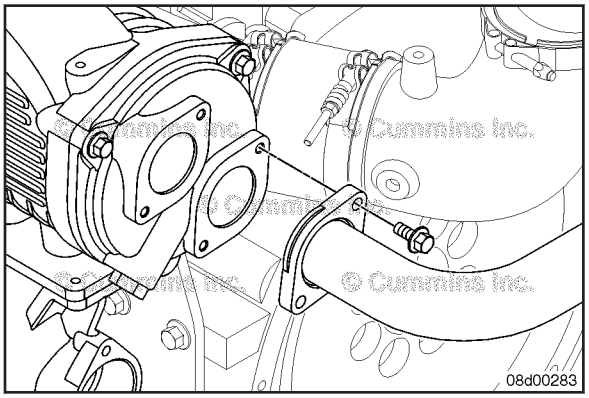

Install new o-rings on the sea water pipe at the aftercooler to the heat exchanger.

Apply Lubriplate™ multi-purpose lubricant to the o-rings.

Install the tube to the aftercooler and heat exchanger.

Tighten the capscrews on the flanges and tube clamps.

Torque Value: 24 N•m [18 ft-lb]

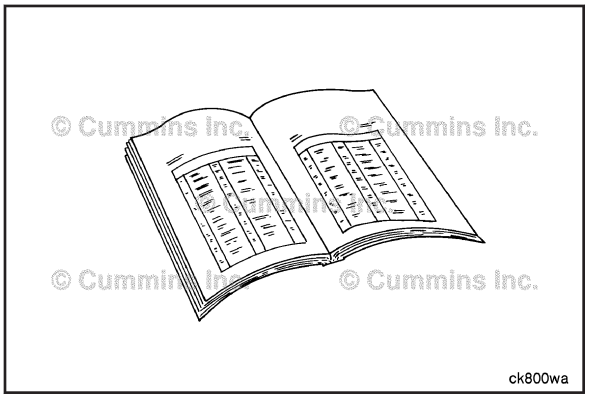

Finishing Steps

- Connect the batteries. Refer to Procedure 013-009 in Section 4.
- Operate the engine and check for leaks.

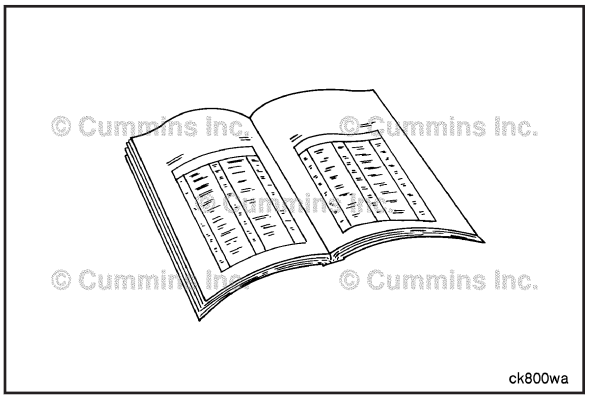

Belt Tensioner, Automatic (Water Pump)

Preparatory Steps

⚠WARNING⚠
Batteries can emit explosive gases. To reduce the possibility of personal injury, always ventilate the compartment before servicing the batteries. To reduce the possibility of arcing, remove the negative (-) battery cable first and attach the negative (-) battery cable last.

Remove

Remove the capscrew and belt tensioner from the bracket.

NOTE: Most belt tensioners are mounted to the water inlet connection. Some belt tensioners are mounted to a separate mounting bracket and use internal fasteners for clearance.

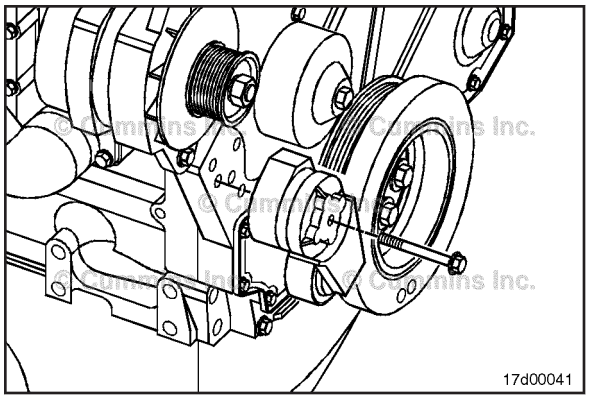

Inspect for Reuse

Inspect the cooling fan drive belt for reuse.

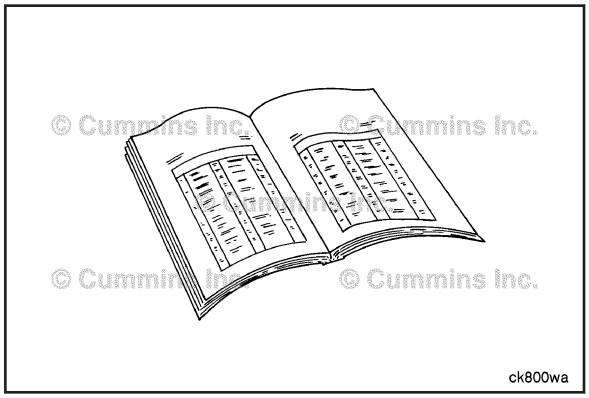

Measure the clearance between the tensioner spring case and the tensioner arm to verify tensioner wear-out and uneven bearing wear. If the clearance at the measurement point 5 exceeds 3 mm [0.12 in], the tensioner is damaged and **must** be replaced as a complete assembly.

Tensioners generally will show a larger clearance gap near the lower portion of the spring case, resulting in the upper portion rubbing against the tensioner arm.

1 Tensioner cap
2 Tensioner arm
3 Spring case
4 Tensioner pulley
5 Clearance gap.

NOTE: Always replace the belt when a tensioner is replaced. However, it is **not always** necessary to replace a tensioner when a belt is replaced.

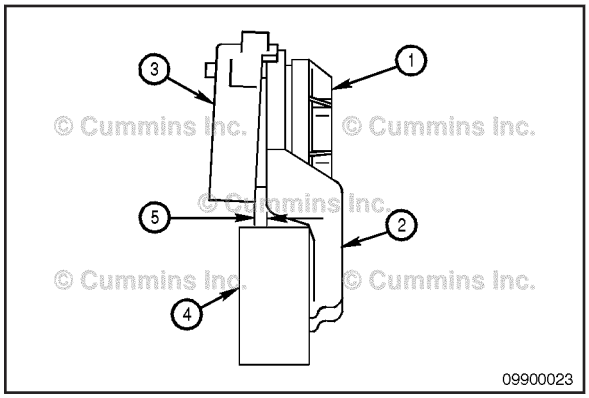

To buy Cummins Parts and Service Manuals, Training Guides, or Tools go to our website at https://store.cummins.com

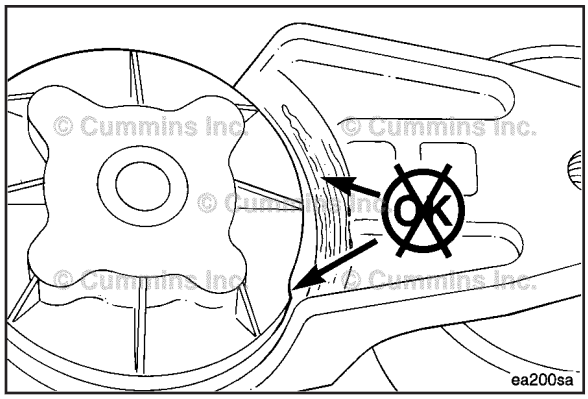

Inspect the tensioner for evidence of the tensioner arm contacting the tensioner cap. If there is evidence of the two areas making contact, the pivot tube bushing has failed and the tensioner **must** be replaced.

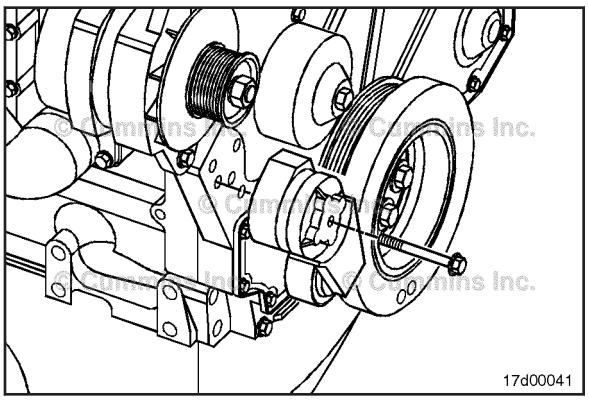

Install

If removed, install the belt tensioner mounting bracket and mounting bracket capscrews.

NOTE: Some belt tensioner mounting brackets use internal fasteners for clearance.

Torque Value: 24 N•m [212 in-lb]

Install the belt tensioner and capscrew.

Torque Value: 43 N•m [32 ft-lb]

Air Cleaner Assembly (Engine-Mounted)

General Information

Some marine engines are equipped with a factory installed closed crankcase breather system which is connected to the engine intake air cleaner. Aftermarket (non-factory installed) closed crankcase breather systems can **not** be installed on Cummins marine engines. Installing such non-factory devices will void the warranty.

The closed crankcase system has three major parts.

1. The air cleaner assembly filters the incoming air and a oil blow-by filter element called a coalescing filter.
2. Vacuum brake assembly; this keeps the engine from drawing oil directly into the turbocharger if the air cleaner is plugged.
3. Closed crankcase drain plumbing; this includes the drain hoses and check valve. The check valve prevents crankcase gasses from flowing backward in the air cleaner.

To buy Cummins Parts and Service Manuals, Training Guides, or Tools go to our website at https://store.cummins.com

Remove

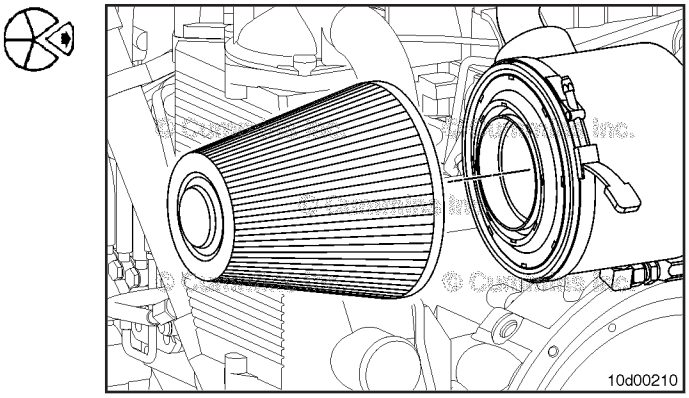

⚠CAUTION⚠
Use caution when disconnecting or removing oil lines, or replacing filters that oil is not drained into the bilge area. Do not drop or throw filter elements into the bilge area. The oil and filters must be discarded in accordance with local environmental regulations.

Release the clamp and remove the air cleaner element.

Remove the turbocharger silencer cone from inside the filter element.

Remove coalescing filter cover plate (1).

Pull out coalescing filter using its wire bail (2).

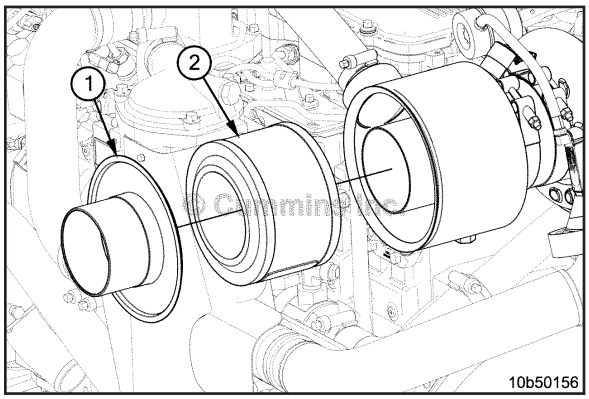

Clean

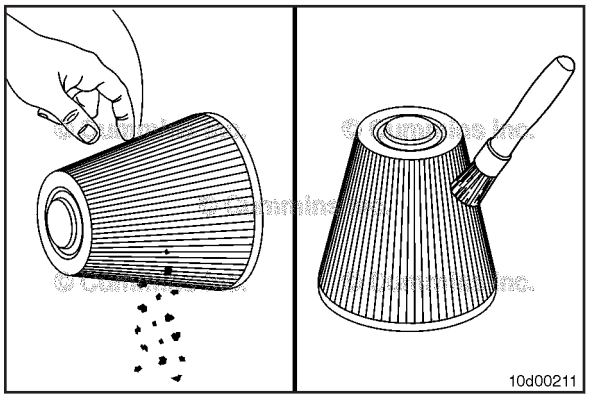

NOTE: It is possible that a filter which is damaged or clogged with soot, due to an exhaust leak, will **not** be able to be cleaned to maximum efficiency. Replacement of the element will be necessary.

Tap the filter element to dislodge any large embedded particles or dirt.

Gently brush the filter element with a soft bristle brush.

To buy Cummins Parts and Service Manuals, Training Guides, or Tools go to our website at https://store.cummins.com

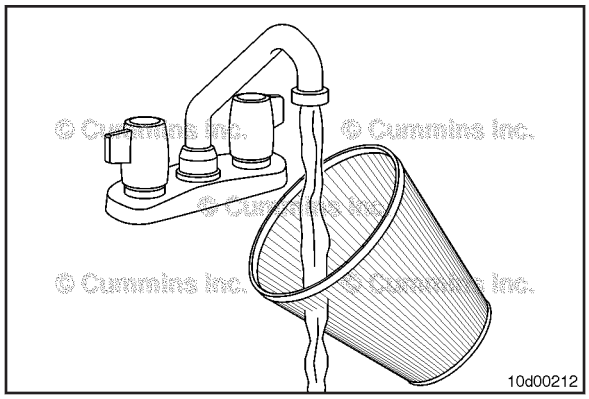

CAUTION
To avoid damage to the components, do not use gasoline, high-pressure water or air, caustic cleaning solutions, or parts-cleaning solvents to clean the air filter.

CAUTION
To avoid damage to the components, do not use compressed air, an open flame or heat dryers to dry the air filter.

NOTE: Always flush from the clean side to the dirty side. This will remove the particles and dirt, and **not** drive it into the air filter.

Rinse the air filter element with low pressure water. Tap water is okay.

After rinsing the air filter, shake off all the excess water and let the filter element air dry.

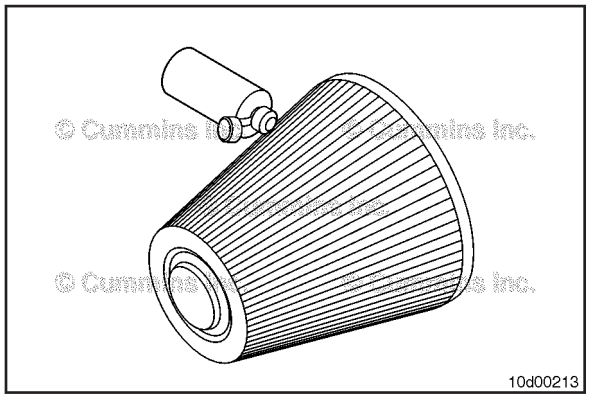

NOTE: Do **not** use automatic transmission fluid, motor oil, diesel fuel, WD-40® lubricant, or any other light weight oil. Use approved filter oil.

After cleaning the air filter, **always** re-oil the filter element with oil service kit, Part Number 3973523. The effectiveness of the air filter is greatly reduced if it is used without oiling. Sparingly squeeze small amounts of oil out of a bottle across the top of each pleat.

Let the oil wick into the filter element for 20 minutes. Then oil any dry areas that are showing.

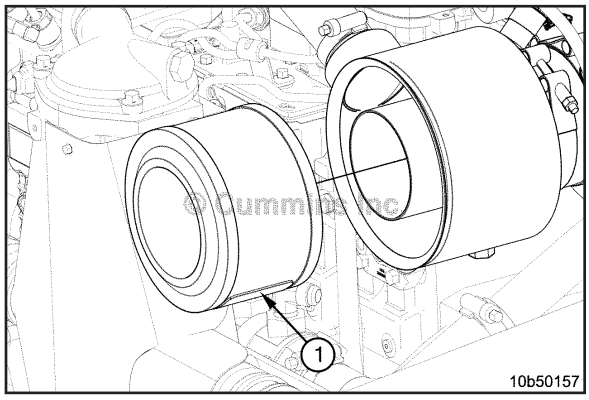

Install

CAUTION
If the square opening is not facing downward, oil will leak out of the air cleaner.

Install the new coalescing filter with the square filter opening (1) facing downward.

Install the turbocharger silencer cone.

Install the o-ring around the outside of the filter base.

Install the filter onto the engine and secure with the clamp.

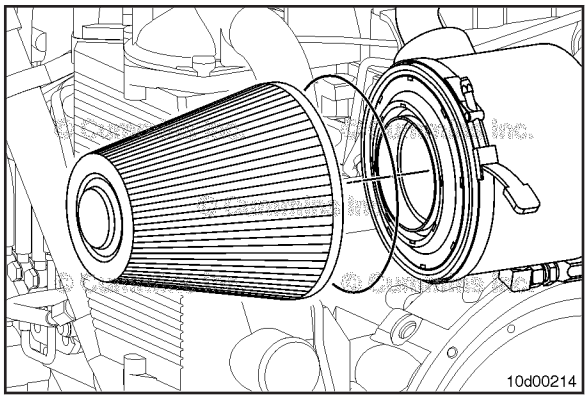

Charging System Alternator

Preparatory Steps

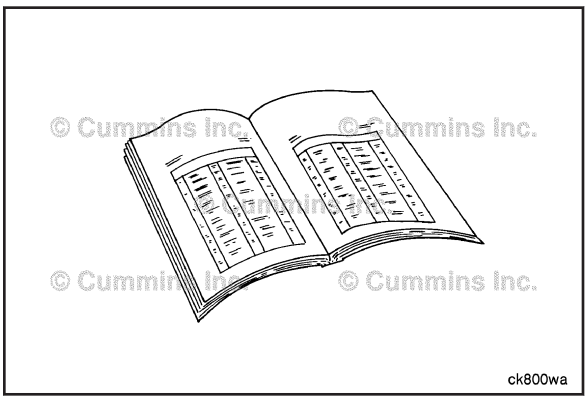

⚠WARNING⚠
Batteries can emit explosive gases. To reduce the possibility of personal injury, always ventilate the compartment before servicing the batteries. To reduce the possibility of arcing, remove the negative (-) battery cable first and attach the negative (-) battery cable last.

Remove and tag all wires and complete the following steps:

- Disconnect the batteries. Refer to Procedure 013-009 in Section 6.
- Disconnect the battery ground cable.
- Remove the belt guard, if equipped. Refer to Procedure 008-001 in Section 8.
- Remove the belt guard. Refer to Procedure 008-001 in Section A.
- Remove the drive belt from the alternator pulley.
- Tag and label wires attached to the alternator.
- Remove the wires attached to the alternator.

Remove

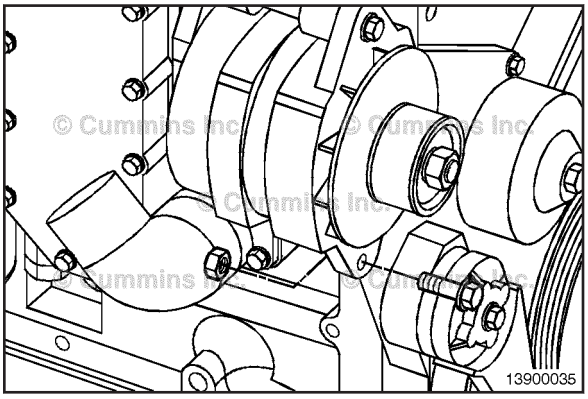

Loosen the alternator link capscrew at the engine mounting location.

Loosen the alternator link capscrew at the alternator.

Loosen the alternator mounting capscrew.

Remove the alternator link capscrew at the alternator.

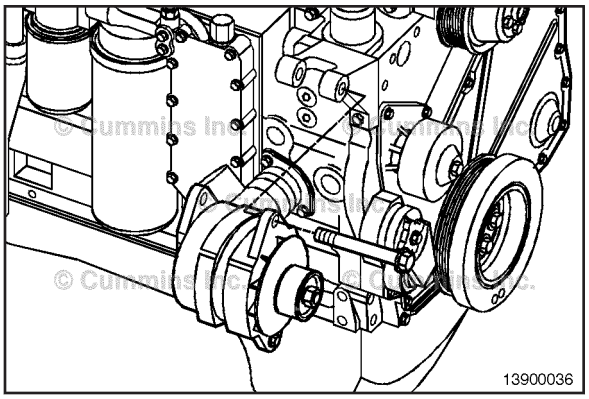

Remove the alternator mounting capscrew.

Remove the alternator.

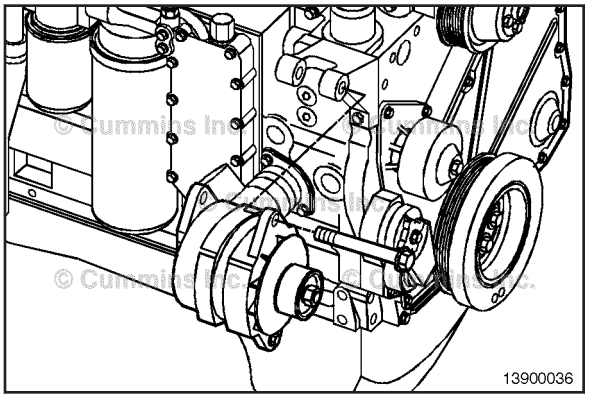

Install

Install the alternator upper mounting bracket capscrew. Do **not** tighten at this time.

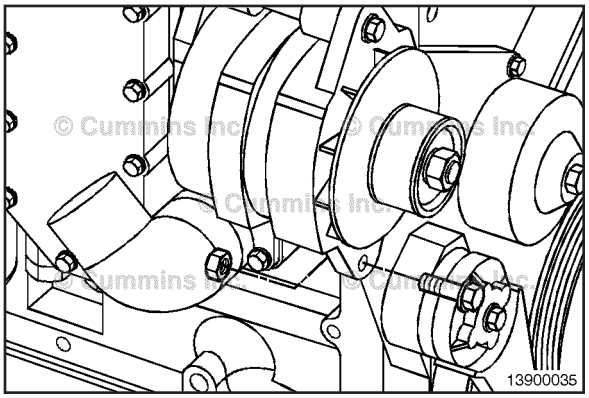

Install the alternator link capscrew at the alternator.

Tighten the upper mounting bracket capscrew.

Torque Value:
Upper Mounting Capscrew

Step 1	77 N•m	[57 ft-lb]

Tighten the lower mounting link at the alternator and engine mounting location.

Torque Value:
Alternator Link at Alternator

Step 1	44 N•m	[32 ft-lb]

Torque Value:
Alternator Link at Engine Mounting Location

Step 1	24 N•m	[18 ft-lb]

To buy Cummins Parts and Service Manuals, Training Guides, or Tools go to our website at https://store.cummins.com

Finishing Steps

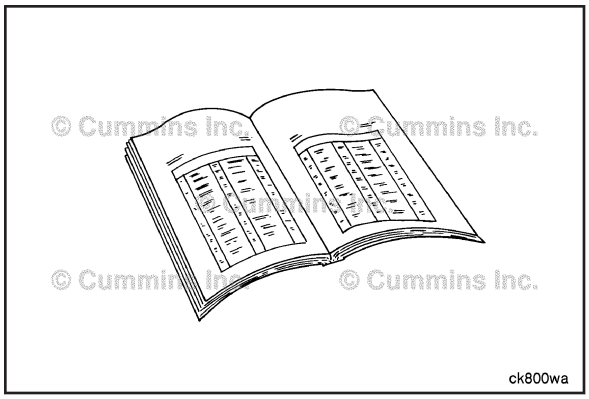

⚠ WARNING ⚠

Batteries can emit explosive gases. To reduce the possibility of personal injury, always ventilate the compartment before servicing the batteries. To reduce the possibility of arcing, remove the negative (-) battery cable first and attach the negative (-) battery cable last.

- Install the alternator drive belt. Refer to Procedure 013-005 in Section 6.
- Install the belt guard. Refer to Procedure 008-001 in Section A.
- Install the belt guard, if equipped. Refer to Procedure 008-001 in Section 8.
- Connect the battery ground cable.
- Connect the battery. Refer to Procedure 013-009 in Section 6.
- Operate the engine and verify proper alternator operation.

Starting Motor

Initial Check

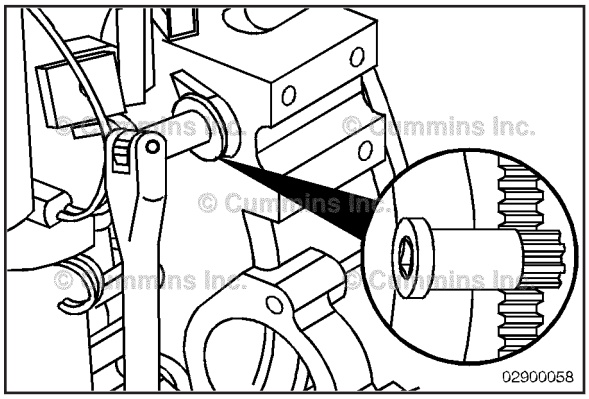

If the starting motor solenoid is making a sound, but the engine is not rotating, remove the starting motor and check for broken ring gear teeth or a broken starting motor spring.

To buy Cummins Parts and Service Manuals, Training Guides, or Tools go to our website at https://store.cummins.com

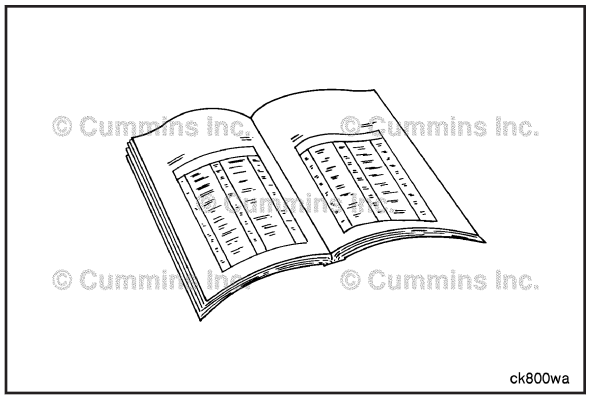

Preparatory Steps

⚠WARNING⚠
Batteries can emit explosive gases. To reduce the possibility of personal injury, always ventilate the compartment before servicing the batteries. To reduce the possibility of arcing, remove the negative (-) battery cable first and attach the negative (-) battery cable last.

- Disconnect the battery cables from the battery terminals. Refer to Procedure 013-009 in Section 4.
- If equipped with a jump start protection cover, remove the jump start protection cover nut (M5) and jump start protection cover to gain access to the electrical connections.
- Identify each wire with a tag indicating its location on the starting motor.
- Remove the electrical connections from the starting motor.
- Prior to removing the starter, use steam to clean the area around the starting motor, to prevent debris from entering the flywheel housing.
- Dry with compressed air.

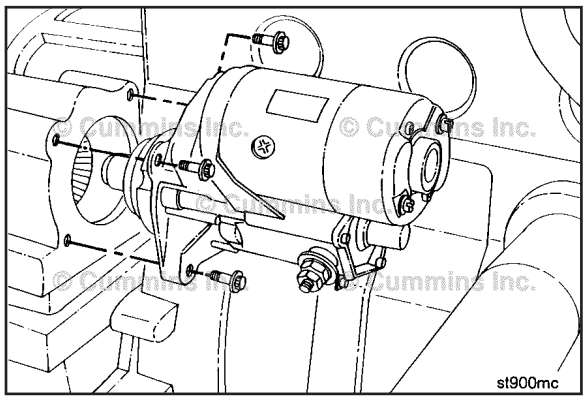

Remove

Remove the three capscrews and the starting motor.

If equipped with a system integration module relay, remove the relay support bracket from the starting motor mounting capscrew.

If equipped with a starting motor spacer, remove the spacer and clean all surfaces between the starting motor, starting motor spacer, and flywheel housing with a wire brush.

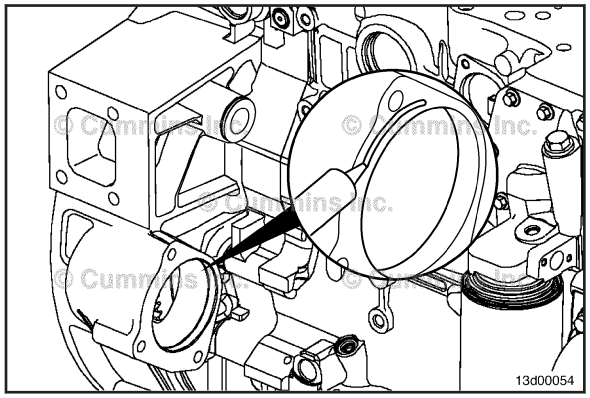

NOTE: If a starting motor spacer is required, make sure to apply sealant to the side of the spacer that contacts the starting motor.

To buy Cummins Parts and Service Manuals, Training Guides, or Tools go to our website at https://store.cummins.com

Install the three capscrews, starting motor, and starting motor spacer (if required).

Torque Value: 43 N•m [32 ft-lb]

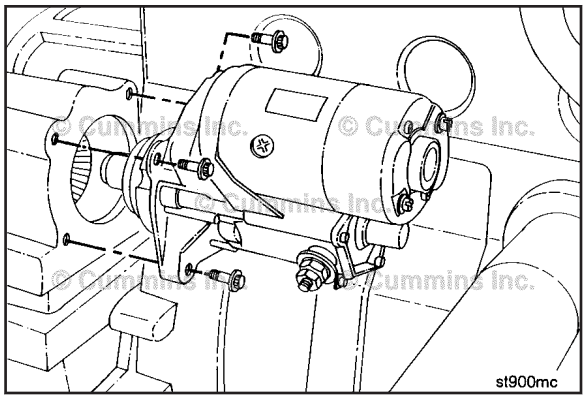

Finishing Steps

Cummins® Branded Starters

⚠CAUTION⚠
Do not overtighten the electrical connections. Starting motor damage can result.

NOTE: Use the location tags to help identify where each wire connection goes.

- Connect the electrical connections to the starting motor.

Torque Value:
M5
Step 1 4 N•m [35 in-lb]

Torque Value:
M10
Step 1 21 N•m [186 in-lb]

- Connect the battery cables to the battery terminals. Refer to Procedure 013-009 in Section 4.

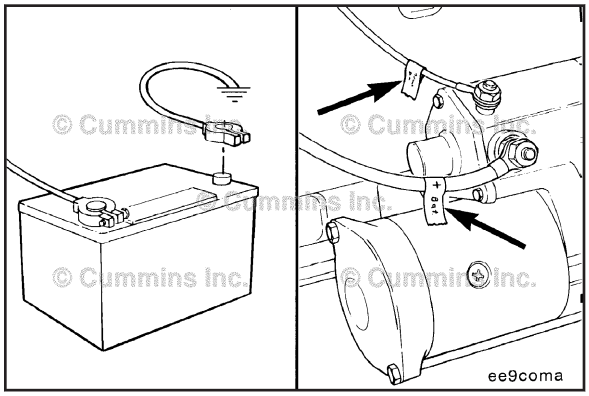

Non-Cummins® Branded Starters

⚠WARNING⚠
Batteries can emit explosive gases. To reduce the possibility of personal injury, always ventilate the compartment before servicing the batteries. To reduce the possibility of arcing, remove the negative (-) battery cable first and attach the negative (-) battery cable last.

⚠CAUTION⚠
Do not overtighten the electrical connections. Starting motor damage can result.

NOTE: Use the location tags to help identify where each wire connection goes.

- Connect the electrical connections to the starting motor.
- For Non-Cummins branded starters, refer to the OEM service manual for torque specifications.
- Connect the battery cables to the battery terminals. Refer to Procedure 013-009 in Section 4.

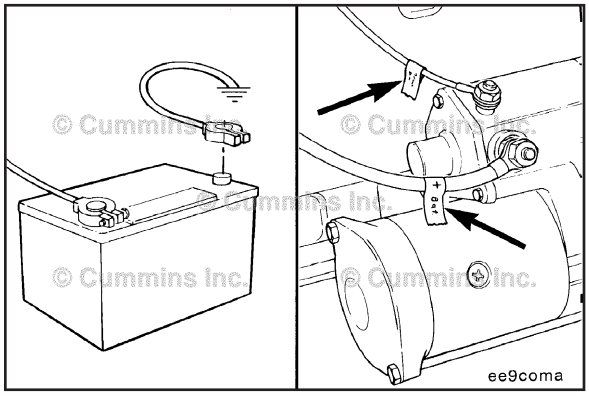

To buy Cummins Parts and Service Manuals, Training Guides, or Tools go to our website at https://store.cummins.com

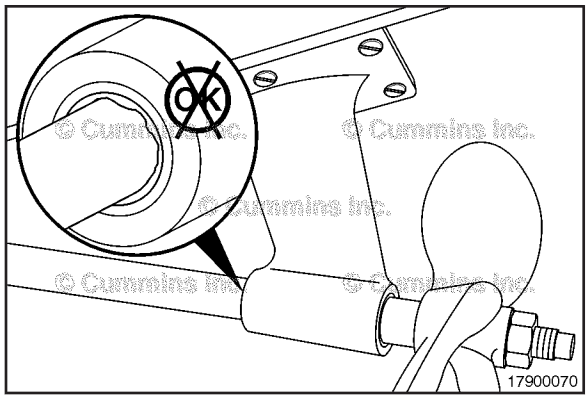

Propeller Shaft

General Information

Improper alignment of the propeller shaft can result in many problems. Vibration is usually the first indicator. Failure of the shaft seal or stuffing box can also occur. If damaged shaft seals, stuffing box, strut, cutlass bearing, or propeller are found, refer to an authorized original equipment manufacturer (OEM) repair location.

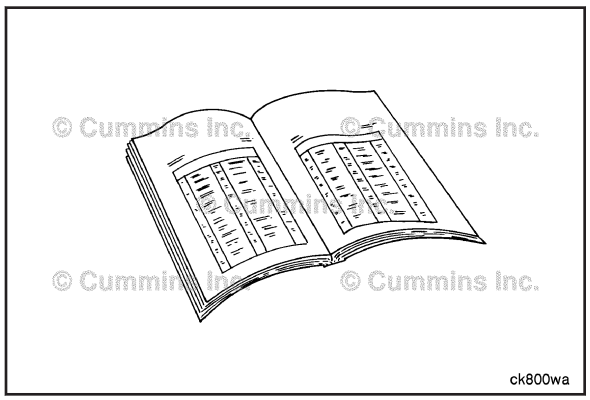

Preparatory Steps

Shaft alignment is checked when isolators are replaced, adjusted, or any time excessive vibration has been noticed. Also, any time the vessel has been taken out of the water and stored or blocked minor changes can take place in the shape of the hull. The shaft is checked and realigned as necessary after the vessel has been placed back in the water.

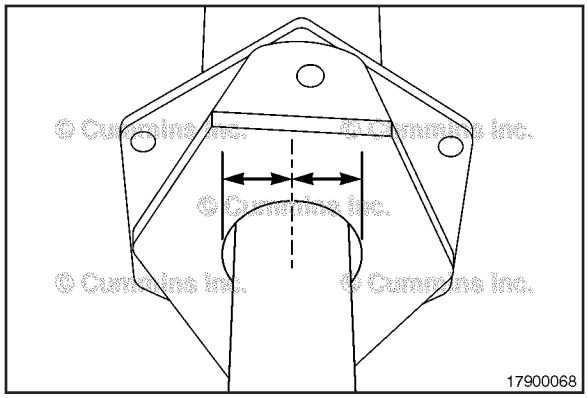

Cleaning Machine Operation

Inspect the propeller shaft for debris and burrs. Clean the propeller shaft.

Check that the shaft is centered in the opening of the stuffing box flange. The specifications will vary by manufacturer. If any problems are noted, refer to an authorized OEM service location.

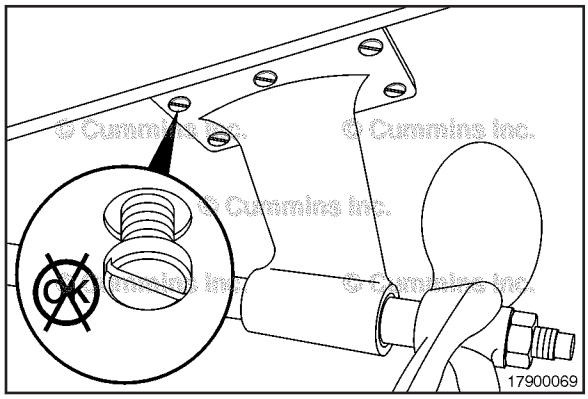

Inspect the strut. Make sure the strut is mounted solidly to the hull.

Check that the shaft is aligned with the cutlass bearing, and that the bearing is **not** worn.

If any problems are noted, refer to an authorized OEM service location.

To buy Cummins Parts and Service Manuals, Training Guides, or Tools go to our website at https://store.cummins.com

A misaligned shaft will cause uneven wear of the cutlass bearing.

If the strut or cutlass bearing needs to be repaired or replaced, refer to an authorized OEM service location.

NOTE: Initially align the shaft out of the water using the following instructions, then perform a final alignment after the vessel is in the water.

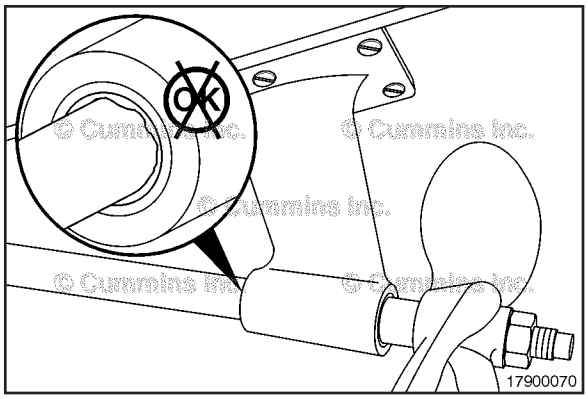

Alignment:

Check that the shaft is centered in the opening of the stuffing box flange.

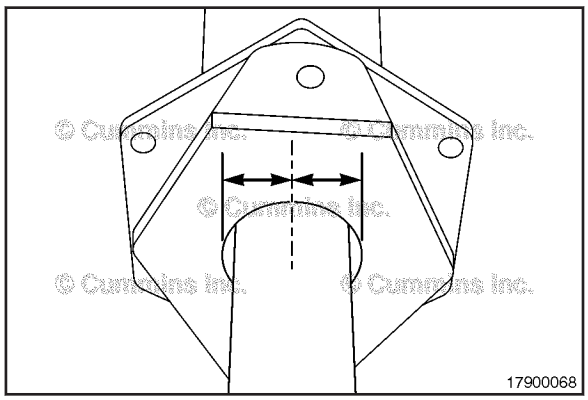

Unbolt the propeller shaft coupling from the marine gear coupling.

The faces of the marine gear (1) couplings and propeller (2) **must** be parallel.

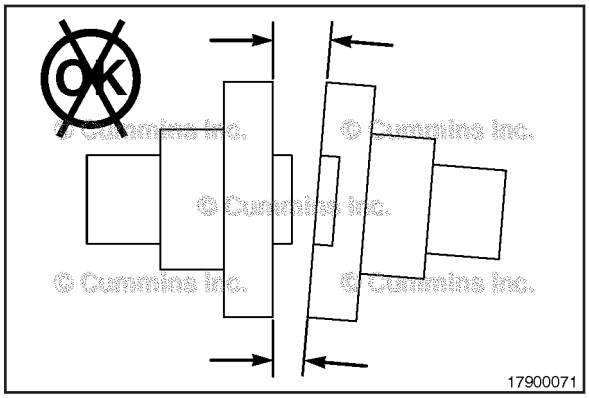

The couplings **must** be aligned.

A straight edge can be used to help align the couplings.

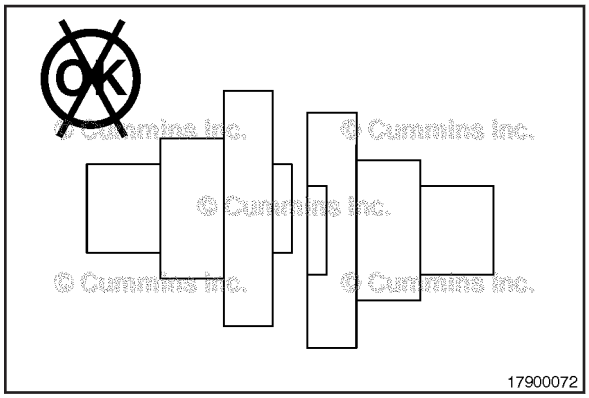

To buy Cummins Parts and Service Manuals, Training Guides, or Tools go to our website at https://store.cummins.com

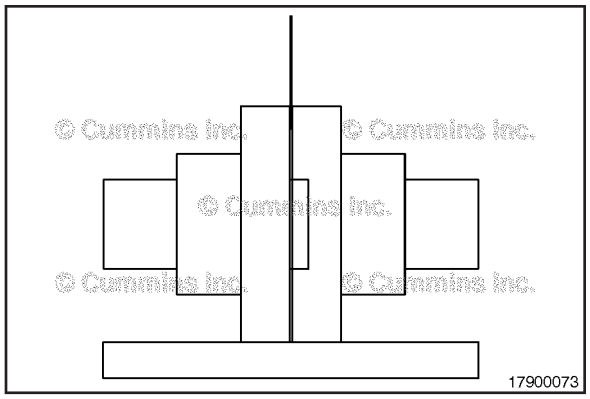

Use a feeler gauge (3) to check the alignment of the coupling in four different places, 90 degrees apart. The variation is to be within 0.051 to 0.102 mm [0.002 to 0.004 in].

If the flange is out of alignment the engine mounting will need to be adjusted until the alignment is correct. Refer to Engine Mounting/Drive Systems section in the Marine Recreational Installation Directions, Bulletin 3884649.

Make sure all mounting bolts and nuts are torqued to the proper specifications. See the manufacturer service information.

Bolt the coupling in place and torque to the specifications for the capscrew and bolt size.

Specifications

Capscrews, Bolts and Nuts Torque for Fine and Coarse Threads				
	SAE Grade 5		SAE Grade 8	
	(1) As Received	(2) Lubricated	(1) As Received	(2) Lubricated
	N•m [ft-lb]	N•m [ft-lb]	N•m [ft-lb]	N•m [ft-lb]
1/4	12 ± 1 [9 ± 1]	9 ± 1 [7 ± 1]	19 ± 1 [14 ± 1]	15 ± 1 [11 ± 1]
5/16	26 ± 3 [19 ± 2]	20 ± 3 [15 ± 2]	37 ± 3 [27 ± 2]	30 ± 3 [22 ± 2]
3/8	45 ± 4 [33 ± 3]	37 ± 3 [27 ± 2]	62 ± 5 [46 ± 4]	52 ± 4 [38 ± 3]
7/16	71 ± 5 [52 ± 4]	54 ± 4 [40 ± 3]	99 ± 8 [73 ± 6]	81 ± 7 [60 ± 5]
1/2	108 ± 8 [80 ± 6]	88 ± 7 [65 ± 5]	152 ± 11 [112 ± 8]	122 ± 9 [90 ± 7]
9/16	152 ± 11 [112 ± 8]	112 ± 11 [90 ± 8]	214 ± 16 [158 ± 12]	176 ± 14 [130 ± 10]
5/8	214 ± 16 [158 ± 12]	176 ± 14 [130 ± 10]	304 ± 22 [224 ± 16]	244 ± 20 [180 ± 15]
3/4	380 ± 27 [280 ± 20]	305 ± 27 [225 ± 20]	529 ± 41 [390 ± 30]	434 ± 34 [320 ± 25]
7/8	607 ± 43 [448 ± 32]	488 ± 41 [360 ± 30]	854 ± 68 [630 ± 50]	691 ± 54 [510 ± 40]
1	922 ± 68 [680 ± 50]	732 ± 61 [540 ± 45]	1302 ± 95 [960 ± 70]	1051 ± 81 [775 ± 60]
1 1/8	1152 ± 81 [850 ± 60]	915 ± 81 [675 ± 60]	1844 ± 136 [1360 ± 100]	1491 ± 115 [1100 ± 85]
1 1/4	1593 ± 115 [1175 ± 85]	1254 ± 102 [925 ± 75]	2508 ± 203 [1850 ± 150]	2034 ± 169 [1500 ± 125]

1 Use for all capscrews, bolts, and nuts coated only with the fastener manufacturer's rust preventive oil and use for parts wiped or washed nearly free of oil. Do **not** use for plated parts.

2 Use for all capscrews and nuts whose threads and washer faces are lubricated.

To buy Cummins Parts and Service Manuals, Training Guides, or Tools go to our website at https://store.cummins.com

Marine Vibration Isolator

General Information

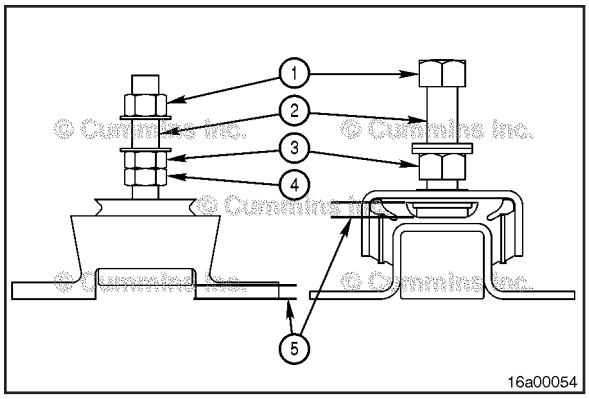

This illustration shows the different types of marine isolators, and the location of the snubber and corresponding gap used to determine loading of the isolator.

1 Top nut
2 Leveling stud
3 Adjusting nut
4 Jam nut
5 Snubber gap.

Generally, it is recommended to replace isolators as a set, but the age of the isolators and the conditions that caused the damage need to be reviewed.

Isolators of different designs should **not** be mixed in the same installation.

Initial Check

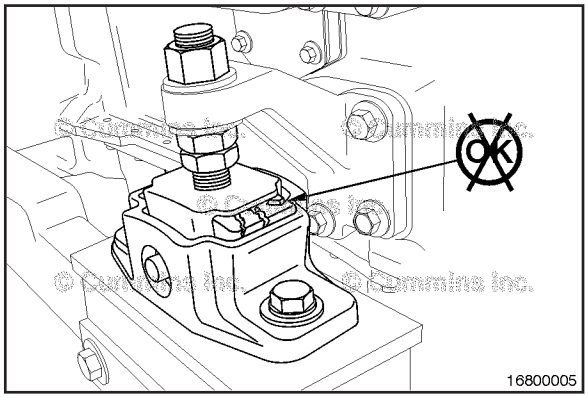

NOTE: This Initial Check is scheduled to be performed at the Maintenance Procedures at 500 Hours or 1 Year interval.

Check that the rubber portion of the isolator is **not** cracked, damaged, or pushed out from the isolator housing.

If the rubber is damaged, the isolator will need to be replaced.

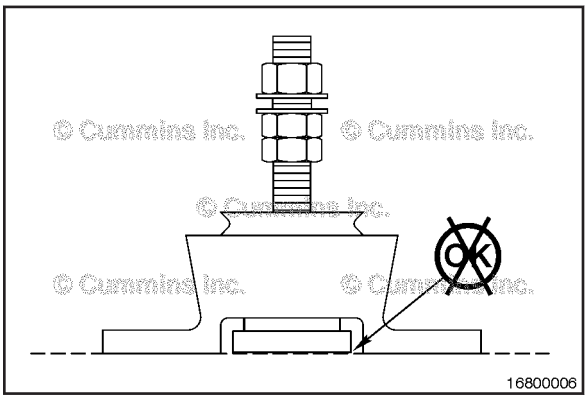

Check that the isolator is **not** fully compressed. If an isolator is in the fully compressed condition, there will be no clearance in the snubber gap.

If **only** one isolator is compressed, the loading of the isolators may be unbalanced. Refer to Procedure 016-026 in Section A for steps to balance the load. If the isolator is still compressed after adjusting the load, the isolator will need to be replaced.

If two isolators that are diagonally across from each other are significantly more compressed or fully compressed, then the loading on the isolators is unbalanced. Refer to Procedure 016-026 in Section A for steps to balance the load.

If two isolators that are both on one side of the engine or both at the front or rear of the engine are fully compressed, the isolators will need to be replaced.

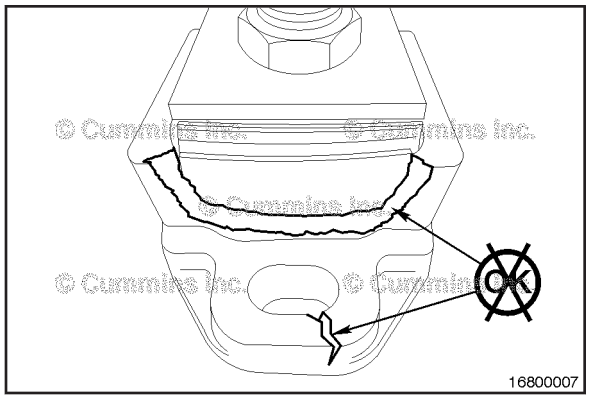

Check that the metal parts of the isolator are **not** damaged, cracked, bent, or warped. If they are, the isolator will need to be replaced.

Check for excessive corrosion. If corrosion is enough to weaken the structure or impede the function of the isolator, it will need to be replaced.

If an isolator is damaged or worn and less than one year old, check that the isolator part number is correct for the engine.

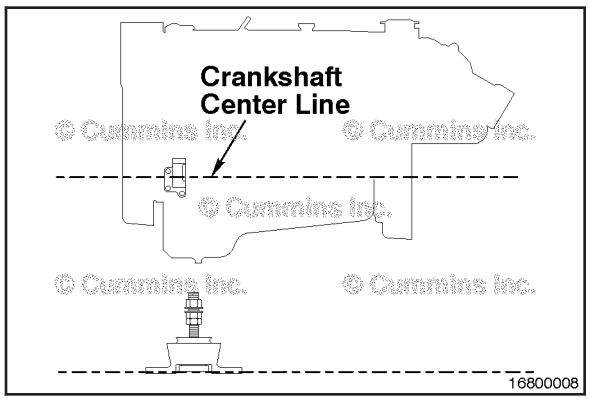

Check that the isolator mounting base is parallel with the engine crankshaft centerline and that the stud is perpendicular to the base, when looking from the side of the engine. The oil pan flange can be used as a visual reference. The engine support brackets **must** also be parallel.

The alignment of the isolator base to the crank centerline should be within four degrees of parallel.

The alignment of the isolator stud to the base should be within four degrees of perpendicular.

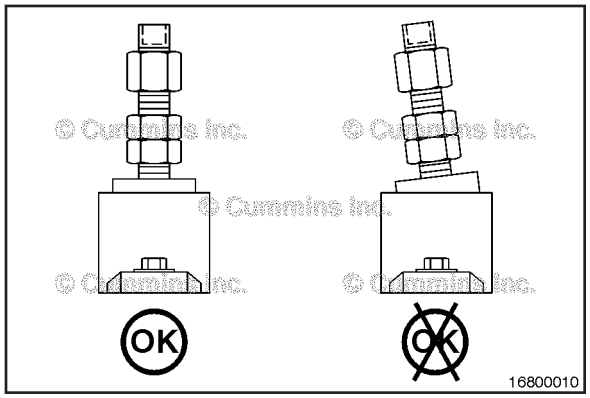

Check that the isolator mounting base is parallel to the transverse crankshaft centerline and that the stud is perpendicular to the base when looking from the front or back of the engine. The engine support brackets **must** also be parallel.

The alignment of the isolator base to the transverse crankshaft centerline should be within two degrees of parallel.

The alignment of the isolator stud to the base should be within two degrees of perpendicular.

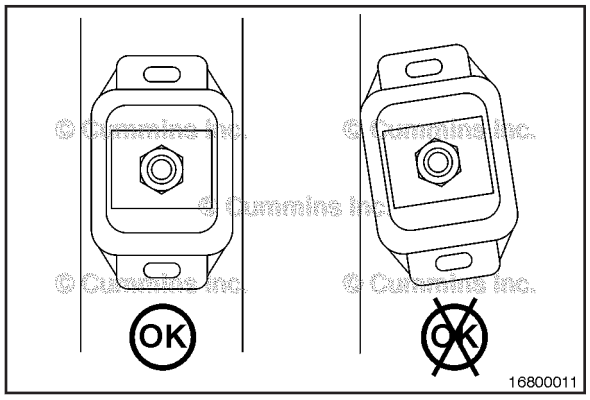

Check that the isolator mounting base is parallel to the crankshaft centerline when looking from the top of the engine.

The alignment of the isolator base to the crankshaft centerline should be within two degrees of parallel.

To buy Cummins Parts and Service Manuals, Training Guides, or Tools go to our website at https://store.cummins.com

If the isolator is out of alignment, the mounting will need to be adjusted. Wedges can be used to shim the base to achieve proper alignment. Shims **must** be made of a solid material that will **not** compress under the weight of the engine.

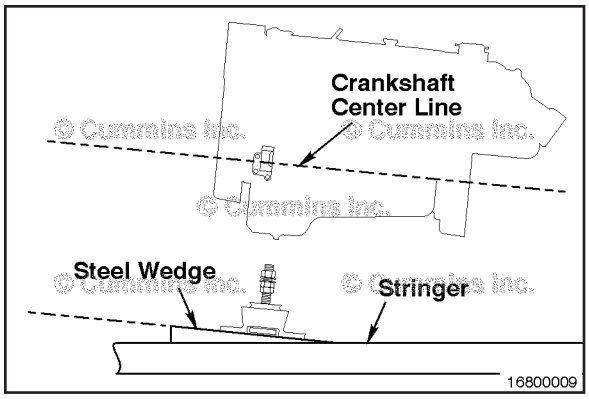

Preparatory Steps

⚠WARNING⚠

Batteries can emit explosive gases. To reduce the possibility of personal injury, always ventilate the compartment before servicing the batteries. To reduce the possibility of arcing, remove the negative (-) battery cable first and attach the negative (-) battery cable last.

- Disconnect the battery. Refer to the original equipment manufacturer (OEM) service manual.
- Disconnect the propeller shaft. Disengage the flange. Refer to Procedure 016-025 in Section A.

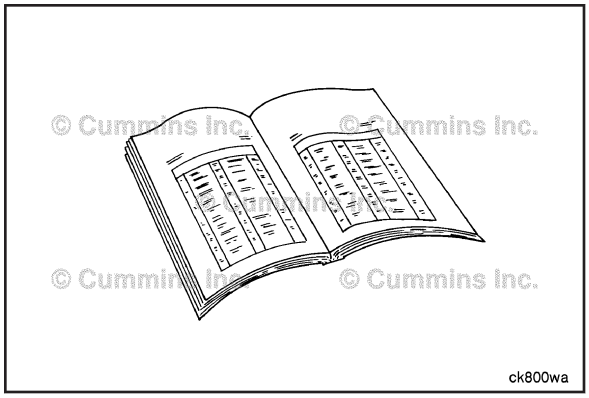

To buy Cummins Parts and Service Manuals, Training Guides, or Tools go to our website at https://store.cummins.com

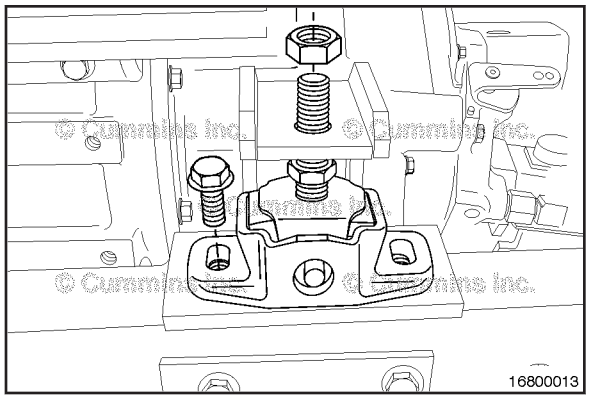

Remove

WARNING

This component or assembly weighs greater than 23 kg [50 lb]. To prevent serious personal injury, be sure to have assistance or use appropriate lifting equipment to lift this component or assembly.

The engine needs to be supported before removing the isolators. The amount of space available will determine the best method for this support.

Remove the top nut from the isolator's adjusting stud. Remove the bolts or capscrews retaining the isolator base.

Raise the engine if necessary to facilitate the removal of the isolator.

Make sure that any equipment used for hoisting of jacking the engine is capable of handling the weight of the engine and marine gear. Any engine component used for attaching or support such as the lifting brackets or engine supports **must** be correct for the engine. Reference the appropriate manual for General Engine information in Section V for the engine weight.

Remove the isolator.

If reusing the isolator, mark the position of the isolator relative to the engine to make sure of installation in the same location.

If replacing the worn or damaged isolator with a new isolator, measure the height of the adjusting nut on the stud to assist in setting the new isolator adjusting nut height.

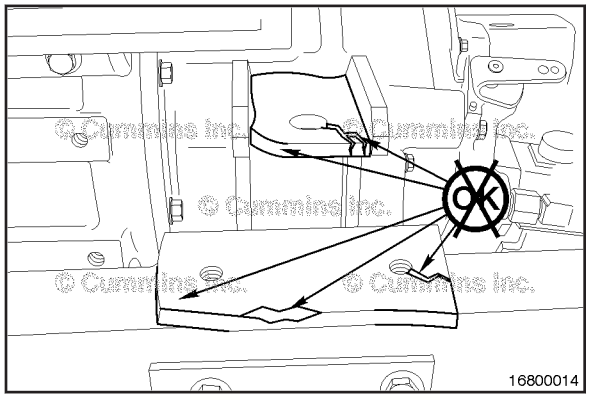

Inspect for Reuse

Inspect the vessel stringers or engine bed to make sure they have **not** been damaged and that they can continue to support the weight of the engine. This is especially true of stringers constructed of wood, wood core, or hollow fiberglass.

Inspect the mounting holes in the stringers or the engine bed for damage. If the stringers, engine bed, or mounting holes need to be repaired, contact an OEM qualified repair location.

To buy Cummins Parts and Service Manuals, Training Guides, or Tools go to our website at https://store.cummins.com

Install

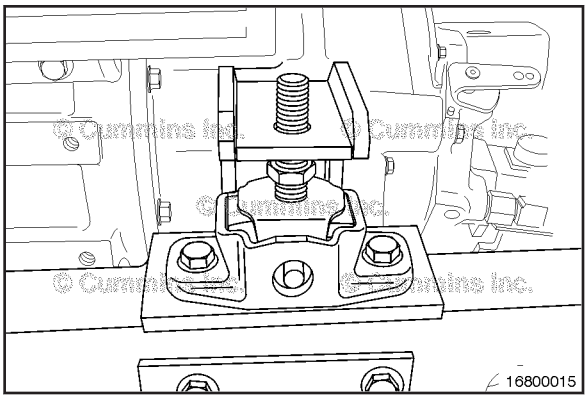

Set the new isolator in place. Check that the isolator is properly aligned. Reference the Initial Check section in this procedure for alignment information.

Set the adjusting nut at the approximate height of the isolator removed.

Replace other isolators that need to be changed using the same technique.

Install the washer and top nut.

Lower the engine so that its weight is fully supported by the isolators.

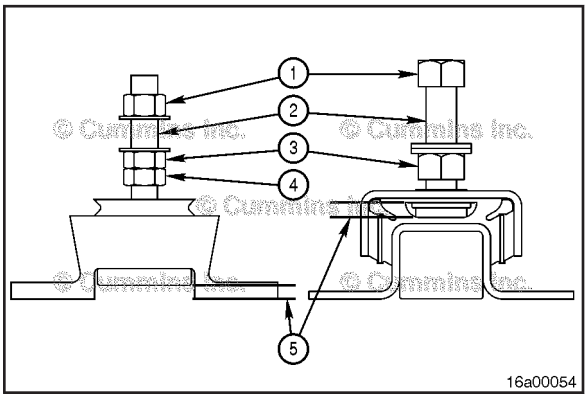

Verify that the isolators are loaded evenly. Depending on the configuration of the engine, the weight may **not** be evenly distributed on all four corners.

The engine will be heavier at either the front or back, depending the on configuration. Therefore, the isolators on the heavier end will be compressed more.

Check the snubber gap on all isolators.

If **only** one isolator or two isolators that are diagonally across from each other are significantly more compressed, the loading on the isolators is unbalanced.

Adjust the loading on the isolators by raising or lowering the adjusting nut on the stud. Raising the adjusting nut will increase the load. Lowering the adjusting nut will decrease the load.

The engine should be lifted and the load removed from the isolator before moving the adjusting nut, to prevent damage to the threads.

Finishing Steps

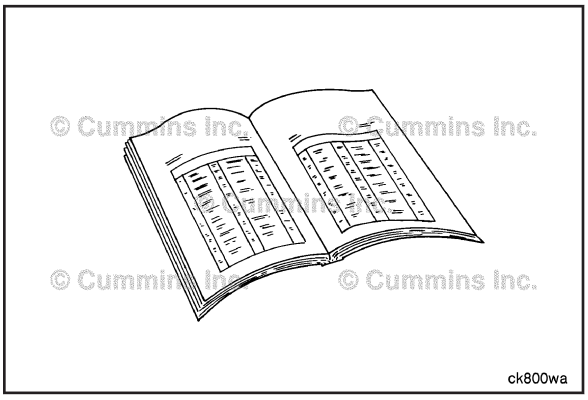

⚠WARNING⚠
Batteries can emit explosive gases. To reduce the possibility of personal injury, always ventilate the compartment before servicing the batteries. To reduce the possibility of arcing, remove the negative (-) battery cable first and attach the negative (-) battery cable last.

- Align the propeller shaft. Refer to Procedure 016-025 in Section A.
- Connect the battery cables. Refer to the OEM service manual.
- Start the engine and check for proper operation.

Notes

Section D - System Diagrams

Section Contents

Page
Flow Diagram, Air Intake System D-16
General Information..... D-16
Flow Diagram, Cooling System D-10
General Information..... D-10
Flow Diagram, Exhaust System D-17
General Information..... D-17
Flow Diagram, Fuel System D-2
General Information..... D-2
Flow Diagram, Lubricating Oil System D-5
General Information..... D-5
System Diagrams - Overview D-1
General Information..... D-1

To buy Cummins Parts and Service Manuals, Training Guides, or Tools go to our website at https://store.cummins.com

This Page Left Intentionally Blank

System Diagrams - Overview

General Information

The following drawings show the flow through the engine systems. Although parts can change between different applications and installations, the flow remains the same. The systems shown are:

- Fuel System
- Lubricating Oil System
- Coolant System
- Intake Air System
- Exhaust System
- Compressed Air System.

Knowledge of the engine systems can help you in troubleshooting, service, and general maintenance of your engine.

To buy Cummins Parts and Service Manuals, Training Guides, or Tools go to our website at https://store.cummins.com

Flow Diagram, Fuel System

General Information

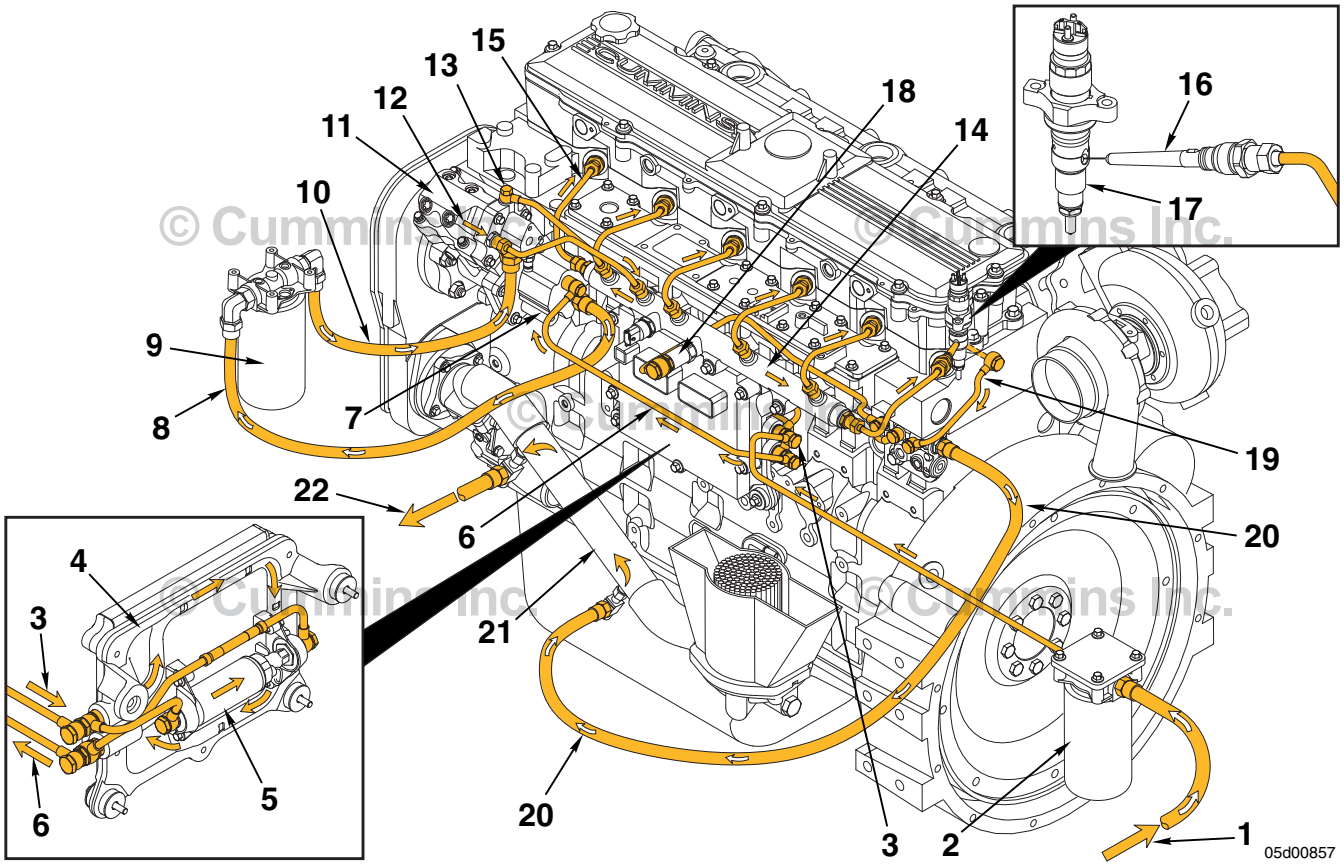

QSL9 Marine Applications, Cummins® Common Rail Fuel System

1 Fuel from supply tank
2 Fuel filter and water separator
3 Fuel supply to ECM mounted fuel lift pump
4 ECM cooling plate
5 ECM mounted fuel lift pump
6 Fuel outlet from ECM mounted fuel lift pump
7 Fuel gear pump
8 Fuel from gear pump to fuel filter
9 Pressure side fuel filter
10 Fuel inlet to fuel pump actuator
11 High-pressure fuel pump
12 Fuel outlet from high-pressure pump
13 High-pressure pump drain flow connection
14 Fuel rail
15 High-pressure injector supply lines
16 High-pressure fuel connector
17 Fuel injector
18 Fuel pressure relief valve
19 Fuel injector drain flow line
20 Fuel return to fuel cooler on sea water cooled engines **only**; fuel return to tank on keel cooled engines
21 Fuel cooler (sea water cooled engines **only**)
22 Fuel return to fuel tank (sea water cooled engines **only**).

To buy Cummins Parts and Service Manuals, Training Guides, or Tools go to our website at https://store.cummins.com

Flow Diagram, Fuel System

General Information

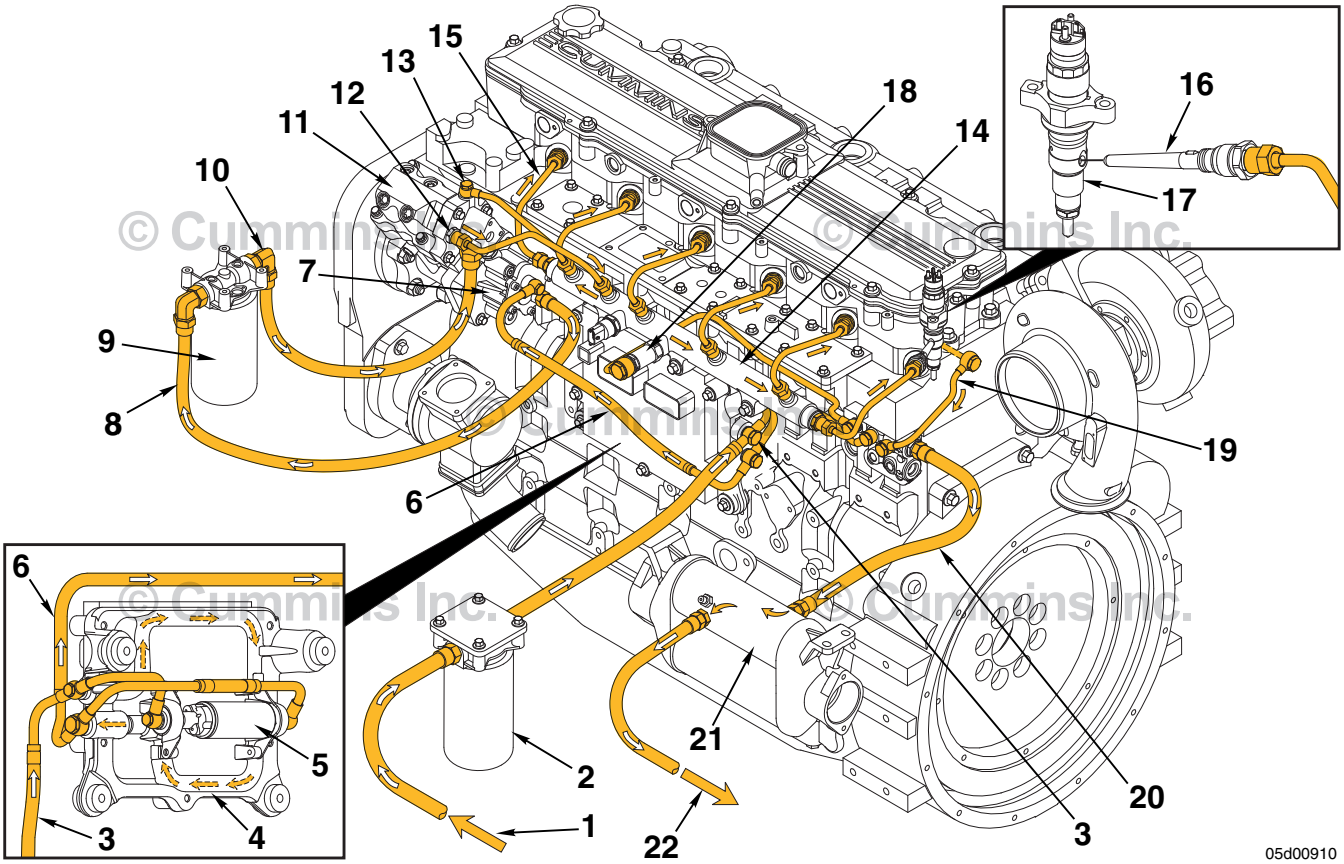

QSC8.3 Marine Applications (Sea Water Cooled), Cummins® Common Rail Fuel System With ECM Fuel Cooling

1 Fuel from supply tank
2 Fuel filter and water separator
3 Fuel supply to ECM mounted fuel lift pump
4 ECM cooling plate
5 ECM mounted fuel lift pump
6 Fuel outlet from ECM mounted fuel lift pump
7 Fuel gear pump
8 Fuel from gear pump to fuel filter
9 Pressure side fuel filter
10 Fuel inlet to fuel pump actuator
11 High-pressure fuel pump
12 Fuel outlet from high-pressure pump
13 High-pressure pump drain flow connection
14 Fuel rail
15 High-pressure injector supply lines
16 High-pressure fuel connector
17 Fuel injector
18 Fuel pressure relief valve
19 Fuel injector drain flow line
20 Fuel return to fuel cooler
21 Fuel cooler
22 Fuel return to fuel tank.

To buy Cummins Parts and Service Manuals, Training Guides, or Tools go to our website at https://store.cummins.com

Flow Diagram, Fuel System

General Information

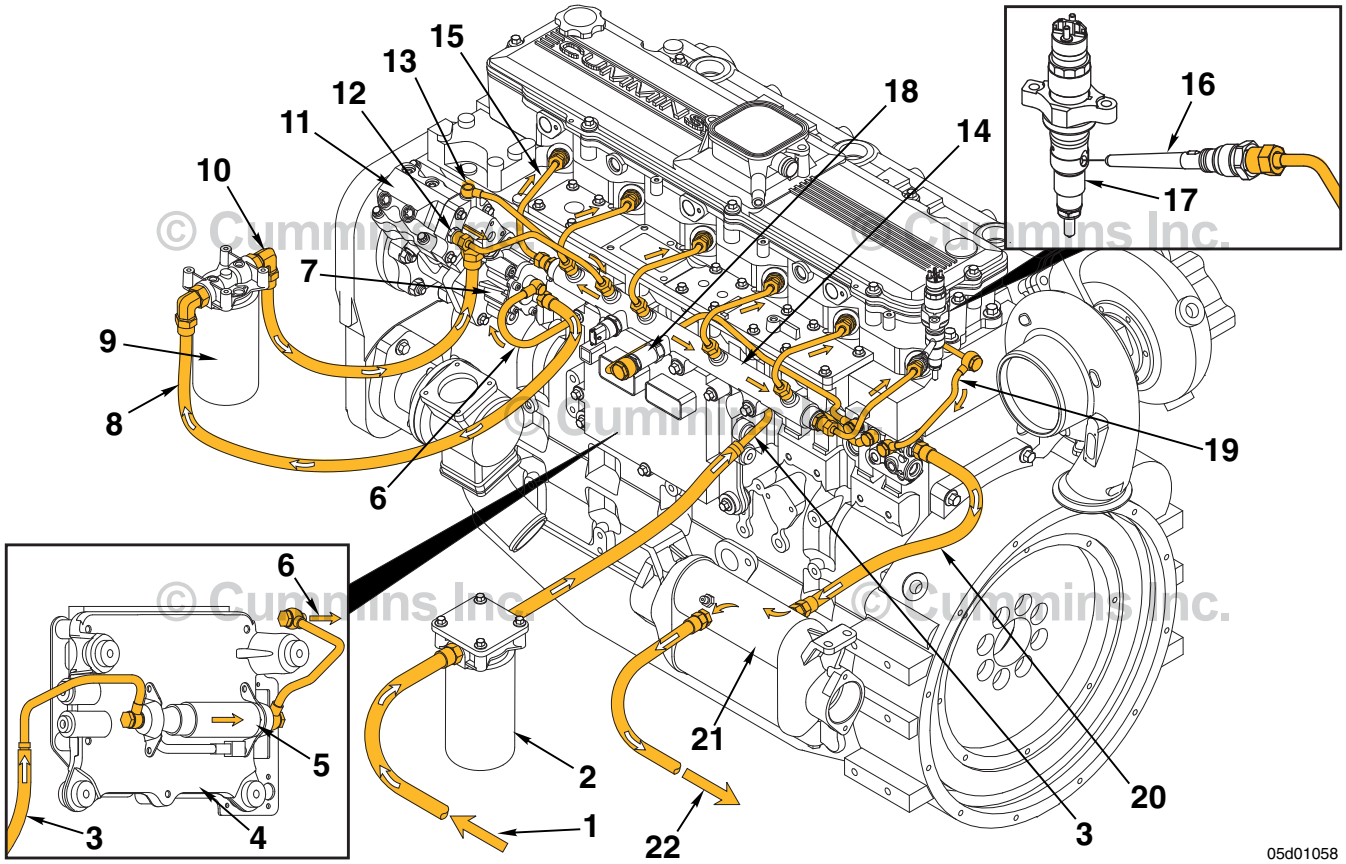

QSC8.3 Marine Applications (Sea Water Cooled), Cummins® Common Rail Fuel System Without ECM Fuel Cooling

1 Fuel from supply tank
2 Fuel filter and water separator
3 Fuel supply to ECM mounted fuel lift pump
4 ECM plate
5 ECM mounted fuel lift pump
6 Fuel outlet from ECM mounted fuel lift pump
7 Fuel gear pump
8 Fuel from gear pump to fuel filter
9 Pressure side fuel filter
10 Fuel inlet to fuel pump actuator
11 High-pressure fuel pump
12 Fuel outlet from high-pressure pump
13 High-pressure pump drain flow connection
14 Fuel rail
15 High-pressure injector supply lines
16 High-pressure fuel connector
17 Fuel injector
18 Fuel pressure relief valve
19 Fuel injector drain flow line
20 Fuel return to fuel cooler
21 Fuel cooler
22 Fuel return to fuel tank.

To buy Cummins Parts and Service Manuals, Training Guides, or Tools go to our website at https://store.cummins.com

Flow Diagram, Lubricating Oil System

General Information

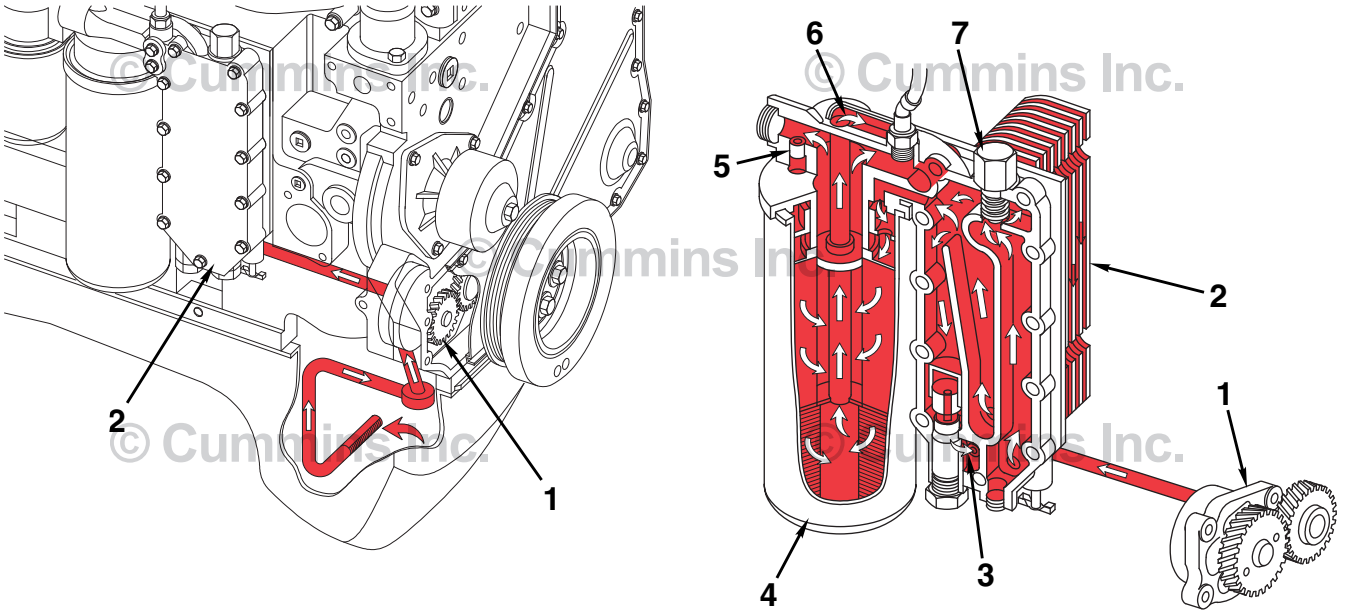

07d00183

Lubricating Oil Cooler Flow

1 Gerotor lubricating oil pump
2 Lubricating oil cooler
3 Bypass oil to lubricating oil pan
4 Full flow lubricating oil filter
5 Filter bypass valve
6 From lubricating oil filter to main oil rifle
7 Oil thermostat

To buy Cummins Parts and Service Manuals, Training Guides, or Tools go to our website at https://store.cummins.com

Flow Diagram, Lubricating Oil System

General Information

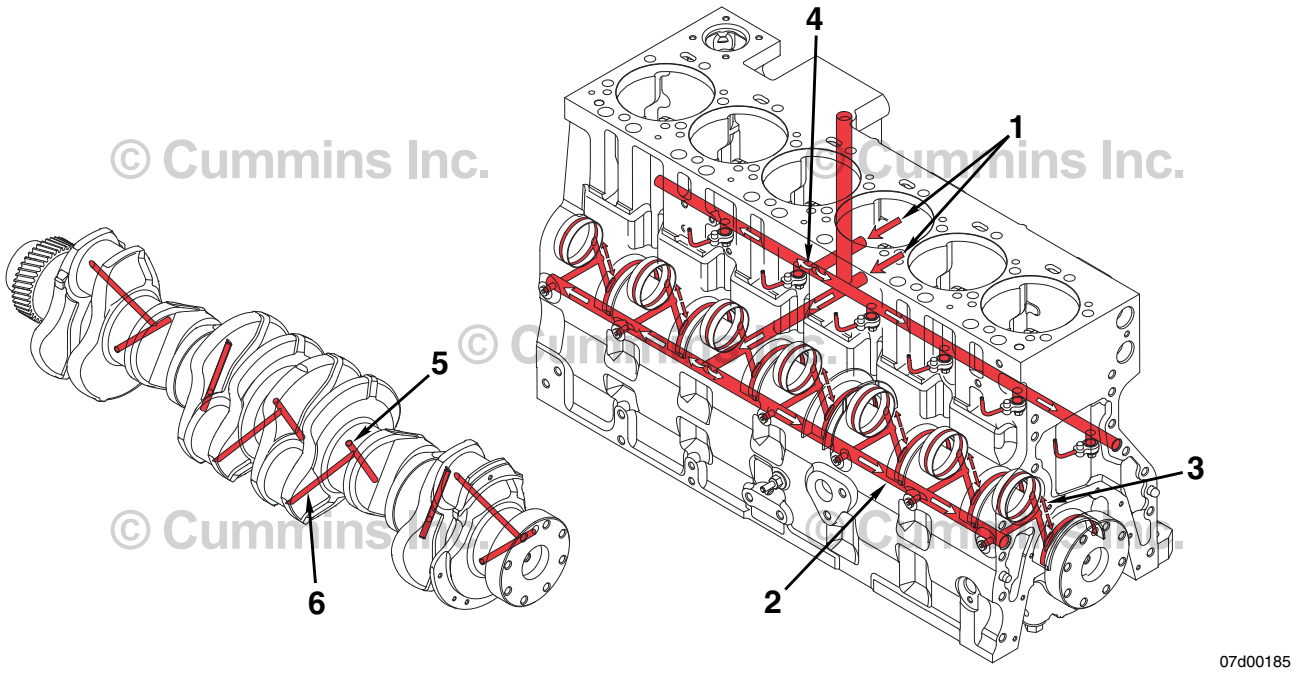

© Cummins Inc.

Lubrication for Power Components

1 From lubricating oil filter
2 Main lubricating oil rifle
3 To camshaft
4 To piston cooling nozzle
5 From main lubricating oil rifle
6 To connecting rod bearing.

To buy Cummins Parts and Service Manuals, Training Guides, or Tools go to our website at https://store.cummins.com

Flow Diagram, Lubricating Oil System

General Information

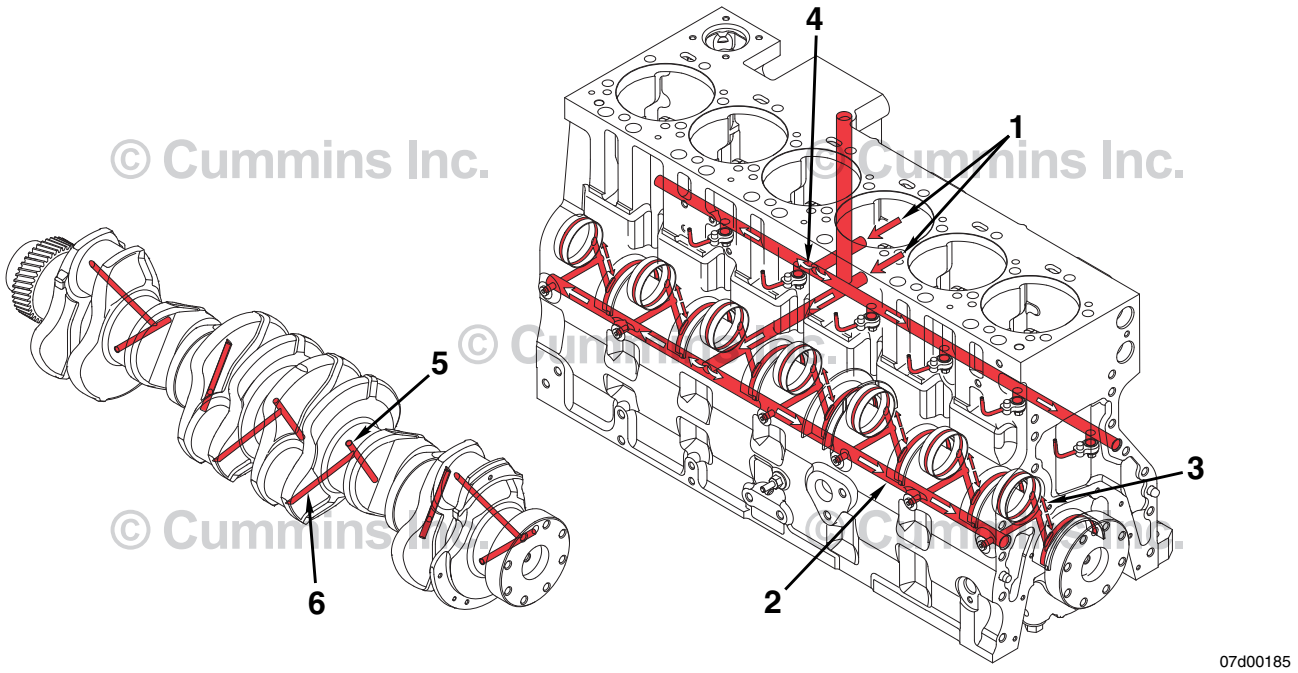

© Cummins Inc.

Lubrication for Power Components (All ISL engines and ISC engines with CM850 Electronic Control Module)

1 From lubricating oil filter
2 Main lubricating oil rifle
3 To camshaft
4 To piston cooling nozzle
5 From main lubricating oil rifle
6 To connecting rod bearing.

To buy Cummins Parts and Service Manuals, Training Guides, or Tools go to our website at https://store.cummins.com

Flow Diagram, Lubricating Oil System

General Information

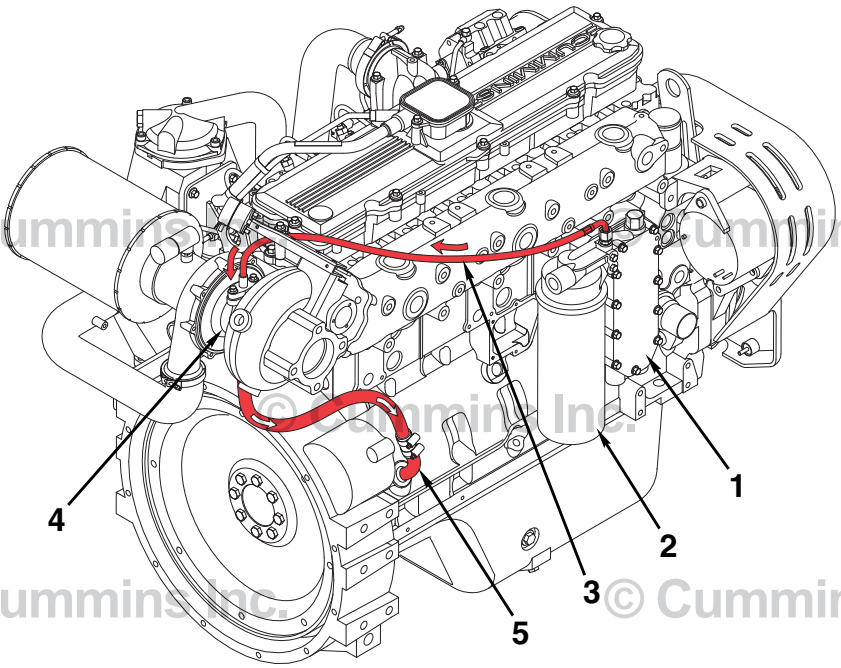

© Cummins Inc.

07d00189

Lubrication for Turbocharger (Marine Applications)

1 Lubricating oil cooler
2 Lubricating oil filter
3 Turbocharger lubricating oil supply
4 Turbocharger
5 Turbocharger lubricating oil drain.

To buy Cummins Parts and Service Manuals, Training Guides, or Tools go to our website at https://store.cummins.com

Flow Diagram, Lubricating Oil System

General Information

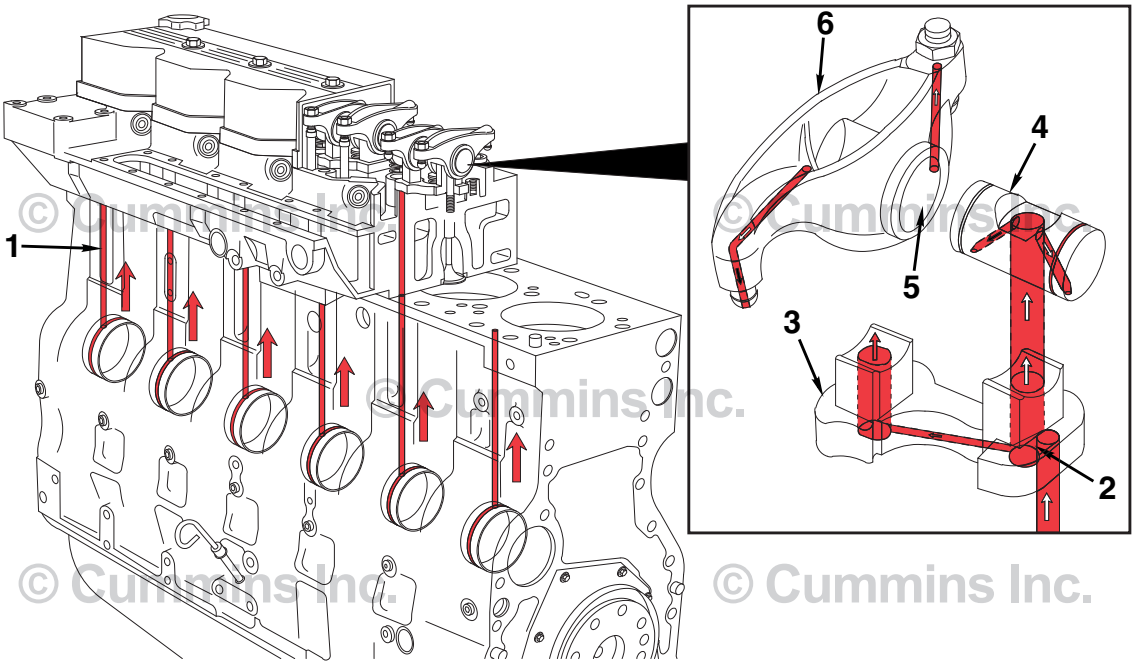

Lubrication for the Overhead

1 From cam bushings
2 Transfer slot
3 Rocker lever support
4 Rocker lever shaft
5 Rocker lever bore
6 Rocker lever.

To buy Cummins Parts and Service Manuals, Training Guides, or Tools go to our website at https://store.cummins.com

Flow Diagram, Cooling System

General Information

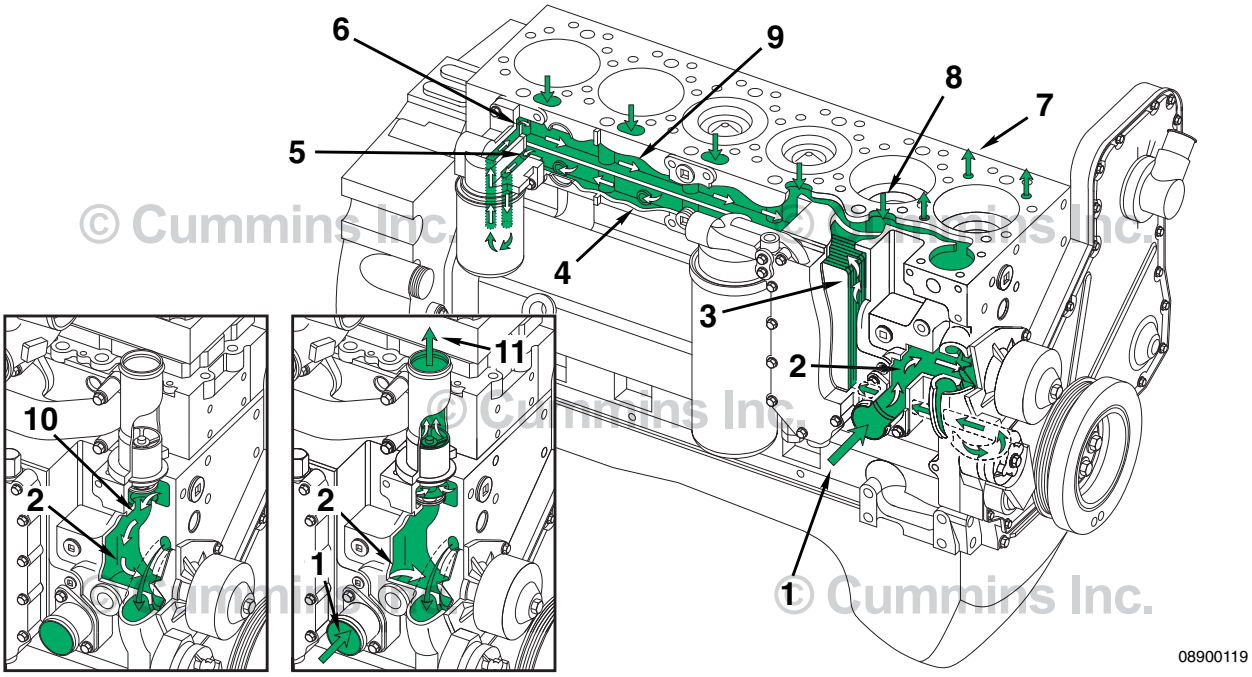

Internal Engine Coolant Flow, All Applications

⚠CAUTION⚠

Never operate the engine without a thermostat. Without a thermostat, the coolant will not flow to the radiator, and the engine will overheat.

NOTE: The thermostat flow shown is **not** for QSL9 keel cooled engines. On QSL9 keel cooled marine engines, the thermostat is located in the keel cooled thermostat housing. See flow diagram below.

1 Coolant inlet from radiator
2 Water pump suction
3 Coolant flow through lubricating oil cooler
4 Block lower water manifold (to cylinders)
5 Coolant filter inlet (optional)
6 Coolant filter outlet (optional)
7 Coolant supply to cylinder head
8 Coolant return from cylinder head
9 Block upper water manifold
10 Thermostat bypass
11 Coolant return to radiator

To buy Cummins Parts and Service Manuals, Training Guides, or Tools go to our website at https://store.cummins.com

Flow Diagram, Cooling System

General Information

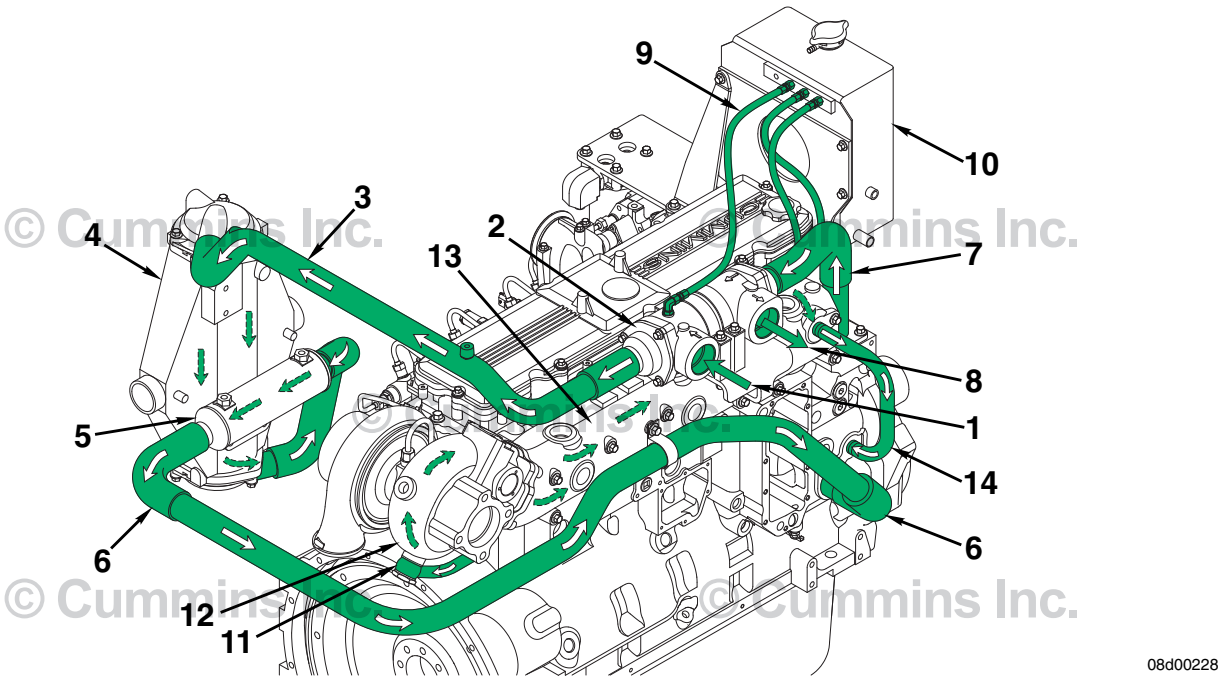

QSL9 with Keel Cooled (Engine Coolant)

1 Engine coolant return from keel cooler
2 Keel cooler thermostat housing
3 Engine coolant to aftercooler
4 Aftercooler
5 Engine coolant through marine gear oil cooler
6 Engine coolant to water pump
7 Engine discharge to keel cooler thermostat
8 Engine coolant to keel cooler
9 Cooling system housing vent line
10 Expansion tank
11 Engine coolant from engine to turbocharger
12 Turbocharger turbine housing
13 Exhaust manifold
14 Engine coolant return from exhaust manifold to water pump.

To buy Cummins Parts and Service Manuals, Training Guides, or Tools go to our website at https://store.cummins.com

Flow Diagram, Cooling System

General Information

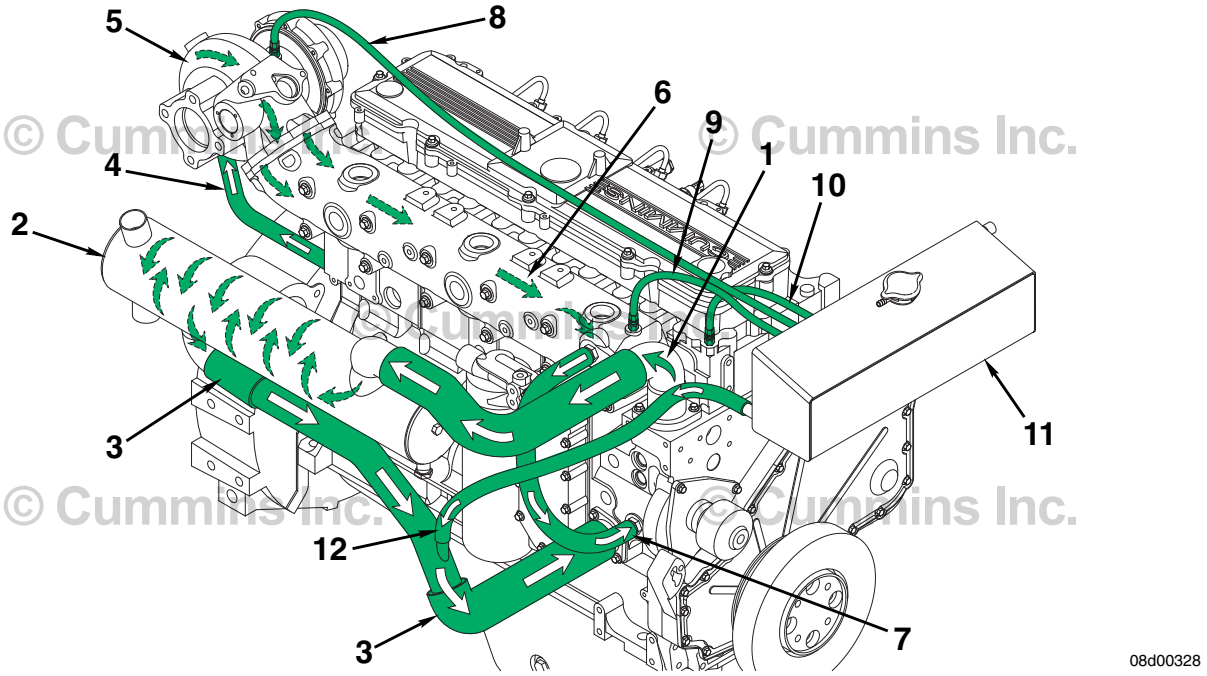

QSL9 with Heat Exchanger (Engine Coolant)

1 Coolant from thermostat to heat exchanger
2 Heat exchanger
3 Coolant return from heat exchanger to water pump
4 Turbocharger coolant supply from cylinder block
5 Turbocharger with water cooled turbine housing
6 Water cooled exhaust manifold
7 Coolant return from exhaust manifold to water pump
8 Turbocharger coolant vent line
9 Exhaust manifold coolant vent line
10 Cylinder head coolant vent line
11 Expansion tank
12 Coolant makeup to water pump from expansion tank.

To buy Cummins Parts and Service Manuals, Training Guides, or Tools go to our website at https://store.cummins.com

Flow Diagram, Cooling System

General Information

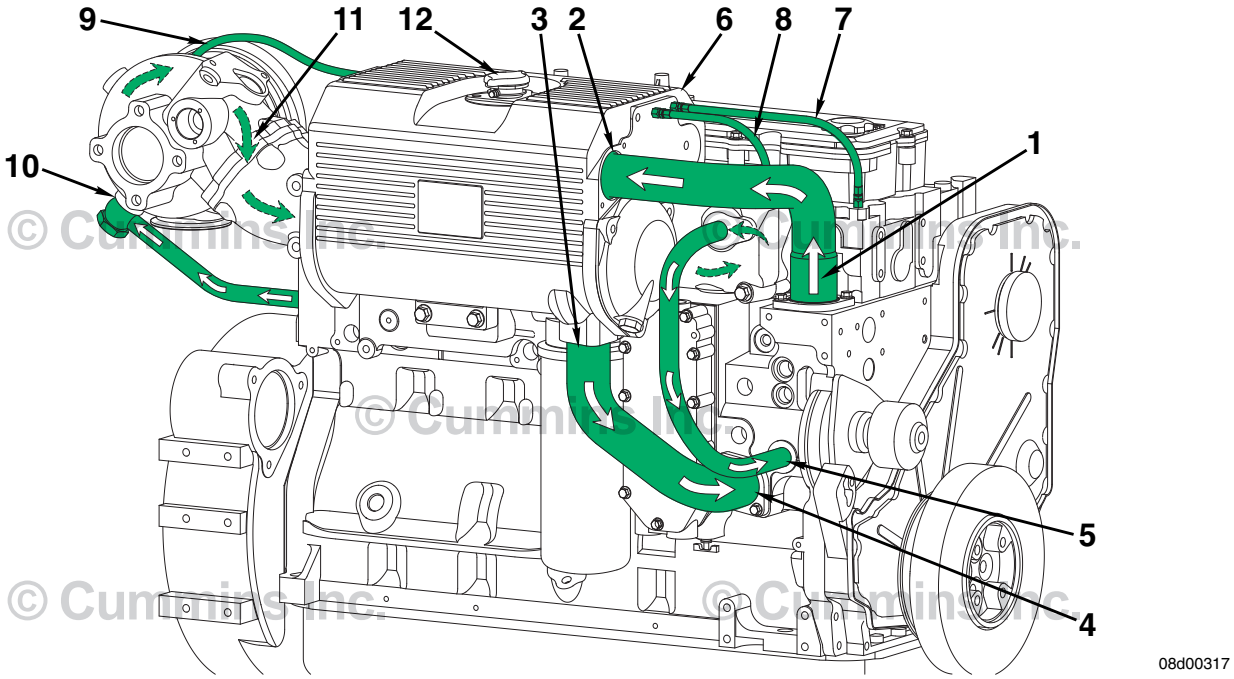

QSC8.3 Engine Coolant

1 Coolant from thermostat
2 Heat exchanger coolant inlet
3 Heat exchanger coolant outlet
4 Water pump coolant inlet from heat exchanger
5 Water pump coolant inlet from exhaust manifold
6 Expansion tank
7 Coolant vent line from cylinder head to expansion tank
8 Coolant vent line from exhaust manifold to expansion tank
9 Coolant vent line from turbocharger to expansion tank
10 Turbocharger coolant inlet from cylinder block
11 Coolant from turbocharger to exhaust manifold
12 Expansion tank fill cap.

To buy Cummins Parts and Service Manuals, Training Guides, or Tools go to our website at https://store.cummins.com

Flow Diagram, Cooling System

General Information

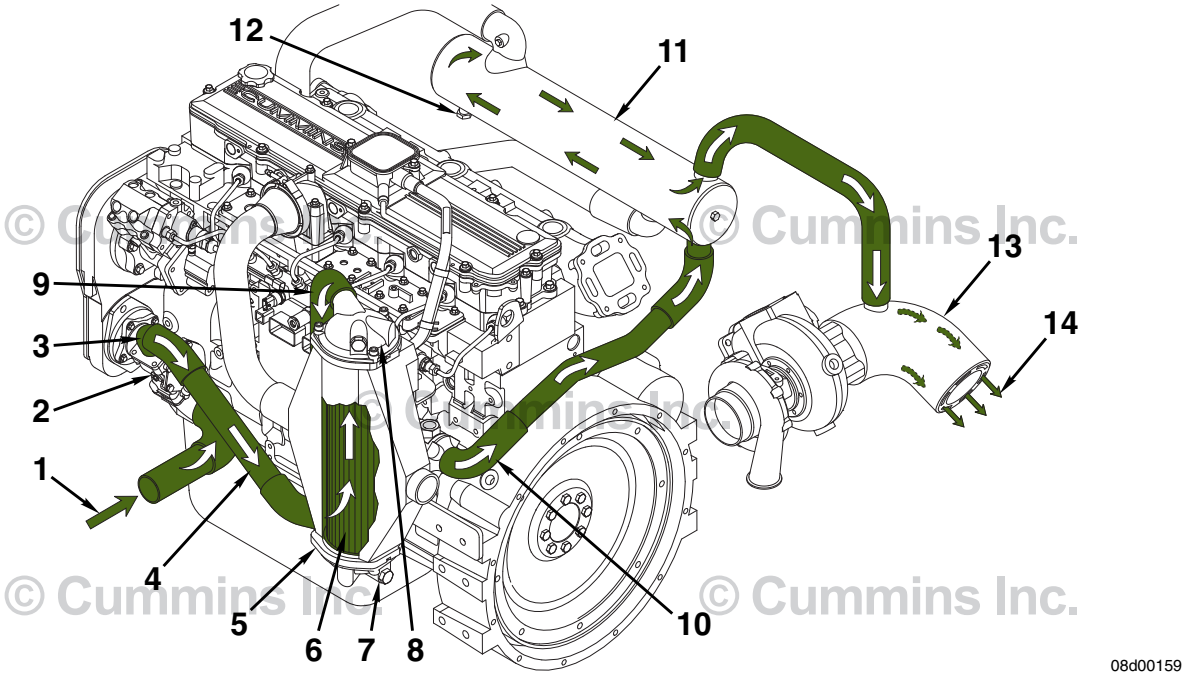

QSL9 Sea Water Cooled (Heat Exchanger), Marine Applications

1 Sea water pump inlet
2 Sea water pump
3 Sea water pump discharge to fuel cooler
4 Fuel cooler
5 Aftercooler sea water inlet
6 Aftercooler
7 Aftercooler lower zinc anode
8 Aftercooler upper zinc anode
9 Aftercooler sea water outlet to marine gear oil cooler
10 Marine gear oil cooler sea water outlet to heat exchanger
11 Heat exchanger
12 Heat exchanger zinc anode
13 Exhaust elbow
14 Sea water discharge.

To buy Cummins Parts and Service Manuals, Training Guides, or Tools go to our website at https://store.cummins.com

Flow Diagram, Cooling System

General Information

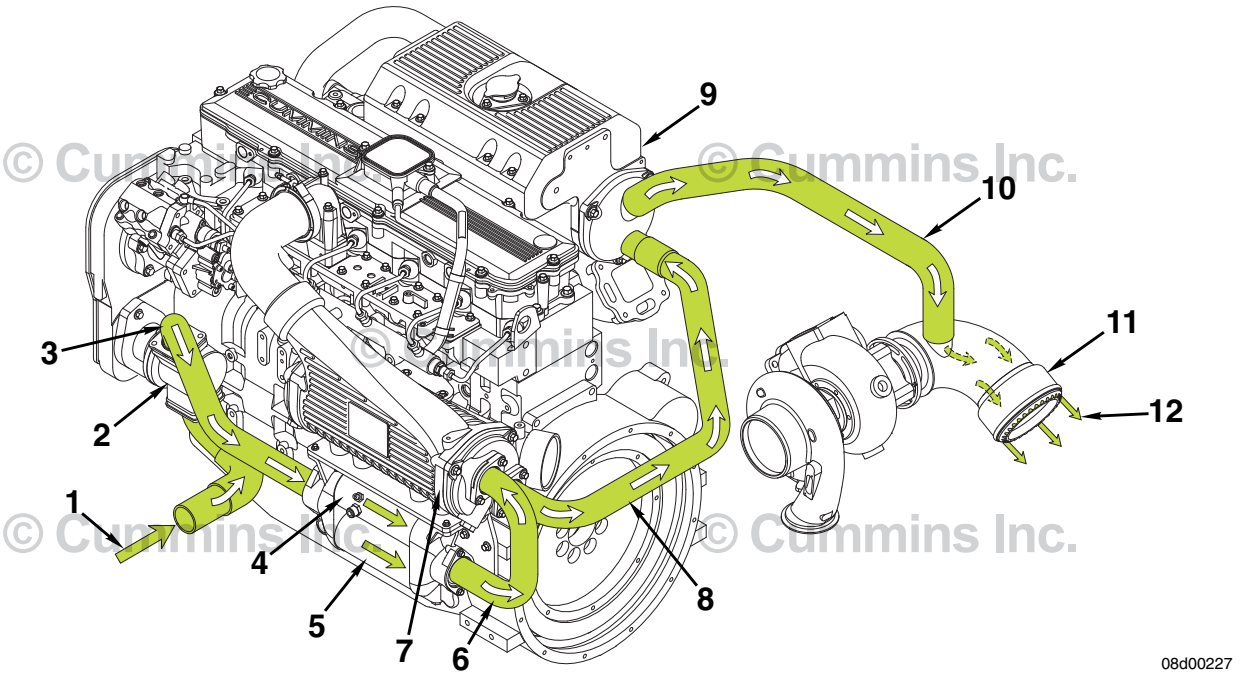

© Cummins Inc.

QSC8.3 Sea Water Cooled (Heat Exchanger), Marine Applications

1 Sea water pump inlet
2 Sea water pump
3 Sea water pump discharge to combination marine gear oil and fuel cooler
4 Fuel cooler
5 Marine gear oil cooler
6 Combination marine gear oil cooler and fuel cooler discharge to aftercooler inlet
7 Aftercooler
8 Aftercooler discharge to heat exchanger
9 Heat exchanger/expansion tank assembly
10 Heater exchanger discharge to exhaust elbow
11 Exhaust elbow
12 Sea water discharge.

To buy Cummins Parts and Service Manuals, Training Guides, or Tools go to our website at https://store.cummins.com

Flow Diagram, Air Intake System

General Information

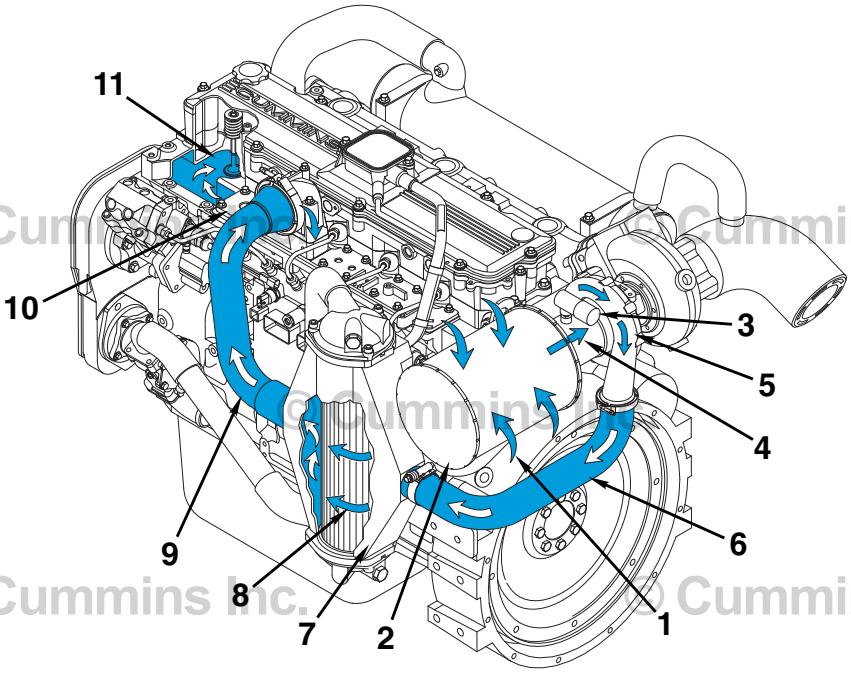

© Cummins Inc.

QSC8.3 and QSL9 Marine Aftercooled Engines

NOTE: The graphic above is the QSL9 engine configuration. The aftercooler on the QSC8.3 engine mounts to the engine differently, but the air flow from the air inlet to the combustion chamber is the same.

1 Air inlet to air filter
2 Air filter assembly
3 Intake air restriction indicator
4 Air inlet to turbocharger compressor
5 Turbocharger compressor discharge
6 Air discharge from turbocharger compressor to aftercooler inlet
7 Aftercooler air inlet
8 Aftercooler
9 Air discharge from aftercooler to intake manifold
10 Air manifold
11 Intake valve.

To buy Cummins Parts and Service Manuals, Training Guides, or Tools go to our website at https://store.cummins.com

Flow Diagram, Exhaust System

General Information

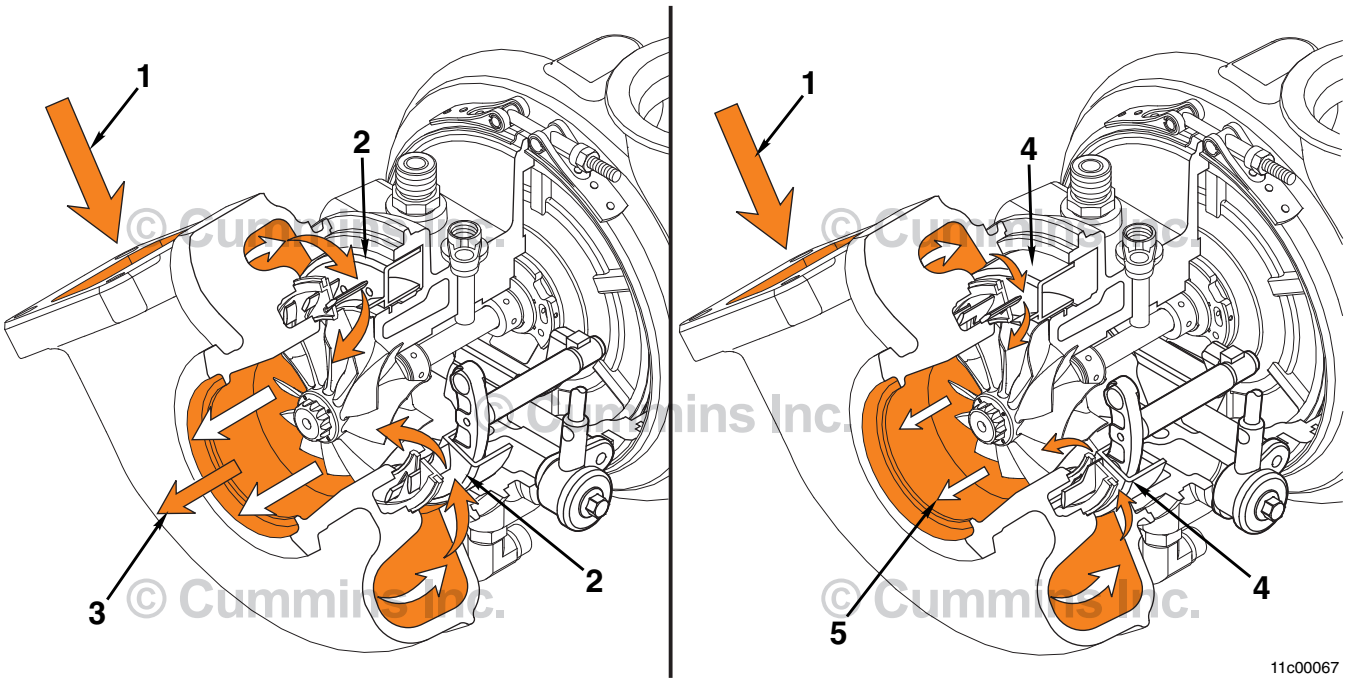

Variable Geometry Turbocharger

1 Exhaust gas in
2 Sliding nozzle open
3 Exhaust gas low velocity flow
4 Sliding nozzle closed
5 Exhaust gas high velocity flow

To buy Cummins Parts and Service Manuals, Training Guides, or Tools go to our website at https://store.cummins.com

Flow Diagram, Exhaust System

General Information

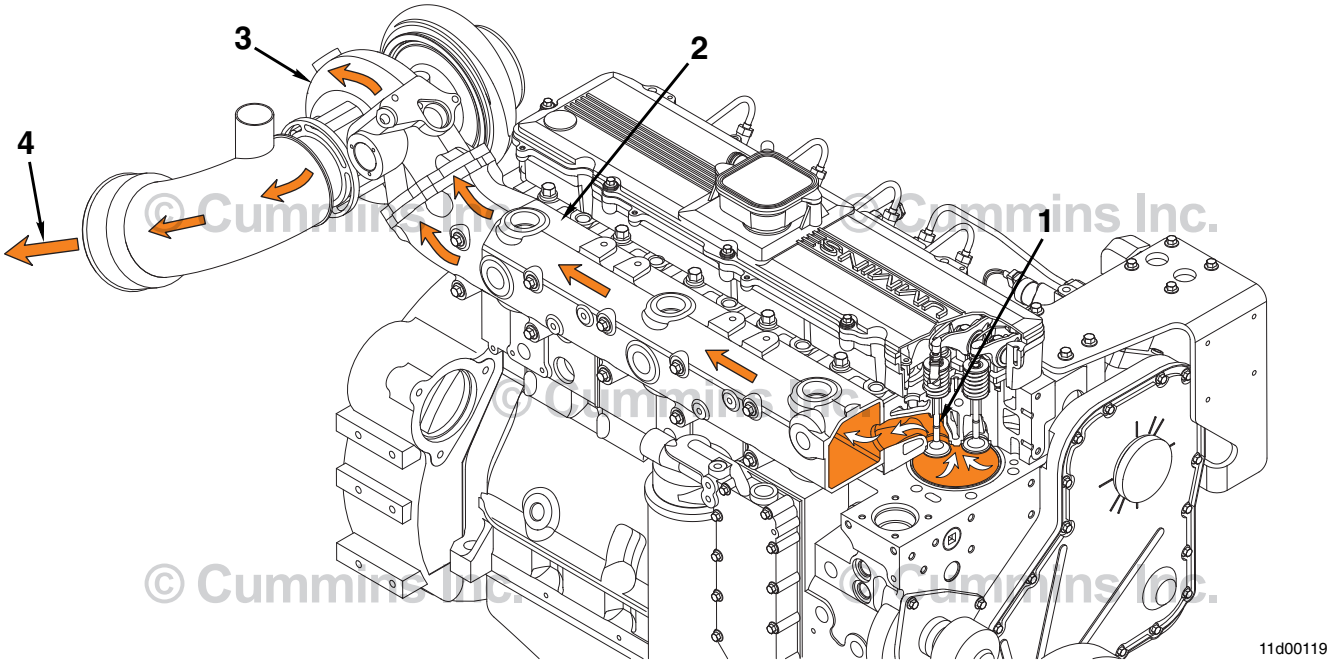

Marine Applications

1 Exhaust valve
2 Exhaust manifold
3 Turbocharger turbine housing
4 Engine exhaust.

To buy Cummins Parts and Service Manuals, Training Guides, or Tools go to our website at https://store.cummins.com

Cummins Service Publications Electronic Book on DVD-ROM

Enclosed, we've included on DVD-ROM, an electronic copy of this publication in Adobe® Acrobat® format (PDF) for your personal use and reference. **Before you begin to use the DVD-ROM, you must accept the terms and conditions of the accompanying License Agreement as a "Licensee". This accompanying license agreement begins on the next page. Also, please read the "Cummins Service Publications Electronic Book on DVD-ROM Information" printed section, beginning on the page after the license agreement.** This section includes information about this DVD-ROM including System Requirements, Local Administrative Rights requirements, How to Use, Helpful Support Tips and other information.

CUMMINS SERVICE PUBLICATIONS
ELECTRONIC BOOK ON DVD-ROM
SOFTWARE LICENSE AGREEMENT

THIS SOFTWARE LICENSE AGREEMENT ("License Agreement") between Cummins Inc. ("Cummins") and Licensee sets forth the terms and conditions governing the license for use of the Cummins Service Publications Electronic Book on DVD-ROM media ("DVD-ROM Media"). The DVD-ROM Media and all of its contents constitute the entire product referred to herein, and is sometimes referred to as the "Licensed Software." The DVD-ROM Media contains a written notice referring to this License Agreement. By breaking the seal on the DVD-ROM Media, you accept the terms and conditions of this License Agreement as a "Licensee". If you do not accept the terms and conditions of this License Agreement, you must return the DVD-ROM Media and all accompanying printed materials within 30 days of your purchase. Your return of the DVD-ROM Media and printed materials must be to the place of your original purchase, either a Cummins distributor or Gannett Direct Marketing Services, Inc. Upon return as provided above, you will receive a full refund of your purchase price, excluding any shipping charges.

R E C I T A L S:

WHEREAS, Cummins has developed certain computer programs and support documentation (which may contain electronic copies of service manuals or other information) useful in supporting, diagnosing, repairing, and maintenance of engines manufactured or sold by Cummins;

WHEREAS, Licensee desires use the Licensed Software, as permitted in this License Agreement, to assist Licensee in the support, diagnosis, repair, and maintenance of engines manufactured or sold by Cummins;

THEREFORE, in consideration of the above premises and the mutual covenants contained herein, Cummins and Licensee agree as follows:

1. License Grant and Restrictions

a. Cummins hereby grants to Licensee a non-exclusive, non-transferable and non-sublicensable license to use the Licensed Software to assist in the support, diagnosis, repair and maintenance of engines manufactured or sold by Cummins. Each copy of the Licensed Software is specifically licensed only for its intended purpose, and shall not be used for any other purpose. The Licensed Software shall not be sublicensed, sold, or otherwise distributed or shared with others, in any media or format.

b. The Licensed Software provides you with the capability to view the support documentation and to perform searches. The Licensed Software does not permit you to print, copy files, change content, extract information, make annotations, or perform any functions other than "view" and "search". The Licensed Software is copy protected, encrypted, and in read-only format. The only method to view the support documentation is from the original DVD-ROM. The licensed product may be offered as a DVD-ROM Media bundled with a printed publication or it may be offered as a stand alone DVD-ROM Media product. In either case, the Licensed Software is intended for use by the Licensee only. Copying or distribution of the Licensed Software from the DVD-ROM Media is expressly prohibited. The Licensed Software will not function from a network server DVD-ROM drive. The Licensed Software will function only in a DVD-ROM drive directly connected to your computer. Licensee is authorized to use the Licensed Software on more than one computer, but only one computer at a time.

c. Licensee agrees to use the Licensed Software in strict accordance with Cummins' published service practices and/or product warranty guidelines for the sole purpose of assisting in the support, diagnosis, repair and maintenance of engines manufactured or sold by Cummins.

d. Cummins may at any time, or from time to time, offer for sale or provide free of charge upgrades or revisions ("Upgrades") to the Licensed Software, but shall be under no obligation to do so. Further, Cummins may at any time, or from time to time, publish a newer version of the Licensed Software ("Newer Version"), but shall not be under any obligation to do so, nor shall Cummins have any obligation to provide the Newer Version to Licensee or to assure backward compatibility of the Newer Version of the Licensed Software. In the event an Upgrade or Newer Versions of the Software is published, Cummins shall determine in its sole discretion the manner in which the Upgrade or Newer Version is published, offered, and/or distributed. An Upgrade or Newer Version may include changes, updates or revisions to the support documents included as part of the Licensed Software, as determined in the sole discretion of Cummins.

e. All rights relating to the Licensed Software not specifically granted to Licensee pursuant to this License Agreement shall be retained by Cummins.

f. Licensee acknowledges that the Licensed Software may include software that Cummins has obtained or licensed from a third party, and Licensee agrees that the terms and conditions of this License Agreement shall be subject to any such third-party software. Licensee agrees to abide by any additional or modified terms and conditions with respect to such third-party software if reasonably requested in writing by Cummins and/or the third party.

2. Markings

Licensee shall use its best efforts to preserve all copyright, trademark, ownership or other notices, legends or markings on the Licensed Software as originally provided by Cummins. In the event the Licensed Software contains any copyright or other message embedded therein, Licensee shall not modify or remove such embedded message.

3. Title

Title and full ownership rights to the Licensed Software and any Upgrades thereto, including all copyright rights therein, shall remain with Cummins and/or its subsidiaries. Cummins expressly retains all rights that it may have under U.S. or foreign laws or international treaties relating to the Licensed Software, except for those rights expressly granted to Licensee herein.

4. Licensee Expenses

Costs and expenses incurred by Licensee relating to any use of the Licensed Software, or any other costs not specifically agreed upon by the parties in writing, shall be the responsibility of Licensee.

5. Payment

The sales price for the Licensed Software does not include any federal, state, local or other governmental taxes, excise taxes, or other tariffs which may be imposed on the sale, transportation, production, storage, or export of the Licensed Software. Any and all such taxes and costs shall be paid by Licensee and Cummins shall have no liability therefor.

6. Support

Cummins may provide Help Desk support to for the current version and the most recent prior version of the Licensed Software. The Help Desk support will be limited to computer operational and functionality issues only. No Help Desk support will be provided for substantive information published in the Licensed Software (i.e., how to use the product to support, diagnose, repair, and maintain engines).

7. No Modification by Licensee

Licensee agrees not to translate, reverse assemble, reverse compile, adapt, alter, modify or change in any way the Licensed Software, or any Upgrade thereto.

8. Warranties

Cummins warrants that the DVD-ROM Media containing the Licensed Software shall be free from defects in material or workmanship for a period of ninety (90) days from the date of delivery to Licensee.

9. Warranty Disclaimer

THE LICENSED SOFTWARE AND ANY AND ALL UPGRADES THERETO ARE LICENSED "AS IS" WITH THE EXCEPTION OF THE WARRANTIES SPECIFICALLY PROVIDED HEREIN. CUMMINS DOES NOT CLAIM AND DOES NOT WARRANT THAT THE LICENSED SOFTWARE WILL RUN ERROR FREE. WITH THE EXCEPTION OF THE WARRANTIES PROVIDED HEREIN, CUMMINS DISCLAIMS ALL WARRANTIES, EITHER EXPRESS OR IMPLIED, REGARDING THE LICENSED SOFTWARE, ITS MERCHANTABILITY OR ITS FITNESS FOR ANY PARTICULAR PURPOSE, OR NON-INFRINGEMENT, AND CUMMINS WILL NOT OTHERWISE BE LIABLE FOR ANY INDIRECT, INCIDENTAL OR CONSEQUENTIAL DAMAGES RESULTING FROM LICENSEE'S USE OF THE LICENSED SOFTWARE OR FOR ANY ERROR OR DEFECT IN THE LICENSED SOFTWARE. THE LIABILITY OF CUMMINS TO LICENSEE SHALL NOT EXCEED THE TOTAL AMOUNT OF PAYMENTS RECEIVED FROM LICENSEE AND ACCEPTED BY CUMMINS IN CONSIDERATION FOR THIS LICENSE.

10. Government Licensee

If Licensee is acquiring the Licensed Software for, or on behalf of, any department, division or unit of the United States Government, the following provisions shall be applicable:

The Government acknowledges and agrees that the Licensed Software and documentation relating thereto were developed at private expense and no part of the Licensed Software or documentation relating thereto is in the public domain.

The Government acknowledges Cummins Inc. representation that the Licensed Software is "Restricted Computer Software" as that term is defined in Clause 52.227-19 of the Department of Federal Acquisition Regulation Supplement (DFARS). The Government agrees that:

(i) if the Licensed Software is supplied to the Department of Defense (DoD), the Licensed Software is classified as "Commercial Computer Software" and the Government is acquiring only "restricted rights" in the Licensed Software and documentation relating thereto as that term is defined in Clause 252.227-7013(c)(1) of the DFARS, and

(ii) if the Licensed Software is supplied to any unit or agency of the United States Government other than the Department of Defense, the Government's rights in the Licensed Software and documentation relating thereto will be defined in Clause 52.227-19(c)(2) of the Federal Acquisition Regulation (FAR).

11. Restricted Rights Legend

Use, duplication, or disclosure by the Government is subject to restrictions set forth in subparagraph (c)(1)(ii) of the Rights in Technical Data and Computer Software clause at DFARS 252.227-7013, Cummins Inc., P.O. Box 3005, Columbus, IN 47202.

12. Confidentiality

a. Licensee hereby acknowledges that the Licensed Software contains confidential proprietary information. Consistent with the purpose of this License Agreement, Licensee agrees to use its best efforts not to release, disclose or otherwise permit unauthorized access to such confidential information.

b. Cummins and Licensee agree to clearly mark written materials as "confidential" if they are to be treated as confidential. Verbal communications that are confidential in nature will be identified as so before, during, or immediately after the communication.

c. Licensee will use its best efforts to ensure that all individuals who are provided access to the Licensed Software under this License Agreement will observe and perform this nondisclosure covenant.

13. Termination of License Agreement

a. Cummins may terminate this agreement for cause, such cause including, but not limited to, supporting, diagnosing, repairing, modifying or the maintenance of Cummins engines or any component thereof when such activities are not authorized by the owner of such engines.

b. In the event of termination of this License Agreement, all rights granted by this License Agreement shall revert to Cummins. Upon termination of this License Agreement, Licensee will deliver to Cummins all DVD-ROM Material and other material furnished by Cummins pertaining to the Licensed Software or certify that all such materials have been destroyed.

c. In the event of termination of this License Agreement, Licensee and Cummins shall remain obligated with respect to the provisions of this License Agreement relating to confidentiality of information.

14. Completeness

Licensee and Cummins agree that this License Agreement constitutes the complete agreement and understanding between the parties relating to Licensed Software and Upgrades thereto. This License Agreement supersedes all prior agreements, understandings, and negotiations whether written or verbal with respect to the subject matter hereof. This License Agreement can only be modified by a written agreement signed by both parties.

15. Notices

Any questions concerning this License Agreement, any inquiries related to the Licensed Software, and any notices to Cummins pursuant to this License Agreement should be directed to Cummins Inc., Electronic Publications Support, MC 95030, 1460 National Road, Columbus, IN 47201. Cummins Inc. may direct that notices be sent to a different person and/or address by so requesting in writing to the other party.

16. Export Regulations

Licensee understands that the Export Administration Regulations of the Department of Commerce of the United States may prohibit the export of the Licensed Software to certain countries and agrees to conform to those regulations. Licensee also agrees to conform to these regulations. Licensee shall indemnify Cummins against any loss related to Licensee's failure to conform to those regulations.

17. Governing Law

This License Agreement shall be governed by and construed in accordance with the laws of the State of Indiana.

18. Attorneys' Fees

In the event of any legal action or other proceeding that is brought about to enforce this License Agreement, the prevailing or successful party shall be entitled to recover reasonable attorneys' fees as well as other costs incurred in that action or proceeding in addition to any compensation to which it may be entitled.

19. License Agreement Successors and Assigns

This License Agreement is not assignable by Licensee without the prior written consent of Cummins, and any assignment by Licensee in contravention of this provision shall be void and without effect. The terms and conditions of this License Agreement shall inure to the benefit of and be enforceable by Cummins and the successors and assigns of Cummins' interest in this License Agreement and/or Cummins' ownership of the Licensed Software.

Cummins Service Publications Electronic Book on DVD-ROM Information

The enclosed DVD-ROM provides you with the capability to view this publication electronically as well as perform searches. This DVD-ROM is copy protected and will not allow Printing, Changing of Content, Extracting Content or Commenting / Annotating of the PDF file.

This DVD-ROM is read only, and you will not be able to copy files from the DVD-ROM and have them open or function in any manner. The only method to view the electronic publication is from the original DVD-ROM.

This DVD-ROM is intended for use by the owner of the publication only. Copying or distribution of content from this DVD-ROM is expressly prohibited. This DVD-ROM will not function from a network server DVD-ROM drive. It will function only in a DVD-ROM drive directly connected to your computer.

This DVD-ROM requires that you have Local Administrative rights in order to use. See the System requirements section for additional details.

System Requirements:

Use of the Cummins Service Publications Electronic Book on DVD-ROM requires Adobe Acrobat Reader, or Adobe Acrobat software to be installed on your computer. This product has been tested for compatibility with Adobe Acrobat Reader software. It may function properly with earlier or later versions of Adobe Acrobat DC, but testing has not been performed. Adobe Acrobat Reader is available as a free download from www.adobe.com.

The Cummins Service Publications Electronic Book on DVD-ROM product requires the following system components:

- Microsoft Windows Auto-Play must be enabled on your computer (it is enabled by default when Windows is installed)
- DVD-ROM Drive
- Color Monitor with at least 1024x768 resolution graphics
- Microsoft Windows 7, Microsoft Windows 8, or Microsoft Windows 10. Use on other Microsoft Operating Systems may be compatible but testing has not been performed, and while it may function, it is not supported. While we try to maintain compatibility with all popular Microsoft Operating Systems, compatibility with the listed Microsoft Operating Systems is subject to change.
- Recommended memory, processor speed and available hard-disk space is in accordance with respective Microsoft Operating System Guidelines, as well as Adobe Acrobat system requirements.

Note: The Cummins Service Publications Electronic Book on DVD-ROM product is not Macintosh compatible.

About required Local Administrative Rights:

The copy protection software requires direct access to the DVD-ROM on which the protected content is stored. Protected content is only accessible to users with restricted accounts if allowed each time the disk is used.

In order to allow the software to enable direct access to DVD-ROM drives under Microsoft Windows, without user intervention, your logon account/profile must have Local Administrative Rights. If the computer is set up in Restricted Mode, or your logon account/profile does not have Local Administrative Rights, then, with approval of your I.T. department or the owner of your computer, you can choose from the following options to allow the Cummins Service Publications Electronic Book on DVD-ROM to function properly:

- Have your computer account enabled to have Local Administrative rights and then you can run the Cummins Service Publications Electronic Book on DVD-ROM - OR -
- Have a user with Local Administrative Rights logon to your computer run the DVD-ROM content one time, and then restart this computer. By doing this, the necessary files will be installed, and your computer will be enabled to have direct access to DVD-ROM drives. It is necessary to restart the computer after this has been done. For all future needs, you can run the Cummins Service Publications Electronic Book on DVD-ROM under your own account, without requiring your logon account/profile to have Local Administrative Rights. (Note: This needs to be done only once for any Cummins Service Publications Electronic Book on DVD-ROM and then does not need to be done again for other Cummins Service Publications Electronic Book on DVD-ROM titles you may own that are of the same version of protection software.)

Cummins Service Publications Electronic Book on DVD-ROM Information

About the Copy Protection Software:

- This product may upgrade the proprietary copy protection software files it uses that are placed on your computer system to a newer version, if an older version exists on your computer. If you have DVD-ROM copy protected items from other companies, and they use older versions of the same Truscont copy protection software than the Cummins Service Publications Electronic Book on DVD-ROM uses, it may render them incompatible for use on your computer.

How to Use the Cummins Service Publications Electronic Book on DVD-ROM:

To use the DVD-ROM, simply insert the DVD-ROM into your computer and it should automatically run, open Adobe Acrobat and open the Electronic Book. This requires Microsoft Windows AutoPlay to be enabled, and Adobe Acrobat.

Helpful Support Tips:

- If Windows AutoPlay is not enabled, navigate with Windows Explorer to your DVD-ROM drive and double click on the DVD-ROM drive letter to open it. Then double-click on the program autorun_tc.exe.
- If the Cummins Service Publications Electronic Book on DVD-ROM does not function, see the prior section on “About required Local Administrative Rights:” in this documentation and verify you have Local Administrative Rights on your computer in order to run the DVD-ROM.
- While this product has been known to be very compatible with DVD-ROM drives, there are certain models of DVD-ROM drives that may be incompatible with this product.

Special Instructions for Cummins PowerSweep PC Users:

(This only applies to Cummins Inc. & Distributor Employees):
Cummins PowerSweep PC users that DO NOT have Local Administrative rights to their PC will require you to place an order from the Cummins Software Shelf. If you are a Cummins Inc. or Distributor Employee who wants to use these DVD-ROM’s, and you have a PowerSweep PC – please order the ‘Truscont’ software from the Cummins Software Shelf. The Software Shelf personnel will contact you to arrange a desk side installation from the DVD-ROM that you have. Once software is installed, first reboot your PC, then attempt to read your encrypted DVD-ROM manual while Cummins Software Shelf personnel are present.

Cummins Service Publications Electronic Book on DVD-ROM Information

Electronic Book Technical Support:

Support for this product is available from Monday through Friday, excluding US Holidays, from 8 a.m. to 5 p.m.
You may call (502) 540-4981 for telephone support.
For e-mail support, please e-mail ebooksupport@merrickprinting.com.

DVD-ROM Media Replacement Options:

Up to 90 days from date of purchase:

Within the first 90 days from your date of purchase, if your copy of an Electronic Book on DVD-ROM does not function, and after a Cummins Electronic Book Technical Support Technician has confirmed the situation and authorized its replacement by providing you an RMA#, you may send back the DVD-ROM for a free replacement. To do so, you must package the DVD-ROM and ship/mail, with postage pre-paid by you, to the below address. You must also include a photocopy of the original invoice for proof of purchase of the publication clearly indicating the bulletin # and the purchase date. The RMA# must be on the address information of the package. If the proof of purchase copy of the invoice is not enclosed, your request will not be able to be processed and will not be returned. Delivery of the replacement will be shipped to you at no charge. Allow 3 to 4 weeks for your receipt of replacement copy. Note: Return only the non-functional DVD-ROM, do not return the entire printed publication. The replacement DVD-ROM maintains the original purchase/invoice date for the purposes of this replacement policy. This policy is subject to change at any time, without notice. For a copy of the most current replacement options policy, please e-mail ebooksupport@merrickprinting.com with your request.

Media Replacement Ship to Address:

Attn: Cummins Service Publications Electronic Book Technical Support
RMA#: XXXXXX (where XXXXXX is the RMA#)
808 E. Liberty Street
Louisville, KY 40204 U.S.A.

Cummins Service Publications Electronic Book on DVD-ROM is Copyright © Cummins Inc.
Adobe Acrobat Reader is a registered trademark of Adobe Systems Incorporated.
Microsoft and Windows are either a registered trademark or trademark of Microsoft Corporation in the United States and/or other countries.
Intel and Pentium are trademarks of Intel Corporation.
TrusCont™ is a trademark of TrusCont Ltd.
All other names and products used herein are trademarks for their respective owner.

Section L - Service Literature

Section Contents

Page
Additional Service Literature L-1
General Information L-1
Cummins Customized Parts Catalog L-3
General Information L-3
Ordering the Customized Parts Catalog L-3
Service Literature Ordering Location L-2
Contact Information L-2

To buy Cummins Parts and Service Manuals, Training Guides, or Tools go to our website at https://store.cummins.com

This Page Left Intentionally Blank

Additional Service Literature

General Information

The following publications can be purchased.

Bulletin Number	Title of Publication
3666271	ISC, QSC8.3, and ISL Electronic Control System Troubleshooting and Repair Manual
4021416	ISB, ISBe2, ISBe3, ISBe4, QSB4.5, QSB5.9, QSB6.7, ISC, QSC8.3, ISL, ISLe3, ISLe4, and QSL9 CM850 (CM2850) Electronic Control System Troubleshooting and Repair Manual
4021418	ISC, ISCe, QSC8.3, ISL, ISLe3, ISLe4 and QSL9 Troubleshooting and Repair Manual
3666121	Holset® Air Compressors Master Repair Manual
4022281	SmartCraft™ Marine Control System
3666267	ISC CM554 Wiring Diagram
3666395	QSC CM554 Wiring Diagram
3666416	ISL CM554 Wiring Diagram
3666478	QSL9 CM554 Wiring Diagram
4021421	ISC and ISL CM850 Electronic Control Module Wiring Diagram
4021524	QSB4.5, QSB6.7, QSC8.3 and QSL9 CM850 (CM2850) Electronic Control System Wiring Diagram
4021598	ISLe4 CM850 Wiring Diagram
4081885	QSL9 and QSC8.3 Marine CM850 (CM2850) Electronic Control Module with SmartCraft™ 1.0 Wiring Diagram
4082045	SmartCraft™ 2.2 Zeus™ Wiring Diagram
4082050	SmartCraft™ 2.2 Digital Throttle and Shift (DTS) Wiring Diagram
4082051	SmartCraft™ 2.2 Non-Digital Throttle and Shift (Non-DTS) Wiring Diagram
4082052	Asius System Wiring Diagram
4021428	OISC, ISCe, and ISL Operation and Maintenance Manual
4021518	QSC8.3 and QSL9 Operation and Maintenance Manual
4021557	ISLe3 and ISLe4 (Common Rail Fuel System) Operation and Maintenance Manual
4021571	ISLe3 and ISLe4 (Common Rail Fuel System) Operation and Maintenance Manual
4081893	CMD Smartcraft™ Diesel View Configuration and Operation Manual
4081961	CMD System Speedometer and Tachometer Operation Manual
4021481	QSC8.3 and QSL9 Marine Owners Manual
4915536	QSC8.3 and QSL9 Owners Manual
3379000	Air for Your Engine
3379001	Fuel for Cummins® Engines
3379009	Operation of Diesel Engines in Cold Climates
3666132	Cummins® Coolant Requirements and Maintenance
3810303	Parts Reuse Guidelines
3810340	Cummins® Engine Oil and Oil Analysis Recommendations
3884649	Marine Recreational B and C Installation Directions
4021566	Diesel Exhaust Fluid (DEF) Specifications for Cummins® Selective Catalytic Reduction (SCR) Systems

To buy Cummins Parts and Service Manuals, Training Guides, or Tools go to our website at https://store.cummins.com

Service Literature Ordering Location

Contact Information

Service literature can be obtained from the appropriate location listed below:

- Any Cummins® Distributor
- Iron Mountain Fulfillment Services
  - Help Desk (U.S.): 1-800-646-5609
  - Help Desk (Outside U.S.): 1-630-283-2420
  - Email: CECOteam@ironmountain.com
- QuickServe® Online Store
  - https://store.cummins.com

To buy Cummins Parts and Service Manuals, Training Guides, or Tools go to our website at https://store.cummins.com

Cummins Customized Parts Catalog

General Information

Cummins is pleased to announce the availability of a parts catalog compiled specifically for you. Unlike the generic versions of parts catalogs that support general high volume parts content; Cummins Customized catalogs contain only the new factory parts that were used to build your engine.

The catalog cover, as well as the content, is customized with you in mind. You can use it in your shop, at your worksite, or as a coffee table book in your RV or boat. The cover contains your name, company name, address, and telephone number.

This new catalog was designed to provide you with the exact information you need to order parts for your engine. This will be valuable for customers that do not have easy access to Cummins QuickServe Online.

Additional Features of the Customized Catalog include:

- Engine Configuration Data
- Table of Contents
- Separate Option and Parts Indexes
- Service Kits (when applicable)
- ReCon Part Numbers (when applicable)

Ordering the Customized Parts Catalog

Ordering by Telephone

- North American Distributors, Original Equipment Manufacturers and Cummins Factory personnel order by calling Iron Mountain Fulfillment Services (IMFS) at 1-800-646-5609.
- International Distributors and Original Equipment Manufacturers order the CPC from their regional Cummins Parts Distribution Centers (PDC).
- International PDC orders are called into Iron Mountain at (++) 630-283-2420.
- Retail Credit Card Orders require a 2 step ordering process.

Ordering On-Line

Access the Cummins QSOL store at https://store.cummins.com

- Find the Customized Parts Catalog button located on the left of the homepage
- Select format. Your Price is also shown here
- Finalize Shopping Cart and Check Process as described on the website

North America call Iron Mountain Fulfillment Services (IMFS) at 800-646-5609, International customers call (++) 630-283-2420. Provide IMFS the catalog detail as described on the website. This step is required until we have our On Line form available.

Required information needed for your Customized Parts Catalog Order.

- Customer Name
- Street Address
- Company Name (optional)
- Telephone no.
- Credit Card No.
- Cummins Engine Serial Number (located on the engine data plate)

Unfortunately not all Cummins Engines can be supported by Customized Parts Catalogs. Engines older than 1984 or newer than 3 months may not have the necessary parts information to compile a catalog. We will contact you if this occurs and explain why we are unable to fill your order.

Customized Parts Catalogs are produced specifically for a single customer. This means they are not returnable for a refund. If we make an error and your catalog is not useable, we will correct that error by sending you a new catalog.

To buy Cummins Parts and Service Manuals, Training Guides, or Tools go to our website at https://store.cummins.com

Notes

Section S - Service Assistance

Section Contents

Page
Routine Service and Parts S-1
General Information S-1
Service Assistance S-1
General Information S-1

To buy Cummins Parts and Service Manuals, Training Guides, or Tools go to our website at https://store.cummins.com

This Page Left Intentionally Blank

Service Assistance

General Information

To contact the nearest Cummins® Authorized Repair Location, utilize the Service Locator at www.cummins.com.

Cummins Inc. provides a 24-hour, toll free telephone number to aid in technical and emergency service when a Cummins® Authorized Repair Location can **not** be reached or is unable to resolve an issue with a Cummins® product.

U.S. and Canada

- 1-800-CUMMINS™ (1-800-286-6467)

Mexico

- 01-800-CUMMINS (2866467)
- Email: contacto.mexico@cummins.com

Australia/New Zealand

- For Australia: 1-800-CUMMINS (1800 286 646)
- For New Zealand: 0-800-CUMMINS (0800 286 646)
- Email: marketingsouthpac@cummins.com

Brazil

- 0800 CUMMINS (0800 286 6467)
- Email: falecom@cummins.com

Europe

- From the UK, Ireland, Germany, France, and the Netherlands - Freephone: 00 8000 2866467
- Email: emea.customerassistance@cummins.com

China

- 400 810 5252 or (+86) 400 810 5252
- Email: customersupport@cummins.com

India

- 800 210 2525
- Email: powermaster-India@cummins.com

Russia

- Primary: +7 495 926 8624
- Alternate: +7 962 943 1211

For All Other Areas:

- +44 (0) 1327 886464

Routine Service and Parts

General Information

Personnel at Cummins Authorized Repair Locations can assist you with the correct operation and service of your system. Cummins has a worldwide service network of more than 5,000 Distributors and Dealers who have been trained to provide sound advice, expert service, and complete parts support. Check the telephone directory, refer to the directory in this section, or the Service Locator at www.cummins.com for the nearest Cummins Authorized Repair Location.

To buy Cummins Parts and Service Manuals, Training Guides, or Tools go to our website at https://store.cummins.com

Notes

Section SS - Seasonal Storage (Marine Only)

Section Contents

Page
Seasonal Storage SS-1
General Information SS-1

To buy Cummins Parts and Service Manuals, Training Guides, or Tools go to our website at https://store.cummins.com

This Page Left Intentionally Blank

Seasonal Storage

General Information

The following recommendations are to prepare your engine for winter storage. Not all recommendations will apply to your application. **Always** follow the manufacturer's recommendation on components **not** manufactured by Cummins Inc.

Fill the tank with good quality ASTM number 2D climatized diesel fuel.

Change the fuel filter. Refer to the fuel filter procedure in this manual.

Change the boat fuel-water separator element. Refer to the fuel-water separator element procedure in this manual.

Change the engine lubricating oil and filters. Refer to the lubricating oil and filters procedure in this manual.

Treat the fuel with diesel conditioner or algaecide to prevent the growth of algae in the fuel tank.

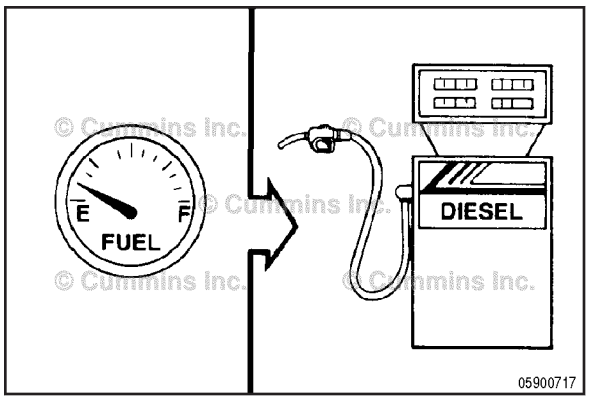

⚠CAUTION⚠

Do not run the engine with the sea water valve closed. This could damage the sea water pump and the engine. It is good practice to disable the engine or to place a tag at the helm(s) when the sea water valve is closed.

If the vessel is stored in the water, close the sea water valve on the vessel hull.

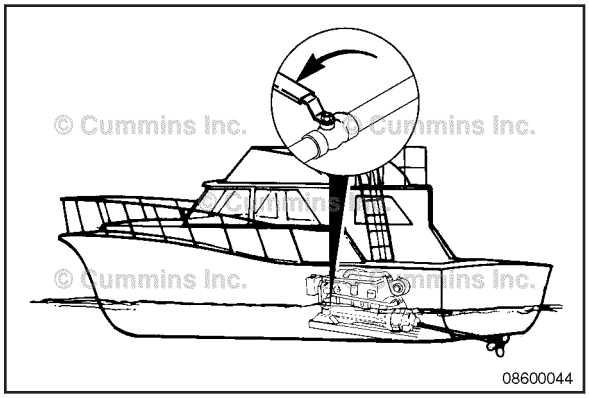

Drain the sea water system.

- Remove the drain plug on the marine gear cooler.
- Remove the zinc anodes from the heat exchanger and the aftercooler. Refer to the zinc anode procedure in this manual.
- Remove the drain plug from the air box side of the sea water aftercooler, if equipped.
- Remove the engine sea water hoses to drain sea water from the engine.

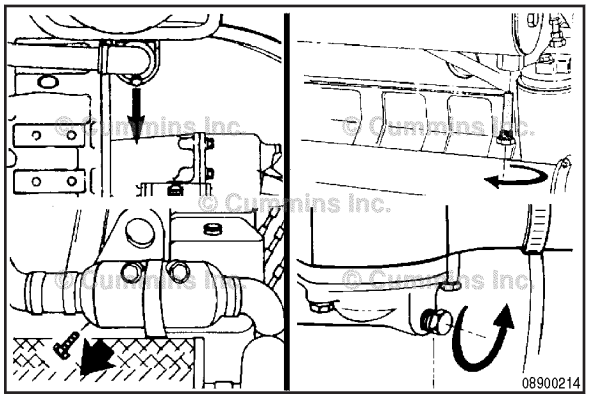

To buy Cummins Parts and Service Manuals, Training Guides, or Tools go to our website at https://store.cummins.com

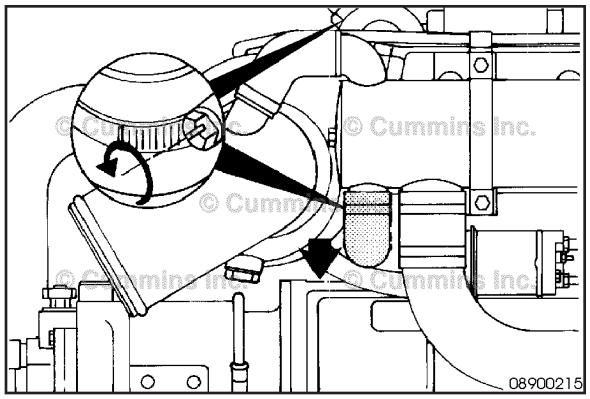

Remove the inlet and outlet hoses from the heat exchanger.

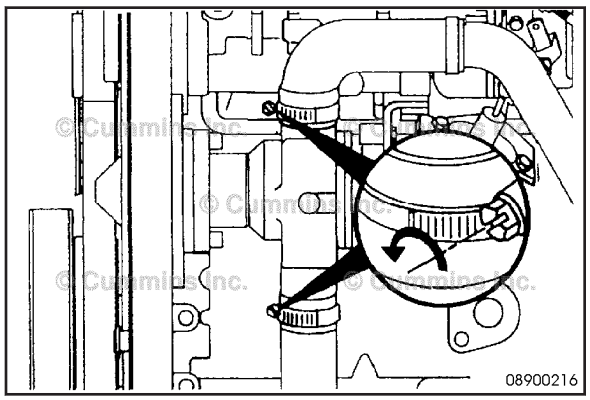

Remove the inlet and outlet hoses from the sea water pump.

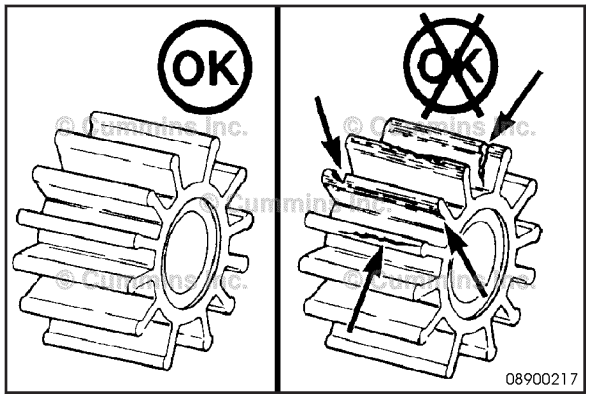

NOTE: There are two different types of pumps. Follow the correct procedure for the pump on this engine.

Remove and inspect the sea water pump impeller. Refer to the Sea Water Pump procedure in this manual.

If the sea water pump impeller is damaged or not reusable, do **not** install a new sea water pump impeller until the vessel is ready to be used.

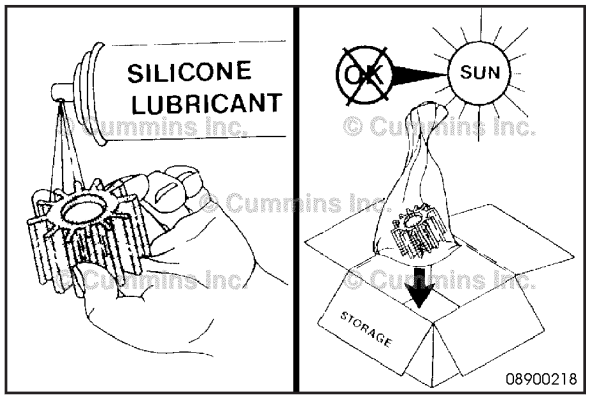

CAUTION

Do not expose the sea water pump impeller to sunlight, fluorescent lighting or any other source of ultra-violet light for an extended period of time. This will cause damage to the sea water pump impeller.

The sea water pump impeller **must** be lubricated with glycerin or a non-petroleum based lubricant such as silicon spray.

Store the sea water pump impeller for the season in a polyethylene bag and in a location that is void of sunlight, fluorescent light, or any other source of ultra-violet light.

To buy Cummins Parts and Service Manuals, Training Guides, or Tools go to our website at https://store.cummins.com

Install the zinc anodes in the heat exchanger and aftercooler. Refer to the zinc anode procedure in this manual.

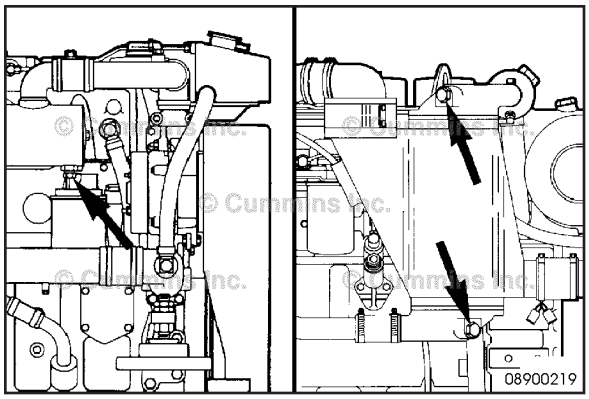

Loosen the heat exchanger sea water outlet clamps (1) and (2).

Rotate the sea water outlet connection to a vertical position (3).

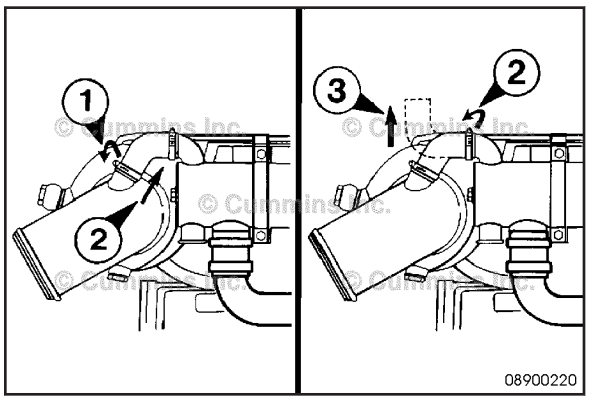

⚠WARNING⚠

Coolant is toxic. Keep away from children and pets. If not reused, dispose of in accordance with local environmental regulations.

Place a container under the heat exchanger sea water inlet.

Pour coolant, a 50/50 mixture of antifreeze and water, through the heat exchanger.

Do not allow excess coolant to drain in to the bilge.

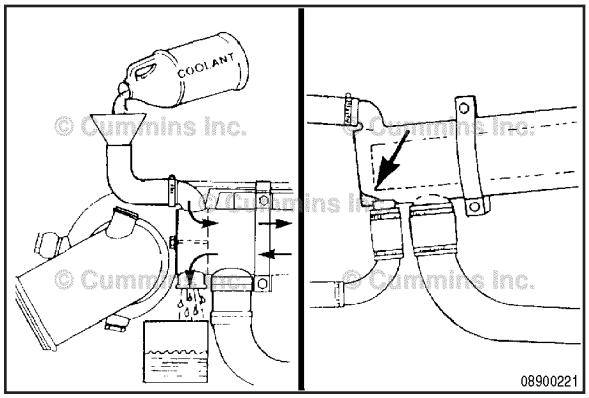

Rotate and connect the sea water outlet connection to the exhaust elbow (1).

Tighten the hose clamps (2).

Torque Value: 5 N•m [44 in-lb]

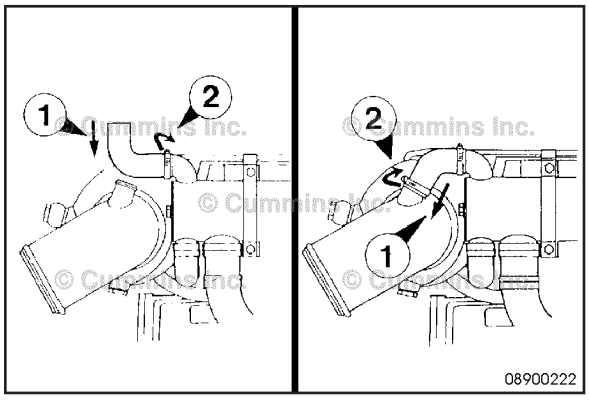

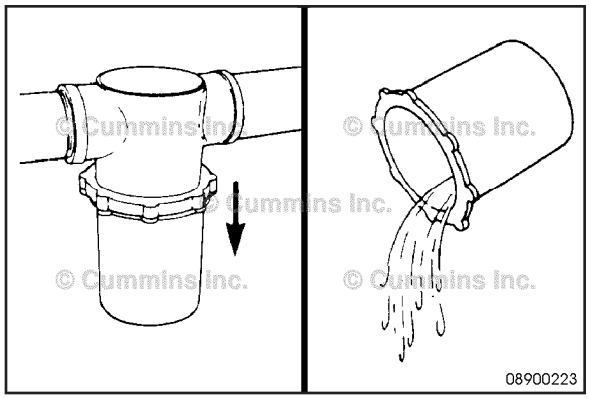

Empty the sea water strainer. Refer to the sea water strainer procedure in this manual.

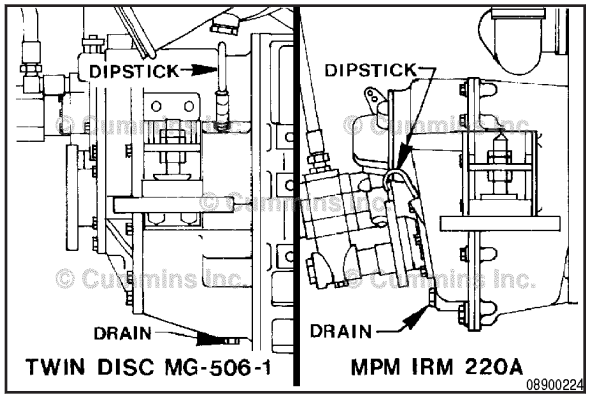

Perform the recommended maintenance procedures on the marine gear. Refer to the manufacturer owner's manual for recommendations and specifications.

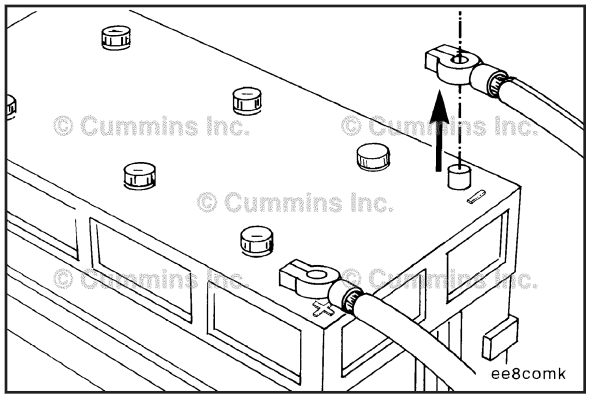

Disconnect and remove the battery. Follow the manufacturer's storage recommendations to store the battery.

Section TS - Troubleshooting Symptoms

Section Contents

Page
Engine Starts But Will Not Keep Running.....TS-41
Engine Vibration Excessive.....TS-42
Engine Will Not Crank or Cranks Slowly (Electric Starter).....TS-44

To buy Cummins Parts and Service Manuals, Training Guides, or Tools go to our website at https://store.cummins.com

This Page Left Intentionally Blank

Troubleshooting Procedures and Techniques

General Information

This guide describes some typical operating problems, their causes, and some acceptable corrections to those problems. Unless noted otherwise, the problems listed are those which an operator can diagnose and repair.

WARNING

Performing troubleshooting procedures NOT outlined in this section can result in equipment damage or personal injury or death. Troubleshooting must be performed by trained, experienced technicians. Consult a Cummins Authorized Repair Location for diagnosis and repair beyond that which is outlined, and for symptoms not listed in this section. Before beginning any troubleshooting, refer to General Safety Instructions in Section i of this manual.

Follow the suggestions below for troubleshooting:

- Study the complaint thoroughly before acting
- Refer to the engine system diagrams
- Do the easiest and most logical things first
- Find and correct the cause of the complaint

To buy Cummins Parts and Service Manuals, Training Guides, or Tools go to our website at https://store.cummins.com

Troubleshooting Symptoms Overview

General Information

WARNING

Troubleshooting presents the risk of equipment damage, personal injury or death. Troubleshooting must be performed by trained, experienced technicians.

This section utilizes Troubleshooting Symptoms as a guide to locate a problem and direct the end user to the correct procedure for making the repair.

Troubleshooting Symptom Trees are based on the following assumptions.

- The components have been installed according to the manufacturer's specifications.
- The easiest repairs are done first.
- All generic solutions are designed for the most common applications.

Refer to the Original Equipment Manufacturer's service manual for their specifications.

To utilize troubleshooting symptom trees, complete the following steps.

1 In Section TS - Troubleshooting Symptoms, locate the symptom that requires diagnosis.

- Locate the probable cause in the left column then navigate to the procedure referenced in the right column for a corrective action.
  - The left column of boxes in the Troubleshooting Symptom Tree indicates a probable cause of the problem, starting at the top with the simplest and easiest to repair, and continuing downward to the most difficult.
- The right column of boxes provides a brief description of the recommended corrective action for the associated probable cause, and provides a reference to the procedure that hosts those instructions.

3 Continue through the symptom tree until the issue has been resolved.

To buy Cummins Parts and Service Manuals, Training Guides, or Tools go to our website at https://store.cummins.com

Alternator Not Charging or Insufficient Charging

Cause		Correction
STEP 1 Voltmeter is malfunctioning	.....	Inspect the voltmeter. Replace as needed. Refer to the OEM service manual.
OK Go To Next Step		
STEP 2 Engine speed too low for charging	.....	Move throttle to raise engine speed to 1200 rpm to excite the alternator. Refer to Procedure 101-008 (Engine Operating Range) in Section 1.
OK Go To Next Step		
STEP 3 Alternator belt is loose	.....	Check the alternator belt tension. Refer to Procedure 013-005 (Drive Belt, Alternator) in Section 6.
OK Go To Next Step		
STEP 4 Electrical system is "open" (blown fuses, broken wires, or loose connections)	.....	Check the fuses, wires, and connections. Refer to the OEM service manual and the manufacturer's wiring diagrams.
OK Go To Next Step		
STEP 5 Battery cables or connections are loose, broken, or corroded (excessive resistance)	.....	Check the battery cables and connections.
OK Go To Next Step		
STEP 6 Batteries have malfunctioned	.....	Check the condition of the batteries. Replace the batteries, if necessary. Refer to the OEM service manual.
OK Go To Next Step		
STEP 7 Alternator pulley is loose on the shaft	.....	Tighten the pulley. Refer to the alternator manufacturer's and/or OEM instructions.
OK Go To Next Step		
STEP 8 Battery temperature is above specification	.....	Position the batteries away from heat sources. Refer to the OEM service manual.
OK Go To Next Step		
STEP 9 Alternator is overloaded, or alternator capacity is below specification	.....	Install an alternator with a higher capacity. Refer to Procedure 013-001 (Alternator) in Section A and the OEM service manual.
OK Go To Next Step		

To buy Cummins Parts and Service Manuals, Training Guides, or Tools go to our website at https://store.cummins.com

Alternator Not Charging or Insufficient Charging

Cause	Correction
STEP 10 Alternator is malfunctioning	Test the alternator output. Refer to a Cummins® Authorized Repair Location.

OK
Go To Next Step

STEP 11
Contact a Cummins® Authorized Repair Facility

To buy Cummins Parts and Service Manuals, Training Guides, or Tools go to our website at https://store.cummins.com

Alternator Overcharging

Cause	Correction
STEP 1 Electronic fault codes are active	For instructions on how to read active fault codes, refer to Procedure 101-007 (Electronic Controlled Fuel System) in Section 1. If fault codes are active, contact a Cummins Authorized Repair Facility.

OK
Go To Next Step

STEP 2 Voltmeter is malfunctioning	Inspect the voltmeter. Replace as needed. Refer to the OEM service manual.

OK
Go To Next Step

STEP 3 Battery cables or connections are loose, broken, or corroded (excessive resistance)	Check the battery cables and connections.

OK
Go To Next Step

STEP 4 Battery cell is damaged (open circuit)	Check the condition of the batteries. Replace the batteries, if necessary. Refer to the OEM service manual.

OK
Go To Next Step

STEP 5 Voltage regulator is malfunctioning	Check the voltage regulator. Replace the voltage regulator, if necessary. Refer to the OEM service manual.

OK
Go To Next Step

STEP 6 Battery isolator failed (if equipped)	Refer to boat manufacturer's specification and wiring.

OK
Go To Next Step

STEP 7
Contact a Cummins® Authorized Repair Facility

To buy Cummins Parts and Service Manuals, Training Guides, or Tools go to our website at https://store.cummins.com

Coolant Contamination

Cause	Correction
STEP 1 Coolant is rusty and has debris	Drain and flush the cooling system. Fill with correct mixture of antifreeze and water. Refer to Procedure 008-018 (Cooling System) in Section 7. Change the coolant filter (if equipped). Refer to Procedure 008-006 (Coolant Filter) in Section 5.
OK Go To Next Step	
STEP 2 Marine gear oil cooler is malfunctioning	Remove and inspect the marine gear oil cooler. Refer to Procedure 008-041 (Marine Gear Oil Cooler) in Section 6.
OK Go To Next Step	
STEP 3 Lubricating oil cooler is leaking	Check the lubricating oil cooler for coolant leaks and cracks. Refer to a Cummins® Authorized Repair Location.
OK Go To Next Step	
STEP 4 Cylinder head gasket is leaking	Check the cylinder head gasket. Refer to a Cummins® Authorized Repair Facility.
OK Go To Next Step	
STEP 5 Contact a Cummins® Authorized Repair Facility	

To buy Cummins Parts and Service Manuals, Training Guides, or Tools go to our website at https://store.cummins.com

Coolant Loss - External

Cause	Correction
STEP 1 Coolant level is above specification	Check the coolant level. Refer to Procedure 008-066 (Coolant Filter) in Section 3.
OK Go To Next Step	
STEP 2 External coolant leak	Inspect the engine for coolant leaking from hoses, draincocks, the water manifold, jumper tubes, the heat exchanger, expansion and pipe plugs, fittings, the turbocharger, cylinder head gaskets, the lubricating oil cooler, the water pump seal, and OEM-mounted components that have coolant flow. If necessary, pressure-test the cooling system. Refer to a Cummins® Authorized Repair Location.
OK Go To Next Step	
STEP 3 Cooling system pressure cap is **not** correct, is malfunctioning, or has a low-pressure rating	Inspect the pressure cap. Refer to the OEM service manual.
OK Go To Next Step	
STEP 4 Cooling system hose is collapsed, restricted, or leaking	Inspect the hoses. Refer to the OEM service manual.
OK Go To Next Step	
STEP 5 Fill line or vent lines are restricted, obstructed, or **not** routed correctly	Check the vent lines and the fill line for correct routing and for restriction. Refer to the OEM service manual.
OK Go To Next Step	
STEP 6 Incorrect OEM plumbing routing, resulting in loss of coolant through the coolant overflow	Review plumbing to be positive that no high −pressure coolant can cause backflow in the fill line. Refer to the OEM service manual.
OK Go To Next Step	
STEP 7 Engine is overheating	Refer to the Coolant Temperature Above Normal - Gradual Overheat symptom tree or the Coolant Temperature is Above Normal - Sudden Overheat symptom tree.
OK Go To Next Step	
STEP 8 Wet exhaust manifold and turbine housing leaking coolant	Pressure-test the coolant system. Refer to a Cummins® Authorized Repair Location.
OK Go To Next Step	

To buy Cummins Parts and Service Manuals, Training Guides, or Tools go to our website at https://store.cummins.com

Coolant Loss - External

Cause	Correction
STEP 9 Contact a Cummins® Authorized Repair Facility	

To buy Cummins Parts and Service Manuals, Training Guides, or Tools go to our website at https://store.cummins.com

Coolant Loss - Internal

Cause	Correction
STEP 1 Lubricating oil cooler is leaking	Check the lubricating oil cooler for coolant leaks and cracks. Refer to a Cummins® Authorized Repair Location.
OK Go To Next Step	
STEP 2 Internal coolant leaks	Refer to the OEM service manual to pressure test the cooling system and look for internal coolant leaks.
OK Go To Next Step	
STEP 3 Turbocharger leaking coolant	Refer to the OEM service manual to pressure test the cooling system and look for internal leaks.
OK Go To Next Step	
STEP 4 Cylinder head gasket is leaking	Check the cylinder head gasket. Refer to a Cummins® Authorized Repair Location.
OK Go To Next Step	
STEP 5 Cylinder head is cracked or porous	Pressure-test the cylinder head. Refer to a Cummins® Authorized Repair Location.
OK Go To Next Step	
STEP 6 Cylinder block is cracked or porous	Inspect the cylinder block. Refer to a Cummins® Authorized Repair Location.
OK Go To Next Step	
STEP 7 Contact a Cummins® Authorized Repair Facility	

To buy Cummins Parts and Service Manuals, Training Guides, or Tools go to our website at https://store.cummins.com

Coolant Temperature Above Normal - Gradual Overheat

Cause	Correction
STEP 1 Electronic fault codes are active	For instructions on how to read active fault codes, refer to Procedure 101-007 (Electronic Controlled Fuel System) in Section 1. If fault codes are active, contact a Cummins Authorized Repair Facility.
OK Go To Next Step	
STEP 2 Coolant level is below specification	Inspect the engine and cooling system for external coolant leaks. Repair if necessary. Add coolant. Refer to Procedure 008-066 (Coolant Level) in Section 3 and the Coolant Leak External symptom tree.
OK Go To Next Step	
STEP 3 Malfunctioning sea water pump	Check sea water inlet and outlet piping and strainer for restrictions.
OK Go To Next Step	
STEP 4 Coolant mixture of antifreeze and water is **not** correct	Verify the concentration of antifreeze in the coolant. Add antifreeze or water to correct the concentration. Refer to the Cummins Coolant Requirements and Maintenance, Bulletin 3666132.
OK Go To Next Step	
STEP 5 Sea water cooling system is malfunctioning	Troubleshoot the sea water system. Refer to the Coolant Temperature Above Normal - Sea Water Cooling System symptom tree.
OK Go To Next Step	
STEP 6 Water pump belt is broken	Check the water pump belt. Replace the belt if necessary. Refer to Procedure 013-005 (Drive Belt, Alternator) in Section 6.
OK Go To Next Step	
STEP 7 Coolant temperature gauge or sensor is malfunctioning	Test the gauge and the sensor. Repair or replace, if necessary. Refer to the OEM service manual instructions on troubleshooting the gauge. Refer to a Cummins® Authorized Repair Location to monitor and check the coolant temperature sensor.
OK Go To Next Step	
STEP 8 Cooling system pressure cap is **not** correct, is malfunctioning, or has a low-pressure rating	Inspect the pressure cap. Refer to the OEM service manual.
OK Go To Next Step	

To buy Cummins Parts and Service Manuals, Training Guides, or Tools go to our website at https://store.cummins.com

Coolant Temperature Above Normal - Gradual Overheat

Cause		Correction
STEP 9 Thermostat is **not** correct or is malfunctioning	.....	Check the thermostat for the correct part number and for correct operation. Contact a Cummins Authorized Repair Facility.
OK Go To Next Step		
STEP 10 Keel cooler or heat exchanger is malfunctioning or **not** adequately sized	.....	Refer to the OEM service manual instructions on troubleshooting the gauge or contact a Cummins® Authorized Repair Facility.
OK Go To Next Step		
STEP 11 Cooling system hose(s) collapsed, restricted, or leaking	.....	Inspect the cooling system hose(s) for restrictions or obstructions. Refer to the OEM service manual.
OK Go To Next Step		
STEP 12 Fill line or vent lines are restricted, obstructed, or **not** routed correctly	.....	Check the vent lines and the fill line for correct routing and for restriction. Refer to the OEM service manual.
OK Go To Next Step		
STEP 13 Intake manifold air temperature is above specification	.....	Refer to the Intake Manifold Air Temperature Above Specification symptom tree.
OK Go To Next Step		
STEP 14 Lubricating oil level is above or below specification	.....	Check the oil level. Add or drain oil, if necessary. Refer to Procedure 007-043 (Lubricating Oil Level) in Section 3.
OK Go To Next Step		
STEP 15 Cooling system is contaminated with dirt, scale, or sludge	.....	Clean the cooling system. Refer to Procedure 008-018 (Cooling System) in Section 7.
OK Go To Next Step		
STEP 16 Lubricating oil is contaminated with coolant or fuel	.....	Contact a Cummins Authorized Repair Facility.
OK Go To Next Step		
STEP 17 Coolant is contaminated with lubricating oil	.....	Refer to the Lubricating or Transmission Oil in Coolant symptom tree.
OK Go To Next Step		

To buy Cummins Parts and Service Manuals, Training Guides, or Tools go to our website at https://store.cummins.com

Coolant Temperature Above Normal - Gradual Overheat

Cause	Correction
STEP 18 Water pump is malfunctioning	Check the water pump for correct operation. Replace the water pump if necessary.

OK
Go To Next Step

STEP 19 Air or combustion gases are entering the cooling system	Check for air or combustion gases in the cooling system.

OK
Go To Next Step

STEP 20
Contact a Cummins® Authorized Repair Facility

To buy Cummins Parts and Service Manuals, Training Guides, or Tools go to our website at https://store.cummins.com

Coolant Temperature Above Normal - Sudden Overheat

Cause		Correction
STEP 1 Electronic fault codes are active	.....	For instructions on how to read active fault codes, refer to Procedure 101-007 (Electronic Controlled Fuel System) in Section 1. If fault codes are active, contact a Cummins Authorized Repair Facility.
OK Go To Next Step		
STEP 2 Coolant level is below specification	.....	Inspect the engine and cooling system for external coolant leaks. Repair if necessary. Add coolant. Refer to Procedure 008-066 (Coolant Level) in Section 3 and the Coolant Leak External symptom tree.
OK Go To Next Step		
STEP 3 Water pump belt is broken	.....	Check the water pump belt. Replace the belt if necessary. Refer to Procedure 013-005 (Drive Belt, Alternator) in Section 6.
OK Go To Next Step		
STEP 4 Thermostat is **not** correct or is malfunctioning	.....	Check the thermostat for the correct part number and for correct operation. Contact a Cummins Authorized Repair Facility.
OK Go To Next Step		
STEP 5 Coolant temperature gauge or sensor is malfunctioning	.....	Test the gauge and the sensor. Repair or replace, if necessary. Refer to the OEM service manual instructions on troubleshooting the gauge. Refer to a Cummins® Authorized Repair Location to monitor and check the coolant temperature sensor.
OK Go To Next Step		
STEP 6 Sea water cooling system is malfunctioning	.....	Troubleshoot the sea water system. Refer to the Coolant Temperature Above Normal - Sea water Cooling System symptom tree.
OK Go To Next Step		
STEP 7 Cooling system hose(s) collapsed, restricted, or leaking	.....	Inspect the cooling system hose(s) for restrictions or obstructions. Refer to the OEM service manual.
OK Go To Next Step		
STEP 8 Fill line or vent lines are restricted, obstructed, or **not** routed correctly	.....	Check the vent lines and the fill line for correct routing and for restriction. Refer to the OEM service manual.
OK Go To Next Step		

To buy Cummins Parts and Service Manuals, Training Guides, or Tools go to our website at https://store.cummins.com

Coolant Temperature Above Normal - Sudden Overheat

Cause	Correction
STEP 9 Water pump is malfunctioning	Check the water pump for correct operation. Replace the water pump if necessary.

OK
Go To Next Step

STEP 10 Cooling system pressure cap is **not** correct, is malfunctioning, or has a low-pressure rating	Inspect the pressure cap. Refer to the OEM service manual.

OK
Go To Next Step

STEP 11 Marine gear oil cooler is malfunctioning	Remove and inspect the marine gear oil cooler. Refer to Procedure 008-041 (Marine Gear Oil Cooler) in Section 6.

OK
Go To Next Step

STEP 12
Contact a Cummins® Authorized Repair Facility

To buy Cummins Parts and Service Manuals, Training Guides, or Tools go to our website at https://store.cummins.com

Coolant Temperature Below Normal

Cause	Correction
STEP 1 Electronic fault codes are active	For instructions on how to read active fault codes, refer to Procedure 101-007 (Electronic Controlled Fuel System) in Section 1. If fault codes are active, contact a Cummins Authorized Repair Facility.
OK Go To Next Step	
STEP 2 Coolant temperature gauge or sensor is malfunctioning	Test the gauge and the sensor. Repair or replace, if necessary. Refer to the OEM service manual instructions on troubleshooting the gauge. Refer to a Cummins® Authorized Repair Location to monitor and check the coolant temperature sensor.
OK Go To Next Step	
STEP 3 Excessive coolant flow through OEM plumbing and heater cores	Close valves to heater cores. Run engine. If engine operates at normal temperature, refer to the OEM service manual.
OK Go To Next Step	
STEP 4 Thermostat is **not** correct or is malfunctioning	Check the thermostat for the correct part number and for correct operation. Contact a Cummins Authorized Repair Facility.
OK Go To Next Step	
STEP 5 Engine idle time is excessive	Low oil and coolant temperatures can be caused by long idle time (greater than 10 minutes). Shut off the engine rather than idle for long periods. If idle time is necessary, raise the idle speed. Refer to Procedure 101-008 (Engine Operating Range) in Section 1.
OK Go To Next Step	
STEP 6 Cooling system component is malfunctioning	Perform the cooling system diagnostics test. Refer to a Cummins® Authorized Repair Location.
OK Go To Next Step	
STEP 7 Contact a Cummins® Authorized Repair Facility	

To buy Cummins Parts and Service Manuals, Training Guides, or Tools go to our website at https://store.cummins.com

Coolant in the Lubricating Oil

Cause	Correction
STEP 1 Lubricating oil cooler is malfunctioning	Check the oil cooler. Refer to a Cummins® Authorized Repair Location.
OK Go To Next Step	
STEP 2 Internal coolant leaks	Refer to a Cummins® Authorized Repair Location to pressure test the cooling system and look for internal coolant leaks.
OK Go To Next Step	
STEP 3 Turbocharger leaking coolant	Refer to a Cummins® Authorized Repair Location.
OK Go To Next Step	
STEP 4 Cylinder head gasket is leaking	Check the cylinder head gasket. Refer to a Cummins® Authorized Repair Location.
OK Go To Next Step	
STEP 5 Cylinder head is cracked or porous	Pressure-test the cylinder head. Refer to a Cummins® Authorized Repair Location.
OK Go To Next Step	
STEP 6 Cylinder block is cracked or porous	Inspect the cylinder block. Refer to a Cummins® Authorized Repair Location.
OK Go To Next Step	
STEP 7 Contact a Cummins® Authorized Repair Facility	

To buy Cummins Parts and Service Manuals, Training Guides, or Tools go to our website at https://store.cummins.com

Coolant Temperature Above Normal - Sea Water Cooling System

Cause	Correction
STEP 1 Sea water inlet valve is **not** open or is partially open	Check sea water inlet valve. Refer to Procedure 008-057 (Sea water Pump) in Section 5.
OK Go To Next Step	
STEP 2 Sea water strainer clogged	Clean sea water strainer. Refer to Procedure 008-067 (Sea water Strainer) in Section 3.
OK Go To Next Step	
STEP 3 Sea water hose(s) collapsed	Check sea water system hose(s). Refer to Procedure 008-104 (Sea water Hoses) in Section 4.
OK Go To Next Step	
STEP 4 Sea water pump outlet pressure is excessive	Determine cause of sea water system blockage. Refer to Procedure 008-057 (Sea water Pump) in Section 5.
OK Go To Next Step	
STEP 5 Sea water pump is **not** pumping water	Inspect the sea water pump impeller. Refer to Procedure 008-057 (Sea water Pump) in Section 5.
OK Go To Next Step	
STEP 6 Air in the cooling system	Inspect and vent the cooling system. Refer to Procedure 008-018 (Cooling System) in Section 7 for correct venting procedure while filling the cooling system.
OK Go To Next Step	
STEP 7 Aftercooler element is restricted	Inspect the aftercooler element for restriction. Clean or replace the core if necessary. Refer to Procedure 010-005 (Aftercooler Assembly) in Section 6.
OK Go To Next Step	
STEP 8 Keel cooler or heat exchanger is malfunctioning or **not** adequately sized	Refer to Procedure 008-053 (Heat Exchanger) in Section 6 to check the heat exchanger. Refer to a Cummins® Authorized Repair Location and OEM troubleshooting and repair manual to check the keel cooler.
OK Go To Next Step	
STEP 9 Contact a Cummins® Authorized Repair Facility	

To buy Cummins Parts and Service Manuals, Training Guides, or Tools go to our website at https://store.cummins.com

Engine Acceleration or Response Poor

Cause	Correction
STEP 1 Electronic fault codes are active	For instructions on how to read active fault codes, refer to Procedure 101-007 (Electronic Controlled Fuel System) in Section 1. If fault codes are active, contact a Cummins Authorized Repair Facility.
OK Go To Next Step	
STEP 2 Operator technique is **not** correct	Refer to Procedure 101-015 (Operating Instructions) in Section 1.
OK Go To Next Step	
STEP 3 Fuel level is low in the tank	Fill the supply tank. Refer to the OEM service manual.
OK Go To Next Step	
STEP 4 Fuel leak	Check the fuel lines, fuel connections, and fuel filters for leaks. Check the fuel lines to the supply tanks. Refer to the OEM service manual.
OK Go To Next Step	
STEP 5 Fuel filter or fuel inlet restriction	Check the flow through the fuel filter. Replace the fuel filter if necessary. Refer to Procedure 006-015 (Fuel Filter (Spin-On Type)) in Section 5.. Clean all prefilters and screens. Check the fuel suction line for restriction.
OK Go To Next Step	
STEP 6 Fuel drain line restriction	Check or replace the fuel lines, check valves, or tank vents as needed. Refer to the OEM service manual.
OK Go To Next Step	
STEP 7 Air intake system restriction is above specification	Check the air intake system for restriction. Clean or replace the air filter and inlet piping as necessary. Refer to Procedure 010-013 (Air Cleaner Assembly (Engine Mounted)) in Section 4.
OK Go To Next Step	
STEP 8 Fuel grade is **not** correct for the application or the fuel quality is poor	Operate the engine from a tank of high-quality fuel. Refer to Fuel for Cummins Engines, Bulletin 3379001.
OK Go To Next Step	

To buy Cummins Parts and Service Manuals, Training Guides, or Tools go to our website at https://store.cummins.com

Engine Acceleration or Response Poor

Cause		Correction
STEP 9 Fuel inlet temperature to pump is above specification	.....	Inspect the fuel cooler. Refer to a Cummins® Authorized Repair Location.
OK Go To Next Step		
STEP 10 Vessel is malfunctioning or parasitics are excessive	.....	Check the vessel's bottom, propeller, transmission, and driven accessories. Refer to the OEM service manual.
OK Go To Next Step		
STEP 11 Propeller damaged or **not** at the correct pitch	.....	Inspect or replace propeller. Refer to the manufacturer's instructions.
OK Go To Next Step		
STEP 12 Fuel lift pump is malfunctioning	.....	Check the fuel lift pump for correct operation. Check the pump output pressure. Replace the lift pump, if necessary. Refer to a Cummins® Authorized Repair Location.
OK Go To Next Step		
STEP 13 Air in the fuel system	.....	Check for air in the fuel system. Tighten or replace the fuel connections, fuel lines, fuel tank standpipe, and fuel filters as necessary.
OK Go To Next Step		
STEP 14 Contact a Cummins® Authorized Repair Facility		

To buy Cummins Parts and Service Manuals, Training Guides, or Tools go to our website at https://store.cummins.com

Engine Difficult to Start or Will Not Start (Exhaust Smoke)

Cause	Correction
STEP 1 Electronic fault codes are active	For instructions on how to read active fault codes, refer to Procedure 101-007 (Electronic Controlled Fuel System) in Section 1. If fault codes are active, contact a Cummins Authorized Repair Facility.
OK Go To Next Step	
STEP 2 Fuel supply and/or return valves closed or **only** partially open	Verify the fuel supply and return valves are fully open.
OK Go To Next Step	
STEP 3 Fuel level is low in the tank	Fill the supply tank. Refer to the OEM service manual.
OK Go To Next Step	
STEP 4 Battery voltage is low	Check the batteries and the unswitched battery supply circuit. Refer to the OEM service manual.
OK Go To Next Step	
STEP 5 Engine cranking speed is too slow	If the cranking speed is slower than 150 rpm, refer to to the Engine Will Not Crank or Cranks Slowly (Electric Starter) symptom tree.
OK Go To Next Step	
STEP 6 Starting aid is necessary for cold weather or starting aid is malfunctioning	Check for the correct operation of the starting aid. Refer to the manufacturer's instructions. Refer to to the Engine Will Not Crank or Cranks Slowly (Electric Starter) symptom tree Section 1.
OK Go To Next Step	
STEP 7 Engine block heater is malfunctioning (if equipped)	Check the electrical sources and wiring to the cylinder block heater. Replace the block heater, if necessary. Refer to a Cummins® Authorized Repair Location.
OK Go To Next Step	
STEP 8 Fuel leak	Check the fuel lines, fuel connections, and fuel filters for leaks. Check the fuel lines to the supply tanks. Refer to the OEM service manual.
OK Go To Next Step	

To buy Cummins Parts and Service Manuals, Training Guides, or Tools go to our website at https://store.cummins.com

Engine Difficult to Start or Will Not Start (Exhaust Smoke)

Cause		Correction
STEP 9 Air in the fuel system	.....	Check for air in the fuel system. Tighten or replace the fuel connections, fuel lines, fuel tank standpipe, and fuel filters as necessary.

OK
Go To Next Step

STEP 10 Fuel grade is **not** correct for the application or the fuel quality is poor	.....	Operate the engine from a tank of high-quality fuel. Refer to Fuel for Cummins Engines, Bulletin 3379001.

OK
Go To Next Step

STEP 11 Air intake system restriction is above specification	.....	Check the air intake system for restriction. Clean or replace the air filter and inlet piping as necessary. Refer to Procedure 010-013 (Air Cleaner Assembly (Engine Mounted)) in Section A.

OK
Go To Next Step

STEP 12 Fuel lift pump is malfunctioning	.....	Check the fuel lift pump for correct operation. Check the pump output pressure. Replace the lift pump, if necessary. Refer to a Cummins® Authorized Repair Location.

OK
Go To Next Step

STEP 13 Low pressure fuel lines connected to the ECM cooling plate installed backwards	.....	Make sure the top connection to the ECM cooling plate is the inlet and the bottom connection is the outlet.

OK
Go To Next Step

STEP 14 Fuel cooler damaged or collapsed	.....	Remove and inspect the fuel cooler for internal damage or collapsed. Refer to a Cummins® Authorized Repair Location.

OK
Go To Next Step

STEP 15
Contact a Cummins® Authorized Repair Facility

To buy Cummins Parts and Service Manuals, Training Guides, or Tools go to our website at https://store.cummins.com

Engine Difficult to Start or Will Not Start (No Exhaust Smoke)

Cause	Correction
STEP 1 Electronic fault codes are active	For instructions on how to read active fault codes, refer to Procedure 101-007 (Electronic Controlled Fuel System) in Section 1. If fault codes are active, contact a Cummins Authorized Repair Facility.
OK Go To Next Step	
STEP 2 Fuel shutoff lever (mechanical) partially engaged	Check or replace shutoff lever in run position.
OK Go To Next Step	
STEP 3 Fuel supply and/or return valves closed or **only** partially open	Verify the fuel supply and return valves are fully open.
OK Go To Next Step	
STEP 4 Fuel level is low in the tank	Fill the supply tank. Refer to the OEM service manual.
OK Go To Next Step	
STEP 5 Battery voltage is low	Check the batteries and the unswitched battery supply circuit. Refer to Procedure 013-007 (Batteries) in Section 6.
OK Go To Next Step	
STEP 6 Battery voltage supply to the electronic control module (ECM) is low, interrupted, or open	Check the battery connections, the fuses, and the unswitched battery supply circuit. Refer to Procedure 013-009 (Battery Cables and Connections) and Procedure 019-043 (Engine Wiring Harness) in Section 4.
OK Go To Next Step	
STEP 7 Moisture in the wiring harness connectors	Dry the connectors with Cummins electronic cleaner, Part Number 3824510.
OK Go To Next Step	
STEP 8 Air in the fuel system	Check for air in the fuel system. Tighten or replace the fuel connections, fuel lines, fuel tank standpipe, and fuel filters as necessary.
OK Go To Next Step	
STEP 9 OEM engine protection system is active or is malfunctioning	Isolate the OEM engine protection system. Follow the OEM service manuals to check for a malfunction.
OK Go To Next Step	

To buy Cummins Parts and Service Manuals, Training Guides, or Tools go to our website at https://store.cummins.com

Engine Difficult to Start or Will Not Start (No Exhaust Smoke)

Cause	Correction
STEP 10 Fuel filter or fuel inlet restriction	Check the flow through the fuel filter. Replace the fuel filter if necessary. Refer to Procedure 006-015 (Fuel Filter (Spin-On Type)) in Section 5.. Clean all prefilters and screens. Check the fuel suction line for restriction.

OK
Go To Next Step

STEP 11 Fuel lift pump is malfunctioning	Check the fuel lift pump for correct operation. Check the pump output pressure. Replace the lift pump, if necessary. Refer to a Cummins® Authorized Repair Location.

OK
Go To Next Step

STEP 12 Low pressure fuel lines connected to the ECM cooling plate installed backwards	Make sure the top connection to the ECM cooling plate is the inlet and the bottom connection is the outlet.

OK
Go To Next Step

STEP 13 Fuel cooler damaged or collapsed	Remove and inspect the fuel cooler for internal damage or collapsed. Refer to a Cummins® Authorized Repair Location.

OK
Go To Next Step

STEP 14
Contact a Cummins® Authorized Repair Facility

To buy Cummins Parts and Service Manuals, Training Guides, or Tools go to our website at https://store.cummins.com

Engine Noise Excessive

Cause	Correction
STEP 1 Drive belt is loose, tight, or **not** in alignment	Check and adjust the drive belt as needed. Refer to a Cummins® Authorized Repair Location.
OK Go To Next Step	
STEP 2 Alternator pulley is loose on the shaft	Tighten the pulley. Refer to the manufacturer's service manual.
OK Go To Next Step	
STEP 3 Air intake or exhaust leaks	Check for loose or damaged piping connections and missing pipe plugs. Check the turbocharger and exhaust manifold mounting. Refer to a Cummins® Authorized Repair Location.
OK Go To Next Step	
STEP 4 Lubricating oil level is below specification	Check the oil level. Verify the dipstick calibration and the oil pan capacity. Fill the system to the specified level. Refer to Procedure 007-043 (Lubricating Oil Level) in Section 3.
OK Go To Next Step	
STEP 5 Lubricating oil is thin or diluted	Refer to Procedure 018-003 (Lubricating Oil Recommendations and Specifications) in Section V and the Lubricating Oil Contaminated symptom tree. If the oil pressure is low, refer to the Lubricating Oil Pressure Low troubleshooting symptom tree in Section TS.
OK Go To Next Step	
STEP 6 Lubricating oil pressure is below specification	Check the oil pressure. If the pressure is low, a Cummins® Authorized Repair Location. Contact a Cummins® Authorized Repair Location.
OK Go To Next Step	
STEP 7 Vibration damper is damaged or loose	Inspect the vibration damper. Contact a Cummins® Authorized Repair Location.
OK Go To Next Step	
STEP 8 Engine mounts are worn, damaged, or **not** correct	Check the engine mounts. Refer to Procedure 016-026 (Engine Mounting Vibration Isolators) and Procedure 000-008 (Engine Mounting Bolts) in Section 6.
OK Go To Next Step	

To buy Cummins Parts and Service Manuals, Training Guides, or Tools go to our website at https://store.cummins.com

Engine Noise Excessive

Cause	Correction
STEP 9 Overhead adjustments are **not** correct	Measure and adjust the overhead settings. Refer to Procedure 003-004 (Overhead Set) in Section 8.
OK Go To Next Step	
STEP 10 Overhead components are damaged	Inspect the rocker levers, rocker shafts, and valves for damage or excessive wear. Refer to a Cummins® Authorized Repair Location.
OK Go To Next Step	
STEP 11 Injector(s) are malfunctioning	Perform diagnostics to find the damaged injector(s). Replace the injector(s) as necessary.
OK Go To Next Step	
STEP 12 Coolant temperature is above specification	Refer to the Coolant Temperature Above Normal - Gradual Overheat and Coolant Temperature Above Normal - Sudden Overheat symptom trees.
OK Go To Next Step	
STEP 13 Flywheel or flexplate capscrews are loose or broken	Check the flywheel or flexplate and the mounting capscrews. Refer to the OEM service manual.
OK Go To Next Step	
STEP 14 Turbocharger noise	Refer to the Engine Noise Excessive - Turbocharger symptom tree.
OK Go To Next Step	
STEP 15 Drivetrain noise is excessive	Disconnect the drivetrain. Check for engine noise. Refer to the OEM service manual.
OK Go To Next Step	
STEP 16 Contact a Cummins® Authorized Repair Facility	

To buy Cummins Parts and Service Manuals, Training Guides, or Tools go to our website at https://store.cummins.com

Engine Noise Excessive — Combustion Knocks

Cause	Correction
STEP 1 Electronic fault codes are active	For instructions on how to read active fault codes, refer to Procedure 101-007 (Electronic Controlled Fuel System) in Section 1. If fault codes are active, contact a Cummins Authorized Repair Facility.
OK Go To Next Step	
STEP 2 Fuel grade is **not** correct for the application or the fuel quality is poor	Operate the engine from a tank of high-quality fuel. Refer to Fuels for Cummins Engines, Bulletin 3379001.
OK Go To Next Step	
STEP 3 Air in the fuel system	Check for air in the fuel system. Tighten or replace the fuel connections, fuel lines, fuel tank standpipe, and fuel filters as necessary.
OK Go To Next Step	
STEP 4 Coolant temperature is below specification	Refer to the Coolant Temperature is Below Normal symptom tree.
OK Go To Next Step	
STEP 5 Overhead adjustments are **not** correct	Measure and adjust the overhead settings. Refer to Procedure 003-004 (Overhead Set) in Section 8.
OK Go To Next Step	
STEP 6 Injector is malfunctioning	Replace the malfunctioning injector. Contact a Cummins Authorized Repair Facility.
OK Go To Next Step	
STEP 7 Contact a Cummins® Authorized Repair Facility	

To buy Cummins Parts and Service Manuals, Training Guides, or Tools go to our website at https://store.cummins.com

Engine Noise Excessive - Turbocharger

Refer to Engine Noise Diagnostic Procedures - General Information, in the troubleshooting overview procedure at the beginning of Section TS, before using this symptom tree.

Cause	Correction
STEP 1 Electronic fault codes active or high count of inactive fault codes	View and troubleshoot the fault codes with INSITE™ electronic service tool. Refer to the QSC8.3 CM850 Fault Code Troubleshooting Manual, Bulletin 4021416.
OK Go To Next Step	
STEP 2 Turbocharger(s) is **not** correct	Check the turbocharger part number and compare it to the Control Parts List (CPL), Bulletin 4021328. Replace the turbocharger, if necessary. Refer to the equipment manufacturer service information.
OK Go To Next Step	
STEP 3 Air intake system restriction is above specification	Check the air intake system for restrictions. Clean or replace the air filter and inlet piping as necessary. Refer to the equipment manufacturer service information.
OK Go To Next Step	
STEP 4 Air intake or exhaust leaks	Inspect the air intake and exhaust systems for air leaks. Refer to the equipment manufacturer service information. On engines equipped with exhaust gas recirculator (EGR), make sure to inspect the EGR tube connections for leaks. Reference the equipment manufacturer service information.
OK Go To Next Step	
STEP 5 Air intake or exhaust piping is contacting the chassis or cab	Inspect the air piping, chassis, and cab for contact points. Refer to the equipment manufacturer service information.
OK Go To Next Step	
STEP 6 Exhaust system restriction is **not** within specification	Check the exhaust system for restrictions. Contact a Cummins® Authorized Repair Location.
OK Go To Next Step	
STEP 7 Lubricating oil is thin or diluted	Check the viscosity of the oil sample. Refer to the equipment manufacturer service information to determine if the lubricating oil is contaminated. If the lubricating oil is contaminated, see the Lubricating Oil Contaminated troubleshooting symptom tree in Section TS.
OK Go To Next Step	

To buy Cummins Parts and Service Manuals, Training Guides, or Tools go to our website at https://store.cummins.com

Engine Noise Excessive - Turbocharger

Refer to Engine Noise Diagnostic Procedures - General Information, in the troubleshooting overview procedure at the beginning of Section TS, before using this symptom tree.

Cause	Correction
STEP 8 Lubricating oil pressure is below specification	Check the oil pressure. Refer to the equipment manufacturer service information. If the pressure is low, refer to the Lubricating Oil Pressure Low troubleshooting symptom tree in Section TS.

OK
Go To Next Step

STEP 9 Turbocharger is worn or damaged	Check the turbocharger for damage. Measure the turbine and compressor wheel clearances. Refer to the equipment manufacturer service information.

OK
Go To Next Step

STEP 10
Contact a Cummins® Authorized Repair Facility

To buy Cummins Parts and Service Manuals, Training Guides, or Tools go to our website at https://store.cummins.com

Engine Power Output Low

Cause		Correction
STEP 1 Electronic fault codes are active or high counts of inactive fault codes	.....	Review instructions for reading active fault codes.
OK Go To Next Step		
STEP 2 Excessive load for engine horsepower rating	.....	Reduce vehicle load or use low gear if the engine is industrial. If engine is marine, change propeller(s).
OK Go To Next Step		
STEP 3 Operator technique is **not** correct	.....	Explain correct engine operation to the operator. Refer to Procedure Procedure 101-008 (Engine Operating Range) in Section 1.
OK Go To Next Step		
STEP 4 Tachometer is **not** calibrated or is malfunctioning	.....	Compare the tachometer reading with a handheld tachometer or an electronic service tool reading. Calibrate or replace the tachometer as necessary. Refer to the OEM service manual.
OK Go To Next Step		
STEP 5 Fuel level is low in the tank	.....	Fill the supply tank. Refer to the OEM service manual.
OK Go To Next Step		
STEP 6 Fuel filter or fuel inlet restriction	.....	Check the flow through the fuel filter. Replace the fuel filter, if necessary. Refer to Procedure Procedure 006-015 (Fuel Filter (Spin-On Type)) in Section 5. Clean all prefilters and screens. Check the fuel suction line for restriction.
OK Go To Next Step		
STEP 7 Fuel drain line restriction	.....	Check or replace the fuel lines, check valves, or tank vents as needed. Refer to the OEM service manual.
OK Go To Next Step		
STEP 8 Fuel leak	.....	Check the fuel lines, fuel connections, and fuel filters for leaks. Check the fuel lines to the supply tanks. Refer to a Cummins® Authorized Repair Location.
OK Go To Next Step		

To buy Cummins Parts and Service Manuals, Training Guides, or Tools go to our website at https://store.cummins.com

Engine Power Output Low

Cause	Correction
STEP 9 Fuel pressure sensor(s) malfunctioning	Check the voltage of the fuel pressure sensor(s). If voltage is outside the range on the wiring diagram, replace the sensor(s). Refer to a Cummins® Authorized Repair Location.
OK Go To Next Step	
STEP 10 Air intake system restriction is above specification	Replace the air filter and inlet piping as necessary. Refer to Procedure Procedure 010-013 (Air Cleaner Assembly (Engine Mounted)) in Section 6.
OK Go To Next Step	
STEP 11 Air intake or exhaust leaks	Check for loose or damaged piping connections and missing pipe plugs. Check the turbocharger and exhaust manifold mounting. Refer to a Cummins® Authorized Repair Location.
OK Go To Next Step	
STEP 12 Ambient air pressure sensor is malfunctioning	Check the ambient air pressure sensor. Refer to a Cummins® Authorized Repair Location.
OK Go To Next Step	
STEP 13 Air in the fuel system	Check for air in the fuel system. Tighten or replace the fuel connections, fuel lines, fuel tank standpipe, and fuel filters as necessary.
OK Go To Next Step	
STEP 14 Fuel tank vents are plugged or damaged	Remove and clean the tank vents. Replace the vents, if necessary. Refer to the OEM service manual.
OK Go To Next Step	
STEP 15 Lubricating oil level is above specification	Check the oil level. Verify the dipstick calibration and oil pan capacity. Fill the system to the specified level. Contact a Cummins® Authorized Repair Location.
OK Go To Next Step	
STEP 16 Fuel inlet temperature to pump is above specification	Inspect the fuel cooler. Refer to a Cummins® Authorized Repair Location.
OK Go To Next Step	

To buy Cummins Parts and Service Manuals, Training Guides, or Tools go to our website at https://store.cummins.com

Engine Power Output Low

Cause		Correction
STEP 17 Aftercooler restricted, if equipped	.....	Inspect for plugged passages in the aftercooler. Refer to Procedure Procedure 010-005 (Aftercooler Assembly (Sea water)) in Section 6.

OK
Go To Next Step

STEP 18 Exhaust system restriction	.....	Check the exhaust system for restrictions.

OK
Go To Next Step

STEP 19 Injector(s) are malfunctioning	.....	Perform diagnostics to find the damaged injector(s). Replace the injector(s) as necessary.

OK
Go To Next Step

STEP 20
Contact a Cummins® Authorized Repair Facility

To buy Cummins Parts and Service Manuals, Training Guides, or Tools go to our website at https://store.cummins.com

Engine Runs Rough at Idle

Cause	Correction
STEP 1 Electronic fault codes are active	For instructions on how to read active fault codes, refer to Procedure 101-007 (Electronic Controlled Fuel System) in Section 1. If fault codes are active, contact a Cummins Authorized Repair Facility.
OK Go To Next Step	
STEP 2 Engine is cold	Allow the engine to warm to operating temperature. If the engine will **not** reach operating temperature, refer to the Coolant Temperature Below Normal symptom tree.
OK Go To Next Step	
STEP 3 Air in the fuel system	Check for air in the fuel system. Tighten or replace the fuel connections, fuel lines, fuel tank standpipe, and fuel filters as necessary.
OK Go To Next Step	
STEP 4 Engine mounts are worn, damaged, or **not** correct	Check the engine mounts. Refer to Procedure 016-026 (Engine Mounting Isolators) in Section 6.
OK Go To Next Step	
STEP 5 Propeller shaft bent or mis-aligned	Check the propeller shaft alignment. Refer to Procedure 016-025 (Propeller Shaft) in Section A.
OK Go To Next Step	
STEP 6 Wiring harness connections have moisture, bent or broken pins, or corrosion	Dry or repair connectors as necessary. Refer to Procedure 019-043 (Engine Wiring Harness) in Section 4.
OK Go To Next Step	
STEP 7 Fuel grade is **not** correct for the application or the fuel quality is poor	Operate the engine from a tank of high-quality fuel. Refer to Procedure 018-002 (Fuel Recommendations And Specifications) in Section V.
OK Go To Next Step	
STEP 8 Overhead adjustments are **not** correct	Measure and adjust the overhead settings. Refer to Procedure 003-004 (Overhead Set) in Section 8.
OK Go To Next Step	
STEP 9 Injector is malfunctioning	Perform the single-cylinder cutout test. Replace the injectors as necessary. Refer to a Cummins® Authorized Repair Location.
OK Go To Next Step	

To buy Cummins Parts and Service Manuals, Training Guides, or Tools go to our website at https://store.cummins.com

Engine Runs Rough at Idle

Cause	Correction
STEP 10 Contact a Cummins® Authorized Repair Facility	

To buy Cummins Parts and Service Manuals, Training Guides, or Tools go to our website at https://store.cummins.com

Engine Runs Rough or Misfires

Cause	Correction
STEP 1 Electronic fault codes are active	For instructions on how to read active fault codes, refer to Procedure 101-007 (Electronic Controlled Fuel System) in Section 1. If fault codes are active, contact a Cummins Authorized Repair Facility.
OK Go To Next Step	
STEP 2 Engine is cold	Allow the engine to warm to operating temperature. If the engine will **not** reach operating temperature, refer to the Coolant Temperature is Below Normal symptom tree.
OK Go To Next Step	
STEP 3 Propeller shaft bent or mis-aligned	Check the propeller shaft alignment. Refer to Procedure 016-025 (Propeller Shaft) in Section A.
OK Go To Next Step	
STEP 4 Air in the fuel system	Check for air in the fuel system. Tighten or replace the fuel connections, fuel lines, fuel tank standpipe, and fuel filters as necessary.
OK Go To Next Step	
STEP 5 Engine mounts are worn, damaged, or **not** correct	Check the engine mounts. Refer to Procedure 016-026 (Engine Mounting Isolators) in Section 6.
OK Go To Next Step	
STEP 6 Wiring harness connections have moisture, bent or broken pins, or corrosion	Dry or repair connectors as necessary. Refer to Procedure 019-043 (Engine Wiring Harness) in Section 4.
OK Go To Next Step	
STEP 7 Fuel grade is **not** correct for the application or the fuel quality is poor	Operate the engine from a tank of high-quality fuel. Refer to Procedure 018-002 (Fuels Recommendations and Specifications) in Section V.
OK Go To Next Step	
STEP 8 Fuel filter or fuel inlet restriction	Check the flow through the fuel filter. Replace the fuel filter if necessary. Refer to Procedure 006-015 (Fuel Filter - (Spin-On Type)) in Section 5 and/or Procedure 006-043 (Fuel-Water Separator) in Section 5. Clean all prefilters and screens. Check the fuel suction line for restriction.
OK Go To Next Step	

To buy Cummins Parts and Service Manuals, Training Guides, or Tools go to our website at https://store.cummins.com

Engine Runs Rough or Misfires

Cause	Correction
STEP 9 Overhead adjustments are **not** correct	Measure and adjust the overhead settings. Refer to Procedure 003-004 (Overhead Set) in Section 8.
OK Go To Next Step	
STEP 10 Injector is malfunctioning	Perform the single-cylinder cutout test. Replace the injectors as necessary. Refer to a Cummins® Authorized Repair Location.
OK Go To Next Step	
STEP 11 Contact a Cummins® Authorized Repair Facility	

To buy Cummins Parts and Service Manuals, Training Guides, or Tools go to our website at https://store.cummins.com

Engine Shuts Off Unexpectedly or Dies During Deceleration

Cause	Correction
STEP 1 Electronic fault codes are active	For instructions on how to read active fault codes, refer to Procedure 101-007 (Electronic Controlled Fuel System) in Section 1. If fault codes are active, contact a Cummins Authorized Repair Facility.
OK Go To Next Step	
STEP 2 Engine will **not** restart	Refer to the Engine Difficult to Start or Will Not Start symptom tree.
OK Go To Next Step	
STEP 3 Fuel level is low in the tank	Fill the supply tank. Refer to the OEM service manual.
OK Go To Next Step	
STEP 4 Electrical system is "open" (blown fuses, broken wires, or loose connections)	Check the fuses, wires, and connections. Refer to Procedure 013-009 (Battery Cables and Connections) or Procedure 019-043 (Engine Wiring Harness) in Section 4 and/or a Cummins® Authorized Repair Location.
OK Go To Next Step	
STEP 5 OEM engine protection system is active or is malfunctioning	Isolate the OEM engine protection system. Follow the OEM service manuals to check for a malfunction.
OK Go To Next Step	
STEP 6 Battery voltage supply to the electronic control module (ECM) is low, interrupted, or open	Check the battery connections, the fuses, and the unswitched battery supply circuit. Refer to a Cummins® Authorized Repair Location.
OK Go To Next Step	
STEP 7 Wiring harness connections have moisture, bent or broken pins, or corrosion	Dry or repair connectors as necessary. Refer to Procedure 019-043 (Engine Wiring Harness) in Section 4.
OK Go To Next Step	
STEP 8 Air in the fuel system	Check for air in the fuel system. Tighten or replace the fuel connections, fuel lines, fuel tank standpipe, and fuel filters as necessary.
OK Go To Next Step	

To buy Cummins Parts and Service Manuals, Training Guides, or Tools go to our website at https://store.cummins.com

Engine Shuts Off Unexpectedly or Dies During Deceleration

Cause	Correction
STEP 9 Fuel pressure sensor(s) malfunctioning	Check the voltage of the fuel pressure sensor(s). If voltage is outside the range on the wiring diagram, replace the sensor(s). Refer to a Cummins® Authorized Repair Location.

OK
Go To Next Step

STEP 10
Contact a Cummins® Authorized Repair Facility

To buy Cummins Parts and Service Manuals, Training Guides, or Tools go to our website at https://store.cummins.com

Engine Speed Surges at Low or High Idle

Cause	Correction
STEP 1 Electronic fault codes are active	For instructions on how to read active fault codes, refer to Procedure 101-007 (Electronic Controlled Fuel System) in Section 1. If fault codes are active, contact a Cummins Authorized Repair Facility.
OK Go To Next Step	
STEP 2 Fuel level is low in the tank	Fill the supply tank. Refer to the OEM service manual.
OK Go To Next Step	
STEP 3 Excessive water in the fuel filter	Drain the fuel water separator and replace the fuel filter. Refer to Procedure 006-043 (Fuel-Water Separator) and Procedure 006-015 (Fuel Filter (Spin-On Type)) in Section 5.
OK Go To Next Step	
STEP 4 Air in the fuel system	Check for air in the fuel system. Tighten or replace the fuel connections, fuel lines, fuel tank standpipe, and fuel filters as necessary.
OK Go To Next Step	
STEP 5 Fuel grade is **not** correct for the application or the fuel quality is poor	Operate the engine from a tank of high-quality fuel. Refer to Procedure 018-002 (Fuel Recommendations and Specifications) in Section V.
OK Go To Next Step	
STEP 6 Accelerator pedal or lever is restricted or malfunctioning	Check the percent throttle reading on an electronic service tool. Verify that it reads 100 percent with the accelerator pedal depressed and 0 percent when released. Calibrate the accelerator if possible. Replace the accelerator if necessary Procedure 018-002 (Fuel Recommendations and Specifications) in Section V.
OK Go To Next Step	
STEP 7 Moisture in the wiring harness connectors	Dry the connectors with Cummins electronic cleaner, Part Number 3824510.
OK Go To Next Step	
STEP 8 Contact a Cummins® Authorized Repair Facility	

To buy Cummins Parts and Service Manuals, Training Guides, or Tools go to our website at https://store.cummins.com

Engine Speed Surges Under Load or in Operating Range

Cause	Correction
STEP 1 Electronic fault codes are active	For instructions on how to read active fault codes, refer to Procedure 101-007 (Electronic Controlled Fuel System) in Section 1. If fault codes are active, contact a Cummins Authorized Repair Facility.
OK Go To Next Step	
STEP 2 Fuel level is low in the tank	Fill the supply tank. Refer to the OEM service manual.
OK Go To Next Step	
STEP 3 Excessive water in the fuel filter	Drain the fuel water separator and replace the fuel filter. Refer to Procedure 006-043 (Fuel-Water Separator) and Procedure 006-015 (Fuel Filter (Spin-On Type)) in Section 5.
OK Go To Next Step	
STEP 4 Air in the fuel system	Check for air in the fuel system. Tighten or replace the fuel connections, fuel lines, fuel tank standpipe, and fuel filters as necessary.
OK Go To Next Step	
STEP 5 Air intake system restriction is above specification	Check the air intake system for restriction. Clean or replace the air filter and inlet piping as necessary. Refer to Procedure 010-013 (Air Cleaner Assembly (Engine Mounted)) in Section 4.
OK Go To Next Step	
STEP 6 Aftercooler element is restricted	Inspect the aftercooler element for restriction. Clean or replace the core if necessary. Refer to Procedure 010-005 (Aftercooler Assembly (Sea Water)) in Section 6.
OK Go To Next Step	
STEP 7 Exhaust system restriction is **not** within specification	Check the exhaust system for restrictions. Contact a Cummins Authorized Repair Facility.
OK Go To Next Step	
STEP 8 Idling with excessive load	Use the PTO feature for loaded conditions at low engine speeds. Refer to the OEM service manual.
OK Go To Next Step	

To buy Cummins Parts and Service Manuals, Training Guides, or Tools go to our website at https://store.cummins.com

Engine Speed Surges Under Load or in Operating Range

Cause	Correction
STEP 9 Fuel grade is **not** correct for the application or the fuel quality is poor	Operate the engine from a tank of high-quality fuel. Refer to Procedure 018-002 (Fuel Recommendations and Specifications) in Section V.
OK Go To Next Step	
STEP 10 Fuel leak	Check the fuel lines, fuel connections, and fuel filters for leaks. Check the fuel lines to the supply tanks. Refer to the OEM service manual.
OK Go To Next Step	
STEP 11 Moisture in the wiring harness connectors	Dry the connectors with Cummins electronic cleaner, Part Number 3824510.
OK Go To Next Step	
STEP 12 Contact a Cummins® Authorized Repair Facility	

To buy Cummins Parts and Service Manuals, Training Guides, or Tools go to our website at https://store.cummins.com

Engine Starts But Will Not Keep Running

Cause	Correction
STEP 1 Electronic fault codes are active	For instructions on how to read active fault codes, refer to Procedure 101-007 (Electronic Controlled Fuel System) in Section V. If fault codes are active, contact a Cummins Authorized Repair Facility.
OK Go To Next Step	
STEP 2 Battery voltage supply to the electronic control module (ECM) is low, interrupted, or open	Check the battery connections, the fuses, and the unswitched battery supply circuit. Refer to Procedure 013-009 (Battery Cables and Connections) in Section 4, Procedure 019-043 (Engine Wiring Harness) in Section 4, and Procedure 101-008 (Engine Operating Range) in Section 1.
OK Go To Next Step	
STEP 3 Fuel filter or fuel inlet restriction	Check the flow through the fuel filter. Replace the fuel filter if necessary. Refer to Procedure 006-015 (Fuel Filter (Spin-On Type)) in Section 5. Clean all prefilters and screens. Check the fuel suction line for restriction.
OK Go To Next Step	
STEP 4 Air in the fuel system	Check for air in the fuel system. Tighten or replace the fuel connections, fuel lines, fuel tank standpipe, and fuel filters as necessary.
OK Go To Next Step	
STEP 5 Fuel grade is **not** correct for the application or the fuel quality is poor	Operate the engine from a tank of high-quality fuel. Refer to Procedure 018-002 (Fuel Recommendations and Specifications) in Section V.
OK Go To Next Step	
STEP 6 Engine idle speed is set too low (electronically controlled fuel systems)	Verify the correct idle speed setting. Increase the idle speed with the idle increment switch or an electronic service tool. Refer to Procedure 101-008 (Engine Operating Range) in Section 1.
OK Go To Next Step	
STEP 7 Moisture in the wiring harness connectors	Dry the connectors with Cummins electronic cleaner, Part Number 3824510.
OK Go To Next Step	
STEP 8 Contact a Cummins® Authorized Repair Facility	

To buy Cummins Parts and Service Manuals, Training Guides, or Tools go to our website at https://store.cummins.com

Engine Vibration Excessive

Cause	Correction
STEP 1 Electronic fault codes are active	For instructions on how to read active fault codes, refer to Procedure 101-007 (Electronic Controlled Fuel System) in Section 1. If fault codes are active, contact a Cummins Authorized Repair Facility.
OK Go To Next Step	
STEP 2 Engine is misfiring	Refer to the Engine Runs Rough or Misfires symptom tree.
OK Go To Next Step	
STEP 3 Engine idle speed is set too low (electronically controlled fuel systems)	Verify the correct idle speed setting. Increase the idle speed with the idle increment switch or an electronic service tool. Refer to Procedure 101-008 (Engine Operating Range) in Section 1.
OK Go To Next Step	
STEP 4 Belt-driven accessories are malfunctioning	Check the fan hub, alternator, refrigerant compressor, and hydraulic pump for interference. Isolate belt-driven accessories and check for vibration. Refer to Procedure 008-080 (Belt Tensioner, Automatic (Water Pump)), and Procedure 013-005 (Drive Belt, Alternator)) in Section 6.
OK Go To Next Step	
STEP 5 Engine mounts are worn, damaged, or **not** correct	Check the engine mounts. Refer to Procedure 000-008 (Engine Mounting Bolts) in Section 6 and 016-026 (Engine Mounting Isolators) in Section 6.
OK Go To Next Step	
STEP 6 Drivetrain or propeller is damaged or is **not** correctly matched to the engine	Check for the correct gearing, drivetrain components, or propeller. Refer to Procedure 016-025 (Propeller Shaft) in Section A.
OK Go To Next Step	
STEP 7 Vibration damper is damaged	Inspect the vibration damper. Refer to Procedure 001-052 (Vibration Damper, Viscous) in Section 7.
OK Go To Next Step	
STEP 8 Flywheel or flexplate capscrews are loose or broken	Check the flywheel or flexplate and the mounting capscrews. Refer to a Cummins® Authorized Repair Location.
OK Go To Next Step	

To buy Cummins Parts and Service Manuals, Training Guides, or Tools go to our website at https://store.cummins.com

Engine Vibration Excessive

Cause	Correction
STEP 9 Flywheel housing is **not** aligned correctly	Check the flywheel housing alignment. Refer to a Cummins® Authorized Repair Location.

OK
Go To Next Step

STEP 10 Power take-off (PTO) is damaged	Check the PTO for damage and correct installation. Refer to the OEM service manual.

OK
Go To Next Step

STEP 11 Internal engine damage	Analyze the oil and inspect the filters to locate an area of probable damage. Refer to a Cummins® Authorized Repair Location.

OK
Go To Next Step

STEP 12
Contact a Cummins® Authorized Repair Facility

To buy Cummins Parts and Service Manuals, Training Guides, or Tools go to our website at https://store.cummins.com

Engine Will Not Crank or Cranks Slowly (Electric Starter)

Cause	Correction
STEP 1 Neutral safety switch engaged or malfunctioning	Put gear lever in neutral or check for faulty switch. Refer to boat or component manufacturer.
OK Go To Next Step	
STEP 2 Batteries are cold	Check the battery heater. Refer to the OEM service manual.
OK Go To Next Step	
STEP 3 Electronic fault codes are active	For instructions on how to read active fault codes, refer to Procedure 101-007 (Electronic Controlled Fuel System) in Section 1. If fault codes are active, contact a Cummins Authorized Repair Facility.
OK Go To Next Step	
STEP 4 Battery voltage is low	Check the batteries and the unswitched battery supply circuit. Refer to Procedure 013-007 (Batteries) in Section 6.
OK Go To Next Step	
STEP 5 Battery cables or connections are loose, broken, or corroded (excessive resistance)	Check the battery cables and connections. Refer to Procedure 013-009 (Battery Cables and Connections) in Section 4.
OK Go To Next Step	
STEP 6 Battery capacity is below specification	Refer to Procedure 018-021 (Electrical System Specifications) in Section V. Replace the batteries if necessary.
OK Go To Next Step	
STEP 7 Battery cables are **not** the correct gauge or length	Replace the battery cables with larger gauge or shorter length cables. Refer to Procedure 013-007 (Batteries) in Section V.
OK Go To Next Step	
STEP 8 Engine-driven units are engaged	Disengage engine-driven units.
OK Go To Next Step	
STEP 9 Lubricating oil level is above specification	Check the oil level. Verify the dipstick calibration and oil pan capacity. Fill the system to the specified level. Refer to Procedure 007-043 (Lubricating Oil Level) in Section 3.
OK Go To Next Step	

To buy Cummins Parts and Service Manuals, Training Guides, or Tools go to our website at https://store.cummins.com

Engine Will Not Crank or Cranks Slowly (Electric Starter)

Cause		Correction
STEP 10 Lubricating oil does **not** meet specifications for operating conditions	.....	Change the oil and filters. Refer to Procedure 007-002 (Lubricating Oil and Filters) in Section 5. Use the oil recommended in Section V.
OK Go To Next Step		
STEP 11 Starting circuit component is malfunctioning	.....	Check the starting circuit components. Refer to the OEM service manual.
OK Go To Next Step		
STEP 12 OEM starter interlock devices engaged	.....	Check the starter interlock devices. Refer to the OEM service manual.
OK Go To Next Step		
STEP 13 Lubricating oil pressure switch, gauge, or sensor is malfunctioning or is **not** in the correct location	.....	Check the oil pressure switch, gauge, or sensor for correct operation and location. Refer to the OEM service manual.
OK Go To Next Step		
STEP 14 Hydraulic lock in a cylinder	.....	Remove the injectors and rotate the crankshaft. Look for the source of fluid in the cylinder. Refer to a Cummins® Authorized Repair Location.
OK Go To Next Step		
STEP 15 Internal engine damage	.....	Analyze the oil and inspect the filters to locate an area of probable damage. Refer to a Cummins® Authorized Repair Location.
OK Go To Next Step		
STEP 16 Contact a Cummins® Authorized Repair Facility		

To buy Cummins Parts and Service Manuals, Training Guides, or Tools go to our website at https://store.cummins.com

Engine Will Not Reach Rated Speed (RPM)

Cause	Correction
STEP 1 Electronic fault codes are active	For instructions on how to read active fault codes, refer to Procedure 101-007 (Electronic Controlled Fuel System) in Section 1. If fault codes are active, contact a Cummins Authorized Repair Facility.
OK Go To Next Step	
STEP 2 Programmable parameters or selected features are **not** correct	Check the programmable parameters and the selected features with an electronic service tool. Set the parameters and features again if necessary. Refer to Procedure 101-008 (Engine Operating Range) in Section 1.
OK Go To Next Step	
STEP 3 Vessel is overloaded or the propeller is incorrect	Vessel **must** be propped to allow engine to reach rated speed (rpm).
OK Go To Next Step	
STEP 4 Vessel is malfunctioning or parasitics are excessive	Check the vessel's bottom, propeller, transmission, and driven accessories. Refer to the OEM service manual.
OK Go To Next Step	
STEP 5 Poor fuel quality or wrong fuel grade	Verify by operating the engine from a temporary supply of number 2 diesel fuel. Check fuel specifications for proper fuel grade. Refer to Procedure 018-002 (Fuel Recommendations and Specifications) in Section V.
OK Go To Next Step	
STEP 6 Engine power output is low	Refer to the Engine Power Output Low symptom tree.
OK Go To Next Step	
STEP 7 Contact a Cummins® Authorized Repair Facility	

To buy Cummins Parts and Service Manuals, Training Guides, or Tools go to our website at https://store.cummins.com

Engine Will Not Shut Off

Cause	Correction
STEP 1 Electronic fault codes are active	For instructions on how to read active fault codes, refer to Procedure 101-007 (Electronic Controlled Fuel System) in Section 1. If fault codes are active, contact a Cummins Authorized Repair Facility.
OK Go To Next Step	
STEP 2 Keyswitch circuit is malfunctioning	Check the equipment or vessel keyswitch circuit. Refer to the OEM service manual.
OK Go To Next Step	
STEP 3 Turbocharger oil seal is leaking	Check the turbocharger compressor and turbine seals. Contact a Cummins Authorized Repair Facility.
OK Go To Next Step	
STEP 4 Engine is running on fumes drawn into the air intake	Check the air intake ducts. Locate and isolate the source of the fumes. Repair as necessary. Refer to the OEM service manual.
OK Go To Next Step	
STEP 5 Electronic control module (ECM) is malfunctioning	Replace the ECM. Refer to a Cummins® Authorized Repair Location.
OK Go To Next Step	
STEP 6 Contact a Cummins® Authorized Repair Facility	

To buy Cummins Parts and Service Manuals, Training Guides, or Tools go to our website at https://store.cummins.com

Exhaust Smoke Excessive Under Load

Cause	Correction
STEP 1 Electronic fault codes are active	For instructions on how to read active fault codes, refer to Procedure 101-007 (Electronic Controlled Fuel System) in Section 1. If fault codes are active, contact a Cummins Authorized Repair Facility.
OK Go To Next Step	
STEP 2 Electronic control module (ECM) calibration is malfunctioning	Verify the ECM calibration is correct. Check the calibration revision history for applicable fixes to the calibration stored in the ECM. Refer to the calibration history spreadsheet ecm_calibration_rev_history.xlson QuickServe® Online or the INCAL™ CD-ROM. Compare the calibration stored in the ECM with the engine rating and Control Parts List (CPL), Bulletin 4021326 or 4021327. If necessary, recalibrate the ECM. Refer to a Cummins® Authorized Repair Location.
OK Go To Next Step	
STEP 3 Engine overloaded	Boat is too heavy or the propellers are too big.
OK Go To Next Step	
STEP 4 Drivetrain or propeller is damaged or is **not** correctly matched to the engine	Check for the correct gearing, drivetrain components, or propeller. Refer to the OEM service manual.
OK Go To Next Step	
STEP 5 Excessive intake air restriction	Clean or replace air filter element or damaged air intake piping.
OK Go To Next Step	
STEP 6 Fuel grade is **not** correct for the application or the fuel quality is poor	Operate the engine from a tank of high-quality fuel. Refer to Procedure 018-002 (Fuel Recommendations and Specifications) in Section V.
OK Go To Next Step	
STEP 7 Injector is malfunctioning	Replace the malfunctioning injector. Contact a Cummins Authorized Repair Facility.
OK Go To Next Step	

To buy Cummins Parts and Service Manuals, Training Guides, or Tools go to our website at https://store.cummins.com

Exhaust Smoke Excessive Under Load

Cause	Correction
STEP 8 Intake or exhaust leak	Check intake and exhaust systems for loose or damaged piping connections and/or missing pipe plugs. Check turbocharger and exhaust manifold mounting. Refer to the OEM service manual and a Cummins® Authorized Repair Location.

OK
Go To Next Step

STEP 9 Turbocharger is malfunctioning	Monitor the turbocharger boost pressure with an electronic service tool. Refer to the OEM service manual or a Cummins® Authorized Repair Location.

OK
Go To Next Step

STEP 10 Engine is cold	Allow the engine to warm to operating temperature. If the engine will **not** reach operating temperature, refer to the Coolant Temperature is Below Normal symptom tree.

OK
Go To Next Step

STEP 11
Contact a Cummins® Authorized Repair Facility

To buy Cummins Parts and Service Manuals, Training Guides, or Tools go to our website at https://store.cummins.com

Fuel Consumption Excessive

Cause	Correction
STEP 1 Electronic fault codes are active	For instructions on how to read active fault codes, refer to Procedure 101-007 (Electronic Controlled Fuel System) in Section 1. If fault codes are active, contact a Cummins Authorized Repair Facility.
OK Go To Next Step	
STEP 2 Operator technique is **not** correct	Explain correct engine operation to the operator. Refer to Procedure 101-015 (Operating the Engine) in Section 1.
OK Go To Next Step	
STEP 3 Fuel economy expectations are **not** reasonable	Verify what factors compose the operator's expectations. Run a VE/VMS® simulation for automotive applications to determine the expected fuel economy or perform a trial run to establish the actual fuel economy. Refer to the OEM service manual.
OK Go To Next Step	
STEP 4 Auxiliary devices using fuel from vehicle's fuel supply tank(s)	Check the fuel consumption of the auxiliary devices. Refer to the OEM service manual.
OK Go To Next Step	
STEP 5 Fuel leak	Check the fuel lines, fuel connections, and fuel filters for leaks. Check the fuel lines to the supply tanks. Refer to the OEM service manual.
OK Go To Next Step	
STEP 6 Fuel grade is **not** correct for the application or the fuel quality is poor	Operate the engine from a tank of high-quality fuel. Refer to Procedure 018-002 (Fuel Recommendations and Specifications) in Section V.
OK Go To Next Step	
STEP 7 Air intake or exhaust leaks	Check for loose or damaged piping connections and missing pipe plugs. Check the turbocharger and exhaust manifold mounting. Refer to a Cummins® Authorized Repair Location.
OK Go To Next Step	
STEP 8 Air intake system restriction is above specification	Check the air intake system for restriction. Clean or replace the air filter and inlet piping as necessary. Refer to Procedure 010-013 (Air Cleaner Assembly (Engine Mounted)) in Section 4.
OK Go To Next Step	

To buy Cummins Parts and Service Manuals, Training Guides, or Tools go to our website at https://store.cummins.com

Fuel Consumption Excessive

Cause	Correction
STEP 9 Exhaust system restriction is **not** within specification	Check the exhaust system for restrictions. Contact a Cummins Authorized Repair Facility.
OK Go To Next Step	
STEP 10 Lubricating oil level is above specification	Check the oil level. Verify the dipstick calibration and oil pan capacity. Fill the system to the specified level. Refer to Procedure 007-043 (Lubricating Oil Level) in Section 3.
OK Go To Next Step	
STEP 11 Lubricating oil does **not** meet specifications for operating conditions	Change the oil and filters. Refer to Procedure 007-002 (Lubricating Oil and Filters) in Section 5. Use the oil recommended in Section V.
OK Go To Next Step	
STEP 12 Fuel cooler is malfunctioning (if equipped)	Check the fuel cooler. Refer to a Cummins® Authorized Repair Location.
OK Go To Next Step	
STEP 13 Vessel is malfunctioning or parasitics are excessive	Check the vessel's bottom, propeller, transmission, and driven accessories. Refer to the OEM service manual.
OK Go To Next Step	
STEP 14 Vessel is overloaded or the propeller is incorrect	Vessel **must** be propped to allow engine to reach rated speed (rpm).
OK Go To Next Step	
STEP 15 Overhead adjustments are **not** correct	Measure and adjust the overhead settings. Refer to Procedure 003-004 (Overhead Set) in Section 8.
OK Go To Next Step	
STEP 16 Internal engine damage	Analyze the oil and inspect the filters to locate an area of probable damage. Refer to a Cummins® Authorized Repair Location.
OK Go To Next Step	
STEP 17 Contact a Cummins® Authorized Repair Facility	

To buy Cummins Parts and Service Manuals, Training Guides, or Tools go to our website at https://store.cummins.com

Fuel in Coolant

Cause	Correction
STEP 1 Bulk coolant supply is contaminated	Check the bulk coolant supply. Drain the coolant and replace with noncontaminated coolant. Replace the coolant filters.
OK Go To Next Step	
STEP 2 Cylinder head is cracked or porous	Pressure-test the cylinder head. Refer to a Cummins® Authorized Repair Location.
OK Go To Next Step	
STEP 3 Contact a Cummins® Authorized Repair Facility	

To buy Cummins Parts and Service Manuals, Training Guides, or Tools go to our website at https://store.cummins.com

Fuel in the Lubricating Oil

Cause	Correction
STEP 1 Bulk oil supply is contaminated	Check the bulk oil supply. Drain the oil and replace with noncontaminated oil. Replace the oil filters.
OK Go To Next Step	
STEP 2 Engine idle time is excessive	Low oil and coolant temperatures can be caused by long idle time (greater than 10 minutes). Shut off the engine rather than idle for long periods. If idle time is necessary, raise the idle speed.
OK Go To Next Step	
STEP 3 Injector is malfunctioning	Perform the single-cylinder cutout test. Replace the injectors as necessary. Refer to a Cummins® Authorized Repair Location.
OK Go To Next Step	
STEP 4 Injector sealing washer is **not** correct	Remove the injectors and verify the injector sealing washer thickness. Refer to a Cummins®® Authorized Repair Location.
OK Go To Next Step	
STEP 5 Cylinder head is cracked or porous	Pressure-test the cylinder head. Refer to a Cummins® Authorized Repair Location.
OK Go To Next Step	
STEP 6 Fuel injection pump is malfunctioning	Inspect the cam housing for cracks and damage. Refer to a Cummins® Authorized Repair Location.
OK Go To Next Step	
STEP 7 Internal engine damage	Analyze the oil and inspect the filters to locate an area of probable damage. Refer to a Cummins® Authorized Repair Location.
OK Go To Next Step	
STEP 8 Contact a Cummins® Authorized Repair Facility	

To buy Cummins Parts and Service Manuals, Training Guides, or Tools go to our website at https://store.cummins.com

Fuel or Lubricating Oil Leaking From Exhaust Manifold

Cause	Correction
STEP 1 Engine is operating for extended periods under light- or no-load conditions (slobbering)	Review the engine operating instructions in Section 1.
OK Go To Next Step	
STEP 2 Intake and exhaust system restricted	Check the intake and exhaust systems for restrictions. Inspect the intake air filter and replace as necessary.
OK Go To Next Step	
STEP 3 Turbocharger oil drain line is restricted	Remove the turbocharger oil drain line and check for restriction. Clean or replace the oil drain line. Refer to a Cummins® Authorized Repair Location.
OK Go To Next Step	
STEP 4 Turbocharger oil seal is leaking	Check the turbocharger compressor and turbine seals. Contact a Cummins Authorized Repair Facility.
OK Go To Next Step	
STEP 5 Worn piston rings	Check for excessive blowby. Refer to a Cummins® Authorized Repair Location.
OK Go To Next Step	
STEP 6 Valve guide seals are leaking	Inspect the valve guide seals. Replace if necessary. Refer to a Cummins® Authorized Repair Location.
OK Go To Next Step	
STEP 7 Cylinder head is cracked or porous	Inspect the cylinder head for cracks or porosity. Refer to a Cummins® Authorized Repair Location.
OK Go To Next Step	
STEP 8 Contact a Cummins® Authorized Repair Facility	

To buy Cummins Parts and Service Manuals, Training Guides, or Tools go to our website at https://store.cummins.com

Intake Manifold Air Temperature Above Specification

Cause		Correction
STEP 1 Electronic fault codes are active	.....	For instructions on how to read active fault codes, refer to Procedure 101-007 (Electronic Controlled Fuel System) in Section 1. If fault codes are active, contact a Cummins Authorized Repair Facility.
OK Go To Next Step		
STEP 2 Intake manifold air temperature sensor has an in-range failure	.....	Check the intake manifold air temperature sensors that correspond to the fault code. Replace the sensor if necessary. Refer to a Cummins® Authorized Repair Location.
OK Go To Next Step		
STEP 3 Intake manifold temperature gauge is malfunctioning, if equipped	.....	Test the temperature gauge. Refer to the OEM service manual.
OK Go To Next Step		
STEP 4 Aftercooler element is restricted	.....	Inspect the aftercooler element for restriction. Clean or replace the core if necessary. Refer to Procedure 010-005 (Aftercooler Assembly (Sea water)) in Section 6.
OK Go To Next Step		
STEP 5 Vessel is malfunctioning or parasitics are excessive	.....	Check the vessel's bottom, propeller, transmission, and driven accessories. Refer to the OEM service manual.
OK Go To Next Step		
STEP 6 Drive belt is loose, tight, or **not** in alignment	.....	Check and adjust the drive belt as needed. Refer to Procedure 013-005 (Drive Belt, Alternator) in Section 6.
OK Go To Next Step		
STEP 7 Contact a Cummins® Authorized Repair Facility		

To buy Cummins Parts and Service Manuals, Training Guides, or Tools go to our website at https://store.cummins.com

Intake Manifold Pressure (Boost) is Below Normal

Cause	Correction
STEP 1 Electronic fault codes are active	For instructions on how to read active fault codes, refer to Procedure 101-007 (Electronic Controlled Fuel System) in Section 1. If fault codes are active, contact a Cummins Authorized Repair Facility.
OK Go To Next Step	
STEP 2 Intake manifold pressure sensor is malfunctioning	Check the intake manifold pressure sensor. Refer to a Cummins® Authorized Repair Location.
OK Go To Next Step	
STEP 3 Air intake or exhaust leaks	Check for loose or damaged piping connections and missing pipe plugs. Check the turbocharger and exhaust manifold mounting. Refer to a Cummins® Authorized Repair Location.
OK Go To Next Step	
STEP 4 Air intake system restriction is above specification	Check the air intake system for restriction. Clean or replace the air filter and inlet piping as necessary. Refer to Procedure 010-013 (Air Cleaner Element) in Section A.
OK Go To Next Step	
STEP 5 Exhaust system restriction is **not** within specification	Check the exhaust system for restrictions. Contact a Cummins Authorized Repair Facility.
OK Go To Next Step	
STEP 6 Aftercooler is restricted	Check the aftercooler for restriction. Refer to Procedure 010-005 (Aftercooler Assembly (Sea Water) in Section 6.
OK Go To Next Step	
STEP 7 Turbocharger is **not** correct	Check the turbocharger part number and compare it to the Control Parts List (CPL), Bulletin 3379133 or 4021327. Replace the turbocharger if necessary. Refer to a Cummins® Authorized Repair Location.
OK Go To Next Step	
STEP 8 Turbocharger is worn or damaged	Check the turbocharger for damage. Measure the turbine and compressor wheel clearances. Refer to a Cummins® Authorized Repair Location.
OK Go To Next Step	

To buy Cummins Parts and Service Manuals, Training Guides, or Tools go to our website at https://store.cummins.com

Intake Manifold Pressure (Boost) is Below Normal

Cause	Correction
STEP 9 Engine power output is low	Refer to the Engine Power Output is Low symptom tree.

OK
Go To Next Step

STEP 10
Contact a Cummins® Authorized Repair Facility

Lubricating Oil Consumption Excessive

Cause	Correction
STEP 1 Verify the oil consumption rate	Check the amount of oil added versus the hours of operation.
OK Go To Next Step	
STEP 2 Lubricating oil leak (external)	Inspect the engine for external oil leaks. Tighten the capscrews, pipe plugs, and fittings. Replace gaskets, if necessary. Refer to a Cummins® Authorized Repair Location.
OK Go To Next Step	
STEP 3 Lubricating oil level is above specification	Check the oil level. Verify the dipstick calibration and oil pan capacity. Fill the system to the specified level. Refer to Procedure 007-043 (Lubricating Oil Level) in Section 3.
OK Go To Next Step	
STEP 4 Lubricating oil does **not** meet specifications for operating conditions	Change the oil and filters. Refer to Procedure 007-002 (Lubricating Oil and Filters) in Section 5. Use the oil recommended in Section V.
OK Go To Next Step	
STEP 5 Lubricating oil drain interval is excessive	Verify the correct lubricating oil drain interval. Refer to Procedure 102-002 (Maintenance Schedule) in Section 2.
OK Go To Next Step	
STEP 6 Lubricating oil cooler is leaking	Check the lubricating oil cooler for coolant leaks. Refer to the Coolant Loss - Internal troubleshooting symptom tree, if oil is found.
OK Go To Next Step	
STEP 7 Engine angularity during operation exceeds specification	Refer to the Engine Specifications Data Sheet for angularity specifications for the engine being serviced. For marine applications, see the Recreational Installation Directions for Marine Engines, Bulletin 3884649.
OK Go To Next Step	
STEP 8 Turbocharger oil seal is leaking	Check the turbocharger compressor and turbine seals. Contact a Cummins Authorized Repair Facility.
OK Go To Next Step	

To buy Cummins Parts and Service Manuals, Training Guides, or Tools go to our website at https://store.cummins.com

Lubricating Oil Consumption Excessive

Cause		Correction
STEP 9 Blowby excessive	.....	Check for excessive blowby. Refer to the OEM service manual or a Cummins® Authorized Repair Location.

OK
Go To Next Step

STEP 10 Lubricating oil is contaminated with coolant or fuel	.....	Contact a Cummins Authorized Repair Facility.

OK
Go To Next Step

STEP 11 Internal engine damage	.....	Analyze the oil and inspect the filters to locate an area of probable damage. Refer to a Cummins® Authorized Repair Location.

OK
Go To Next Step

STEP 12
Contact a Cummins® Authorized Repair Facility

To buy Cummins Parts and Service Manuals, Training Guides, or Tools go to our website at https://store.cummins.com

Lubricating Oil Contaminated

Cause	Correction
STEP 1 Identify lubricating oil contamination	Perform an oil analysis to determine the contaminants.
OK Go To Next Step	
STEP 2 Lubricating oil drain interval is excessive	Verify the correct lubricating oil drain interval. Refer to Procedure 102-002 (Maintenance Schedule) in Section 2.
OK Go To Next Step	
STEP 3 Fuel in the lubricating oil	Refer to the Fuel in the Lubricating Oil symptom tree.
OK Go To Next Step	
STEP 4 Lubricating oil is contaminated with coolant or fuel	Change the oil and filters. Refer to Procedure 007-002 (Lubricating Oil and Filters) in Section 5.
OK Go To Next Step	
STEP 5 Lubricating oil sludge is excessive	Change the oil and filters. Refer to Procedure 007-002 (Lubricating Oil and Filters) in Section 5 and the Lubricating Oil Sludge in the Crankcase Excessive symptom tree.
OK Go To Next Step	
STEP 6 Bulk oil supply is contaminated	Check the bulk oil supply. Drain the oil and replace with noncontaminated oil. Replace the oil filter(s). Refer to Procedure 007-002 (Lubricating Oil and Filters) in Section 5.
OK Go To Next Step	
STEP 7 Internal coolant leaks	Refer to the Coolant Loss - Internal symptom tree.
OK Go To Next Step	
STEP 8 Aftercooler is leaking	Inspect and pressure-test the aftercooler for leaks. Refer to Procedure 010-005 (Aftercooler Assembly Sea water) in Section 6.
OK Go To Next Step	
STEP 9 Contact a Cummins® Authorized Repair Facility	

To buy Cummins Parts and Service Manuals, Training Guides, or Tools go to our website at https://store.cummins.com

Lubricating Oil Loss

Cause		Correction
STEP 1 Lubricating oil leak (external)	.....	Inspect the engine for external oil leaks. Tighten the capscrews, pipe plugs, and fittings. Replace gaskets, if necessary. Refer to a Cummins® Authorized Repair Location.
OK Go To Next Step		
STEP 2 Lubricating oil does **not** meet specifications for operating conditions	.....	Change the oil and filters. Refer to Procedure 007-002 (Lubricating Oil and Filters) in Section 5. Use the oil recommended in Section V.
OK Go To Next Step		
STEP 3 Lubricating oil cooler is leaking	.....	Check for lubricating oil in the coolant. Refer to the OEM service manual or a Cummins® Authorized Repair Location.
OK Go To Next Step		
STEP 4 Blowby excessive	.....	Check for excessive blowby. Refer to the OEM service manual or a Cummins® Authorized Repair Location.
OK Go To Next Step		
STEP 5 Turbocharger oil seal is leaking	.....	Check the turbocharger compressor and turbine seals. Contact a Cummins Authorized Repair Facility.
OK Go To Next Step		
STEP 6 Internal engine damage	.....	Analyze the oil and inspect the filters to locate an area of probable damage. Refer to a Cummins® Authorized Repair Location.
OK Go To Next Step		
STEP 7 Contact a Cummins® Authorized Repair Facility		

To buy Cummins Parts and Service Manuals, Training Guides, or Tools go to our website at https://store.cummins.com

Lubricating Oil Pressure High

Cause	Correction
STEP 1 Electronic fault codes are active	For instructions on how to read active fault codes, refer to Procedure 101-007 (Electronic Controlled Fuel System) in Section 1. If fault codes are active, contact a Cummins Authorized Repair Facility.
OK Go To Next Step	
STEP 2 Coolant temperature is below specification	Refer to the Coolant Temperature is Below Normal symptom tree.
OK Go To Next Step	
STEP 3 Lubricating oil does **not** meet specifications for operating conditions	Change the oil and filters. Refer to Procedure 007-002 (Lubricating Oil and Filters) in Section 5. Use the oil recommended in Section V.
OK Go To Next Step	
STEP 4 OEM installed lubricating oil pressure switch, gauge or sensor is malfunctioning or is not in correct location	Measure the lubricating oil pressure. Refer to the OEM service manual.
OK Go To Next Step	
STEP 5 Engine installed lubricating oil pressure sensor/ switch or circuit is malfunctioning (electronic controlled fuel system)	Measure the lubricating oil pressure. Refer to a Cummins® Authorized Repair Location.
OK Go To Next Step	
STEP 6 Lubricating oil filter plumbing **not** routed correctly	Verify the routing of the lubricating filter plumbing is correct. Refer to a Cummins® Authorized Repair Location.
OK Go To Next Step	
STEP 7 Contact a Cummins® Authorized Repair Facility	

To buy Cummins Parts and Service Manuals, Training Guides, or Tools go to our website at https://store.cummins.com

Lubricating Oil Pressure Low

Cause	Correction
STEP 1 Electronic fault codes are active	For instructions on how to read active fault codes, refer to Procedure 101-007 (Electronic Controlled Fuel System) in Section 1. If fault codes are active, contact a Cummins Authorized Repair Facility.
OK Go To Next Step	
STEP 2 OEM installed lubricating oil pressure switch, gauge or sensor is malfunctioning or is not in correct location	Measure the lubricating oil pressure. Refer to the OEM service manual.
OK Go To Next Step	
STEP 3 Engine installed lubricating oil pressure sensor/ switch or circuit is malfunctioning (electronic controlled fuel system)	Measure the lubricating oil pressure. Refer to a Cummins® Authorized Repair Location.
OK Go To Next Step	
STEP 4 Lubricating oil level is above or below specification	Check the oil level. Add or drain oil, if necessary. Refer to Procedure 007-043 (Lubricating Oil Level) in Section 3 and Procedure 007-002 (Lubricating Oil and Filters) in Section 5.
OK Go To Next Step	
STEP 5 Engine angularity during operation exceeds specification	Refer to the Engine Specification Data Sheets for angularity specifications for the engine being serviced. For marine engines, see Bulletin 3884649.
OK Go To Next Step	
STEP 6 Lubricating oil leak (external)	Inspect the engine for external oil leaks. Tighten the capscrews, pipe plugs, and fittings. Replace gaskets, if necessary. Refer to a Cummins® Authorized Repair Location.
OK Go To Next Step	
STEP 7 Lubricating oil does **not** meet specifications for operating conditions	Change the oil and filters. Refer to Procedure 007-002 (Lubricating Oil and Filters) in Section 5. Use the oil recommended in Section V.
OK Go To Next Step	
STEP 8 Lubricating oil is contaminated with coolant or fuel	Change the oil and filters. Refer to Procedure 007-002 (Lubricating Oil and Filters) in Section 5.
OK Go To Next Step	

To buy Cummins Parts and Service Manuals, Training Guides, or Tools go to our website at https://store.cummins.com

Lubricating Oil Pressure Low

Cause	Correction
STEP 9 Lubricating oil filter is plugged	Change the oil and filter. Refer to Procedure 007-002 (Lubricating Oil and Filters) in Section 5.
OK Go To Next Step	
STEP 10 Coolant temperature is above specification	Check the coolant level. Refer to Procedure 008-066 (Coolant Level) in Section 3 and the Coolant Temperature Above Normal - Gradual Overheat symptom tree.
OK Go To Next Step	
STEP 11 Lubricating oil filter plumbing **not** routed correctly	Verify the routing of the lubricating filter plumbing is correct. Refer to a Cummins® Authorized Repair Location.
OK Go To Next Step	
STEP 12 Lubricating oil filter bypass valve is malfunctioning	Check the bypass valve. Refer to a Cummins® Authorized Repair Location.
OK Go To Next Step	
STEP 13 Main oil pressure regulator is malfunctioning	Check the main oil pressure regulator assembly. Refer to a Cummins® Authorized Repair Location.
OK Go To Next Step	
STEP 14 Internal engine damage or internal lubricating oil leak	Analyze the lubricating oil. Inspect the oil filter. Refer to a Cummins® Authorized Repair Location.
OK Go To Next Step	
STEP 15 Contact a Cummins® Authorized Repair Facility	

To buy Cummins Parts and Service Manuals, Training Guides, or Tools go to our website at https://store.cummins.com

Lubricating Oil Sludge in the Crankcase Excessive

Cause	Correction
STEP 1 Bulk oil supply is contaminated	Check the bulk oil supply. Drain the oil and replace with noncontaminated oil. Replace the oil filter(s). Refer to Procedure 007-002 (Lubricating Oil and Filters) in Section 5.
OK Go To Next Step	
STEP 2 Lubricating oil does **not** meet specifications for operating conditions	Change the oil and filters. Refer to Procedure 007-002 (Lubricating Oil and Filters) in Section 5. Use the oil recommended in Section V.
OK Go To Next Step	
STEP 3 Lubricating oil drain interval is excessive	Verify the correct lubricating oil drain interval. Refer to Procedure 102-002 (Maintenance Schedule) in Section 2.
OK Go To Next Step	
STEP 4 Fuel grade is **not** correct for the application or the fuel quality is poor	Operate the engine from a tank of high-quality fuel. Refer to Procedure 018-002 (Fuel Recommendations and Specifications) in Section V.
OK Go To Next Step	
STEP 5 Coolant temperature is below specification	Refer to the Coolant Temperature is Below Normal symptom tree.
OK Go To Next Step	
STEP 6 Bulk oil supply is contaminated	Check the bulk oil supply. Drain the oil and replace with noncontaminated oil. Replace the oil filter(s). Refer to Procedure 007-002 (Lubricating Oil and Filters) in Section 5.
OK Go To Next Step	
STEP 7 Lubricating oil temperature is above specification	Contact a Cummins Authorized Repair Facility.
OK Go To Next Step	
STEP 8 Air intake system restriction is above specification	Check the air intake system for restriction. Clean or replace the air filter and inlet piping as necessary. Refer to Procedure 010-013 (Air Cleaner Element) in Section 4 to check the restriction and Section 6 to clean or replace the air filter.
OK Go To Next Step	

To buy Cummins Parts and Service Manuals, Training Guides, or Tools go to our website at https://store.cummins.com

Lubricating Oil Sludge in the Crankcase Excessive

Cause	Correction
STEP 9 Crankcase pressure is excessive	Check for excessive blowby. Refer to a Cummins® Authorized Repair Location.
OK Go To Next Step	
STEP 10 Exhaust system restriction is **not** within specification	Check the exhaust system for restrictions. Contact a Cummins Authorized Repair Facility.
OK Go To Next Step	
STEP 11 Contact a Cummins® Authorized Repair Facility	

To buy Cummins Parts and Service Manuals, Training Guides, or Tools go to our website at https://store.cummins.com

Smoke, Black — Excessive

Cause	Correction
STEP 1 Electronic fault codes are active	For instructions on how to read active fault codes, refer to Procedure 101-007 (Electronic Controlled Fuel System) in Section 1. If fault codes are active, contact a Cummins Authorized Repair Facility.
OK Go To Next Step	
STEP 2 Load is excessive	Reduce the load. Check and clean the vessel's bottom, or change the propeller. Refer to the manufacturer's specifications.
OK Go To Next Step	
STEP 3 Plugged air filter	Inspect the air cleaner element. Replace as needed. Refer to Procedure 010-013 (Air Cleaner Assembly (Engine Mounted)) in Section A.
OK Go To Next Step	
STEP 4 Aftercooler restricted (if equipped)	Inspect for plugged passages in the aftercooler. Refer to Procedure 010-005 (Aftercooler Assembly (Sea Water)) in Section 6.
OK Go To Next Step	
STEP 5 Exhaust system restriction	Check the exhaust system for any restrictions. Refer to a Cummins® Authorized Repair Location.
OK Go To Next Step	
STEP 6 Air leak between the turbocharger and the intake manifold	Check for leaks in the air crossover tube, hoses, or through holes in the manifold cover and repair or replace if necessary. Refer to a Cummins® Authorized Repair Location.
OK Go To Next Step	
STEP 7 Exhaust leaks at the manifold or turbocharger	Check and correct any leaks in the exhaust manifold or turbocharger gaskets. Check for a cracked exhaust manifold. Refer to a Cummins® Authorized Repair Location.
OK Go To Next Step	
STEP 8 Turbocharger is worn or malfunctioning	Check for the specified boost pressure. Inspect the turbocharger. Replace if necessary. Refer to a Cummins® Authorized Repair Location.
OK Go To Next Step	

To buy Cummins Parts and Service Manuals, Training Guides, or Tools go to our website at https://store.cummins.com

Smoke, Black — Excessive

Cause	Correction
STEP 9 Fuel grade is **not** correct for the application or the fuel quality is poor	Operate the engine from a tank of high-quality fuel. Refer to Procedure 018-002 (Fuel Recommendations and Specifications) in Section V.

OK
Go To Next Step

STEP 10 Injectors worn or malfunctioning	Remove and test the injectors. Replace as necessary. Refer to a Cummins® Authorized Repair Location.

OK
Go To Next Step

STEP 11
Contact a Cummins® Authorized Repair Facility

To buy Cummins Parts and Service Manuals, Training Guides, or Tools go to our website at https://store.cummins.com

Smoke, White — Excessive

Cause	Correction
STEP 1 Electronic fault codes are active	For instructions on how to read active fault codes, refer to Procedure 101-007 (Electronic Controlled Fuel System) in Section 1. If fault codes are active, contact a Cummins Authorized Repair Facility.
OK Go To Next Step	
STEP 2 Starting procedure is **not** correct	Verify the correct starting procedure. Refer to Procedure 101-014 (Normal Starting Procedure) in Section 1.
OK Go To Next Step	
STEP 3 Coolant temperature is below specification or the intake manifold air temperature is below specification	Refer to the Coolant Temperature is Below Normal symptom tree.
OK Go To Next Step	
STEP 4 Keel cooler is malfunctioning (marine engines **only**)	Inspect the keel cooler for proper operation. Refer to a Cummins® Authorized Repair Location.
OK Go To Next Step	
STEP 5 Fuel grade is **not** correct for the application or the fuel quality is poor	Operate the engine from a tank of high-quality fuel. Refer to Procedure 018-002 (Fuel Recommendations and Specifications) in Section V.
OK Go To Next Step	
STEP 6 Electronic control module (ECM) calibration is malfunctioning	Verify the electronic control module (ECM) calibration is correct. Check the calibration revision history for applicable fixes to the calibration stored in the ECM. Refer to the calibration history spreadsheet ecm_calibration_rev_history.xlson QuickServe® Online Internet Website or the INCAL™ calibration CD. Compare the calibration stored in the ECM with the engine rating and the Control Parts List (CPL), Bulletin 4021326 or 4021327. If necessary, recalibrate the ECM. Refer to a Cummins® Authorized Repair Location.
OK Go To Next Step	
STEP 7 Injectors worn or malfunctioning	Remove and test the injectors. Replace as necessary. Refer to a Cummins® Authorized Repair Location.
OK Go To Next Step	

To buy Cummins Parts and Service Manuals, Training Guides, or Tools go to our website at https://store.cummins.com

Smoke, White — Excessive

Cause	Correction
STEP 8 Coolant is leaking into the combustion chamber	Refer to a Cummins® Authorized Repair Location.

OK
Go To Next Step

STEP 9
Contact a Cummins® Authorized Repair Facility

To buy Cummins Parts and Service Manuals, Training Guides, or Tools go to our website at https://store.cummins.com

Turbocharger - Compressor Seal Oil Leak

Cause		Correction
STEP 1 Engine is operating for extended periods under light- or no-load conditions (slobbering)	.....	Review the engine operating instructions. Refer to Procedure 101-015 in Section 1 in the QSB6.7 CM850 Operation and Maintenance Manual, Bulletin 4310650.

OK
Go To Next Step

STEP 2 Boost leak or past boost leaks including hose "blow-offs".	.....	Check for boost leaks. Refer to the equipment manufacturer service information. Interview the operator regarding past boost leaks. If past boost leaks have occurred, make sure the boost piping is installed properly.

OK
Go To Next Step

STEP 3 Air filter is plugged or incorrect	.....	Refer to the equipment manufacturer service information for the correct air filter part number. Refer to the equipment manufacturer service information to check for an air intake restriction.

OK
Go To Next Step

STEP 4 Collapsed or restricted air intake piping between the air filter and turbocharger inlet	.....	Repair or replace the intake piping. Refer to the equipment manufacturer service information.

OK
Go To Next Step

STEP 5 Obstructed or crushed turbocharger drain line	.....	Check the turbocharger oil drain line for restrictions. Refer to the equipment manufacturer service information.

OK
Go To Next Step

STEP 6 Oil coming into the turbocharger inlet side of the turbocharger from closed crankcase ventilation system or atmosphere	.....	Inspect the compressor intake and discharge for oil. If oil is present in the compressor intake, as well as in the discharge, check upstream from the turbocharger for the source of the oil. Refer to the equipment manufacturer service information for removal and installation of intake piping. Reference the Crankcase Gases (Blowby) Excessive troubleshooting symptom tree in Section TS.

OK
Go To Next Step

STEP 7 Excessive axial or radial clearance	.....	Check the turbocharger shaft radial and axial end clearance. Refer to the equipment manufacturer service information.

OK
Go To Next Step

To buy Cummins Parts and Service Manuals, Training Guides, or Tools go to our website at https://store.cummins.com

Turbocharger - Compressor Seal Oil Leak

Cause	Correction
STEP 8 Restricted exhaust system	Check for crushed, collapsed, or restricted exhaust piping, muffler, etc. Refer to the equipment manufacturer service information

OK
Go To Next Step

STEP 9 Engine oil viscosity incorrect	Check the engine oil. Compare to Cummins® Service Bulletin 3810340 (Cummins® Engine Oil and Oil Analysis Recommendations). Refer to Procedure 018-017 in Section V.

OK
Go To Next Step

STEP 10
Contact a Cummins® Authorized Repair Facility

To buy Cummins Parts and Service Manuals, Training Guides, or Tools go to our website at https://store.cummins.com

Turbocharger - Turbine Seal Oil Leak

Cause	Correction
STEP 1 Engine is operating for extended periods under light- or no-load conditions (slobbering)	Review the engine operating instructions. Refer to Procedure 101-015 in Section 1 in the QSB6.7M CM850 Operation and Maintenance Manual, Bulletin 4310650.
OK Go To Next Step	
STEP 2 Obstructed or crushed turbocharger drain line	Check the turbocharger oil drain line for restrictions. Refer to the equipment manufacturer service information.
OK Go To Next Step	
STEP 3 Crankcase pressure is excessive	Check the crankcase pressure. Refer to the Crankcase Gases (Blowby) Excessive troubleshooting symptom tree in Section TS.
OK Go To Next Step	
STEP 4 Restricted exhaust system	Check for crushed, collapsed, or restricted exhaust piping, muffler, etc. Refer to the equipment manufacturer service information.
OK Go To Next Step	
STEP 5 Excessive axial or radial clearance	Check the turbocharger shaft radial and axial end clearance. Refer to the equipment manufacturer service information.
OK Go To Next Step	
STEP 6 Engine oil viscosity incorrect	Check the engine oil. Compare to Cummins® Service Bulletin 3810340 (Cummins® Engine Oil and Oil Analysis Recommendations). Refer to Procedure 018-017 in Section V.
OK Go To Next Step	
STEP 7 Oil coming into the turbocharger from the engine	Refer to the equipment manufacturer service information to remove the turbocharger from the engine and to determine if the exhaust manifold outlet and turbine housing inlet is wet with oil. If oil is present, reference the Lubricating Oil Consumption Excessive troubleshooting symptom tree in Section TS to identify its source.
OK Go To Next Step	
STEP 8 Contact a Cummins® Authorized Repair Facility	

To buy Cummins Parts and Service Manuals, Training Guides, or Tools go to our website at https://store.cummins.com

Notes

Section V - Maintenance Specifications

Section Contents

Page
Air Intake System V-5
Specifications V-5
Capscrew Markings and Torque Values V-20
Capscrew Markings and Torque Values - Metric V-20
Capscrew Markings and Torque Values - U.S. Customary V-21
General Information V-20
Coolant Recommendations and Specifications V-14
Coolant Filter V-16
Coolant Service V-14
Coolant Specifications V-14
General Information V-14
Cooling System V-4
Specifications V-4
Filter Specifications V-9
General Information V-9
Drive Belt Tension V-17
Tension Chart V-17
Electrical System V-7
Batteries (Specific Gravity) V-8
Specifications V-7
Engine Component Torque Values V-18
Torque Table V-18
Exhaust System V-6
Specifications V-6
Fraction, Decimal, Millimeter Conversions V-23
Conversion Chart V-23
Fuel Recommendations and Specifications V-10
Fuel Recommendations V-10
Fuel System V-2
Specifications V-2
General Engine V-1
Specifications V-1
Lubricating Oil Recommendations and Specifications V-11
AfterMarket Oil Additive Usage V-13
General Information V-11
New Engine Break-in Oils V-13
Lubricating Oil System V-3
Specifications V-3
Newton-Meter to Foot-Pound Conversions V-24
Conversion Chart V-24
Pipe Plug Torque Values V-25
Torque Table V-25
Sealants V-19
General Information V-19
Tap-Drill Chart - U.S. Customary and Metric V-26
General Information V-26
Weights and Measures - Conversion Factors V-27
Conversion Chart V-27

To buy Cummins Parts and Service Manuals, Training Guides, or Tools go to our website at https://store.cummins.com

This Page Left Intentionally Blank

General Engine

Specifications

Marine Applications

Listed below are the general specifications for this engine.

Horsepower.....See engine dataplate
Firing Order.....1-5-3-6-2-4
Crankshaft Rotation (viewed from front of engine)..... **Clockwise**

Displacement
- QSC8.3.....8.3 liters [505 in^3]
- QSL9..... 8.9 liters [540 in^3]

Bore and Stroke
- 8.3 liters (QSC8.3 Engine).....114 mm [4.49 in] x 135 mm [5.31 in]
- 8.9 liters (QSL9 Engine)..... 114 mm [4.49 in] x 145 mm [5.71 in]

Dry Weight
- 8.3 liters (QSC8.3 Engine).....880 kg [1940 lb]
- 8.9 liters (QSL9 Engine).....891 kg [1965 lb]

Dry Weight - Engine with Heat Exchanger System - Average
- 8.3 liters (QSC8.3 Engine).....896 kg [1975 lb]
- 8.9 liters (QSL9 Engine).....907 kg [2000 lb]

Overhead Adjustment
- Intake Valve Adjustment..... 0.305 mm [0.012 in]
- Exhaust Valve Adjustment..... 0.559 mm [0.022 in]

To buy Cummins Parts and Service Manuals, Training Guides, or Tools go to our website at https://store.cummins.com

Fuel System

Specifications

Cummins® Common Rail Fuel System

Maximum Allowable Fuel Return Line Pressure
Marine Applications..... 34 kPa [10 in-Hg]
Maximum Allowable Restriction to Fuel Pump (Dirty Filter)
Marine Applications..... 14 kPa [4 in-Hg]
Maximum Allowable Restriction to Fuel Pump (Clean Filter)
Marine Applications..... 8 kPa [2.5 in-Hg]
Minimum Gear Pump Pressure
During Cranking Condition.....34 kPa [5 psi]
During Rated Condition..... 483 kPa [70 psi]
Maximum Filter Pressure Drop..... 138 kPa [20 psi]
Minimum Engine Cranking Speed..... 150 rpm
Maximum Height of Fuel in Tank Above Fuel Pump.....4.12 m [13.5 ft]
Primary Off engine fuel filter element.....10 Micron
Secondary On engine fuel filter element.....3 Micron

To buy Cummins Parts and Service Manuals, Training Guides, or Tools go to our website at https://store.cummins.com

Lubricating Oil System

Specifications

Oil Pressure at Normal Operating Temperature
QSC8.3 Engines
Idle Speed - Minimum in Filter Head Upstream of Filter..... N/A
Idle Speed - Minimum in Main Oil Gallery..... 138 kPa [20 psi]
Rated Speed - Measured in Filter Head Upstream of Filter (Low)..... N/A
Rated Speed - Measured in Filter Head Upstream of Filter (High)..... N/A
Rated Speed - Measured in Main Oil Gallery (Low)..... 276 kPa [40 psi]
Rated Speed - Measured in Main Oil Gallery (High)..... 483 kPa [70 psi]

Oil Pressure at Normal Operating Temperature
QSL9 Engines
Idle Speed - Minimum in Filter Head Upstream of Filter..... N/A
Idle Speed - Minimum in Main Oil Gallery..... 179 kPa [26 psi]
Rated Speed - Measured in Filter Head Upstream of Filter (Low)..... N/A
Rated Speed - Measured in Filter Head Upstream of Filter (High)..... N/A
Rated Speed - Measured in Main Oil Gallery (Low)..... 386 kPa [56 psi]
Rated Speed - Measured in Main Oil Gallery (High)..... 490 kPa [71 psi]

Oil Pan Capacity - Shallow (Option 9351)
QSC8.3 Engines
Low..... 15.1 liter [4.0 gal]
High..... 18.9 liter [5.0 gal]
Total System Capacity (Maximum Sump and Filter)..... 21.6 liter [5.7 gal]
By-Pass Oil Filter Capacity..... 2.6 liter [0.7 gal]

Oil Pan Capacity - Shallow (Option 9467)
QSL9 Engines
Low..... 17.0 liter [4.5 gal]
High..... 20.8 liter [5.5 gal]
Total System Capacity (Maximum Sump and Filter)..... 25.4 liter [6.7 gal]
By-Pass Oil Filter Capacity..... 2.6 liter [0.7 gal]

Oil Pan Capacity - Deep (Option 9397)
QSL9 Engines
Low..... 18.9 liter [5.0 gal]
High..... 22.7 liter [6.0 gal]
Total System Capacity (Maximum Sump and Filter)..... 25.4 liter [6.7 gal]
By-Pass Oil Filter Capacity..... 2.6 liter [0.7 gal]

Oil Temperature
QSC8.3 and QSL9 Engines
Maximum Allowable Oil Temperature (Sump)..... 121°C [250°F]

Oil Consumption Rate
QSC8.3 and QSL9 Engines
Volume Percent of Fuel Consumption Rate..... 0.08 percent

To buy Cummins Parts and Service Manuals, Training Guides, or Tools go to our website at https://store.cummins.com

Cooling System

Specifications

Marine Applications

Coolant Capacity

Engine **Only** .....25 liter [6.5 gal]
Engine Including Heat Exchanger and Integral.....29 liter [7.75 gal]
Minimum Coolant Makeup Capacity.....1.4 liter [0.38 gal]
Maximum Pressure Drop Across Any External Cooling System Circuit.....34 kPa [5 psi]
Maximum Allowable Block Coolant System Pressure.....483 kPa [70 psi]
Maximum Coolant Head From Crankshaft Centerline With 15 psi Pressure Cap.....34 m [112 ft]
Maximum Coolant Temperature at Engine Outlet..... 96°C [205°F]
Minimum Allowable Coolant Expansion Space.....6 percent system capacity
Maximum Sea Water Pressure..... 103 kPa [15 psi]
Maximum Sea Water Pressure Drop Across Heat Exchanger.....34 kPa [5 psi]
Maximum Sea Water Inlet Restriction.....-17 kPa [-5 in Hg]

To buy Cummins Parts and Service Manuals, Training Guides, or Tools go to our website at https://store.cummins.com

Air Intake System

Specifications

Marine Applications

CAUTION

Engine intake air must be filtered to prevent dirt and debris from entering the engine. If the air intake piping is damaged or loose, unfiltered air will enter the engine and cause premature wear.

Maximum Allowable Intake Restriction QSL and QSC 540 metric horse power and below

Clean Filter ..... 381 mm H_2O [15 in H_2O]

Dirty Filter..... 635 mm H_2O [25 in H_2O]

Maximum Air Cleaner Inlet Temperature Rise Over Ambient..... 17°C [30°F]

Maximum Allowable Intake Restriction QSC 550 metric horse power and above

Clean Filter..... 254 mm H_2O [10 in H_2O]

Dirty Filter..... 381 mm H_2O [15 in H_2O]

Maximum Air Cleaner Inlet Temperature Rise Over Ambient..... 17°C [30°F]

To buy Cummins Parts and Service Manuals, Training Guides, or Tools go to our website at https://store.cummins.com

Exhaust System

Specifications

Maximum Allowable Back Pressure
Hg.....76 mm-Hg [3 in-Hg]
Maximum Bending Moment at Turbine Outlet Mounting Flange
N•m..... 19 N•m [168 in-lb]
Maximum Increment Direct Load at Turbine Outlet Mounting Flange
N•m..... 9 kg [20 lb]
Marine Applications
Exhaust Restriction QSL9 Engines..... 10 kPa [3 in-Hg]
Exhaust Restriction QSC8.3 Engines built before July 1, 2008..... 10 kPa [3 in-Hg]
Exhaust Restriction QSC8.3 Engines built on or after July 1, 2008..... 17 kPa [5 in-Hg]

To buy Cummins Parts and Service Manuals, Training Guides, or Tools go to our website at https://store.cummins.com

Electrical System

Specifications

Minimum Recommended Battery Capacity:

System Voltage	Ambient Temperatures	
-	-18°C [0°F]	
-	Cold Cranking Amperes	Reserve Capacity* (Minutes)
Cold Cranking Amperes Rating (CCA) 12-VDC	1250	360
Cold Cranking Amperes Rating (CCA) 24-VDC**	625	180
Cold Cranking Amperes Rating (MCA) 12-VDC	1563	360
Cold Cranking Amperes Rating (MCA) 24-VDC**	781	180

* The number of plates within a given battery size determines reserve capacity. Reserve capacity is the length of time for which a battery at 27°C [80°F] can supply 25 amperes at 10.5 volts or greater.

** CCA and MCA ratings are based on two 12-VDC batteries in series.

Minimum Allowable System Voltage (at Battery While Running)
12-VDC..... 12 volts
24-VDC..... 24 volts
Minimum Allowable System Voltage (at Battery While Cranking)
12-VDC.....N/A
24-VDC.....N/A
Minimum Allowable System Voltage (at Battery While Running)
12-VDC..... 15.5 volts
24-VDC..... 31.0 volts
Maximum Allowable Voltage Drop of Starting Circuit (While Cranking)
12-VDC.....N/A
24-VDC.....N/A
Minimum Engine Cranking Torque
12-VDC.....N/A
24-VDC.....N/A
Minimum Break-away Engine Cranking Torque
12-VDC.....N/A
24-VDC.....N/A
Minimum Engine Cranking Speed
12-VDC.....150 rpm
24-VDC.....150 rpm
Minimum Engine (Running) Current Draw
12-VDC.....N/A
24-VDC.....N/A
Minimum Ambient Temperature for Cold Start (No Starting Aids) (QSC8.3 Engine)
12-VDC.....-7°C [20 psi]
24-VDC.....-7°C [20 psi]
Minimum Ambient Temperature for Cold Start (No Starting Aids) (QSL9 Engine)
12-VDC.....-12°C [10 psi]
24-VDC.....-12°C [10 psi]
Air Starter (Regulated Pressure for Air Starter System)
12-VDC.....N/A
24-VDC.....N/A
Air Starter (Minimum Air-Flow for Air Starter System)
12-VDC.....N/A
24-VDC.....N/A
Air Starter (Minimum Recommended Tank Volume)
12-VDC.....N/A
24-VDC.....N/A

To buy Cummins Parts and Service Manuals, Training Guides, or Tools go to our website at https://store.cummins.com

Batteries (Specific Gravity)

Specific Gravity at 27°C [80°F]	State of Charge
1.260 to 1.280	100 percent
1.230 to 1.250	75 percent
1.200 to 1.220	50 percent
1.170 to 1.190	25 percent
1.110 to 1.130	Discharged

To buy Cummins Parts and Service Manuals, Training Guides, or Tools go to our website at https://store.cummins.com

Filter Specifications

General Information

Cummins Filtration™ is a subsidiary of Cummins Inc. Cummins Filtration™ filters are developed through joint testing at Cummins Inc. and Cummins Filtration™. Cummins Filtration™ filters are standard on new Cummins® engines. Cummins Inc. recommends their use.

Cummins Filtration™ products meet all Cummins® Source Approval Test standards to provide the quality filtration necessary to achieve the engine's design life. If other brands are substituted, the purchaser should insist on products that the supplier has tested to meet Cummins® quality standards.

Cummins Inc. can **not** be responsible for problems caused by non-genuine filters that do **not** meet Cummins Inc. performance or durability requirements.

Filter Part Numbers (Marine Applications)			
-	**Water-separating Filter**	**Fuel Filter**	**Lubricating Oil Filter**
Cummins® Part Number	3971757	3959612	3401544
Racor® Part Number	1000MA	-	-
Cummins Filtration™ Part Number	-	FF5488	LF9009

NOTE: LF9009 **must** be used. A venturi type filter **must** be used in order to benefit from the bypass filtration section of the oil filter. Do **not** use LF3000. Engine durability will be reduced by the use of the wrong lubricating oil filter.

To buy Cummins Parts and Service Manuals, Training Guides, or Tools go to our website at https://store.cummins.com

Fuel Recommendations and Specifications

Fuel Recommendations

WARNING

Do not mix gasoline, alcohol, or gasohol with diesel fuel. This mixture can cause an explosion.

CAUTION

Due to the precise tolerances of diesel injection systems, it is extremely important that the fuel be kept clean and free of dirt or water. Dirt or water in the system can cause severe damage to both the fuel pump and the fuel injectors.

Cummins Inc. recommends the use of ASTM number 2D fuel. The use of number 2 diesel fuel will result in optimum engine performance.

At operating temperatures below 0°C [32°F], acceptable performance can be obtained by using blends of number 2D and number 1D.

NOTE: Lighter fuels can reduce fuel economy.

NOTE: Engines equipped with diesel particulate filters require the use of diesel fuel with 30 ppm sulfur maximum. There are no acceptable substitutes.

The viscosity of the fuel **must** be kept above 1.3 cSt at 40°C [104°F] to provide adequate pumping and lubricating characteristics to fuel system components.

The following chart lists acceptable substitute fuels for this engine.

Acceptable Substitute Fuels									
Number 1D Diesel(1) (2) (3)	**Number 2D Diesel(3)**	**Number 1K Kerosene**	**Jet-A**	**Jet-A1**	**JP-5**	**JP-8**	**Jet-B**	**JP-4**	**CITE**
A	OK	**Not** OK	A	A	A	A	**Not** OK	**Not** OK	**Not** OK
An "A" means OK **only** if fuel lubricity is adequate. This means the BOCLE number is 3100 or greater as measured by ASTM specification D6078, Scuffing Load Ball On Cylinder Evaluator (SLBOCLE). Lubricity can also be measured by ASTM, specification D6079, ISO 12156, High Frequency Reciprocating Rig (HFRR) in which the fuel **must** have a wear scar diameter of 0.45 mm [0.02 in] or less.									
Any adjustment to compensate for reduced performance with a fuel system using alternate fuel is **not** warrantable.									
Winter blend fuels, such as found at commercial fuel-dispensing outlets, are combinations of number 1D and 2D diesel fuels and are acceptable.									

Additional information for fuel recommendations and specifications can be found in Fuel for Cummins Engines, Bulletin 3379001. See ordering information in the back of this manual.

To buy Cummins Parts and Service Manuals, Training Guides, or Tools go to our website at https://store.cummins.com

Lubricating Oil Recommendations and Specifications

General Information

⚠CAUTION⚠

Extending the oil and filter change interval beyond the recommendations will decrease the engine life due to factors such as corrosion, deposits, and wear.

⚠CAUTION⚠

A sulfated ash limit of 1.85 percent has been placed on all engine lubricating oils recommended for use in Cummins® engines. Higher ash oils can cause valve and/or piston damage and lead to excessive oil consumption.

The use of quality engine lubricating oils, combined with appropriate oil drain and filter change intervals, is a critical factor in maintaining engine performance and durability. Extending the oil and filter change interval beyond the recommendations will decrease engine life due to factors such as corrosion, deposits, and wear. Reference Procedure 102-002 in Section 2 to determine which oil drain interval to use for the application.

Cummins Inc. recommends the use of high-quality Society of Automotive Engineers (SAE) 15W-40 heavy-duty engine oil, such as Valvoline™ Premium Blue™ (USA) or Valvoline™ Premium Blue™ Extra (International).

NOTE: The responsibility is with the owner. If recommendations are ignored, warranty could be affected.

API: American Petroleum Institue

CES: Cummins® Engineering Standard

ACEA - Association des Constructeurs European d' Association

JAMA - Japanese Automobile Manufacturerrs Association

Table 1: CES for Lubricants

CES	North American Classification	International Classifications	Comments
Obsolete. Do **not** use.	API CD API CE	ACEA E-1	Obsolete. Do **not** use.
	API CG-4/SH		
CES-20075[1]	API CF-4/SG	ACEA E-2	Minimum acceptable oil classification for MidRange engines, but is **not** recommended.
		ACEA E-3	
		JAMA DH-1	
CES-20071[2]	API CH-4 4/SJ	ACEA E5	Acceptable oil classification for MidRange engines.
CES-20076[2]			
CES-20077[2]			
CES-20078	API CI-4	ACEA E7	Excellent oil for MidRange engines.
CES-20081	API1 CJ-4	ACEA E9	Excellent oil for MidRange engines where ultra-low sulfur diesel fuel is used.[3]
		JAMA DH-2	

Table Notes

1. For MidRange engines, in areas where CH-4/SJ or CG-4/SH oils are **not** available, refer to the oil drain intervals in Section 2. As an alternative, oils meeting CES-20075 can be used, but the oil drain interval and filter change interval **must** be reduced by half.
2. Outside North America, where oil meeting CES-20071, CES-20076, or CES20077 might **not** be available, Cummins Inc. primary recommendation is for an oil meeting Global DHD-1, as jointly developed by EMA, ACEA, and JAMA.
3. Ultra-low sulfur diesel fuel is defined as diesel fuel **not** exceeding 0.0015 (15 ppm) mass percent sulfur content (ultra-low diesel fuel is also defined by ASTM S-15).

A sulfated ash limit of 1.0 mass percent is suggested for optimum valve and piston deposit and oil consumption control.

For further details and discussion of engine lubricating oils for Cummins® engines, refer to Cummins® Oil and Oil Analysis Recommendations, Bulletin 3810340.

To buy Cummins Parts and Service Manuals, Training Guides, or Tools go to our website at https://store.cummins.com

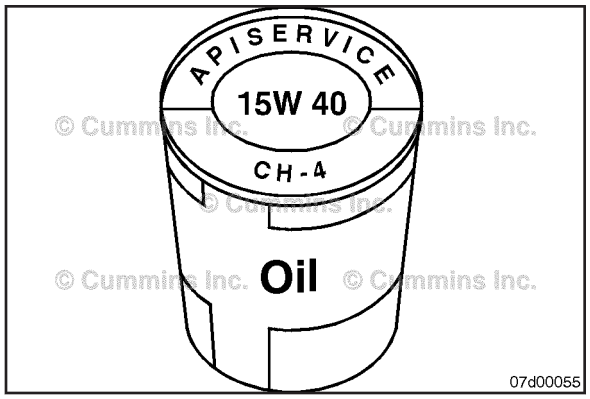

The API service symbols are shown in the accompanying illustration. The upper half of the symbols display the appropriate oil categories.

The lower half can contain words to describe oil energy-conserving features.

The center section identifies the SAE oil viscosity grade.

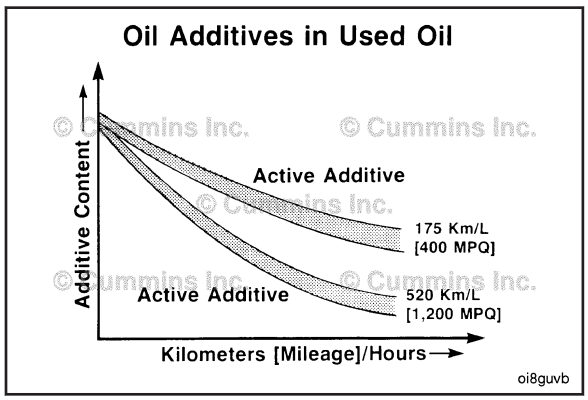

As the engine oil becomes contaminated, essential oil additives are depleted. Lubricating oils protect the engine as long as these additives are functioning properly. Progressive contamination of the oil between oil and filter change intervals is normal. The amount of contamination will vary, depending on the operation of the engine, kilometers or miles on the oil, fuel consumed, and new oil added.

Extending oil and filter change intervals beyond the recommendations will decrease engine life due to factors such as corrosion, deposits, and wear.

Reference the oil drain chart in this section to determine which oil drain interval to use for your application.

To buy Cummins Parts and Service Manuals, Training Guides, or Tools go to our website at https://store.cummins.com

The primary Cummins Inc. recommendation is for the use of 15W-40 multigrade lubricating oil for normal operation at ambient temperatures above -15°C [5°F]. The use of multigrade oil reduces deposit formation, improves engine cranking in low temperature conditions, and increases engine durability by maintaining lubrication during high temperature operating conditions. Since multigrade oils have been shown to provide approximately 30 percent lower oil consumption compared with monograde oils, it is important to use multigrade oils to be certain the engine will meet applicable emissions requirements.

Use of "synthetic engine oils" (those made with API group 3 or group 4 base stocks) is permitted, subject to the same performance and viscosity limitations of petroleum (mineral) based engine oils. The same oil change intervals that are applied to petroleum (mineral) based engine oils **must** be applied to synthetic oils.

For further details and discussion of engine lubricating oils for Cummins® engines, refer to the latest revision of Cummins® Engine Oil and Oil Analysis Recommendations, Bulletin 3810340.

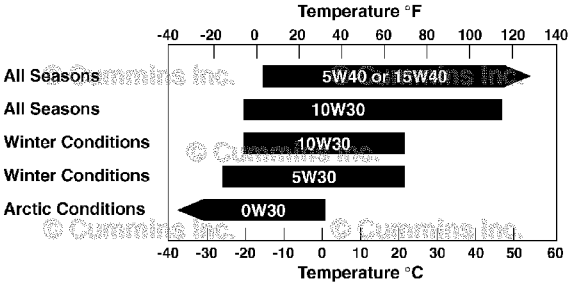

07d00260

While the preferred viscosity grade is 15W-40, lower viscosity multigrade oils can be used in colder climates. See the accompanying chart. Any viscosity grade lower than 15W-40 must still meet CES 20081.

Synthetic engine oils, API Group III and Group IV basestocks, are recommended for use in Cummins® engines operating in ambient temperature conditions consistently below -25°C [-13°F]. Synthetic 0W-30 oils that meet the requirements of API Group III or Group IV basestocks, can be used in operations where the ambient temperature never exceeds 0°C [32°F]. Multiviscosity oils rated 0W-30 do **not** offer the same level of protection against fuel dilution as do higher multigrade oils. Higher cylinder wear can be experienced when using 0W-30 oils in high-load situations.

As these oils have directionally thinner oil films than 15W-40 oils, top-quality Fleetguard® filters **must** be used above 20°C [70°F]. Some oil suppliers might claim better fuel economy for these oils. Cummins Inc. can neither approve nor disapprove any product **not** manufactured by Cummins Inc. These claims are between the customer and the oil supplier. Obtain a commitment from the oil supplier that the oil will give satisfactory performance in Cummins® engines, or do **not** use the oil.

New Engine Break-in Oils

Special “break-in” engine lubricating oils are **not** recommended for new or rebuilt Cummins® engines. Use the same type of oil during the break-in as is used in normal operation.

AfterMarket Oil Additive Usage

Cummins Inc. does **not** recommend the use of aftertreatment oil additives. Present high-quality fully additive engine lubricating oils are very sophisticated, with precise amounts of additives blended into the lubricating oil to meet stringent requirements. These oils meet performance characteristics that conform to the lubricant industry standards. Aftermarket lubricating oil additives are **not** necessary to enhance engine oil performance, and in some cases, can reduce the finished oil's ability to protect the engine.

To buy Cummins Parts and Service Manuals, Training Guides, or Tools go to our website at https://store.cummins.com

Coolant Recommendations and Specifications

General Information

This procedure describes coolant specifications and service requirements for engine coolant. For more exhaustive information on coolant specifications and service requirements for engine coolant. Refer to Fluids for Cummins® Products Service Manual, Bulletin 5411406.

Coolant Specifications

Cummins Inc. requires the use of a coolant meeting the appropriate Cummins® Engineering Standard (CES) for the engine. Table 1 below shows the approved CES for various engine models and applications of the engine.

A list of coolants that meet the appropriate CES for your engine can be obtained from a local Cummins® distributor or can be found on QuickServe® Online (QSOL) at:

NOTE: https://quickserve.cummins.com/qs3/qsol/service/serviceproducts/coolant_registration.html

Table 1, Cummins® Engineering Standards (CES) for Coolant

Engine Family	CES
Diesel ISV	CES 14636
Diesel 15 L Diesel 12 L, ISX12N, ISX12 G QSM11 and ISM11 On-road Diesel ISL Diesel QSB and ISB, B6.7N, B6.7G	CES 14603 CES 14439
All Other Engines	CES 14603

- For new equipment, check with the original equipment manufacturer (OEM) on the type of coolant used for the first fill. This will assist in understanding how to maintain the coolant properly.
- Cummins® recommends a premixed, heavy-duty coolant when filling the cooling system.
- See Fluids for Cummins® Products Service Manual, Bulletin 5411406. Refer to Procedure 379-005 in Section 5, if diluting coolant from concentrate.
- Customers with marine or arctic applications should reference Fluids for Cummins® Products Service Manual, Bulletin 5411406. Refer to Procedure 379-004 in Section 5 for information on coolant recommendations and specifications specific to those applications.

Coolant Service

Topping off the cooling system with an appropriate pre-diluted or 50/50 coolant is critical for maintaining additive concentrations and freeze protection. In general, different coolants should not be mixed. **Never** top off the cooling system with water **only**.

Coolant should be checked for: glycol concentration, SCA level and coolant replacement limits at different intervals depending on the type of coolant used. Table 2 below indicates minimum-required test intervals depending on coolant type:

Table 2, Test Intervals for Fleetguard® Coolants

Test	Conventional	Hybrid	OAT	Minimum Required Service Tool
Glycol[1]	Twice per year	Twice per year	Twice per year	CC2602
SCA Level[1]	Every lubricating oil drain	Shortest of: 241,401 km [150,000 miles], 4000 hours, or 1 year	**Not** required	CC2602
Coolant Replacement Limits Check	Shortest of: 241,401 km [150,000 miles], 4000 hours, or 1 year	Shortest of: 241,401 km [150,000 miles], 4000 hours, or 1 year	Shortest of: 482,803 km [300,000 miles], 6000 hours, or 1 year	CC2718

For a complete list of all applicable coolant testing tools, Refer to Fluids for Cummins ® Products Service Manual, Bulletin 5411406. Refer to Procedure 379-007 in Section 5.

Cummins® recommends targeting a glycol/antifreeze concentration of 50 percent by volume. Glycol concentration must be maintained according to Table 3.

To buy Cummins Parts and Service Manuals, Training Guides, or Tools go to our website at https://store.cummins.com

Table 3, Glycol Concentration	
Concentration Requirement	**Out of Range Actions**
40 to 60 Percent	Drain a portion of coolant and replace with 50/50 coolant to get back in the 40 to 60 percent glycol range. Under-concentration of glycol occurs when filling or topping off with straight water or over-diluted coolant. Over-concentration of glycol occurs in high heat situations where there is some water evaporation from the cooling system or when filling or topping off with improperly diluted coolant.

SCA **must** be maintained according to Table 4.

Table 4, Guidelines for SCA Addition	
SCA Concentration	**Recommendation**
Less than 0.3 units/L [1.2 units/U.S. gal]	Add 0.15 L [5 oz.] of liquid SCA per 3.8 L [1 U.S. gal] of coolant. Install the correct chemical coolant filter, if applicable. For large cooling systems, it may be necessary to use liquid SCA in conjunction with a chemical filter to replenish SCA.
0.3 units/L [1.2 units/U.S. gal] to 0.8 units/L [3.0 units/U.S. gal]	Install the correct chemical coolant filter or add the correct liquid SCA and install a chemical-free coolant filter.
Greater than 0.8 units/L [3.0 units/U.S. gal] to 1.3 units/L [5.0 units/U.S. gal]	Install the correct chemical-free coolant filter, if applicable. Do **not** add liquid SCA. Test the SCA level at each oil change until the SCA drops below 0.8 units/L [3.0 units/U.S. gal]. Drain and replace the coolant if overheating occurs or if cooling system corrosion is detected by visual changes to coolant's appearance or by laboratory testing.

Table 4 is only for customers using coolants with conventional / hybrid coolants that use SCA. Organic acid technology (OAT)/Extended Life coolants use high levels of salts of organic acids for cylinder liner pitting protection and do **not** use nitrite and or molybdate. Therefore, these coolants do **not** have SCA numbers. Additionally, OAT additives deplete much slower than conventional additives and as a result OAT coolants do **not** require addition of SCA products.

Replace the coolant **only** if the replacement limits are exceeded. Coolant replacement limits are listed in Table 5:

Table 5, Coolant Replacement Limits		
Contaminant	**Allowable Level**	**Out of Range Actions**
Sulfate (SO_4)	1500 ppm, maximum	Drain and replace with new coolant
Chloride (Cl-)+, Fluoride (F-)+, Bromide (Br-)	100 ppm, combined maximum	
Glycolate	3000 ppm, maximum	
pH	6.5 minimum / 10.5 maximum Note: Some Cummins® Engineering Standards approved coolants start at pH levels of 10.5 and will decrease naturally with time.	
Oil or fuel contamination	Coolant **must** be free of these contaminants	Drain, clean, and replace with new coolant. Refer to Procedure 379-009 in Section 5.
Grease, solder bloom, silica gel, rust, or scaling	Coolant **must** be free of these contaminants	

Refer to Procedure 379-007 in Section 5 for additional information on testing methods. Refer to Procedure 379-008 in Section 5 for more information on interpretation of test results.

NOTE: Dispose of used coolant or antifreeze in accordance with federal, state, and local laws and regulations.

Cummins® recommends the use of Fleetguard® coolants.

To buy Cummins Parts and Service Manuals, Training Guides, or Tools go to our website at https://store.cummins.com

Coolant Filter

Coolant filters are optional on all Cummins® equipment. Most Cummins® engines built prior to January 1, 2013 were manufactured with a coolant filter head. Use of a coolant filter is recommended, especially in applications where cleanliness may be an issue. If desired, an aftermarket engine coolant filter head from Cummins Filtration™ can be easily installed on most engines.

Several types of coolant filters are available for use on Cummins® engines. The choice of coolant filter type will depend on choice of coolant formulation and choice of service interval. If coolants capable of an extended service interval are used, an extended service interval coolant filter **must** also be used.

Chemical Filters

Some coolant filters contain additives for Supplemental Coolant Additive (SCA) replenishment. These filters, usually referred to as chemical filters, should **only** be used with conventional and hybrid coolants that require SCA replenishment.

Chemical-Free Filters

OAT coolants do **not** require SCA replenishment and **must** use chemical-free coolant filters.

To buy Cummins Parts and Service Manuals, Training Guides, or Tools go to our website at https://store.cummins.com

Drive Belt Tension

Tension Chart

SAE Belt Size	Belt Tension Gauge Part No.		Belt Tension New		Belt Tension Range Used*	
	Click-type	Burroughs	N	lbf	N	lbf
0.380 in	3822524		620	140	270 to 490	60 to 110
0.440 in	3822524		620	140	270 to 490	60 to 110
1/2 in	3822524	ST-1138	620	140	270 to 490	60 to 110
11/16 in	3822524	ST-1138	620	140	270 to 490	60 to 110
3/4 in	3822524	ST-1138	620	140	270 to 490	60 to 110
7/8 in	3822524	ST-1138	620	140	270 to 490	60 to 110
4 rib	3822524	ST-1138	620	140	270 to 490	60 to 110
5 rib	3822524	ST-1138	670	150	270 to 530	60 to 120
6 rib	3822525	ST-1293	710	160	290 to 580	65 to 130
8 rib	3822525	ST-1293	890	200	360 to 710	80 to 160
10 rib	3822525	3823138	1110	250	440 to 890	100 to 200
12 rib	3822525	3823138	1330	300	530 to 1070	120 to 240
12 rib K section	3822525	3823138	1330	300	890 to 1070	200 to 240
31 rib	-	3164750	1668	375	1330 to 1560	300 to 350

NOTE: This chart does not apply to automatic belt tensioners.

* A belt is considered used if it has been in service for ten minutes or longer.

* If used belt tension is less than the minimum value, tighten the belt to the maximum used belt value.

To buy Cummins Parts and Service Manuals, Training Guides, or Tools go to our website at https://store.cummins.com

Engine Component Torque Values

Torque Table

Component	Torque Value	
	N•m	ft-lb
Alternator Link at Alternator	44	32
Alternator Link at Base Engine	24	18
Alternator Mounting Bolt	77	57
Belt Tensioner Mounting	43	32
Crankshaft Damper and Pulley	200	148
Crossover Clamp	5	44 in-lb
Tee Bolt Type Clamp	8	71 in-lb
Exhaust Outlet Pipe, V Band Clamp	8	71 in-lb
Fuel Filter	Refer to Manufacturer's Specifications	
Lubricating Oil Filter	Refer to Manufacturer's Specifications	
Lubricating Oil Pan Drain Plug		
Steel Oil Pan	80	59
Cast Aluminum Oil Pan	60	44
Composite Oil Pan	60	44
Starting Motor Mounting	43	32
Rocker Lever Cover	12	106 in-lb

To buy Cummins Parts and Service Manuals, Training Guides, or Tools go to our website at https://store.cummins.com

Sealants

General Information

Use the sealants listed below or sealants containing equivalent properties unless specified otherwise in a procedure or step.

Item Description	Sealing Method
Pipe Plugs	Precoated teflon or pipe sealer
Cup Plugs	Loctite® 277 or 11,264
O-Rings	Lubriplate™ 105
Rear Camshaft Expansion Plug	Precoated or Loctite® 59,241 liquid teflon
Fuel Block Mounting Studs	Loctite® 609
Turbocharger Drain in Block	Loctite® 277 or 11,264
Front Seal in Gear Cover	Loctite® 277 or 11,264
Rear Seal in Rear Cover	No sealant
Oil Pan at T-Joint	ThreeBond® 1207C (Cummins® Part Number 3823494)

To buy Cummins Parts and Service Manuals, Training Guides, or Tools go to our website at https://store.cummins.com

Capscrew Markings and Torque Values

General Information

CAUTION

When replacing capscrews, always use a capscrew of the same measurement and strength as the capscrew being replaced. Using the wrong capscrews can result in engine damage.

Metric capscrews and nuts are identified by the grade number stamped on the head of the capscrew or on the surface of the nuts. U.S. Customary capscrews are identified by radial lines stamped on the head of the capscrew.

The following examples indicate how capscrews are identified:

Metric - M8-1.25 X 25

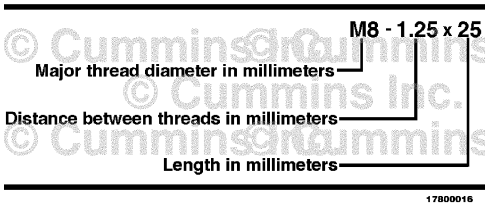

- **Always** use the torque values listed in the following tables when specific torque values are **not** available.
- Do **not** use the torque values in place of those specified in other sections of this manual.
- The torque values in the table are based on the use of lubricated threads.

U.S. Customary [5/16 X 18 X 1-1/2]

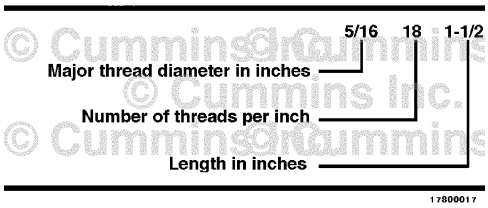

- **Always** use the torque values listed in the following tables when specific torque values are **not** available.
- Do **not** use the torque values in place of those specified in other sections of this manual.
- The torque values in the table are based on the use of lubricated threads.

Capscrew Markings and Torque Values - Metric

Commercial Steel Class

8.8 **10.9** **12.9**

Capscrew Head Markings

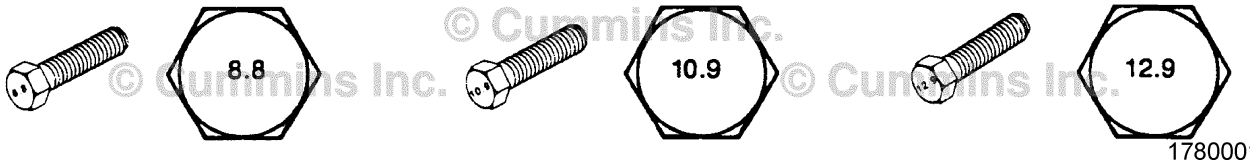

17800014

Capscrew Grade	8.8				10.9				12.9			
Material	Cast Iron		Aluminum		Cast Iron		Aluminum		Cast Iron		Aluminum	
Capscrew Body Diameter [mm]	Torque [N•m]	Torque [ft-lb]	Torque [N•m]	Torque [ft-lb]	Torque [N•m]	Torque [ft-lb]	Torque [N•m]	Torque [ft-lb]	Torque [N•m]	Torque [ft-lb]	Torque [N•m]	Torque [ft-lb]
6	9	5	7	4	13	10	7	4	14	9	7	4

To buy Cummins Parts and Service Manuals, Training Guides, or Tools go to our website at https://store.cummins.com

Capscrew Grade	8.8				10.9				12.9			
Material	Cast Iron		Aluminum		Cast Iron		Aluminum		Cast Iron		Aluminum	
Capscrew Body Diameter [mm]	Torque [N•m]	Torque [ft-lb]	Torque [N•m]	Torque [ft-lb]	Torque [N•m]	Torque [ft-lb]	Torque [N•m]	Torque [ft-lb]	Torque [N•m]	Torque [ft-lb]	Torque [N•m]	Torque [ft-lb]
7	14	9	11	7	18	14	11	7	23	18	11	7
8	23	17	18	14	33	25	18	14	40	29	18	14
10	45	33	30	25	65	50	30	25	70	50	30	25
12	80	60	55	40	115	85	55	40	125	95	55	40
14	125	90	90	65	180	133	90	65	195	145	90	65
16	195	140	140	100	280	200	140	100	290	210	140	100
18	280	200	180	135	390	285	180	135	400	290	180	135
20	400	290	—	—	550	400	—	—	—	—	—	—

Capscrew Markings and Torque Values - U.S. Customary

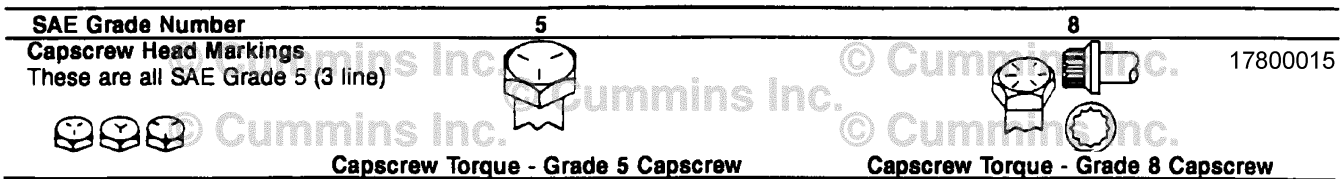

Capscrew Grade	5				8			
Material	Cast Iron		Aluminum		Cast Iron		Aluminum	
Capscrew Body Diameter [in] and T.P.I.	Torque [N•m]	Torque [ft-lb]	Torque [N•m]	Torque [ft-lb]	Torque [N•m]	Torque [ft-lb]	Torque [N•m]	Torque [ft-lb]
1/4 - 20	9	7	8	6	15	11	8	6
1/4 - 28	12	9	9	7	18	13	9	7
5/16 - 18	20	15	16	12	30	22	16	12
5/16 - 24	23	17	19	14	33	24	19	14
3/8 - 16	40	30	25	20	55	40	25	20
3/8 - 24	40	30	35	25	60	45	35	25
7/16 - 14	60	45	45	35	90	65	45	35
7/16 - 20	65	50	55	40	95	70	55	40
1/2 - 13	95	70	75	55	130	95	75	55
1/2 - 20	100	75	80	60	150	110	80	60
9/16 - 12	135	100	110	80	190	140	110	80
9/16 - 18	150	110	115	85	210	155	115	85
5/8 - 11	180	135	150	110	255	190	150	110
5/8 - 18	210	155	160	120	290	215	160	120
3/4 - 10	325	240	255	190	460	340	255	190
3/4 - 16	365	270	285	210	515	380	285	210
7/8 - 9	490	360	380	280	745	550	380	280
7/8 - 14	530	390	420	310	825	610	420	310

To buy Cummins Parts and Service Manuals, Training Guides, or Tools go to our website at https://store.cummins.com

Capscrew Grade	5				8			
Material	Cast Iron		Aluminum		Cast Iron		Aluminum	
Capscrew Body Diameter [in] and T.P.I.	Torque [N•m]	Torque [ft-lb]	Torque [N•m]	Torque [ft-lb]	Torque [N•m]	Torque [ft-lb]	Torque [N•m]	Torque [ft-lb]
1 - 8	720	530	570	420	1100	820	570	420
1 - 14	800	590	650	480	1200	890	650	480

To buy Cummins Parts and Service Manuals, Training Guides, or Tools go to our website at https://store.cummins.com

Fraction, Decimal, Millimeter Conversions

Conversion Chart

Fraction	inch	mm	Fraction	inch	mm
1/64	0.0156	0.397	33/64	0.5156	13.097
1/32	0.0313	0.794	17/32	0.5313	13.494
3/64	0.0469	1.191	35/64	0.5469	13.891
1/16	0.0625	1.588	9/16	0.5625	14.288
5/64	0.0781	1.984	37/64	0.5781	14.684
3/32	0.0938	2.381	19/32	0.5938	15.081
7/64	0.1094	2.778	39/64	0.6094	15.478
1/8	0.1250	3.175	5/8	0.6250	15.875
9/64	0.1406	3.572	41/64	0.6406	16.272
5/32	0.1563	3.969	21/32	0.6563	16.669
11/64	0.1719	4.366	43/64	0.6719	17.066
3/16	0.1875	4.763	11/16	0.6875	17.463
13/64	0.2031	5.159	45/64	0.7031	17.859
7/32	0.2188	5.556	23/32	0.7188	18.256
15/64	0.2344	5.953	47/64	0.7344	18.653
1/4	0.2500	6.350	3/4	0.7500	19.050
17/64	0.2656	6.747	49/64	0.7656	19.447
9/32	0.2813	7.144	25/32	0.7813	19.844
19/64	0.2969	7.541	51/64	0.7969	20.241
5/16	0.3125	7.938	13/16	0.8125	20.638
21/64	0.3281	8.334	53/64	0.8281	21.034
11/32	0.3438	8.731	27/32	0.8438	21.431
23/64	0.3594	9.128	55/64	0.8594	21.828
3/8	0.3750	9.525	7/8	0.8750	22.225
25/64	0.3906	9.922	57/64	0.8906	22.622
13/32	0.4063	10.319	29/32	0.9063	23.019
27/64	0.4219	10.716	59/64	0.9219	23.416
7/16	0.4375	11.113	15/16	0.9375	23.813
29/64	0.4531	11.509	61/64	0.9531	24.209
15/32	0.4688	11.906	31/32	0.9688	24.606
31/64	0.4844	12.303	63/64	0.9844	25.003
1/2	0.5000	12.700	1	1.0000	25.400

Conversion Factor: 1 inch = 25.4 mm

To buy Cummins Parts and Service Manuals, Training Guides, or Tools go to our website at https://store.cummins.com

Newton-Meter to Foot-Pound Conversions

Conversion Chart

N•m	ft-lb	N•m	ft-lb	N•m	ft-lb
1	9 in-lb	55	41	155	114
5	44 in-lb	60	44	160	118
6	53 in-lb	65	48	165	122
7	62 in-lb	70	52	170	125
8	71 in-lb	75	55	175	129
9	80 in-lb	80	59	180	133
10	89 in-lb	85	63	185	136
11	97 in-lb	90	66	190	140
12	106 in-lb	95	70	195	144
14	124 in-lb	100	74	200	148
15	133 in-lb	105	77	205	151
16	142 in-lb	110	81	210	155
18	159 in-lb	115	85	215	159
20	15 ft-lb	120	89	220	162
25	18	125	92	225	165
30	22	130	96	230	170
35	26	135	100	235	173
40	30	140	103	240	177
45	33	145	107	245	180
50	37	150	111	250	184
NOTE: To convert from Newton-Meters to Kilogram-Meters divide Newton-Meters by 9.803.					

To buy Cummins Parts and Service Manuals, Training Guides, or Tools go to our website at https://store.cummins.com

Pipe Plug Torque Values

Torque Table

Size		Torque		Torque	
Thread	Actual Thread O.D.	In Aluminum Components		In Cast Iron or Steel Components	
in	**in**	**N•m**	**ft-lb**	**N•m**	**ft-lb**
1/16	0.32	5	45 in-lb	15	10
1/8	0.41	15	10	20	15
1/4	0.54	20	15	25	20
3/8	0.68	25	20	35	25
1/2	0.85	35	25	55	40
3/4	1.05	45	35	75	55
1	1.32	60	45	95	70
1-1/4	1.66	75	55	115	85
1-1/2	1.90	85	65	135	100

To buy Cummins Parts and Service Manuals, Training Guides, or Tools go to our website at https://store.cummins.com

Tap-Drill Chart - U.S. Customary and Metric

General Information

NOTE ON SELECTING TAP-DRILL SIZES: The tap drill sizes shown on this card give the theoretical tap drill size for approximately 60% and 75% of full thread depth. Generally, it is recommended that drill sizes be selected in the 60% range as these sizes will provide about 90% of the potential holding power. Drill sizes in the 75% range are recommended for shallow hole tapping (less than 1 1/2 times the hole diameter) in soft metals and mild steel.

Tap Size 60%	Tap Size 75%	Drill Size
		48
		1.95mm
		5/64
	3-48	47
		2.00mm
	M2.5x.45	2.05mm
		46
3-48	3056	45
		2.10mm
M2.5x.45	M2.6x.45	2.15mm
3-56	4-36	44
		2.20mm
M2.6x.45		2.25mm
4-36	4-40	43
		2.30mm
		2.35mm
4-40	4-48	42
		3/32
	M3x.6	2.40mm
4-48		41
		2.45mm
		40
M3x.6	M3x.5	2.50mm
		39
	5-40	38
M3x.5		2.60mm
5-40	5-44	37
		2.70mm
5-44	6-32	36
		2.75mm
		7/64
		35
		2.80mm
		34
6-32	6-40	33
	M3.5x6	2.90mm
		32
M3.5x6		3.00mm
6-40		31
		3.10mm
		1/8
		3.20mm
	M4x.75	3.25mm
		30
	M4x.7	3.30mm
M4x.75		3.40mm
M4x.7	8-32	29
		3.50mm
	8-36	28
8-32		9/64
		3.60mm
8-36		27
		3.70mm
		26
	M4.5x.75	3.75mm
	10-24	25
		3.80mm
		24
M4.5x.75		3.90mm
		23
		5/32
10-24		22
	M5x1	4.00mm
	10-32	21
		20
	M5x.9	4.10mm
M5x1	M5x.8	4.20mm
10-32		19
M5x.9		4.25mm
M5x.8		4.30mm
		18
		11/64
		17

Tap Size 60%	Tap Size 75%	Drill Size
		4.40mm
	12-24	16
		4.50mm
		15
	M5.5x.9	4.60mm
12-24	12-28	14
		13
		4.70mm
M5.5x.9		4.75mm
12-28		3/16
		12
		4.80mm
		11
		4.90mm
		10
		9
	M6x1	5.00mm
		8
		5.10mm
	1/4-20	7
		13/64
		6
M6x1		5.20mm
		5
	M6x.75	5.25mm
		5.30mm
1/4-20		4
M6x.75		5.40mm
	1/4-28	3
		5.50mm
		7/32
		5.60mm
1/4-28		2
		5.70mm
		5.75mm
		1
		5.80mm
		5.90mm
		A
		15/64
	M7x1	6.00mm
		B
		6.10mm
		C
M7x1		6.20mm
		D
	M7x.75	6.25mm
		6.30mm
		E
		1/4
M7x.75		6.40mm
		6.50mm
	5/16-18	F
		6.60mm
		G
		6.70mm
		17/64
	M8x1.25	6.75mm
5/16-18		H
		6.80mm
		6.90mm
	5.16-24	I
M8x1.25	M8x1	7.00mm
		J
		7.10mm
5/16-24		K
		9/32
M8x1		7.20mm
		7.25mm
		7.30mm
		L
		7.40mm
		M

Tap Size 60%	Tap Size 75%	Drill Size
		7.50mm
		19/64
		7.60mm
		N
		7.70mm
	M9x1.25	7.75mm
		7.80mm
		7.90mm
	3/8-16	5/16
M9x1.25	M9x1	8.00mm
		O
		8.10mm
M9x1		8.20mm
		P
		8.25mm
		8.30mm
3/8-16	1/8-27NPT	21/64
		8.40mm
	3/8-24	Q
	M10x1.5	8.50mm
		8.60mm
		R
3/8-24		8.70mm
1/8-27NPT		11/32
	M10x1.25	8.75mm
M10x1.5		8.80mm
		S
		8.90mm
M10x1.25	M10x1	9.00mm
		T
		9.10mm
		23/64
M10x1		9.20mm
		9.30mm
	7/16-14	U
		9.40mm
	M11x1.5	9.50mm
		3/8
		V
		9.60mm
		9.70mm
		9.75mm
M11x1.5		9.80mm
7/16-14		W
		9.90mm
	7/16-20	25/64
		10.00mm
7/16-20		X
	M12x1.75	10.20mm
		Y
		13/32
		Z
M12x1.75	M12x1.5	10.50mm
	1/2-13	27/64
M12x1.5	M12x1.25	10.75mm
M12x1.25		11.00mm
1/2-13		7/16
1/4-18NPT		
		11.25mm
		11.50mm
		29/64
		11.75mm
		11.50mm
	1/2-20	29/64
	9/16-12	15/32
	M14x2	12.00m
		12.25mm
9/16-12		31/64
M14x2	M14x1.5	12.50mm
	9/16-18	1/2
M14x1.5	M14x1.25	12.75mm
M14x1.25		13.00mm
9/16-18		33/64

Tap Size 60%	Tap Size 75%	Drill Size
		13.25mm
	5/8-11	17/32
	M15x1.5	13.50mm
M15x1.5		13.75mm
5/8-11		35/64
	M16x2	14.00mm
		14.25mm
	5/8-18	9/16
M16x2	M16x1.5	14.50mm
5/8-18		37/64
		14.75mm
M16x1.5		15.00mm
		19.32
		15.25mm
		39/64
	M17x1.5	15.50mm
M17x1.5	M18x2.5	15.75mm
		5/8
M18x2.5	M18x2	16.00mm
M18x2		16.25mm
	3/4-10	41/64
	M18x1.5	16.50mm
3/4-10	M19x2.5	21/32
M18x1.5		16.75mm
M19x2.5		17.00mm
		43/64
		17.25mm
3/4-16	3/4-16	11/16
	M20x2.5	17.50mm
		17.75mm
		45/64
M20x2.5	M20x2	18.00mm
M20x2		18.25mm
		23/32
	M20x1.5	18.50mm
		47/64
M20x1.5		18.75mm
		19.00mm
		3/4
		19.25mm
	7/8-9	49/64
	M22x2.5	19.50mm
7/8-9		25/32
		19.75mm
M22x2.5	M22x2	20.00mm
	7/8-14	51/64
M22x2		20.25mm
	M22x1.5	20.50mm
7/8-14		13/16
		20.75mm
M22x1.5	M24x3	21.00mm
		53/64
		21/25mm
		27/32
M24x3		21.50mm
		21.75mm
		55/64
	M24x2	22.00mm
	1"-8	7/8
M24x2		22.25mm
	M24x1.5	22.50mm
1"-8		57/64
M24x1.5		22.75mm
	M25x2	23.00mm
	1"-12	29/32
M25x2		23.25mm
1"x12	1"-14	59/64
	M25x1.5	23.50mm
M20x1.5		23.75mm
1"-14		15/16

17800013

© Cummins Inc.

Weights and Measures - Conversion Factors

Conversion Chart

Quantity	U.S. Customary		Metric		From U.S. Customary To Metric Multiply By	From Metric To U.S. Customary Multiply By
	Unit Name	Abbreviation	Unit Name	Abbreviation		
Area	sq. inch	in^2	sq. millimeters	mm^2	645.16	0.001550
			sq. centimeters	cm^2	6.452	0.155
	sq. foot	ft^2	sq. meter	m^2	0.0929	10.764
Fuel Consumption	pounds per horsepower hour	lb/hp-hr	grams per kilowatt hour	g/kW-hr	608.277	0.001645
Fuel Performance	miles per gallon	mpg	kilometers per liter	km/l	0.4251	2.352
	gallons per mile	gpm	liters per kilometer	l/km	2.352	0.4251
Force	pounds force	lbf	Newton	N	4.4482	0.224809
Length	inch	in	millimeters	mm	25.40	0.039370
	foot	ft	millimeters	mm	304.801	0.00328
Power	horsepower	hp	kilowatt	kW	0.746	1.341
Pressure	pounds force per sq. inch	psi	kilopascal	kPa	6.8948	0.145037
	inches of mercury	in Hg	kilopascal	kPa	3.3769	0.29613
	inches of water	in H_2O	kilopascal	kPa	0.2488	4.019299
	inches of mercury	in Hg	millimeters of mercury	mm Hg	25.40	0.039370
	inches of water	in H_2O	millimeters of water	mm H_2O	25.40	0.039370
	bars	bars	kilopascals	kPa	100.001	0.00999
	bars	bars	millimeters of mercury	mm Hg	750.06	0.001333
Temperature	fahrenheit	°F	centigrade	°C	(°F-32) ÷1.8	(1.8 x °C) +32
Torque	pound force per foot	ft-lb	Newton-meter	N•m	1.35582	0.737562
	pound force per inch	in-lb	Newton-meter	N•m	0.113	8.850756
Velocity	miles/hour	mph	kilometers/hour	kph	1.6093	0.6214
Volume: liquid displacement	gallon (U.S.)	gal.	liter	l	3.7853	0.264179
	gallon (Imp*)	gal.	liter	l	4.546	0.219976
	cubic inch	in^3	liter	l	0.01639	61.02545
	cubic inch	in^3	cubic centimeter	cm^3	16.387	0.06102
Weight (mass)	pounds (avoir.)	lb	kilograms	kg	0.4536	2.204623
Work	British Thermal Unit	BTU	joules	J	1054.5	0.000948
	British Thermal Unit	BTU	kilowatt-hour	kW-hr	0.000293	3414
	horsepower hours	hp-hr	kilowatt-hour	kW-hr	0.746	1.341

To buy Cummins Parts and Service Manuals, Training Guides, or Tools go to our website at https://store.cummins.com

Notes

Section W - Warranty

Section Contents

Page
CMD Quantum Commercial Marine Propulsion (QSB5.9/QSB6.7/QSC8.3/QSL9/QSM11/SDI/TDI) W-1
Cummins Recreational Marine Propulsion (QSB5.9/QSB6.7/QSC8.3/QSL9/QSM11/X15) W-5

To buy Cummins Parts and Service Manuals, Training Guides, or Tools go to our website at https://store.cummins.com

This Page Left Intentionally Blank

CMD Quantum Commercial Marine Propulsion (QSB5.9/QSB6.7/QSC8.3/QSL9/QSM11/SDI/TDI)

Coverage

Engines Included in this Coverage

Marine Propulsion

QSB5.9/QSB6.7/QSC8.3/QSL9/QSM11/SDI/TDI

Products Warranted

This Warranty applies to new Product sold by Cummins MerCruiser Diesel, herein after “CMD”, that is branded as Cummins MerCruiser Diesel product and used in Commercial and Government Marine Propulsion applications anywhere in the world as permitted by US ITAR and Export Compliance regulations where CMD approved service is available* and delivered to the first user on or after May 1, 2011.

This Warranty covers any failures of the Product, under normal use and service, which results from a defect in CMD material or workmanship (Warrantable Failure). The (Product) includes the Engine, controls and other components other than pods or sterndrives as delivered from the CMD factory and accessories with a CMD part number that are added by a CMD approved distributor or OEM. Pods and sterndrives are covered under a separate CMD Warranty.

COMMERCIAL USE

Commercial use is defined as any work or employment related use of the product, or any use of the product which generates income, or any part of the warranty period, even if the product is only occasionally used for such purposes.

GOVERNMENT USE

Government use is defined as use by Federal, State, and Local agencies in non-revenue producing applications.

MARINE PROPULSION RATINGS

Government Service (GS) Rating

Intended for use in variable load applications where full power is limited to one hour out of every eight hours of operation.

Reduced power operation must be at or below cruise speed (rpm). Cruise speed (rpm) is dependent on the engine rated speed (rpm):

Rated Speed (rpm)	Cruise Speed (Reduction from rated speed, rpm)
2,000 to 2,800 rpm	200 rpm below rated
2,801 to 3,500 rpm	300 rpm below rated
3,501 to 4,500 rpm	400 rpm below rated

Government Service (GS)

The Government Service Rating applies to Government use in variable load applications where annual use is less than 500 hours and full power is one (1) out of every eight (8) hours of operation. Reduced power operation must be at or below cruise speed.

Light Commercial (LC)

The Light Commercial Rating applies to Commercial use in variable load applications where annual use is less than 500 hours and full power is one (1) out of every eight (8) hours of operation. Reduced power operation must be at or below cruise speed.

Intermittent Duty (ID)

This power rating is intended for intermittent use in variable load applications where full power is limited to two hours out of every eight hours of operation. Also, reduced power operations must be at or below 200 rpm of the maximum rated rpm. This rating is an ISO3046 Fuel Stop Power Rating and is for applications that operate less than 1,500 hours per year.

Medium Duty (MD)

This power rating is intended for continuous use in variable load applications where full power is limited to six hours out of every twelve hours of operation. Also, reduced power operations must be at or below 200 rpm of the maximum rated rpm. This rating is an ISO3046 Fuel Stop Power Rating and is for applications that operate less than 3,000 hours per year.

Heavy Duty (HD)

This power rating is intended for continuous use in variable load applications where full power is limited to eight hours out of every ten hours of operation. Also, reduced power must be at least 200 rpm below the maximum rated rpm. This rating is an ISO3046 Fuel Stop Power Rating and is for applications that operate less than 5,000 hours per year.

Continuous Duty (CD)

This power rating is intended for continuous use in applications requiring uninterrupted service at full power. This rating is an ISO3046 Standard Power Rating.

To buy Cummins Parts and Service Manuals, Training Guides, or Tools go to our website at https://store.cummins.com

Base Engine Warranty

This warranty covers any failures of the Product, under normal use and service, which result from a defect in CMD material or factory workmanship (Warrantable Failure). Coverage begins with the sale of the Engine by CMD and continues for the Duration stated in the following table. The Duration commences on either the date of delivery of the Product to the first end-user, or the date the unit is first leased, rented or loaned, or when the Product has been operated for 50 hours, whichever occurs first. The Base Coverage duration ends two (2) years after the in-service date or allowed hours of total operation, whichever occurs first.

Warranty Coverage Periods				
Rating	**QSB, QSC, QSL, SDI, TDI**		**QSM11**	
	Coverage ends at whichever occurs first, months or hours of usage.		Coverage ends at whichever occurs first, months or hours of usage.	
	Months	Hours	Months	Hours
Government Service (GS)	24	1,000	24	1,000
Light Commercial (LC)	24	1,000	NA	NA
Intermittent Duty (ID)	24	3,000	24	3,000
Medium Duty (MD)	24	5,000	24	6,000
Heavy Duty (HD)	24	5,500	24	8,000
Continuous Duty (CD)	24	6,500	24	9,000

Cummins MerCruiser Diesel Responsibilities

During Engine Warranty

CMD will pay for all parts and labor needed to repair the damage to the Product resulting from a Warrantable Failure when performed during normal business hours. All labor costs will be paid in accordance with Cummins published Standard Repair Time guidelines.

When it is necessary for mechanics to make on-site warranty repairs CMD will pay reasonable travel expenses, including meals, mileage and lodging, for mechanics to travel to and from the repair dock. Labor must be performed by an authorized CMD Repair Facility.

CMD will pay for the lubricating oil, antifreeze, filter elements, and other maintenance items that are not reusable due to the Warrantable Failure.

CMD will pay for reasonable labor costs for Engine removal and reinstallation when necessary to repair a Warrantable Failure.

Owner Responsibilities

During the Engine Warranty

Owner is responsible for the operation and maintenance of the Product as specified in the applicable CMD Operation and Maintenance Manual. Owner is also responsible for providing proof that all recommended maintenance has been performed. This warranty does not cover normal wear and tear of covered parts. Exceeding the operational parameters of the rating will void this Warranty. The Owner of the boat is ultimately responsible for ensuring the Engine is properly operated and maintained. The Warranty will be void on any Engines that are misapplied, not maintained properly or misused.

Before the expiration of the applicable warranty, Owner must notify a CMD service provider, distributor, authorized dealer, or other repair location approved by CMD of any Warrantable Failure and make the Engine available for repair by such facility. Locations in the United States and Canada are listed in the Cummins U.S. and Canada Sales and Service Directory; other locations are listed in the CMD International Sales and Service Directory.

Owner is responsible for the cost of lubricating oil, antifreeze, filter elements, and other maintenance items replaced during warranty repairs unless such items are not reusable due to the Warrantable Failure.

Owner is responsible for communication expenses, meals, lodging, and similar costs incurred as a result of a Warrantable Failure.

To buy Cummins Parts and Service Manuals, Training Guides, or Tools go to our website at https://store.cummins.com

Owner is responsible for non-Engine repairs, “downtime” expenses, cargo damage, fines, all applicable taxes, all business costs, and other losses resulting from a Warrantable Failure.

In the event of any Product failure, Owner is responsible for the cost of towing the boat to the repair dock and for all associated docking and harbor charges.

Owner is responsible for maintaining the Engine hourmeter in good working order at all times and to ensure that the hourmeter accurately reflects the total hours of operation of the Product.

Owner is responsible for the costs to investigate complaints, unless the problem is caused by a defect in CMD material or factory workmanship.

Limitations

1. Maintenance Component Limitations

CMD will replace certain maintenance components if they fail within 90 days or less after the base coverage starts. Maintenance components include but are not limited to: sea water pump impellers, zinc plugs, oil filters, fuel filters, air filters, water filters, fuel/water separator filters, expansion tank pressure caps, belts, hoses.

2. Other Component Limitations

CMD does not warrant components that are not supplied by CMD factory.

3. CMD supplied alternators and starters limitation

Warranty coverage is limited to 2 years or 2,000 hours, whichever expires first for rating other than Government Service.

Warranty coverage is limited to 2 years or 1,000 hours, whichever expires first for the Government Service rating.

Consumer Products

The warranty on Consumer Products in the United States is a limited warranty. **CMD IS NOT RESPONSIBLE FOR INCIDENTAL OR CONSEQUENTIAL DAMAGES.** Any implied warranties applicable to Consumer Products terminate concurrently with the expiration of the express warranties applicable to the Product. In the United States, some states do not allow the exclusion of incidental or consequential damages, or limitations on how long an implied warranty lasts, so the above limitations or exclusions may not apply to you.

CMD is not responsible for failures or damage resulting from what CMD determines to be abuse or neglect, including, but not limited to: operation without adequate coolants or lubricants; overfueling; overspeeding; lack of maintenance of cooling, lubricating or intake systems; improper storage, starting, warm-up, run-in or shutdown practices; unauthorized modifications to the engine; improper propping that does not allow the engine to run at its maximum rated speed; submersion, freezing temperatures, improper service, removal of parts, or running the engine out of water; water ingestion, unless caused by a Warrantable failure. CMD is also not responsible for failures caused by incorrect oil or fuel or by water, dirt or other contaminants in the fuel or oil.

Before a claim for excessive oil consumption will be considered, Owner must submit adequate documentation to show that oil consumption exceeds CMD published standards.

CMD is not responsible for failures of maintenance components supplied by CMD beyond 90 days after the coverage duration start date. Maintenance components include, but are not limited to: sea water pump impellers; zinc plugs; oil filters; fuel filters; air filters; water filters; fuel/water separator filters.

Parts used in warranty repairs may be new CMD parts, CMD approved rebuilt parts, or repaired parts. CMD is not responsible for failures resulting from the use of parts not supplied by CMD.

A new CMD or CMD approved rebuilt part used to replace a Warranted Part assumes the identity of the Warranted Part it replaced and is entitled to the remaining coverage hereunder.

CMD DOES NOT COVER WEAR OR WEAROUT OF COVERED PARTS.

CMD IS NOT RESPONSIBLE FOR INCIDENTAL OR CONSEQUENTIAL DAMAGES.

THESE WARRANTIES SET FORTH HEREIN ARE THE SOLE WARRANTIES MADE BY CMD IN REGARD TO THESE ENGINES. CMD MAKES NO OTHER WARRANTIES, EXPRESS OR IMPLIED, OR OF MERCHANTABILITY OR FITNESS FOR A PARTICULAR PURPOSE.

Emission Warranty

Products Warranted

This Emission Warranty applies to new Engines certified to United States EPA 40 CFR 94 sold by CMD that are installed in vessels flagged or registered in the United States**.

Coverage

CMD warrants to the first user and each subsequent purchaser that the Engine is designed, built, and equipped so as to conform at the time of sale by CMD with all U.S. Federal emission regulations applicable at the time of manufacture and that it is free from defects in workmanship or material which would cause it not to meet these regulations within the longer of the following periods: (A) Five years or 5,000 hours of operation, whichever occurs first. The Emissions

To buy Cummins Parts and Service Manuals, Training Guides, or Tools go to our website at https://store.cummins.com

Warranty starts from the date of delivery of the Engine to the first user, or the date the unit is first leased, rented, or loaned, or when the Engine has been operated for 50 hours, whichever occurs first, or (B) The Base Engine Warranty.

Limitations

The owner may elect to have maintenance, replacement, or repair of the emission control parts performed by a facility other than a CMD distributor, an authorized dealer or a repair location approved by CMD, and may elect to use parts other than new genuine CMD or CMD approved rebuilt parts and assemblies for such maintenance, replacement or repair; however, the cost of such service or parts and subsequent failures resulting from such service or parts will not be covered under this emission control system warranty.

Failures, except those resulting from a defect in materials, or factory workmanship, are not covered by this WARRANTY.

CMD IS NOT RESPONSIBLE FOR INCIDENTAL OR CONSEQUENTIAL DAMAGES.

In the United States** and Canada, this warranty gives you specific legal rights, and you may also have other rights which vary from state to state.

Outside the United States** and Canada, in case of consumer sales, in some countries the Owner has statutory rights which cannot be affected or limited by the terms of this warranty.

Nothing in this warranty excludes or restricts any contractual rights the Owner may have against third parties.

* Locations in the United States and Canada are listed in the Cummins United States and Canada Sales and Service Directory; other locations are listed in the Cummins International Sales and Service Directory.

** United States includes American Samoa, the Commonwealth of Northern Mariana Islands, Guam, Puerto Rico, and the U.S. Virgin Islands.

To buy Cummins Parts and Service Manuals, Training Guides, or Tools go to our website at https://store.cummins.com

Cummins Recreational Marine Propulsion (QSB5.9/QSB6.7/QSC8.3/QSL9/QSM11/X15)

Coverage

Engines Included In This Coverage

Marine Propulsion: QSB5.9/QSB6.7/QSC8.3/QSL9/QSM11/X15.

Products Warranted

This Warranty applies to new Engines sold by Cummins and delivered to the first user on or after January 1, 2018, used in Recreational Marine Propulsion applications anywhere in the world where Cummins approved service is available.

This Warranty covers any failures of the Engine, under normal use and service, which result from a defect in Cummins material or workmanship (Warrantable Failure). These Products have the following designation.

High Output Rating

The HO rating applies to variable load applications where annual use is typically less than 500 hours per year and full power is limited to one (1) hour out of every eight (8) hours of operation. Reduced power operation must be at or below cruise speed as defined in the following table.

Rated Speed (rpm)	Cruise Speed (Reduction from rated speed, rpm)
Less than 2,800	200 rpm
2,801 to 3,500 rpm	300 rpm
3,501 to 4,500 rpm	400 rpm

Use of an Engine with this HO rating in commercial applications will void the Warranty. Specifically, a vessel of less than 100 gross tons carrying more than six paying passengers will not be considered a recreational vessel.

Base Engine Warranty

This Warranty covers any failures of the Engine, under normal use and service, which result from a defect in Cummins material or factory workmanship (Warrantable Failure).

This limited Warranty covers the Engine from the date of shipping from the Cummins factory to the end of the Coverage duration. The end of the Coverage duration is calculated based on an in-service date. The Base Coverage duration ends two (2) years after the in-service date or 1,000 hours of total operation, whichever occurs first. The in-service date is defined as 1) the date of the initial delivery of the Engine to the first end user (through purchase, lease, or loan), or 2) the date when 200 hours of operation for Quantum Series Engines (QSB5.9/QSB6.7/QSC8.3/QSL9/QSM11/X15) have accumlulated.

Engine aftertreatment components included in the Cummins Critical Parts List (CPL) and marked with a Cummins part number are covered under Base Engine Warranty.

Additional Coverage is outlined in the Emission Warranty section.

Extended Major Components Warranty

The Extended Major Components Warranty covers Warrantable Failures of the Engine cylinder block, camshaft, crankshaft and connecting rods (Covered Parts).

Bushing and bearing failures are NOT covered.

This limited Warranty covers the Engine from the date of shipping from the Cummins factory to the end of the Coverage duration. The end of the Coverage duration is calculated based on an in-service date. The Extended Major Components Coverage duration ends six (6) years after the in-service date or 3,000 hours of total operation, whichever occurs first. The in-service date is defined as either 1) the date of the initial delivery of the Engine to the first end-user (through purchase, lease or loan), or 2) the date when 200 hours of operation for Quantum Series Engines (QSB5.9/QSB6.7/QSC8.3/QSL9/QSM11/X15) have accumulated.

Consumer Products

The Warranty on Consumer Products in the United States* is a limited Warranty.

CUMMINS IS NOT RESPONSIBLE FOR INCIDENTAL OR CONSEQUENTIAL DAMAGES.

Any implied Warranties applicable to Consumer Products terminate concurrently with the expiration of the express Warranties applicable to the Product. In the United States*, some states do not allow the exclusion of incidental or consequential damages, or limitations on how long an implied Warranty lasts, so the limitations or exclusions herein may not apply to you.

To buy Cummins Parts and Service Manuals, Training Guides, or Tools go to our website at https://store.cummins.com

These Warranties are made to all Owners in the chain of distribution and Coverage continues to all subsequent Owners until the end of the periods of Coverage.

Cummins Responsibilities

During The Base Engine Warranty

Cummins will pay for all parts and labor needed to repair the damage to the Product resulting from a Warrantable Failure when performed during normal business hours.

All labor costs will be paid in accordance with Cummins published Standard Repair Time guidelines when it is necessary for mechanics to make on-site Warranty repairs.

Cummins will pay reasonable travel expenses, including meals, mileage and lodging, for mechanics to travel to and from the repair dock. Labor must be performed by an authorized Cummins Repair Facility.

Cummins will pay for the lubricating oil, antifreeze, filter elements and other maintenance items that are not reusable due to the Warrantable Failure.

Cummins will pay for reasonable labor costs for Engine removal and reinstallation when necessary to repair a Warrantable Failure.

During The Extended Major Components Warranty

Cummins will pay for the repair or, at its option, replacement of the defective Covered Part and any Covered Part damaged by a Warrantable Failure of the defective Covered Part.

Owner Responsibilities

During Both The Base Engine And The Extended Major Components Warranties

Owner is responsible for the cost of lubricating oil, antifreeze, filter elements and other maintenance items replaced during Warranty repairs unless such items are not reusable due to the Warrantable Failure.

Owner is responsible for the operation and maintenance of the Product as specified by the applicable Cummins Operation and Maintenance Manual. Owner is also responsible for providing proof that all recommended maintenance has been performed. Exceeding the operational parameters of the HO rating will void this Warranty. The Owner of the boat is ultimately responsible for ensuring the Engine is properly operated and maintained. The Warranty will be void on any Engines that are misapplied, not maintained properly or misused.

Before the expiration of the applicable Warranty, Owner must notify a Cummins distributor, authorized dealer or other repair location approved by Cummins of any Warrantable Failure and make the Engine available for repair by such facility. Service locations are listed on the Cummins Worldwide Service Locator at cummins.com.

In the event of any Product failure, Owner is responsible for the cost of towing the boat to the repair dock and for all associated docking and harbor charges.

Owner is responsible for communication expenses, meals, lodging and similar costs incurred as a result of a Warrantable Failure.

Owner is responsible for maintaining the Engine hourmeter in good working order at all times and ensuring that the hourmeter accurately reflects the total hours of operation of the Product.

Owner is responsible for the costs to investigate complaints, unless the problem is caused by a defect in Cummins material or factory workmanship.

Owner is responsible for non-Engine repairs, “downtime” expenses, cargo damage, fines, all applicable taxes, all business costs and other losses resulting from a Warrantable Failure.

During The Extended Major Components Warranty

Owner is responsible for the cost of all other parts and labor used for the repair except for the defective Covered Part and any Covered Part damaged by a Warrantable Failure of the defective Covered Part.

Limitations

Failure to use the specified fuel as listed in the Cummins Fuel Bulletin #3379001 Table 1 (Cummins Inc. Required Diesel Fuel Specifications) can damage the Engine and aftertreatment system within a short period of time. This damage could cause the Engine to become inoperable and failures attributable to the use of incorrect fuels will be denied Warranty Coverage. Fuel specifications also need to comply with local fuel regulations (EN590 for Europe and ASTM D975 for North America) for Warranty eligibility.

Cummins is not responsible for failures or damage resulting from what Cummins determines to be abuse or neglect, including, but not limited to: operation without adequate coolants or lubricants; overfueling; overspeeding; lack of maintenance of cooling, lubricating or intake systems; improper storage, starting, warmup, run-in or shutdown practices; unauthorized modifications to the Engine; improper loading that does not allow the Engine to meet Cummins installation guidelines; submersion, freezing temperatures, improper service, removal of parts or running the Engine out of water; water ingestion, unless caused by a Warrantable Failure. Cummins is also not responsible for failures caused by incorrect oil or fuel, or by water, dirt or other contaminants in the fuel or oil. Cummins is not responsible for failure resulting from:

To buy Cummins Parts and Service Manuals, Training Guides, or Tools go to our website at https://store.cummins.com

1 Use or application of the Engine inconsistent with its rating designation and Engine duty cycle set forth above.

2 Incorrect installation.

Before a claim for excessive oil consumption will be considered, Owner must submit adequate documentation to show that oil consumption exceeds Cummins published standards. Cummins is not responsible for failures of maintenance components supplied by Cummins beyond 90 days after the Coverage duration start date. Maintenance components include, but are not limited to: sea water pump impellers; zinc plugs; oil filters; fuel filters; air filters; water filters; and fuel/water separator filters.

Cummins does not warrant accessories that are not supplied by a Cummins factory.

Parts used in Warranty repairs may be new Cummins parts, Cummins approved rebuilt parts or repaired parts. Cummins is not responsible for failures resulting from the use of parts not supplied by Cummins.

A new Cummins or Cummins approved rebuilt part used to replace a Warranted Part assumes the identity of the Warranted Part it replaced and is entitled to the remaining Coverage hereunder.

CUMMINS DOES NOT COVER WEAR OR WEAROUT OF COVERED PARTS.

CUMMINS IS NOT RESPONSIBLE FOR INCIDENTAL OR CONSEQUENTIAL DAMAGES.

THESE WARRANTIES SET FORTH HEREIN ARE THE SOLE WARRANTIES MADE BY CUMMINS IN REGARD TO THESE ENGINES. CUMMINS MAKES NO OTHER WARRANTIES, EXPRESS OR IMPLIED, OR OF MERCHANTABILITY OR FITNESS FOR A PARTICULAR PURPOSE.

In the United States* and Canada, this Warranty gives you specific legal rights, and you may also have other rights, which vary from state to state.

Outside the United States* and Canada, in the case of consumer sales, in some countries the Owner has statutory rights, which cannot be affected or limited by the terms of this Warranty. Nothing in this Warranty excludes or restricts any contractual rights the Owner may have against third parties.

Emission Warranty

Products Warranted

This Emission Warranty applies to new Engines certified to United States EPA 40 CFR 94 & 1042 sold by Cummins that are installed in vessels flagged or registered in the United States*.

Coverage

Cummins warrants to the first user and each subsequent purchaser that the Engine is designed, built and equipped so as to conform at the time of sale by Cummins with all U.S. Federal emission regulations applicable at the time of manufacture and that it is free from defects in workmanship or material that would cause it not to meet these regulations within the longer of the following periods:

1 The Emission Warranty commences on the date of delivery of the Product to the first user, or the date the unit is first leased, rented or loaned, and ends when the Product has accumulated five years or 1,000 hours of operation, whichever occurs first, or

2 The Base Engine Warranty.

Limitations

Failure to use the specified fuel as listed in the Cummins Fuel Bulletin #3379001 Table 1 (Cummins Inc. Required Diesel Fuel Specifications) can damage the Engine and aftertreatment system within a short period of time. This damage could cause the Engine to become inoperable and failures attributable to the use of incorrect fuels will be denied Warranty Coverage. Fuel specifications also need to comply with local fuel regulations (EN590 for Europe and ASTM D975 for North America) for Warranty eligibility.

Failures, except those resulting from a defect in materials or factory workmanship, are not covered by the Warranty.

The Owner may elect to have maintenance, replacement or repair of the emission control parts performed by a facility other than a Cummins distributor, an authorized dealer or a repair location approved by Cummins, and may elect to use parts other than new genuine Cummins or Cummins approved rebuilt parts and assemblies for such maintenance, replacement or repair; however, the cost of such service or parts and subsequent failures resulting from such service or parts will not be covered under this Emission Control Warranty.

Cummins is not responsible for failures or damage resulting from what Cummins determines to be abuse or neglect, including, but not limited to: operation without adequate coolant or lubricants; overfueling; overspeeding; lack of maintenance of lubricating, cooling or intake systems; improper storage, starting, warmup, run-in or shutdown practices; unauthorized modifications of the Engine. Cummins is also not responsible for failures caused by incorrect oil, fuel or diesel exhaust fluid or by water, dirt or other contaminants in the fuel, oil or diesel exhaust fluid.

Cummins is not responsible for non-Engine repairs, "downtime" expenses, cargo damage, fines, all business costs or other losses resulting from a Warrantable Failure.

To buy Cummins Parts and Service Manuals, Training Guides, or Tools go to our website at https://store.cummins.com

Cummins is not responsible for incidental or consequential damages.

In the United States* and Canada, this Warranty gives you specific legal rights, and you may also have other rights, which vary from state to state. Outside the United States* and Canada, in the case of consumer sales, in some countries the Owner has statutory rights, which cannot be affected or limited by the terms of this Warranty. Nothing in this Warranty excludes or restricts any contractual rights the Owner may have against third parties.

* United States includes American Samoa, the Commonwealth of Northern Mariana Islands, Guam, Puerto Rico and the U.S. Virgin Islands.

To buy Cummins Parts and Service Manuals, Training Guides, or Tools go to our website at https://store.cummins.com

About the Manual i-2
About i-2
General Information i-2
Acronyms and Abbreviations i-28
General Information i-28
Additional Service Literature L-1
General Information L-1
Aftercooler Assembly (Sea Water) 6-28
Assemble 6-36
Clean and Inspect for Reuse 6-34
Disassemble 6-31
Finishing Steps 6-39
Flush 6-39
Initial Check 6-28
Install 6-37
Preparatory Steps 6-29
Remove 6-31
Aftercooler Assembly (Sea Water) 8-1
Assemble 8-9
Clean and Inspect for Reuse 8-7
Disassemble 8-4
Finishing Steps 8-12
Flush 8-12
Initial Check 8-1
Install 8-10
Preparatory Steps 8-2
Remove 8-4
Air Cleaner Assembly (Engine-Mounted) 3-7
Initial Check 3-7
Air Cleaner Assembly (Engine-Mounted) 6-13
Clean 6-14
General Information 6-13
Install 6-15
Remove 6-13
Air Cleaner Assembly (Engine-Mounted) A-8
Clean A-9
General Information A-8
Install A-10
Remove A-9
Air Intake Piping 6-15
Maintenance Check 6-16
Select Service Tools 6-15
Air Intake System V-5
Specifications V-5
Batteries 6-16
General Information 6-16
Battery Cables and Connections 6-17
Initial Check 6-17
Belt Guard A-4
Install A-4
Remove A-4
Belt Tensioner, Automatic (Water Pump) A-6
Finishing Steps A-8
Inspect for Reuse A-7
Install A-8
Preparatory Steps A-6
Remove A-7
Capscrew Markings and Torque Values V-20
Capscrew Markings and Torque Values - Metric V-20
Capscrew Markings and Torque Values - U.S. Customary V-21
General Information V-20
Charging System Alternator A-11
Finishing Steps A-13
Install A-12
Preparatory Steps A-11
Remove A-11
Alternator Not Charging or Insufficient Charging TS-3
Alternator Overcharging TS-5
Closed-Crankcase Ventilation System Filter A-1
Clean and Inspect for Reuse A-2
Finishing Steps A-3
General Information A-1
Initial Check A-1
Install A-3
Preparatory Steps A-1
Remove A-2
CMD Quantum Commercial Marine Propulsion (QSB5.9/QSB6.7/QSC8.3/QSL9/QSM11/SDI/TDI) W-1
Cold Weather Starting 1-4
General Information 1-4
Using Starting Aids 1-4
Control Head Operation 1-10
Backup Throttle 1-12
Gauges 1-10
Instrument Panel 1-10
Programmable Features 1-12
Coolant Contamination TS-6
Coolant Filter 6-10
Install 6-10
Remove 6-10
Coolant in the Lubricating Oil TS-16
Coolant Level 3-5
Maintenance Check 3-5
Coolant Loss - External TS-7
Coolant Loss - Internal TS-9
Coolant Recommendations and Specifications V-14
Coolant Filter V-16
Coolant Service V-14
Coolant Specifications V-14
General Information V-14
Coolant Temperature Above Normal - Gradual Overheat TS-10
Coolant Temperature Above Normal - Sea Water Cooling System TS-17
Coolant Temperature Above Normal - Sudden Overheat TS-13
Coolant Temperature Below Normal TS-15
Cooling System 9-1
Drain 9-1
Fill 9-2
Flush 9-4
Cooling System V-4
Specifications V-4
Cummins Customized Parts Catalog L-3
General Information L-3
Ordering the Customized Parts Catalog L-3
Cummins Recreational Marine Propulsion (QSB5.9/QSB6.7/QSC8.3/QSL9/QSM11/X15) W-5
Cummins® Service Engine Model Product Identification E-22
General Information E-22
Filter Specifications V-9
General Information V-9
Daily Maintenance Procedures - Overview 3-1
General Information 3-1
System Operation Report 3-1
Unusual System Noise 3-1
Drive Belt Tension V-17
Tension Chart V-17
Electrical System V-7
Batteries (Specific Gravity) V-8
Specifications V-7
Electromagnetic Interference (EMI) 1-18
General Information 1-18
System EMI Radiation Levels 1-18
System EMI Susceptibility 1-18
Electronic Controlled Fuel System 1-17
Diagnostic Fault Codes 1-18
Theory of Operation 1-17
Engine Acceleration or Response Poor TS-18
Engine Component Torque Values V-18
Torque Table V-18
Engine Diagrams E-4
Engine Views E-4
Engine Difficult to Start or Will Not Start (Exhaust Smoke) TS-20
Engine Difficult to Start or Will Not Start (No Exhaust Smoke) TS-22
Engine Identification E-1
Cummins® Engine Nomenclature E-2
Engine Control Module Dataplate E-3
Engine Dataplate E-1
Fuel Injection Pump Dataplate E-2
Engine Mounting Bolts 6-18
Inspect for Reuse 6-18
Engine Noise Excessive TS-24
Engine Noise Excessive — Combustion Knocks TS-26
Engine Noise Excessive - Turbocharger TS-27
Engine Operating Range 1-6
General Information 1-6
Engine Power Output Low TS-29
Engine Runs Rough at Idle TS-32
Engine Runs Rough or Misfires TS-34
Engine Shutdown 1-9
General Information 1-9
Engine Shuts Off Unexpectedly or Dies During Deceleration TS-36
Engine Speed Surges at Low or High Idle TS-38
Engine Speed Surges Under Load or in Operating Range TS-39
Engine Starts But Will Not Keep Running TS-41
Engine Vibration Excessive TS-42
Engine Will Not Crank or Cranks Slowly (Electric Starter) TS-44
Engine Will Not Reach Rated Speed (RPM) TS-46
Engine Will Not Shut Off TS-47
Engine Wiring Harness 6-18
Maintenance Check 6-18
Exhaust Smoke Excessive Under Load TS-48
Exhaust System V-6
Specifications V-6
Flow Diagram, Air Intake System D-16
General Information D-16

Flow Diagram, Cooling System D-10
General Information D-10
Flow Diagram, Exhaust System D-17
General Information D-17
Flow Diagram, Fuel System D-2
General Information D-2
Flow Diagram, Lubricating Oil System D-5
General Information D-5
Fraction, Decimal, Millimeter Conversions V-23
Conversion Chart V-23
Fuel Consumption Excessive TS-50
Fuel Filter (Spin-On Type) 6-6
Finishing Steps 6-8
General Information 6-6
Install 6-7
Prime 6-8
Remove 6-7
Fuel in Coolant TS-52
Fuel in the Lubricating Oil TS-53
Fuel or Lubricating Oil Leaking From Exhaust Manifold TS-54
Fuel Recommendations and Specifications V-10
Fuel Recommendations V-10
Fuel System V-2
Specifications V-2
Fuel-Water Separator 3-6
Drain 3-6
Fuel-Water Separator 6-5
Install 6-5
Remove 6-5
General Cleaning Instructions i-23
Abrasive Pads and Abrasive Paper i-23
Definition of Clean i-23
Fuel System i-26
Gasket Surfaces i-24
Plastic Bead Cleaning i-25
Solvent and Acid Cleaning i-24
Steam Cleaning i-25
General Engine V-1
Specifications V-1
General Operating Instructions 1-7
General Information 1-7
General Repair Instructions i-21
General Information i-21
Welding on a Vehicle with an Electronic Controlled Fuel System i-22
General Safety Instructions i-9
Aftertreatment i-14
Best Practices i-9
Common Hazards i-17
Common Substances i-15
Electrical Components i-17
Fuels i-11
Hazardous Substances i-16
Important Safety Notice i-9
Job Safety Assessment i-18
Personal Protective Equipment (PPE) i-10
Power Generation Applications i-14
Work Environment i-9
Heat Exchanger 6-23
Flush 6-23
How to Use the Manual i-3
General Information i-3
Illustrations i-8
General Information i-8
Intake Manifold Air Temperature Above Specification TS-55
Intake Manifold Pressure (Boost) is Below Normal TS-56
Lubricating Oil and Filters 5-1
Drain 5-1
Fill 5-3
Install 5-2
Remove 5-2
Lubricating Oil Consumption Excessive TS-58
Lubricating Oil Contaminated TS-60
Lubricating Oil Level 3-6
General Information 3-6
Maintenance Check 3-7
Lubricating Oil Loss TS-61
Lubricating Oil Pressure High TS-62
Lubricating Oil Pressure Low TS-63
Lubricating Oil Recommendations and Specifications V-11
AfterMarket Oil Additive Usage V-13
General Information V-11
New Engine Break-in Oils V-13
Lubricating Oil Sludge in the Crankcase Excessive TS-65
Lubricating Oil System V-3
Specifications V-3
Maintenance Guidelines - Overview 2-1
General Information 2-1
Maintenance Procedures - Overview 4-1
General Information 4-1
Maintenance Procedures - Overview 5-1
General Information 5-1
Maintenance Procedures - Overview 6-1
General Information 6-1
Maintenance Procedures - Overview 7-1
General Information 7-1
Maintenance Procedures - Overview 8-1
General Information 8-1
Maintenance Procedures - Overview 9-1
General Information 9-1
Maintenance Record Form 2-5
Maintenance Data 2-5
Maintenance Schedule 2-3
General Information 2-3
Marine Gear Oil 3-2
Maintenance Check 3-2
Marine Gear Oil and Fuel Cooler Assembly 6-26
Flush 6-26
Marine Gear Oil Cooler 6-25
Flush 6-25
Marine Vibration Isolator 6-18
Finishing Steps 6-23
General Information 6-18
Initial Check 6-19
Inspect for Reuse 6-22
Install 6-22
Preparatory Steps 6-21
Remove 6-21
Marine Vibration Isolator A-19
Finishing Steps A-23
General Information A-19
Initial Check A-19
Inspect for Reuse A-22
Install A-23
Preparatory Steps A-21
Remove A-22
Newton-Meter to Foot-Pound Conversions V-24
Conversion Chart V-24
Normal Starting Procedure 1-2
General Information 1-2
Operating Instructions - Overview 1-1
General Information 1-1
Operating the Engine 1-5
Ambient Temperature 1-5
Normal 1-5
Overhead Set 7-1
Adjust 7-1
Finishing Steps 7-3
Preparatory Steps 7-1
Pipe Plug Torque Values V-25
Torque Table V-25
Propeller Shaft A-16
Cleaning Machine Operation A-16
General Information A-16
Preparatory Steps A-16
Specifications A-18
Radiator Pressure Cap 6-11
General Information 6-11
Inspect for Reuse 6-12
Routine Service and Parts S-1
General Information S-1
Sea Water Hoses 6-4
Inspect 6-4
Sea Water Pipe A-4
Finishing Steps A-6
Install A-5
Preparatory Steps A-4
Remove A-5
Sea Water Pump 6-1
Repair 6-1
Sea Water Strainer 3-2
Assemble 3-4
Clean 3-4
Disassemble 3-3
General Information 3-2
Prime 3-4
Sealants V-19
General Information V-19
Seasonal Storage SS-1
General Information SS-1
Service Assistance S-1
General Information S-1
Service Literature Ordering Location L-2
Contact Information L-2
Smoke, Black — Excessive TS-67

Smoke, White — Excessive..... TS-69
Starting Motor A-13
Finishing Steps.....A-15
Initial Check.....A-13
Install..... A-14
Preparatory Steps.....A-14
Remove..... A-14
Starting Procedure After Extended Shutdown or Oil Change 1-5
General Information..... 1-5
Supplemental Coolant Additive (SCA) and Antifreeze Concentration 6-9
Maintenance Check..... 6-9
Symbols i-4
General Information..... i-4
System Diagrams - Overview D-1
General Information.....D-1
Tap-Drill Chart - U.S. Customary and Metric V-26
General Information.....V-26
To the Owner and Operator i-1
General Information..... i-1
Tool Requirements 2-2
General Information..... 2-2
Troubleshooting Procedures and Techniques TS-1
General Information.....TS-1
Troubleshooting Symptoms Overview TS-2
General Information.....TS-2
Turbocharger - Compressor Seal Oil Leak.....TS-71
Turbocharger - Turbine Seal Oil Leak..... TS-73
Vibration Damper, Viscous 9-8
Finishing Steps..... 9-8
Maintenance Check..... 9-8
Preparatory Steps..... 9-8
Weights and Measures - Conversion Factors V-27
Conversion Chart.....V-27
Zinc Anode 4-1
Finishing Steps..... 4-5
General Information..... 4-1
Inspect for Reuse.....4-3
Install.....4-4
Preparatory Steps..... 4-2
Remove.....4-2

To buy Cummins Parts and Service Manuals, Training Guides, or Tools go to our website at https://store.cummins.com

Cummins Inc.
Box 3005
Columbus, Indiana, U.S.A., 47202

www.cummins.com

Copyright© 2021
Cummins Inc.

Bulletin 4021571
Printed in U.S.A. 02-MARCH-2021