19BY7026Q0011-P00001 DESCRPTIONS

Item	Item Description	Qty	Unit
1.	"TRIPLEX PUMP Specifications: CAPRARI PUMP P6P45/3/20/16A, S/N #: 788373/3 TYPE:E13/38/3/20A SHAFT LA3/20, STRAINER SUP6, MOTOR BASE E13/38/3/20A. MOTOR Specifications: CAPRARI MOTOR P300554T2V11322 S/N# S102415708.1 TYPE: JM132SA 4 B5 POWER: 400VAC, 50HZ, 10.8A Delta/6.26A Star, 5.5kw, 1465rpm, 0.82 Power factor.	1.00	each
2.	"BOOSTER PUMP Specifications: Hydrotio. Model: 6LLCZ-17 Serv No: 16539 TYPE: WL/CAL,,45 GPM@ 195 TDH (2.84 lps@ 5.82 bar), 1500 RPM; 6LL bowl assembly; std wall column assy. (SS shaft), 4" ductile iron discharge head wth NSF Caoting, SS basket strainer, 5 hp US VHS premium efficient TEFC motor, assembled	1.00	each

	and std. crating, NSF 6010 Approved Coatings. MOTOR Specifications: Manufacturer US MOTORS MODEL" #16703372-100 ID# X 11 16703372-0001 M 0001 TYPE TUS, ENCLOURE TEFC FR 213TP, RPM 1475 Horsepower 5.0 Pole{s) 04, 3PH Voltage{s) .400VAC, 50HZ/60HZ, PF 80.4, MAX KVAR 2.10 AMPS 7.30 Frame Size 184TP Outlet Box AF 3.19 Outlet Box AA 1.00		

SECTION 02510 – WATER DISTRIBUTION AND TREATMENT
TAB F – PRODUCT DATA_DWTS_ PRESS PUMP_INDEX

ITEM	VENDOR/MANUFACTURER	PAGE
DRAWING	ENVIROSEP WWW.ENVIROSEP.COM	1
SEQUENCE OF OPERATIONS		3
NAMEPLATE DATA		14
MOTOR PERFORMANCE		16
RENEWAL PARTS		18
TYPICAL REED CRITICAL FREQUENCY DATA		22
SOFTSTARTER INTELLIGENT CONTROLLERS	SPRECHER + SCHUH WWW.SPRECHERSCHUH.COM	23
MODES OF OPERATIONS		
PRESSURE REDUCING AND SUSTAINING VALVE WITH HYDRAULIC CHECK FEATURES	WATTS ACV WWW.WATTSACV.COM	25
CLASSIC SERIES		
SERIES 30		28
SELECTION DATA		30
64 SERIES FULL PORT BRASS BALL VALVE		31
BRASS CHECK VALVES	NIBCO WWW.NIBCO.COM	32
700 SERIES – FIELD LIQUID FILLABLE	M&M CONTROL SERVICE, INC WWW.MMCONTROL.COM	33
SPECIFICATION		34
PRESSURE AND VACUUM SENSORS		35
FLOWSENSOR		37

ITEM	VENDOR/MANUFACTURER	PAGE
STAINLESS STEEL PUMP CONNECTORS		40

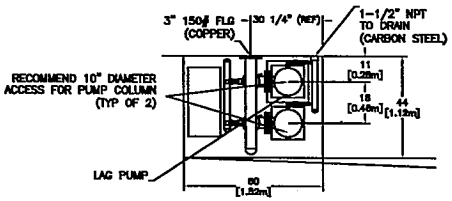

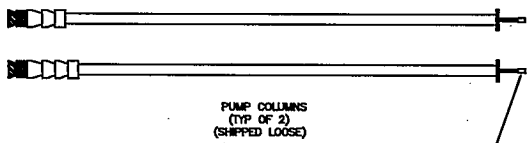

SHIPPED IN THIS ORIENTATION

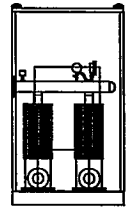

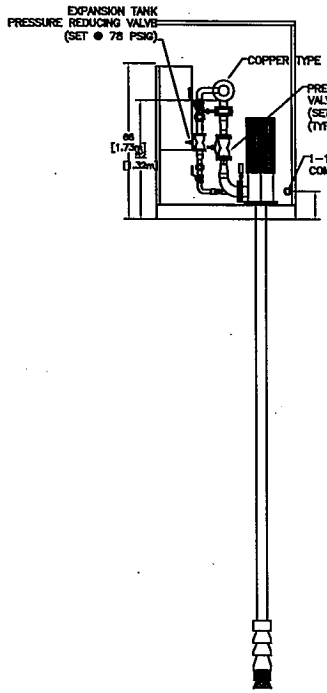

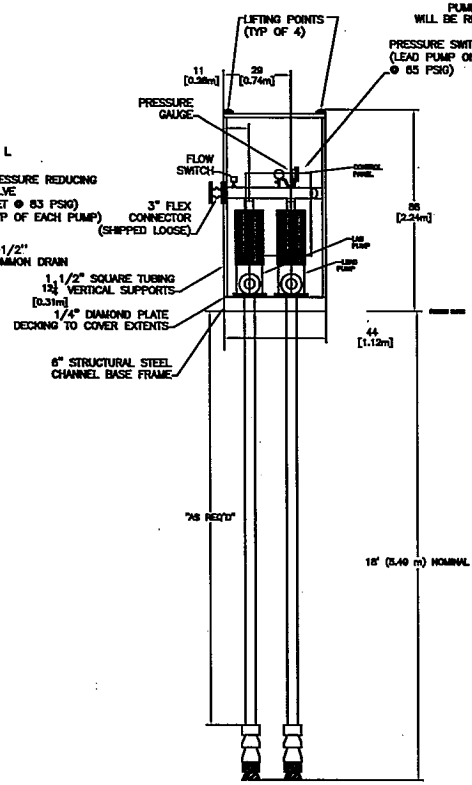

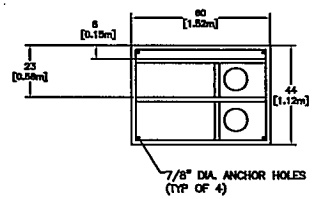

ANCHOR & BASE PLAN

NOTES:
1 ALL PIPING SHALL BE TYPE COPPER TYPE L UNLESS NOTED TO BE COMPATIBLE WITH DOMESTIC WATER SERVICE, I.E. BRASS, COPPER, CAST IRON.
2 CARBON STEEL FRAME SHALL BE PAINTED WITH EPOXY COATING.
3 COMPLETE PACKAGE SHALL BE UL-LISTED, WITH ENVIROSEP SS NAMEPLATE.
4 BUYER SHALL VERIFY ACTUAL DEPTH OF "WET WELL" WITH RESPECT TO PUMP COLUMN LENGTH. PUMP COLUMN LENGTH MAY NOT BE FIELD MODIFIED.
5 COMPLETE VERTICAL PACKAGE SUPPORT FRAMING NOT SHOWN. NO PERMANENT FRAMING SHALL EXTEND BELOW FINISHED FLOOR LEVEL.
6 PACKAGE SHALL BE HYDROSTATICALLY TESTED AND AN OPERATIONAL TEST SHALL BE CONDUCTED PRIOR TO SHIPMENT. FACTORY SETPOINTS SHALL BE PRE-CONFIGURED.
7 ANY AMBIGUITIES, EXPRESS CONFLICTS, OR DISCREPANCIES SHALL BE NOTED BY THE BUYER/ENGINEER DURING THE SUBMITTAL PROCESS. ALL SUCH MATTERS SHALL BE CLARIFIED AND A FINAL SUBMITTAL AND ENGINEERING DRAWINGS WILL BE PREPARED BY SELLER TO ADDRESS SUCH MATTERS. FOLLOWING APPROVAL OF THE FINAL SUBMITTAL AND ENGINEERING DRAWINGS, SELLER ACCEPTS APPROVAL AS SUCH, AS ACCEPTANCE OF GOODS AND EQUIPMENT TO BE PROVIDED.
8 ELECTRICAL WIRING AND CONDUIT, NOT SHOWN.
9 ALL DIMENSIONS ARE IN INCHES. ACTUAL DIMENSIONS MAY VARY.
10 APPROXIMATE WEIGHT IS 3000 LBS.
11 EXPORT CRATING, AND PROTECTIVE COVERING, SHALL BE PROVIDED.
12 BUYER SHALL BE RESPONSIBLE FOR ENSURING ACCESS HOLES MEET PROPER DIMENSIONS FOR PUMP COLUMN ACCESS.

DUPLEX BOOSTER PACKAGE

EnviroSep
Fluid & Heat Recovery Systems

Tilley Mechanical Technologies, Inc.
Post Office Box 857
Georgetown, South Carolina 29442
Phone (843) 546-7400
Fax (843) 546-7407

SUBMITTAL

NO.	REVISION	CHKD.	APP'D.	DATE
NO.	REVISION	CHKD.	APP'D.	DATE

ACAD NAME:

THIS DRAWING IS A PRIVATE AND CONFIDENTIAL COMMUNICATION AND THE PROPERTY OF BARNWELL ENGINEERING, WEST CHICAGO, IT MAY NOT BE COPIED OR LENT WITHOUT CONSENT OF OWNERS, AND MUST BE PROMPTLY RETURNED WITH RECEIPT AND/OR CERTIFICATE OF COPY.

MACHINING TOLERANCES UNLESS OTHERWISE NOTED
REMOVE ALL BURRS BREAK OUTSIDE EDGES

DRAWN BY	J. MARTIN
DATE	OCTOBER 8, 2010
CHECKED BY	
APPROVED BY	
APPROVED BY	

PROJ. NUMBER	
SCALE 1" = 1'-0"	
TITLE	BOOSTER PUMP PACKAGE LAYOUT AND SIZING
DRAWING NUMBER	1008019-2
SHEET NUMBER	1 OF 1
REV.	0

MATERIALS SCHEDULE

CV–1/2	PUMP DISCHARGE CHECK VALVE, (TYP. OF 2)
P–1/2	SYSTEM PUMPS (TYP.2)
PI–1/2	PRESSURE GAUGE (TYP.2)
FS–1	FLOW SWITCH – LOW FLOW
PV–1/2	PRESSURE REDUCING VALVE (TYP.2)
T–1	CUSTOMER SUPPLIED TANK
V–1/2	PUMP SUCTION ISOLATION VALVE (TYP. OF 2)
SRV–1/2	SAFETY RELIEF VALVE (TYP. OF 2)

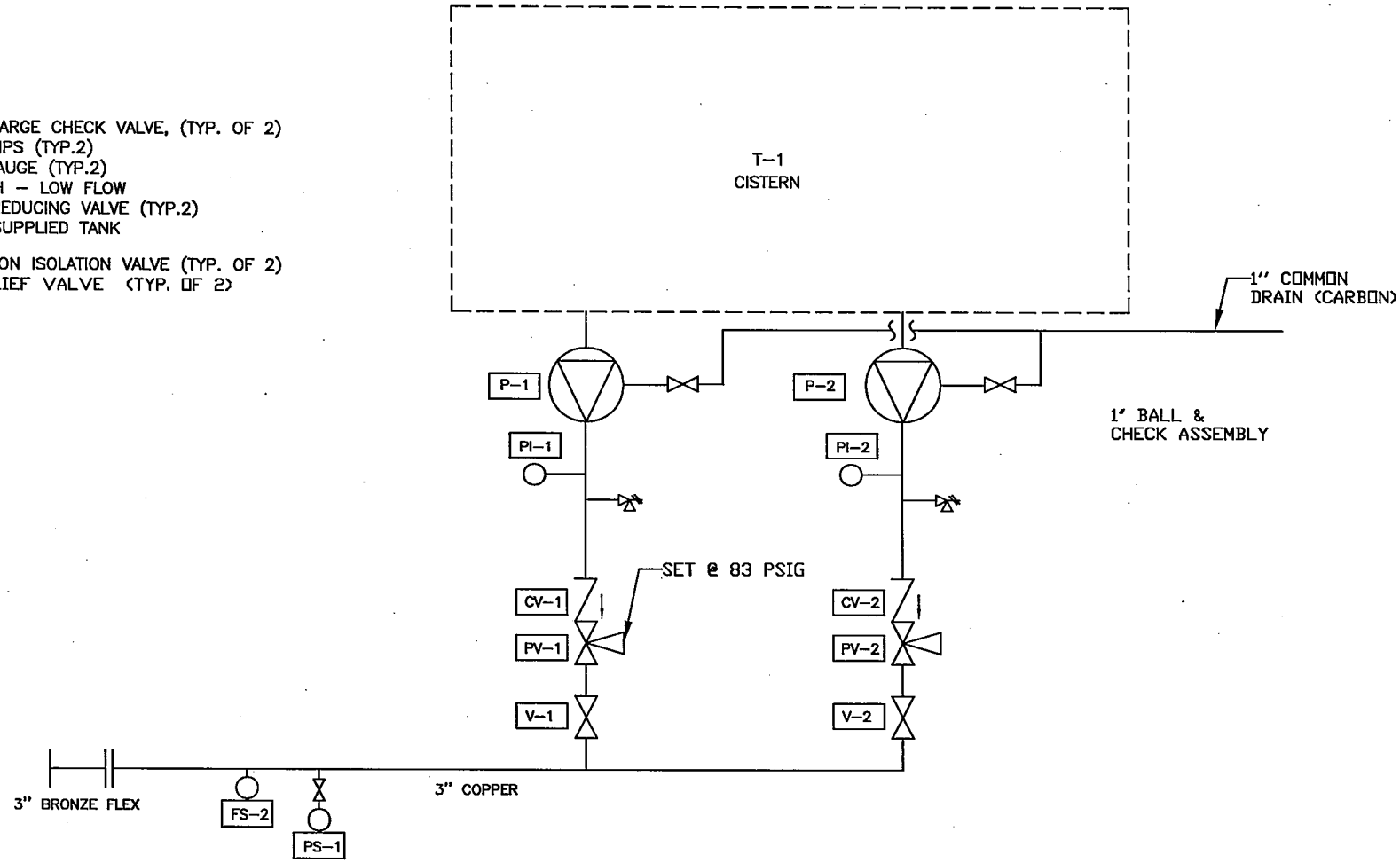

EnviroSep
Fluid & Heat Recovery Systems

Tilley Mechanical Technologies, Inc.
Post Office Box 857
Georgetown, South Carolina 29442
Phone (843) 546-7400
Fax (843) 546-7407

NO.	REVISION	CHKD.	APP'D.	DATE
1	ADDED RELIEF VALVES			03/21/11
0	Original Drawing	FHC		03/24/08

ACAD NAME:

THIS DRAWING IS A PRIVATE AND CONFIDENTIAL COMMUNICATION AND THE PROPERTY OF ENVIROSEP, GEORGETOWN, SOUTH CAROLINA. IT MUST NOT BE COPIED OR LENT WITHOUT CONSENT OF ENVIROSEP AND MUST BE PROMPTLY RETURNED WITH TENDER AND/OR COMPLETION OF ORDER.

MACHINING TOLERANCES UNLESS OTHERWISE NOTED: 125 STANDARD MACHINE FINISH — REMOVE ALL BURRS BREAK OUTSIDE EDGES

DRAWN BY J. MARTIN
DATE OCT. 13, 2010
CHECKED BY
APPROVED BY
AI REVIEW

PROJ. NUMBER
SCALE NTS

TITLE POTABLE BOOSTER TRIPLEX PUMPING PACKAGE

DRAWING NUMBER 1008019–2
SHEET NUMBER 1 OF 1
REV. 0

2

Constant Speed Booster Pumps
Sequence of Operations
October 8, 2010

Booster Pump Package

1. The lead pump is controlled by the HAND-OFF-AUTO switch on the panel.
2. In HAND position the pump will run at full speed until it is switched to OFF or AUTO position.
3. In OFF position the pump will be disabled.
4. In the AUTO position the pump will start automatically as system pressure drops below the lead setpoint and cutoff when system flow drops below the low flow alarm point.
5. The lag pump is controlled by the HAND-OFF-AUTO switch on the panel.
6. In HAND position the pump will run at full speed until it is switched to OFF or AUTO position.
7. In OFF position the pump will be disabled.
8. In the AUTO position the pump will start up automatically as the load increases on the lead pump past the current setpoint.
9. The lag lag pump is controlled by the HAND-OFF-AUTO switch on the panel.
10. In HAND position the pump will run at full speed until it is switched to OFF or AUTO position.
11. In OFF position the pump will be disabled.
12. In the AUTO position the pump will start up automatically as the load increases on the lag pump past the current setpoint.
13. Designation of lag pump is determined by the selector switch on front of the panel.
14. An external low level switch will disable all pumps.
15. Outputs to the BAS is to include Pump Status and Pump Fault

1008019-2
DUPLEX BOOST ER PUMP

EnviroSep
FLUID & HEAT RECOVERY SYSTEMS
A DIVISION OF TMT, INC.

BILL OF MATERIALS - KEY COMPONENTS
3/21/2011 Rev 1

ITEM #	TAG #	QTY	DESCRIPTION	MANUFACTURER	MODEL #
A1		2	45 gpm @ 195 tdh (2.84 lps @ 5.82 bar) 1500 rpm; 6LL bowl assembly; std wall column assy. (SS shaft), 4" ductile iron discharge head wth NSF Caoting, SS basket strainer, 5 hp US VHS premium efficient TEFC motor, assembled and std. crating, NSF 6010 Approved Coatings.	EnviroSep	6LL
A2		2	1-1/2" Pressure Control/Sustaining Valve with Hydraulic Check, NSF61 Coating	WATTS	115-11
A3		2	2" Isolation Butterfly Valves	Bray	Series 30
B1		2	Pressure Gauges and Isolation Valves	Trerice	700LFB
B2		2	1/2" Pump Drain Valves	Apollo	64
B3		1	1" Carbon Steel Common Drain		
C1		1	UL Listed Industrial Panel 400/3/50		
C2		1	Pressure Switch	IFM	PK6224/EVC004
C3		1	Flow Switch	IFM	SI5010/EVC004
D1		1	3" Bronze Flexible Connector (Ship Loose)		
E1		2	Safety Relief Valve - Set to 150 PSIG	Kunkle	912BDC

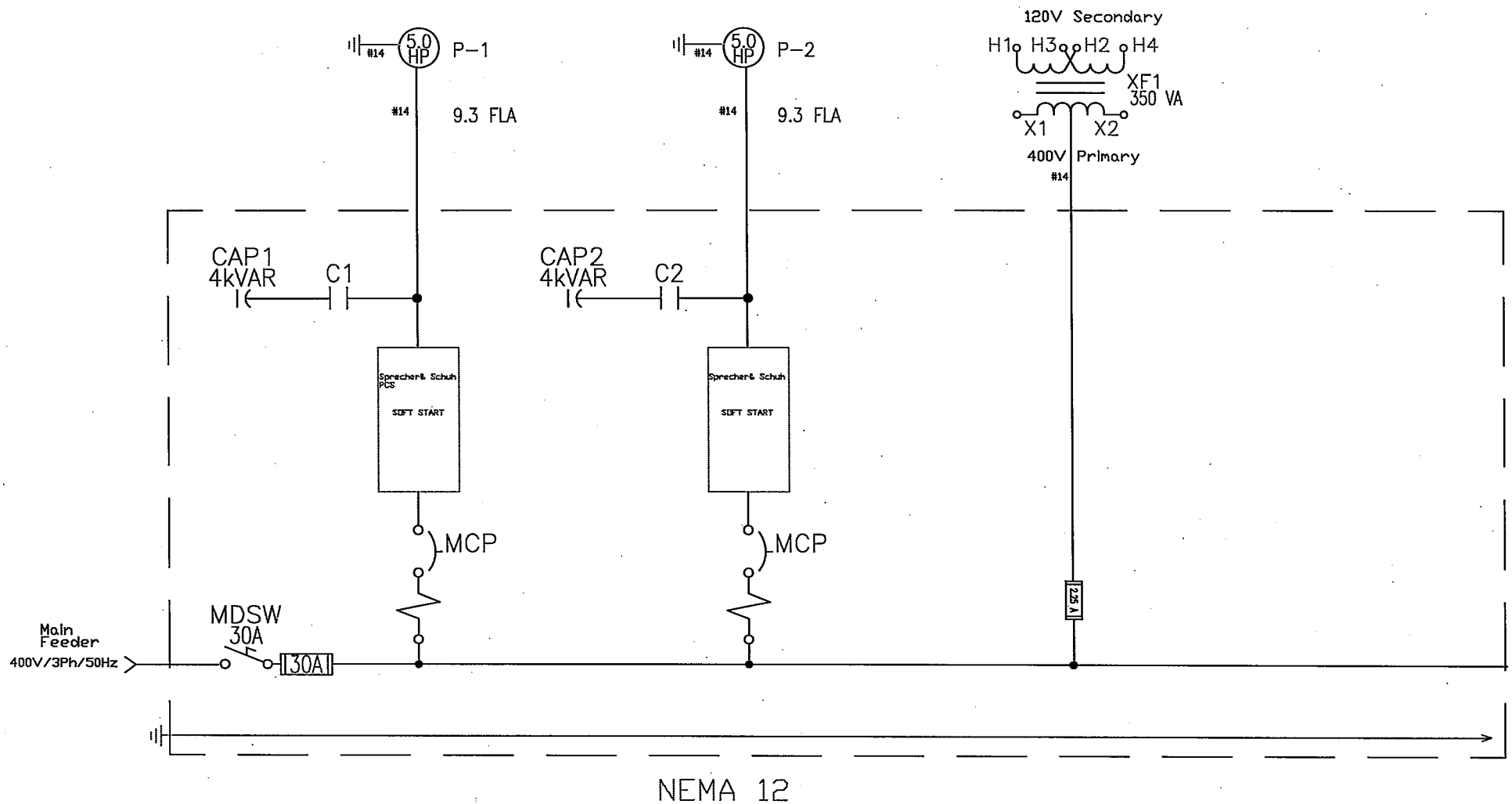

REV #	DESCRIPTION	DATE	BY
1	Changed To Soft Starters And Added PFC Caps	3/16/11	DAW
		DATE	BY

EnviroSep
Fluid & Heat Recovery

Post Office Box 857
Georgetown, South Carolina 29442
Phone (843) 546-7400
Fax (843) 546-7407

DRAWN BY	D. Windham	PROJ. TYPE	COM 2
DATE	OCT 13, 2010	SCALE	JIC
CHECKED BY			
APPROVED BY		DRAWING NUMBER	1008019D-E1
APPROVED BY			

TITLE: Duplex Booster One Line Diagram

SHEET NUMBER: 1 REV. 1

THIS DRAWING IS A PRIVATE AND CONFIDENTIAL COMMUNICATION AND THE PROPERTY OF ENVIROSEP, GEORGETOWN, SOUTH CAROLINA. IT MUST NOT BE COPIED OR LENT WITHOUT CONSENT OF ENVIROSEP AND MUST BE PROMPTLY RETURNED WITH TENDER AND/OR COMPLETION OF ORDER.

FILENAME: 1008019D-E1 REV1.DWG

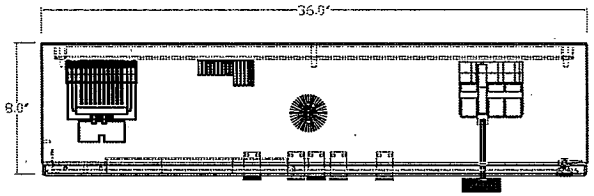

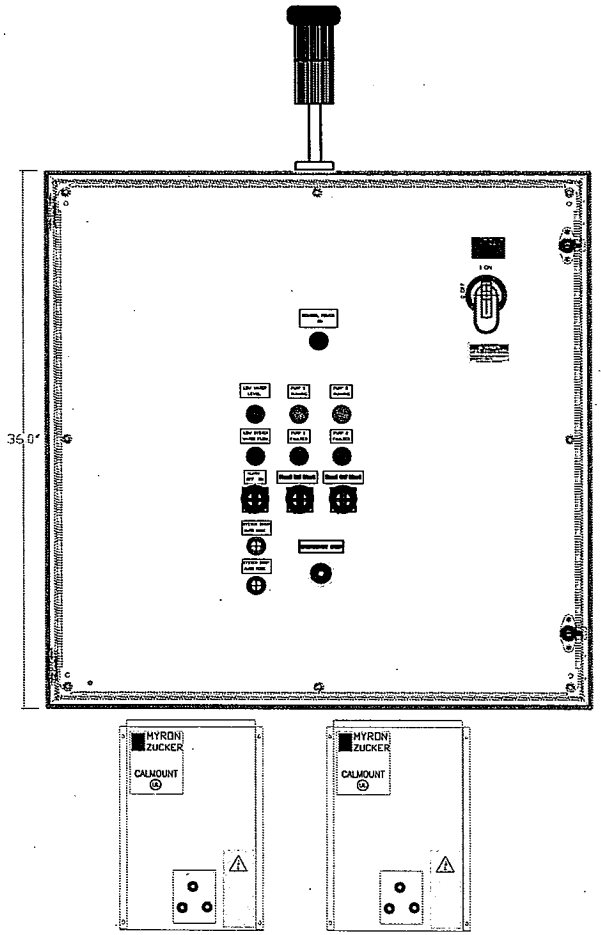

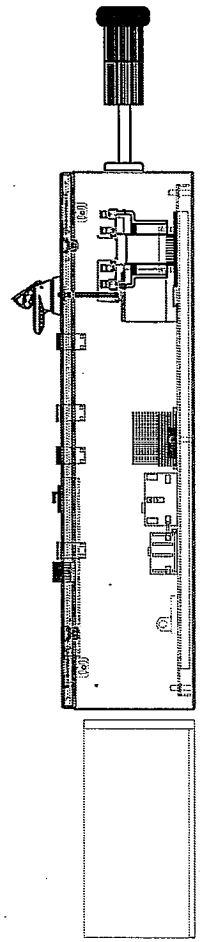

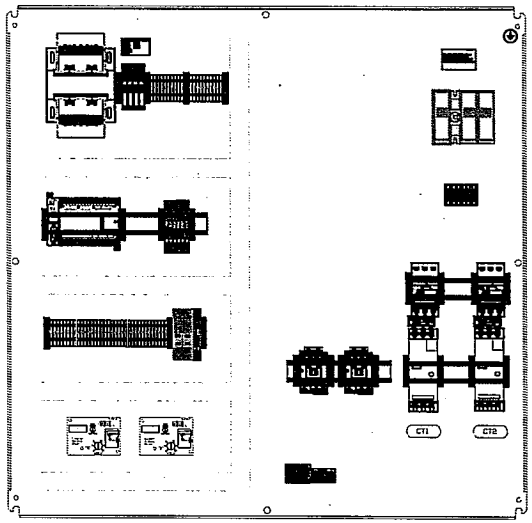

MANUFACTURER	ENVIROSEP
MAXIMUM VOLTAGE	480 VAC
TOTAL FLA	19.0 AMPS
LARGEST MOTOR FLA	9A
PHASE	3 PHASE
FREQUENCY	60 Hz
FIELD WIRING MAXIMUM	BREAK MAIN PANEL
SCCR	5 kA
ENVIRONMENTAL RATING	TYPE 12

DANGER

Arc Flash And Shock Hazard
Appropriate PPE Required
Follow all safety procedures
in accordance to NFPA 70E
and wear proper PPE
Failure to comply can result
in serious injury or death.

Fuse Replacement Chart

F1=30A	F7=1A
F2=30A	F8=1A
F3=30A	F9=1A
F4=2.25A	
F5=2.25A	
F6=5A	

WARNING
To Maintain Over Current, Ground Fault, and Ground Fault Protection, The Manufacturer's Instructions For Selection of Overload And Short Circuit Protection Must Be Followed To Reduce The Risk Of Fire Or Electric Shock

See Electrical Drawings For Conductor Type, Temperature Rating, And Required Tightening Torque

WARNING
If An Overload Or A Fault Current Interruption Occurs, Circuits Must Be Checked To Determine The Cause Of The Interruption. If A Fault Condition Exists The Current-Carrying Components Should Be Examined And Replaced If Damaged, And The Integral Current Sensors Must Be Replaced To Reduce The Risk Of Fire Or Electric Shock

NEMA 12

REV #	DESCRIPTION	DATE	BY
1	Change Contactors To Soft Starts And Added PFC Caps.	3/16/11	DAW

EnviroSep
Fluid & Heat Recovery
Post Office Box 857
Georgetown, South Carolina 29442
Phone (843) 546-7400
Fax (843) 546-7407

DRAWN BY D. Windham	PROJ. TYPE COM 2	TITLE	Duplex Booster Panel Layout
DATE OCT 12, 2010	SCALE 1=1		
CHECKED BY			
APPROVED BY	DRAWING NUMBER 1008019D-E2	SHEET NUMBER 1	REV. 1
APPROVED BY			

THIS DRAWING IS A PRIVATE AND CONFIDENTIAL COMMUNICATION AND THE PROPERTY OF ENVIROSEP, GEORGETOWN, SOUTH CAROLINA. IT MUST NOT BE COPIED OR LENT WITHOUT CONSENT OF ENVIROSEP AND MUST BE PROMPTLY RETURNED WITH TENDER AND/OR COMPLETION OF ORDER.

FILENAME: 1008019D-E2 REV1.DWG

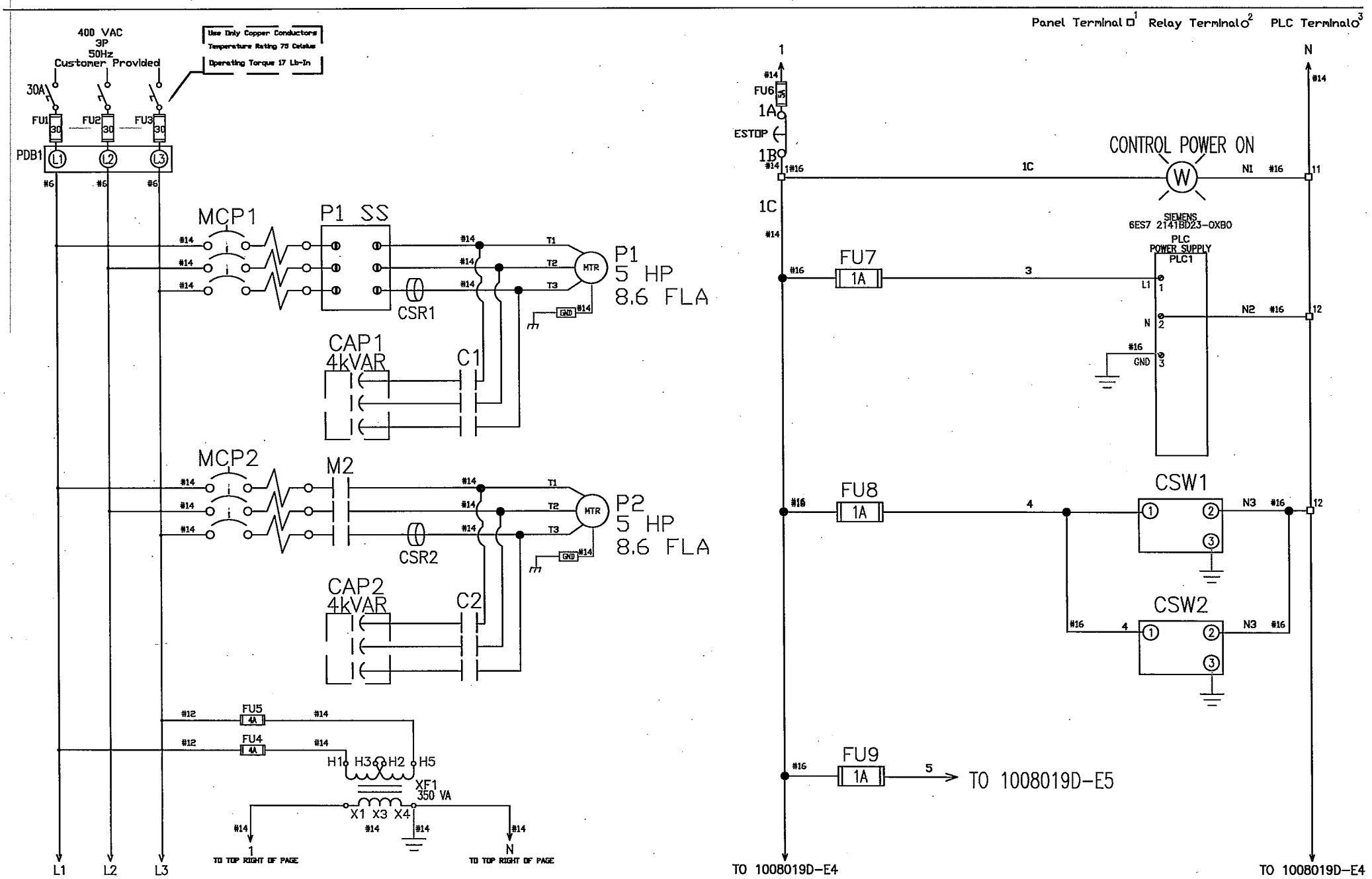

REV #	DESCRIPTION	DATE	BY
1	Changed To Soft Starters And Added PFC Caps	3/16/11	DAW

EnviroSep
Fluid & Heat Recovery

Post Office Box 857
Georgetown, South Carolina 29442
Phone (843) 546-7400
Fax (843) 546-7407

DRAWN BY D. Windham	PROJ. TYPE COM 2	TITLE	Duplex Booster Power Distrubition & Controls
DATE OCT 19, 2010	SCALE JIC		
CHECKED BY			
APPROVED BY	DRAWING NUMBER 1008019D-E3	SHEET NUMBER 1	REV. 1
APPROVED BY			

THIS DRAWING IS A PRIVATE AND CONFIDENTIAL COMMUNICATION AND THE PROPERTY OF ENVIROSEP, GEORGETOWN, SOUTH CAROLINA. IT MUST NOT BE COPIED OR LENT WITHOUT CONSENT OF ENVIROSEP AND MUST BE PROMPTLY RETURNED WITH TENDER AND/OR COMPLETION OF ORDER.

FILENAME: 1008019D-E3 REV1.DWG

Panel Terminal □[1] Relay Terminal ○[2]

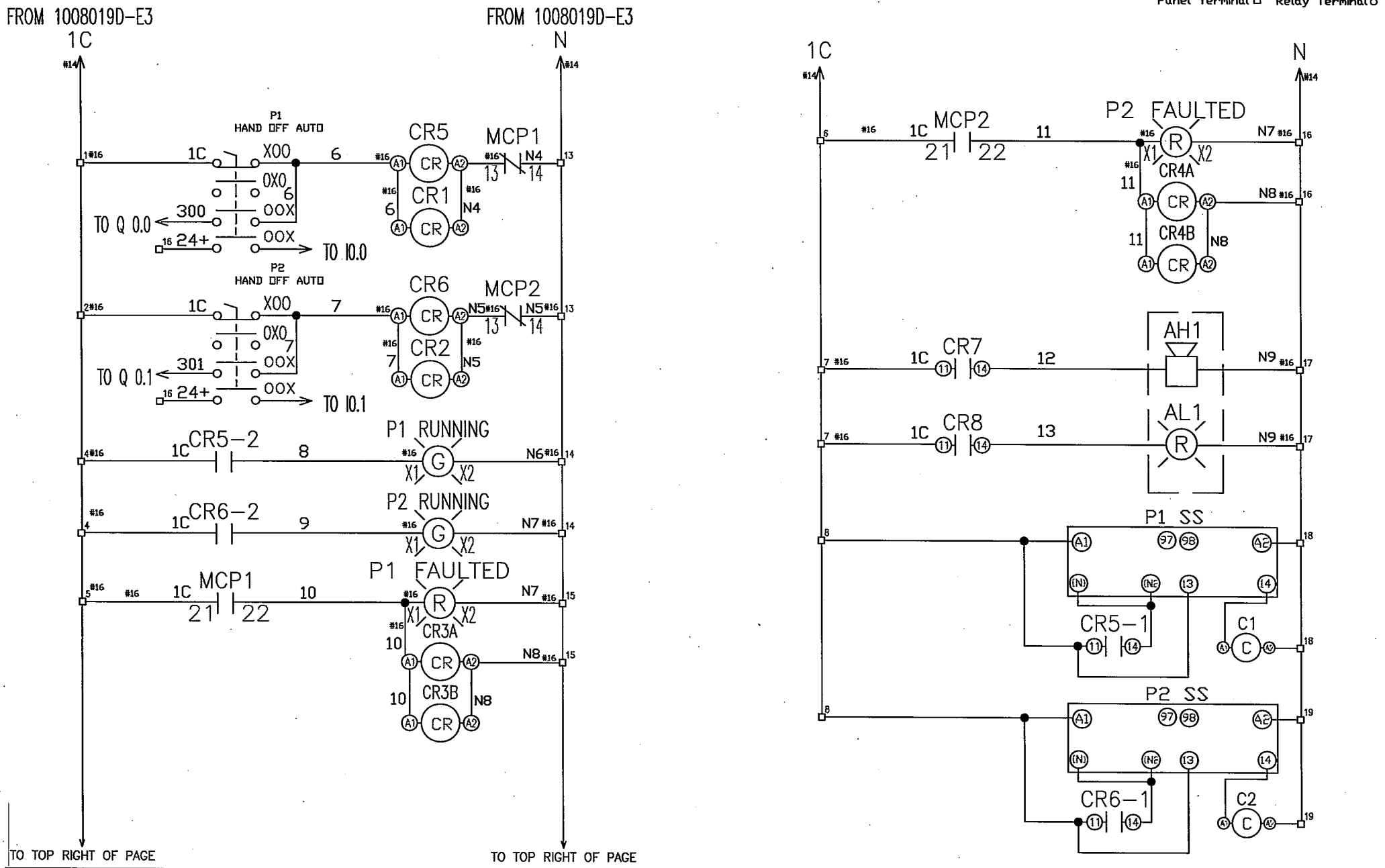

REV #	DESCRIPTION	DATE	BY
1	Changed To Soft Starters And Added PFC Caps	3/16/11	DAW

EnviroSep
Fluid & Heat Recovery
Post Office Box 857
Georgetown, South Carolina 29442
Phone (843) 546-7400
Fax (843) 546-7407

DRAWN BY D. Windham	PROJ. TYPE COM 2	TITLE Duplex Booster Controls CONT.	
DATE OCT 19, 2010	SCALE JIC		
CHECKED BY			
APPROVED BY	DRAWING NUMBER 1008019D-E4	SHEET NUMBER 1	REV. 1
APPROVED BY			

THIS DRAWING IS A PRIVATE AND CONFIDENTIAL COMMUNICATION AND THE PROPERTY OF ENVIROSEP, GEORGETOWN, SOUTH CAROLINA. IT MUST NOT BE COPIED OR LENT WITHOUT CONSENT OF ENVIROSEP AND MUST BE PROMPTLY RETURNED WITH TENDER AND/OR COMPLETION OF ORDER.

FILENAME: 1008019D-E4 REV1.DWG

Panel Terminal □[1] Relay Terminal○[2]

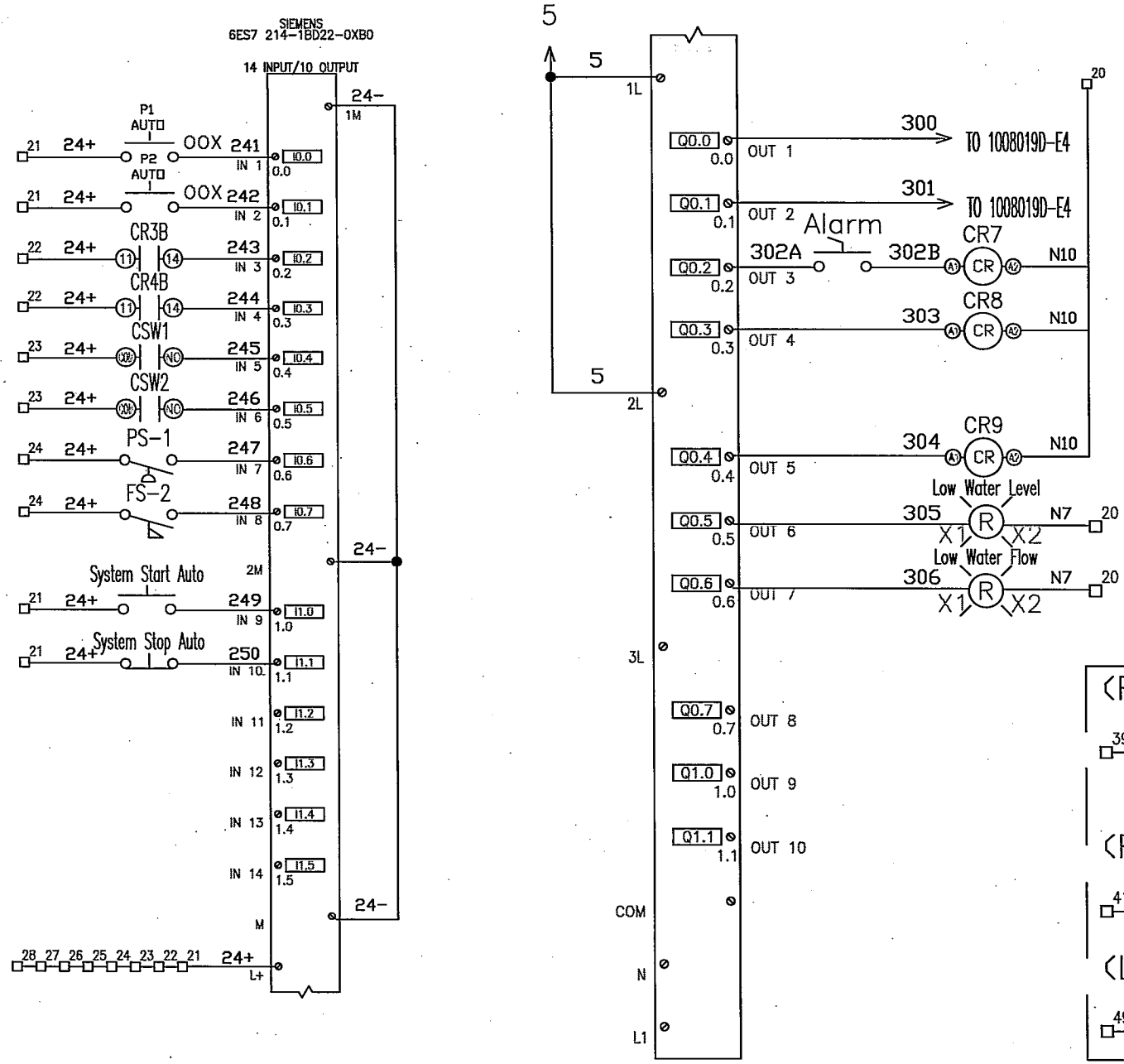

REV #	DESCRIPTION	DATE	BY

EnviroSep
Fluid & Heat Recovery

Post Office Box 857
Georgetown, South Carolina 29442
Phone (843) 546-7400
Fax (843) 546-7407

DRAWN BY D. Windham	PROJ. TYPE COM 2	TITLE Duplex Booster PLC I/O	
DATE OCT 19, 2010	SCALE JIC		
CHECKED BY			
APPROVED BY	DRAWING NUMBER 1008019D-E5	SHEET NUMBER 1	REV. 0
APPROVED BY			

THIS DRAWING IS A PRIVATE AND CONFIDENTIAL COMMUNICATION AND THE PROPERTY OF ENVIROSEP, GEORGETOWN, SOUTH CAROLINA. IT MUST NOT BE COPIED OR LENT WITHOUT CONSENT OF ENVIROSEP AND MUST BE PROMPTLY RETURNED WITH TENDER AND/OR COMPLETION OF ORDER.

FILENAME: 1008019D-E5.DWG

Name:

Date: 10/7/2010

EnviroSep
FLUID & HEAT RECOVERY SYSTEMS
A DIVISION OF TMT, INC.

Pump:

Size: 6LL 6.25 in OD (17 stage)

Type: Vertical
Synch speed: 1500 rpm

Speed: 1450 rpm
Dia: 4.22 in

Curve: 6LL

Impeller: 6LL SS ENCL

Specific Speeds:

Ns: ---
Nss: ---

Dimensions:

Suction: 4 in
Discharge: 4 in

Vertical Turbine:

Bowl size: 5.88 in
Max lateral: 0.25 in
Thrust K factor: 2.1 lb/ft

Pump Limits:

Temperature: 140 °F
Pressure: 300 psi g
Sphere size: 0.25 in

Power: 75 hp
Eye area: ---

Search Criteria:

Flow: ---

Head: ---

Fluid:

Water
Density: 62.37 lb/ft³
Viscosity: 1.105 cP

Temperature: 60 °F
Vapor pressure: 0.2563 psi a
Atm pressure: 14.7 psi a

NPSHa: ---

Motor:

Standard: NEMA
Enclosure: TEFC
Sizing criteria: Max Power on Design Curve

Size: 5 hp
Speed: 1500
Frame: 184T

---- Data Point ----

Flow:	46.6 US gpm
Head:	206 ft
Eff:	60.1%
Power:	4.04 hp
NPSHr:	1.57 ft

---- Design Curve ----

Shutoff head:	247 ft
Shutoff dP:	107 psi
Min flow:	15.8 US gpm

BEP: 76% @ 78.9 US gpm

NOL power:
4.41 hp @ 84.1 US gpm

-- Max Curve --

Max power:
4.41 hp @ 84.1 US gpm

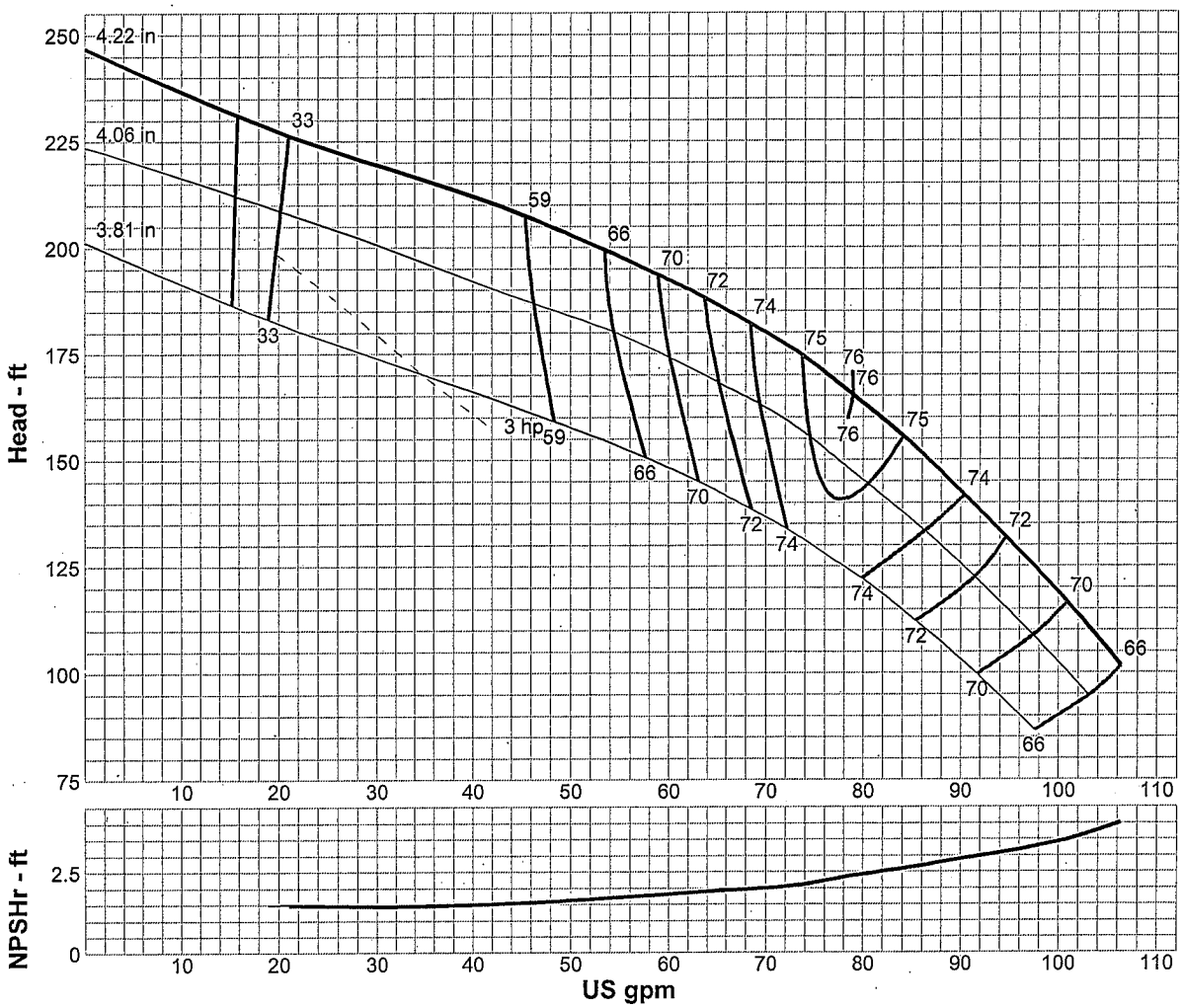

Performance Evaluation:

Flow US gpm	Speed rpm	Head ft	Efficiency %	Power hp	NPSHr ft
102	1450	113	69.2	4.23	3.6
85.1	1450	153	74.8	4.41	2.66
68.1	1450	183	73.9	4.26	1.96
51.1	1450	202	64	4.07	1.66
34	1450	216	46.9	3.86	1.52

EMERSON
Motor Technologies

EMERSON MOTOR COMPANY

8100 WEST FLORISSANT AVE.
ST. LOUIS, MO 63136

DATE: 10/14/2010

P.O. NO.: 5HP RFQ
Order/Line NO.: 751880 IN 100

TO: Hydroflo Pumps - Parent Account *
7118 Loblolly Pine Blvd.
Fairview, TN, 37062
ATTN: DAVID

Model Number: NA
Catalog Number: NA
Vertical Motor Information
180/210 AURU,TU,LU
LLC,VERTICAL MOTOR INFO

REVISIONS:

MARKS: 180/210 AURU,TU,LU

ALL DOCUMENTS HEREIN ARE CONSIDERED CERTIFIED BY US ELECTRICAL MOTORS.
THANK YOU FOR YOUR ORDER AND THE OPPORTUNITY TO SERVE YOU.

Features:

```
Temporary - DO NOT COPY
Horsepower ............... 00005.00~00000.00 ~ KW: 3.73
Enclosure ................ TEFC
Poles .................... 04~00 ~ RPM: 1500~0
Frame Size ............... 184~TP
Phase/Frequency/Voltage.. 3~050~400 ~ Random Wound
Service Factor ........... 1.00
Insulation Class ......... Class "F" ~ Insulife 1000
Altitude In Feet (Max) .. 3300 Ft.(1000 M) ~ +40 C
Efficiency Class ......... Premium Efficiency
Application .............. Vertical Centrifugal Pump
Customer Part Number ....
10" Base ~ Coupling Size: To Be Supplied At Order Entry
Non-Reverse Ratchet ~ Steady Bushing Not Requested
Pricebook Thrust Value (lbs).. 1800
Customer Down Thrust (lbs) ... 1800
Customer Shutoff Thrust (lbs).
Up Thrust (lbs): ~
Temperature Rise (Sine Wave): "B" Rise @ 1.0 SF (Resist)
Starting Method ......... Direct-On-Line Start
Duty Cycle ............... Continuous Duty
Load Inertia (lb-ft2): NEMA ~ NEMA Inertia: 42.00 ~ 1.00
Number Of Starts Per Hour: NEMA
Motor Type Code ............ TUS
Rotor Inertia (LB-FT²)        .483 LB-FT²
Qty. of Bearings PE (Shaft)   1
Qty. of Bearings SE (OPP)     1
Bearing Number PE (Shaft)     7309 BEP
Bearing Number SE (OPP)       6208-2Z-J/C3
```

Emerson Motor Company is a division of Emerson Electric Co.
The Emerson logo is a trademark and service mark of Emerson Electric Co.

EMERSON
Motor Technologies

EMERSON MOTOR COMPANY

8100 WEST FLORISSANT AVE.
ST. LOUIS, MO 63136

DATE: 10/14/2010

P.O. NO.: 5HP RFQ
Order/Line NO.: 751880 IN 100

TO:

ATTN:

Model Number: NA
Catalog Number: NA
Vertical Motor Information
180/210 AURU,TU,LU
LLC,VERTICAL MOTOR INFO

REVISIONS:

MARKS: 180/210 AURU,TU,LU

ALL DOCUMENTS HEREIN ARE CONSIDERED CERTIFIED BY US ELECTRICAL MOTORS.
THANK YOU FOR YOUR ORDER AND THE OPPORTUNITY TO SERVE YOU.

Accessories:
Counter CW Rotation FODE

USE THE DATA PROVIDED BELOW TO SELECT THE APPROPRIATE DIMENSION PRINT

Horsepower	5
Pole(s)	04
Voltage(s)	400
Frame Size	184TP
Outlet Box AF	3.19
Outlet Box AA	1.00

US MOTORS

Emerson Motor Company is a division of Emerson Electric Co.
The Emerson logo is a trademark and service mark of Emerson Electric Co.

EFFECTIVE: 17-MAR-04	VERTICAL MOTORS	PRINT: 09-2296
SUPERSEDES: 29-AUG-01	TOTALLY ENCLOSED FAN COOLED FRAME: 182 THRU 215TP TYPE: TU, TUE, TUS, TUI	SHEET: 1 OF 1

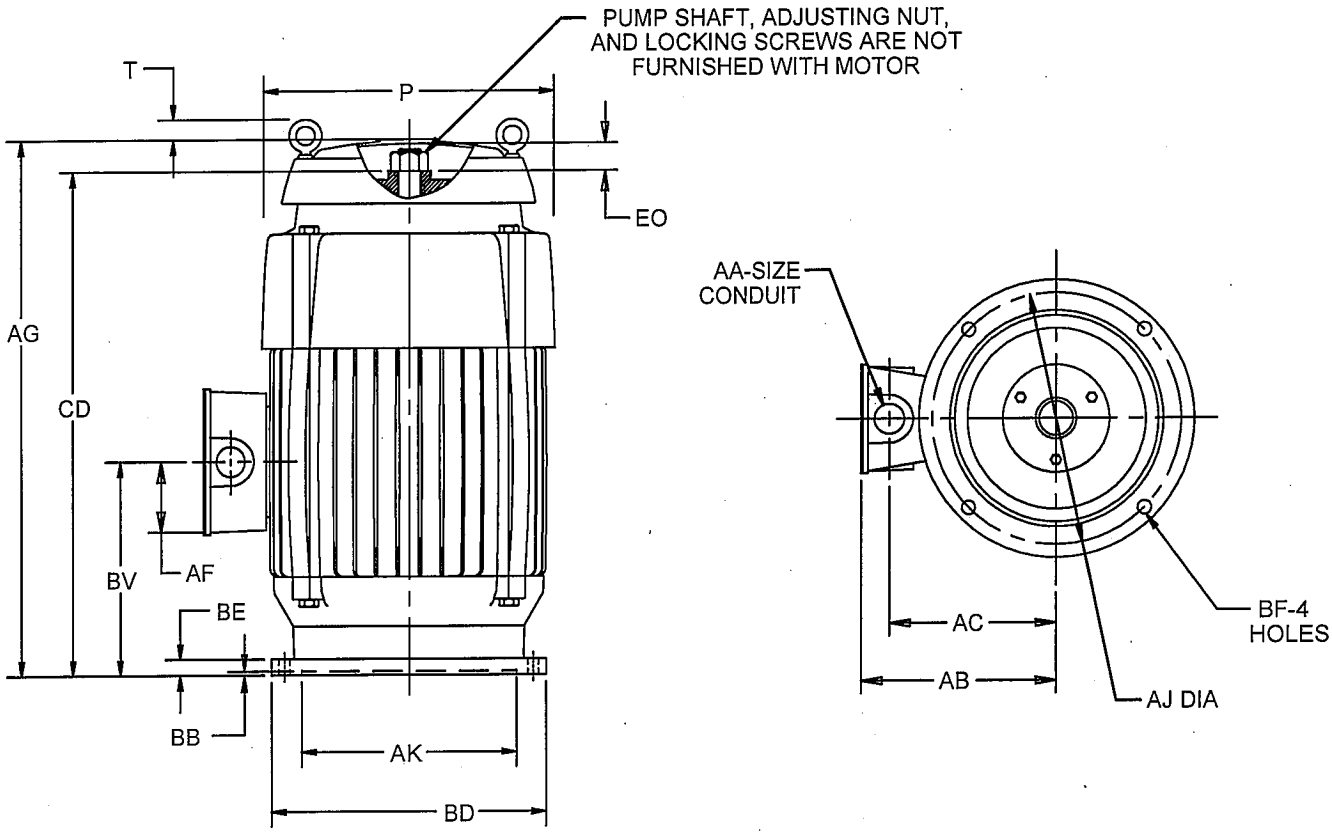

ALL DIMENSIONS ARE IN INCHES AND MILLIMETERS

UNITS	P [2]	T	AA	AB	AC	AF	AG	AJ
IN	12.88	1.50	1.00	7.88	6.63	3.19	21.25	9.125
MM	327	38		200	168	81	539	231.78

UNITS	AK +.003	BB MIN	BD MAX	BE	BF	BV	CD	EO
IN	8.250	.19	10.00	.75	.44	8.00	17.56	3.31
MM	209.55	5	254	19	11	203	446	84

TOLERANCES	
FACE RUNOUT PERMISSIBLE	.004 F.I.R.
ECCENTRICITY OF MOUNTING RABBET	.004 F.I.R.

1: ALL ROUGH DIMENSIONS MAY VARY BY .25" DUE TO CASTING AND/OR FABRICATION VARIATIONS.
2: LARGEST MOTOR WIDTH.
3: CONDUIT OPENINGS MAY BE LOCATED IN STEPS OF 90 DEGREES REGARDLESS OF LOCATION. STANDARD AS SHOWN WITH CONDUIT OPENING DOWN.
4: TOLERANCES SHOWN ARE IN INCHES ONLY.

NAMEPLATE DATA

CATALOG NUMBER:				NAMEPLATE PART #:	460316-004
MODEL		FR	184TP	TYPE	TUS
				ENCL	TE
SHAFT END BRG	7309 BEP - QTY 1			OPP END BRG	6208-2Z-J/C3 - QTY 1
PH	3	MAX AMB	40 C	ID#	(ref: Order#: 751880, Type: IN, Line#: 100)
INSUL CLASS	F	Asm. Pos.		DUTY	CONT

HP	5	RPM	1460	HP		RPM	
VOLTS	400			VOLTS			
FL AMPS	7.4			FL AMPS			
SF AMPS				SF AMPS			
SF	1.00	DESIGN	B	SF		DESIGN	
		CODE	G			CODE	
NEMA NOM EFFICIENCY	88.5	NOM PF	82.8	NEMA NOM EFFICIENCY		NOM PF	
		KiloWatt	3.730				
GUARANTEED EFFICIENCY	86.5	MAX KVAR	1.9	GUARANTEED EFFICIENCY		MAX KVAR	
		HZ	50			HZ	

UL DATA (IF APPLICABLE):

DIVISION		CLASS I		GROUP I	
TEMP CODE		CLASS II		GROUP II	

VFD DATA (IF APPLICABLE):

VOLTS			
AMPS			
TORQUE 1		TORQUE 2	
VFD LOAD TYPE 1		VFD LOAD TYPE 2	
VFD HERTZ RANGE 1		VFD HERTZ RANGE 2	
VFD SPEED RANGE 1		VFD SPEED RANGE 2	
SERVICE FACTOR		FL SLIP	
NO. POLES	4	MAGNETIZING AMPS	3.2
VECTOR MAX RPM		Encoder PPR	
Radians / Seconds	1	Encoder Volts	

TEAO DATA (IF APPLICABLE):

HP (AIR OVER)		HP (AIR OVER M/S)		RPM (AIR OVER)		RPM (AIR OVER M/S)	
FPM AIR VELOCITY		FPM AIR VELOCITY M/S		FPM AIR VELOCITY SEC			

ADDITIONAL NAMEPLATE DATA:

Decal / Plate	WD=499495	Customer PN	
Notes		Non Rev Ratchet	NRR
Max Temp Rise	80C RISE/RES@1.00SF	OPP/Upper Oil Cap	GREASE
Thermal (WDG)		SHAFT/Lower Oil Cap	GREASE
Altitude			
EPACT Note		EPACT Compliance	
COS		Marine Duty	
Balance	0.08 IN/SEC	Arctic Duty	
3/4 Load Eff.	89.9	Inrush Limit	
Motor Weight	170	Direction of Rotation	
Sound Level		Special Note 1	
Vertical Thrust	1800	Special Note 2	
Thrust Percentage		Special Note 3	
Bearing Life		Special Note 4	
Starting Method		Special Note 5	
Number of Starts		Special Note 6	
200/208V 60Hz Max Amps		SH Max. Temp.	
190V 50 hz Max Amps		SH Voltage	
380V 50 Hz Max Amps		SH Watts	
NEMA Inertia		Load Inertia	
Sumpheater Voltage		Sumpheater Wattage	
Special Accessory Note 1		Special Accessory Note 16	
Special Accessory Note 2		Special Accessory Note 17	
Special Accessory Note 3		Special Accessory Note 18	
Special Accessory Note 4		Special Accessory Note 19	
Special Accessory Note 5		Special Accessory Note 20	
Special Accessory Note 6		Special Accessory Note 21	
Special Accessory Note 7		Special Accessory Note 22	
Special Accessory Note 8		Special Accessory Note 23	
Special Accessory Note 9		Special Accessory Note 24	
Special Accessory Note 10		Special Accessory Note 25	
Special Accessory Note 11		Special Accessory Note 26	
Special Accessory Note 12		Special Accessory Note 27	
Special Accessory Note 13		Special Accessory Note 28	
Special Accessory Note 14		Special Accessory Note 29	
Special Accessory Note 15		Special Accessory Note 30	

EMERSON
Motor Technologies

EMERSON MOTOR COMPANY
ST. LOUIS, MO

MOTORS UP

TYPICAL NAMEPLATE DATA
ACTUAL MOTOR NAMEPLATE LAYOUT MAY VARY
SOME FIELDS MAY BE OMITTED

MOTOR PERFORMANCE

MODEL NO.	CATALOG NO.	PHASE	TYPE	FRAME
NA	NA	3	TUS	184TP

ORDER NO.	751880	LINE NO.	100

MPI:	131980
HP:	5
POLES:	4
VOLTS:	400
HZ:	50
SERVICE FACTOR:	1.00
EFFICIENCY (%):	
S.F.	
FULL	88.5
3/4	89.9
1/2	89.5
1/4	84.7
POWER FACTOR (%):	
S.F.	
FULL	82.8
3/4	77.6
1/2	67.2
1/4	44.9
NO LOAD	6.3
LOCKED ROTOR	49.9
AMPS:	
S.F.	
FULL	7.4
3/4	5.8
1/2	4.5
1/4	3.5
NO LOAD	3.2
LOCKED ROTOR	42
NEMA CODE LETTER	G
NEMA DESIGN LETTER	B
FULL LOAD RPM	1460
NEMA NOMINAL EFFICIENCY (%)	88.5
GUARANTEED EFFICIENCY (%)	86.5
MAX KVAR	1.9
AMBIENT (°C)	40
ALTITUDE (FASL)	3300
SAFE STALL TIME-HOT (SEC)	25
SOUND PRESSURE (DBA @ 1M)	56
TORQUES:	
BREAKDOWN{% F.L.}	270
LOCKED ROTOR{% F.L.}	197
FULL LOAD{LB-FT}	18

The Above Data Is Typical, Sinewave Power Unless Noted Otherwise

EMERSON.
Motor Technologies

EMERSON MOTOR COMPANY
ST. LOUIS, MO

MOTORS

Motor Wiring Diagram

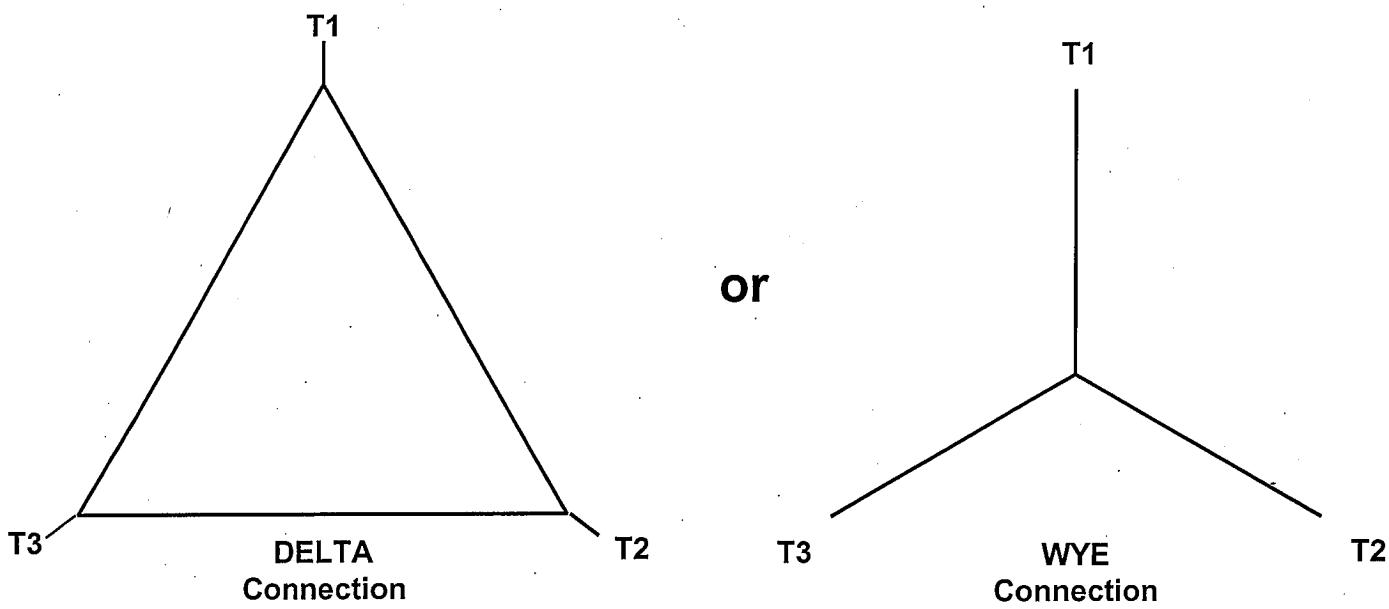

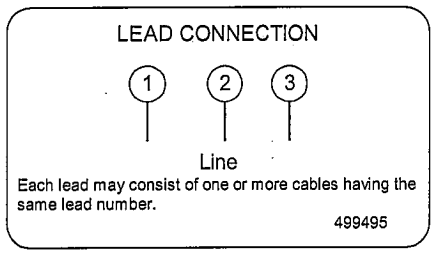

To reverse direction of rotation interchange connections L1 and L2.

Each lead may be comprised of one or more cables.
Each cable will be marked with the appropriate lead number.

EFFECTIVE: 2/27/96
SUPERCEDES: X736618, 96441, 179879, 284138
Connection Plate: 499495
Connection Decal: 912113

RENEWAL PARTS

FRAMES 182 THRU 215 - OPEN DRIPPROOF
FRAMES 182 THRU 286 - TOTALLY ENCLOSED
TYPES: AU, AUE, AUI, JU, LU, LUCS, LUS, TU, TUC, TUCI, TUCS, TUE, TUI, TUS

HIGH THRUST HOLLOSHAFT MOTORS

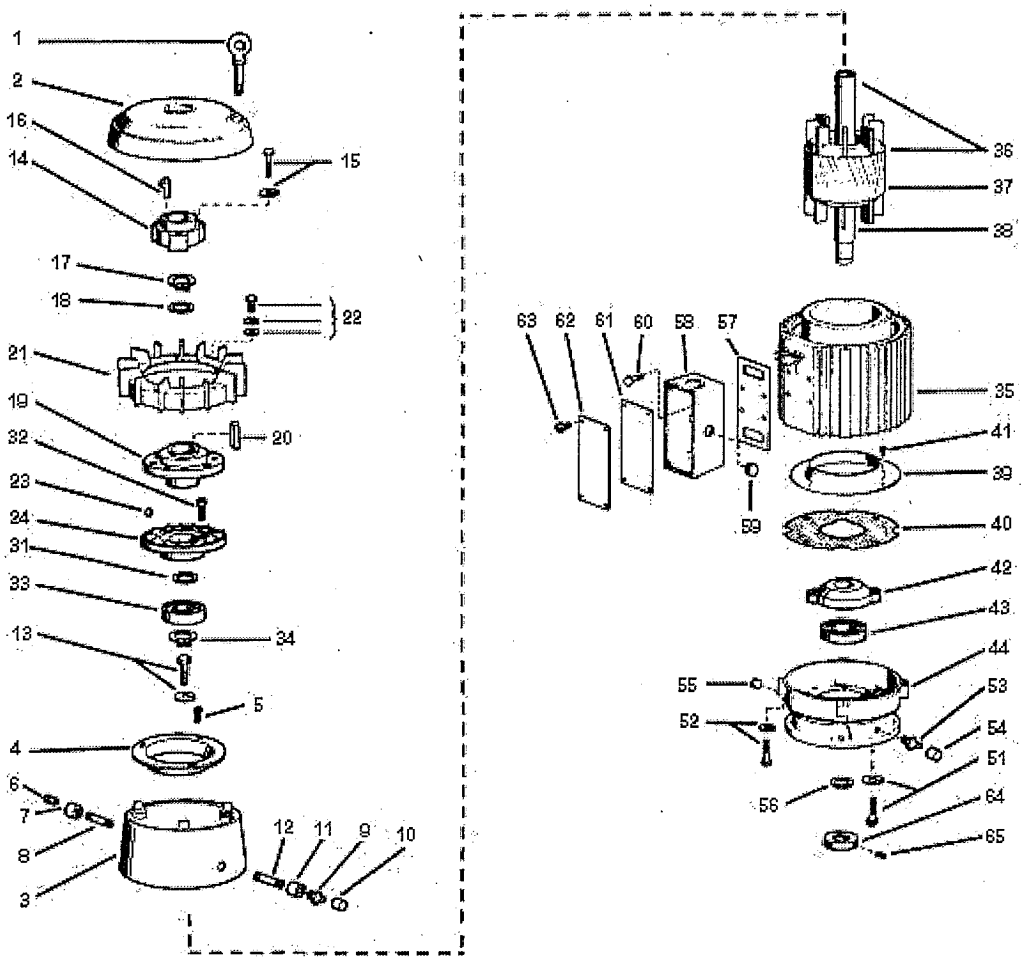

ITEM NO.	QTY	NAME OF PART
1	2	Eyebolt
2	1	Canopy Cap
3	1	Upper Bracket
4	1	Air Deflector (Upper)
5	3	Screw (Air Deflector)
6	1	Pipe Plug
7	1	Pipe Coupling
8	1	Nipple Fitting
9	1	Grease Fitting

10	1	Plastic Cap

WARNING:
Any disassembly or repair work on explosionproof motors will void the Underwriters Laboratories, Inc. label unless done by the manufacturer, or a facility approved by the Underwriters Laboratories, Inc. Refer to your nearest U.S. Elecrical Motors office for assistance.

BEARINGS:
Refer to motor nameplate for the bearing numbers.

PRICES:
Parts stocking distributors: refer to USEM renewal parts numerical index. All Others: refer to your nearest USEM parts distributor.

reference: Renewal Parts Section 700, Pages 145 & 146

RENEWAL PARTS

FRAMES 182 THRU 215 - OPEN DRIPPROOF
FRAMES 182 THRU 286 - TOTALLY ENCLOSED
TYPES: AU, AUE, AUI, JU, LU, LUCS, LUS, TU, TUC, TUCI, TUCS, TUE, TUI, TUS

HIGH THRUST HOLLOSHAFT MOTORS

ITEM NO.	QTY	NAME OF PART
11	1	Pipe Coupling
12	1	Nipple Fitting
13	4	Screw & Lockwasher (Bracket to Stator)
14	1	Drive Coupling
15	3	Screw & Lockwasher (Drive Coupling)
16	1	Gib Key
17	1	Snap Ring
18	As Req	Shims
19	1	Rotating Ratchet
20	1	Square Key
21	1	Fan
22	5	Screw, Washer & Lockwasher (Fan to Ratchet)
23	10	Steel Ball
24	1	Stationary Ratchet
25-30	-	NOT USED THIS ASSEMBLY
31	As Req	Shims
32	3	Screw (Stationary Ratchet)
33	1	Ball Bearing (Upper) (Refer to Section 775)
34	1	Snap Ring
35	1	Wound Stator Assembly
36	1	Rotor Assembly (Includes items 37 & 38)
37	1	Rotor Core
38	1	Rotor Shaft

ITEM NO.	QTY	NAME OF PART
39	1	Air Deflector (Lower)
40	1	Bracket Screen (AU Only)
41	4	Screw (Air Deflector)
42	1	Bearing Cap (Lower)
43	1	Ball Bearing (Lower) (Refer to Section 775)
44	1	Lower Bracket
45-50	-	NOT USED THIS ASSEMBLY
51	2	Screw & Lockwasher (Bearing Cap)
52	4	Screw & Lockwasher (Bracket to Stator)
53	1	Grease Fitting
54	1	Plastic Cap (Not Illustrated)
55	1	Pipe Plug
56	1	Water Deflector
57	1	Gasket (Outlet Box Base)
58	1	Outlet Box Base
59	1	Pipe Plug
60	4	Screw
61	1	Gasket (Outlet Box Cover)
62	1	Outlet Box Cover
63	4	Screw
64*	1	Stabilizer Bushing (Optional)
65*	2	Screw (Optional)

* With optional Stabilizer Bushing, delete Item No. 56 and add Items 64 & 65

WARNING:
Any disassembly or repair work on explosionproof motors will void the Underwriters Laboratories, Inc. label unless done by the manufacturer, or a facility approved by the Underwriters Laboratories, Inc. Refer to your nearest U.S. Elecrical Motors office for assistance.

BEARINGS:
Refer to motor nameplate for the bearing numbers.

PRICES:
Parts stocking distributors: refer to USEM renewal parts numerical index. All Others: refer to your nearest USEM parts distributor.

reference: Renewal Parts Section 700, Pages 145 & 146

Copyright © 2005 Emerson Electric Co. All rights reserved

TYPICAL REED CRITICAL FREQUENCY DATA

USEM MODEL NO: NA
USEM CATALOG NO: NA

Frame: 184TP Type: TUS

REED CRITICAL FREQUENCY:	95	HZ
CENTER OF GRAVITY:	9	IN
DEFLECTION @ CENTER OF GRAVITY:	0.0011	IN
UNIT WEIGHT:	135	LBS.
BASE DIAMETER:	ALL	IN.
MAXIMUM MOTOR DIAMETER:	12.88	IN.
DATE:	10/14/2010	

Home Email

Copyright © 2000 U.S. Electrical Motors, All rights reserved

Modes of Operation (Standard)

Soft Start

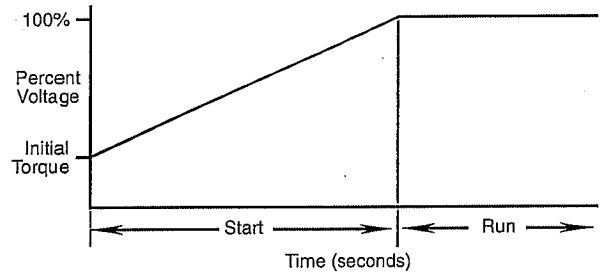

This method has the most general application. The motor is raised from an initial torque value to full voltage. Initial torque is adjustable to 15%, 25%, 35% or 65% locked rotor torque. The motor voltage is gradually increased during the acceleration ramp time, which can be adjusted from 2, 5, 10, 15, 20, 25 or 30 seconds.

Soft Start with Selectable Kickstart

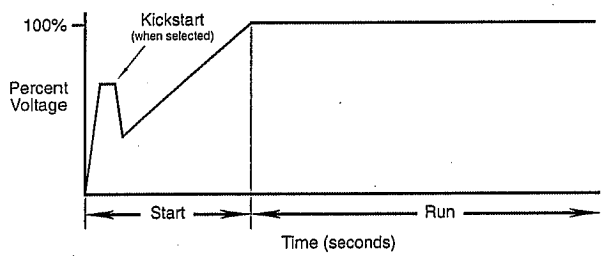

During the Soft Start phase, an initial kickstart or boost can be provided. This supplies a current pulse of 450% of full load current and is adjustable from 0.5 to 1.5 seconds. This allows the motor to develop additional torque for starting high inertia loads.

Current Limit Starting

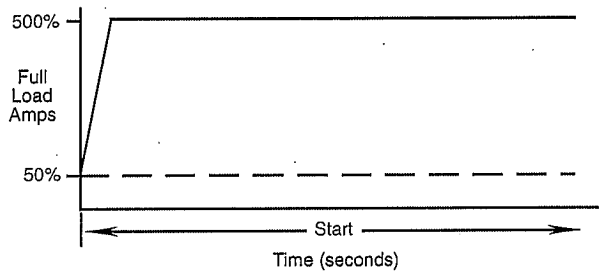

This starting mode is used when it is desired to limit the maximum starting current (inrush). It can be adjusted for 150%, 250%, 350% or 450% of full load amps. Start times are selectable from 2, 5, 10, 15, 20, 25 or 30 seconds. If the motor is not up to speed after the selected time elapses, the controller transitions to full voltage.

Soft Stop

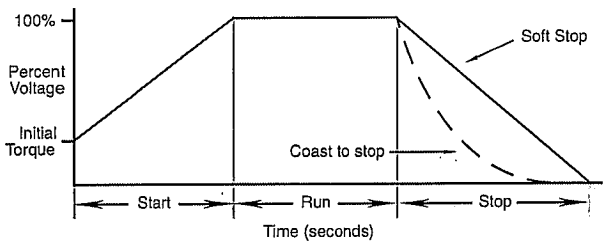

Soft Stop can be used for applications requiring an extended coast-to-rest, such as frictional type loads that tend to stop suddenly when voltage is removed from the motor. When enabled, the voltage ramp down time is equal to one, two or three times the start time selected. The load stops when the motor voltage drops to a point where the load torque is greater than the motor torque.

Models 912, 913, 918, 919 ASME Section VIII, Steam/Air/Gas/ Liquid, 'UV' National Board Certified. Also available for Vacuum Service

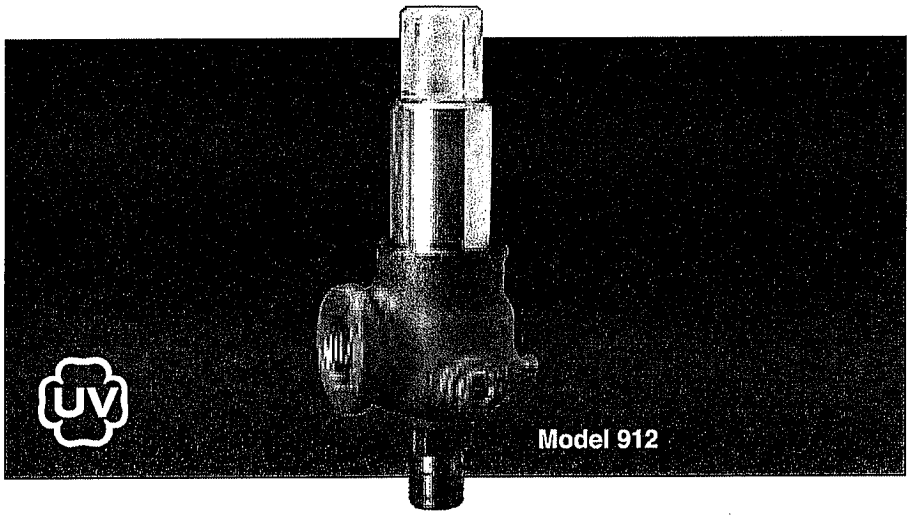

Pressure and Temperature Limits

Models 912, 913, 918, 919: – Steam
3 to 250 psig [-20 to 17 barg][1]
-60° to 406°F [-51° to 208°C]

Models 912, 918: – Air/Gas/Liquid
3 to 300 psig [-20 to 21 barg]
-60° to 406°F [-51° to 208°C]

Models 913, 919: – Air/Gas/Liquid
3 to 900 psig [-20 to 62 barg]
-60° to 406°F [-51° to 208°C]

Vacuum – 6- through 29-inch HG
[200 through 1000 mbarg] – 300°F [149°C]

Maximum back pressure 50 psig [3 barg]
- threaded cap and packed lever

Applications

- Air/gas compressors - intercoolers - aftercoolers.
- Liquid filled pressure vessels/systems - ASME Section VIII (UV).
- Pressure vessels - containing gas, air, liquid or steam. Including tanks and receivers.
- Vacuum systems including pumps, tanks and equipment.
- Optional materials for low temperature - cryogenic applications.
- Oil/gas separators.
- Overpressure relief and protection of pumps, tanks, lines and hydraulic systems.
- By-pass relief or pressure regulation.

Features and Benefits

- **Available** with soft seat.
- **Threaded cap** is standard (back pressure tight).
- **Hex on valve nozzle** provides for easy installation.
- **Single control ring** offers easy adjustability of blowdown.
- **Pivoting disc design** corrects misalignment and offers exceptional performance.
- **Guide to nozzle ratio** reduces friction.
- **Full nozzle design** for optimum flow performance.
- **Threaded side outlet** for piped off discharge to eliminate fugitive emissions.

Model Descriptions

Model 912: Full nozzle design. SS warn ring and disc with brass/bronze base. Bronze/brass body and bonnet.

Model 913: Full nozzle design. Bronze/brass body and bonnet. 316 SS trim (base, disc and disc holder).

Model 918: Same as Model 912 except resilient seat/seal. Superior 'leak-free' performance.

Model 919: Same as Model 913 except resilient seat/seal. Superior 'leak-free' performance. Bronze body and bonnet. 316 SS trim (base, disc and disc holder).

Options

- Threaded cap. (Variation 01)
- Threaded cap with gag. (Variation 02)
- Plain lever. (Variation 03)
- Plain lever with gag. (Variation 04)
- Plain lever with vibration dampener. (Variation 05)
- Packed lever. (Variation 06)
- Packed lever with gag. (Variation 07)

Note

1. ASME standard valves for air or steam service must have lift lever. For steam boilers and generators.

©1998 Anderson Greenwood reserves the right to change

PRESSURE REDUCING and SUSTAINING VALVE with HYDRAULIC CHECK FEATURE

01/05

Classic Series

F115-11 (Globe)
F1115-11 (Angle)

- Throttles to reduce high upstream pressure to constant lower downstream pressure
- Throttles to maintain minimum upstream pressure
- Hydraulic Check Feature prevents flow reversal
- Reducing and Sustaining setpoints are separately adjustable

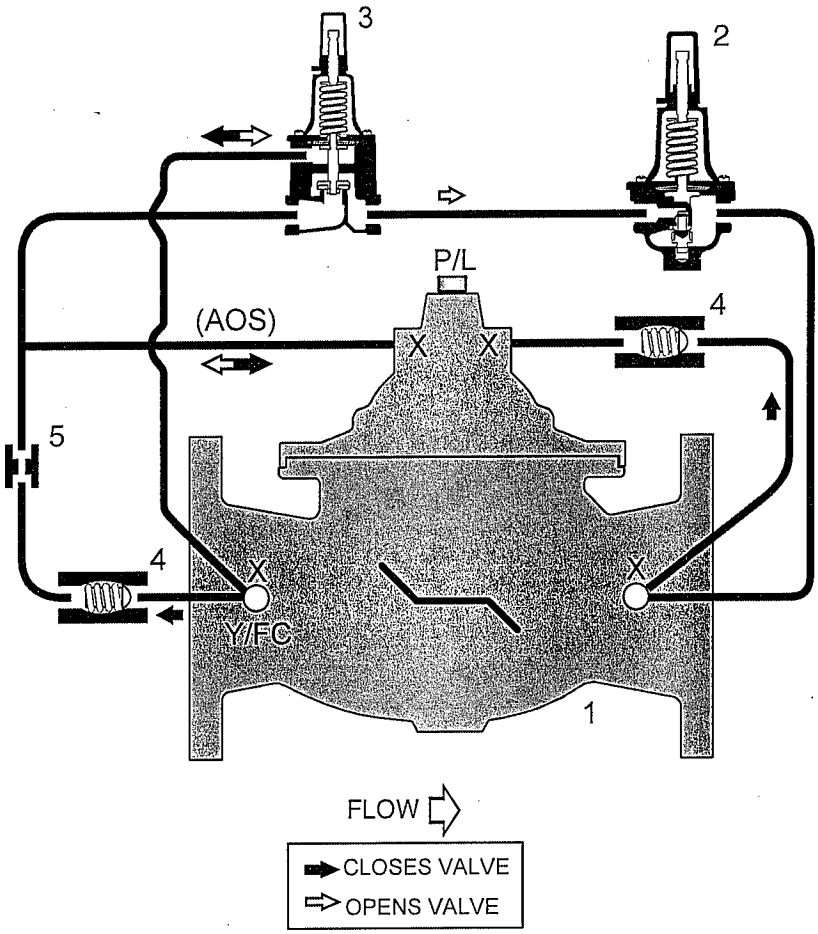

STANDARD COMPONENTS

1 - Main Valve (Single Chamber)
2 - Pressure Reducing Control
3 - Pressure Sustaining Control
4 - Check Valve
5 - Fixed Orifice

OPTIONS and ACCESSORIES

- O X - Isolation Cocks
- O FC - Flo-Clean Strainer
- O Y - Y-Strainer (Replaces Flo-Clean)
- O ACS - Adjustable Closing Speed (Replaces Fixed Orifice)
- O AOS - Adjustable Opening Speed
- O P – Position Indicator
- O L – Limit Switch

Standard Materials

Body & Cover:	Ductile Iron ASTM A536
Coating:	NSF Listed Fusion Bonded Epoxy Lined and Coated
Trim:	316 Stainless Steel (1-1/4" – 8") ASTM B62 Bronze (10" – 24") (Stainless Steel Optional)
Elastomers:	Buna-N (standard) EPDM (optional) Viton (optional)
Stem, Nut & Spring:	Stainless Steel

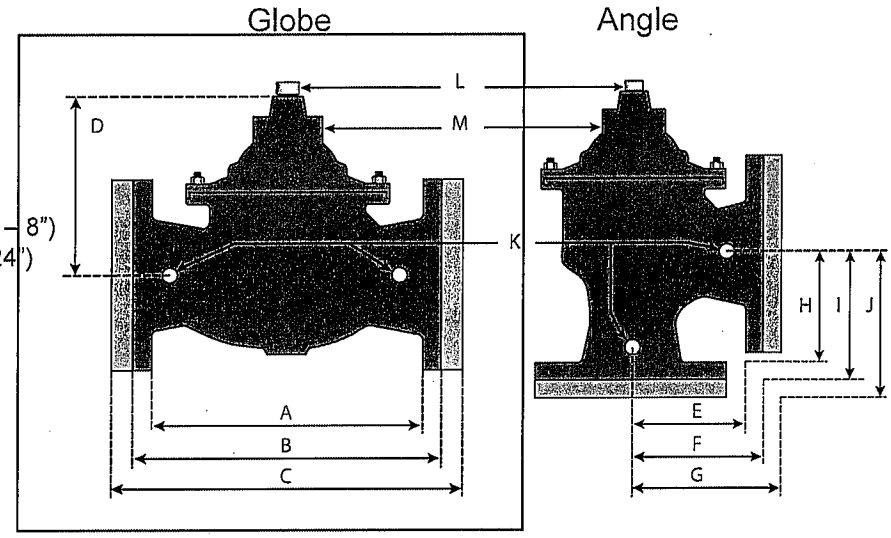

Dimensions

	A	B	C	D	E	F	G	H	I	J	K	L	M	
VALVE SIZE	GLOBE THRD.	GLOBE 150#	GLOBE 300#	COVER TO CENTER	ANGLE THRD.	ANGLE 150#	ANGLE 300#	ANGLE THRD.	ANGLE 150#	ANGLE 300#	PORT SIZE	PORT SIZE	PORT SIZE	SHIPPING WEIGHTS*
1-1/4	7-1/4			3-1/2	3-1/4			1-7/8			1/4	1/2	1/8	15
1-1/2	7-1/4	8-1/2	9	3-1/2	3-1/4	4		1-7/8	4		1/4	1/2	1/8	15
2	9-3/8	9-3/8	10	4-15/16	4	4	4-1/4	4	4	4-1/4	1/2	1/2	1/4	35
2-1/2	11	11	11-5/8	7	5-1/2	5-1/2	5-13/16	4	4	4-5/16	1/2	1/2	3/8	65
3	10-1/2	12	13-1/4	7	5-1/4	5-3/4	6-1/8	5-1/4	5-3/4	6-1/8	1/2	1/2	3/8	95
4		15	15-5/8	8-5/8		6-3/4	7-1/8		6-3/4	7-1/8	1/2	1/2	3/8	190
6		20	21	11-3/4		8-1/2	8-7/8		8-1/2	8-7/8	1/2	1/2	1/2	320
8		25-3/8	26-3/8	15-3/4		11	11-1/2		11	11-1/2	1/2	1	1/2	650
10		29-3/4	31-1/8	18-3/4		14-7/8	15-5/8		14-7/8	15-5/8	1	1	1	940
12		34	35-1/2	20-5/8		17	17-3/4		17	17-3/4	1	1	1	1500
14		39	40-1/2	22-1/4							1	1	1	1675
16		41-3/8	43-1/2	26-1/4							1	1	1	3100

Estimated in lbs.

Description

The Watts ACV Models F100 and F1100 are single chamber basic valves that incorporate a one-piece disc and diaphragm assembly. This assembly is the only moving part within the valve allowing it to open, close, or modulate as commanded by the pilot control system.

Model F100: Globe Pattern Single Chamber Basic Valve
Model F1100: Angle Pattern Single Chamber Basic Valve

Operating Pressure
Threaded = 400 psi / 150 Flanged = 250 psi / 300 Flanged = 400 psi

Operating Temperature
Buna-N: 160°F Maximum
EPDM: 300°F Maximum
Viton: 250°F Maximum

Flow Data - ACV F100 (Globe) / F1100 (Angle)

Valve Size - Inches	1-1/4	1-1/2	2	2-1/2	3	4	6	8	10	12	14	16
Maximum Continuous Flow Rate Gpm (Water)	93	125	208	300	460	800	1800	3100	4900	7000	8500	11000
Maximum Intermittent Flow Rate Gpm (Water)	115	158	260	370	570	1000	2300	3900	6000	8600	10500	14000
CV Factor GPM (Globe)	25.9	25.67	44.9	87.4	103.1	205.6	414	830	1211	1657	2100	2270
CV Factor GPM (Angle)	39	53	66	99	170	280	650	1100	1600	2500	3060	4210

Estimated

Maximum continuous flow based on velocity of 20 ft. per second.
Maximum intermittent flow based on velocity of 25 ft. per second.
The C_v Factor of a value is the flow rate in US GPM at 60° F that will cause a 1 psi drop in pressure.
The factors stated are based upon a fully open valve.
Cv factor can be used in the following equations to determine Flow (Q) and Pressure Drop (Δ P):

Q (Flow) = $C_v\sqrt{\Delta P}$ Δ P (Pressure Drop) = $(Q/C_v)^2$

Headloss

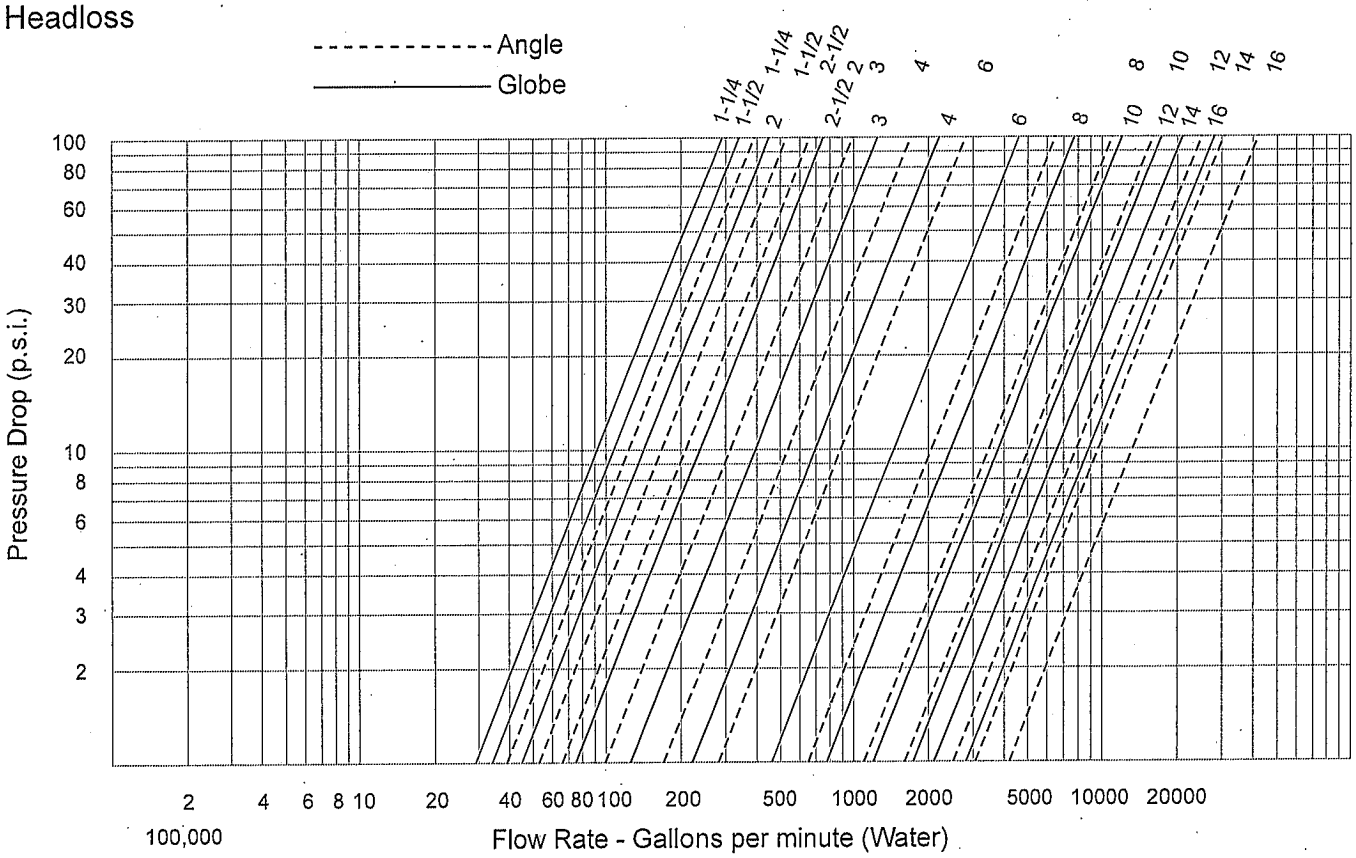

Valve Cover Chamber Capacity

Valve Size (in)	1-1/4	1-1/2	2	2-1/2	3	4	6	8	10	12	14	16
fl.oz.	4	4	4	10	10	22	70					
U.S. Gal								1-1/4	2-1/2	4	6-1/2	9-1/2

Valve Travel

Valve Size (in)	1-1/4	1-1/2	2	2-1/2	3	4	6	8	10	12	14	16
Travel (in)	3/8	3/8	1/2	5/8	3/4	1	1-1/2	2	2-1/2	3	3-1/2	4

SERIES 30

2"–20" (50mm–500mm)

Bray® Controls is proud to offer a high quality line of butterfly valves to meet the requirements of today's market. Combining years of field application experience, research and development, Bray has designed many unique features in the Series 30/31 not previously available. The results are longer service life, greater reliability, ease of parts replacement and interchangeability of components.

DISC AND STEM CONNECTION

(A) Features a high-strength through stem design. The close tolerance, double "D" connection that drives the valve disc is an exclusive feature of the Bray valve. It eliminates stem retention components being exposed to the line media, such as disc screws and taper pins, which commonly result in leak paths, corrosion, and vibration failures. Disc screws or taper pins, due to wear and corrosion, often

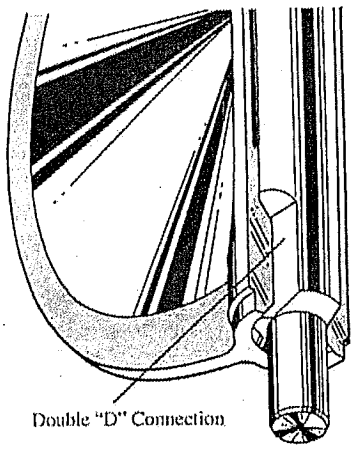

Double "D" Connection

require difficult machining for disassembly. Disassembly of the Bray stem is just a matter of pulling the stem out of the disc. Without fasteners obstructing the line flow, the Series 30/31 C_V values are higher than many other valves, turbulence is reduced, and pressure recovery is increased. The stem ends and top mounting flange are standardized for interchangeability with Bray actuators.

DISC (B) Casting is spherically machined and hand polished to provide a bubble-tight shut off, minimum torque, and longer seat life. The disc O.D. clearance is designed to work with all standard piping.

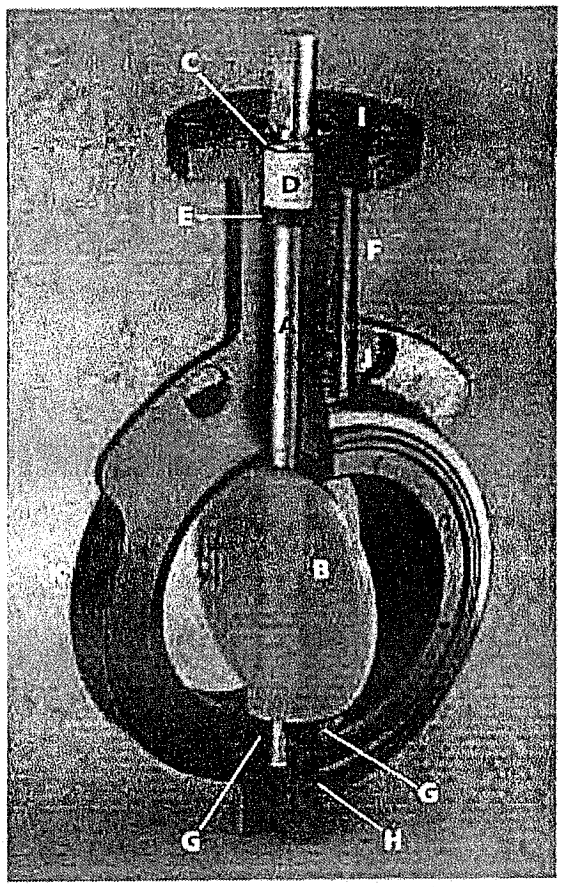

STEM RETAINING ASSEMBLY (C)

The stem is retained in the body by means of a unique Stainless Steel "Spirolox®" retaining ring, a thrust washer and two C-rings, manufactured from brass as standard, stainless steel upon request. The retaining ring may be easily removed with a standard hand tool. The stem retaining assembly prevents unintentional removal of the stem during field service.

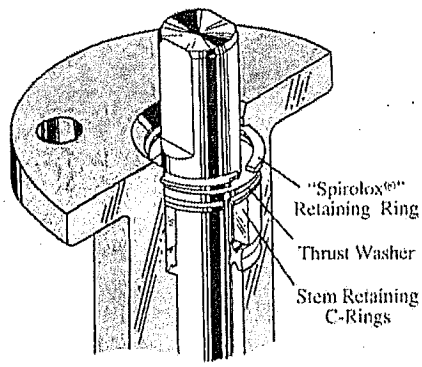

STEM BUSHING (D)

Non-corrosive, heavy duty acetal bushing absorbs actuator side thrusts.

STEM SEAL (E)

Double "U" cup seal design is self-adjusting and gives positive sealing in both directions. Prevents external substances from entering the stem bore.

NECK (F)

Extended neck length allows for 2" of piping insulation and is easily accessible for mounting actuators.

PRIMARY AND SECONDARY SEALS (G)

The Primary Seal is achieved by an interference fit of the molded seat flat with the disc hub. The Secondary Seal is created because the stem diameter is greater than the diameter of the seat stem hole. These seals prevent line media from coming in contact with the stem or body.

BRAY UNIQUE SEAT DESIGN (H)

One of the valve's key elements is Bray's unique *tongue and groove* seat design. This resilient seat features lower torque than many valves on the market today and provides complete isolation of flowing media from the body. The tongue-and-groove seat to body retention method is superior to traditional designs, making field replacement simple and fast. The seat is specifically designed to seal with slip-on or weld-neck flanges. The seat features a molded O-ring which eliminates the use of flange gaskets. An important maintenance feature is

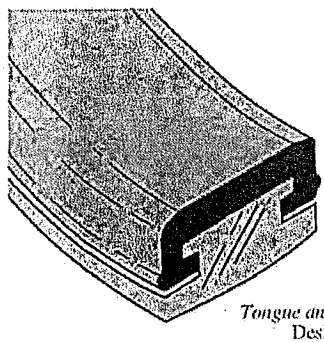

Tongue and Groove Design

*"Spirolox®" designation is a registered trademark of Kaydon Ring and Seal, Inc.

that all resilient seats for Bray butterfly valves Series 20, 21, 30, 31 and 34 are completely interchangeable.

ACTUATOR MOUNTING FLANGE AND STEM CONNECTION (I)

Universally designed to ISO 5211 for direct mounting of Bray® power actuators and manual operators.

FLANGE LOCATING HOLES (J)

Provide quick and proper alignment during installation.

BODY (K) One-piece wafer or lug style. Polyester coating for excellent corrosion resistance. Bray valve bodies meet ANSI 150 pressure ratings for hydrostatic shell test requirements.

DESIGN FEATURES

Bray's Series 30 valve is a wafer version with flange locating holes, and the Series 31 is the companion lug version for dead-end service and other flange requirements. All Bray valves are tested to 110% of full pressure rating before shipment.

A major design advantage of Bray valve product lines is international compatibility. The same valve is compatible with most world flange standards – ANSI Class 125/150, BS 10 Tables D and E, BS 4504 NP 10/16, DIN ND 10/16, AS 2129 and JIS 10. In addition the valves are designed to comply with ISO 5752 face-to-face and ISO 5211 actuator mounting flanges. Therefore, one valve design can be used in many different world markets.

Due to a modular concept of design, all Bray® handles, manual gear operators and pneumatic and electric actuators mount directly to Bray valves. No brackets or adapters are required.

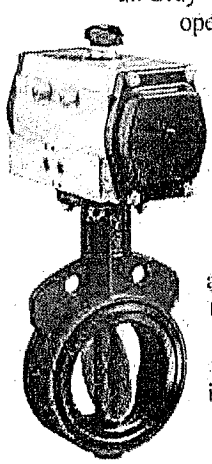

Bray interchangeability and compatibility offers you the best in uniformity of product line and low-cost performance in the industry today.

POLYESTER COATING CORROSION PROTECTION

Bray's standard product offers valve bodies with a polyester coating, providing excellent corrosion and wear resistance to the valve's surface. The Bray polyester coating is a hard, gloss red finish.

Chemical Resistance – resists a broad range of chemicals including: dilute aqueous acids and alkalies, petroleum solvents, alcohols, greases and oils. Offers outstanding resistance to humidity and water.

Weatherability – outdoor tested resistant to ultra-violet radiation.

Abrasion Resistance – excellent resistance to abrasion.

Impact Resistance – withstands impact without chipping or cracking.

NYLON 11 COATING

Optionally available for valve bodies where outstanding protection and performance is needed. A thermoplastic produced from a vegetable base, this coating is inert to fungus growth and molds. Nylon 11 is *USDA Approved*, as well as certified to ANSI/NSF 61 for water service.

Corrosion Resistance – superior resistance to a broad range of chemical environments. Salt spray tested in excess of 2,000 hours and seawater immersion tested for over 10 years without corrosion to metal substrates.

Nylon 11 features a very low coefficient of friction and excellent resistance to impact and ultra-violet radiation.

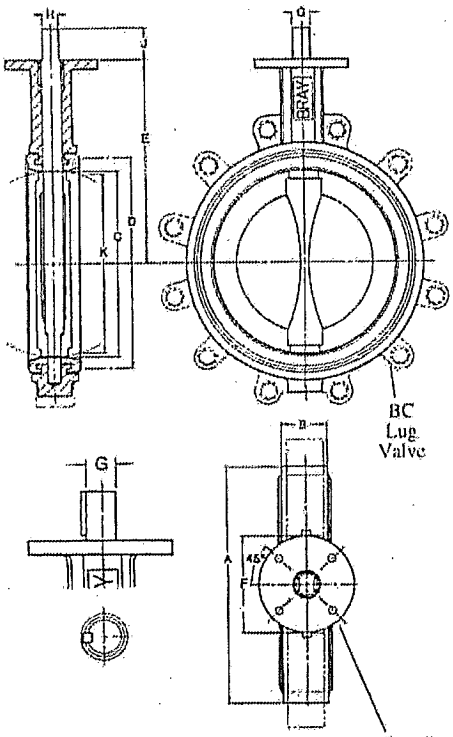

DIMENSIONS SERIES 30 Wafer

Valve Size ins	Valve Size mm	A	B	C	D	E	F	Mounting Flange Drg. BC	No. Holes	Hole Dia.	G	H	J	K
2	50	3.69	1.62	2.00	2.84	5.50	3.54	2.76	4	.39	.55	.39	1.25	1.32
2 1/2	65	4.19	1.75	2.50	3.34	6.00	3.54	2.76	4	.39	.55	.39	1.25	1.91
3	80	4.88	1.75	3.00	4.03	6.25	3.54	2.76	4	.39	.55	.39	1.25	2.55
4	100	6.06	2.00	4.00	5.16	7.00	3.54	2.76	4	.39	.63	.43	1.25	3.57
5	125	7.06	2.12	5.00	6.16	7.50	3.54	2.76	4	.39	.75	.51	1.25	4.63
6	150	8.12	2.12	5.75	7.02	8.00	3.54	2.76	4	.39	.75	.51	1.25	5.45
8	200	10.50	2.50	7.75	9.47	9.50	5.91	4.92	4	.57	.87	.63	1.25	7.45
10	250	12.75	2.50	9.75	11.47	10.75	5.91	4.92	4	.57	1.18	.87	2.00	9.53
12	300	14.88	3.00	11.75	13.47	12.25	5.91	4.92	4	.57	1.18	.87	2.00	11.47

Valve Size ins	Valve Size mm	A	B	C	D	E	F	Mounting Flange Drg. BC	No. Holes	Hole Dia.	G	J	KEY SIZE	K
14	350	17.05	3.00	13.25	15.28	13.62	5.91	4.92	4	.57	1.38	2.00	.39x.39	13.04
16	400	19.21	4.00	15.25	17.41	14.75	5.91	4.92	4	.57	1.38	2.00	.39x.39	14.85
18	450	21.12	4.25	17.25	19.47	16.00	8.27	6.50	4	.81	1.97	2.50	.39x.47	16.85
20	500	23.25	5.00	19.25	21.59	17.25	8.27	6.50	4	.81	1.97	2.50	.39x.47	18.73

SERIES 31 Lug

Lug Bolting Data BC	No. Holes	Threads UNC-2B
4.75	4	5/8-11
5.50	4	5/8-11
6.00	4	5/8-11
7.50	8	5/8-11
8.50	8	3/4-10
9.50	8	3/4-10
11.75	8	3/4-10
14.25	12	7/8-9
17.00	12	7/8-9

Lug Bolting Data BC	No. Holes	Threads UNC-2B
18.75	12	1-8
21.25	16	1-8
22.75	16	1 1/8-7
25.00	20	1 1/8-7

SELECTION DATA

FLANGE REQUIREMENTS

Bray valves are designed for installation between ANSI Class 125/150 lb. weld-neck or slip-on flanges, BS 10 Tables D & E, BS 4504 NP 10/16, DIN ND 10/16, AS 2129 and JIS 10, either flat faced or raised faced. While weld-neck flanges are recommended, Bray has specifically designed its valve seat to work with slip-on flanges, thus eliminating common failures of other butterfly valve designs. When using raised face flanges be sure to properly align valve and flange. Type C stub-end flanges are not recommended.

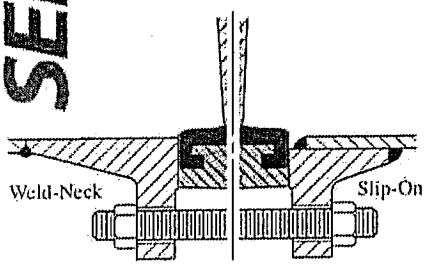

PRESSURE RATINGS*

For bi-directional bubble-tight shut off, disc in closed position:

Inches	mm	psig	bar
2-12	50-300	175	12
14-20	350-500	150	10

For Dead-end Service Applications: With *downstream flanges installed* or with *vulcanized seats*, the dead-end pressure ratings are equal to valve bi-directional ratings as stated above. With no downstream flanges or with seats that are not vulcanized, the dead-end pressure rating for 2"-12" valves is 75 psi (5 bar) for 14"-20" valves, 50 psi (3.5 bar).

*Pressure Ratings are based on standard disc diameters. For low pressure application, Bray offers a standard reduced disc diameter to decrease seating torques and to extend seat life, thus increasing the valve's performance and reducing actuator costs for the customer.

VELOCITY LIMITS

For On/Off Services:
Fluids – 30 ft/sec (9m/s)
Gases – 175 ft/sec (54m/s)

C_V VALUES–VALVE SIZING COEFFICIENT

Valve Size		Disc Position (degrees)								
ins	mm	90°	80°	70°	60°	50°	40°	30°	20°	10°
2	50	144	114	84	61	43	27	16	7	1
2 1/2	65	282	223	163	107	67	43	24	11	1.5
3	80	461	364	267	154	96	61	35	15	2
4	100	841	701	496	274	171	109	62	27	3
5	125	1376	1146	775	428	268	170	98	43	5
6	150	1850	1542	1025	567	354	225	129	56	6
8	200	3316	2842	1862	1081	680	421	241	102	12
10	250	5430	4525	2948	1710	1076	667	382	162	19
12	300	8077	6731	4393	2563	1594	1005	555	235	27
14	350	10538	8874	5939	3384	2149	1320	756	299	34
16	400	13966	11761	7867	4483	2847	1749	1001	397	45
18	450	17214	14496	10065	5736	3643	2237	1281	507	58
20	500	22339	18812	12535	7144	4536	2786	1595	632	72

C_V is defined as the volume of water in U.S.G.P.M. that will flow through a given restriction or valve opening with a pressure drop of one (1) p.s.i. at room temperature. Recommended control angles are between 25°–70° open. Preferred angle for control valve sizing is 60°–65° open.

EXPECTED SEATING/UNSEATING TORQUES (Lb.-Ins.)

Valve Size		Full-Rated Pressure Valves				Reduced Disc Diameter
		ΔP (PSI)				ΔP (PSI)
ins	mm	50	100	150	175	50
2	50	125	130	135	140	125
2 1/2	65	195	205	215	220	195
3	80	260	275	290	297	260
4	100	400	425	450	462	267
5	125	615	670	725	755	410
6	150	783	871	953	1003	537
8	200	1475	1650	1825	1915	983
10	250	2240	2520	2800	2940	1493
12	300	3420	3870	4320	4545	2280
14	350	4950	5700	6450	—	3300
16	400	6400	7700	9000	—	4267
18	450	7850	9850	11850	—	5267
20	500	10300	12900	15500	—	6867

Valve Torque Rating – Bray has classified valve torque ratings according to 3 types: non-corrosive lubricating service, general service, and severe service. Torques listed above are for general services Consult Bray for torque information corresponding to specific applications.

TO USE TORQUE CHART, NOTE THE FOLLOWING:

1) For Bray valves, Series 20, 21, 30, 31 and 34.
2) Review Technical Bulletin No. 1001, Expected Seating/Unseating Torques, for explanation of the 3 service classes and their related seating/unseating torque values for given pressure differentials of Full-Rated and Reduced Disc Diameter valves.
3) Dynamic Torque values are not considered. See Technical Bulletin No. 1002 for evaluation of Dynamic Torque values vs. Seating/Unseating Torque values.
4) Do not apply a safety factor to above torque values when determining actuator output torque requirement.
5) For 3 way assemblies where one valve is opening and other is closing, multiply torque by 1.5 factor.

64 SERIES
Full-Port Brass Ball Valve

Job Name:	**Contractor:**
Job Location:	**P.O. Number:**
Engineer:	**Representative:**
Tag:	**Wholesale Distributor:**

DESCRIPTION
The Apollo® International 64 Series is an economy full port forged brass ball valve ideal for a wide range of plumbing and heating applications.

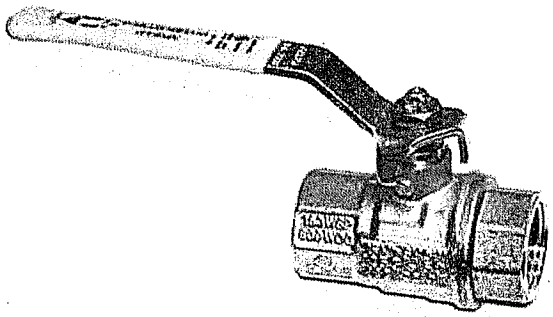

FEATURES
- 100% Factory Tested to MSS SP-110
- Meets ANSI/NSF 61-2004
- Blow-out Proof Stem Design
- Adjustable Stem Packing
- Secondary O-ring Stem Seal
- Directive 2002/95/CE (RoHS) Compliant

PERFORMANCE RATING
- Valve Design Rating: 600 CWP, 150 SWP
- Max Temperature: 366°F

MATERIALS

Part Name	Material
Body	Forged Brass (Cu >57%)
Retainer	Forged Brass (Cu >57%)
Ball	Brass, Cr plated
Stem	Brass, Cr plated
Seat Ring	PTFE
Stem Seal	NBR 75 Shore A
Stem Packing	PTFE
Packing Nut	Plated Steel
Packing Gland	Brass
Handle	Zinc Plated Steel
Handle Cover	PVC

APPROVALS
CSA: ¼"-4" NPT per ANSI Z21.15/CGA 9.1 (1/2 psi)
¼"-4" NPT per ASME B16.44 (5 psi)
½"-2" NPT per ASME B16.33 (125 psi)
2 ½'-4" NPT per ASME B16.38 (125 psi)

UL: ¼" 1" UL 125, "Guide YSDT"
¼"-1" UL 842, "Guides YRPY,JRBX,MHKZ
¼"-2" UL Subject 258, "Guide VQGU"

FM: ¼"-2" per FM1140

NSF: ANSI/NSF 61-2004, "Drinking Water System Components - Health Effects."

OPTIONAL KITS

Valve Size	Locking Handle	2" Stem Extension	Balancing Stop
1/4", 3/8", 1/2"	78165902	78150101	78150601
¾", 1"	78166002	78150201	78150701
1-1/4", 1-1/2"	78166102	78150301	78150801
2"	78166202	78150401	78150901
2-1/2", 3"	N/A	78150501	N/A
4"	N/A		

* Note: Locking handle cannot be used with 2" stem extension

DIMENSIONS

Part No.	Size	A	B	C	D	Cv	Wt.(lbs.)
NPT							
64-101	1/4"	0.39	2.02	1.75	3.85	6	0.33
64-102	3/8"	0.39	2.02	1.75	3.85	7	0.30
64-103	1/2"	0.59	2.44	1.88	3.85	19	0.51
64-104	3/4"	0.78	2.71	2.28	4.80	34	0.80
64-105	1"	0.98	3.07	2.44	4.80	50	1.25
64-106	1 1/4"	1.25	3.42	3.07	6.02	104	2.26
64-107	1 1/2"	1.57	3.89	3.34	6.02	268	3.39
64-108	2"	1.96	4.33	3.79	6.37	309	4.25
64-109	2 1/2"	2.56	5.59	5.02	8.07	629	8.60
64-100	3"	3.15	6.45	5.45	8.07	1018	13.35
64-10A	4"	3.94	7.60	6.34	10.23	1622	22.05
SOLDER							
64-203	1/2"	0.59	2.53	1.88	3.85	19	0.51
64-204	3/4"	0.78	2.99	2.28	4.80	34	0.78
64-205	1"	0.98	3.58	2.44	4.80	50	1.14
64-206	1 1/4"	1.25	4.09	3.07	6.02	104	2.07
64-207	1 1/2"	1.57	4.56	3.34	6.02	268	3.42
64-208	2"	1.96	5.43	3.79	6.37	309	4.49
64-209	2 1/2"	2.56	6.93	5.02	8.07	629	10.00
64-200	3"	3.15	8.09	5.45	8.07	1018	15.00
64-20A	4"	4.13	10.25	6.34	10.23	1622	25.00

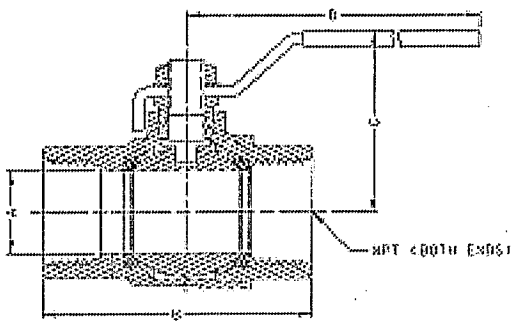

Conbraco Industries, Inc. 701 Matthews Mint Hill Rd. Matthews NC 28106 USA; www.apollovalves.com

This specification is provided for reference only. Conbraco reserves the right to change any portion of this specification without notice and without incurring obligation to make such changes to Conbraco products previously or subsequently sold.

Brass Check Valves

Brass Body • Swing Type Check

200 PSI/14 Bar Non-Shock Cold Working Pressure
Truesdail LAB listed to NSF/ANSI 61-8

MATERIAL LIST

PART	SPECIFICATION
1. Bonnet	Bronze ASTM B 584 Alloy C85700
2. Plug	Bronze ASTM B 16 Alloy C36000
3. Pin	Brass ASTM B 16 Alloy C37700
4. Disc	Brass ASTM B 124 Alloy C37700
5. Body	Brass ASTM B 584 Alloy C85700 or Alloy C83600

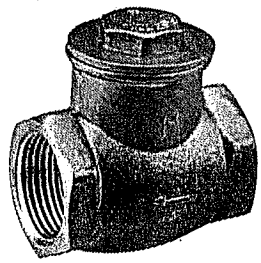

TI-3
Threaded

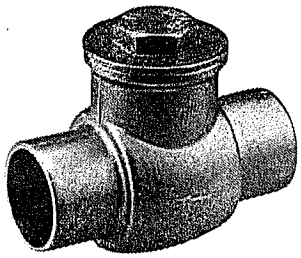

SI-3
Solder

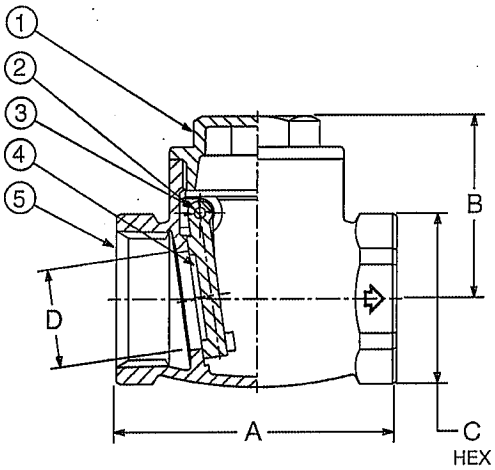

TI-3
NPT to NPT

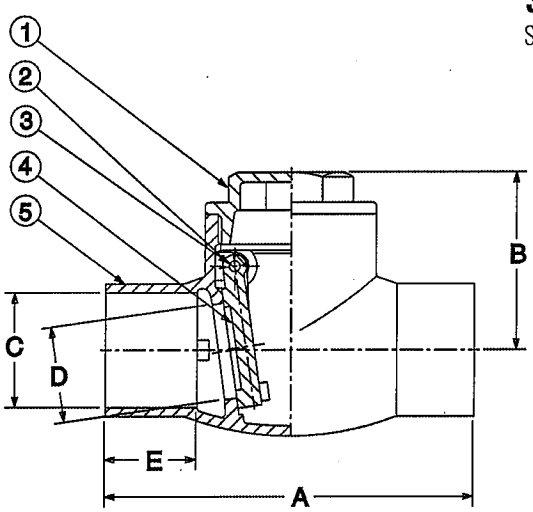

SI-3
Cup x Cup

DIMENSIONS—WEIGHTS

Size		Dimensions TI-3 A		SI-3 A		TI-3 B		SI-3 B		TI-3 C		SI-3 C		TI-3 D		SI-3 D		SI-3 E		WEIGHT TI-3		WEIGHT SI-3	
In.	mm.	In.	mm.	In.	mm.	In.	mm.	In.	mm.	In.	mm.	In.	mm.	In.	mm.	In.	mm.	In.	mm.	Lbs.	Kg.	Lbs.	Kg.
½	15	2.05	52	2.13	54	1.50	38	1.50	38	1.00	25	0.63	16	0.52	13	0.52	13	0.50	13	0.46	0.21	0.46	0.21
¾	20	2.32	59	2.99	76	1.57	40	1.57	40	1.22	31	0.88	22	0.70	18	0.70	18	0.75	19	0.66	0.30	0.66	0.30
1	25	2.72	69	3.66	93	1.77	45	1.77	45	1.50	38	1.13	29	0.94	24	0.94	24	0.91	23	0.92	0.42	0.92	0.42
1¼	32	3.11	79	4.09	104	2.01	51	2.01	51	1.85	47	1.38	35	1.24	32	1.24	32	0.97	25	1.60	0.73	1.60	0.73
1½	40	3.50	89	4.57	116	2.17	55	2.17	55	2.11	54	1.63	41	1.42	36	1.42	36	1.09	28	1.79	0.81	1.79	0.81
2	50	4.29	109	5.51	140	2.64	67	2.64	67	2.60	66	2.13	54	1.81	46	1.81	46	1.34	34	2.87	1.30	2.87	1.30
2½	65	5.31	135	—	—	3.31	84	—	—	3.23	82	—	—	2.26	57	—	—	—	—	5.29	2.40	—	—
3	80	6.30	160	—	—	3.78	96	—	—	3.78	96	—	—	2.70	69	—	—	—	—	8.82	4.01	—	—
4	100	7.38	190	—	—	4.45	113	—	—	4.80	122	—	—	3.78	96	—	—	—	—	13.23	6.01	—	—

700 Series

Field Liquid Fillable ○ Stainless Steel Case

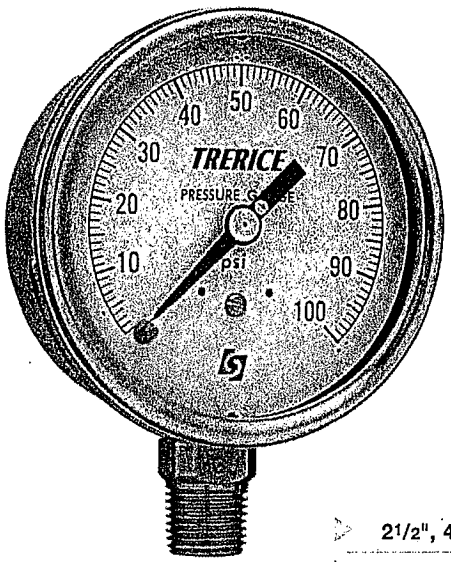

700B shown

- **2½", 4", 6" Dial Sizes**
- **±1.0% Accuracy**
- **Stainless Steel Case**
- **Field Liquid Fillable**

The Trerice **700 Series** Industrial Gauge is designed for the varying needs of the world's industrial applications. This gauge has a stainless steel case and ring. Its sturdy interior design and field liquid-fill capability (no kit required) provide the durability and accuracy required for industrial process environments. Available wetted parts are bronze tube with brass socket, stainless steel tube and socket, or Monel tube and socket.

- Optional features and case style variations available: Please consult the Options & Accessories Section for details.
- For correct use and application of all pressure gauges, please refer to: Pressure Gauge Standard ASME B40.100.

700LFB 40 02 L D 120

HOW TO ORDER

Sample Order Number: **700LFSS 25 02 B A 140**

Model	Dial Size	Connection Size	Connection Location	Units of Measure	Range Code
700B 700LFB 700SS 700LFSS 700M 700LFM	25 2½" * 40 4" 60 6"	02 ¼ NPT 04 ½ NPT	L Lower B Back	A psi D psi/kPa	See Standard Ranges

* Not available with Monel wetted parts or with ½ NPT connection.

Specifications

Models		Wetted Parts
700B 700LFB	(dry) (liquid-filled)	Bronze tube, brass socket
700SS 700LFSS	(dry) (liquid-filled)	316 stainless steel tube and socket
700M 700LFM	(dry) (liquid-filled)	Monel tube and socket (meets NACE MR 01.75)

Dial Sizes	2½", 4", 6"
Fill	Glycerine. Other fills available. See Options & Accessories.
Movement	Stainless steel
Connection	2½" Dial Size: Lower male or center back male, ¼ NPT 4", 6" Dial Size: Lower male or lower back male, ¼ or ½ NPT
Case	304 stainless steel, satin finished, stem-mounted flangeless
Ring	Bayonet type, 304 stainless steel
Window	Laminated safety glass
Pointer	2½" Dial Size: Adjustable, black finished 4", 6", Dial Size: Micro adjustable, knife edge, black finished
Dial Face	Aluminum, white background with black graduations and markings
Accuracy	±1.0% Full Scale, ASME B40.100 Grade 1A
Maximum Temperature	700SS, 700M: **250°F (121°C)** 700B, 700LFB, 700LFSS, 700LFM: **150°F (65°C)**
Approximate Shipping Weight	700B, 700SS 2½" Dial Size: 0.4 lbs [0.18 kg] 700LFB, 700LFSS, 700LFM 2½" Dial Size: 0.5 lbs [0.23 kg] 700B, 700SS, 700M 4" Dial Size: 1.3 lbs [0.59 kg] 700LFB, 700LFSS, 700LFM 4" Dial Size: 2.1 lbs [0.95 kg] 700B, 700SS, 700M 6" Dial Size: 2.0 lbs [0.91 kg] 700LFB, 700LFSS, 700LFM 6" Dial Size: 3.8 lbs [1.72 kg]

Distributed by: M&M Control Service, INC. 800-876-0036

700 Series

Field Liquid Fillable Stainless Steel Case

All dimensions are nominal. Dimensions in [ ] are in millimeters.

Dial Size	Material	C	E	F	G	H	J
4"	Brass	3.98 [101]	3.39 [86]	0.94 [24]	1.04 [27]	1.44 [37]	2.24 [57]
	SS	3.98 [101]	3.39 [86]	0.94 [24]	1.36 [35]	1.38 [35]	2.24 [57]
6"	Brass	6.34 [161]	4.57 [116]	0.69 [18]	1.04 [27]	1.44 [37]	1.97 [50]
	SS	6.34 [161]	4.57 [116]	0.69 [18]	1.36 [35]	1.38 [35]	1.97 [50]

2½"

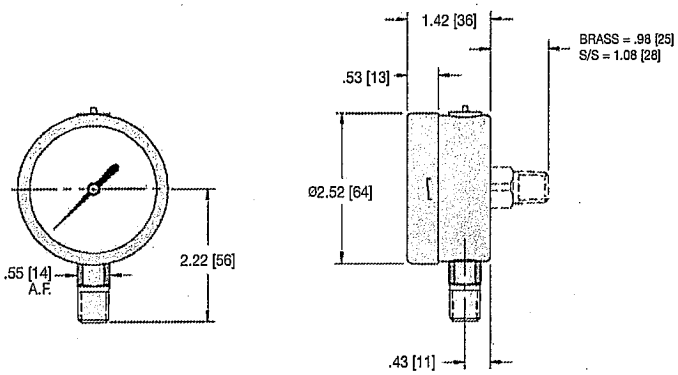

4" & 6"

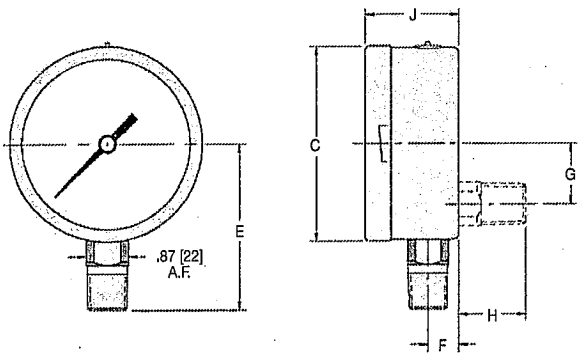

Standard Ranges

psi Ranges (A)			
All Sizes			
Range Code	Specific Range (psi)	Figure Intervals	Minor Divisions
010	30" Hg to 0	5	0.5
020	30" Hg to 15 psi	10/5	0.5/0.5
030	30" Hg to 30 psi	10/5	1/1
040	30" Hg to 60 psi	10/10	2/1
050	30" Hg to 100 psi	30/20	2/2
060	30" Hg to 150 psi	30/20	5/2
070	30" Hg to 300 psi	30/50	5/5
080	0 to 15 psi	3	0.2
090	0 to 30 psi	5	0.5
100	0 to 60 psi	10	1
110	0 to 100 psi	10	2
120	0 to 160 psi	20	2
130	0 to 200 psi	20	2
140	0 to 300 psi	50	5
150	0 to 400 psi	50	5
160	0 to 600 psi	100	10
Ranges over 600 psi are not available in 700B or 700LFB in 4" or 6" Dial Sizes.			
180	0 to 1000 psi	100	20
190	0 to 1500 psi	300	20
200	0 to 2000 psi	200	20
210	0 to 3000 psi	500	50
220	0 to 5000 psi	1000	100
230	0 to 10,000 psi	2000	200
Ranges over 10,000 psi are ONLY available in 700SS or 700LFSS in 4" or 6" Dial Sizes.			
240	0 to 10,000 psi	2000	200
250	0 to 20,000 psi	2000	200

For dual scale ranges, specify the appropriate **Units of Measure: D** *(psi/kPa) followed by the corresponding A (psi)* **Range Code.** *Other pressure ranges are also available including: Altitude, Ammonia, Refrigerant and Receiver. Consult Special Application Ranges section or factory for availability.*

Distributed by: M&M Control Service, INC. 800-876-0036

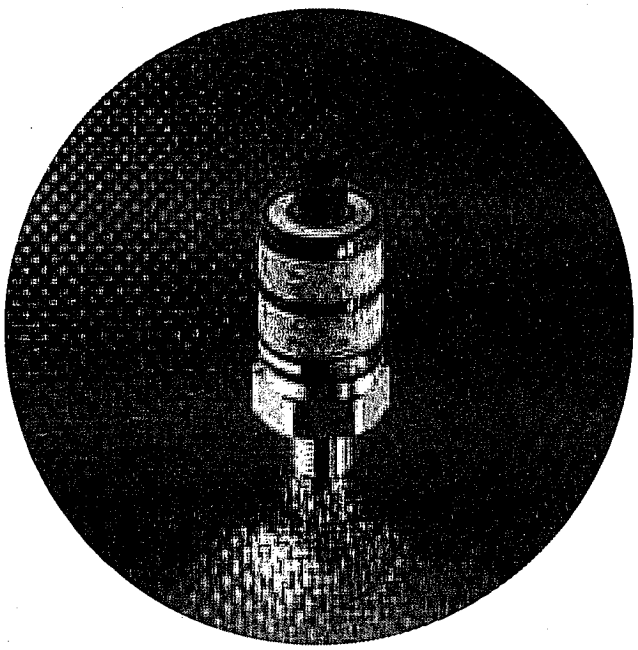

- Compact pressure switch features simple setup using mechanical adjustment dials
- Extremely durable housing with 316 stainless steel process connection
- No moving parts insure long-term stability without setpoint drift
- LEDs indicate switching and operating status
- Use with ifm's *ecolink* M12 Micro DC cordsets

Optional Accessories

Type	Description	Part No.
	Protective cover	E 30094

Cordsets

Type	Description	Part No.
	M12 DC Cordset (4-pin) 2 m, PUR	EVC 001
	M12 DC Cordset (4-pin) 5 m, PUR	EVC 002
	M12 DC Cordset (4-pin) 10 m, PUR	EVC 003
	M12 DC Cordset (4-pin) 2 m, PUR	EVC 004
	M12 DC Cordset (4-pin) 5 m, PUR	EVC 005
	M12 DC Cordset (4-pin) 10 m, PUR	EVC 006
	M12 DC Cordset (4-pin) 2 m, PUR, LED	EVC 007
	M12 DC Cordset (4-pin) 5 m, PUR, LED	EVC 008
	M12 DC Cordset (4-pin) 10 m, PUR, LED	EVC 009

For additional accessories & technical data, see pages 262 - 267

For additional Cordsets, see pages 240 - 251.

PK Series Sensors
Complementary Output, DC

Port size	Output 1 / Output 2	Setpoint Range [psi]	Resetpoint Range [psi]	Overload pressure	Burst pressure limit	Part No.
Complementary normally open or normally closed output · M12 connector · Wiring diagram no. 1						
1/4" NPT	NO / NC	7.5...145 psi (0.5...10 bar)	5.0...142 psi (0.3...9.8 bar)	362 psi (25 bar)	4350 psi (300 bar)	**PK 6224**
1/4" NPT	NO / NC	75...1450 psi (5...100 bar)	50...1420 psi (3...98 bar)	2900 psi (200 bar)	14,500 psi (1000 bar)	**PK 6222**
1/4" NPT	NO / NC	290...5800 psi (20...400 bar)	175...5685 psi (12...392 bar)	8700 psi (600 bar)	23,200 psi (1600 bar)	**PK 6220**
G 1/4 BSPP	NO / NC	7.5...145 psi (0.5...10 bar)	5.0...142 psi (0.3...9.8 bar)	362 psi (25 bar)	4350 psi (300 bar)	**PK 6524**
G 1/4 BSPP	NO / NC	18...363 psi (1.25...25 bar)	11...363 psi (0.75...24.5 bar)	870 psi (60 bar)	7253 psi (500 bar)	**PK 6523**
G 1/4 BSPP	NO / NC	75...1450 psi (5...100 bar)	50...1420 psi (3...98 bar)	2900 psi (200 bar)	14,500 psi (1000 bar)	**PK 6522**
G 1/4 BSPP	NO / NC	181...3625 psi (12.5...250 bar)	109...3553 psi (7.5...245 bar)	5800 psi (400 bar)	14,500 psi (1000 bar)	**PK 6521**
G 1/4 BSPP	NO / NC	290...5800 psi (20...400 bar)	175...5685 psi (12...392 bar)	8700 psi (600 bar)	23,200 psi (1600 bar)	**PK 6520**

Check the chemical compatibility of the sensor's wetted parts with the medium to be measured.

Additional Technical Data

Supply voltage: 9.6...32 VDC
Current consumption: <25 mA
Voltage drop: <2 V
Maximum load current: 2 x 250 mA
Medium temperature range: –13...+176 °F (–25...+80 °C)
Accuracy: < ±2.5 of full range
Repeatability: < ± 0.5% of full range
Wetted parts: PK622x: 316 stainless steel, PK652x: 316 stainless steel, Viton
Housing materials: PBTP (Pocan), PC (Makrolon), FPM (Viton), 316 stainless steel
Protection: IP67

Wiring diagrams

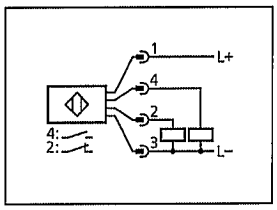

Wiring diagram no. 1

PIM sensor with pump diagnostic — 34 - 35
PI transmitter with display — analog output — 36 - 37
PA transmitter — 38 - 39
For sanitary applications
PI7 sensor with display — analog and/or switching output — 40 - 41
PIM sensor with pump diagnostic — 42 - 43
PI transmitter with display — analog output — 44 - 45
PM transmitter — 46 - 47
PMP Profibus PA transmitter — 48 - 49

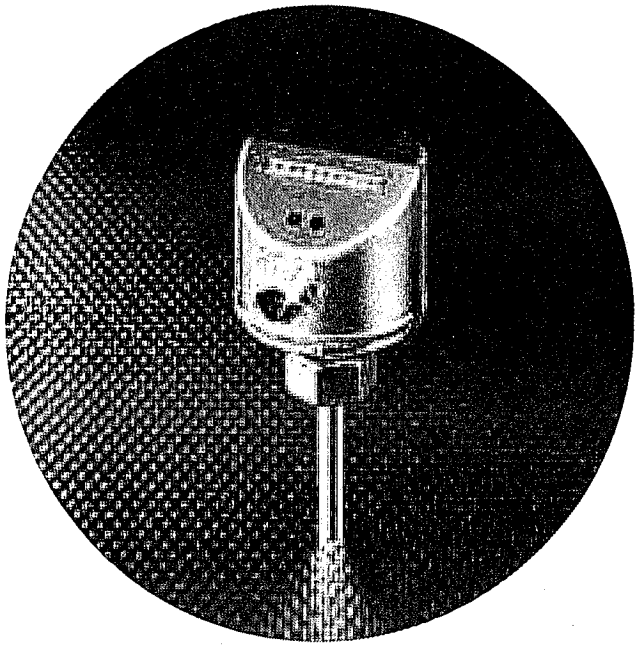

- Flow sensors monitor fluids and gases with no moving parts
- Ready to use at factory default values or customize high/low teach values
- LED display for visual indication
- Solid state output via 4-pin Micro DC connector
- Reduced inventory via modular mounting adapter system

Required Accessories (choose one adapter)

Type	Description	Part No.
	1/4" NPT adapter	E 40106
	1/2" NPT adapter	E 40107
	3/4" NPT adapter	U 40085
	1" NPT adapter	U 40080
	M12x1 adapter	E 40101
	G1/4 BSPP adapter	E 40099
	G1/2 BSPP adapter	E 40096
	Weldable adapter, carbon steel	E 40113
	Weldable adapter, 316 stainless steel	E 40124

For additional accessories & technical data, see pages 268 - 275.

Optional Accessories and Cordsets

Type	Description	Part No.
	1/8" NPT low flow adapter (requires E40101 adapter)	U 40046
	1/4" NPT low flow adapter (requires E40099 adapter)	U 40062
	1/2" tee, brass (requires E40107 adapter)	U 40029
	1/2" tee, stainless steel (requires E40107 adapter)	U 40030
	M12 DC Cordset (4-pin) 2 m, PUR	EVC 001
	M12 DC Cordset (4-pin) 5 m, PUR	EVC 002
	M12 DC Cordset (4-pin) 10 m, PUR	EVC 003
	M12 DC Cordset (4-pin) 2 m, PUR	EVC 004
	M12 DC Cordset (4-pin) 5 m, PUR	EVC 005
	M12 DC Cordset (4-pin) 10 m, PUR	EVC 006

For additional Cordsets, see pages 240 - 251.

	For industrial applications	SI sensor	SI transmitter	SM Magmeter	SU ultrasonic flow meter	efector metris for specialty gases	efector metris for compressed air
Flow sensors			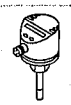		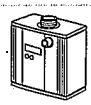	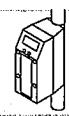	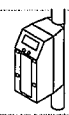
Page		58 - 61	62 - 63	64 - 65	66 - 67	68 - 69	70 - 71

SI Series Flow Sensor
Switching Output, DC

Output	Process Connection	Operating Range for Liquids	Switchpoint Setting Range for Water	Response Time	Pressure Rating	Part No.
M12 connector - Wiring diagram No. 1						
PNP, N.O./N.C.	See required accessories	5...590 ft/min 3...300 cm/sec	5...196 ft/min 3...100 cm/sec	1...10 sec	435 psi 30 bar	**SI 5000**
PNP, N.O./N.C.	See required accessories	5...590 ft/min 3...300 cm/sec	5...196 ft/min 3...100 cm/sec	1...10 sec	4350 psi 300 bar	**SI 5010**
M12 connector - Wiring diagram No. 2						
NPN, N.O./N.C.	See required accessories	5...590 ft/min 3...300 cm/sec	5...196 ft/min 3...100 cm/sec	1...10 sec	435 psi 30 bar	**SI 5001**
NPN, N.O./N.C.	See required accessories	5...590 ft/min 3...300 cm/sec	5...196 ft/min 3...100 cm/sec	1...10 sec	4350 psi 300 bar	**SI 5011**

Note: Factory default settings are 5...100 cm/sec for water.
Dual output versions also available – contact factory or www.ifmefector.com

Additional Technical Data

Supply voltage: 19...36 VDC
Maximum load current: 250 mA
Voltage drop: < 2.5 VDC
Current consumption: < 60 mA
Medium temperature range: -13...+176 °F (-25...+80 °C)
Wetted parts: 316 stainless steel, viton
Operating range for gases: 393...5905 ft/min (200...3000 cm/sec)
Switchpoint setting range for gases: 393...1574 ft/min (200...800 cm/sec)
Maximum temperature gradient of medium: 300 °C / min
Repeatability: 1...5 cm/sec (for water)
Hysteresis: 2...5 cm/sec (for water)
Protection: IP67

Wiring diagrams

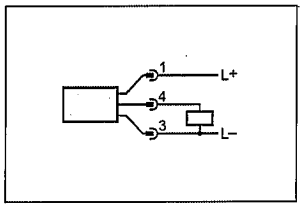

Wiring diagram no. 1

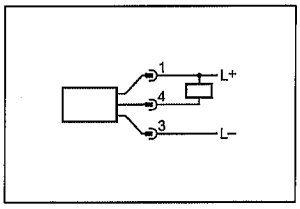

Wiring diagram no. 2

SL airflow sensor
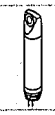
72 - 73

SF remote mount sensors
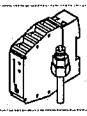
74 - 79

For sanitary applications
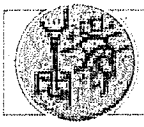

SI sensor
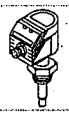
80 - 81

For hazardous applications

SF remote mount sensors
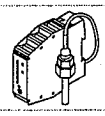
82 - 85

Models 912, 913, 918, 919 ASME Section VIII, Steam/Air/Gas/ Liquid, 'UV' National Board Certified. Also available for Vacuum Service

Pressure and Temperature Limits

Models 912, 913, 918, 919: – Steam
3 to 250 psig [-20 to 17 barg][1]
-60° to 406°F [-51° to 208°C]

Models 912, 918: – Air/Gas/Liquid
3 to 300 psig [-20 to 21 barg]
-60° to 406°F [-51° to 208°C]

Models 913, 919: – Air/Gas/Liquid
3 to 900 psig [-20 to 62 barg]
-60° to 406°F [-51° to 208°C]

Vacuum – 6- through 29-inch HG
[200 through 1000 mbarg] – 300°F [149°C]

Maximum back pressure 50 psig [3 barg]
- threaded cap and packed lever

Applications

- Air/gas compressors - intercoolers - aftercoolers.
- Liquid filled pressure vessels/systems - ASME Section VIII (UV).
- Pressure vessels - containing gas, air, liquid or steam. Including tanks and receivers.
- Vacuum systems including pumps, tanks and equipment.
- Optional materials for low temperature - cryogenic applications.
- Oil/gas separators.
- Overpressure relief and protection of pumps, tanks, lines and hydraulic systems.
- By-pass relief or pressure regulation.

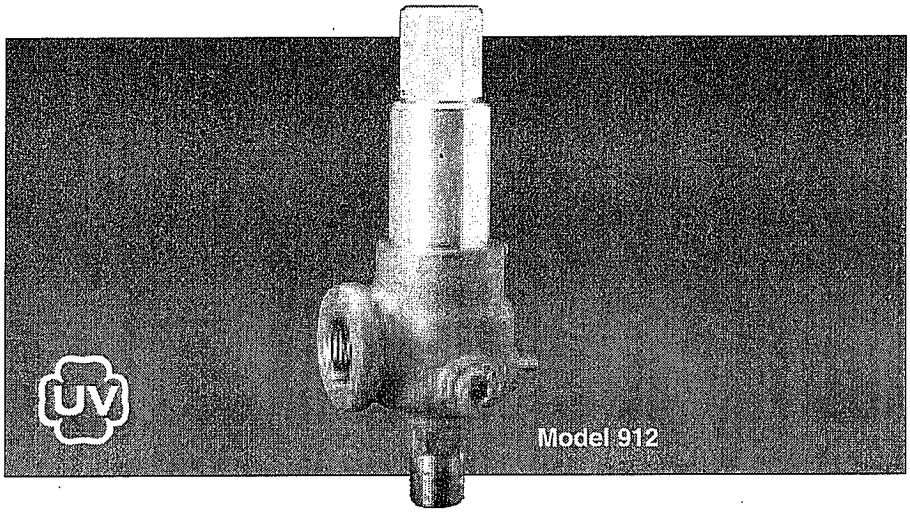

Features and Benefits

- **Available** with soft seat.
- **Threaded cap** is standard (back pressure tight).
- **Hex on valve nozzle** provides for easy installation.
- **Single control ring** offers easy adjustability of blowdown.
- **Pivoting disc design** corrects misalignment and offers exceptional performance.
- **Guide to nozzle ratio** reduces friction.
- **Full nozzle design** for optimum flow performance.
- **Threaded side outlet** for piped off discharge to eliminate fugitive emissions.

Model Descriptions

Model 912: Full nozzle design. SS warn ring and disc with brass/bronze base. Bronze/brass body and bonnet.

Model 913: Full nozzle design. Bronze/brass body and bonnet. 316 SS trim (base, disc and disc holder).

Model 918: Same as Model 912 except resilient seat/seal. Superior 'leak-free' performance.

Model 919: Same as Model 913 except resilient seat/seal. Superior 'leak-free' performance. Bronze body and bonnet. 316 SS trim (base, disc and disc holder).

Options

- Threaded cap. (Variation 01)
- Threaded cap with gag. (Variation 02)
- Plain lever. (Variation 03)
- Plain lever with gag. (Variation 04)
- Plain lever with vibration dampener. (Variation 05)
- Packed lever. (Variation 06)
- Packed lever with gag. (Variation 07)

Note

1. ASME standard valves for air or steam service must have lift lever. For steam boilers and generators.

© 1998 Anderson Greenwood reserves the right to change

Stainless Steel Pump Connectors

Standard Features:

- Constructed of stainless steel annular corrugated metal surrounded with a woven wire braid of high tensile stainless steel
- High pressure and temperature capabilities
- Absorbs pump vibration and noise
- Reduces piping stress due to minor misalignment and pressure variations

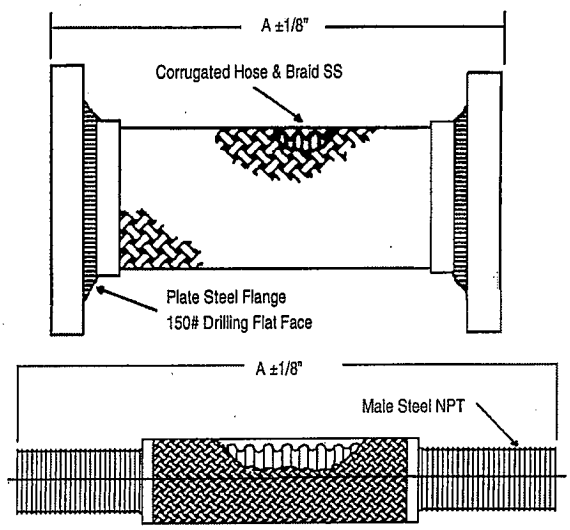

**Ratings for constant pressures. Use 1/2 of ratings for pulsating pressures and 1/6 of ratings for surge pressures.*

For Temperatures Above 70°F

For safe working pressures above 70°F, multiply pressure shown at 70°F by correction factor of required temperature.

Correction Factors

Temperature °F	Factor
70	1.00
200	.94
300	.88
400	.83
500	.78
600	.74

Dimensions

Model No.	Pipe Size x Length (A)	Pressure @ 70°F*
Mini Length: Flanged Ends		
FLXCON-002	2 x 9	350
FLXCON-025	2½ x 9	275
FLXCON-003	3 x 9	275
FLXCON-004	4 x 9	230
FLXCON-005	5 x 11	265
FLXCON-006	6 x 11	240
FLXCON-008	8 x 12	185
FLXCON-010	10 x 13	165
FLXCON-012	12 x 14	155
FLXCON-014	14 x 14	150
Long Length: Flanged Ends		
FLXCON-002EL	2 x 10	350
FLXCON-025EL	2½ x 10¼	275
FLXCON-003EL	3 x 10⅝	275
FLXCON-004EL	4 x 11¾	230
FLXCON-005EL	5 x 13⅝	265
FLXCON-006EL	6 x 14⅛	240
FLXCON-008EL	8 x 15⅜	185
FLXCON-010EL	10 x 17¾	165
FLXCON-012EL	12 x 18⅜	155
FLXCON-014EL	14 x 20	150
Standard Length: Threaded Ends		
FLXCON-050-T	½ x 10	750
FLXCON-075-T	¾ x 10	750
FLXCON-001-T	1 x 10	650
FLXCON-125-T	1¼ x 10	550
FLXCON-150-T	1½ x 10	500
FLXCON-002-T	2 x 14	475
FLXCON-250-T	2½ x 16	375
FLXCON-003-T	3 x 16	325

JOB NAME _____
LOCATION _____
_____
_____
CONTRACTOR _____
CONTRACTOR P.O. NO. _____

ITEMS	QUANTITY