GAINESVILLE VAMC DATA CENTER & EHRM INFRASTRUCTURE UPGRADES DESIGN

Department of Veterans Affairs Medical Center

1601 S.W. ARCHER RD. GAINESVILLE, FL. 32608

PROJECT #: 573-21-106

RDC / JOHN POE ARCHITECTS
ARCHITECTURE PLANNING INTERIOR DESIGN
524 FERNWOOD AVENUE
ALTAMONTE SPRINGS, FLORIDA 32701
407.830.6522 P

ABOVE GROUP INC.
MECHANICAL ELECTRICAL COMMISSIONING TECHNOLOGY
400 EAST PRATT STREET
BALTIMORE, MD 21202
1.443.788.4200 P

PENNONI
STRUCTURAL ENGINEER
5755 RIO VISTA DRIVE
CLEARWATER, FL 33760
727.536.8772 P

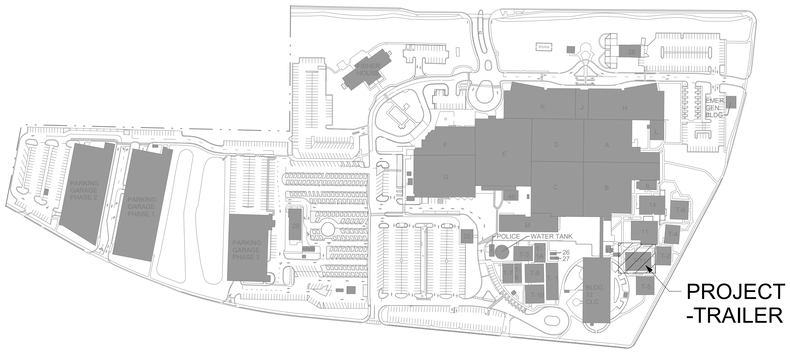

N Campus Map
Scale: N.T.S.

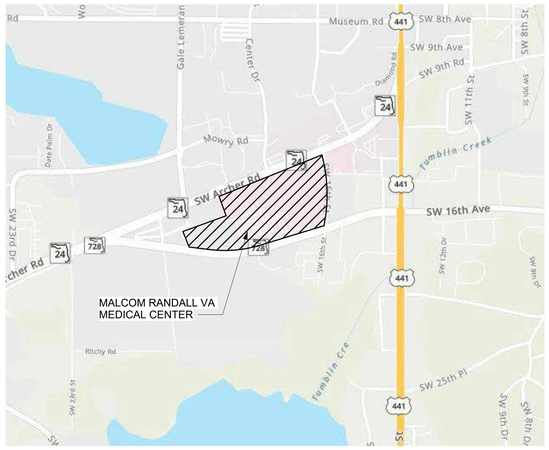

N VICINITY MAP
Scale: N.T.S.

GENERAL CONSTRUCTION NOTES

* PLEASE NOTE THAT THE TERM PROJECT ENGINEER REFERS TO THE CONTRACTING OFFICER'S REPRESENTATIVE (C.O.R.).

1. ALL WORK SHALL COMPLY WITH THE LATEST NFPA 101 LIFE SAFETY CODE, INTERNATIONAL BUILDING CODE, AND OTHER CODES AS IDENTIFIED IN VHA PROGRAM GUIDE PG-18-3, TOPIC 01, CODES, STANDARDS AND EXECUTIVE ORDERS WHICH CAN BE FOUND ON THE DEPARTMENT OF VETERAN AFFAIRS, TECHNICAL INFORMATION LIBRRARY WEBSITE.
2. ALL WORK SHALL COMPLY WITH REQUIREMENTS OF THE LATEST ARCHITECTURAL BARRIERS ACT ACCESSIBILITY STANDARD (ABAAS) AND DEPARTMENT OF VETERANS AFFAIRS BARRIER FREE DESIGN GUIDE PG-18-13 WHICH CAN BE FOUND ON THE DEPARTMENT OF VETERANS AFFAIRS TECHNICAL INFORMATION LIBRARY WEBSITE.
3. CONTRACTOR IS RESPONSIBLE TO VISIT THE SITE, EXAMINE AND ACCEPT EXISTING CONDITIONS PRIOR TO BIDDING. SITE VISITS TO BE COORDINATED WITH THE CONTRACTING OFFICER'S REPRESENTATIVE.
4. CONTRACTOR IS RESPONSIBLE TO REPAIR AND/OR REFINISH, TO MATCH ADJACENT EXISTING SURFACES, ANY EXISTING MATERIALS TO REMAIN THAT ARE DAMAGED DURING THE COURSE OF DEMOLITION OR NEW WORK.
5. WHERE REMOVAL OF EXISTING WORK IS REQUIRED FOR INSTALLATION OF NEW WORK, CONTRACTOR SHALL REPAIR EXISTING CONSTRUCTION TO REMAIN OR PROVIDE NEW CONSTRUCTION TO MATCH EXISTING ADJACENT SURFACES TO REMAIN.
6. CONTRACTOR IS RESPONSIBLE TO FIELD VERIFY ALL CONDITIONS AND DIMENSIONS PRIOR TO ORDERING, FABRICATING OR INSTALLING NEW MATERIALS.
7. CONTRACTOR IS RESPONSIBLE TO VERIFY SIZES OF ALL EQUIPMENT, ETC. TO BE INSTALLED AS PART OF THIS PROJECT, AND WHERE NECESSARY, MAKE SPECIAL PROVISIONS TO INSTALL EQUIPMENT THAT IS TOO LARGE TO FIT THROUGH FINISHED OPENINGS.
8. CONTRACTOR SHALL PROVIDE WOOD BLOCKING AT TOILET ACCESSORIES, HAND RAILS, BUMPER RAILS, SHELVING, CASEWORK, MOUNTING BRACKETS AND OTHER WALL MOUNTED ITEMS, AS INDICATED IN THE CONTRACT DOCUMENTS AND AS RECOMMENDED BY PRODUCT MANUFACTURERS. ALL WOOD BLOCKING SHALL BE FIRE RETARDANT TREATED.
9. ALL EXPOSED NEW WORK IS TO RECEIVE NEW FINISHES UNLESS SPECIFICALLY NOTED OTHERWISE. IF NO FINISH IS INDICATED AT A PARTICULAR SURFACE, CONTRACTOR SHALL PROVIDE FINISH(S) AS INDICATED AT SIMILAR CONDITIONS.
10. CONTRACTOR SHALL PROVIDE COMPLETE AND FULLY OPERATIONAL SYSTEMS WHICH COMPLY WITH STATED CODES AND REGULATIONS. WHERE THE OMISSION OF A PART OR ELEMENT OF A SYSTEM WOULD RESULT IN THE NON-OPERATION, OR INCORRECT OPERATION OF A SYSTEM, CONTRACTOR SHALL INCLUDE SAID PART OR ELEMENT AS PART OF THE WORK.
11. ALL PENETRATIONS THROUGH NEW AND/OR EXISTING SMOKE OR FIRE RATED WALLS SHALL BE SMOKE/FIRE STOPPED AS REQUIRED BY THE RATING OF THE WALL.
12. CONTRACTOR IS RESPONSIBLE FOR IDENTIFICATION AND REMOVAL OF HAZARDOUS MATERIALS ENCOUNTERED DURING CONSTRUCTION.

VOLUME 01 - DRAWING INDEX

GI001	COVER SHEET
GI002	CODE DATA
VF - 021	EXISTING CONDITIONS
GK-072	EROSION CONTROL NOTES AND DETAILS
GC-051	EROSION CONTROL PLAN
CS-101	SITE PLAN
CG-151	GRADING AND DRAINAGE PLAN
CS-171	UTILITY PLAN
CK-601	SITE DETAILS
AD101	DEMOLITION PLAN
A001	WALL TYPES
A101	FLOOR PLANS
A102	ROOF PLAN
A201	EXTERIOR ELEVATIONS
A301	BUILDING SECTIONS
A311	WALL SECTIONS
A312	WALL SECTIONS
A601	DOOR SCHEDULE & DETAILS
AF101-F	FINISH PLANS & LEGEND
S001	STRUCTURAL GENERAL NOTES
S002	WIND TABLES & SCHEDULES
S100	FOUNDATION PLAN
S102	ROOF FRAMING PLAN
S501	FOUNDATION DETAILS
S502	MASONRY DETAILS
S510	FRAMING DETAILS
S601	BUILDING SECTION
S602	WALL SECTIONS
S701	ISOMETRIC VIEW
FA001	FIRE ALARM LEGENDS & SYMBOLS
FA101	FIRE ALARM FLOOR PLAN - DATA CENTER
FP001	FIRE PROTECTION LEGENDS & SYMBOLS
FP101	FIRE PROTECTION FLOOR PLANS - DATA CENTER
FP501	FIRE PROTECTION DETAILS - DATA CENTER
P-001	PLUMBING NOTES, LEGENDS, & SYMBOLS
P-101	PLUMBING PRESSURE AND GRAVITY PLANS -DATA CENTER
P-501	PLUMBING DETAILS AND SCHEDULES -DATA CENTER
P-601	PLUMBING ISOMETRICS - DATA CENTER
M-001	MECHANICAL NOTES, LEGENDS, & SYMBOLS
MH101	MECHANICAL FIRST FLOOR PLAN -DATA CENTER NEW WORK
MH102	MECHANICAL ROOF PLAN -DATA CENTER NEW WORK
M-301	MECHANICAL SECTIONS
M-501	MECHANICAL DETAILS
M-502	MECHANICAL DETAILS
M-701	MECHANICAL CONTROLS
M-702	MECHANICAL CONTROLS
M-703	MECHANICAL CONTROLS
M-801	MECHANICAL SCHEDULES
E-001	ELECTRICAL LEGENDS & SYMBOLS
E-002	ELECTRICAL GENERAL NOTES
E-100	ELECTRIC SITE PLAN
EL101	ELECTRICAL FLOOR PLANS -DATA CENTER -LIGHTING
EP101	ELECTRICAL FLOOR PLANS -DATA CENTER -POWER
EP102	ELECTRICAL ROOF PLAN -DATA CENTER
E-501	ELECTRICAL DETAILS
E-502	ELECTRICAL DETAILS
E-601	ELECTRICAL DIAGRAMS
E-801	ELECTRICAL SCHEDULES
E-802	ELECTRICAL SCHEDULES
T-001	TELECOM LEGEND, ABBREV, AND GENERAL NOTES
T-101	TELECOM FLOOR PLANS -DATA CENTER
T-501	TELECOM -TYPICAL RACK ELEVATIONS
T-502	TELECOM -TYPICAL RACK ELEVATIONS
T-503	TELECOM -TYPICAL DATA CENTER DETAILS
T-601	DATA CENTER CABLING MAP

1/A101	EXTERIOR ELEVATION	XX	WINDOW OPENING
A101 X	INTERIOR ELEVATION	101	DOOR OPENING
SIM 1 / A101	SECTION/DETAIL NUMBER DRAWING NUMBER	X X	ROOM NAME ROOM NUMBER
X	EQUIPMENT TAG	XX.X-X	WALL TYPE
X	COLUMN GRID	10'-8"	CEILING HEIGHT
X	NOTE	X	FINISH DESIGNATION
X	TOILET ACCESSORY TAG	X	SIGNAGE TAG

Revisions	Date

CONSULTANT

ARCHITECT/ENGINEER OF RECORD
RDC JPA ARCHITECTURE
524 Fernwood Drive, Altamonte Springs, Florida 32701 | www.rdcjpa.com | 800.362.1523

STAMP
STATE OF FLORIDA JASON R. ROSS REGISTERED ARCHITECT AR101907

Office of Construction and Facilities Management
U.S. Department of Veterans Affairs

Drawing Title: COVER SHEET	Phase: BID DOCUMENTS	Project Title: GAINESVILLE VAMC DATA CENTER & EHRM INFRASTRUCTURE UPGRADES DESIGN	Project Number: VA Project No. 573-21-106; RDC/JPA Project No. 23072.00
			Building Number: 43
Approved: STATION CHIEF - EDWIN BURNETT	FULLY SPRINKLERED	Location: GAINESVILLE FL	Drawing Number: GI001
		Issue Date: 04.20.2026 / Checked: JC / Drawn: AC	

VA FORM 08 - 6231

4/20/2026 5:01:07 PM

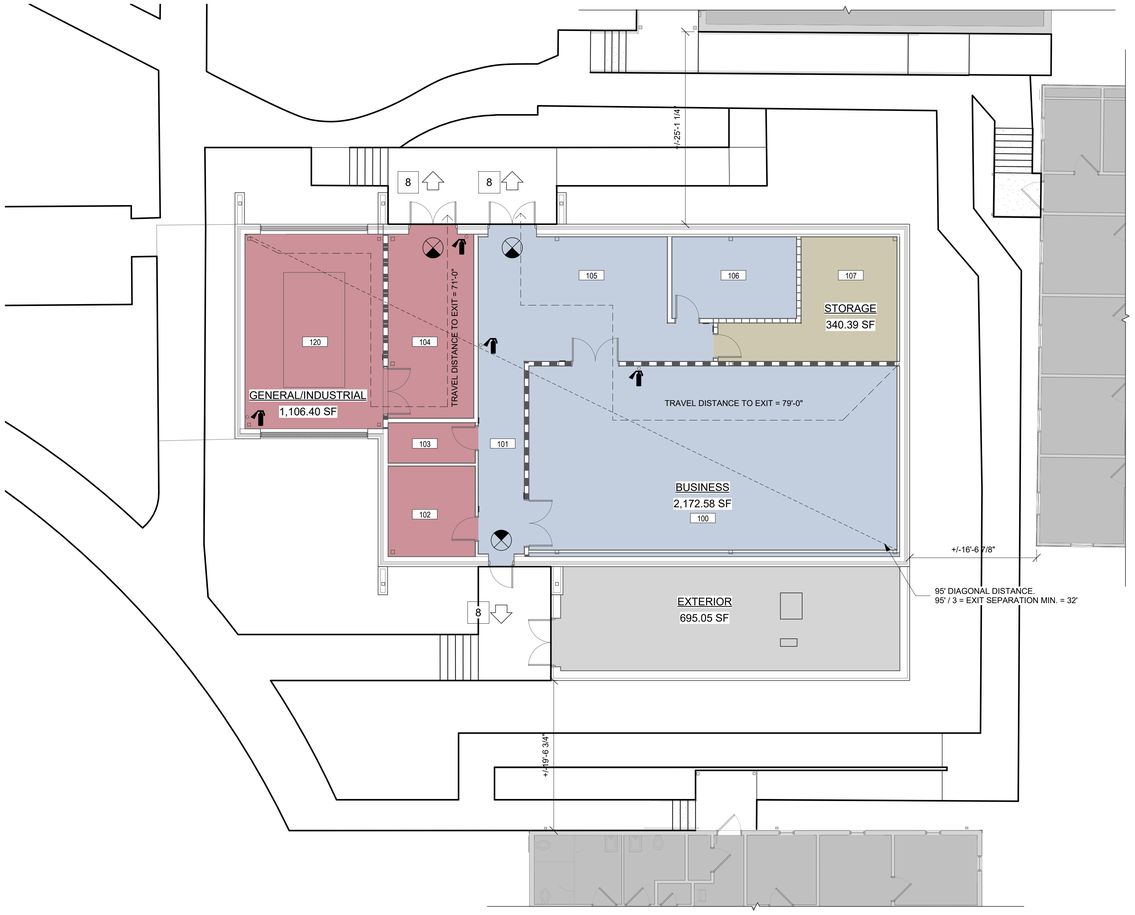

N 1 **01-Code Review Plan**

Scale: 1/8" = 1'-0"

Applicable Codes:
VA Directives, Design Manuals, Master Specifications, VA National CAD Standard Application Guide, and other Guidance on the Technical Information Library (TIL) (www.cfm.va.gov/til/)
2024 NFPA 101, Life Safety Code
NFPA National Fire Codes, with the exception of NFPA 5000 and NFPA 900
2021 International Building Code (IBC), only when specifically referenced in VA Design Documents
Occupational, Safety and Health Administration (OSHA) Standards.
VA Seismic Design Requirements, H-18-8
Architectural Barriers Act Accessibility Standards (ABAAS) including VA supplement, Barrier Free Design Guide (PG-18-13), rev. 06/01/2024

2024 NFPA 101, LIFE SAFETY CODE SUMMARY:
Building Construction Type: II (000)
Fully Sprinklered
Fire Alarm System Provided
Emergency Lighting Provided
Gaseous suppression system initiated by VESDA system Provided.

Chapter 6, Classification of Occupancy and Hazard Contents
6.1.11. Business, Chapter 38

Chapter 7, Means of Egress
Table 7.3.1.2, Occupant Load Factor:
Business Use: 150 occupants per s.f. x 3,918 s.f. = 27 Occupants

Table A.7.6, Common Path, Dead End, and Travel Distance Limits: Business Use
Nonsprinklered
Common path limit: 100 feet
Dead end limit: 50 feet
Travel distance limit: 300 feet

Chapter 8, Features of Fire Protection
Table A.8.2.1.2, Fire Resistance Ratings for Type II (000) Construction (IBC 2021, 2B):
Exterior bearing walls, supporting more than one floor, columns or other bearing walls: 0 hour
Supporting one floor only: 0 hour
Supporting Roof only: 0 hour
Interior bearing walls, supporting more than one floor, columns or other bearing walls: 0 hour
Supporting one floor only: 0 hour
Supporting Roof only: 0 hour
Columns, supporting more than one floor, columns or other bearing walls: 0 hour
Supporting one floor only: 0 hour
Supporting Roof only: 0 hour
Beams, Girders, Trusses, and Arches, supporting more than one floor, columns or other bearing walls: 0 hour
Supporting one floor only: 0 hour
Supporting Roof only: 0 hour
Floor/Ceiling assemblies: 0 hour
Roof Ceiling assemblies: 0 hour
Interior nonbearing walls: 0 hour
Exterior nonbearing walls: 0 hour

Chapter 9, Building Service and Fire Protection Equipment
The building is protected throughout by a sprinkler system.
The building is supplied with portable fire extinguishers in accordance with 2024 NFPA 101 LSC, Sections 9.9.

Chapter 10, Interior Finish, Contents, and Furnishings
Table A.10.2.2, Interior Finish Classification Limitations: Business Use
Exits: Class A or B (Class I or II)
Exit access corridors: A o B
Other spaces: Class A, B or C (N/A)

BUILDING AREA LEGEND

- (none)
- Business Use
- General and high hazard industrial
- Storage in other than storage and mercantile occupancies

Room Schedule

RM #	Name	Area
100	DATA CENTER ROOM	1,152.00 SF
101	CORRIDOR	147.16 SF
102	MECHANICAL	134.13 SF
103	HAC	59.66 SF
104	ELEC	268.00 SF
105	UNPACKING / PACKING STAGING	436.36 SF
106	ENTRANCE ROOM	172.71 SF
107	STORAGE	202.99 SF
120	GENERATOR ROOM	457.73 SF
Grand total		3,030.75 SF

Occupancy Schedule

Use	Area	Area per Person	Occupants
Business Use	2,172.58 SF	150.00 SF	15
General and high hazard industrial	1,106.40 SF	100.00 SF	12
Storage in other than storage and mercantile occupancies	340.39 SF	500.00 SF	1
(none)	695.05 SF		
Grand total: 4	4,314.41 SF		28

CODE LEGEND

- 0-HR Smoke Partition - [OBC 710] / NFPA 101-8.4
- 1-HR Smoke Barrier - [OBC 709] / NFPA 101-8.5
- 1-HR Fire Barrier - [OBC 706] / NFPA 101-8.3
- 2-HR Fire Barrier - [OBC 706] / NFPA 101-8.3
- Means of Egress
- New Wall
- FEC — Fire Extinguisher Location
- # — Occupancy Load Exit Capacity
- Exit Sign

4/20/2026 5:01:10 PM

Revisions	Date

CONSULTANT

ARCHITECT/ENGINEER OF RECORD
RDC JPA ARCHITECTURE
524 Fernwood Drive, Altamonte Springs, Florida 32701 | www.rdcjpa.com | 800.362.1523

STAMP
STATE OF FLORIDA · JASON H. ROSS · REGISTERED ARCHITECT · AR101907

Office of Construction and Facilities Management
VA U.S. Department of Veterans Affairs

Drawing Title	CODE DATA
Phase	BID DOCUMENTS
Project Title	GAINESVILLE VAMC DATA CENTER & EHRM INFRASTRUCTURE UPGRADES DESIGN
Project Number	VA Project No. 573-21-106 RDC/JPA Project No. 23072.00
Approved:	STATION CHIEF - EDWIN BURNETT
	FULLY SPRINKLERED
Location	GAINESVILLE FL
Building Number	43
Issue Date	04.20.2026
Checked	JC
Drawn	AC
Drawing Number	GI002

VA FORM 08 - 6231

SITE INFORMATION:

ADDRESS: 1601 SW ARCHER RD
GAINESVILLE, FL 32608

CONTRACTING OFFICER: U.S. DEPT. OF VETERANS AFFAIRS
1601 SW ARCHER RD
GAINESVILLE, FL 32608

ENGINEER: PENNONI
JASON SHERIDAN, PE
5755 RIO VISTA DRIVE
CLEARWATER, FL 33760

EXISTING LEGEND

EXISTING BUILDING
EXISTING CURB
EXISTING EDGE OF PAVEMENT
EXISTING FENCE
EXISTING SIDEWALK
EXISTING MINOR CONTOUR (101)
EXISTING MAJOR CONTOUR (100)
EXISTING ASPHALT DRIVEWAY
EXISTING GRAVEL PAVEMENT
EXISTING DIRT DRIVE
PROJECT BOUNDARY LIMITS
EXISTING SPOT ELEVATION (× 100.55)
EXISTING COMMUNICATION, UNDERGROUND (UC)
EXISTING NATURAL GAS, UNDERGROUND (UG)
EXISTING POWER, UNDERGROUND (UE)
EXISTING OVERHEAD ELECTRIC (OE)
EXISTING SANITARY SEWER, UNDERGROUND (FM)
EXISTING STORM SEWER, UNDERGROUND (D)
EXISTING WATER, UNDERGROUND (W)
EXISTING SOLAR PANEL
EXISTING OVERGROWTH
EXISTING TRANSFORMER
EXISTING MANHOLES
EXISTING VALVES
EXISTING JUNCTION BOX
EXISTING SANITARY SEWER, CLEAN-OUT
EXISTING STORM SEWER, ROOF DRAIN
EXISTING STORM SEWER, INLET
EXISTING WATER STRUCTURES
EXISTING TREES
EXISTING BOLLARD
EXISTING SIGN
EXISTING UTILITY POLE
BORING LOCATION
EXISTING LIGHT

GENERAL NOTES:

1. TOPOGRAPHIC INFORMATION OBTAINED FROM FIELD SURVEY PERFORMED BY PENNONI ASSOCIATES.
2. ELEVATIONS BASED ON NATIONAL GEODETIC SURVEY BENCHMARKS NO. "207" BEING 16.51 FEET, AND NO. "208" BEING A TIDAL BENCHMARK AT 13.28 FEET, ON THE NORTH AMERICAN VERTICAL DATUM OF 1988 (NAVD 88).
3. UNLESS SPECIFICALLY STATED OR SHOWN HEREON TO THE CONTRARY, THIS SURVEY IS MADE SUBJECT TO AND DOES NOT LOCATE OR DELINEATE:
   A. RIGHTS OR INTERESTS OF THE UNITED STATES OF AMERICA OR THE PINELLAS COUNTY, OVER LANDS NOW OR FORMERLY FLOWED BY TIDEWATER, BUT NO LONGER VISIBLE OR PHYSICALLY EVIDENT, OR LANDS CONTAINING ANY ANIMAL, MARINE, OR BOTANICAL SPECIES REGULATED BY OR UNDER THE JURISDICTION OF ANY FEDERAL, STATE, OR LOCAL AGENCY.
   B. BUILDING SETBACK LINES, ZONING REGULATIONS OR LINES ESTABLISHED BY ANY FEDERAL, STATE OR LOCAL AGENCY WHICH MAY AFFECT THE BUILDING OR DEVELOPMENT POTENTIAL OF THE SUBJECT PROPERTY.
4. LOCATIONS OF ON AND OFF SITE UTILITIES AS SHOWN ARE APPROXIMATE AND MAY OR MAY NOT BE COMPLETE. THE NATURE AND EXACT LOCATION OF EXISTING UTILITIES SHOULD BE VERIFIED PRIOR TO INITIATING ANY ACTIVITY THAT MAY AFFECT THEIR USE OR LOCATION.
5. A. THE LOCATION OF THE EXISTING UNDERGROUND UTILITIES SHOWN ON THIS PLAN HAVE BEEN TAKEN FROM EXISTING UTILITY RECORDS AVAILABLE AT THE TIME THESE PLANS WERE PREPARED AND FROM SURFACE OBSERVATION OF THE SITE.
   B. COMPLETENESS OR ACCURACY OF LOCATION AND DEPTH OF UNDERGROUND UTILITIES AND STRUCTURES IS NOT GUARANTEED.
   C. IN ACCORDANCE WITH "UNDERGROUND FACILITY DAMAGE PREVENTION AND SAFETY ACT" FLORIDA STATUTES, CHAPTER 556. THE CONTRACTOR SHALL NOTIFY ALL UTILITIES WITHIN THE WORK AREA VIA THE SUNSHINE ONE CALL SYSTEM, INC. (800-432-4770) A MINIMUM OF 2 WORKING DAYS BEFORE THE START OF EXCAVATION
   D. THE CONTRACTOR SHALL VERIFY LOCATIONS AND DEPTHS OF ALL UNDERGROUND UTILITIES AND STRUCTURES BEFORE THE START OF WORK.

FLOOD ZONE INFORMATION:

THE PROPERTY SHOWN LIES WITHIN "MODERATE FLOODING AREA" X AS SHOWN ON FLOOD INSURANCE RATE MAPS NO. 12001C0313E, COMMUNITY PANEL NUMBER 0313E, EFFECTIVE SEPTEMBER 24, 2021.

Revisions		Date

CONSULTANT

PENNONI ASSOCIATES INC.
5755 Rio Vista Dr
Clearwater, FL 33760
T 727.451.9561
Florida COA: 7819

ARCHITECT/ENGINEER OF RECORD

STAMP
MICHAEL JASON SHERIDAN
LICENSE
No 88424
STATE OF FLORIDA
PROFESSIONAL ENGINEER

Office of Construction and Facilities Management
VA U.S. Department of Veterans Affairs

Drawing Title	Phase	Project Title	Project Number RDCJP 23010
EXISTING CONDITIONS	BID DOCUMENTS	CONSTRUCT EHRM INFRASTRUCT	VA Project No. 573-21-106 RDC/JPA Project No. 0122085
			Building Number: BUILDING
Approved: STATION CHIEF - EDWIN BURNETT	FULLY SPRINKLERED	Location: GAINSVILLE, FL	Drawing Number: VF - 021
		Issue Date: 04.20.2026 / Checked: JS / Drawn: AA	

VA FORM 08 - 6231

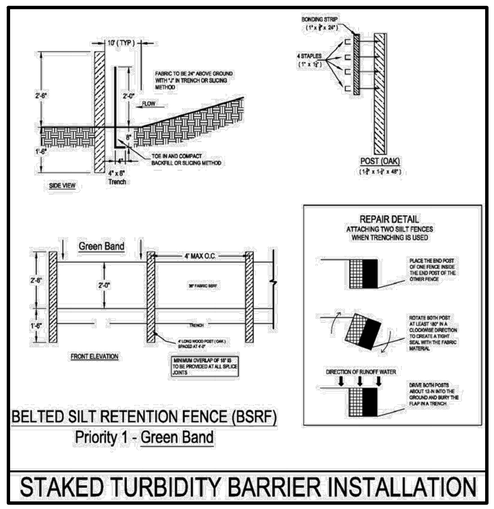

BELTED SILT RETENTION FENCE (BSRF)

Priority 1 - Green Band

STAKED TURBIDITY BARRIER INSTALLATION

DETAIL- STAKED TURBIDITY BARRIER DETAIL

N.T.S.

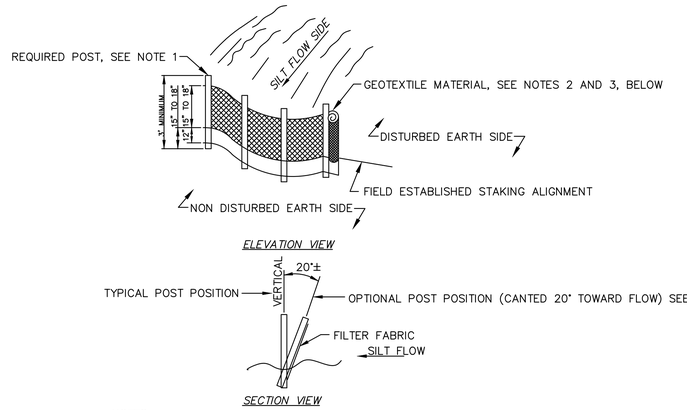

NOTES:

1. POST; 2"X2" WOOD, P.T. OR 2–1/2" ø STEEL AT 6'–0" CENTERS MAXIMUM.
2. GEOTEXTILE; GRAB TENSILE AT 90 LBS, TRAPEZOIDAL TEAR AT 35 LBS., MULLEN BURST AT 180 PSI.
3. GEOTEXTILE MATERIAL SHALL BE BURIED IN THE GROUND A MINIMUM OF 12" AND BACK FILLED.
4. ALSO SEE FDOT INDEX 199, "GEOTEXTILE CRITERIA", EROSION CLASS. 5. OPTIONAL POST POSITION REQUIRED WHEN SLOPE IS GREATER THAN 1:2.

DETAIL- STAKED SILT BARRIER DETAIL

N.T.S.

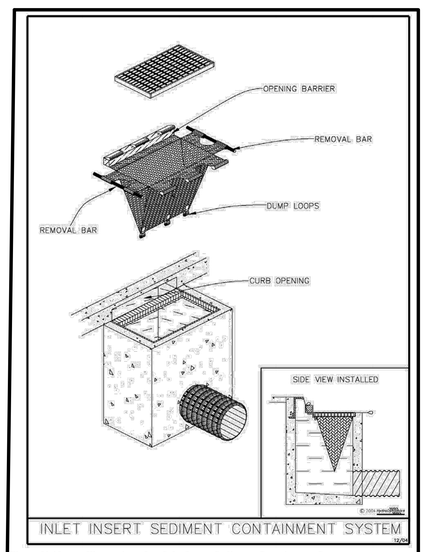

Figure V-18: Illustration of an Inlet Insert Sediment Containment System

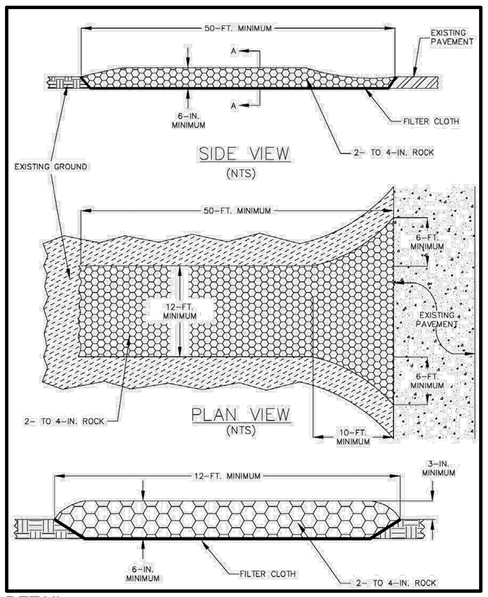

DETAIL- SOIL TRACKING PREVENTION DEVICE

N.T.S.

EROSION AND SEDIMENTATION CONTROL NOTES

1. IT IS THE RESPONSIBILITY OF THE CONTRACTOR TO CONTROL AND PREVENT EROSION AND THE TRANSPORTATION OF SEDIMENT TO SURFACE DRAINS AND OUTFALLS. REFER TO CONSTRUCTION PLANS, DETAILS, SPECIFICATIONS AND APPROVED PERMITS FOR DETAILS. SEDIMENT DEPOSITS SHALL BE REMOVED WHEN THEY REACH SIX INCHES ON AN EROSION DEVICE.
2. DURING THE CONSTRUCTION OF DRAINAGE STRUCTURES, AND OTHER STRUCTURES REQUIRING EXCAVATION, THE CONTRACTOR SHALL PLACE APPROVED BARRIERS OR OTHER APPROVED DEVICES AROUND SUCH STRUCTURES TO PREVENT EROSION AND THE MIGRATION OF SEDIMENT TO POINTS OUTSIDE THE CONSTRUCTION AREA. THE APPROVED BARRIERS OR OTHER APPROVED DEVICES SHALL BE PLACED IN ACCORDANCE WITH REQUIREMENTS OF F.D.O.T. INDEX NO. 102, FDEP, OR AS DIRECTED BY THE ENGINEER.
3. REQUIRED EROSION CONTROL MEASURES MUST REMAIN INTACT THROUGHOUT CONSTRUCTION. FAILURE TO INSTALL OR PROPERLY MAINTAIN REQUIRED EROSION CONTROL WILL RESULT IN ENFORCEMENT. ALL EROSION CONTROL MEASURES, SAND, SILT, AND DEBRIS SHALL BE REMOVED FROM ALL DRAINAGE PIPES AND STRUCTURES AFTER CONSTRUCTION HAS BEEN COMPLETED AND PRIOR TO COUNTY FINAL WALK-THROUGH.
4. OUTFALL PROTECTION - PROJECT PIPE OR DITCH DISCHARGES INTO OFF-SITE OUTFALLS SHALL BE INSPECTED DAILY FOR POSSIBLE SEDIMENT BUILDUP OR TRANSPORT. OUTFALLS SHALL BE PROTECTED THROUGH USE OF EROSION CONTROL FEATURES AS NECESSARY TO CONTAIN ANY SEDIMENT LOSS TO THE IMMEDIATE AREA OF THE PROJECT. ANY SEDIMENT BUILDUP OR TRANSPORT OFF-SITE SHALL BE THE CONTRACTOR'S RESPONSIBILITY TO REMEDY. THE CONTRACTOR SHALL USE APPROPRIATE MEASURES AS DIRECTED BY THE PROJECT ENGINEER FOR OUTFALL PROTECTION.
5. APPROVED BARRIERS (OR OTHER APPROVED SEDIMENT CONTROL DEVICES): THESE SHALL BE PLACED AT THE BASE OF ANY SLOPE WHERE A RAINFALL EVENT COULD ERODE A SLOPE AND TRANSPORT SEDIMENTS OFF-SITE. APPROVED BARRIERS SHALL BE DOUBLE STAKED IN ACCORDANCE WITH F.D.O.T. INDEX NO. 102 OR FDEP. IF EROSION DEPOSITS REACH THE TOP ELEVATION OF EXISTING APPROVED BARRIERS, THEN SEDIMENTS SHOULD BE REMOVED. ANY DAMAGED OR INEFFECTIVE APPROVED BARRIERS ARE TO BE REPLACED WITH NEW ONES. THE LOCATION AND INSTALLATION OF APPROVED BARRIERS SHALL BE AS DIRECTED BY THE PROJECT ENGINEER.
6. BACK OF SIDEWALK INLETS OR MEDIAN INLETS: THESE SHALL BE PROTECTED FROM SEDIMENT INTAKE UNTIL PROJECT IS COMPLETE. ELEVATION OF GROUND OUTSIDE INLET TOP SHALL NOT BE HIGHER THAN INLET TOP. APPROVED BARRIERS OR OTHER APPROVED SEDIMENT CONTROL DEVICES SHALL BE INSTALLED AROUND INLET TOP. A SECOND ROW OF APPROVED BARRIERS OR OTHER APPROVED SEDIMENT CONTROL DEVICES SHALL BE PLACED AROUND INLET APPROXIMATELY 4" OUTSIDE FIRST ROW. BETWEEN ROWS THERE SHALL BE A DEPRESSION TO ACT AS A SEDIMENT BASIN. COMPLETED INLETS IN PAVED AREAS SHALL ALSO BE PROTECTED WITH A SINGLE LINE OF APPROVED BARRIERS OR OTHER APPROVED SEDIMENT CONTROL DEVICES TO PREVENT SEDIMENT INTAKE FROM OTHER AREAS.
7. STOCKPILED MATERIALS SHALL BE PROTECTED BY COVER, APPROVED BARRIERS OR OTHER APPROVED SEDIMENT CONTROL DEVICES.
8. ALL DISTURBED AREAS SHALL BE STABILIZED WITHIN 3 DAYS AFTER 1/2" RAIN EVENT DISTURBANCE.
9. CONTRACTOR IS RESPONSIBLE FOR OBTAINING THE NECESSARY DEWATERING PERMITS FROM THE LOCAL WATER MANAGEMENT DISTRICT OR OTHER REGULATORY AGENCY.
10. A DEWATERING PLAN MUST BE SUBMITTED AND APPROVED BY THE ENGINEER PRIOR TO DISCHARGE.
11. IF WIND EROSION BECOMES SIGNIFICANT DURING CONSTRUCTION, THE CONTRACTOR SHALL STABILIZE THE AFFECTED AREA USING SPRINKLING, IRRIGATION, OR OTHER ACCEPTABLE METHODS.
12. THERE IS TO BE NO DISCHARGE (I.E. PUMPING, SHEET FLOW, SWALE, DITCH, ETC.) INTO EXISTING DITCHES OR CANALS WITHOUT THE USE OF SETTLING PONDS OR DEVICES. IF THE CONTRACTOR DESIRES TO DISCHARGE INTO EXISTING DITCHES OR CANALS A SETTLING PLAN PREPARED BY THE CONTRACTOR MUST BE SUBMITTED TO AND APPROVED BY THE ENGINEER OF RECORD AND LOCAL REGULATORY AGENCY PRIOR TO CONSTRUCTION.
13. WHERE APPLICABLE, SOIL TRACKING PREVENTION DEVICES SHALL BE PROVIDED AND MAINTAINED PER F.D.O.T. INDEX NO. 106 OR FDEP.
14. ALL EROSION CONTROL FENCES, BARRIERS, AND SILTATION DEVICES SHALL BE ERECTED PRIOR TO ANY LAND ALTERATIONS, SHALL BE MAINTAINED IN GOOD WORKING ORDER DURING CONSTRUCTION, AND REMOVED FOLLOWING SOIL STABILIZATION AND FINAL DRESSING. BUILT-UP SEDIMENT WILL BE REMOVED FROM SILT FENCES AND STAKED TURBIDITY BARRIERS WHEN IT HAS REACHED ONE THIRD THE HEIGHT OF THE FENCE/BARRIER. STOCKPILE AREAS SHALL INCLUDE SILT FENCE AROUND THE PERIMETER.
15. THE CONTRACTOR SHALL NOT RESTRICT OR BLOCK THE EXISTING DRAINAGE FLOW OVERLAND OR WITHIN RESHAPED SWALES. FLOW WITHIN EXISTING DRAINAGE PIPES SHALL BE MAINTAINED AT ALL TIMES. STORMWATER WILL BE CONVEYED VIA EXISTING SWALES, DITCHES, OR PROPOSED DITCHES, EXISTING AND PROPOSED STORM SEWERS.
16. DURING DEWATERING OPERATIONS, THE CONTRACTOR SHALL NOT DISCHARGE DIRECTLY TO RECEIVING WATERS, EXISTING CONVEYANCES TO RECEIVING WATERS, OR WETLAND SYSTEMS. TEMPORARY SEDIMENT BASINS, TRAPS, OR SILTATION REDUCTION DEVICES SHALL BE UTILIZED TO COLLECT THE DISCHARGE FROM DEWATERING ACTIVITIES TO ELIMINATE THE POTENTIAL FOR OFF-SITE SEDIMENT TRANSPORT AND TO INSURE THAT DIRECT DISCHARGE DOES NOT OCCUR.
17. BANKS SHALL BE PROTECTED FROM EROSION OR COLLAPSE DURING CONSTRUCTION. BANK PROTECTION MATERIAL SHALL BE CAREFULLY PLACED FROM THE BANK AND NOT DUMPED FROM ABOVE IN AN UNCONTROLLED MANNER. EROSION CONTROL FABRIC SHALL BE USED FOR EROSION PROTECTION WHERE SOD WILL NOT HOLD OR BECOME ESTABLISHED IN TIME TO PROTECT THE BANKS. UNLESS OTHERWISE SPECIFIED IN THE PLANS, UPON COMPLETION OF CONSTRUCTION, ALL BANKS AND WATERWAYS SHALL BE RESTORED TO THEIR PRE-CONSTRUCTION CONFIGURATION AND PROTECTION FROM EROSION.

Revisions	Date

CONSULTANT

Pennoni

PENNONI ASSOCIATES INC.
5755 Rio Vista Dr
Clearwater, FL 33760
T 727.451.9561
Florida COA: 7819

ARCHITECT/ENGINEER OF RECORD

STAMP

MICHAEL JASON SIMENSON LICENSE No 88424 STATE OF FLORIDA PROFESSIONAL ENGINEER

Office of Construction and Facilities Management

VA U.S. Department of Veterans Affairs

Drawing Title	EROSION CONTROL NOTES AND DETAILS
Phase	BID DOCUMENTS
Project Title	CONSTRUCT EHRM INFRASTRUCT
Project Number RDCJP 23010	VA Project No. 573-21-106 RDCJPA Project No. 0122085
Building Number	BUILDING
Approved:	STATION CHIEF - EDWIN BURNETT
	FULLY SPRINKLERED
Location	GAINSVILLE, FL
Issue Date	04.20.2026
Checked	JS
Drawn	AA
Drawing Number	GK-072

VA FORM 08-6231

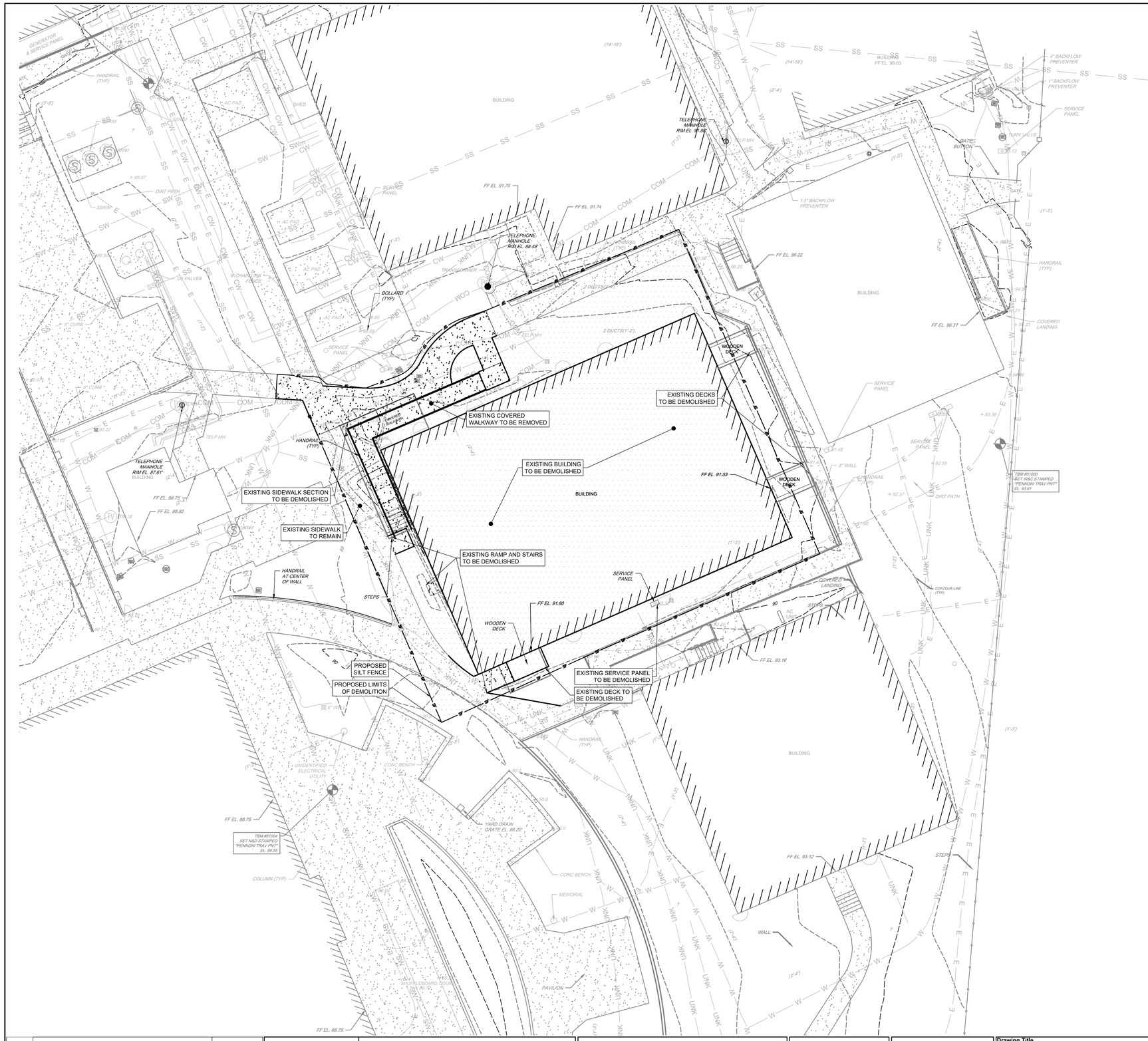

SITE INFORMATION:

ADDRESS: 10000 BAY PINES BLVD
BAY PINES, FL 33744

CONTRACTING OFFICER: U.S. DEPT. OF VETERANS AFFAIRS
10000 BAY PINES BLVD
BAY PINES, PINELLAS COUNTY, FL 33744

ENGINEER: PENNONI
JASON SHERIDAN, PE
5755 RIO VISTA DRIVE
CLEARWATER, FL 33760

NORTH

0 10' 20'

EXISTING LEGEND

- EXISTING BUILDING
- EXISTING CURB
- EXISTING EDGE OF PAVEMENT
- EXISTING FENCE
- EXISTING SIDEWALK
- EXISTING MINOR CONTOUR
- EXISTING MAJOR CONTOUR
- EXISTING ASPHALT DRIVEWAY
- EXISTING GRAVEL PAVEMENT
- EXISTING DIRT DRIVE
- PROJECT BOUNDARY LIMITS
- EXISTING SPOT ELEVATION
- EXISTING COMMUNICATION, UNDERGROUND
- EXISTING NATURAL GAS, UNDERGROUND
- EXISTING POWER, UNDERGROUND
- EXISTING OVERHEAD ELECTRIC
- EXISTING SANITARY SEWER, UNDERGROUND
- EXISTING STORM SEWER, UNDERGROUND
- EXISTING WATER, UNDERGROUND
- EXISTING SOLAR PANEL
- EXISTING OVERGROWTH
- EXISTING TRANSFORMER
- EXISTING MANHOLES
- EXISTING VALVES
- EXISTING JUNCTION BOX
- EXISTING SANITARY SEWER, CLEAN-OUT
- EXISTING STORM SEWER, ROOF DRAIN
- EXISTING STORM SEWER, INLET
- EXISTING WATER STRUCTURES
- EXISTING TREES
- EXISTING BOLLARD
- EXISTING SIGN
- EXISTING UTILITY POLE
- BORING LOCATION
- EXISTING LIGHT
- EXISTING SUPPORT POST
- EXISTING GROUNDING ROD
- EXISTING CURB STOP

DEMOLITION LEGEND

- DEMOLITION AREA
- SILT FENCE
- LINEAR DEMOLITION
- SAW CUT LIMIT
- INLET PROTECTION
- TREE PROTECTION BARRIER

EROSION CONTROL NOTES:

1. SILT FENCES (SYNTHETIC FILTER) CAN BE USED FOR 60 DAYS OR LONGER DEPENDING ON ULTRAVIOLET STABILITY AND MANUFACTURER'S RECOMMENDATIONS. HOWEVER, SILT FENCES GENERALLY HAVE A USEFUL LIFE OF ONE SEASON, AND SHOULD BE PERIODICALLY REPLACED ON LONGER DURATION CONSTRUCTION PROJECTS.
2. THE CONTRACTOR IS REQUIRED TO OBTAIN A NPDES PERMIT PRIOR TO CONSTRUCTION COMMENCEMENT.
3. CONTRACTOR MUST PROVIDE EVIDENCE THAT THE CONSTRUCTION TEAMS COMPLY WITH THE FLORIDA STORMWATER, EROSION, AND SEDIMENTATION CONTROL INSPECTOR TRAINING AND CERTIFICATION.
4. REMOVE SEDIMENT AND CLEAN OUT EROSION AND SEDIMENT CONTROL MEASURES WHEN SEDIMENT ACCUMULATION HAS REACHED 1/3 OF THE HEIGHT MEASURED.
5. INSPECT EROSION AND SEDIMENT CONTROLS AFTER ALL RAINFALL EVENTS PRODUCING 1/2" RAINFALL OR MORE.

Revisions	Date

CONSULTANT

Pennoni

PENNONI ASSOCIATES INC.
5755 Rio Vista Dr
Clearwater, FL 33760
T 727.451.9561
Florida COA: 7819

ARCHITECT/ENGINEER OF RECORD

STAMP

MICHEL JASON SHERIDAN LICENSE No 88424 STATE OF FLORIDA PROFESSIONAL ENGINEER

Office of Construction and Facilities Management

VA U.S. Department of Veterans Affairs

Drawing Title: EROSION CONTROL PLAN	Phase: BID DOCUMENTS	Project Title: CONSTRUCT EHRM INFRASTRUCT	Project Number RDCJP 23010 VA Project No. 573-21-106 RDCJPA Project No. 0122085
Approved: STATION CHIEF - EDWIN BURNETT		Location: GAINSVILLE, FL	Building Number: BUILDING
	FULLY SPRINKLERED	Issue Date: 04.20.2026 / Checked: JS / Drawn: AA	Drawing Number: GC-051

VA FORM 08 - 6231

SITE INFORMATION:

ADDRESS: 10000 BAY PINES BLVD
BAY PINES, FL 33744

CONTRACTING OFFICER: U.S. DEPT. OF VETERANS AFFAIRS
10000 BAY PINES BLVD
BAY PINES, PINELLAS COUNTY, FL 33744

ENGINEER: PENNONI
JASON SHERIDAN, PE
5755 RIO VISTA DRIVE
CLEARWATER, FL 33760

NORTH

0 10' 20'

EXISTING LEGEND

- EXISTING BUILDING
- EXISTING CURB
- EXISTING EDGE OF PAVEMENT
- EXISTING FENCE
- EXISTING SIDEWALK
- 101 EXISTING MINOR CONTOUR
- 100 EXISTING MAJOR CONTOUR
- EXISTING ASPHALT DRIVEWAY
- EXISTING GRAVEL PAVEMENT
- EXISTING DIRT DRIVE
- PROJECT BOUNDARY LIMITS
- 100.65 EXISTING SPOT ELEVATION
- UC EXISTING COMMUNICATION, UNDERGROUND
- UG EXISTING NATURAL GAS, UNDERGROUND
- UE EXISTING POWER, UNDERGROUND
- OE EXISTING OVERHEAD ELECTRIC
- FM EXISTING SANITARY SEWER, UNDERGROUND
- D EXISTING STORM SEWER, UNDERGROUND
- W EXISTING WATER, UNDERGROUND
- EXISTING SOLAR PANEL
- EXISTING OVERGROWTH
- EXISTING TRANSFORMER
- EXISTING MANHOLES
- EXISTING VALVES
- EXISTING JUNCTION BOX
- EXISTING SANITARY SEWER, CLEAN-OUT
- EXISTING STORM SEWER, ROOF DRAIN
- EXISTING STORM SEWER, INLET
- EXISTING WATER STRUCTURES
- EXISTING TREES
- EXISTING BOLLARD
- EXISTING SIGN
- EXISTING UTILITY POLE
- BORING LOCATION
- EXISTING LIGHT
- EXISTING SUPPORT POST

PROPOSED LEGEND

- PROPOSED EDGE OF PAVEMENT
- PROPOSED CURB LINE
- PROPOSED RETAINING WALL
- PROPOSED BUILDING OUTLINE
- 30 PROPOSED MAJOR CONTOUR
- 31 PROPOSED MINOR CONTOUR
- W PROPOSED WATER MAIN
- D PROPOSED STORM SEWER
- FM PROPOSED SANITARY SEWER
- UE PROPOSED UNDERGROUND ELECTRIC
- UG PROPOSED UNDERGROUND GAS
- PROPOSED SANITARY MANHOLE
- PROPOSED SIDEWALK
- 4% PROPOSED SLOPE
- 5.7 PROPOSED SPOT ELEVATION
- PROPOSED ASPHALT PAVEMENT

NO VEHICLE MOVEMENT BEYOND THIS POINT "DO NOT ENTER" SIGN
50FT SETBACK LINE
PROPOSED ADA RAMP
PROPOSED RETAINING WALL (TYP.)
NEW STAIRCASE
PROPOSED BUILDING 4,411 SF FFE: 91.5'
PROPOSED CONCRETE PAD
PROPOSED STEM WALL REFER TO STRUCTURAL PLANS FOR DETAILS
PROPOSED SIDEWALK (TYP.)
PROPOSED STAIR ACCESS (TYP.)
PROPOSED RETAINING WALL (TYP.)
TBM #10004 SET NAD STAMPED "PENNONI TRAV PNT" EL. 88.55
TBM #10000 SET /RBC STAMPED "PENNONI TRAV PNT" EL. 93.61

Revisions		Date

CONSULTANT	ARCHITECT/ENGINEER OF RECORD	STAMP
Pennoni PENNONI ASSOCIATES INC. 5755 Rio Vista Dr Clearwater, FL 33760 T 727.451.9561 Florida COA: 7819		MICHAEL JASON SHERIDAN LICENSE No 88424 STATE OF FLORIDA PROFESSIONAL ENGINEER

Office of Construction and Facilities Management

VA U.S. Department of Veterans Affairs

Drawing Title: SITE PLAN	Phase: BID DOCUMENTS	Project Title: CONSTRUCT EHRM INFRASTRUCT	Project Number RDCJP 23010 VA Project No. 573-21-106 RDC/JPA Project No. 0122085
Approved: STATION CHIEF - EDWIN BURNETT		Location: GAINSVILLE, FL	Building Number: BUILDING
		Issue Date: 04.20.2026 / Checked: JS / Drawn: AA	Drawing Number: CS-101

VA FORM 08 - 6231

0 10' 20'

GRADING NOTES:

1. THE PREPARED SUBGRADE SHALL BE PROOF ROLLED WITH A SMOOTH-DRUM VIBRATING ROLLER TO DELINEATE SOFT/UNSTABLE AREAS AND COMPACT SOILS DISTURBED DURING EXCAVATION OPERATIONS. AREAS WHICH EXHIBIT INSTABILITY SHALL BE UNDERCUT AND REPLACED WITH LOAD-BEARING FILL.
2. MINIMUM CONCRETE PAVEMENT GRADE SHALL BE 1.0% SLOPE UNLESS NOTED OTHERWISE.
3. BEDDING REQUIREMENTS SPECIFIED HEREIN ARE TO BE CONSIDERED AS MINIMUMS FOR RELATIVELY DRY, STABLE EARTH CONDITIONS. ADDITIONAL BEDDING SHALL BE REQUIRED FOR ROCK TRENCHES AND WET AREAS. CONTRACTOR SHALL HAVE THE RESPONSIBILITY TO PROVIDE SUCH ADDITIONAL BEDDING AS MAY BE REQUIRED TO PROPERLY CONSTRUCT THE WORK.
4. CONTRACTOR TO ENSURE THAT POSITIVE AND ADEQUATE DRAINAGE IS MAINTAINED AT ALL TIMES WITHIN THE PROJECT LIMITS. THIS MAY INCLUDE, BUT NOT BE LIMITED TO, REPLACEMENT OR RECONSTRUCTION OF EXISTING DRAINAGE STRUCTURES THAT HAVE BEEN DAMAGED OR REMOVED OR REGRADING AS REQUIRED BY THE ENGINEER. NO SEPARATE PAYMENT WILL BE MADE FOR ANY COSTS INCURRED TO COMPLY WITH THIS REQUIREMENT.
5. THE CONTRACTOR SHALL PROVIDE ANY AND ALL EXCAVATION AND MATERIAL SAMPLES NECESSARY TO CONDUCT REQUIRED SOIL TESTS. ALL ARRANGEMENTS AND SCHEDULING FOR THE TESTING SHALL BE THE CONTRACTOR'S RESPONSIBILITY.
6. CONTRACTOR SHALL FURNISH AND MAINTAIN ALL NECESSARY BARRICADES AROUND THE WORK AREA AND SHALL PROVIDE PROTECTION AGAINST WATER DAMAGE AND SOIL EROSION.
7. DRAINAGE SYSTEM TO BE FLUSHED AFTER CONSTRUCTION.

ABBREVIATIONS:

TW: TOP OF WALL
BW: BOTTOM OF WALL
EX: EXISTING GRADE

EXISTING LEGEND

- EXISTING BUILDING
- EXISTING CURB
- EXISTING EDGE OF PAVEMENT
- EXISTING FENCE
- EXISTING SIDEWALK
- EXISTING MINOR CONTOUR
- EXISTING MAJOR CONTOUR
- EXISTING ASPHALT DRIVEWAY
- EXISTING GRAVEL PAVEMENT
- EXISTING DIRT DRIVE
- PROJECT BOUNDARY LIMITS
- EXISTING SPOT ELEVATION
- EXISTING COMMUNICATION, UNDERGROUND
- EXISTING NATURAL GAS, UNDERGROUND
- EXISTING POWER, UNDERGROUND
- EXISTING OVERHEAD ELECTRIC
- EXISTING SANITARY SEWER, UNDERGROUND
- EXISTING STORM SEWER, UNDERGROUND
- EXISTING WATER, UNDERGROUND
- EXISTING SOLAR PANEL
- EXISTING OVERGROWTH
- EXISTING TRANSFORMER
- EXISTING MANHOLES
- EXISTING VALVES
- EXISTING JUNCTION BOX
- EXISTING SANITARY SEWER, CLEAN-OUT
- EXISTING STORM SEWER, ROOF DRAIN
- EXISTING STORM SEWER, INLET
- EXISTING WATER STRUCTURES
- EXISTING TREES
- EXISTING BOLLARD
- EXISTING SIGN
- EXISTING UTILITY POLE
- BORING LOCATION
- EXISTING LIGHT
- EXISTING SUPPORT POST

PROPOSED LEGEND

- PROPOSED EDGE OF PAVEMENT
- PROPOSED CURB LINE
- PROPOSED RETAINING WALL
- PROPOSED BUILDING OUTLINE
- PROPOSED MAJOR CONTOUR
- PROPOSED MINOR CONTOUR
- PROPOSED WATER MAIN
- PROPOSED STORM SEWER
- PROPOSED SANITARY SEWER
- PROPOSED UNDERGROUND ELECTRIC
- PROPOSED UNDERGROUND GAS
- PROPOSED SANITARY MANHOLE
- PROPOSED SIDEWALK
- PROPOSED SLOPE
- PROPOSED SPOT ELEVATION
- PROPOSED ASPHALT PAVEMENT

SITE INFORMATION:

ADDRESS: 10000 BAY PINES BLVD
BAY PINES, FL 33744

CONTRACTING OFFICER: U.S. DEPT. OF VETERANS AFFAIRS
10000 BAY PINES BLVD
BAY PINES, PINELLAS COUNTY, FL 33744

ENGINEER: PENNONI
JASON SHERIDAN, PE
5755 RIO VISTA DRIVE
CLEARWATER, FL 33760

Revisions	Date

CONSULTANT

Pennoni

PENNONI ASSOCIATES INC.
5755 Rio Vista Dr
Clearwater, FL 33760
T 727.451.9561
Florida COA: 7819

ARCHITECT/ENGINEER OF RECORD

STAMP

MICHAEL JASON SHERIDAN LICENSE No 88424 STATE OF FLORIDA PROFESSIONAL ENGINEER

Office of Construction and Facilities Management

VA U.S. Department of Veterans Affairs

Drawing Title: GRADING AND DRAINAGE PLAN	Phase: BID DOCUMENTS	Project Title: CONSTRUCT EHRM INFRASTRUCT	Project Number RDCJP 23010 VA Project No. 573-21-106 RDC/JPA Project No. 0122085
Approved: STATION CHIEF - EDWIN BURNETT	FULLY SPRINKLERED	Location: GAINSVILLE, FL	Building Number: BUILDING
		Issue Date: 04.20.2026 / Checked: JS / Drawn: AA	Drawing Number: CG-151

VA FORM 08 - 6231

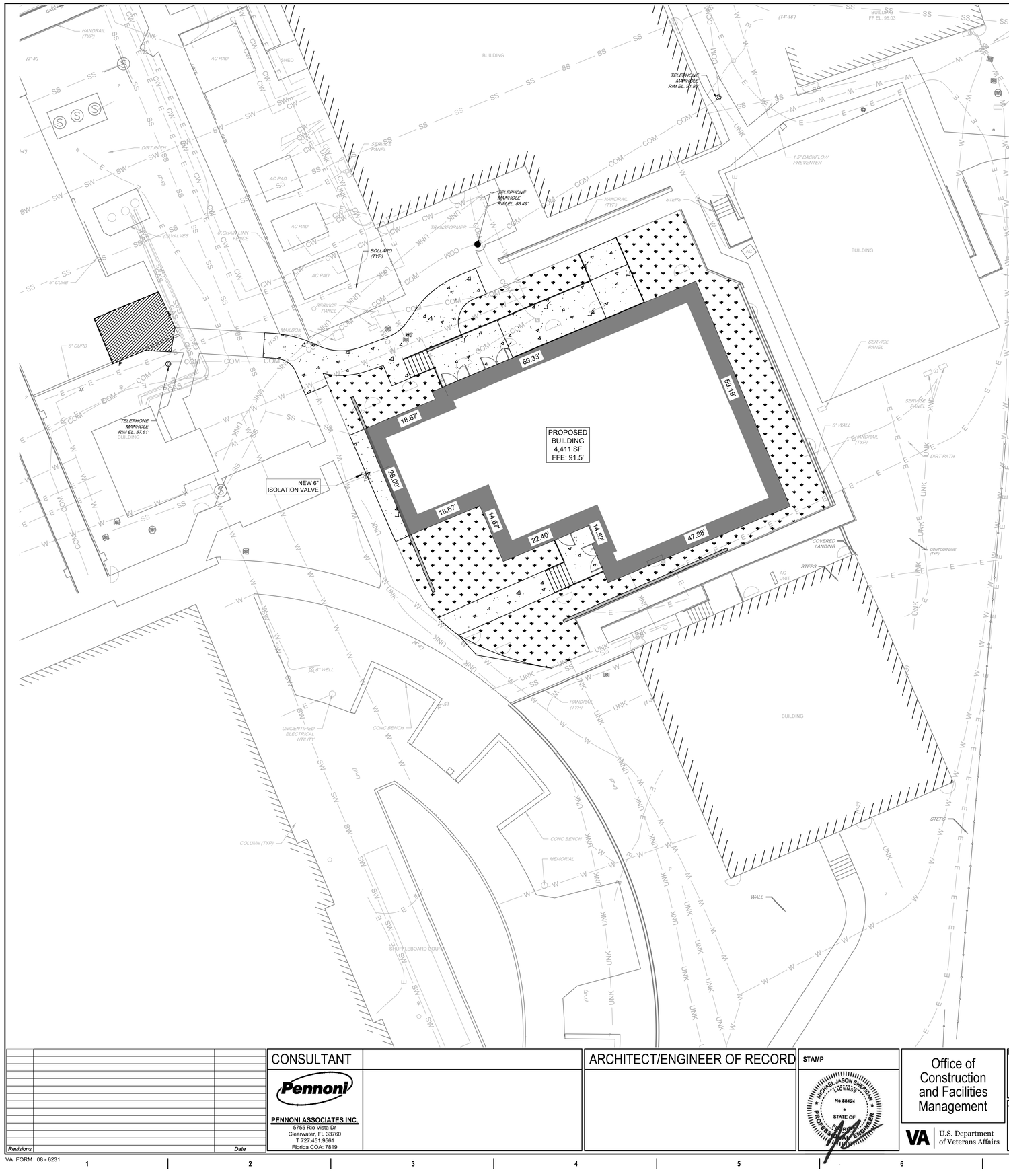

SITE INFORMATION:

ADDRESS: 10000 BAY PINES BLVD
BAY PINES, FL 33744

CONTRACTING OFFICER: U.S. DEPT. OF VETERANS AFFAIRS
10000 BAY PINES BLVD
BAY PINES, PINELLAS COUNTY, FL 33744

ENGINEER: PENNONI
JASON SHERIDAN, PE
5755 RIO VISTA DRIVE
CLEARWATER, FL 33760

NORTH

0 10' 20'

UTILITY NOTES:

1. UTILITY SERVICES WILL BE TAKEN FROM EXISTING CONNECTIONS.
2. ALL PIPE LENGTHS AND DISTANCES BETWEEN STRUCTURES ARE MEASURED FROM CENTER OF STRUCTURE TO CENTER OF STRUCTURE ALONG A HORIZONTAL PLANE.
3. ALL STORM DRAINAGE PIPE SHALL BE LAID ON SMOOTH CONTINUOUS GRADES WITH NO VISIBLE BENDS AT JOINTS.
4. BEDDING REQUIREMENTS SPECIFIED HEREIN ARE TO BE CONSIDERED AS MINIMUMS FOR RELATIVELY DRY, STABLE EARTH CONDITIONS. ADDITIONAL BEDDING SHALL BE REQUIRED FOR ROCK TRENCHES AND WET AREAS. CONTRACTOR SHALL HAVE THE RESPONSIBILITY TO PROVIDE SUCH ADDITIONAL BEDDING AS MAY BE REQUIRED TO PROPERLY CONSTRUCT THE WORK.
5. COMPACTION OF THE BACKFILL OF ALL TRENCHES SHALL BE COMPACTED TO THE DENSITY OF 95% OF THEORETICAL MAXIMUM DRY DENSITY (ASTM D698). BACKFILL MATERIAL SHALL BE FREE FROM ROOTS, STUMPS, OR OTHER FOREIGN DEBRIS AND SHALL BE PLACED IN LIFTS NOT TO EXCEED 6 INCHES IN COMPACTED FILL THICKNESS. A REPORT FROM A GEOTECHNICAL ENGINEER MAY BE REQUIRED BY THE PUBLIC WORKS INSPECTOR. CORRECTION OF ANY TRENCH SETTLEMENT WITHIN A YEAR FROM THE DATE OF APPROVAL WILL BE THE RESPONSIBILITY OF THE CONTRACTOR.
6. THE CONTRACTOR WILL ENSURE THAT POSITIVE AND ADEQUATE DRAINAGE IS MAINTAINED AT ALL TIMES WITHIN THE PROJECT LIMITS. THIS MAY INCLUDE, BUT NOT BE LIMITED TO, REPLACEMENT OR RECONSTRUCTION OF EXISTING DRAINAGE STRUCTURES THAT HAVE BEEN DAMAGED OR REMOVED OR REGRADING AS REQUIRED BY THE ENGINEER, EXCEPT FOR THOSE DRAINAGE ITEMS SHOWN AT SPECIFIC LOCATIONS AND HAVING SPECIFIC PAY ITEMS IN THE DETAILED ESTIMATE. NO SEPARATE PAYMENT WILL BE MADE FOR ANY COSTS INCURRED TO COMPLY WITH THIS REQUIREMENT.
7. CONTRACTOR IS RESPONSIBLE FOR ALL UTILITY CONNECTION FEES.
8. IT IS THE RESPONSIBILITY OF THE CONTRACTOR TO DETERMINE THE LOCATION OF ALL EXISTING UNDERGROUND UTILITIES AND TO TAKE WHATEVER STEPS NECESSARY TO PROVIDE FOR THEIR PROTECTION. THE ENGINEER ASSUMES NO RESPONSIBILITY FOR THE LOCATIONS OF UTILITIES SHOWN OR NOT SHOWN. THE CONTRACTOR SHALL CONTACT THE UTILITY COMPANIES FOR EXACT LOCATION OF THEIR UTILITIES PRIOR TO STARTING CONSTRUCTION. IT SHALL BE THE SOLE RESPONSIBILITY OF THE CONTRACTOR TO REPAIR AND REPLACE ANY AND ALL DAMAGE MADE TO UTILITIES BY THE CONTRACTOR.
9. THE CONTRACTOR SHALL COORDINATE LOCATION AND INSTALLATION OF ALL UNDERGROUND UTILITIES AND APPURTENANCES TO MINIMIZE DISTURBANCE TO CURBING, PAVING, AND COMPACTED SUBGRADE.
10. CONTRACTOR SHALL EXCAVATE ONLY AS MUCH TRENCH WHICH PIPE CAN BE INSTALLED AND TRENCH BACKFILLED BY THE END OF EACH WORK DAY.
11. ALL UNDERGROUND UTILITY TRENCHES SHALL BE BACKFILLED WITH SAFE CLEAN FILL.
12. FLOW PRESSURE TO ALL FIRE HYDRANTS SHALL HAVE MINIMUM 600 GALLONS PER MINUTE AT A MINIMUM RESIDUAL PRESSURE OF 20 POUNDS PER SQUARE INCH.
13. ALL TRENCHES SHALL BE PROPERLY SECURED AND BRACED.
14. ALL EXISTING CASTING AND INLET TOPS OR GRATES MUST BE ADJUSTED TO THE PROPOSED GRADE, UNLESS OTHERWISE INDICATED.
15. ALL PROPOSED UTILITIES, INCLUDING ELECTRIC SERVICE, SHALL BE PLACED UNDERGROUND.
16. ALL CONNECTIONS TO EXISTING UTILITIES AND TESTING SHALL BE PERFORMED IN THE PRESENCE OF UTILITY OWNERS AND PENNONI. CONNECTION LOCATIONS MUST BE APPROVED IN FIELD AFTER PIPE IS EXPOSED. CONTRACTOR SHALL PROVIDE WRITTEN REQUEST TO PENNONI WITH PROPOSED TIME AND DATE OF CONNECTION AT LEAST 5 WORKING DAYS IN ADVANCE OF PLANNED CONNECTION. COORDINATE WITH LOCAL JURISDICTION ON THE CAPPING AND DISCONNECTING REQUIREMENTS FOR
17. ANY EXISTING SERVICES ALL BUILDINGS CONTAINING KITCHENS / RESTAURANTS REQUIRE GREASE TRAPS SIZED IN ACCORDANCE WITH THE EPA REGULATIONS WITHIN SANITARY LATERALS.
18. CONTRACTOR SHALL CALL FOR A 000-SITE DEVELOPMENT MEETING WITH THE ENGINEERING DEPARTMENT UTILITY CONSTRUCTION INSPECTORS PRIOR TO THE START OF ANY CONSTRUCTION ACTIVITIES ON SITE.
19. ON SITE SANITARY SEWER IS PRIVATELY OWNED.
20. A SEPARATE PERMIT IS REQUIRED FOR THE SEWER CUT AND CAP. THE CUT AND CAP PERMIT MUST BE OBTAINED BY A LICENSED PLUMBER, ISSUED, INSPECTED, AND COMPLETED PRIOR TO THE ISSUANCE OF THE ASSOCIATED DEMOLITION PERMIT.
21. DOGHOUSE MANHOLES ARE NOT PERMITTED FOR SANITARY SEWER MANHOLES.
22. CONTRACTOR SHALL VERIFY MINIMUM SEPARATION BETWEEN THE OUTSIDE DIAMETER OF WATER, RECLAIMED WATER, STORM SEWER AND SANITARY SEWER SYSTEMS (18" MINIMUM VERTICAL AND 10' MINIMUM HORIZONTAL SEPARATIONS). UPON COMPLETION OF CONSTRUCTION, THE CONTRACTOR SHALL PROVIDE WRITTEN VERIFICATION AND PHOTOS DOCUMENTING THE MINIMUM SEPARATION AS CONSTRUCTED. CONSTRUCTION SHALL COMPLY WITH 62-555, FAC
23. ALL WATER, WASTEWATER, AND RECLAIMED WATER LINES CROSSING OTHER UTILITY LINES HAVE AT LEAST 18" VERTICAL CLEARANCE.
24. CONSTRUCTION SHALL MEET THE REQUIREMENTS OF NFPA 1 2013 EDITION CHAPTER 16 FIRE SPRINKLER PROTECTION. SAFEGUARDING CONSTRUCTION, ALTERATION, AND DEMOLITION OPERATIONS TO INCLUDE BUT NOT BE LIMITED TO COMPLYING WITH NFPA 241.
25. FIRE WATER SYSTEM PIPING
    - 25.1. FIRE DEPARTMENT ACCESS AND WATER SUPPLY SHALL BE ESTABLISHED BEFORE ANY VERTICAL CONSTRUCTION BEINGS. THE CONNECTION SHALL MEET THE REQUIREMENTS OF NFPA 1 2015 EDITION, CHAPTER 18.
    - 25.2. WHERE UNDERGROUND WATER MAINS AND HYDRANTS ARE TO BE INSTALLED, THEY SHALL BE INSTALLED, COMPLETED AND IN SERVICE PRIOR TO CONSTRUCTION AS PER NFPA-241 ALL UNDERGROUND FIRE LINES MUST BE INSTALLED PER NFPA-24 2013 EDITION BY A LICENSED CLASS 1, 2, OR 5 FIRE PROTECTION SYSTEM CONTRACTOR WITH SEPARATE PERMIT AND PLANS.
    - 25.3. POLYVINYL CHLORIDE (PVC):
    - 25.3.1. FOUR (4) INCHES DIAMETER AND GREATER - CLASS 150 PIPE MEETING AWWA C-900 (DR 14). FIRE LINES, BACKFLOW PREVENTION AND APPURTENANCES SHALL COMPLY WITH NFPA 24 WITH DR 14 PIPE (CLASS 200) AND TESTED AT 200 PSI. FOR 24 HOURS IN ACCORDANCE WITH NFPA 24.
26. WATER MAIN AND FORCE MAIN SYSTEM TESTING
    - 26.1. THE CONTRACTOR SHALL PUMP THE LINES TO A PRESSURE EQUAL TO OR GREATER THAN 150 PSI OR 200 PSI (DR 14). SHOULD PRESSURE FALL BELOW 150 PSI DURING THE TEST PERIOD, IT SHALL BE VOIDED AND RESTARTED. TEST PERIOD SHALL BE TWO (2) HOURS. ALLOWABLE LEAKAGE SHALL BE COMPUTED IN ACCORDANCE WITH AWWA MANUAL M23, LATEST REVISION.
27. POTABLE WATER AND FORCE MAIN FITTINGS
    - 27.1. THRUST RESTRAINT:
    - 27.2. ALL POTABLE WATER AND SEWER FORCE MAIN VALVES AND FITTINGS SHALL BE RESTRAINED AGAINST THRUST FROM 150 PSI TEST PRESSURE BY FLANGED OR "MEGALUG" TYPE CONNECTORS. ALL PIPE JOINTS LYING WITHIN THE LISTED MINIMUM DISTANCE OF ANY FITTING OR VALVE SHALL ALSO BE RESTRAINED. WHEN CASINGS FALL WITHIN THE MINIMUM DISTANCE FROM A FITTING, RESTRAIN ALL JOINTS INSIDE THE CASING IN ADDITION TO THE REQUIRED MINIMUM LENGTH OF BURIED PIPE. PLEASE REFERENCE THE RESTRAINT TABLE ON THE UTILITY PLAN WHICH DESCRIBES THE MINIMUM LENGTH OF PIPE THAT SHALL BE CONTINUOUSLY RESTRAINED ON BOTH SIDES OF DIFFERENT TYPES AND SIZES OF POTABLE WATER AND FORCE MAIN FITTINGS. RULE 62-555.320(21) (B)
28. NO EXISTING METERS ARE TO BE REMOVE FROM THE SITE.
29. ALL WATER LINES LOCATED AFTER BACKFLOW DEVICES AND METERS ARE CONSIDERED PRIVATE.
30. A PRE-CONSTRUCTION MEETING SHALL BE SET UP TO DISCUSS THESE AND OTHER ISSUES RESULTING IN THIS CONSTRUCTION PROJECT. THIS SHALL BE COORDINATED THROUGH THE CONSTRUCTION SITE PROJECT MANAGER.
31. PRIOR TO ISSUANCE OF CO:
    - 31.1. SUBMIT A MAINTENANCE AGREEMENT OF THE STORMWATER MAINTENANCE SYSTEM SIGNED AND ACCEPTED BY THE PROJECT'S OWNER.
    - 31.2. SUBMIT FIVE (5) 24"X36" SIGNED AND SEALED SETS OF RECORD DRAWINGS AND ONE (1) ENGINEER OF RECORD CERTIFICATION LETTER CERTIFYING THAT THE PROJECT INFRASTRUCTURE WAS CONSTRUCTED IN SUBSTANTIAL CONFORMANCE WITH THE APPROVED DESIGN AND SPECIFICATIONS AND WILL MEET ALL GOVERNING AGENCIES APPLICABLE RULES AND REGULATIONS. SHOULD THE RECORD DRAWINGS SHOW SUBSTANTIAL DEVIATIONS FROM DESIGN CALCULATIONS AND PERMITTED PLANS, A NARRATIVE IDENTIFYING THE CHANGES SHALL BE INCLUDED AS PART OF THE CERTIFICATION LETTER.
    - 31.3. PASS FINAL STORMWATER INSPECTION.
31. THE CONTRACTOR SHALL BE APPROVED FOR UTILITY SHUTDOWN REQUEST PRIOR TO START OF UTILITY WORK. THE VA SHALL BE PRESENT AT POWER MAIN TIE IN.
32. UTILITY METERS SHALL BE IN ACCORDANCE WITH THE VA "ADVANCED UTILITY METERING SYSTEM" SPECIFICATION (SECTION 25 10 10)

EXISTING LEGEND

- EXISTING BUILDING
- EXISTING CURB
- EXISTING EDGE OF PAVEMENT
- EXISTING FENCE
- EXISTING SIDEWALK
- EXISTING MINOR CONTOUR (101)
- EXISTING MAJOR CONTOUR (100)
- EXISTING ASPHALT DRIVEWAY
- EXISTING GRAVEL PAVEMENT
- EXISTING DIRT DRIVE
- PROJECT BOUNDARY LIMITS
- EXISTING SPOT ELEVATION (100.55)
- EXISTING COMMUNICATION, UNDERGROUND (UC)
- EXISTING NATURAL GAS, UNDERGROUND (UG)
- EXISTING POWER, UNDERGROUND (UE)
- EXISTING OVERHEAD ELECTRIC (OE)
- EXISTING SANITARY SEWER, UNDERGROUND (FM)
- EXISTING STORM SEWER, UNDERGROUND (D)
- EXISTING WATER, UNDERGROUND (W)
- EXISTING SOLAR PANEL
- EXISTING OVERGROWTH
- EXISTING TRANSFORMER
- EXISTING MANHOLES (W, S, E, D)
- EXISTING VALVES
- EXISTING JUNCTION BOX
- EXISTING SANITARY SEWER, CLEAN-OUT
- EXISTING STORM SEWER, ROOF DRAIN
- EXISTING STORM SEWER, INLET
- EXISTING WATER STRUCTURES
- EXISTING TREES
- EXISTING BOLLARD
- EXISTING SIGN
- EXISTING UTILITY POLE
- BORING LOCATION
- EXISTING LIGHT
- EXISTING SUPPORT POST

PROPOSED LEGEND

- PROPOSED EDGE OF PAVEMENT
- PROPOSED CURB LINE
- PROPOSED BUILDING OUTLINE
- PROPOSED MAJOR CONTOUR (30)
- PROPOSED MINOR CONTOUR (31)
- PROPOSED WATER MAIN (W)
- PROPOSED STORM SEWER (D)
- PROPOSED SANITARY SEWER (FM)
- PROPOSED UNDERGROUND ELECTRIC (UE)
- PROPOSED UNDERGROUND GAS (UG)
- PROPOSED SANITARY MANHOLE (S)
- PROPOSED SIDEWALK
- PROPOSED SLOPE (4%)
- PROPOSED SPOT ELEVATION (57)
- PROPOSED ASPHALT PAVEMENT

Revisions	Date

CONSULTANT

Pennoni

PENNONI ASSOCIATES INC.
5755 Rio Vista Dr
Clearwater, FL 33760
T 727.451.9561
Florida COA: 7819

ARCHITECT/ENGINEER OF RECORD

STAMP

MICHAEL JASON SHERIDAN — LICENSE — No 88424 — STATE OF FLORIDA — PROFESSIONAL ENGINEER

Office of Construction and Facilities Management

VA U.S. Department of Veterans Affairs

Drawing Title: UTILITY PLAN	Phase: BID DOCUMENTS
Approved: STATION CHIEF - EDWIN BURNETT	FULLY SPRINKLERED

Project Title: CONSTRUCT EHRM INFRASTRUCT		Project Number RDCJP 23010 VA Project No. 573-21-106 RDCJPA Project No. 0122085
		Building Number: BUILDING
Location: GAINSVILLE, FL		Drawing Number: CS-171
Issue Date: 04.20.2026	Checked: JS	Drawn: AA

VA FORM 08 - 6231

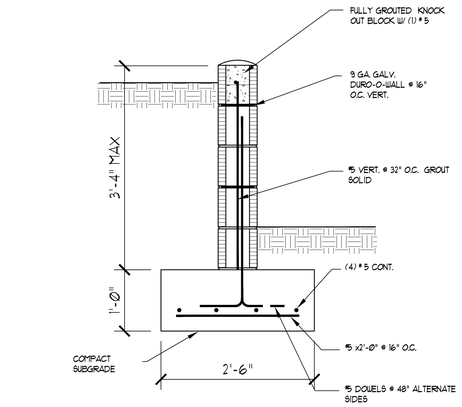

DETAIL- RETAINING WALL

N.T.S.

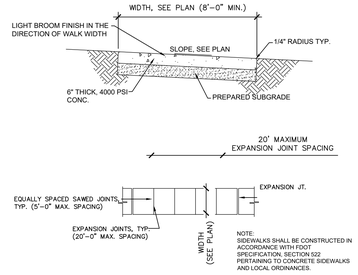

NOTE:
SIDEWALKS SHALL BE CONSTRUCTED IN ACCORDANCE WITH FDOT SPECIFICATION, SECTION 522 PERTAINING TO CONCRETE SIDEWALKS AND LOCAL ORDINANCES.

DETAIL- CONCRETE SIDEWALK

N.T.S.

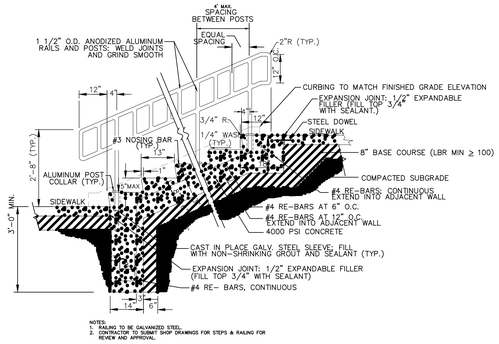

NOTES:
1. RAILING TO BE GALVANIZED STEEL.
2. CONTRACTOR TO SUBMIT SHOP DRAWINGS FOR STEPS & RAILING FOR REVIEW AND APPROVAL.

DETAIL- CONCRETE STEPS W/ RAIL

N.T.S.

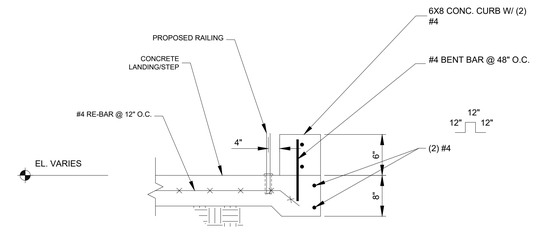

DETAIL- STAIR SIDE CURBING

N.T.S.

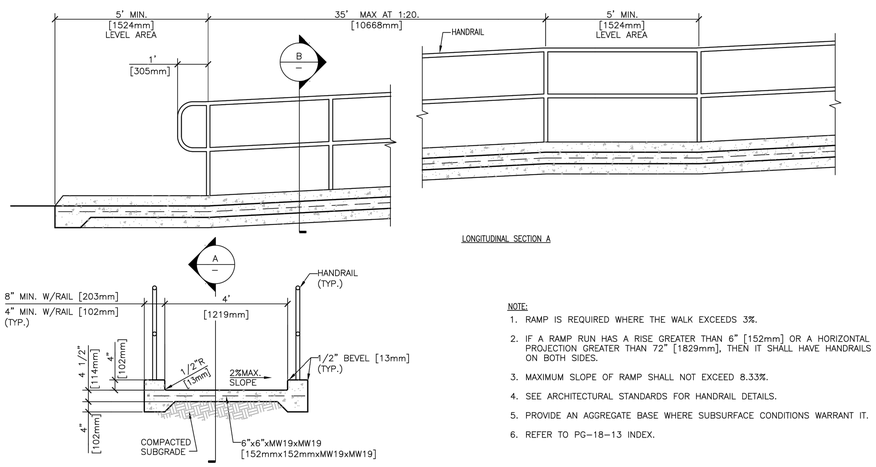

LONGITUDINAL SECTION A

TRAVERSE SECTION B

NOTE:
1. RAMP IS REQUIRED WHERE THE WALK EXCEEDS 3%.
2. IF A RAMP RUN HAS A RISE GREATER THAN 6" [152mm] OR A HORIZONTAL PROJECTION GREATER THAN 72" [1829mm], THEN IT SHALL HAVE HANDRAILS ON BOTH SIDES.
3. MAXIMUM SLOPE OF RAMP SHALL NOT EXCEED 8.33%.
4. SEE ARCHITECTURAL STANDARDS FOR HANDRAIL DETAILS.
5. PROVIDE AN AGGREGATE BASE WHERE SUBSURFACE CONDITIONS WARRANT IT.
6. REFER TO PG-18-13 INDEX.

DETAIL- ADA RAMP

N.T.S.

Revisions	Date

CONSULTANT

PENNONI ASSOCIATES INC.
5755 Rio Vista Dr
Clearwater, FL 33760
T 727.451.9561
Florida COA: 7819

ARCHITECT/ENGINEER OF RECORD

STAMP

MICHAEL JASON SHELDON LICENSE No 88424 STATE OF FLORIDA PROFESSIONAL ENGINEER

Office of Construction and Facilities Management

VA U.S. Department of Veterans Affairs

Drawing Title	SITE DETAILS
Phase	BID DOCUMENTS
Approved:	STATION CHIEF - EDWIN BURNETT
	FULLY SPRINKLERED
Project Title	CONSTRUCT EHRM INFRASTRUCT
Location	GAINSVILLE, FL
Issue Date	04.20.2026
Checked	JS
Drawn	AA
Project Number RDCJP 23010	VA Project No. 573-21-106 RDC/JPA Project No. 0122085
Building Number	BUILDING
Drawing Number	CK-601

VA FORM 08 - 6231

GENERAL DEMOLITION NOTES

A. Remove all existing partitions shown with dashed line. Repair wall and floor finishes to match adjacent surfaces at areas of removal or scheduled new surfaces as required.
B. Remove all existing borrowed lights, doors and hollow metal frames where indicated with dashed line. Unused hardware shall be turned over to Owner. Box hardware before giving to Owner.
C. Remove wall-hung toilet room accessories and medical equipment as required and turn over to Owner.
D. See Plumbing, HVAC and Electrical Drawings for removal work associated with those trades.
E. Computer and communication cables and/or other wiring, piping, tubing, etc. serving other areas and functions located above ceiling or in walls of area to be remodeled shall be maintained during demolition/construction process. Coordinate any required changes to these systems with the C.O.R.
F. Repair existing walls to match adjacent undisturbed wall where cabinets, countertops, etc. are shown to be removed.
G. Prepare walls and floor slabs as required to receive new fininsh materials where existing finish is indicated to be removed.
H. Remove existing corner guards in areas to be remodeled.

PLAN NOTES

2.10	Existing structure to be demolished.
2.51	Remove existing wooden deck, ramp, railing, and guardrail.
2.52	Remove existing awning roof and columns.
2.53	Remove existing downspout.
2.54	Demo existing sidewalk as required. See civil drawings.
2.55	Remove existing wooden stair, railing, and guardrail.

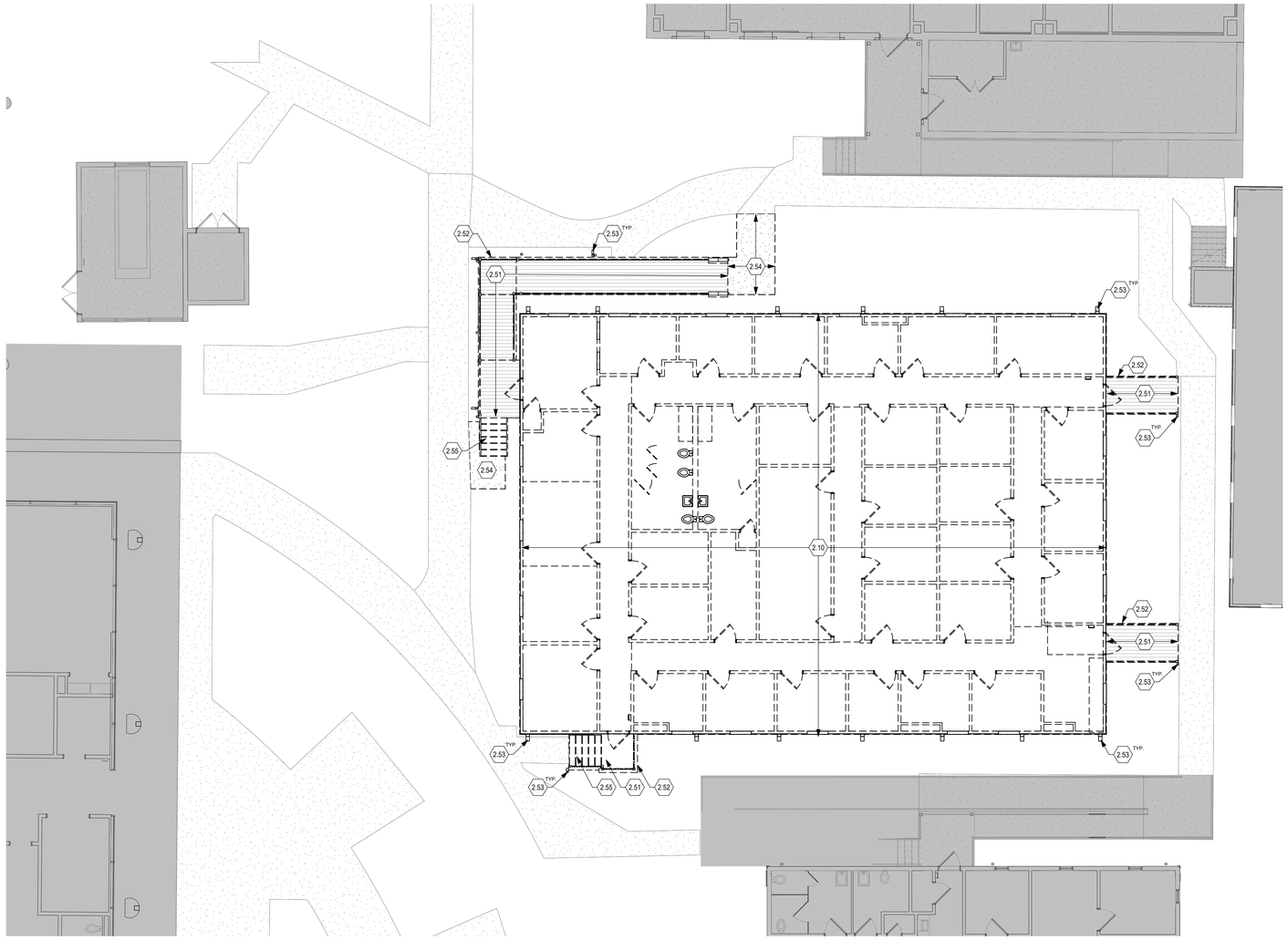

N 1 DEMO PLAN
Scale: 1/8" = 1'-0"

Revisions		Date

CONSULTANT

ARCHITECT/ENGINEER OF RECORD
RDC◆JPA
ARCHITECTURE
524 Fernwood Drive, Altamonte Springs, Florida 32701 | www.rdcjpa.com | 800.362.1523

STAMP
STATE OF FLORIDA JASON H. REED AR101907 REGISTERED ARCHITECT

Office of Construction and Facilities Management
VA U.S. Department of Veterans Affairs

Drawing Title: DEMOLITION PLAN
Phase: BID DOCUMENTS
Project Title: GAINESVILLE VAMC DATA CENTER & EHRM INFRASTRUCTURE UPGRADES DESIGN
Project Number: VA Project No. 573-21-106; RDCJPA Project No. 23072.00
Building Number: 43
Approved: STATION CHIEF - EDWIN BURNETT
Location: GAINESVILLE FL
Drawing Number: AD101
Issue Date: 04.20.2026
Checked: JC
Drawn: AC

4/20/2026 5:01:14 PM

VA FORM 08 - 6231

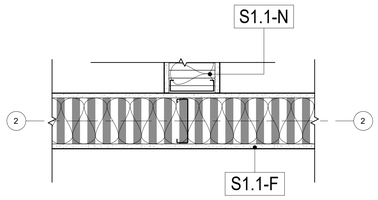

2 TYP. RATED WALL DETAIL

Scale: 1 1/2" = 1'-0"

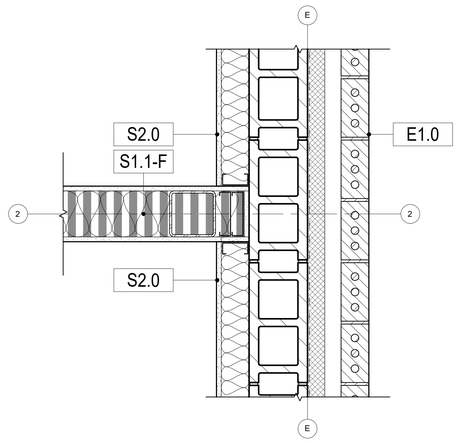

1 TYP. RATED WALL DETAIL

Scale: 1 1/2" = 1'-0"

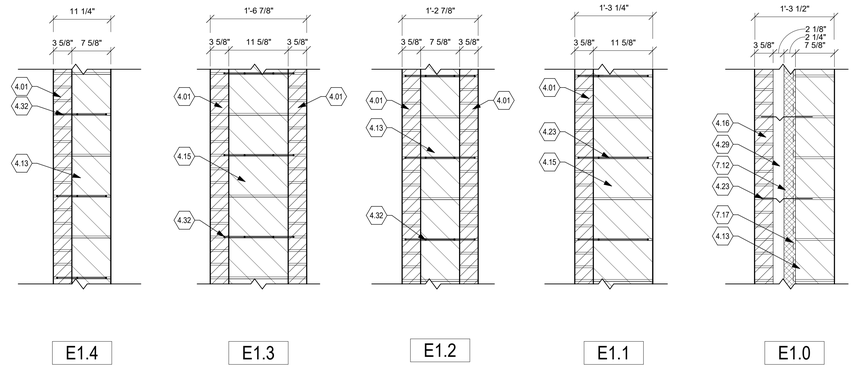

E1.4 E1.3 E1.2 E1.1 E1.0

WALL TYPES - EXTERIOR MASONRY

Scale: 1" = 1'-0"

DETAIL NOTES

4.01	Brick veneer.
4.13	8" concrete masonry unit. See Structural Drawings.
4.15	12" concrete masonry unit. See Structural Drawings.
4.16	Brick veneer. See elevations for color selection.
4.23	Masonry veneer anchor.
4.29	Airspace.
4.32	Wire ladder type joint reinforcement.
5.03	Metal deck. See Structural Drawings.
5.08	8" cold formed metal framing @ 16" o.C. See structural drawings.
5.17	Steel angled cmu wall brace. Paint to match door frame.
7.12	Rigid thermal wall insulation, R-12 min.
7.13	Batt thermal wall insulation. R-11 min.
7.16	Vapor retarder. Seal all joints and penetratons.
7.17	Air and moisture barrier. Lap air and moisture barrier over thru-wall flashing.
7.72	Fire stopping.
7.82	Continuous acoustic sealant @ non-rated walls / fire-rated sealant @ rated walls each side.
9.02	3 5/8" non-structural metal framing @ 16" o.c.
9.03	6" non-structural metal framing @ 16" o.c.
9.21	5/8" Type X gypsum board.
9.24	Slotted deflection track.
9.34	Plastic sheeting sealed to prevent passage of air.
9.80	Acoustic insulation

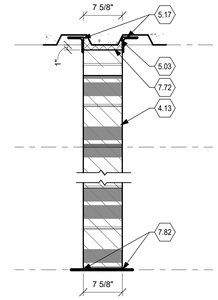

M1.1-F 2-HR RATED FIRE BARRIER U.L. #U904

WALL TYPES - INTERIOR MASONRY

Scale: 1" = 1'-0"

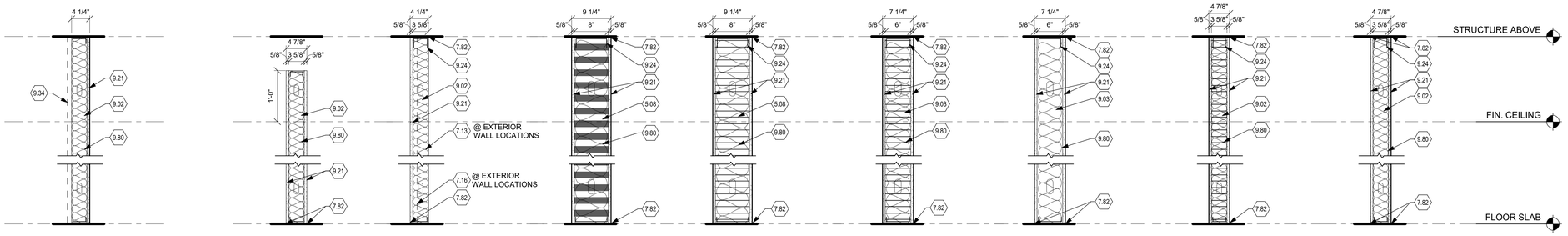

T1.0 S3.0 S2.0 S1.2-F 1-HR RATED FIRE BARRIER U.L. #U465 S1.2-N NON-RATED SMOKE PARTITION S1.1-N NON-RATED SMOKE PARTITION S1.1 S1.0-N NON-RATED SMOKE PARTITION S1.0

TEMP. WALL TYPE

Scale: 1" = 1'-0"

WALL TYPES - STEEL STUD

Scale: 1" = 1'-0"

Revisions	Date

CONSULTANT

ARCHITECT/ENGINEER OF RECORD

RDC JPA ARCHITECTURE

524 Fernwood Drive, Altamonte Springs, Florida 32701 | www.rdcjpa.com | 800.362.1523

STAMP

STATE OF FLORIDA · JASON H. ROSS · AR101907 · REGISTERED ARCHITECT

Office of Construction and Facilities Management

VA U.S. Department of Veterans Affairs

Drawing Title WALL TYPES	**Phase** BID DOCUMENTS	**Project Title** GAINESVILLE VAMC DATA CENTER & EHRM INFRASTRUCTURE UPGRADES DESIGN	**Project Number** VA Project No. 573-21-106 RDC/JPA Project No. 23072.00
Approved: STATION CHIEF - EDWIN BURNETT	FULLY SPRINKLERED	**Location** GAINESVILLE FL	**Building Number** 43
		Issue Date 04.20.2026 / **Checked** JC / **Drawn** AC	**Drawing Number** A001

4/20/2026 5:01:36 PM

VA FORM 08 - 6231

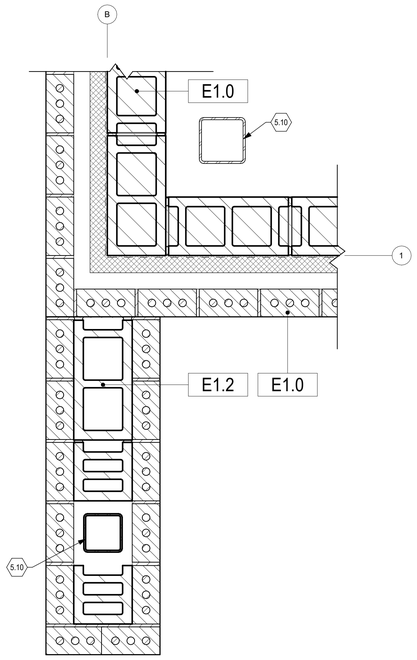

1c DETAIL
Scale: 1 1/2" = 1'-0"

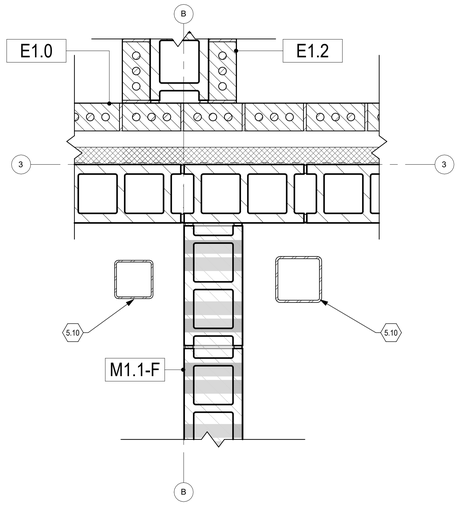

1b DETAIL
Scale: 1 1/2" = 1'-0"

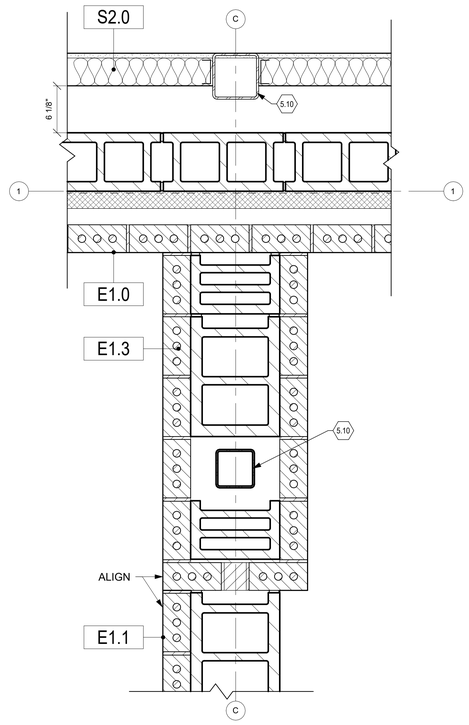

1a DETAIL
Scale: 1 1/2" = 1'-0"

GENERAL NOTES

A. All dimensions are taken to face of gypsum wallboard or unit masonry.
B. Edge of all door jambs at hinge side not otherwise indicated are to be 6" from the face of intersecting walls. Edge of all door jambs at strike side not otherwise located are to be 18" minimum from the face of intersecting walls.
C. All wood blocking to be fire retardent treated.
D. First floor level 100'-0" equals 728'-0".
E. All partitions shall be type 'S1.0' unless noted otherwise.

⎔ PLAN NOTES

5.10 Structural steel column. See Structural Drawings.
26.02 Generator on housekeeping pad. See electrical drawings.
26.03 Generator fuel tank. See Electrical Drawings.
26.04 Housekeeping pad.

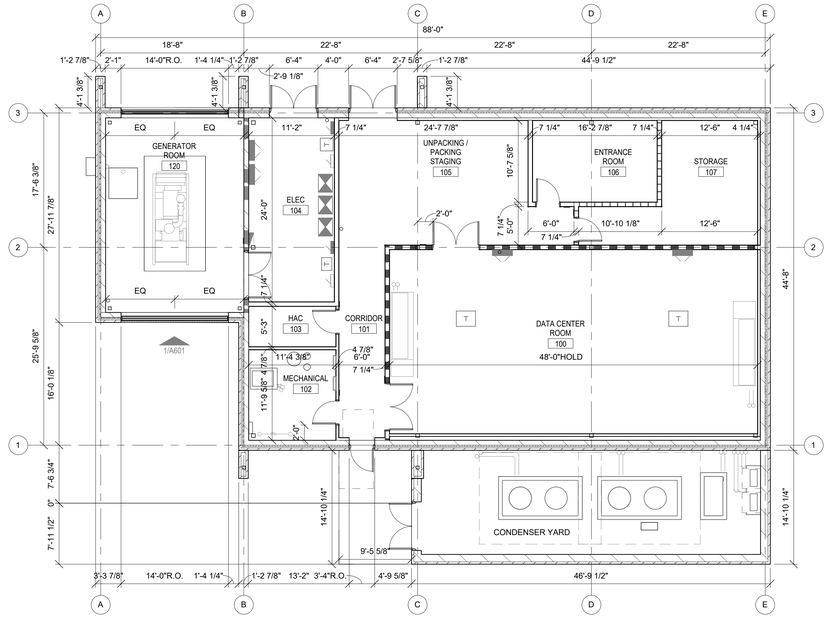

2 DIMENSION PLAN
Scale: 1/8" = 1'-0"

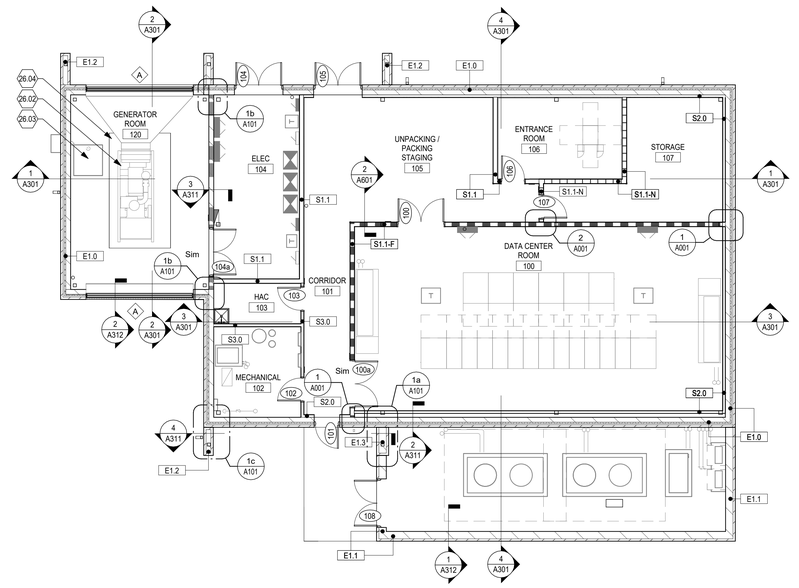

N 1 NOTE PLAN
Scale: 1/8" = 1'-0"

Revisions	Date

CONSULTANT

ARCHITECT/ENGINEER OF RECORD
RDC◆JPA
ARCHITECTURE
524 Fernwood Drive, Altamonte Springs, Florida 32701 | www.rdcjpa.com | 800.362.1523

STAMP
STATE OF FLORIDA · JASON H. ROSS · AR101907 · REGISTERED ARCHITECT

Office of Construction and Facilities Management
VA U.S. Department of Veterans Affairs

Drawing Title: FLOOR PLANS
Phase: BID DOCUMENTS
Project Title: GAINESVILLE VAMC DATA CENTER & EHRM INFRASTRUCTURE UPGRADES DESIGN
Project Number: VA Project No. 573-21-106 RDC/JPA Project No. 23072.00
Building Number: 43
Approved: STATION CHIEF - EDWIN BURNETT
Location: GAINESVILLE FL
Drawing Number: A101
Issue Date: 04.20.2026
Checked: JC
Drawn: AC

4/20/2026 5:01:42 PM

VA FORM 08 - 6231

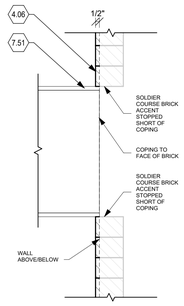

2C DETAIL
Scale: 1 1/2" = 1'-0"

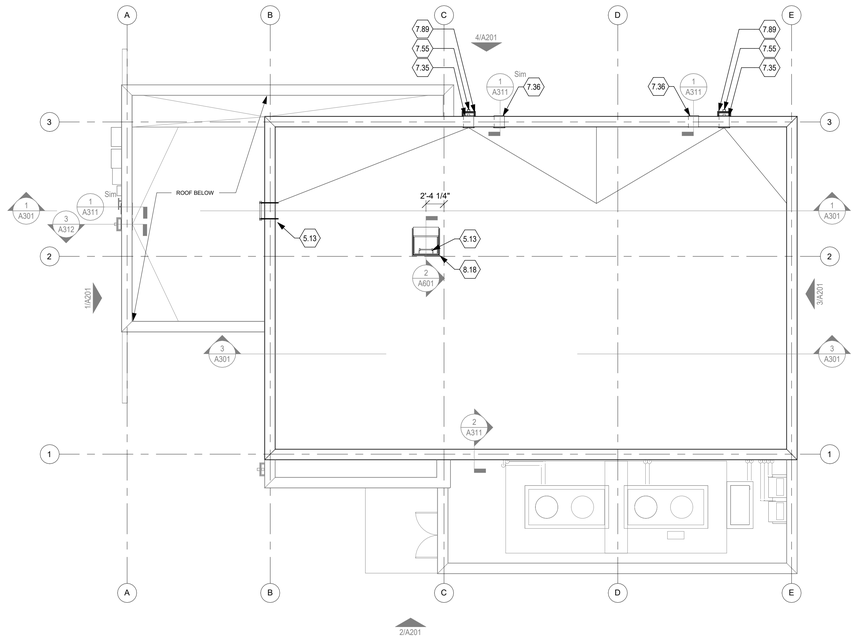

N 1 UPPER ROOF PLAN
Scale: 1/8" = 1'-0"

GENERAL NOTES

A. All roofing KEE roofing assemblies: KEE single-ply roofing membrane fully adhered to 5/8" exterior-grade gypsum board cap sheet. Cap sheet fully adhered to polyiso roof insulation. First layer of insulation to be mechanically fastened to metal deck roof. Subsequent layers of insulation to be fully adhered with mechanical fasteners as required.

B. Min. 5" Polyiso insulation on building roof. Min. 2 layers of insulation. Stagger insulation joints in all directions.

C. Min. Polyiso insulation thickness on canopy roofs to be as required for proper drainage.

D. All roofs to be sloped Min. 1/4" / 12", unless noted otherwise.

○ PLAN NOTES

4.02 Full brick at corner.
4.06 Accent brick. Projects 1/2" from face of the wall. See exterior elevations for pattern.
5.13 Steel ladder.
7.35 Through wall scupper.
7.36 Emergency overflow scupper.
7.51 Prefinished metal coping.
7.55 Prefinished metal downspout. See civil and plumbing drawings for connection to storm piping.
7.89 Scupper conductor head to match downspout.
8.18 3' x 3' roof hatch door.

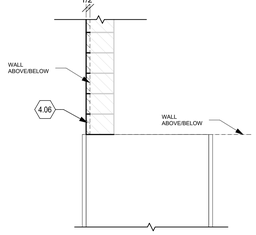

2b DETAIL
Scale: 1 1/2" = 1'-0"

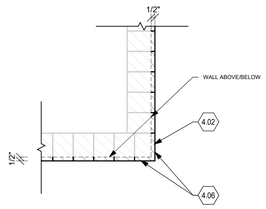

2a DETAIL
Scale: 1 1/2" = 1'-0"

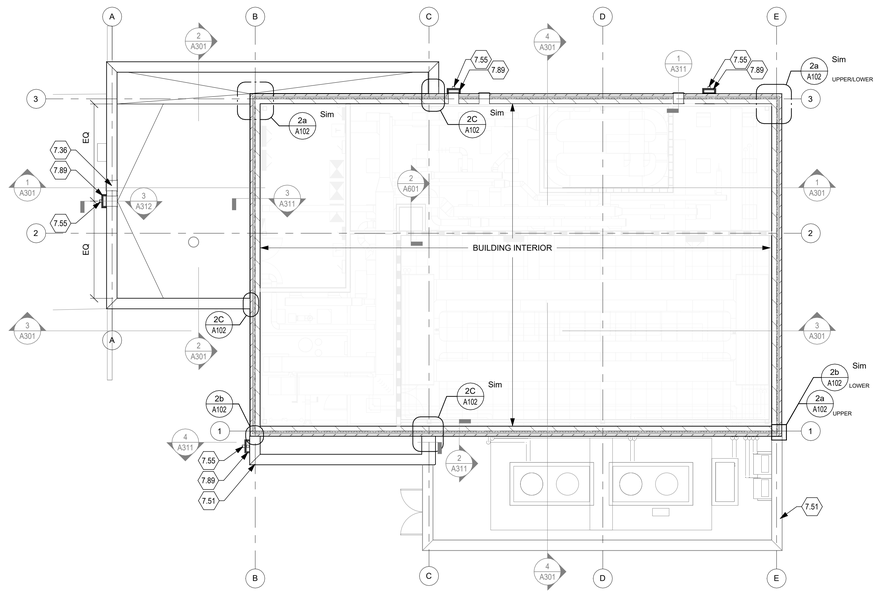

N 2 LOWER ROOF PLAN
Scale: 1/8" = 1'-0"

Revisions		Date

CONSULTANT

ARCHITECT/ENGINEER OF RECORD
RDC◆JPA ARCHITECTURE
524 Fernwood Drive, Altamonte Springs, Florida 32701 | www.rdcjpa.com | 800.362.1523

STAMP
STATE OF FLORIDA JASON PL ROSS AR101907 REGISTERED ARCHITECT

Office of Construction and Facilities Management
VA U.S. Department of Veterans Affairs

Drawing Title: ROOF PLAN
Phase: BID DOCUMENTS
Project Title: GAINESVILLE VAMC DATA CENTER & EHRM INFRASTRUCTURE UPGRADES DESIGN
Project Number: VA Project No. 573-21-106; RDC/JPA Project No. 23072.00
Building Number: 43
Approved: STATION CHIEF - EDWIN BURNETT
Location: GAINESVILLE FL
Drawing Number: A102
Issue Date: 04.20.2026
Checked: JC
Drawn: AC

4/20/2026 5:01:47 PM

VA FORM 08 - 6231

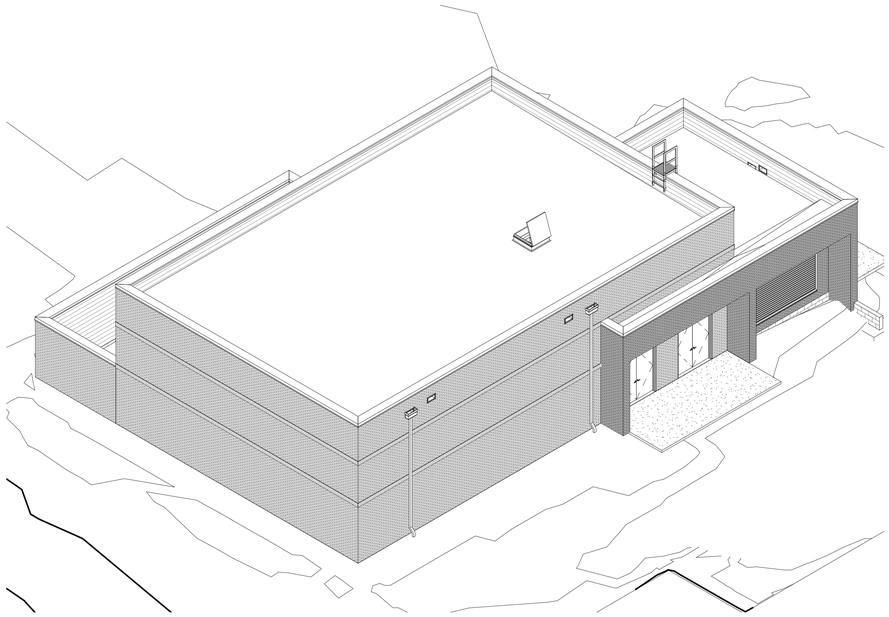

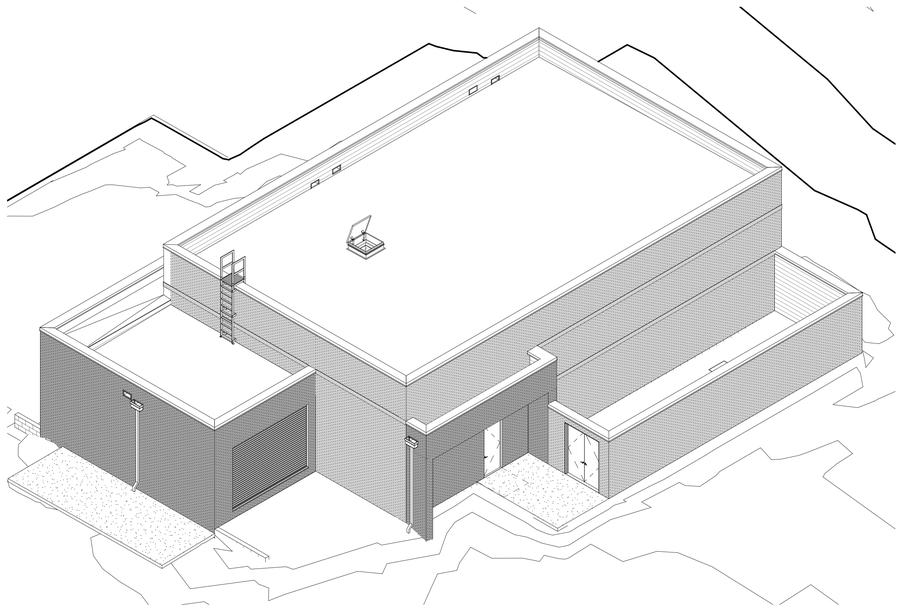

ELEVATION NOTES

- 4.01 Brick veneer.
- 4.06 Accent brick. Projects 1/2" from face of the wall. See exterior elevations for pattern.
- 5.13 Steel ladder.
- 7.36 Emergency overflow scupper.
- 7.51 Prefinished metal coping.
- 7.55 Prefinished metal downspout. See civil and plumbing drawings for connection to storm piping.
- 7.89 Scupper conductor head to match downspout.
- 23.01 Mechanical Equipment. See Mechanical Drawings.
- 23.05 Condenser unit. See Mechanical Drawings.
- 26.05 Generator connection box. See electrical drawings.
- 26.06 Grounding system for fuel truck. See electrical drawings.

3D VIEWS

Scale: N.T.S.

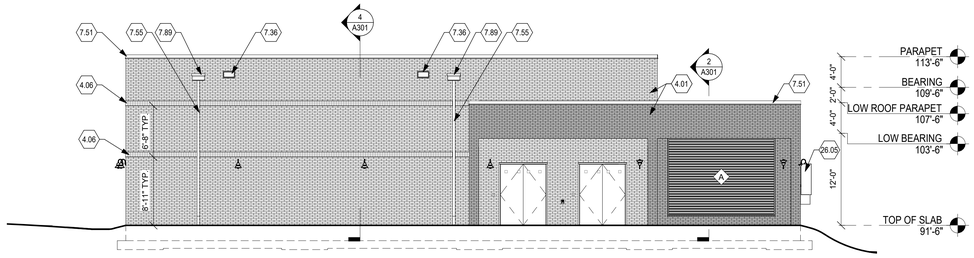

4 NORTH ELEVATION

Scale: 1/8" = 1'-0"

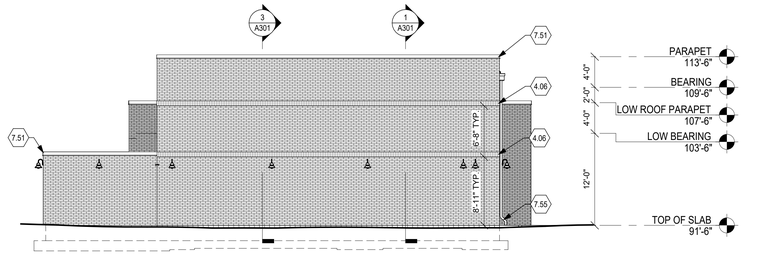

3 EAST ELEVATION

Scale: 1/8" = 1'-0"

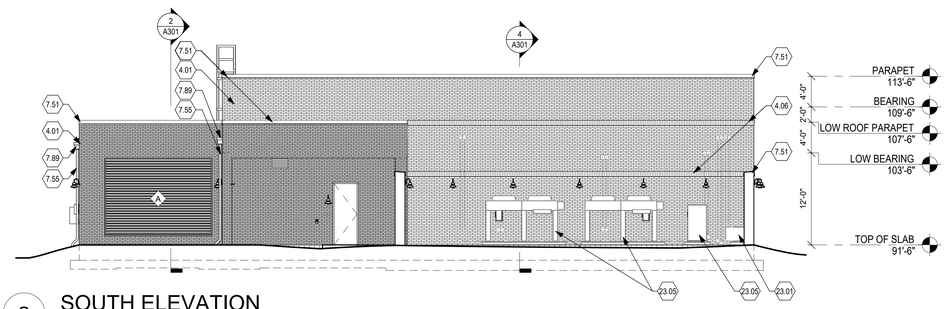

2 SOUTH ELEVATION

Scale: 1/8" = 1'-0"

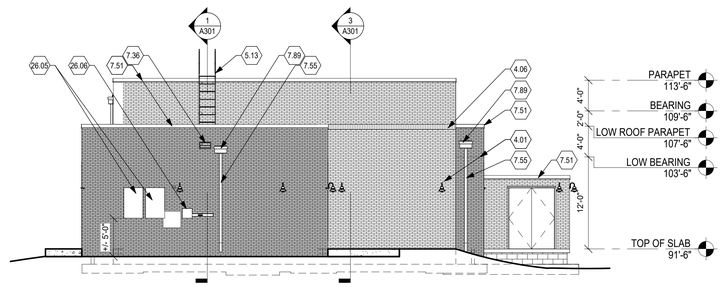

1 WEST ELEVATION

Scale: 1/8" = 1'-0"

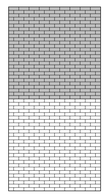

BRICK ACCENT COLOR BASIS OF DESIGN IS CHESTNUT BY TRIANGLE BRICK IN MODULAR SIZE.

BRICK COLOR MATCH BRICK ON BUILDINGS 11 AND 14. MODULAR SIZE.

TYP. BRICK COLOR

Revisions	Date

CONSULTANT

ARCHITECT/ENGINEER OF RECORD

RDC◆JPA ARCHITECTURE

524 Fernwood Drive, Altamonte Springs, Florida 32701 | www.rdcjpa.com | 800.362.1523

STAMP

STATE OF FLORIDA JASON M. ROSS AR101907 REGISTERED ARCHITECT

Office of Construction and Facilities Management

VA U.S. Department of Veterans Affairs

Drawing Title: EXTERIOR ELEVATIONS

Phase: BID DOCUMENTS

Project Title: GAINESVILLE VAMC DATA CENTER & EHRM INFRASTRUCTURE UPGRADES DESIGN

Project Number: VA Project No. 573-21-106; RDC/JPA Project No. 23072.00

Building Number: 43

Approved: STATION CHIEF - EDWIN BURNETT

Location: GAINESVILLE FL

Drawing Number: A201

Issue Date: 04.20.2026

Checked: JC

Drawn: AC

4/20/2026 5:01:57 PM

VA FORM 08 - 6231

SECTION NOTES

1.03 Stud walls around the Entrance Room and the Data Center Room to go to deck.
8.61 Prefinished aluminum louver. See Mechanical Drawings.
23.05 Condenser unit. See Mechanical Drawings.

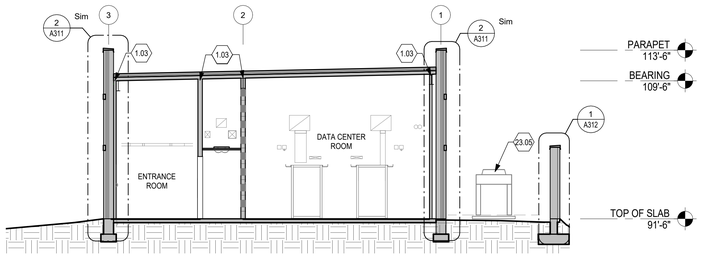

4 BUILDING SECTION

Scale: 1/8" = 1'-0"

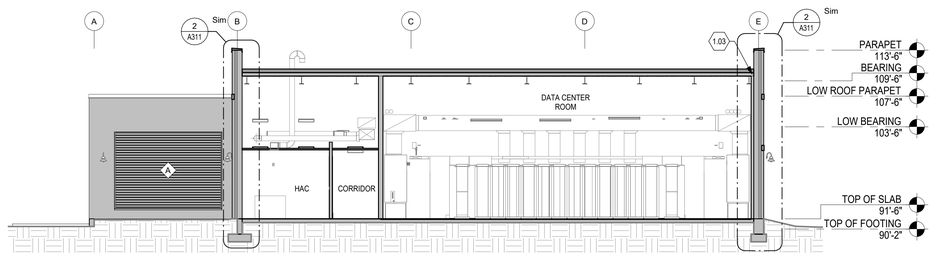

3 BUILDING SECTION

Scale: 1/8" = 1'-0"

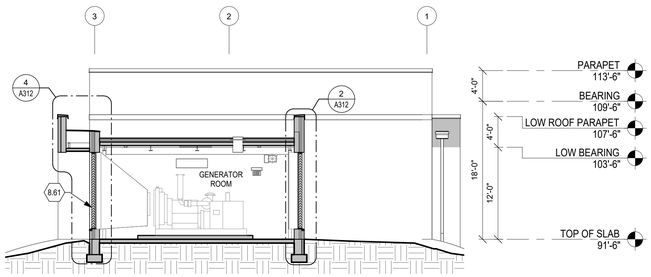

2 BUILDING SECTION

Scale: 1/8" = 1'-0"

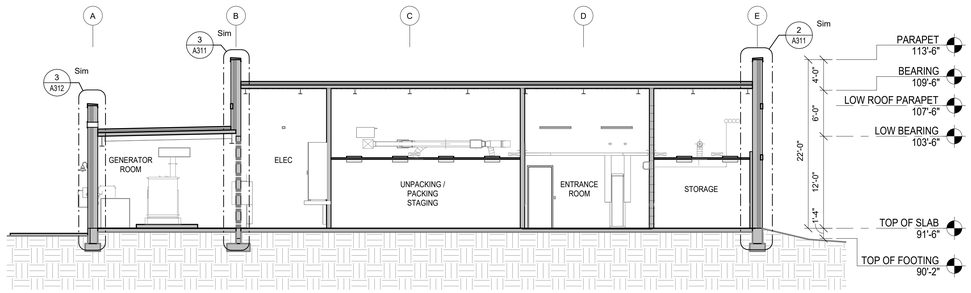

1 BUILDING SECTION

Scale: 1/8" = 1'-0"

Revisions	Date

CONSULTANT

ARCHITECT/ENGINEER OF RECORD

RDC◆JPA ARCHITECTURE

524 Fernwood Drive, Altamonte Springs, Florida 32701 | www.rdcjpa.com | 800.362.1523

STAMP

STATE OF FLORIDA JASON H. ROSS AR101907 REGISTERED ARCHITECT

Office of Construction and Facilities Management

VA U.S. Department of Veterans Affairs

Drawing Title	BUILDING SECTIONS
Phase	BID DOCUMENTS
Approved:	STATION CHIEF - EDWIN BURNETT
	FULLY SPRINKLERED

Project Title	GAINESVILLE VAMC DATA CENTER & EHRM INFRASTRUCTURE UPGRADES DESIGN
Project Number	VA Project No. 573-21-106 RDC/JPA Project No. 23072.00
Building Number	43
Location	GAINESVILLE FL
Drawing Number	A301
Issue Date	04.20.2026
Checked	JC
Drawn	AC

4/20/2026 5:02:01 PM

VA FORM 08 - 6231

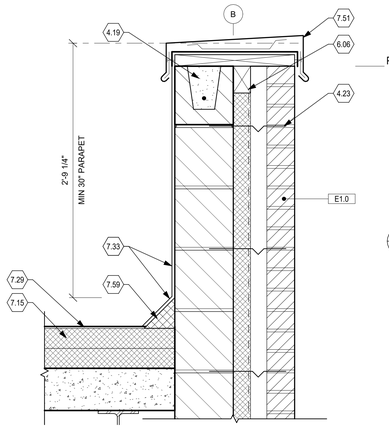

3a DETAIL

Scale: 1 1/2" = 1'-0"

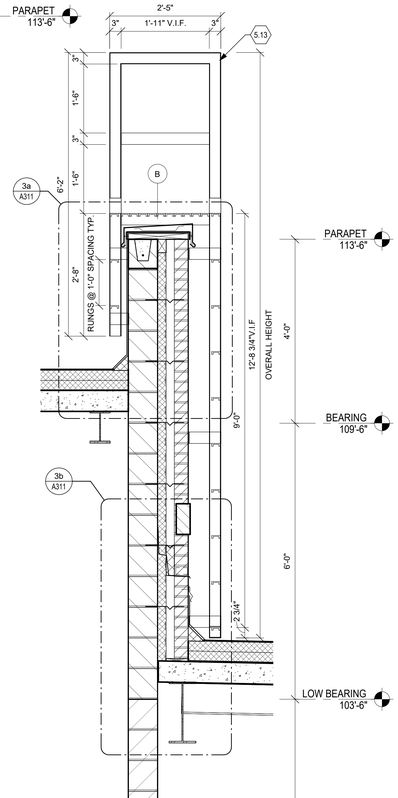

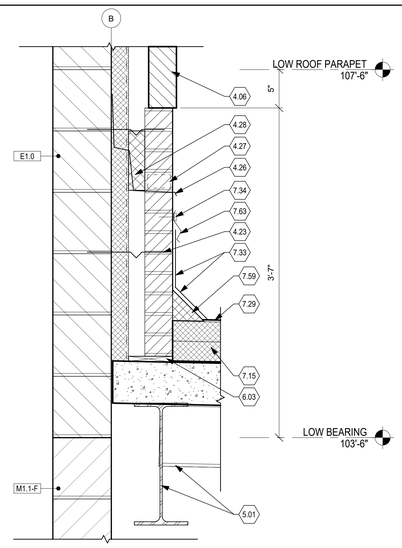

3b DETAIL

Scale: 1 1/2" = 1'-0"

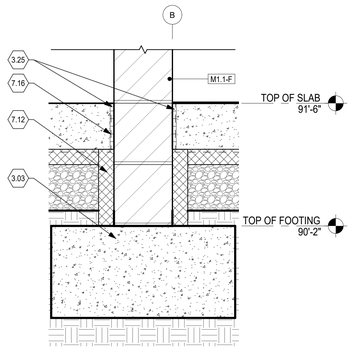

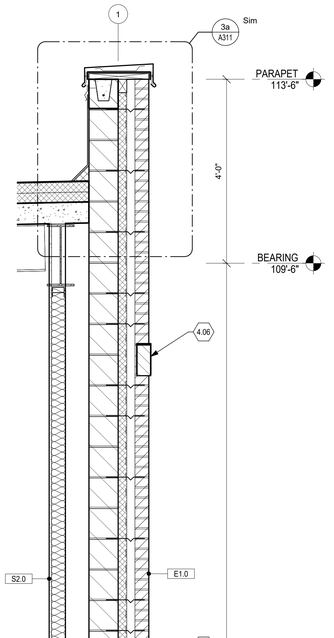

SECTION NOTES

- 3.03 Concrete footing. See Structural Drawings.
- 3.10 Granular (drainage) fill.
- 3.25 1/2" expansion material.
- 4.06 Accent brick. Projects 1/2" from face of the wall. See exterior elevations for pattern.
- 4.19 Concrete masonry unit bond beam. See Structural Drawings.
- 4.23 Masonry veneer anchor.
- 4.26 Thru wall flashing.
- 4.27 Full joint weep/vent @ 24" O.C. horizontal.
- 4.28 Cavity drainage mesh.
- 4.30 Grout Solid.
- 5.01 Structural steel frame. See Structural Drawings.
- 5.13 Steel ladder.
- 6.03 2" x wood blocking.
- 6.05 2" x 6" presure treated wood blocking.
- 6.06 2" x preservative treated wood blocking.
- 7.12 Rigid thermal wall insulation, R-12 min.
- 7.15 Polyisocyanurate roof insulation. R-30 min.
- 7.16 Vapor retarder. Seal all joints and penetratons.
- 7.17 Air and moisture barrier. Lap air and moisture barrier over thru-wall flashing.
- 7.20 1/2" thermal break.
- 7.29 Ethylene interpolymer (kee) roofing membrane.
- 7.33 Extend membrane [flashing] up back of parapet, over blocking and turn down exterior face of blocking.
- 7.34 Termination bar.
- 7.36 Emergency overflow scupper.
- 7.51 Prefinished metal coping.
- 7.59 Fiber board cant.
- 7.63 Metal counterflashing.
- 7.69 Metal flashing locked and soldered.
- 7.70 Roof side flange.
- 9.02 3 5/8" non-structural metal framing @ 16" o.c.
- 33.02 Foundation drain. See Civil Drawings for connection to storm piping.

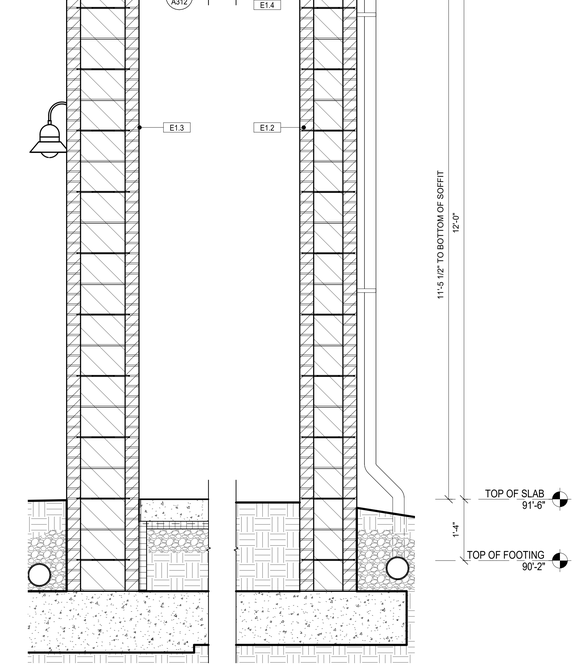

4 WALL SECTION

Scale: 3/4" = 1'-0"

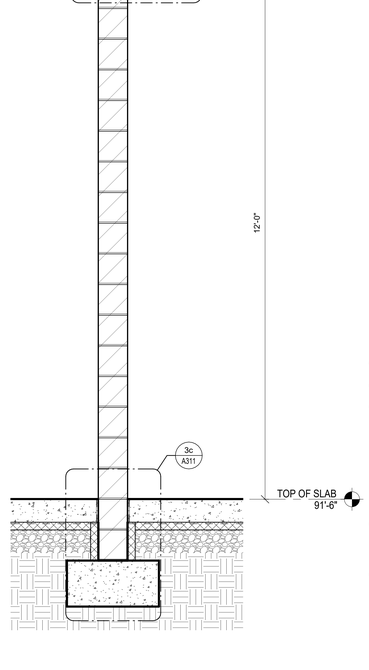

3 WALL SECTION

Scale: 3/4" = 1'-0"

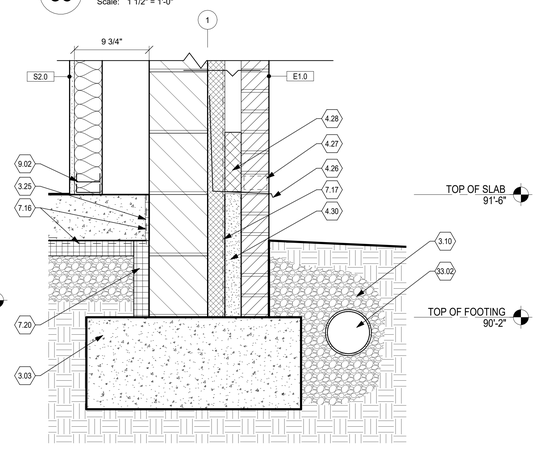

2b DETAIL

Scale: 1 1/2" = 1'-0"

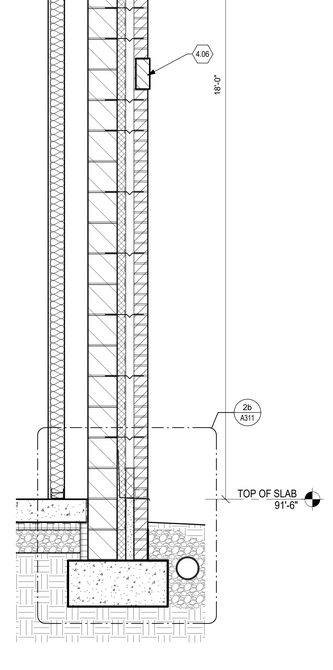

2 WALL SECTION

Scale: 3/4" = 1'-0"

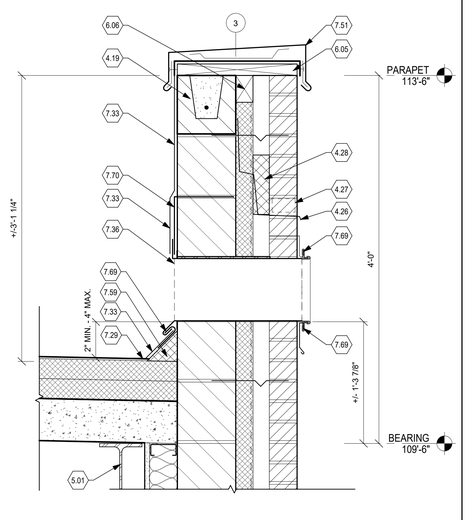

1 DETAIL

Scale: 1 1/2" = 1'-0"

Revisions	Date	CONSULTANT	ARCHITECT/ENGINEER OF RECORD RDC◆JPA ARCHITECTURE 524 Fernwood Drive, Altamonte Springs, Florida 32701 | www.rdcjpa.com | 800.362.1523	STAMP STATE OF FLORIDA JASON H. ROSS REGISTERED ARCHITECT AR101907	Office of Construction and Facilities Management VA U.S. Department of Veterans Affairs	Drawing Title: WALL SECTIONS Approved: STATION CHIEF - EDWIN BURNETT	Phase: BID DOCUMENTS FULLY SPRINKLERED	Project Title: GAINESVILLE VAMC DATA CENTER & EHRM INFRASTRUCTURE UPGRADES DESIGN Location: GAINESVILLE FL Issue Date: 04.20.2026 | Checked: JC | Drawn: AC	Project Number: VA Project No. 573-21-106; RDCJPA Project No. 23072.00 Building Number: 43 Drawing Number: A311

VA FORM 08 - 6231

4/20/2026 5:02:08 PM

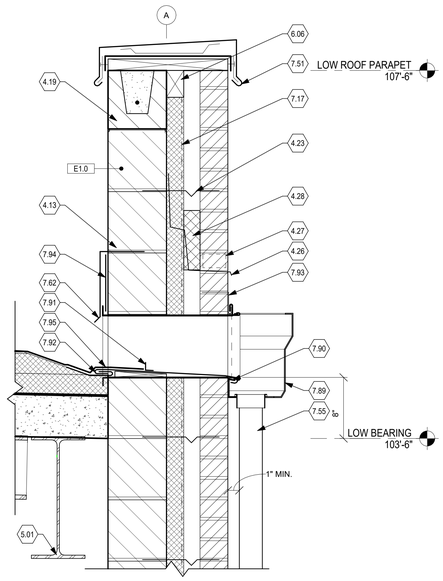

3a DETAIL
Scale: 1 1/2" = 1'-0"

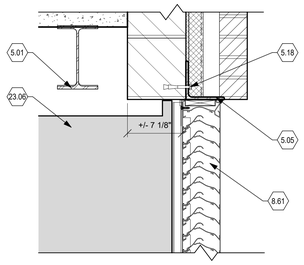

2a DETAIL
Scale: 1 1/2" = 1'-0"

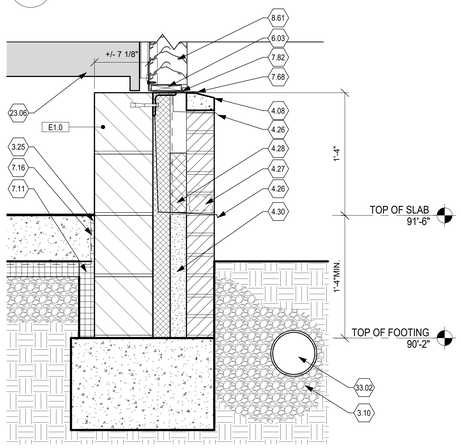

2b DETAIL
Scale: 1 1/2" = 1'-0"

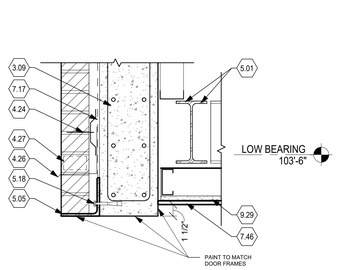

4b DETAIL
Scale: 1 1/2" = 1'-0"

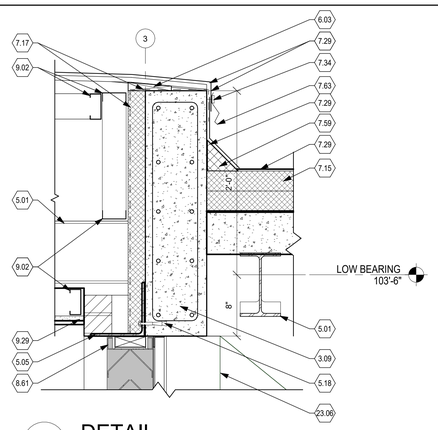

4a DETAIL
Scale: 1 1/2" = 1'-0"

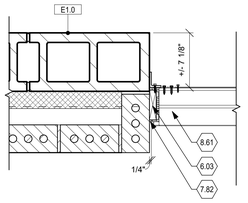

2c DETAIL
Scale: 1 1/2" = 1'-0"

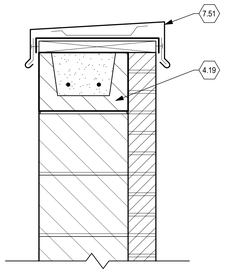

1a DETAIL
Scale: 1 1/2" = 1'-0"

SECTION NOTES

3.09	Concrete beam. See structural drawings.
3.10	Granular (drainage) fill.
3.25	1/2" expansion material.
4.08	Cast stone sill
4.13	8" concrete masonry unit. See Structural Drawings.
4.19	Concrete masonry unit bond beam. See Structural Drawings.
4.23	Masonry veneer anchor.
4.24	Adjustable masonry veneer anchors @ 16" O.C. vertical, 24" O.C. horizontal.
4.26	Thru wall flashing.
4.27	Full joint weep/vent @ 24" O.C. horizontal.
4.28	Cavity drainage mesh.
4.30	Grout Solid.
5.01	Structural steel frame. See Structural Drawings.
5.05	Steel shelf angle, painted as required. See structural drawings.
5.18	Anchors at 24" oc. See structural drawings.
6.03	2" x wood blocking.
6.06	2" x preservative treated wood blocking.
7.11	Rigid perimeter foundation insulation. R-12 minimum
7.15	Polyisocyanurate roof insulation. R-30 min.
7.16	Vapor retarder. Seal all joints and penetratons.
7.17	Air and moisture barrier. Lap air and moisture barrier over thru-wall flashing.
7.29	Ethylene interpolymer (kee) roofing membrane.
7.34	Termination bar.
7.46	12" wide metal soffit panel.
7.51	Prefinished metal coping.
7.55	Prefinished metal downspout. See civil and plumbing drawings for connection to storm piping.
7.59	Fiber board cant.
7.62	Metal flashing.
7.63	Metal counterflashing.
7.66	Downspout bracket (typical).
7.67	Downspout boot. Coordinate with civil drawings.
7.68	Metal flashing and sill pan installed under louver.
7.82	Continuous acoustic sealant @ non-rated walls / fire-rated sealant @ rated walls each side.
7.89	Scupper conductor head to match downspout.
7.90	Locked seam between conductor head and scupper.
7.91	Gravel stop.
7.92	Continuous cleat at scupper opening.
7.93	Closure flange.
7.94	Roofside flange.
7.95	Ethylene interpolymer (kee) roofing membrane extended over cleat into scupper opening.
8.61	Prefinished aluminum louver. See Mechanical Drawings.
9.02	3 5/8" non-structural metal framing @ 16" o.c.
9.29	Moisture-resistant gypsum board ceiling.
23.06	Mechanical ductwork. See mechanical drawings.
33.02	Foundation drain. See Civil Drawings for connection to storm piping.

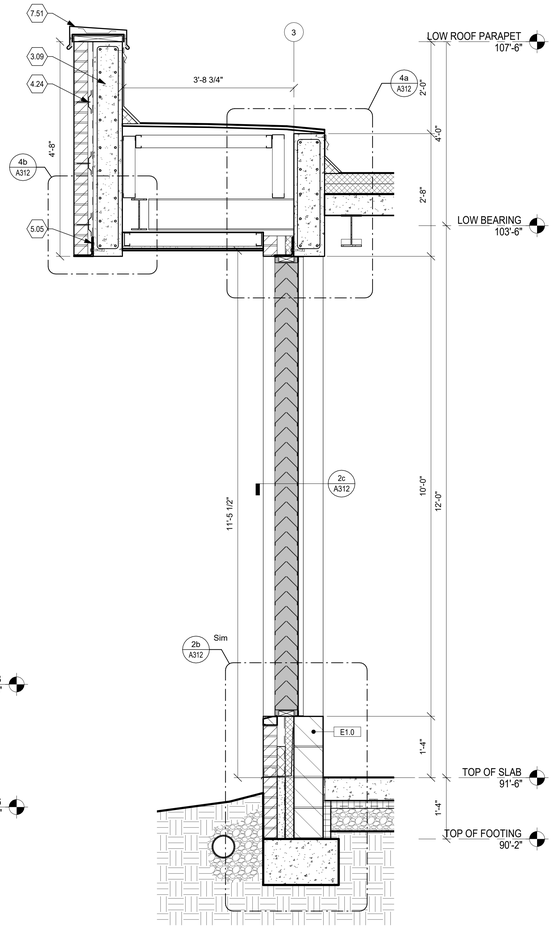

4 WALL SECTION
Scale: 3/4" = 1'-0"

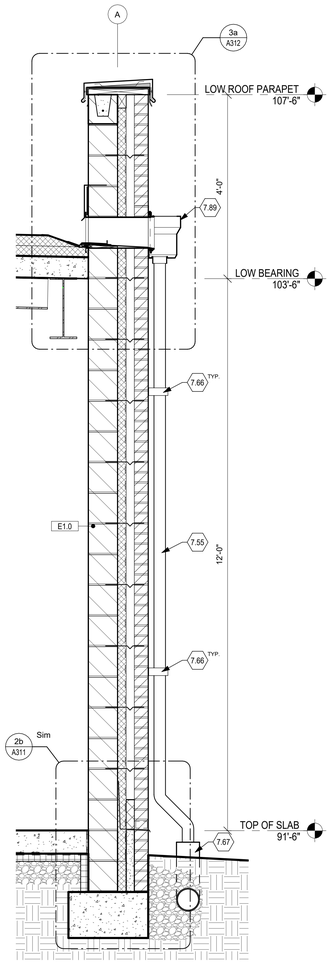

3 WALL SECTION
Scale: 3/4" = 1'-0"

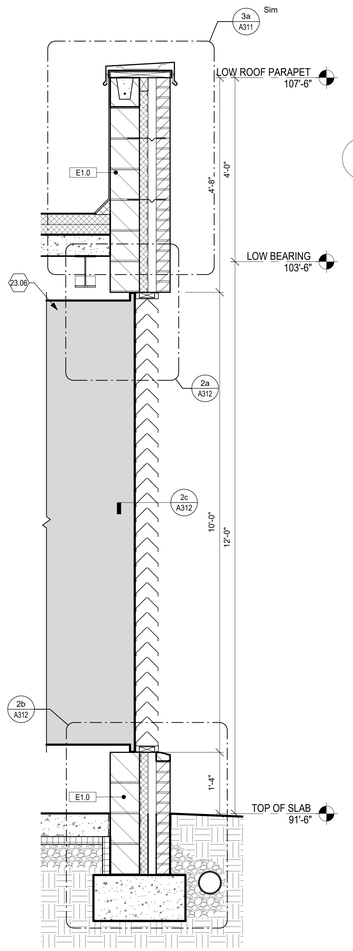

2 WALL SECTION
Scale: 3/4" = 1'-0"

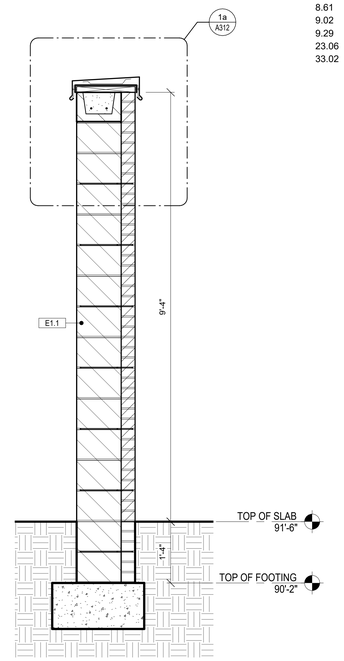

1 WALL SECTION
Scale: 3/4" = 1'-0"

Revisions	Date	CONSULTANT	ARCHITECT/ENGINEER OF RECORD RDC◆JPA ARCHITECTURE 524 Fernwood Drive, Altamonte Springs, Florida 32701 | www.rdcjpa.com | 800.362.1523	STAMP STATE OF FLORIDA · JASON H. ROSS · AR101907 · REGISTERED ARCHITECT	Office of Construction and Facilities Management VA U.S. Department of Veterans Affairs	Drawing Title: WALL SECTIONS Approved: STATION CHIEF - EDWIN BURNETT	Phase: BID DOCUMENTS FULLY SPRINKLERED	Project Title: GAINESVILLE VAMC DATA CENTER & EHRM INFRASTRUCTURE UPGRADES DESIGN Location: GAINESVILLE FL Issue Date: 04.20.2026 · Checked: JC · Drawn: AC	Project Number: VA Project No. 573-21-106, RDCJPA Project No. 23072.00 Building Number: 43 Drawing Number: A312

VA FORM 08 - 6231

4/20/2026 5:02:17 PM

DOOR SCHEDULE

DOOR #	BETWEEN		DOOR DESCRIPTION						FRAME DESCRIPTION				FIRE RATING	HDWE SET	PACS	REMARKS
	RM	RM	TYPE	MAT'L	SIZE #	W	H	T	TYPE	MAT'L	HEAD	JAMB				
100	105	100	F	WD	2	3'-0"	8'-0"	1 3/4"	1	HM	H1	J1	90 MIN	4.0	Yes	
100a	100	101	F	WD	2	3'-0"	8'-0"	1 3/4"	1	HM	H1	J1	90 MIN	4.0	Yes	
101	101		F	HM	1	3'-0"	8'-0"	1 3/4"	2	HM	H2	J2		2.0	Yes	Blast-Rated
102	102	101	F	WD	1	3'-0"	8'-0"	1 3/4"	1	HM	H1	J1		6.0	Yes	
103	101	103	F	WD	1	3'-0"	8'-0"	1 3/4"	1	HM	H1	J1		8.0	No	
104	104		F	HM	2	3'-0"	8'-0"	1 3/4"	2	HM	H2	J2		1.0	Yes	Blast-Rated
104a	104	120	F	HM	2	3'-0"	8'-0"	1 3/4"	2	HM	H4	J4	2 HR	5.0	No	
105	105		F	HM	2	3'-0"	8'-0"	1 3/4"	2	HM	H2	J2		1.0	Yes	Blast-Rated
106	105	106	F	WD	1	3'-0"	8'-0"	1 3/4"	1	HM	H1	J1		9.0	Yes	
107		105	F	WD	1	3'-0"	8'-0"	1 3/4"	1	HM	H1	J1		7.0	No	
108			F	HM	2	3'-0"	8'-0"	1 3/4"	2	HM	H3	J3		3.0	No	Blast-Rated

DETAIL NOTES

4.01	Brick veneer.
4.13	8" concrete masonry unit. See Structural Drawings.
4.19	Concrete masonry unit bond beam. See Structural Drawings.
4.26	Thru wall flashing.
4.27	Full joint weep/vent @ 24" O.C. horizontal.
4.28	Cavity drainage mesh.
4.29	Airspace.
4.30	Grout Solid.
4.31	Bullnose block at all exposed jambs.
5.01	Structural steel frame. See Structural Drawings.
5.05	Steel shelf angle, painted as required. See structural drawings.
5.13	Steel ladder.
5.17	Steel angled cmu wall brace. Paint to match door frame.
6.17	3/4" exterior grade plywood.
7.12	Rigid thermal wall insulation, R-12 min.
7.20	1/2" thermal break.
7.29	Ethylene interpolymer (kee) roofing membrane.
7.59	Fiber board cant.
7.74	Metal flashing at hatch opening. Paint to match interior wall soffit.
7.81	Continuous sealant over backer rod.
7.82	Continuous acoustic sealant @ non-rated walls / fire-rated sealant @ rated walls each side.
8.02	Hollow metal frame. Painted as required.
8.18	3' x 3' roof hatch door.
9.02	3 5/8" non-structural metal framing @ 16" o.c.
9.08	Metal framing box header.
9.09	Double metal framing at jambs, typ.
9.21	5/8" Type X gypsum board.
9.80	Acoustic insulation

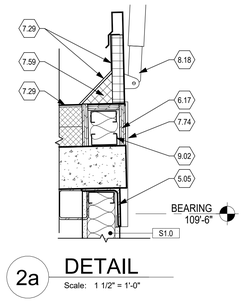

2a DETAIL
Scale: 1 1/2" = 1'-0"

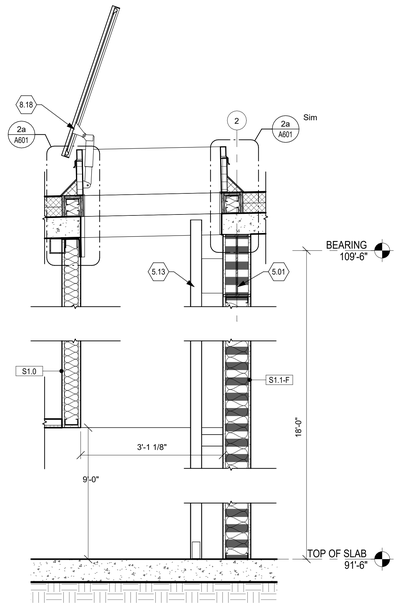

2 DETAIL
Scale: 3/4" = 1'-0"

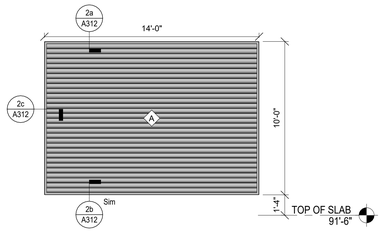

1 LOUVER ELEVATION
Scale: 1/4" = 1'-0"

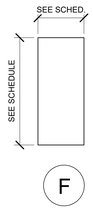

F Door Types
Scale: N.T.S.

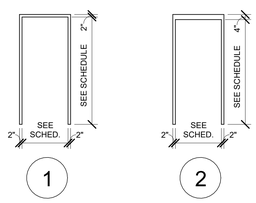

1 2 H.M. Frame Types
Scale: N.T.S.

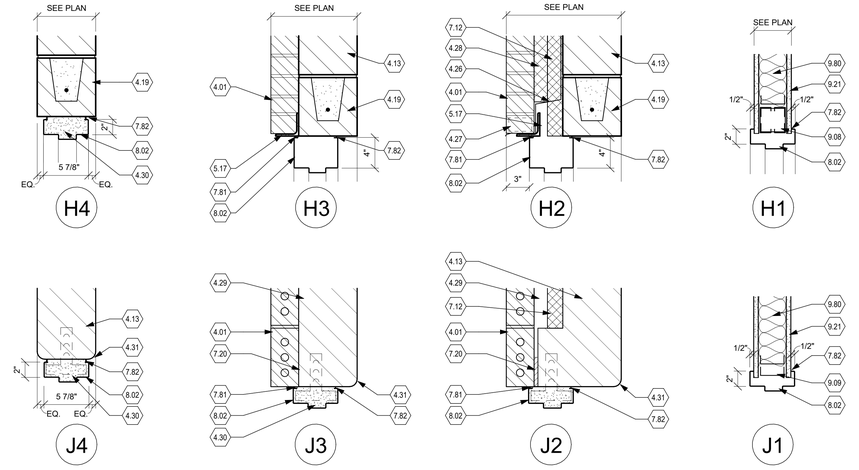

H.M. Frame Details
Scale: N.T.S.

Revisions / Date	CONSULTANT	ARCHITECT/ENGINEER OF RECORD RDC◆JPA ARCHITECTURE 524 Fernwood Drive, Altamonte Springs, Florida 32701 | www.rdcjpa.com | 800.362.1523	STAMP STATE OF FLORIDA · JASON H. ROGERS · AR101907 · REGISTERED ARCHITECT	Office of Construction and Facilities Management VA U.S. Department of Veterans Affairs	Drawing Title: DOOR SCHEDULE & DETAILS Approved: STATION CHIEF - EDWIN BURNETT	Phase: BID DOCUMENTS FULLY SPRINKLERED	Project Title: GAINESVILLE VAMC DATA CENTER & EHRM INFRASTRUCTURE UPGRADES DESIGN Location: GAINESVILLE FL Issue Date: 04.20.2026 · Checked: JC · Drawn: AC	Project Number: VA Project No. 573-21-106, RDCJPA Project No. 23072.00 Building Number: 43 Drawing Number: A601

VA FORM 08 - 6231

4/28/2026 5:02:21 PM

SIGNAGE SCHEDULE		
Type Mark	MOUNTING HEIGHT	Comments
A	60" A.F.F. TO TOP	MOUNTING HEIGHT TO BE VERIFIED BY VA

FINISH LEGEND				
CODE	FINISH TYPE	MANUFACTURER	PRODUCT / COLOR	COMMENTS
09 51 00 ACOUSTICAL CEILINGS				
ACT-1	ACOUSTICAL CEILING TILE	ARMSTRONG	ULTIMA 1911, 15/16", BEVELED TEGULAR, WHITE, 2X2	
09 65 13 RESILIENT BASE AND ACCESSORIES				
RB-1	RUBBER BASE	JOHNSONITE	TRADITIONAL WALL BASE, TOAST 283, 4"H	
09 67 23 RESINOUS FLOORING				
EP-1	EPOXY FLOORING (STATIC DISSIPATIVE)	STONHARD	STONKOTE ESD	
09 91 00 PAINTING				
P-1	PAINT (FIELD)	SHERWIN WILLIAMS	SW7636 ORIGAMI WHITE	
09 96 00 HIGH-PERFORMANCE COATINGS				
SC-1	SEALED CONCRETE	SHERWIN WILLIAMS	ARMORSEAL 1000 HS, CLEAR, GLOSS	
10 26 00 WALL AND DOOR PROTECTION				
CG-1	CORNER GUARD	INPRO	FEATHER 0238, 4' HIGH	
RWP-1	RIGID WALL PROTECTION	INPRO	FEATHER 0238, 4' HIGH	

MANUFACTURERS' TRADE NAMES AND NUMBERS ARE PROVIDED IN FINISH LEGEND TO IDENTIFY DESIGN INTENT. EQUIVALENT PRODUCTS FROM OTHER MANUFACTURERS THAT MEET REQUIREMENTS OF TECHNICAL SPECIFICATIONS WILL BE ACCEPTABLE UPON APPROVAL IN WRITING BY CONTRACTING OFFICER.

GENERAL FINISH PLAN NOTES

A. All walls to be painted P-1 unless noted otherwise.
B. All walls to receive RB-1 wall base unless noted otherwise.
C. Signage to be supplied and installed by Contractor.
D. Refer to VA Signage Manual PG-18-10 Design Manual for interior sign details, mounting heights, dimensions, and installation instructions.
E. All signage to follow VA's signage standards. Sign type, style and location to be coordinated with COR prior to fabrication and installation.

GENERAL CEILING NOTES

A. All wood blocking shall be fire retardant.
B. Light fixtures, sprinkler heads, speakers, and HVAC devices shall be located as close as possible to the center of acoustical ceiling panels. Confirm any deviation from this with the Project Engineer.
C. See P, M, E and FP drawings for additional information regarding final information and quantites of fixtures/devices to be installed in ceiling.
D. See Electrical Drawings for lighting specifications.
F. Ceiling height to be 9'-0" AFF, unless noted otherwise.

⬡ PLAN NOTES

7.46	12" wide metal soffit panel.
10.03	Alphanumeric grid identification to be posted on walls. Characters are to be 4" tall semi-gloss black lettering. Mount characters to the wall so that the top of the character is 11'-0" above finished floor and centered in the 24" grid cell.
10.04	Stenciled cross-hairs at 24" on center. Min. 4" in each direction from intersection.
26.04	Housekeeping pad.

REFLECTED CEILING PLAN LEGEND

- Recessed downlight fixture
- 2' x 2' light fixture
- 2' x 2' acoustical tile ceiling
- Gypsum board / portland cement plaster ceiling / soffit - painted
- Supply Air Diffuser
- Return Air Grille
- LED Strip Luminaire
- Access panel

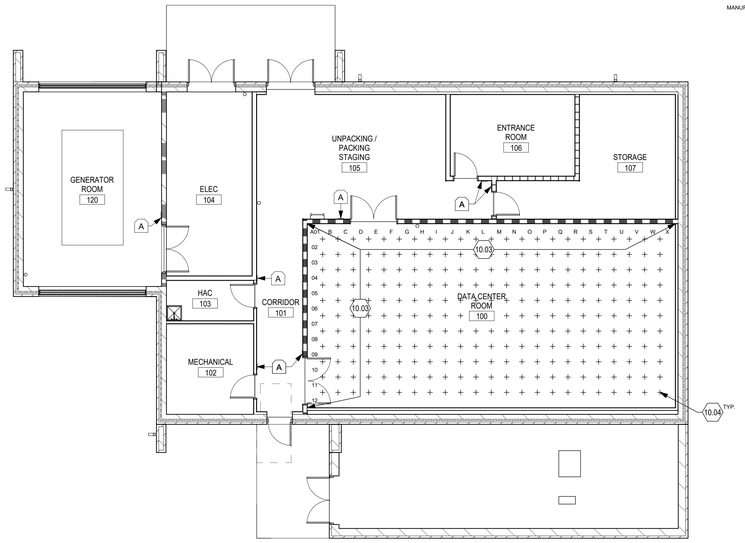

N 4 SIGNAGE PLAN
Scale: 1/8" = 1'-0"

DATA CENTER ALPHANUMERIC GRID IS SHOWN AS A DIAGRAM. CHARACTER IDENTIFICATION TO BE MOUNTED TO WALLS AT 11FT A.F.F.

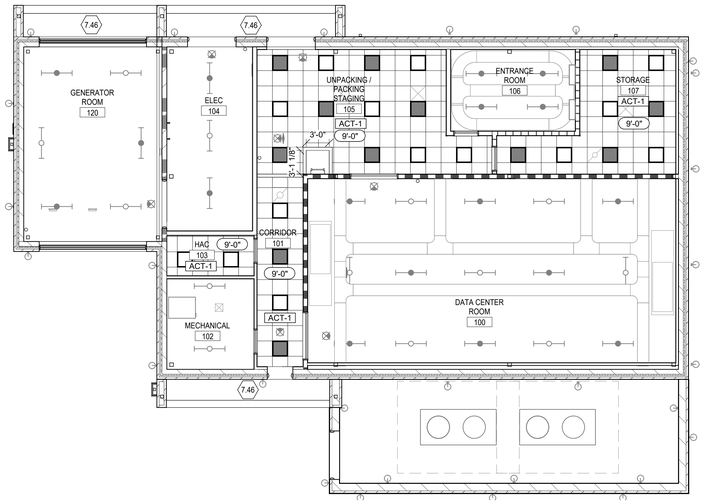

N 3 REFLECTED CEILING PLAN
Scale: 1/8" = 1'-0"

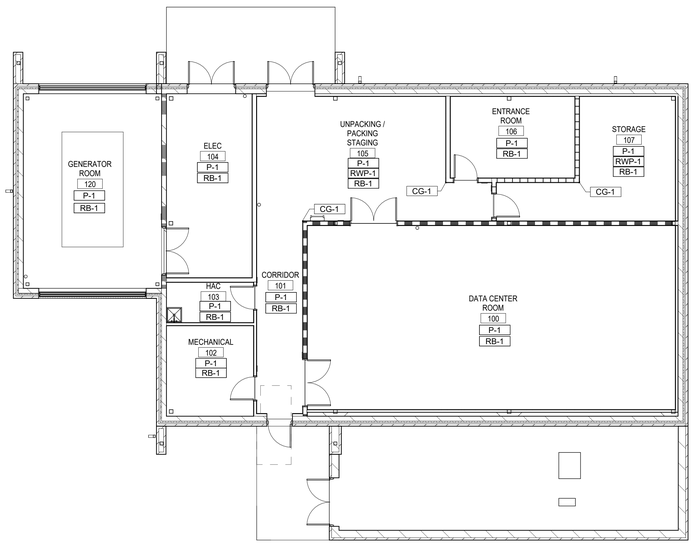

N 2 WALL FINISH & PROTECTION PLAN
Scale: 1/8" = 1'-0"

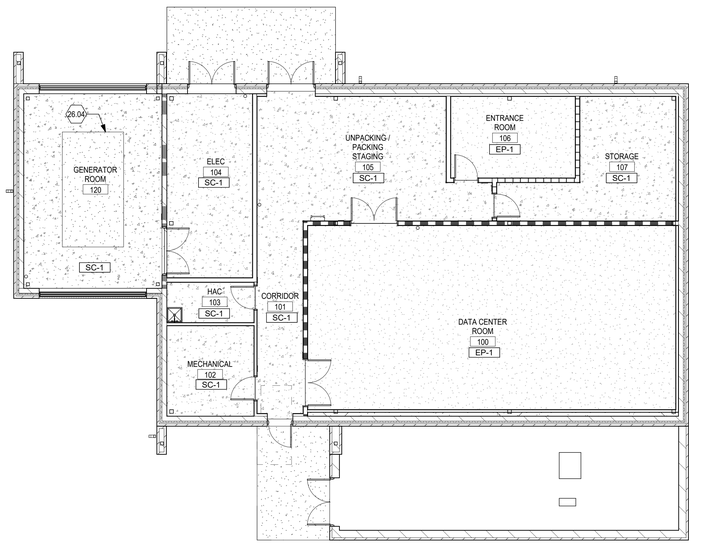

N 1 FLOOR FINISH PLAN
Scale: 1/8" = 1'-0"

Revisions	Date

CONSULTANT

ARCHITECT/ENGINEER OF RECORD
RDC◆JPA ARCHITECTURE
524 Fernwood Drive, Altamonte Springs, Florida 32701 | www.rdcjpa.com | 800.362.1523

STAMP
STATE OF FLORIDA · JASON H. ROSS · AR101907 · REGISTERED ARCHITECT

Office of Construction and Facilities Management
VA U.S. Department of Veterans Affairs

Drawing Title: FINISH PLANS & LEGEND	Phase: BID DOCUMENTS	Project Title: GAINESVILLE VAMC DATA CENTER & EHRM INFRASTRUCTURE UPGRADES DESIGN	Project Number: VA Project No. 573-21-106; RDC/JPA Project No. 23072.00
Approved: STATION CHIEF - EDWIN BURNETT	FULLY SPRINKLERED	Location: GAINESVILLE FL	Building Number: 43
		Issue Date: 04.20.2026 / Checked: JC / Drawn: BM	Drawing Number: AF101-F

4/20/2026 5:02:26 PM

VA FORM 08 - 6231

STRUCTURAL GENERAL NOTES

MISCELLANEOUS

1. THESE ABBREVIATED DRAWING NOTES ARE WRITTEN TO MATCH THE BOOK SPECIFICATIONS. IF THERE ARE ANY ITEMS THAT DO NOT CORRESPOND EXACTLY AS WRITTEN, THE MORE STRINGENT WILL TAKE PRECEDENCE.

2. THE STRUCTURAL SYSTEM IS UNSTABLE UNTIL ALL CONNECTIONS HAVE BEEN MADE AND ALL CONCRETE HAS REACHED ITS MINIMUM DESIGN STRENGTH, AS SHOWN IN THE STRUCTURAL DOCUMENTS.

3. CONTRACTOR IS RESPONSIBLE FOR MEANS AND METHODS OF CONSTRUCTION TO ENSURE THE SAFETY OF THE BUILDING UNTIL STRUCTURAL SYSTEM IS COMPLETED. THIS INCLUDES, BUT IS NOT LIMITED TO, THE ADDITION OF WHATEVER TEMPORARY BRACING, SHORING, GUYS OR TIE-DOWNS THAT MAY BE NECESSARY. SUCH MATERIAL SHALL BE REMOVED AND SHALL REMAIN THE PROPERTY OF THE CONTRACTOR AFTER COMPLETION OF THE PROJECT.

4. CONTRACTOR TO SUPPORT, BRACE AND SECURE EXISTING STRUCTURE AS REQUIRED. CONTRACTOR IS SOLELY RESPONSIBLE FOR THE SAFETY OF THE BUILDING DURING CONSTRUCTION.

5. APPLICABLE BUILDING CODE: 8TH EDITION (2023) FLORIDA BUILDING CODE.

6. GRAVITY DESIGN LOADS:

AREA	SUPERIMPOSED LIVE LOAD	SUPERIMPOSED DEAD LOAD
ROOF	20 PSF	20 PSF

7. WIND DESIGN CRITERIA:
ULTIMATE WIND SPEED: V_{ULT} = 141 MPH (3 SECOND GUST)
EQUIVALENT NOMINAL BASIC WIND SPEED V_{ASD} = 110 MPH (3 SECOND GUST)
RISK CATEGORY = IV
EXPOSURE CATEGORY = C
ENCLOSED BUILDING INTERNAL PRESSURE COEFFICIENT, GC_{PI} = +/-0.18

8. ALL MATERIALS AND WORKMANSHIP SHALL BE IN ACCORDANCE WITH THE REFERENCED BUILDING CODE.

9. COORDINATE ALL DIMENSIONS AND ELEVATIONS WITH THE ARCHITECTURAL DRAWINGS. DO NOT SCALE DRAWINGS.

10. CONTACT ENGINEER WITH ANY QUESTIONS OR DISCREPANCIES FOUND ON DRAWINGS.

11. SECTIONS AND DETAILS ARE REFERENCED IN TYPICAL LOCATIONS BUT ALSO APPLY TO ALL OTHER SIMILAR CONDITIONS.

12. CONTRACTOR TO VERIFY ALL EXISTING DIMENSIONS, ELEVATIONS, AND CONDITIONS PRIOR TO BEGINNING CONSTRUCTION.

13. SUBMIT SHOP DRAWINGS AS REQUIRED HEREIN. ALLOW FOR TWO WEEKS REVIEW TIME AFTER RECEIPT OF SUBMITTALS BY THIS FIRM. ALL SUBMITTALS SHALL BE CHECKED AND SIGNED BY THE GENERAL CONTRACTOR AND SIGNED/SEALED BY THE DELEGATED ENGINEER, WHERE SPECIFIED HEREIN.

14. CONTRACTOR SHALL NOT BE RELIEVED FROM RESPONSIBILITY FOR ERRORS OR OMISSIONS IN SHOP DRAWINGS OR MIX DESIGNS BY THE ENGINEER'S REVIEW THEREOF.

15. ANY CHANGES TO THE STRUCTURE SHALL HAVE BEEN REVIEWED AND APPROVED IN WRITING BY THE ENGINEER PRIOR TO COMMENCING WORK ON ITEMS AFFECTED.

16. CONTRACTOR SHALL NOTIFY THIS OFFICE WHEN THE STRUCTURAL SYSTEM IS SUBSTANTIALLY COMPLETED, AND BEFORE SHEATHING, CEILINGS, OR ROOFING IS INSTALLED.

HAND RAILS

1. AN ENGINEER REGISTERED IN THE STATE OF FLORIDA SHALL DESIGN RAILING SYSTEM AND CONNECTION OF IT TO THIS STRUCTURE.
2. SUBMIT SHOP DRAWINGS BEARING THE EMBOSSED SEAL AND THE SIGNATURE OF THE ENGINEER FOR REVIEW PRIOR TO FABRICATION.

3. THE CONFIGURATION OF THE RAILING SYSTEM SHALL BE AS SHOWN ON THE ARCHITECTURAL DRAWINGS.

4. RAILING SYSTEM AND CONNECTIONS SHALL BE DESIGNED FOR APPLICABLE LOADS AS INDICATED ON THE PLANS AND IN THE BUILDING CODE. THE LOADS SHALL BE CLEARLY INDICATED ON SHOP DRAWINGS.

5. SHOP DRAWINGS SHALL SHOW AND SPECIFY CONNECTIONS UTILIZED WITHIN THE RAILING SYSTEM AS WELL AS CONNECTIONS TO AND LOADS IMPOSED UPON THE STRUCTURAL SYSTEM SHOWN ON THESE PLANS.

GLAZED CURTAIN WALL, STOREFRONT, WINDOW AND DOOR SYSTEMS

1. EXTERIOR GLAZED OPENINGS SHALL BE DESIGNED IN ACCORDANCE WITH ACCEPTED ENGINEERING PRINCIPLES AND GOVERNING CODES.

2. THIS BUILDING HAS BEEN DESIGNED AS "ENCLOSED". REFER TO THE STRUCTURAL DRAWINGS FOR COMPONENTS AND CLADDING MINIMUM DESIGN WIND PRESSURES.

3. THIS SITE IS LOCATED WITHIN A WIND BORNE DEBRIS REGION, AS SHOWN IN FIGURE 1609 OF THE FLORIDA BUILDING CODE, ALL EXTERIOR GLAZED OPENINGS SHALL BE DESIGNED AND TESTED FOR MISSILE IMPACT OR PROTECTED BY APPROVED SCREENS OR SHUTTERS.

4. A LICENSED PROFESSIONAL ENGINEER SHALL DESIGN THE EXTERIOR GLAZED SYSTEMS, SHOP DRAWINGS, AND OVERSEE ANY LOAD TESTING.

5. SIGNED AND SEALED SHOP DRAWINGS OR NOTICE OF ACCEPTANCE (NOA), OR FLORIDA PRODUCT APPROVAL DOCUMENTATION SHALL BE SUBMITTED IN ACCORDANCE WITH THE ARCHITECT'S REQUIREMENTS.

6. GLAZING AND WINDOW SYSTEMS SHALL BE DESIGNED TO RESIST BLAST LOADING AND PROVIDE THE LEVEL OF PROTECTION AS SPECIFIED ON THESE DRAWINGS. SEE BLAST DESIGN CRITERIA.

DELEGATED ENGINEER

1. WHERE NOTED HEREIN, A LICENSED PROFESSIONAL (DELEGATED) ENGINEER SHALL BE RETAINED TO DESIGN THE PRODUCT OR ASSEMBLY.

2. THE DELEGATED ENGINEER SHALL BE EXPERIENCED IN THE DESIGN OF THE REFERENCED PRODUCT OR ASSEMBLY.

3. THE DELEGATED ENGINEER MUST BE PROVIDED WITH A COPY OF THESE DRAWINGS AND SPECIFICATIONS.

4. IT IS THE DELEGATED ENGINEER'S RESPONSIBILITY TO REVIEW THE ENGINEER OF RECORD'S WRITTEN ENGINEERING REQUIREMENTS AND AUTHORIZATION FOR THE DELEGATED ENGINEERING DOCUMENT TO DETERMINE THE APPROPRIATE SCOPE OF ENGINEERING.

5. THE DELEGATED ENGINEERING DOCUMENT SHALL COMPLY WITH THE WRITTEN ENGINEERING REQUIREMENTS RECEIVED FROM THE ENGINEER OF RECORD. THEY SHALL INCLUDE THE PROJECT IDENTIFICATION AND THE CRITERIA USED AS A BASIS FOR ITS PREPARATION. IF A DELEGATED ENGINEER DETERMINES THERE ARE DETAILS, FEATURES OR UNANTICIPATED PROJECT LIMITS WHICH CONFLICT WITH THE WRITTEN ENGINEERING REQUIREMENTS PROVIDED BY THE ENGINEER OF RECORD, THE DELEGATED ENGINEER SHALL TIMELY CONTACT THE ENGINEER OF RECORD FOR RESOLUTION OF CONFLICTS.

6. THE DELEGATED ENGINEER SHALL FORWARD THE DELEGATED ENGINEERING DOCUMENT TO THE ENGINEER OF RECORD FOR REVIEW. ALL FINAL DELEGATED ENGINEERING DOCUMENTS REQUIRE THE IMPRESSED SEAL AND SIGNATURE OF THE DELEGATED ENGINEER AND INCLUDE:
   A) DRAWINGS INTRODUCING ENGINEERING INPUT SUCH AS DEFINING THE CONFIGURATION OR STRUCTURAL CAPACITY OF STRUCTURAL COMPONENTS AND/OR THEIR ASSEMBLY INTO STRUCTURAL SYSTEMS.
   B) CALCULATIONS.

GEOTECHNICAL INVESTIGATION

1. A SUBSURFACE INVESTIGATION SHALL BE COMPLETED AT THE SITE BY A LICENSED GEOTECHNICAL ENGINEER PRIOR TO BEGINNING EARTHWORK OPERATIONS.
2. THE GEOTECHNICAL ENGINEER SHALL DETERMINE THE METHOD OF TESTING. (BORINGS, PROBES, HAND AUGERS, ETC.)

3. A SIGNED/SEALED SOILS REPORT SHALL BE SUBMITTED TO THE A/E, WHICH SHALL INCLUDE SITE PREPARATION PROCEDURE, FOUNDATION DESIGN RECOMMENDATIONS, AND CONSTRUCTION TESTING REQUIREMENTS.

4. SINCE FOUNDATION DESIGN INFORMATION WAS NOT AVAILABLE AT THE TIME THESE DRAWINGS WERE PREPARED, THE FOLLOWING ASSUMPTIONS WERE MADE:
   A) MAXIMUM BEARING PRESSURE = 2500 PSF
   B) MAXIMUM SETTLEMENT = 1 INCH
   C) MAXIMUM DIFFERENTIAL SETTLEMENT = 1/2 INCH

5. THE FOUNDATION DESIGN IS SUBJECT TO CHANGE PENDING THE RESULTS OF THE GEOTECHNICAL INVESTIGATION AND PENNONI'S REVIEW OF THE SOILS REPORT.

9. EXERCISE CARE WHEN COMPACTING NEAR ADJACENT STRUCTURES. FOLLOW THE RECOMMENDATIONS IN THE SOILS REPORT AND DOCUMENT EXISTING CONDITIONS WITH PHOTOGRAPHS PRIOR TO STARTING WORK.

10. PRIOR TO CONSTRUCTION, CONTRACTOR SHALL LOCATE ALL EXISTING UNDERGROUND UTILITY LINES, TANKS, ETC. WITHIN THE CONSTRUCTION AREA AND RELOCATE THEM AS DIRECTED BY THE CIVIL ENGINEER.

11. CONTRACTOR SHALL TREAT SOIL BELOW SLAB FOR TERMITE.

12 . PROTECT PIPES & CONDUITS RUNNING THROUGH WALLS & SLABS WITH 1/2 INCH EXPANSION MATERIAL. LOWER CONTINUOUS FOOTING AND GRADE BEAMS PERPENDICULAR TO PIPE RUNS TO ALLOW PIPES TO PASS ABOVE THE FOOTING OR THROUGH THE GRADE BEAMS. ALTERNATIVELY PROVIDE A CONCRETE JACKET AT PIPES IF PIPES ARE LOW ENOUGH TO BE PLACED BELOW THE FOOTINGS AND GRADE BEAMS. LOWER FOOTING AND GRADE BEAMS PARALLEL TO PIPE RUNS TO AVOID SURCHARGE ONTO ADJACENT TRENCH EXCAVATIONS.

13. DO NOT PLACE FOOTINGS ON SLABS AGAINST SUBGRADE CONTAINING FREE WATER.

14. MAINTAIN PROPER SITE DRAINAGE DURING CONSTRUCTION TO ENSURE SURFACE RUNOFF AWAY FROM STRUCTURES AND TO PREVENT POUNDING OF SURFACE RUNOFF NEAR THE STRUCTURES.

CAST IN PLACE CONCRETE

1. ALL CAST-IN-PLACE CONCRETE WORK INCLUDES REINFORCING STEEL AND RELATED WORK SHOWN INCLUDING FORMWORK, SETTING ANCHOR BOLTS, PLATES, FRAMES, DOWELS FOR MASONRY OR OTHER ITEMS EMBEDDED IN CONCRETE.

2. APPLICABLE STANDARDS

ACI NUMBER	TITLE
117	STANDARD SPECIFICATIONS FOR TOLERANCES FOR CONCRETE CONSTRUCTION
226	GROUND GRANULATED BLAST-FURNACE SLAG
301	STANDARD SPECIFICATIONS FOR STRUCTURAL CONCRETE FOR BUILDINGS
302	GUIDE FOR CONCRETE FLOOR AND SLAB CONSTRUCTION
304	GUIDE FOR MEASURING MIXING, TRANSPORTING AND PLACING CONCRETE
304.2R	PLACING CONCRETE BY PUMPING METHODS.
305R	HOT WEATHER CONCRETING
306R	COLD WEATHER CONCRETING
308	STANDARD PRACTICE FOR CURING CONCRETE
309R	GUIDE FOR CONSOLIDATION OF CONCRETE
315	MANUAL OF STANDARD PRACTICE FOR DETAILING CONCRETE STRUCTURES
318	BUILDING CODE REQUIREMENTS FOR REINFORCED CONCRETE
347	RECOMMENDED PRACTICE FOR CONCRETE FORMWORK

CRSI NUMBER	TITLE
63	RECOMMENDED PRACTICE FOR PLACING REINFORCING BARS

3. CONCRETE MATERIALS
   A) PORTLAND CEMENT - ASTM C 150, TYPE I OR TYPE II
   B) AGGREGATES - NORMAL WEIGHT CONCRETE, COARSE AND FINE, ASTM C33. STRUCTURAL LIGHT WEIGHT ASTM C330.
   C) AIR-ENTRAINING - NOT PERMITTED
   D) WATER REDUCING - ASTM C494, TYPE A.
   E) WATER - FRESH, CLEAN AND POTABLE.
   F) NO ACCELERATORS, RETARDERS OR ADMIXTURES CONTAINING CHLORIDES WILL BE PERMITTED.
   G) FLY-ASH - ASTM C618, CLASS F, 20% MAXIMUM OF CEMENTITIOUS MATERIAL BY WEIGHT. DO NOT USE FOR EXPOSED SLABS OR ARCHITECTURAL CONCRETE.
   H) SUPER PLASTICIZER - ASTM C494, TYPE F OR G.
   I) GROUND GRANULATED BLAST-FURNACE SLAG CEMENT – ASTM C989, 50% MAXIMUM BY WEIGHT.
   J) MAXIMUM AGGREGATE SIZE - FOOTINGS = #57, OTHERS #67.

4. REINFORCING MATERIALS
   A) DEFORMED BARS - ASTM A615, GRADE 60
   B) SMOOTH DOWELS - ASTM A615, PLAIN BARS, MINIMUM YIELD STRENGTH OF 60,000 PSI.
   C) CORROSION RESISTANT UNCOATED STEEL (MMFX-2) – ASTM A615, GRADE 75 AND ASTM A1035 LOW-CARBON (8% MINIMUM) CHROMIUM BY MMFX OR EQUAL.
   D) WELDED WIRE FABRIC - ASTM A1064, PLAIN WIRE FABRIC IN FLAT SHEETS ONLY.
   E) ACCESSORIES TO CONFORM TO ACI 315.
   F) WHERE CONCRETE SURFACES ARE EXPOSED, MAKE THOSE PORTIONS OF ALL ACCESSORIES IN CONTACT WITH THE CONCRETE SURFACE OR WITHIN 1/2 INCH THEREOF, OF PLASTIC OR STAINLESS STEEL.

5. PROVIDE THE FOLLOWING MINIMUM CONCRETE STRENGTHS AT 28 DAYS:
   A) FOOTINGS, SLAB-ON-GRADE--3000 PSI
   B) LIGHWEIGHT/ NORMAL WEIGHT CONCRETE ON METAL DECK--------3000 PSI
   C) FORMED COLUMNS, WALLS, BEAMS & SLABS-------------------------------4000 PSI

6. CONCRETE MUST BE BATCHED, MIXED AND TRANSPORTED IN ACCORDANCE WITH THE SPECIFICATIONS FOR READY-MIXED CONCRETE ASTM C94.

7. REQUIRED SLUMP = 4 PLUS OR MINUS ONE INCH.

8. CONCRETE MUST BE PLACED WITHIN 90 MINUTES OF BATCH TIME. WHEN AIR TEMPERATURE IS BETWEEN 85 AND 90 DEGREES F, REDUCE MIXING AND DELIVERY TIME TO 75 MINUTES. WHEN AIR TEMPERATURE IS HIGHER THAN 90 DEGREES F, REDUCE MIXING AND DELIVERY TIME TO 60 MINUTES.

9. DO NOT ADD WATER AT THE JOB SITE WITHOUT APPROVAL OF THE PROJECT SUPERINTENDENT. DO NOT EXCEED THE SLUMP LIMITATION. USE ONLY COLD WATER FROM THE TRUCK TANK. ANY ADDED WATER MUST BE INDICATED ON THE DELIVERY TICKET PLUS THE NAME OF THE PERSON AUTHORIZING. TEST CYLINDERS SHALL BE TAKEN AFTER THE ADDITION OF WATER.

10. LAP SPLICE REINFORCING PER CONCRETE LAP SCHEDULE MINIMUM UNLESS OTHERWISE SHOWN OR NOTED.

11. PROVIDE CORNER BARS AT ALL WALL FOOTING, WALL AND BEAM CORNERS. SIZE AND NUMBER TO MATCH HORIZONTAL BARS.

12. PROVIDE FOUNDATION DOWELS TO MATCH SIZE AND NUMBER OF VERTICAL BARS. EMBED DOWELS TO:
   A) 3" ABOVE BOTTOM OF FOOTINGS

13. REINFORCEMENT SHALL BE FASTENED AND SECURED TOGETHER TO PREVENT DISPLACEMENT BY CONSTRUCTION LOADS OR THE PLACING OF CONCRETE.

14. REINFORCING BAR COVER
   A) FOOTINGS 2" (TOP), 3" (SIDES AND BOTTOM)
   B) COLUMNS AND BEAMS 1-1/2"
   C) SLABS 3/4" (INTERIOR), 1-1/2" (EXTERIOR)

15. WHERE BAR LENGTHS ARE GIVEN ON THE DRAWINGS, LENGTH OF HOOK, IF REQUIRED, IS NOT INCLUDED.

16. SELECT PROPORTIONS IN ACCORDANCE WITH ACI 301 TO PROVIDE CONCRETE CAPABLE OF BEING PLACED WITHOUT EXCESSIVE SEGREGATION AND WITH ACCEPTABLE FINISHING PROPERTIES, DURABILITY, SURFACE HARDENERS, APPEARANCE, AND STRENGTH REQUIREMENTS REQUIRED BY THESE SPECIFICATIONS.

17. CHAIR WELDED WIRE FABRIC REINFORCING AT 3'-0" ON CENTER MAXIMUM IN EACH DIRECTION.

18. MAXIMUM WATER TO CEMENT RATIO:
   A) 4000 PSI, 28-DAY COMPRESSIVE STRENGTH; W/C RATIO, 0.44 MAXIMUM. (NON-AIR-ENTRAINED), 0.36 MAXIMUM. (AIR-ENTRAINED)
   B) 3000 PSI, 28-DAY COMPRESSIVE STRENGTH; W/C RATIO, 0.58 MAXIMUM. (NON-AIR-ENTRAINED), 0.47 MAXIMUM. (AIR-ENTRAINED)

19. DATA TO BE SUBMITTED:
   A) INTENDED USAGE AND LOCATION FOR EACH TYPE
   B) MIX DESIGN FOR EACH TYPE
   C) CEMENT CONTENT IN POUNDS-PER-CUBIC YARD
   D) COARSE AND FINE AGGREGATE IN POUNDS/CUBIC YARD
   E) WATER CEMENT RATIO BY WEIGHT
   F) CEMENT TYPE AND MANUFACTURER
   G) SLUMP RANGE
   H) AIR CONTENT
   I) ADMIXTURE TYPE AND MANUFACTURER
   J) PERCENT ADMIXTURE BY WEIGHT
   K) STRENGTH TEST DATA REQUIRED TO ESTABLISH MIX DESIGN.
   L) COMPLETE DETAIL AND PLACING SHOP DRAWINGS FOR ALL REINFORCING STEEL INCLUDING ACCESSORIES THAT HAVE BEEN REVIEWED AND STAMPED BY THE GENERAL CONTRACTOR. INCLUDE ALL REQUIRED DIMENSIONS AND ELEVATIONS (IE. TOP OF CONCRETE)

20. THE GENERAL CONTRACTOR IS RESPONSIBLE FOR PROVIDING THE CONSTRUCTION OF FORMWORK, SHORING AND RE-SHORING IN ACCORDANCE WITH ACI 347.
   A) FORM AND SHORING DESIGN BY A P.E. REGISTERED IN THE STATE OF FLORIDA.

21. SUBMIT FORM WORK AND SHORING DRAWINGS TO LOCAL BUILDING DEPARTMENT WHEN REQUIRED BY FLORIDA THRESHOLD LAW.

22. CONSTRUCTION JOINTS NOT SHOWN ON THE DRAWINGS MUST BE MADE AND LOCATED TO LEAST IMPAIR THE STRENGTH OF THE STRUCTURE.
   A) NO HORIZONTAL CONSTRUCTION JOINTS WILL BE PERMITTED IN BEAMS, GIRDERS AND SLABS.
   B) LOCATION OF ANY CONSTRUCTION JOINT NOT SHOWN IS SUBJECT TO REVIEW AND ACCEPTANCE BY ENGINEER.

23. INTERNAL VIBRATION, PROPERLY APPLIED IS THE REQUIRED METHOD OF CONSOLIDATING PLASTIC CONCRETE.

24. PROVIDE 3/4" CHAMFER ON ALL EXPOSED CORNERS OF COLUMNS, BEAMS AND WALLS UNLESS OTHERWISE NOTED ON ARCHITECTURAL DRAWINGS.

25. CONTRACTOR SHALL VERIFY LOCATIONS OF ALL OPENINGS, SLEEVES, AND SLAB RECESSES AS REQUIRED BY OTHER TRADES BEFORE CONCRETE IS PLACED. NO SLEEVE, OPENINGS, OR INSERT MAY BE PLACED IN BEAMS, JOISTS, OR COLUMN UNLESS APPROVED BY THE ENGINEER.

26. CONTRACTOR SHALL VERIFY EMBEDDED ITEMS INCLUDING, BUT NOT LIMITED TO, ANCHOR BOLTS, BOLT CLUSTERS, WELD PLATES, ETC., BEFORE PLACING CONCRETE. NOTIFY ENGINEER OF ANY CONFLICTS WITH REBAR.

27. ALL EXPOSED CONCRETE SURFACES TO BE IN ACCORDANCE WITH ACI 301 SECTION 5.3.3 (C) INCLUDING SURFACE TOLLERANCE CLASS A AS SPECIFIED IN ACI 117. U.N.O.

28. SEE ARCHITECTURAL DRAWINGS FOR REQUIRED CONCRETE FINISHES.

29. SLOPE WALKWAYS AND BALCONIES TO DRAIN AWAY FROM THE BUILDING.

30. BUILDING FLOOR AND SITE SLABS-ON-GRADE SHALL BE 4" MINIMUM THICKNESS, UNLESS NOTED OTHERWISE.
   A) REINFORCED WITH 6X6 - W2.9 X W2.9 W.W.F.
   B) PLACED ON 15 MIL POLYETHYLENE VAPOR RETARDER. LAP 6" AND TAPE ALL JOINTS.
   C) SAW-CUT CONTROL JOINTS @ LESS THAN OR EQUAL TO 15'-0" EACH WAY.
   D) PROVIDE HOUSEKEEPING PADS AS REQUIRED.
   E) SEE DRAWINGS FOR ANY ADDITIONAL CONDITIONS.

31. TESTING
   A) A QUALIFIED TESTING LAB SHALL BE RETAINED TO PERFORM QUALITY CONTROL WORK AND ON-SITE TESTING.
   B) SLUMP TEST - ASTM 143
   C) MOLD AND CURE TEST CYLINDERS (ASTM C-31) AND TEST CYLINDERS FOR STRENGTH (ASTM C39). TAKE ONE TEST - THREE CYLINDERS FOR EACH DAYS POUR OF 100 CUBIC YARDS, OR FRACTION THEREOF. TEST ONE CYLINDER AT 7 DAYS, TWO AT 28 DAYS. TEST CYLINDER SAMPLES SHALL BE TAKEN AT THE POINT OF DISCHARGE WHEN USING A PUMP.
   D) ONE COPY OF ALL TEST REPORTS SHALL BE SENT DIRECTLY TO THE OWNER, ENGINEER, ARCHITECT AND GENERAL CONTRACTOR.

32. CONTRACTOR SHALL PROVIDE FLATNESS AND LEVELNESS IN CONCRETE SLABS PER ACI 302.1R, FIG. 10.9 MINIMUM REQUIRED "F" NUMBERS FOR TYPE OF SLAB USE. REFER TO ACI 117 FOR FLOOR TOLERANCES.

33. REPAIR ANY CRACKS OR DEFECTIVE AREAS THAT WILL RESTORE THE AFFECTED SURFACE OR AREAS TO THEIR FULL DESIGN STRENGTH AND APPEARANCE. CONTACT THE STRUCTURAL ENGINEER FOR ADVICE AND EVALUATION.

34. ACCEPTANCE OF THE STRUCTURE WILL BE MADE IN CONFORMANCE WITH ACI 301.

35. ALL CAST-IN-PLACE CONCRETE MUST BE MAINTAINED WITH MINIMAL MOISTURE LOSS AT A RELATIVELY CONSTANT TEMPERATURE FOR A MINIMUM OF 7 DAYS FOLLOWING THE PLACING OF THE CONCRETE BY THE USE OF A WATER SPRAY, WATER SATURATED FABRIC, MOISTURE RETAINING MEMBRANE OR LIQUID CURING COMPOUND.

36. CURE SLABS-ON-GRADE FOR THE FIRST 72 HOURS BY THE USE OF:
   A) FOG SPRAYING
   B) PONDING
   C) SPRINKLING
   D) CONTINUOUSLY WET ABSORPTIVE MATS OR FABRIC
   E) CONTINUE CURING BY USE OF MOISTURE RETAINING COVER UNTIL CONCRETE HAS OBTAINED ITS SPECIFIED 28 DAY COMPRESSIVE STRENGTH.
   F) OR LIQUID CURING COMPOUND AFTER FINISHING PROCESS IS COMPLETED.
   G) CONCRETE WET CURE TIME TO BE 7 DAYS MINIMUM AT 50 DEGREES MINIMUM TEMPERATURE.

37. SUBMIT MATERIALS AND METHOD OF CURING FOR REVIEW.

38. DO NOT USE MOISTURE RETAINING CURING COMPOUNDS FOR CURING SURFACES TO RECEIVE CARPET, FLEXIBLE FLOORING, CERAMIC TILED FLOORS OR OTHER SPECIFIED FLOOR SYSTEMS, UNLESS IT HAS BEEN DEMONSTRATED THAT SUCH COMPOUNDS WILL NOT PREVENT BOND.

39. DO NOT PERMIT CONCRETE NOT FULLY CURED TO BE EXPOSED TO EXCESSIVE TEMPERATURE CHANGES OR HIGH WINDS.

40. POUR ALL GROUND SLABS ON 15 MIL MINIMUM VAPOR RETARDER IN COMPLIANCE WITH ASTM E1745, LAPPED 6" MINIMUM AND FULLY TAPED.

41. EQUIPMENT MADE OF ALUMINUM OR ALUMINUM ALLOYS, SHALL NOT BE USED FOR PUMP LINES, TREMIES, OR CHUTES OTHER THAN SHORT CHUTES SUCH AS THOSE USED TO CONVEY CONCRETE FROM A TRUCK MIXER.

42. THE CODE PROHIBITS THE USE OF ALUMINUM (CONDUIT, PIPES, ETC.) IN STRUCTURAL CONCRETE UNLESS IT IS EFFECTIVELY COATED OR COVERED.

PRECAST CONCRETE U-LINTELS AND SILLS

1. UNITS SHALL BE FABRICATED BY A FIRM ENGAGED IN THE MANUFACTURING OF PRECAST AND PRE-STRESSED CONCRETE U-LINTELS AND SILLS FOR A MINIMUM OF 5 YEARS. FABRICATOR SHALL HAVE A QUALITY ASSURANCE PROGRAM THAT COMPLIES WITH THE PROCEDURES OF MANUAL 116 BY THE PRECAST/PRE-STRESSED CONCRETE INSTITUTE PCI).

2. PLANT RECORDS OF PRODUCTION AND QUALITY CONTROL SHALL BE KEPT IN ACCORDANCE WITH PCI RECOMMENDATIONS AND MADE AVAILABLE UPON REQUEST FOR THE ARCHITECT/ENGINEER.

3. CODES AND STANDARDS:
   A) AMERICAN SOCIETY FOR TESTING AND MATERIALS(ASTM)
   1) C33 – SPECIFICATION FOR CONCRETE AGGREGATES
   2) C150 – SPECIFICATION FOR PORTLAND CEMENT
   B) PRECAST/PRE-STRESSED CONCRETE INSTITUTE (PCI) STANDARDS: MANUAL FOR QUALITY CONTROL FOR PRECAST AND PRE-STRESSED CONCRETE MNL-116.
   C) AMERICAN CONCRETE INSTITUTE: BUILDING CODE REQUIREMENTS FOR STRUCTURAL CONCRETE (ACI 318)
   D) AMERICAN CONCRETE INSTITUTE: BUILDING CODE REQUIREMENTS FOR MASONRY STRUCTURES (ACI 530)

4. CONCRETE MATERIALS:
   A) PORTLAND CEMENT: ASTM C150 TYPE I OR III, GRAY COLOR
   B) AGGREGATES: ASTM C33
   C) WATER: POTABLE
   D) ADMIXTURES: SHALL NOT CONTAIN CALCIUM CHLORIDE OR CHLORIDE IONS

5. REINFORCING
   A) DEFORMED REINFORCEMENT: ASTM A615 GRADE 40 OR 60.
   B) PRE-STRESSING STRAND: ASTM A416 270 KSI LL.

6. U-LINTEL UNITS 14 FEET IN OVERALL LENGTH AND SHORTER SHALL BE MADE OF CONCRETE WITH A MINIMUM STRENGTH OF 3500 PSI AT 28 DAYS.

7. U-LINTEL UNITS EXCEEDING 14 FEET IN OVERALL LENGTH SHALL BE MADE OF CONCRETE WITH A MINIMUM STRENGTH OF 6000 PSI AT 28 DAYS AND SHALL BE PRE-STRESSED CONCRETE.

8. SILL UNITS SHALL BE MADE OF CONCRETE WITH A MINIMUM STRENGTH OF 3000 PSI AT 28 DAYS.

9 UNITS SHALL BE SAND BLOCK FINISH EXCEPT PRE-STRESSED, 6" WIDE, AND 12" WIDE U-LINTELS SHALL BE SMOOTH FORM FINISHED.

10. PRECAST CONCRETE U-LINTELS SHALL BE DESIGNED BY A LICENSED DELEGATED ENGINEER.

11. SUBMITTALS
   A) PROVIDE MANUFACTURER'S CATALOG ENGINEERING DATA.
   B) MANUFACTURER SHALL RATE U-LINTEL UNITS FOR GRAVITY, UPLIFT, AND LATERAL LOADS IN UNITS OF POUNDS PER LINEAR FOOT.

MASONRY

1. HOLLOW LOAD BEARING UNITS SHALL CONFORM TO ASTM C90, NORMAL WEIGHT, TYPE II. MINIMUM NET COMPRESSIVE UNIT STRENGTH = 2000 PSI. (NET AREA COMPRESSIVE MASONRY STRENGTH F'M = 2000 PSI).

2. MORTAR SHALL BE TYPE S AND CONFORM TO ASTM C270 (PROPORTION OR PROPERTY SPECIFICATION).

3. COARSE GROUT SHALL CONFORM TO ASTM C476:
   A) 2500 PSI AT 28 DAYS.
   B) 1/4" MAXIMUM AGGREGATE.
   C) 8" - 11" SLUMP.

4. CODES AND STANDARDS:
   A) SPECIFICATIONS FOR MASONRY STRUCTURES - ACI 530.1/ASCE 6/ TMS 602 IS INCLUDED BY REFERENCE IN ITS ENTIRETY.
   B) BUILDING CODE REQUIREMENTS FOR MASONRY STRUCTURES – ACI 530/ ASCE 5/TMS 402.

5. A REINFORCED TIE BEAM SHALL BE PROVIDED IN ALL WALLS SHOWN ON THE STRUCTURAL DRAWINGS AT EACH FLOOR, THE ROOF, AND AT TOP OF ANY PARAPET WALL. USE GALVANIZED MESH-TYPE CELL CAPS. PROVIDE CORNER BARS AT ALL BEAM CORNERS TO MATCH HORIZONTAL BARS.

6. UNLESS NOTED OTHERWISE, TIE BEAMS SHALL BE AS FOLLOWS:
   A) FLOOR LEVELS: DOUBLE COURSE OF KNOCK-OUT BLOCKS WITH (1) #5 BAR IN EACH COURSE.
   B) ROOF LEVEL: DOUBLE COURSE OF KNOCK-OUT BLOCKS WITH (1) #5 IN EACH COURSE.
   C) TOP OF PARAPET: (1) #5 BAR IN GROUTED KNOCK-OUT BLOCKS.

7. VERTICAL BARS SHALL BE HELD IN POSITION AT THE TOP AND BOTTOM OF BAR AND AT 8'-0" O.C. MAXIMUM WITH A MINIMUM CLEARANCE OF 1/2" FROM MASONRY. THE CLEAR DISTANCE BETWEEN BARS SHALL NOT EXCEED ONE BAR DIAMETER, OR MORE THAN 1". CENTER BARS IN WALLS U.N.O.

8. VERTICAL REINFORCING SHALL BE AS SHOWN ON THE DRAWINGS. FILLCELLS WITH COARSE GROUT AS SPECIFIED. PROVIDE ACI 90 DEGREE STANDARD HOOKS INTO FOOTING AND ROOF TIE BEAM. LAP SPLICE VERTICAL REINFORCEMENT ABOVE FOOTING AND ABOVE EACH FLOOR LEVEL UNLESS NOTED OTHERWISE. MAINTAIN VERTICAL REINFORCING SHOWN ON PLANS ABOVE AND BELOW MASONRY OPENINGS. CONTINUE FOUNDATION DOWELS BELOW ALL MASONRY OPENINGS.

9. REINFORCED FILL CELLS ARE TO BE CLEAN AND FREE OF ANY FOREIGN MATERIAL OR DEBRIS. REMOVE ANY INSULATING MATERIAL FROM CELLS, INCLUDING POLYSTYRENE INSULATING INSERTS, PRIOR TO GROUT POUR.

10. REINFORCING BARS SHALL BE STRAIGHT EXCEPT FOR BENDS AROUND CORNERS AND WHERE BENDS OR HOOKS ARE DETAILED ON THE PLANS.

11. REINFORCING BARS SHALL BE LAPPED PER MASONRY LAP SCHEDULE MINIMUM (UNLESS OTHERWISE NOTED) WHERE SPLICED AND SHALL BE WIRED TOGETHER.

12. WHEN A FOUNDATION DOWEL DOES NOT LINE UP WITH A VERTICAL CORE, IT SHALL NOT BE SLOPED MORE THAN ONE HORIZONTAL IN SIX VERTICALS. DOWELS SHALL BE GROUTED INTO A CORE IN VERTICAL ALIGNMENT, EVEN THOUGH IT IS IN AN ADJACENT CELL TO THE VERTICAL WALL REINFORCEMENT.

13. PROVIDE HORIZONTAL WALL REINFORCING (9 GA.) HOT DIPPED GALVANIZED LADDER TYPE DUR-O-WALL (OR EQUIVALENT) AT 16" O.C. JOINT REINFORCING SHALL CONFORM TO ASTM A-951.

14. PROVIDE HORIZONTAL JOINT REINFORCEMENT AT DOORS AND WINDOWS FOR FIRST AND SECOND BLOCK COURSE ABOVE AND BELOW APERTURES. RUN REINFORCING CONTINUOUS OR EXTEND TWO FEET FROM APERTURE EDGE.

15. WIRE REINFORCEMENT SHALL BE LAPPED AT LEAST 6" AT SPLICES AND SHALL CONTAIN AT LEAST ONE CROSS WIRE OF EACH PIECE OF REINFORCEMENT IN THE LAPPED DISTANCE.

16. CLEANOUTS SHALL BE PROVIDED IN THE BOTTOM COURSE OF MASONRY IN EACH GROUT POUR WHEN THE POUR HEIGHT EXCEEDS 5'. CLEANOUTS TO BE SAW-CUT 4" X 4".
17. GROUT POUR HEIGHT SHALL NOT EXCEED 24'. PLACE GROUT IN 5' MAX. LIFTS HEIGHTS.

18. CONSOLIDATE GROUT POURS AT THE TIME OF PLACEMENT BY MECHANICAL MEANS AND RECONSOLIDATE AFTER INITIAL WATER LOSS AND SETTLEMENT.

19. ALL MASONRY FOUNDATION STEMWALLS AND RETAINING WALLS SHALL BE FULLY GROUTED.

20. STORE BLOCKS ON PALLETS AND COVER WITH PLASTIC SHEETING.

21. PLACE MASONRY IN RUNNING BOND WITH 3/8" MORTAR JOINTS. PROVIDE COMPLETE COVERAGE FACE SHELL MORTAR BEDDING, HORIZONTAL AND VERTICAL. FULLY MORTAR WEBS IN ALL COURSES OF PIERS, COLUMNS, AND PILASTERS AND ADJACENT TO GROUTED CELLS.

22. SEE DRAWINGS FOR MASONRY CONTROL JOINT LOCATIONS. SPACE AT 26'-0" O.C. AT EXTERIOR WALLS, 32'-0" O.C. AT INTERIOR WALLS UNLESS NOTED OTHERWISE.

23. SUBMITTALS:
   A) SUBMIT PROPOSED GROUT MIX DESIGN PRIOR TO CONSTRUCTION.
   B) SUBMIT PROPOSED MORTAR MIX DESIGN PRIOR TO CONSTRUCTION.
   C) SUBMIT DETAILED SHOP DRAWINGS OF REINFORCING BARS SHOWING NUMBER, SIZE, AND LOCATION. INCLUDE BAR LISTS AND BEND DIAGRAMS. INCLUDE ALL REQUIRED DIMENSIONS AND ELEVATIONS.
   D) SUBMIT COMPRESSIVE STRENGTH TESTS OF PROPOSED MASONRY UNITS PRIOR TO CONSTRUCTION. MASONRY UNITS ARE TO BE TESTED IN ACCORDANCE WITH ASTM C140.

24. A QUALIFIED TESTING LABORATORY SHALL BE RETAINED TO PERFORM THE FOLLOWING TESTS:
   A) SAMPLE AND TEST GROUT IN ACCORDANCE WITH ASTM C1019 FOR EACH 5000 SQ. FT. OF MASONRY.
   B) SLUMP TESTS - ASTM C143.
   C) MASONRY PRISM TEST IN ACCORDANCE WITH ASTM C1314. PROVIDE ONE SET OF 3 PRISMS PRIOR TO CONSTRUCTION AND DURING CONSTRUCTION FOR EACH 5000 SQ. FT. OF WALL.
25. PROVIDE 8" DEEP PRECAST REINFORCED CONCRETE LINTELS OVER ALL MASONRY OPENINGS NOT SHOWN TO HAVE A STRUCTURAL BEAM. MINIMUM END BEARING = 8". LINTEL WIDTH TO MATCH MASONRY WIDTH.

26. TOPS OF PARTIALLY CONSTRUCTED WALLS SHALL BE COVERED WITH VISQUEEN WHENEVER RAIN OCCURS AND AT THE END OF THE WORK DAY.

DRILL-IN BOLTS, SCREWS AND DOWELS

1. ADHESIVE DOWELING RODS/BOLTS SHALL BE CARBON STEEL THREADED ROD CONFORMING TO ISO 898 5.8 WITH A MINIMUM TENSILE STRENGTH OF 72.5 KSI (500MPa) AND A MINIMUM YIELD OF 58 KSI (400MPa). THREADED RODS WITH NUTS AND WASHERS INSTALLED IN ACCORDANCE WITH MANUFACTURER'S INSTRUCTIONS.

2. ANCHORING ADHESIVE SHALL BE A TWO-COMPONENT SYSTEM SUPPLIED IN MANUFACTURER'S STANDARD SIDE-BY-SIDE FOIL PACKAGE AND DISPENSED THROUGH A STATIC-MIXING NOZZLE SUPPLIED BY THE MANUFACTURER. ADHESIVE SHALL BE TESTED AND APPROVED TO MEET THE MINIMUM REQUIREMENTS OF ACI 355.4 FOR CRACKED AND UNCRACKED CONCRETE RECOGNITION. PROVIDE HILTI HY 200 SAFE SET (ESR 3187) OR RE 500 V3 (ESR 3814) ANCHORS BY HILTI OR EQUAL (E.G. SIMPSON SET-3G, ATC ULTRABOND 365CC)FOR ANCHORING TO CONCRTE AND HILTI HIT-HY 270 FOR ANCHORING TO CMU UNLESS SPECIFIED OTHERWISE IN THE STRUCTURAL DOCUMENT.
3. DRILL-IN REBAR DOWELS SHALL BE SET USING A TWO-PART ADHESIVE AS DESCRIBED ABOVE.

4. EXPANSION BOLTS SHALL BE HILTI KB TZ (ESR 1917) OR EQUAL. BOLT SHALL MEET DUCTILITY REQUIREMENTS OF ACI 318 SECTION D1.

5. EXPANSION BOLTS SHALL HAVE CARBON STEEL ANCHOR BODY AND NUT AND WASHER SHALL BE ELECTROPLATED ZINC COATING CONFORMING TO ASTM B633 TO A MINIMUM OF 5μM. STAINLESS STEEL ANCHOR EXPANSION BOLTS SHALL HAVE A STAINLESS STEEL BODY, NUT AND WASHER, AND EXPANSION SLEEVE SHALL CONFORM TO TYPE 316 STAINLESS STEEL. EXPANSION ANCHORS SHALL MEET THE MINIMUM REQUIREMENTS OF ACI 355.2 FOR CRACKED AND UNCRACKED CONCRETE. INSTALL IN ACCORDANCE WITH MANUFACTURER'S INSTRUCTIONS.

6. MASONRY SCREWS SHALL BE 1/4" DIAMETER WITH 1-5/8" MINIMUM EMBEDMENT INSTALLED IN DRILLED HOLES USING AN APPROPRIATE BIT DIAMETER.

7. SCREWS SHALL HAVE A BODY MADE OF CARBON STEEL AND SHALL BE HEAT TREATED AND SHALL HAVE 8μM ZINC COATING IN ACORDANCE WITH EN ISO 4042. PROVIDE HUS EZ (ESR 3027) SCREWS BY HILTI OR EQUAL.

8. HEAVY-DUTY CONCRETE AND MASONRY SCREWS SHALL BE TESTED AND APPROVED TO MEET THE MINIMUM REQUIREMENTS OF ACI 355.2. HILTI KWICK HUS EZ (ESR-3027 FOR CONCRETE, ESR-3056 FOR GROUT FILLED MASONRY). HEAVY DUTY SCREWS BY HILTI OR EQUAL.

9. THE CONTRACTOR SHALL ARRANGE FOR AN ANCHOR MANUFACTURER'S REPRESENTATIVE TO PROVIDE ONSITE INSTALLATION TRAINING FOR ALL OF THE ANCHORING PRODUCTS SPECIFIED.

STRUCTURAL STEEL

1. STRUCTURAL STEEL SHALL CONFORM TO THE AISC "SPECIFICATION FOR BUILDINGS", LATEST EDITION.
STEEL MATERIALS SHALL SATISFY SECTIONS 6.1 AND 6.3 OF AISC 341.
WELDED JOINTS SHALL SATISFY SECTIONS 7.3 OF AISC 341.
BOLTED JOINTS SHALL SATISFY SECTIONS 7.2 OF AISC 341.

2. WELDED CONNECTIONS SHALL CONFORM TO THE LATEST REVISED CODE OF THE AMERICAN WELDING SOCIETY, AWS D1.1. ALL WELDING SHALL BE PERFORMED USING E70XX, LOW HYDROGEN ELECTRODES. ELECTRODES ARE TO BE PROTECTED FROM MOISTURE.

3. CONNECTIONS TO BE DOUBLE ANGLE OR DOUBLE BENT PLATE FRAMED BEAM CONNECTION PER AISC UNLESS NOTED OTHERWISE. SHOP CONNECTIONS MAY BE WELDED OR BOLTED. WELDS ARE TO BE EQUAL IN STRENGTH TO BOLTS. ALL CONNECTIONS TO INCLUDE NUTS AND PLAIN HARDENED WASHERS. ALL BOLTS SHALL BE TIGHTENED SNUG TIGHT UNLESS OTHERWISE NOTED. DESIGN CONNECTIONS FOR THE SHEAR SHOWN ON THE DRAWINGS IN ACCORDANCE WITH THE LATEST EDITION OF THE AISC "MANUAL OF STEEL CONSTRUCTION".

4. SIZE AND USE OF HOLES: SEE AISC TABLE J3.3.
   A) LARGER HOLES ARE PERMITTED IN STANDARD COLUMN BASE PLATES. MAXIMUM HOLE DIAMETER = BOLT DIAMETER + 3/8". HARDENED WASHERS, TO COVER THE LARGER HOLE, SHALL BE PROVIDED.
   B) LARGER HOLES ARE NOT PERMITTED IN WIND FRAME COLUMN BASE PLATES. MAXIMUM HOLE DIAMETER = BOLT DIAMETER + 1/16".
   C) LONG SLOTTED HOLES NOT PERMITTED.
   D) SHORT SLOTTED HOLES: PROVIDE HARDENED WASHERS THAT COMPLETELY COVER THE SLOT AFTER INSTALLATION. PERMITTED IN ONLY ONE PLY OF A CONNECTION.

5. STEEL BEAMS SHALL BE FABRICATED WITH THE NATURAL CAMBER (WITHIN THE MILL TOLERANCE) LOCATED ABOVE THE HORIZONTAL CENTERLINE BETWEEN THE END CONNECTIONS.

6. VERIFY THE EXACT SIZE AND LOCATION OF ALL FLOOR AND ROOF OPENINGS FOR MECHANICAL EQUIPMENT WITH THE MECHANICAL CONTRACTOR PRIOR TO FABRICATION OF MATERIALS.

7. SHOP PRIME STEEL SURFACES EXCEPT THE FOLLOWING:
   A) SURFACES EMBEDDED IN CONCRETE OR MORTAR. EXTEND PRIMING OF PARTIALLY EMBEDDED MEMBERS TO A DEPTH OF 2 INCHES.
   B) SURFACES TO BE FIELD WELDED.
   C) SURFACES TO BE HIGH-STRENGTH BOLTED WITH SLIP-CRITICAL CONNECTIONS.
   D) SURFACES TO RECEIVE SPRAYED FIRE-RESISTIVE MATERIALS.
   E) GALVANIZED SURFACES.

8. SURFACE PREPARATION: CLEAN SURFACES TO BE PAINTED. REMOVE LOOSE RUST AND MILL SCALE AND SPATTER, SLAG, OR FLUX DEPOSITS. PREPARE SURFACES ACCORDING TO THE FOLLOWING SPECIFICATIONS AND STANDARDS.

9. PRIMING: IMMEDIATELY AFTER SURFACE PREPARATION, APPLY PRIMER ACCORDING TO MANUFACTURER'S WRITTEN INSTRUCTIONS AND AT RATE RECOMMENDED BY SSPC TO PROVIDE A DRY FILM THICKNESS OF NOT LESS THAN 1.5 MILS. USE PRIMING METHODS THAT RESULT IN FULL COVERAGE OF JOINTS, CORNERS, EDGES, AND EXPOSED SURFACES.
   A) STRIPE PAINT CORNERS, CREVICES, BOLTS, WELDS, AND SHARP EDGES.
   B) APPLY TWO COATS OF SHOP PAINT TO INACCESSIBLE SURFACES AFTER ASSEMBLY OR ERECTION. CHANGE COLOR OF SECOND COAT TO DISTINGUISH IT FROM FIRST.

10. PRIME AND PAINT ALL FIELD WELDS AFTER INSPECTION.

11. A QUALIFIED TESTING LABORATORY SHALL BE RETAINED TO PERFORM THE FOLLOWING TESTS.
   A) VISUALLY INSPECT ALL STEEL MEMBERS AND CONNECTIONS.
   B) TEST 50 PERCENT OF FULL PENETRATION WELDS.

12. ONE COPY OF ALL TEST REPORTS SHALL BE SENT DIRECTLY TO OWNER, ARCHITECT, STRUCTURAL ENGINEER, AND GENERAL CONTRACTOR.

13. STEEL SHALL CONFORM TO:
   WIDE FLANGE (WF)(WT)------ASTM A992 (50 KSI)
   SHAPES (S, L, C, MC)---------ASTM A36
   HOLLOW STRUCTURAL SECTIONS (HSS)---ASTM A500 GRADE B OR C (RECTANGULAR 50 KSI; ROUND 46 KSI)
   ANCHOR RODS---------------ASTM F1554 (55 KSI W/S1 SUPPLEMENT)
   ANCHOR BOLTS--------------ASTM A307
   FRAMING BOLTS-------------ASTM A325N OR A490N
   SHEAR STUDS---------------ASTM A108
   WELDING ELECTRODES--------E70XX

14. FASTENERS AND MATERIALS USED FOR WELDING OR OTHERWISE SECURING COMPONENTS ONE TO ANOTHER SHALL BE OF DOMESTIC (USA MADE) MANUFACTURE. SIMILARLY, ALL MATERIALS USED IN THE MANUFACTURING PROCESS SHALL BE FROM A DOMESTIC SOURCE.

15. OPENINGS THROUGH STEEL BEAMS SHALL BE PROVIDED AS DETAILED ON THE DRAWINGS. ALL SUCH OPENINGS SHALL BE MACHINE CUT IN THE SHOP. ALL RECTANGULAR OPENINGS SHALL HAVE A CORNER RADIUS OF 2 TIMES THE WEB THICKNESS, 1/2" MINIMUM.

16. SHOP AND FIELD WELDS SHALL BE DONE BY A.W.S. CERTIFIED WELDERS. PROVIDE CURRENT CERTIFICATES UPON REQUEST.

17. NO SPLICES SHALL BE PERMITTED IN ANY STRUCTURAL STEEL MEMBER UNLESS SHOWN ON APPROVED SHOP DRAWINGS.

18. STEEL STAIRS AND/OR LADDERS SHALL BE DESIGNED FOR 100 PSF LIVE LOAD BY A LICENSED DELEGATED ENGINEER, WHO SHALL SUBMIT SIGNED AND SEALED SHOP DRAWINGS. SHOP DRAWINGS SHALL SPECIFY ALL DESIGN LOADS.

19. SUBMITTALS: CONTRACTOR SHALL SUBMIT DETAILED SHOP DRAWINGS SHOWING ALL STRUCTURAL STEEL LAYOUTS AND DETAILS, SIZES OF MEMBERS, TYPE OF STEEL, CONNECTION DETAILS, WELDS, BOLTS, ETC., AS REQUIRED TO FABRICATE AND ERECT ALL STRUCTURAL STEEL FRAMING. ALL CONNECTIONS NOT SHOWN ON THE STRUCTURAL DRAWINGS SHALL BE DESIGNED BY THE DETAILER AND SUBMITTED ON SHOP DRAWINGS, SIGNED AND SEALED BY A REGISTERED FLORIDA DELEGATED ENGINEER.

20. NON-SHRINK GROUT SHALL BE: NONMETALLIC SHRINKAGE-RESISTANT GROUT, PREMIXED, NON-CORROSIVE, NON-STAINING PRODUCT CONTAINING SELECTED SILICA SANDS, PORTLAND CEMENT, SHRINKAGE COMPENSATING AGENTS, PLASTICIZING AND WATER-REDUCING AGENTS, COMPLYING WITH CRD-C621, CORPS OF ENGINEERS.

21. IF NOT SPECIFIED ON THE DRAWINGS, THE THROAT SIZE OF ANY FILLET WELD SHALL BE EQUAL TO 1/16" LESS THAN THE THINNEST CONNECTION COMPONENT.

22. NO FIELD WELDING OF GALVANIZED MEMBERS IS PERMITTED.

23. MINIMUM EMBEDMENT DEPTH OF ANCHOR BOLTS UNLESS NOTED OTHERWISE:
   A) BEAMS, COLUMNS, WALLS = 6"
   B) FOOTINGS = 3" FROM BOTTOM

24. ERECTION
   A) BEFORE ERECTION, THE CONTRACTOR IS TO REMOVE ALL MUD, DIRT OR OTHER FOREIGN MATTER, WHICH ACCUMULATES DURING HANDLING AND STORAGE.
   B) DRIFTING TO ENLARGE UNFAIR HOLES WILL NOT BE PERMITTED. DRILL SUCH HOLES TO ACCOMMODATE THE NEXT LARGER SIZE FASTENER, WHERE POSSIBLE.
   C) AFTER ERECTION, CLEAN FIELD WELDS, BOLTED CONNECTIONS, AND ABRADED AREAS WHERE SHOP COAT HAS BEEN DAMAGED. SPOT AND PRIME AREAS USING SAME MATERIAL AS SHOP COAT.
   D) SET ALL MEMBERS SO THAT, IN THEIR FINAL LOCATION, LEVEL, PLUMBNESS AND ALIGNMENT ARE WITHIN THE TOLERANCES PRESCRIBED BY AISC CODE.
   E) DOUBLE CONNECTIONS THROUGH COLUMN WEBS OR AT BEAMS THAT FRAME OVER THE TOPS OF COLUMNS MUST BE DESIGNED TO HAVE AT LEAST ONE INSTALLED BOLT REMAIN IN PLACE TO SUPPORT THE FIRST BEAM WHILE THE SECOND BEAM IS BEING ERECTED. ALTERNATIVELY, THE FABRICATOR MUST SUPPLY A SEAT OR EQUIVALENT DEVICE WITH A MEANS OF POSITIVE ATTACHMENT TO SUPPORT THE FIRST BEAM WHILE THE SECOND BEAM IS BEING ERECTED.

25. FABRICATION AND ERECTION OF STEEL MEMBERS SHALL BE IN ACCORDANCE WITH AISC 360 CHAPTER M.

26. STEEL FABRICATORS AND ERECTORS QUALITY CONTROL PROGRAMS SHALL MEET THE REQUIREMENTS OF AISC 360 CHAPTER N. CHAPTER N REQUIREMENTS SHALL BE CONSIDERED MINIMUMS. FREQUESNCY OF INSPECTIONS SHALL MEET THE REQUIREMENTS OF CHAPTER N.

METAL DECKING

1. METAL DECK WORK SHALL CONFORM TO THE REQUIREMENTS OF THE STEEL DECK INSTITUTE.

2. FASTEN DECK AS INDICATED ON PLANS.

3. METAL COMPOSITE ROOF DECK SHALL BE 2" DEEP, 18 GAUGE GALVANIZED COMPOSITE DECK DESIGNED AS UN-SHORED. (VULCRAFT 2VLI18 OR EQUIVALENT.)

4. FASTEN COMPOSITE ROOF DECK TO EACH INTERMEDIATE SUPPORT WITH (2) 5/8" DIAMETER PUDDLE WELDS AND (4) 5/8" DIAMETER PUDDLE WELDS TO EACH END LAP SUPPORT PER 36 INCH WIDTH. SIDELAPS SHALL BE FASTENED WITH #12TEK SCREWS AT 36" ON CENTER MAXIMUM.

5. MINIMUM FASTENING AT BUILDING PERIMETER OF DECK SHALL BE 5/8" DIAMETER PUDDLE WELDS AT 6" O.C.

6. METAL DECK AND SHEET METAL COATING DESIGNATION:
A. WITH STRUCTURAL CONCRETE OR INSULATING CONCRETE TOPPING – G90
B. WITHOUT STRUCTURAL CONCRETE OR INSULATING CONCRETE TOPPING – G60

7. INSTALL ALL DECKING 3 SPAN CONTINUOUS.

8. USE WELD WASHERS FOR ALL DECKING 24 GA. AND THINNER.

9. DO NOT HANG OR ATTACH DUCTWORK, CONDUIT, PIPING, EQUIPMENT, CEILINGS, ETC. FROM METAL DECKING.

10. PRIME AND PAINT ALL FIELD WELDS AFTER INSPECTION WITH A GALVANIZED TOUCH-UP PAINT. (SEE NOTE BELOW)

11. SUBMITTALS: CONTRACTOR SHALL SUBMIT DETAILED SHOP DRAWINGS SHOWING LAYOUT OF DECK, TYPE OF DECK, ALL CONNECTIONS INCLUDING END WELDS, SEAM WELDS, INTERMEDIATE WELDS, AND ALL ACCESSORY MATERIAL SUCH AS CLOSURES, SUMPS FOR DRAINS, ETC.

12. A QUALIFIED TESTING LABORATORY SHALL BE RETAINED TO VISUALLY INSPECT ALL DECK WELDS AND FASTENERS.

FIBROUS REINFORCING (ALTERNATE TO W.W.F. IN SLAB-ON-GRADE)

1. REINFORCING FIBERS TO BE 100% MACRO SYNTHETIC POLYPROPYLENE FIBERS, SPECIFICALLY MANUFACTURED FOR USE IN CONCRETE, CONTAINING NO REPROCESSED OLEFIN MATERIALS, WITH THE FOLLOWING MINIMUM PHYSICAL CHARACTERISTICS:
A) MIN. SPECIFIC GRAVITY: 0.91
B) TENSILE STRENGTH: 80-100 KSI
C) LENGTH: 2 1/4" MAXIMUM

2. REINFORCING FIBERS TO BE SUPPLIED BY THE FOLLOWING APPROVED MANUFACTURERS:
A) "TUF-STRAND", EUCLID CHEMICAL COMPANY
B) "FIBERMESH 650, PROPEX CONCRETE SOLUTIONS
C) "FORTA FERRO", FORTA CORPORATION
D) "NYCON -XL-100", NYCON, INC.
E) "SIKAFIBER FORCE", SIKA

3. FIBERS TO BE ADDED IN MANUFACTURER'S APPROVED AMOUNT WITH A MINIMUM OF 3.0 LBS PER CUBIC YARD.

4. CONCRETE TO BE MIXED IN ACCORDANCE WITH FIBER MANUFACTURER'S RECOMMENDATIONS FOR UNIFORM AND COMPLETE DISPERSION OF FIBER BUNDLES.

5. FIBERS SHALL MEET THE REQUIREMENTS OF ASTM C 1116, TYPE III, AND ASTM D7508.

6. FIBROUS REINFORCING MAY NOT BE SUBSTITUED FOR WWF OR OTHER STEEL REINFORCING IN COMPOSITE SLABS.

BLAST DESIGN CRITERIA AND REQUIREMENTS

1. THIS BUILDING IS DESIGNATED AS A MISSION CRITICAL FACILITY IN ACCORDANCE WITH THE PHYSICAL SECURITY AND RESILIENCY DESIGN MANUAL PUBLISHED BY THE U.S. DEPARTMENT OF VETERANS AFFAIRS.

2. THE DESIGN OF EXTERIOR LOAD BEARING AND NON-LOAD BEARING WALLS AND THEIR CONNECTIONS, GLAZED AND NON-GLAZED DOORS, WINDOWS AND GLAZING SYSTEMS IN THE EXTERIOR WALLS, AND AIR INTAKES AND EXHAUSTS SERVICING CRITICAL EQUIPMENT SHALL BE IN ACCORDANCE WITH THE FOLLOWING STANDARDS:
A) THE PHYSICAL SECURITY AND RESILIENCY DESIGN MANUAL (OCTOBER 1, 2020 – REVISED JUNE 1, 2025). REFER TO "PHYSICAL SECURITY BLAST DESIGN GUIDANCE REPORT 573-21-106 GAINESVILLE DATA CANTER - GAINESVILLE VAMC" BY FORCE PROTECT SECURITY CONSULTANTS (SEPTEMBER 29, 2025) FOR ADDITIONAL GUIDANCE.
B) ASCE 59-11, BLAST PROTECTION OF BUILDINGS

3. THE DESIGN BLAST LOAD CRITERIA FOR NON-LOAD BEARING WALLS, DOORS, GLAZING SYSTEMS AND OTHER PARTS OF THE EXTERIOR FAÇADE EXCEPT LOAD BEARING WALLS ARE AS FOLLOWS:
A) DESIGN LEVEL EXPLOSIVE WEIGHT THREAT: W1
B) STANDOFF DISTANCE: 50 FT.
C) PEAK PRESSURE AND IMPULSE LOAD: GP2
D) MAX. W2 DEFLECTION OF THE NON-PLOAD BEARING WALL: 3".

4. THE DESIGN BLAST LOAD CRITERIA FOR LOAD BEARING WALLS AND OTHER STRUCTURAL ELEMENTS REQUIRED FOR STRUCTURAL STABILITY ARE AS FOLLOWS:
A) DESIGN LEVEL EXPLOSIVE WEIGHT THREAT: W2
B) STANDOFF DISTANCE: 50 FT.

5. THE MAGNITUDES OF THE DESIGN LEVEL THREAT AND PEAK PRESSURE AND IMPULSE ARE DEFINED IN THE PHYSICAL SECURITY AND RESILIENCY DESIGN STANDARDS DATA DEFINITIONS. AUTHORIZED CONTRACTORS CAN CONTACT THE VA OFFICE OF CONSTRUCTION AND FACILITIES MANAGEMENT (CFM) TO REQUEST THIS DOCUMENT.

6. BUILDING COMPONENT RESPONSE UNDER BLAST LOADING SHALL NOT EXCEED THE MAXIMUM RESPONSE LIMITS FOR SDOF ANALYSIS GIVEN IN TABLE 3-2 AND TABLE 3-3 OF ASCE 59.

7. THE DEFORMATION LIMITS FOR BUILDING COMPONENTS UNDER THE BLAST DESIGN BLAST LOADS SHALL BE AS FOLLOWS
LOAD BEARING WALLS: SUPERFICIAL
SHEAR WALLS: SUPERFICIAL
COLUMNS: SUPERFICIAL
ROOF BEAMS: MODERATE
ROOF SLAB: MODERATE
NON-LOAD BEARING WALLS: MODERATE DAMAGE
GLAZING SYSTEM FRAMING: MODERATE
EXTERIOR DOORS: MODERATE

8. NON-LOAD BEARING WALLS SHALL BE DESIGNED TO ACCEPT A BLAST LOAD EQUAL TO THE MAXIMUM CAPACITY OF THE WEAKEST LITE OF SUPPORTED GLASS (BALANCED DESIGN), BUT NO LESS THAT THE DESIGN BLAST LOAD WITH A DEFORMATION RESPONSE LIMIT OF HEAVY DAMAGE.

9. THE ANCHORAGE AND CONNECTION OF GLAZING SYSTEMS AND DOORS SHALL BE DESIGNED TO TRANSFER THE CALCULATED BLAST LOAD REACTIONS TO THE SUPPORTING WALLS.

10. THE ANCHORAGE AND CONNECTION OF WALLS TO THE SUPPORTING STRUCTURE SHALL BE DESIGNED AND DETAILED TO TRANSFER THE CALCULATED BLAST LOADS TO THE SUPPORTING STRUCTURE.

11. WALLS SHALL BE DESIGNED TO RESIST THE TRIBUTARY LOADS TRANSFERRED FROM DOORS AND WINDOWS IN ADDITION TO THE CALCULATED BLAST LOADS APPLIED DIRECTLY TO THEIR SURFACE.

12. REBOUND SHALL BE CONSIDERED FOR ALL CONCRETE WALL DESIGN.

13. ALL BUILDING ELEMENTS AND THEIR CONNECTIONS THAT ARE REQUIRED TO BE DESIGNED FOR BLAST LOADING SHALL BE DESIGNED AND DETAILED SUCH THAT NO BRITTLE FAILURE MODE LIMITS THE CAPACITY OF THE SECTION.

14. GLASS IN WINDOWS, DOORS AND OTHER GLAZING SYSTEMS THAT ARE PART OF THE BUILDING EXTERIOR ENVELOPE SHALL PROVIDE A MEDIUM LEVEL OF PROTECTION (MINIMAL HAZZARD) IN ACCORDANCE WITH ASTM F1642.

15. DESIGN AND DETAILING OF GLAZING SYSTEMS, EXTERIOR DOORS, AND WALLS SHALL BE DONE USING A DYNAMIC STRUCTURAL RESPONSE ANALYSIS DEMONSTRATING THE THAT THE ELEMENTS MEET THE REQUIRED PERFORMANCE CRITERIA. THE ANALYSIS MAY BE DONE USING SIMPLIFIED SDOF ANALYTICAL METHODS DEVELOPED BY THE US GOVERNMENT OR USING ADVANCED FINITE ELEMENT METHODS. ALTERNATIVELY, TESTING IN ACCORDANCE WITH ASTM F1642 IS PERMITTED.

16. A BLAST NARRATIVE AND SUPPORTING CALCULATIONS, SIGNED AND SEALED BY A LICENSED PROFESSIONAL ENGINEER OR RESULTS FROM AIRBLAST TESTING DONE IN ACCORDANCE WITH ASTM F1642 SHALL BE SUBMITTED FOR APPROVAL FOR THE FOLLOWING COMPONENTS:
A) EXTERIOR DOORS
B) WINDOWS AND GLAZING SYSTEMS

INDEX OF DRAWINGS

SHEET NUMBER	SHEET NAME	Discipline
S001	STRUCTURAL GENERAL NOTES	STRUCTURE
S002	WIND TABLES & SCHEDULES	STRUCTURE
S100	FOUNDATION PLAN	STRUCTURE
S102	ROOF FRAMING PLAN	STRUCTURE
S501	FOUNDATION DETAILS	STRUCTURE
S502	MASONRY DETAILS	STRUCTURE
S510	FRAMING DETAILS	STRUCTURE
S601	BUILDING SECTION	STRUCTURE
S602	WALL SECTIONS	STRUCTURE
S701	ISOMETRIC VIEW	STRUCTURE

1/20/2026 7:40:27 AM

Revisions | Date

CONSULTANT
Pennoni
5755 Rio Vista Drive
Clearwater, FL. 33760-3137
(727) 325-1241
Florida Coa 7819
Jeffrey J. Salemme, P.E.
Florida P.E. 44131
Pennoni Project No. RDCJP23010

This item has been electronically signed and sealed by Jeffrey J. Salemme using a Digital Signature and date. Printed copies of this document are not considered signed and sealed and the signature must be verified on any electronic copies.

ARCHITECT/ENGINEER OF RECORD
RDC JPA
ARCHITECTURE
524 Fernwood Drive, Altamonte Springs, Florida 32701 | www.rdcjpa.com | 800.362.1523

STAMP
JEFFREY J. SALEMME
LICENSE
NO. 44131
STATE OF FLORIDA
PROFESSIONAL ENGINEER

Office of Construction and Facilities Management
VA U.S. Department of Veterans Affairs

Drawing Title: STRUCTURAL GENERAL NOTES
Approved: STATION CHIEF - EDWIN BURNETT
Phase: BID DOCUMENTS
STRUCTURAL DOCUMENTS
Project Title: GAINESVILLE VAMC DATA CENTER & EHRM INFRASTRUCTURE UPGRADES DESIGN
Location: GAINESVILLE FL
Issue Date: 04.20.2026
Checked: YY
Drawn: NM
Project Number: VA Project No. 573-21-106; RDC/JPA Project No. 23072.00
Building Number: N/A
Drawing Number: S001

VA FORM 08 - 6231

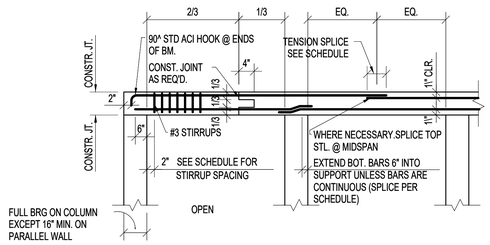

1 BEAM REINFORCING

3/4" = 1'-0"

GROSS ULTIMATE WIND LOADS MAIN ROOF ROOFING MATERIALS				
COMPONENTS AND CLADDING	ROOF ZONE			
	1	1'	2	3
PRESSURE (psf)	18.3	18.3	45.1	45.1
SUCTION (psf)	-71.8	-41.2	-94.7	-94.7

NET ULTIMATE WIND LOADS MAIN ROOF JOISTS				
COMPONENTS AND CLADDING	ROOF ZONE			
	1	1'	2	3
PRESSURE (psf)	16.0	16.0	38.8	38.8
SUCTION (psf)	-57.2	-41.2	-75.9	-75.9

ULTIMATE WIND PRESSURES (PSF) EXTERIOR DOORS, WINDOWS, WALLS				
EFFECTIVE AREA (ft)	ZONE 4		ZONE 5	
	PRESSURE	SUCTION	PRESSURE	SUCTION
1 TO 20	41.2	-44.7	41.2	-55.0
21 TO 50	39.3	-42.7	39.3	-51.1
51 TO 100	37.0	-40.4	37.0	-46.4
101 TO 150	35.2	-38.6	35.2	-42.8
151 TO 250	34.1	-37.5	34.1	-40.7
251 TO 500	32.8	-36.2	32.8	-38.0
501 + ABOVE	30.9	-34.4	30.9	-34.4

1. a= 4'-6"
2. THIS BUILDING IS DESIGNED AS AN ENCLOSED STRUCTURE. ALL EXTERIOR COMPONENTS (DOORS, WINDOWS, ETC.) MUST BE DESIGNED TO WITHSTAND THE WIND LOADINGS SPECIFIED FOR THE DESIGN OF COMPONENTS AND CLADDING IN THE TABLES.
3. TO CONVERT THE (ASCE 7-22) ULTIMATE WIND PRESSURES IN THE TABLES ABOVE TO (ASD) WIND PRESSURES, MULTIPLY EACH VALUE BY 0.6.

NET ULTIMATE WIND LOADS OVERHANGS AND CANOPIES JOISTS				
COMPONENTS AND CLADDING	ROOF ZONE			
	1	1'	2	3
PRESSURE (psf)	57.5	57.5	81.5	89.9
SUCTION (psf)	-96.5	-80.5	-115.2	-115.2

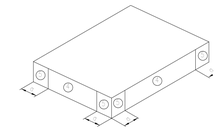

DOORS, WINDOWS AND WALLS

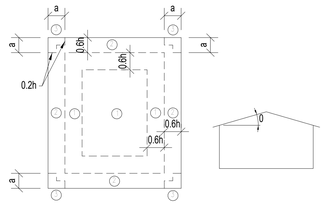

FLAT ROOF (0≤7 DEG)

COMPONENT AND CLADDING LOADING DIAGRAMS

CONCRETE BEAM TENSION LAP SPLICE SCHEDULE				
BAR SIZE	LOCATION	CONCRETE STRENGTH		
		3,000 PSI	4,000 PSI	5,000 PSI
# 4	TOP BARS	37"	32"	29"
	OTHER BARS	29"	25"	22"
# 5	TOP BARS	47"	40"	36"
	OTHER BARS	36"	31"	28"
# 6	TOP BARS	56"	48"	43"
	OTHER BARS	43"	37"	33"
# 7	TOP BARS	81"	70"	63"
	OTHER BARS	63"	54"	49"
# 8	TOP BARS	93"	80"	72"
	OTHER BARS	72"	62"	55"
# 9	TOP BARS	105"	91"	81"
	OTHER BARS	81"	70"	63"
# 10	TOP BARS	118"	102"	91"
	OTHER BARS	91"	79"	70"

NOTES:
1. BASED ON NORMAL WEIGHT CONCRETE & GRADE 60 REINFORCING BARS.
2. TOP BARS ARE HORIZONTAL BARS WITH MORE THAN 12 INCHES OF CONCRETE CAST BELOW THE BARS.
3. FOR LIGHTWEIGHT AGGREGATE, MULTIPLY ABOVE VALUES BY 1.3.

CONCRETE BEAM TENSION LAP SPLICE SCHEDULE

MASONRY REINF. LAP SCHEDULE	
BAR SIZE	LAP LENGTH
#3 BAR	18"
#4 BAR	24"
#5 BAR	30"
#6 BAR	36"
#7 BAR	42"

NOTE:
1. LAPS BASED ON 48 BAR DIAMETERS
2. BAR STRESSES DO NOT EXCEED 80%

VERTICAL REINFORCEMENT BAR LAP SCHEDULE - MASONRY

VERTICAL REINFORCEMENT BAR LAP SCHEDULE			
BAR SIZE	CLASS "B" TENSION LAP		
	3,000 PSI	4,000 PSI	5,000 PSI
# 5	36"	31"	28"
# 6	43"	37"	33"
# 7	63"	54"	49"
# 8	72"	62"	55"
# 9	81"	70"	63"
# 10	91"	79"	70"

NOTES:
1. BASED ON NORMAL WEIGHT CONCRETE & GRADE 60 REINFORCING BARS.

VERTICAL REINFORCEMENT BAR LAP SCHEDULE - CONCRETE

Revisions	Date

CONSULTANT

Pennoni
5755 Rio Vista Drive
Clearwater, FL. 33760-3137
(727) 325-1241
Florida Coa 7819
Jeffrey J. Salemme, P.E.
Florida P.E. 44131
Pennoni Project No. RDCJP23010

This item has been electronically signed and sealed by Jeffrey J. Salemme using a Digital Signature and date. Printed copies of this document are not considered signed and sealed and the signature must be verified on any electronic copies.

ARCHITECT/ENGINEER OF RECORD

RDC◆JPA ARCHITECTURE

524 Fernwood Drive, Altamonte Springs, Florida 32701 | www.rdcjpa.com | 800.362.1523

STAMP

JEFFREY J. SALEMME LICENSE NO. 44131 STATE OF FLORIDA PROFESSIONAL ENGINEER

Office of Construction and Facilities Management

VA U.S. Department of Veterans Affairs

Drawing Title	WIND TABLES & SCHEDULES
Phase	BID DOCUMENTS
Approved:	STATION CHIEF - EDWIN BURNETT
	STRUCTURAL DOCUMENTS
Project Title	GAINESVILLE VAMC DATA CENTER & EHRM INFRASTRUCTURE UPGRADES DESIGN
Project Number	VA Project No. 573-21-106 RDC/JPA Project No. 23072.00
Building Number	N/A
Location	GAINESVILLE FL
Drawing Number	S002
Issue Date	04.20.2026
Checked	YY
Drawn	NM

VA FORM 08 - 6231

1/20/2026 7:40:28 AM

CONCRETE COLUMN SCHEDULE							
	DIMENSIONS		REINFORCING				
			LONGITUDINAL		TIES		
MARK	WIDTH	DEPTH	QUANTITY	SIZE	SIZE	SPACING	REMARKS
C824	8"	2' - 0"	4	6	3	8"	TYPE A
C832	8"	2' - 8"	4	6	3	8"	TYPE A

COLUMN FOOTING SCHEDULE								
	DIMENSIONS			REINFORCING				
				A - BARS		B - BARS		
MARK	WIDTH	LENGTH	DEPTH	QUANTITY	SIZE	QUANTITY	SIZE	REMARKS
F60	6' - 0"	6' - 0"	1' - 2"	7	5	7	5	
F70	7' - 0"	7' - 0"	1' - 5"	6	6	6	6	
F6080	6' - 0"	8' - 0"	1' - 2"	7	5	9	5	

WALL FOOTING SCHEDULE							
	DIMENSIONS		REINFORCING				
			LONGITUDINAL		TRANSVERSE		
MARK	WIDTH	DEPTH	QUANTITY	SIZE	SIZE	SPACING	NOTES
F20W	2' - 0"	1' - 0"	3	5	5	1' - 0"	
F30W	3' - 0"	1' - 0"	3	5	5	1' - 0"	
F40WA	4' - 0"	1' - 2"	5	4	4	1' - 0"	TOP & BOTTOM
F40WB	4' - 0"	1' - 4"	5	6	6	1' - 0"	TOP & BOTTOM

FOUNDATION PLAN NOTES:

1. TOP OF SLAB ELEVATION: 91'- 8" (0'- 0")
   TOP OF FOOTING ELEVATION: 89'- 8" (U.N.O.)
2. INTERIOR SLAB ON GRADE TO BE 4" THICK 3000 PSI CONC. REINFORCED W/ MACRO SYNTHETIC FIBERS OVER 10 MIL VAPOR RETARDER. C.J. INDICATES SLAB CONTRACTION JOINT. SEE 1 & 2 S501 U.N.O.
3. WALLS & COLUMNS SHALL BE CENTERED ON FOOTINGS U.N.O.
4. ALL SPREAD FOOTING TO BE F20W U.N.O.
   FOOTING REINFORCING TO BE BOT. BARS U.N.O.
5. ⊙ ✕ ⊡ INDICATES 8" NOMINAL MASONRY WALLS, AS SHOWN ON PLAN, REINFORCED W/ #6 @ 16" O.C. VERT. BARS IN FULLY GROUTED CELLS W/ REINFORCED BOND BEAMS @ 48" O.C. & DUR-O-WALL @ 16" O.C. HORIZONTAL REINF. PROVIDE (2) #6 VERT. @ SIDES OF OPENINGS, @ WALL ENDS & AT WALL INTERSECTIONS.
6. REFER TO SHEETS S001 & S002 FOR SPECIFICATIONS & SCHEDULES.
7. COORDINATE ALL DIMENSIONS, ELEVATIONS, SLOPES, RECESSES & SLAB EDGES W/ ARCHITECTURAL DWGS.
8. REFER TO S501 FOR FOUNDATION DETAILS.
9. VERIFY ALL DIMENSIONS W/ ARCHITECTURAL DRAWINGS PRIOR TO FABRICATION AND CONSTRUCTION.
10. VERIFY FOUNDATION ELEVATIONS W/ CIVIL & FIELD CONDITIONS. MAINTAIN 12" SOIL COVER ON TOP OF FOUNDATION. STEP FOOTING AS REQUIRED PER 9/S501
11. SEE ARCH. FOR ALL DOOR & WINDOW OPENING SIZES & LOCATION.
12. SOIL SHALL BE TREATED WITH TERMITE PROTECTION AS REQUIRED BY THE CURRENT FLORIDA BUILDING CODE.
13. ⊹ ——— M.C.J. INDICATES MASONRY CONTROL JOINTS. SPACE @ 26'-0" O.C. MAX. AT EXTERIOR WALLS. SEE ARCH FOR LOCATION.

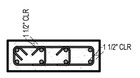

TYPE A

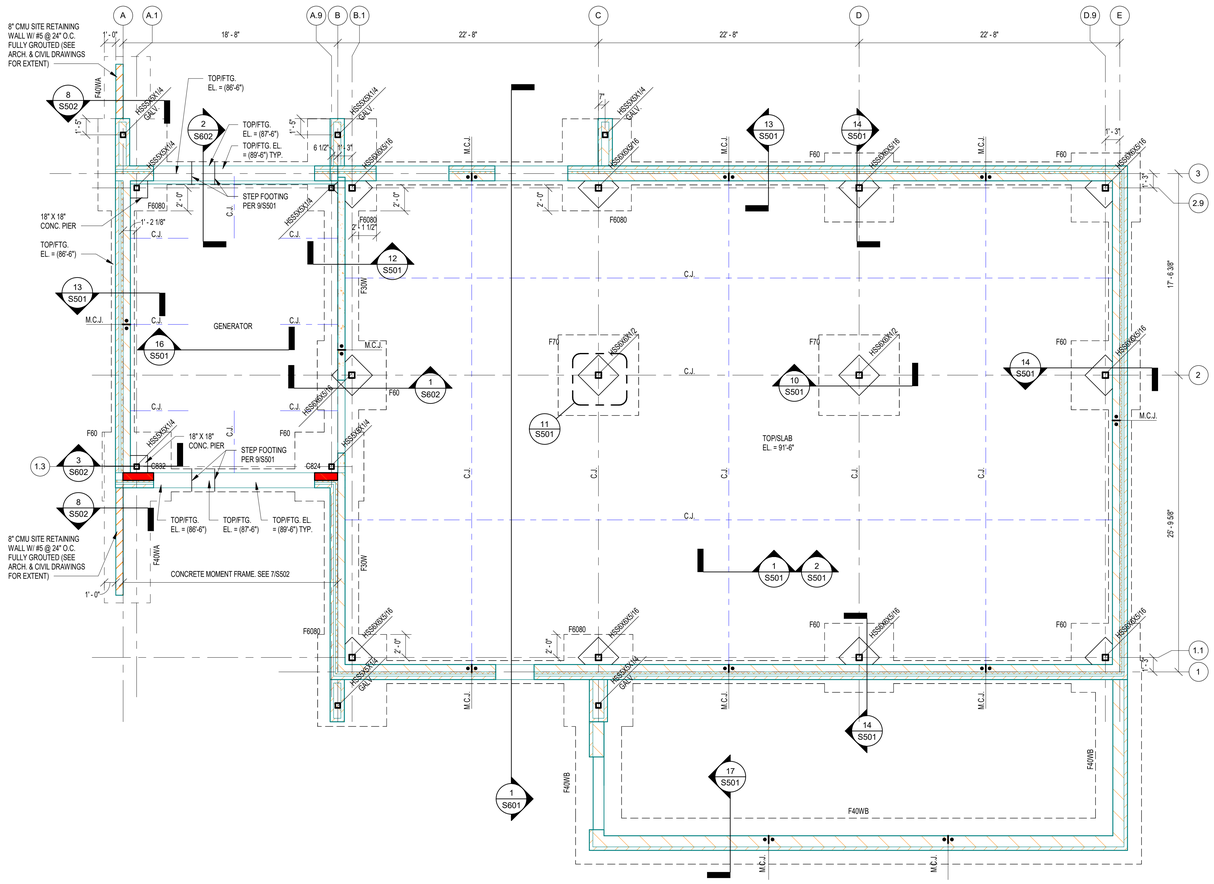

1 FOUNDATION PLAN

3/16" = 1'-0"

1/20/2026 7:40:30 AM

Revisions	Date

CONSULTANT

Pennoni
5755 Rio Vista Drive
Clearwater, FL. 33760-3137
(727) 325-1241
Florida Coa 7819
Jeffrey J. Salemme, P.E.
Florida P.E. 44131
Pennoni Project No. RDCJP23010

This item has been electronically signed and sealed by Jeffrey J. Salemme using a Digital Signature and date. Printed copies of this document are not considered signed and sealed and the signature must be verified on any electronic copies.

ARCHITECT/ENGINEER OF RECORD

RDC◆JPA ARCHITECTURE

524 Fernwood Drive, Altamonte Springs, Florida 32701 | www.rdcjpa.com | 800.362.1523

STAMP

JEFFREY J. SALEMME LICENSE NO. 44131 STATE OF FLORIDA PROFESSIONAL ENGINEER

Office of Construction and Facilities Management

VA U.S. Department of Veterans Affairs

Drawing Title: FOUNDATION PLAN	Phase: BID DOCUMENTS	Project Title: GAINESVILLE VAMC DATA CENTER & EHRM INFRASTRUCTURE UPGRADES DESIGN	Project Number: VA Project No. 573-21-106; RDC/JPA Project No. 23072.00
Approved: STATION CHIEF - EDWIN BURNETT	STRUCTURAL DOCUMENTS	Location: GAINESVILLE FL	Building Number: N/A
		Issue Date: 04.20.2026 / Checked: YY / Drawn: NM	Drawing Number: S100

VA FORM 08 - 6231

CONCRETE BEAM SCHEDULE									
	DIMENSIONS		REINFORCING						
			TOP BARS		BOTTOM BARS		STIRRUPS		
MARK	WIDTH	DEPTH	QUANTITY	SIZE	QUANTITY	SIZE	SIZE	SPACING	REMARKS
CB832	8"	32"	2	5	2	5	3	1'- 0"	TYPE A
CB856	8"	56"	2	5	2	5	3	1'- 0"	TYPE B

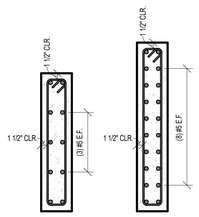

TYPE A TYPE B

ROOF BEAM REACTION TABLE		
ID	SIZE	RXN (KIP)
1	W8x21	18.2
2	W12x30	26.8
3	W16x31	26.2
4	W16x50	64.6
5	W16x36	38.5
6	W16x36	33.4

NOTES: ALL FORCES ARE FACTORED LOADS FOR LFRD.

ROOF FRAMING PLAN NOTES:

1. ROOF FRAMING TO BE STEEL BEAMS EQUALLY SPACED BETWEEN GIRDER AS SHOWN, NOT TO EXCEED 7'-6" O.C. MAX. SPACING U.N.O.
2. TOP OF STEEL BEAM EL.= (HI ROOF): 109' - 6" (+18'-0) AT LOW POINT U.N.O.
   TOP OF STEEL BEAM EL.= (LO ROOF): 103' - 6" (+12'-0) AT LOW POINT U.N.O.
   NOTE: STEEL BEAM BEARING ELEVATIONS VARIES W/ ROOF SLOPE. COORDINATE W/ ARCH. FOR ROOF SLOPES.
3. MAIN ROOF SLOPE TO BE 1/4" PER FOOT MIN. SEE ARCH. FOR ROOF SLOPES.
4. ADD # 4T x 5'-0" TOP BARS @ 12" O.C. OVER ALL INTERIOR WALLS & GIRDERS.
5. REFER TO SHEETS S001 & S002 FOR SPECIFICATIONS & SCHEDULES.
6. VERIFY ALL DIM'S W/ ARCH. BEFORE CONSTRUCTION STARTS.
7. SEE DETAILS ON S510 FOR TYP. STUD PLACEMENTS
8. ROOF SLAB TO BE 5 1/4" 3000 PSI LIGHT WEIGHT STRUCTURAL CONCRETE (118 PCF) ON 2" (18 GA.) VLI COMPOSITE METAL DECK. (TOTAL THICKNESS= 5 1/4") U.N.O. SLAB TO BE REINFORCED WITH 6x6-W2.1xW2.1 W.W.F.
   (⟷) INDICATES DECK SPAN DIRECTION. INSTALL DECK IN 3-SPAN (MIN.)
   USE (6) 5/8" DIA. PUDDLE WELDS AT BEAM FOR SUPPORT FASTENING.
9. [ ] INDICATES MEP OPENING.SEE MEP DRAWINGS FOR ALL ROOF PENETRATIONS. SEE S510 FOR ADDITIONAL REINFORCING AROUND OPENINGS.
   PROVIDE MISCHELLANEOUS STEEL ANGLES L6x6x3/8 REQUIRED TO FRAME AROUND THESE OPENINGS.
10. [#] REFER TO TABLE ON THIS PAGE.
    ULTIMATE BEAM REACTIONS GIVEN ARE THE GREATER OF THOSE CALCULATED FROM DEAD, LIVE & WIND LOADS AND THE EQUIVALENT STATIC REQUIRED CONNECTION CAPACITY FOR BLAST LOADING. THE STEEL SUBCONTRACTOR SHALL BE RESPONSIBLE FOR DESIGNING THE CONNECTIONS USING THE ULTIMATE STRENGTH LOADS PROVIDED IN THE TABLE.
11. ALL BEAM-TO-BEAM CONNECTIONS SHALL BE DOUBLE ANGLE CONNECTIONS. ROOF BEAM AND GIRDER CONNECTIONS SHALL BE DESIGNED TO MEET THE REQUIREMENTS OF ASCE59-11 CHAPTER 9.
12. (+) INDICATES TOP OF STEEL BEAM ELEVATION.

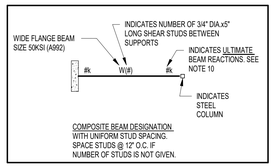

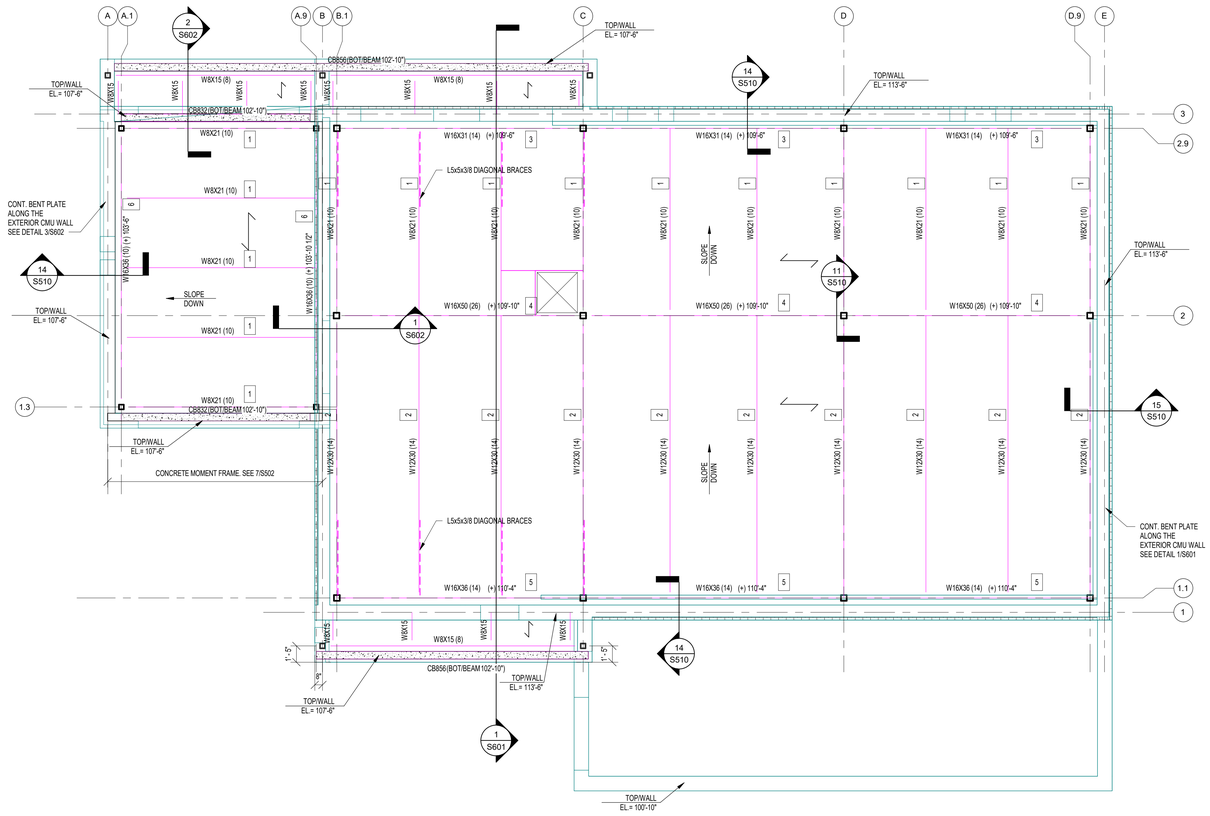

1 ROOF FRAMING PLAN

3/16" = 1'-0"

Revisions		Date

CONSULTANT

Pennoni
5755 Rio Vista Drive
Clearwater, FL 33760-3137
(727) 325-1241
Florida Coa 7819
Jeffrey J. Salemme, P.E.
Florida P.E. 44131
Pennoni Project No. RDCJP23010

This item has been electronically signed and sealed by Jeffrey J. Salemme using a Digital Signature and date. Printed copies of this document are not considered signed and sealed and the signature must be verified on any electronic copies.

ARCHITECT/ENGINEER OF RECORD

RDC◆JPA ARCHITECTURE
524 Fernwood Drive, Altamonte Springs, Florida 32701 | www.rdcjpa.com | 800.362.1523

STAMP

JEFFREY J. SALEMME LICENSE NO. 44131 STATE OF FLORIDA PROFESSIONAL ENGINEER

Office of Construction and Facilities Management

VA U.S. Department of Veterans Affairs

Drawing Title ROOF FRAMING PLAN	**Phase** BID DOCUMENTS	**Project Title** GAINESVILLE VAMC DATA CENTER & EHRM INFRASTRUCTURE UPGRADES DESIGN	**Project Number** VA Project No. 573-21-106 RDCJPA Project No. 23072.00
Approved: STATION CHIEF - EDWIN BURNETT	STRUCTURAL DOCUMENTS	**Location** GAINESVILLE FL	**Building Number** N/A
		Issue Date 04.20.2026 / **Checked** YY / **Drawn** NM	**Drawing Number** S102

1/20/2026 7:40:31 AM

VA FORM 08 - 6231

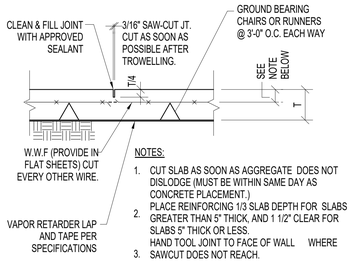

1 CONTRACTION JOINT W WWF
3/4" = 1'-0"

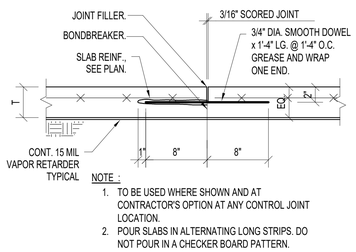

2 CONSTRUCTION JOINT
3/4" = 1'-0"

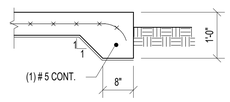

3 THICKENED SLAB EDGE
3/4" = 1'-0"

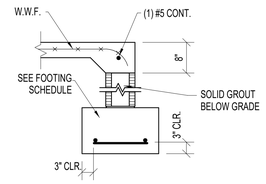

5 THICKENED SLAB EDGE
3/4" = 1'-0"

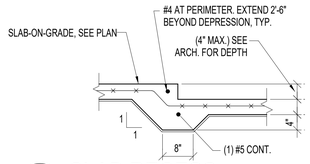

4 SLAB RECESS
3/4" = 1'-0"

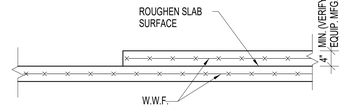

6 TYP. HOUSEKEEPING PAD
3/4" = 1'-0"

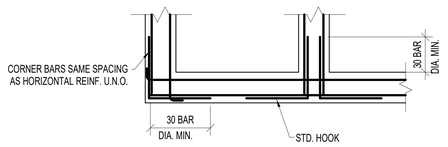

7 TYP. WALL AND FOOTING REINF. INTERSECTIONS
3/4" = 1'-0"

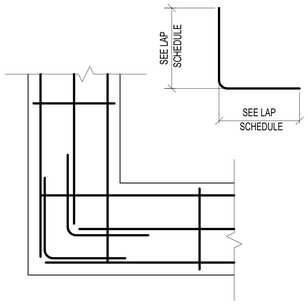

8 CORNER BAR DETAIL AT FOUNDATION
3/4" = 1'-0"

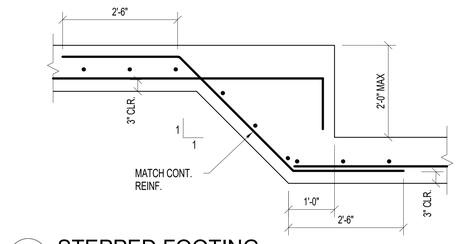

9 STEPPED FOOTING
3/4" = 1'-0"

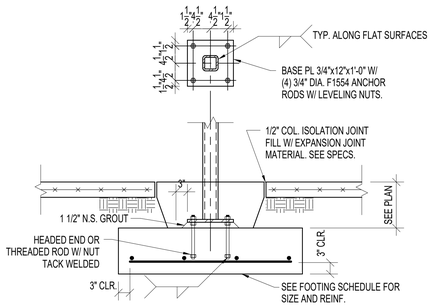

10 COLUMN FOOTING
3/4" = 1'-0"

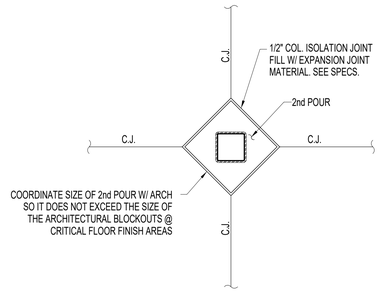

11 COL. ISOLATION JOINT
3/4" = 1'-0"

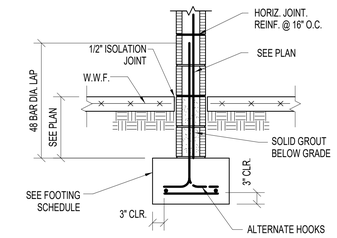

12 INTERIOR WALL FOOTING
3/4" = 1'-0"

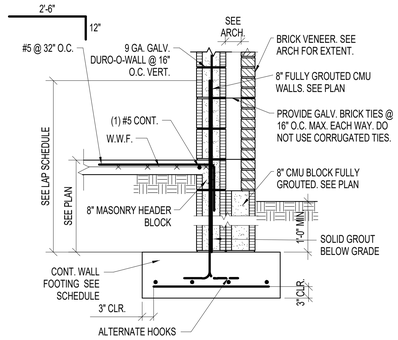

13 WALL FOOTING
3/4" = 1'-0"

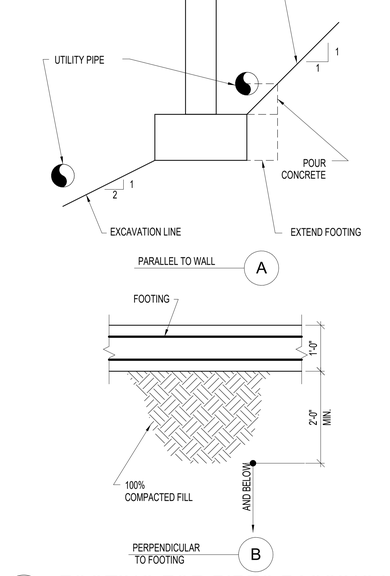

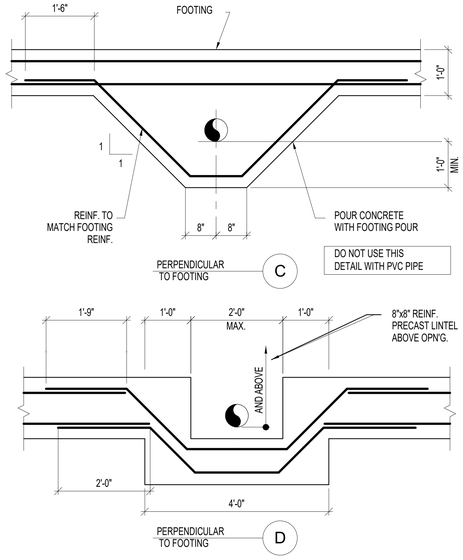

15 FOOTING FOR PIPES PASSING UNDER OR ADJACENT TO WALLS
3/4" = 1'-0"

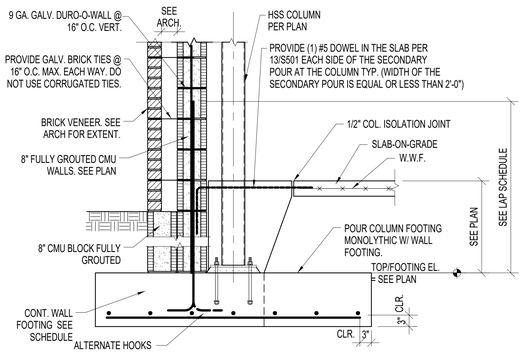

14 WALL FOOTING
3/4" = 1'-0"

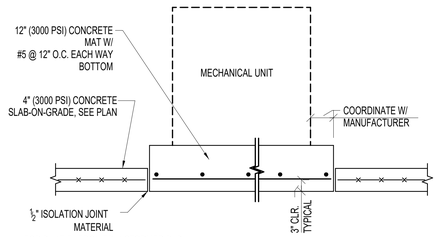

16 EQUIPMENT PAD-EXTERIOR
3/4" = 1'-0"

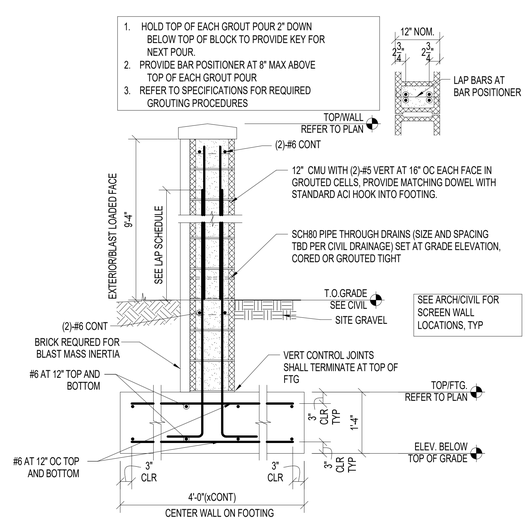

17 CMU SCREEN WALL-W2
3/4" = 1'-0"

1/20/2026 7:40:32 AM

Revisions	Date
1	

CONSULTANT

Pennoni
5755 Rio Vista Drive
Clearwater, FL 33760-3137
(727) 325-1241
Florida Coa 7819
Jeffrey J. Salemme, P.E.
Florida P.E. 44131
Pennoni Project No. RDCJP23010

This item has been electronically signed and sealed by Jeffrey J. Salemme using a Digital Signature and date. Printed copies of this document are not considered signed and sealed and the signature must be verified on any electronic copies.

ARCHITECT/ENGINEER OF RECORD

RDC◆JPA ARCHITECTURE

524 Fernwood Drive, Altamonte Springs, Florida 32701 | www.rdcjpa.com | 800.362.1523

STAMP

JEFFREY J. SALEMME LICENSE NO. 44131 STATE OF FLORIDA PROFESSIONAL ENGINEER

Office of Construction and Facilities Management

VA U.S. Department of Veterans Affairs

Drawing Title	FOUNDATION DETAILS
Phase	BID DOCUMENTS
Approved:	STATION CHIEF - EDWIN BURNETT
	STRUCTURAL DOCUMENTS

Project Title	GAINESVILLE VAMC DATA CENTER & EHRM INFRASTRUCTURE UPGRADES DESIGN
Project Number	VA Project No. 573-21-106 RDCJPA Project No. 23072.00
Building Number	N/A
Location	GAINESVILLE FL
Drawing Number	S501
Issue Date	04.20.2026
Checked	YY
Drawn	NM

VA FORM 08 - 6231

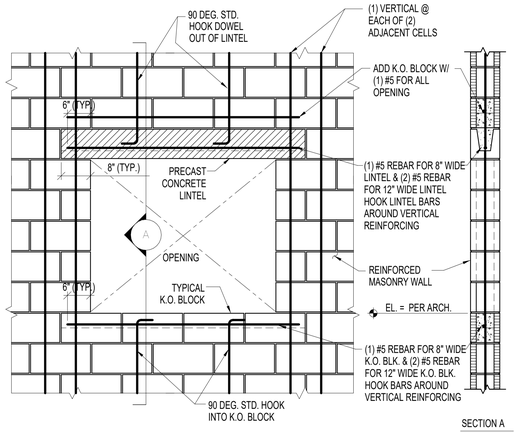

1 TYPICAL CONCRETE LINTEL REINFORCING DETAIL

3/4" = 1'-0"

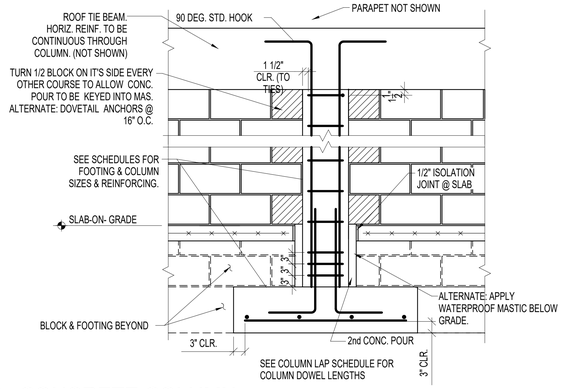

2 CONCRETE COLUMN DETAIL

3/4" = 1'-0"

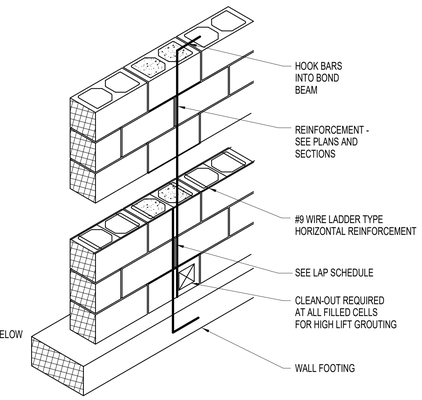

3 WALL REINFORCING

3/4" = 1'-0"

LOW LIFT GROUTING PROCEDURE:

1. CONSTRUCT WALL TO HEIGHT OF 4'-0" TO 5'-4" MAX. ALLOW MORTAR TO SET SUFFICIENTLY TO WITHSTAND GROUT PRESSURE.
2. VERTICAL WALL REINF. BARS TO EXTEND BEYOND HEIGHT OF WALL FOR PROPER LAP.
3. INSPECT UNITS FOR ALIGNMENT, CLEAN OUT CELLS TO BE FILLED.
4. FILL CELLS TO 5 FOOT MAX. GROUT POUR..
5. DELAY 3 TO 5 MINUTES PRIOR TO CONSOLIDATING TO ALLOW WATER TO BE ABSORBED BY MASONRY.

HIGH LIFT GROUTING PROCEDURE:

1. CONSTRUCT WALL TO FULL HEIGHT (24 FEET MAX.) WITH PROPER REINFORCING AND ALLOW MASONRY TO CURE AT LEAST 3 DAYS.
2. CLEAN CELLS, WHICH ARE TO BE GROUTED THROUGH CLEAN-OUT PORTS.
3. PLACE GROUT IN 4 FOOT, 5 FOOT MAX. LIFTS AND CONSOLIDATE AFTER EXCESS MOISTURE HAS BEEN ABSORBED BY MASONRY.
4. PLACE THE NEXT LIFT AS SOON AS POSSIBLE BUT NO LONGER THAN ONE HOUR LATER.

NOTES

1. EXTEND JOINT VERTICALLY FROM TOP OF FOOTING TO ROOF.
2. DISCONTINUE AT INTERMEDIATE TIE BEAMS AND ROOF TIE BEAMS.
3. SCORE ALL TIE BEAMS ON BOTH SIDES OF WALL TO MATCH JOINT.
4. SPACE JOINTS AT 26'-0" O.C. MAXIMUM.
5. COORDINATE LOCATIONS OF JOINTS WITH ARCH. JOINT LOCATIONS.

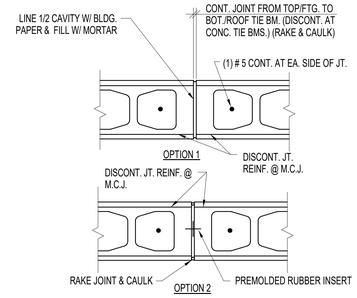

4 MASONRY CONTROL JOINT

3/4" = 1'-0"

5 MASONRY CONTROL JOINT ELEVATION

3/4" = 1'-0"

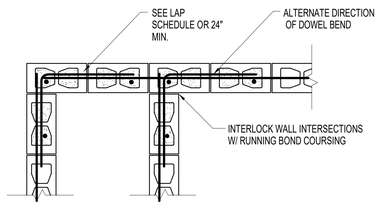

6 8" MASONRY BOND BEAM CONNECTION

3/4" = 1'-0"

7 TYP.CONCRETE FRAME SECTION

1/2" = 1'-0"

8 RETAINING WALL

3/4" = 1'-0"

Revisions	Date

CONSULTANT

Pennoni
5755 Rio Vista Drive
Clearwater, FL. 33760-3137
(727) 325-1241
Florida Coa 7816
Jeffrey J. Salemme, P.E.
Florida P.E. 44131
Pennoni Project No. RDCJP23010

This item has been electronically signed and sealed by Jeffrey J. Salemme using a Digital Signature and date. Printed copies of this document are not considered signed and sealed and the signature must be verified on any electronic copies.

ARCHITECT/ENGINEER OF RECORD

RDC◆JPA ARCHITECTURE

524 Fernwood Drive, Altamonte Springs, Florida 32701 | www.rdcjpa.com | 800.362.1523

STAMP

JEFFREY J. SALEMME LICENSE NO. 44131 STATE OF FLORIDA PROFESSIONAL ENGINEER

Office of Construction and Facilities Management

VA U.S. Department of Veterans Affairs

Drawing Title: MASONRY DETAILS	Phase: BID DOCUMENTS	Project Title: GAINESVILLE VAMC DATA CENTER & EHRM INFRASTRUCTURE UPGRADES DESIGN	Project Number: VA Project No. 573-21-106 RDC/JPA Project No. 23072.00
Approved: STATION CHIEF - EDWIN BURNETT	STRUCTURAL DOCUMENTS	Location: GAINESVILLE FL	Building Number: N/A
		Issue Date: 04.20.2026 / Checked: YY / Drawn: NM	Drawing Number: S502

1/20/2026 7:40:34 AM

VA FORM 08 - 6231

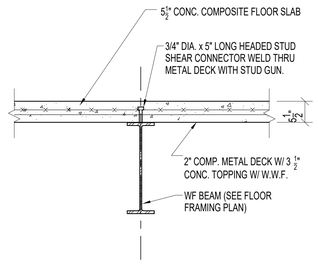

1 COMPOSITE BEAM
3/4" = 1'-0"

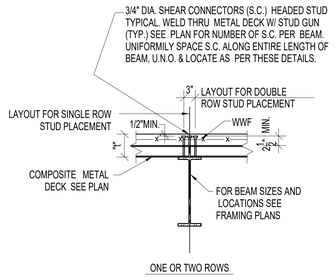

2 TYPICAL STUD PLACEMENT ON BEAMS
3/4" = 1'-0"

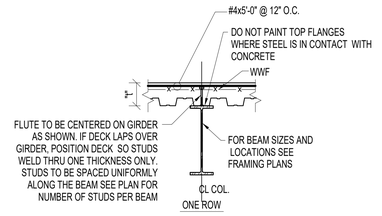

3 TYPICAL STUD PLACEMENT ON GIRDERS
3/4" = 1'-0"

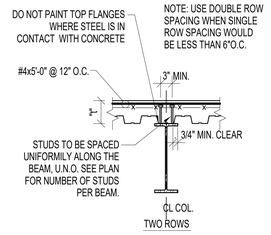

4 TYP. STUD PLACEMENT ON GIRDERS
3/4" = 1'-0"

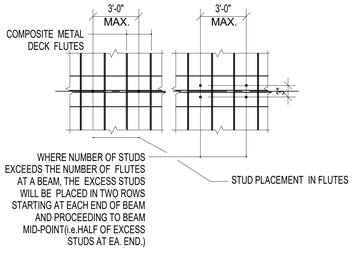

5 TYP. STUD PLACEMENT ON BEAMS
3/4" = 1'-0"

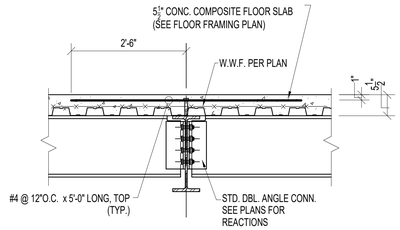

6 COMPOSITE GIRDER
3/4" = 1'-0"

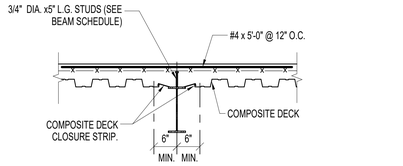

7 TYPICAL CLOSURE DETAIL
3/4" = 1'-0"

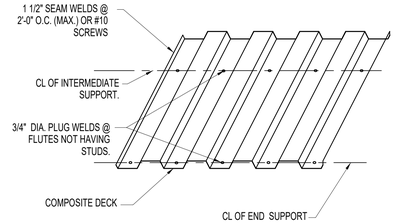

8 TYPICAL COMPOSITE DECK ATTACHMENT
3/4" = 1'-0"

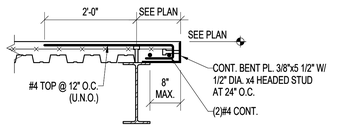

DECK PARALLEL

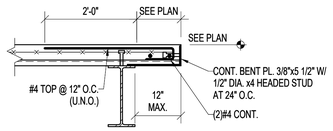

DECK PERPENDICULAR

9 TYPICAL SLAB EDGE SECTIONS
3/4" = 1'-0"

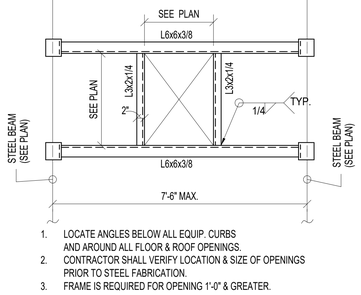

1. LOCATE ANGLES BELOW ALL EQUIP. CURBS AND AROUND ALL FLOOR & ROOF OPENINGS.
2. CONTRACTOR SHALL VERIFY LOCATION & SIZE OF OPENINGS PRIOR TO STEEL FABRICATION.
3. FRAME IS REQUIRED FOR OPENING 1'-0" & GREATER.

10 TYPICAL DETAIL FOR SUPPORT OF DECK AT DUCT OPENINGS BELOW ROOFTOP MECHANICAL UNITS
3/4" = 1'-0"

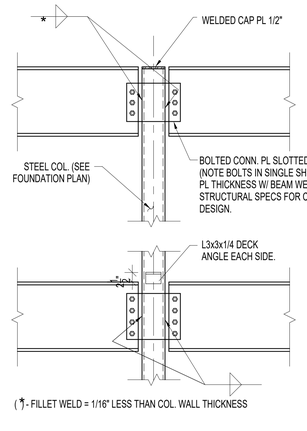

11 SECTION
3/4" = 1'-0"

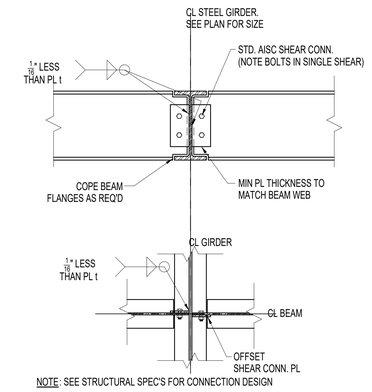

NOTE: SEE STRUCTURAL SPEC'S FOR CONNECTION DESIGN

12 BEAM TO GIRDER WEB CONNECTION
3/4" = 1'-0"

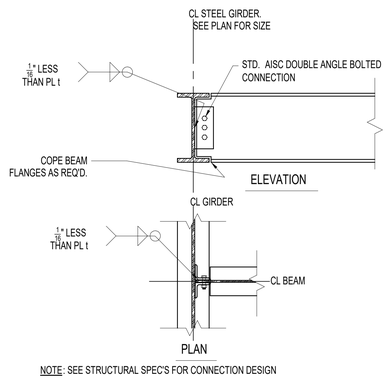

NOTE: SEE STRUCTURAL SPEC'S FOR CONNECTION DESIGN

13 BEAM TO GIRDER WEB CONNECTION
3/4" = 1'-0"

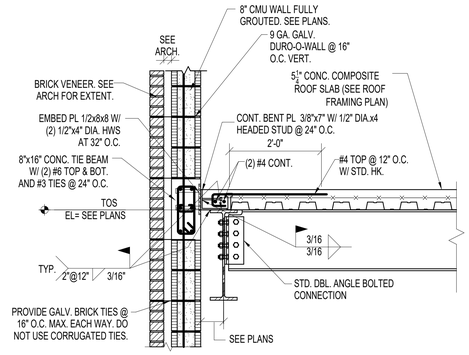

14 EDGE OF SLAB
3/4" = 1'-0"

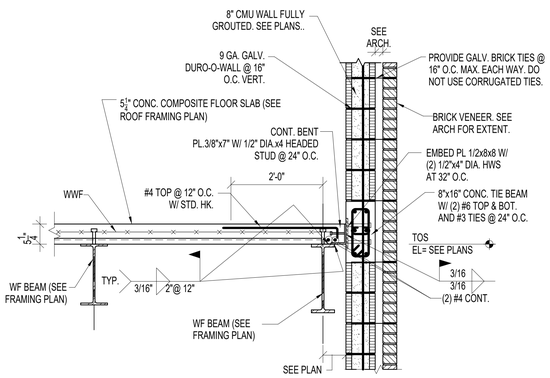

15 EDGE OF SLAB
3/4" = 1'-0"

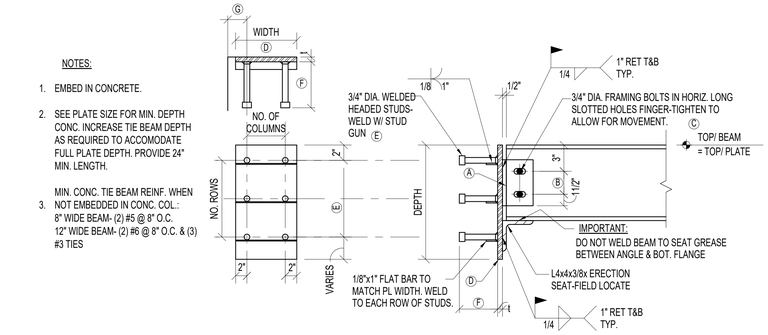

NOTES:

1. EMBED IN CONCRETE.
2. SEE PLATE SIZE FOR MIN. DEPTH CONC. INCREASE TIE BEAM DEPTH AS REQUIRED TO ACCOMODATE FULL PLATE DEPTH. PROVIDE 24" MIN. LENGTH.
3. MIN. CONC. TIE BEAM REINF. WHEN NOT EMBEDDED IN CONC. COL.: 8" WIDE BEAM- (2) #5 @ 8" O.C. 12" WIDE BEAM- (2) #6 @ 8" O.C. & (3) #3 TIES

EMBED PLATE SCHEDULE

BEAM SERIES	MAX REACT. (KIPS)	FRAMING ANGLES	NO. BOLTS	BOLT TYPE	PLATE SIZE (l x W x D)	NO. OF SHEAR STUDS			STUD LENGTH	MIN. EDGE DISTANCE
						COLUMNS	ROWS	TOTAL		
		A	B	C	D	E			F	G
W8	29K	(2) L4x4x3/8x6"	2@ 3" O.C.	A325-N	1/2x10x1'-1"	2@ 6" O.C.	2@ 5" O.C.	4	5"	2½"

16 BOLT CLUSTER DETAIL
3/4" = 1'-0"

Revisions	Date

CONSULTANT

Pennoni
5755 Rio Vista Drive
Clearwater, FL. 33760-3137
(727) 325-1241
Florida Coa 7819
Jeffrey J. Salemme, P.E.
Florida P.E. 44131
Pennoni Project No. RDCJP23010

This item has been electronically signed and sealed by Jeffrey J. Salemme using a Digital Signature and date. Printed copies of this document are not considered signed and sealed and the signature must be verified on any electronic copies.

ARCHITECT/ENGINEER OF RECORD

RDC◆JPA ARCHITECTURE
524 Fernwood Drive, Altamonte Springs, Florida 32701 | www.rdcjpa.com | 800.362.1523

STAMP

JEFFREY J. SALEMME LICENSE NO. 44131 STATE OF FLORIDA PROFESSIONAL ENGINEER

Office of Construction and Facilities Management

U.S. Department of Veterans Affairs

Drawing Title: FRAMING DETAILS	Phase: BID DOCUMENTS
Approved: STATION CHIEF - EDWIN BURNETT	STRUCTURAL DOCUMENTS
Project Title: GAINESVILLE VAMC DATA CENTER & EHRM INFRASTRUCTURE UPGRADES DESIGN	Project Number: VA Project No. 573-21-106 RDC/JPA Project No. 23072.00
	Building Number: N/A
Location: GAINESVILLE FL	Drawing Number: S510
Issue Date: 04.20.2026	Checked: YY
	Drawn: NM

VA FORM 08 - 6231

1/20/2026 7:40:35 AM

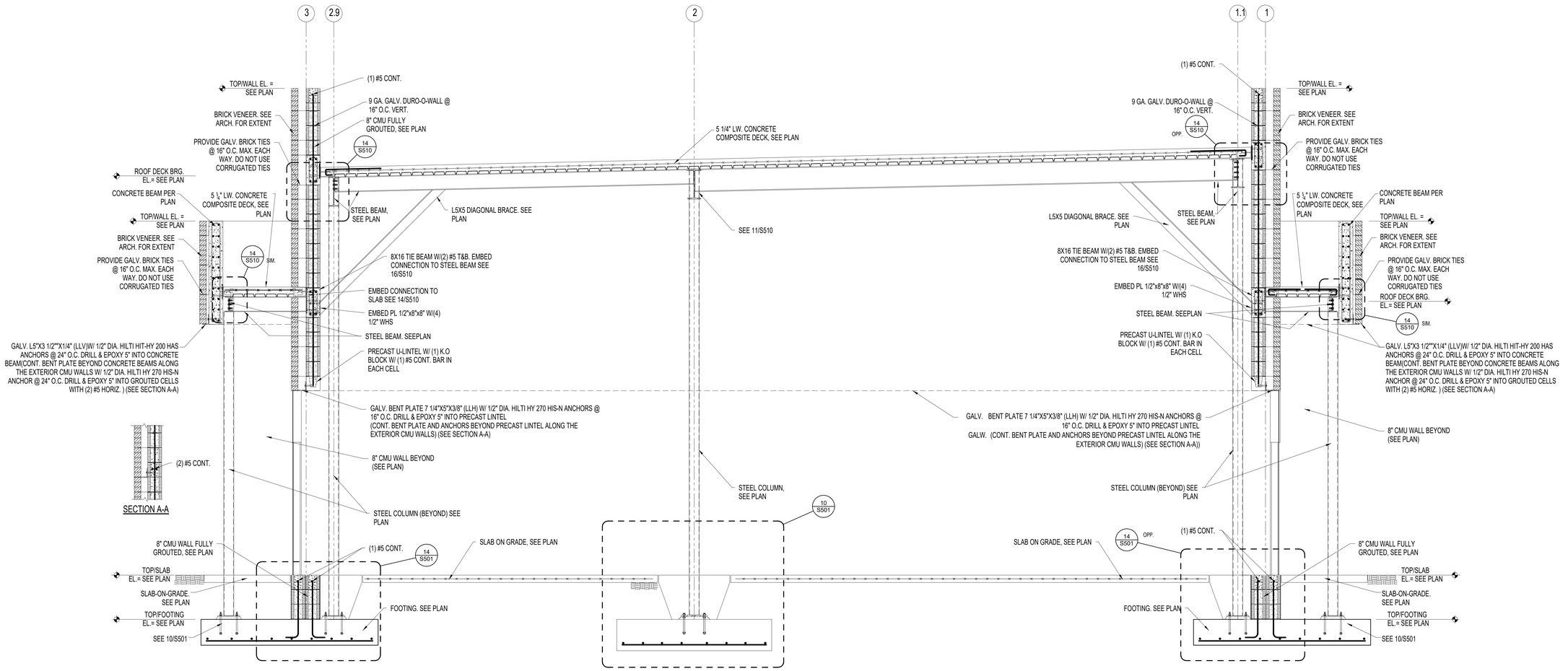

1 BUILDING SECTION

1/2" = 1'-0"

Revisions	Date

CONSULTANT

Pennoni
5755 Rio Vista Drive
Clearwater, FL 33760-3137
(727) 325-1241
Florida Coa 7819
Jeffrey J. Salemme, P.E.
Florida P.E. 44131
Pennoni Project No. RDCJP23010

This item has been electronically signed and sealed by Jeffrey J. Salemme using a Digital Signature and date. Printed copies of this document are not considered signed and sealed and the signature must be verified on any electronic copies.

ARCHITECT/ENGINEER OF RECORD

RDC◆JPA ARCHITECTURE
524 Fernwood Drive, Altamonte Springs, Florida 32701 | www.rdcjpa.com | 800.362.1523

STAMP

JEFFREY J. SALEMME LICENSE NO. 44131 STATE OF FLORIDA PROFESSIONAL ENGINEER

Office of Construction and Facilities Management

VA U.S. Department of Veterans Affairs

Drawing Title	BUILDING SECTION
Approved:	STATION CHIEF - EDWIN BURNETT
Phase	BID DOCUMENTS
	STRUCTURAL DOCUMENTS
Project Title	GAINESVILLE VAMC DATA CENTER & EHRM INFRASTRUCTURE UPGRADES DESIGN
Location	GAINESVILLE FL
Issue Date	04.20.2026
Checked	YY
Drawn	NM
Project Number	VA Project No. 573-21-106 RDCJPA Project No. 23072.00
Building Number	N/A
Drawing Number	S601

1/20/2026 7:40:36 AM

VA FORM 08 - 6231

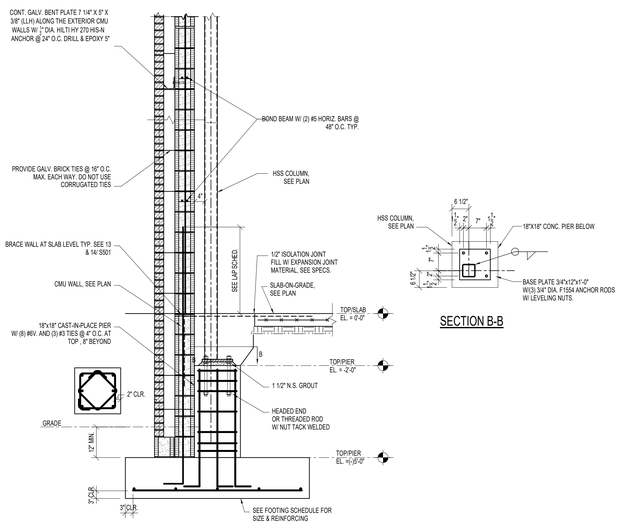

3 WALL SECTION

1/2" = 1'-0"

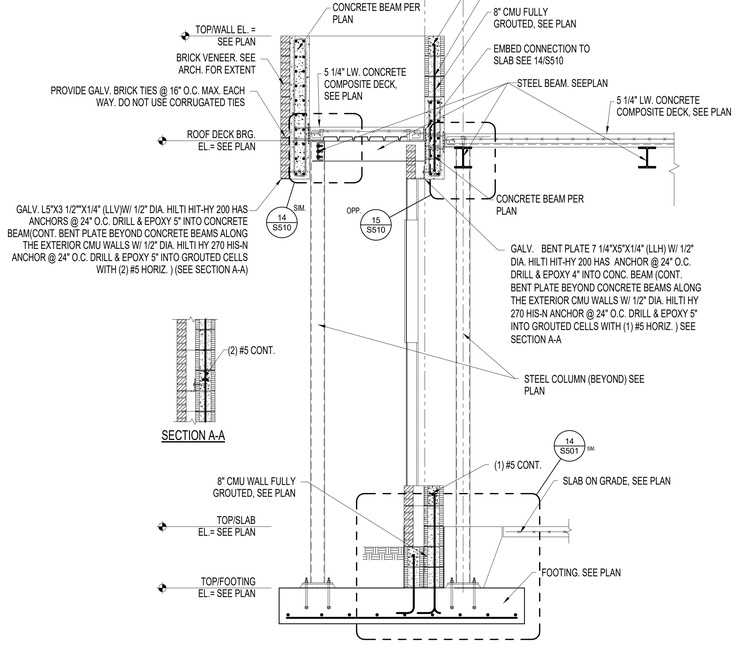

2 WALL SECTION

1/2" = 1'-0"

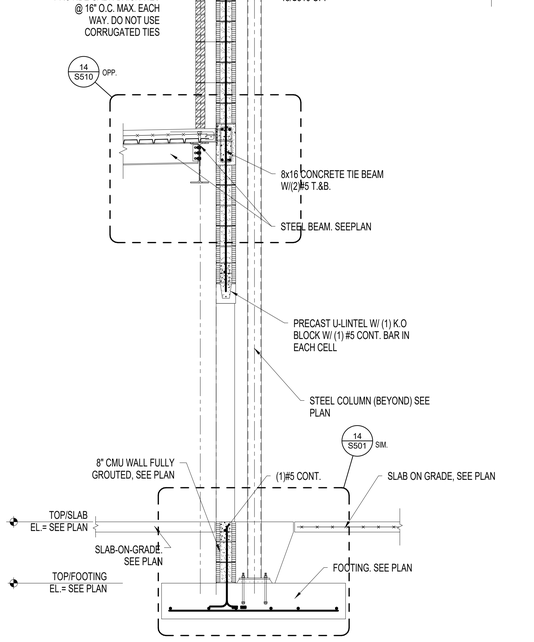

1 WALL SECTION

1/2" = 1'-0"

1/20/2026 7:40:37 AM

Revisions	Date

CONSULTANT

Pennoni
5755 Rio Vista Drive
Clearwater, FL 33760-3137
(727) 325-1241
Florida Coa 7819
Jeffrey J. Salemme, P.E.
Florida P.E. 44131
Pennoni Project No. RDCJP23010

This item has been electronically signed and sealed by Jeffrey J. Salemme using a Digital Signature and date. Printed copies of this document are not considered signed and sealed and the signature must be verified on any electronic copies.

ARCHITECT/ENGINEER OF RECORD

RDC◆JPA ARCHITECTURE
524 Fernwood Drive, Altamonte Springs, Florida 32701 | www.rdcjpa.com | 800.362.1523

STAMP

JEFFREY J. SALEMME LICENSE NO. 44131 STATE OF FLORIDA PROFESSIONAL ENGINEER

Office of Construction and Facilities Management

VA U.S. Department of Veterans Affairs

Drawing Title: WALL SECTIONS

Phase: BID DOCUMENTS

Project Title: GAINESVILLE VAMC DATA CENTER & EHRM INFRASTRUCTURE UPGRADES DESIGN

Project Number: VA Project No. 573-21-106 RDCJJPA Project No. 23072.00

Building Number: N/A

Approved: STATION CHIEF - EDWIN BURNETT

Location: GAINESVILLE FL

Drawing Number: S602

Issue Date: 04.20.2026 | **Checked:** YY | **Drawn:** NM

VA FORM 08 - 6231

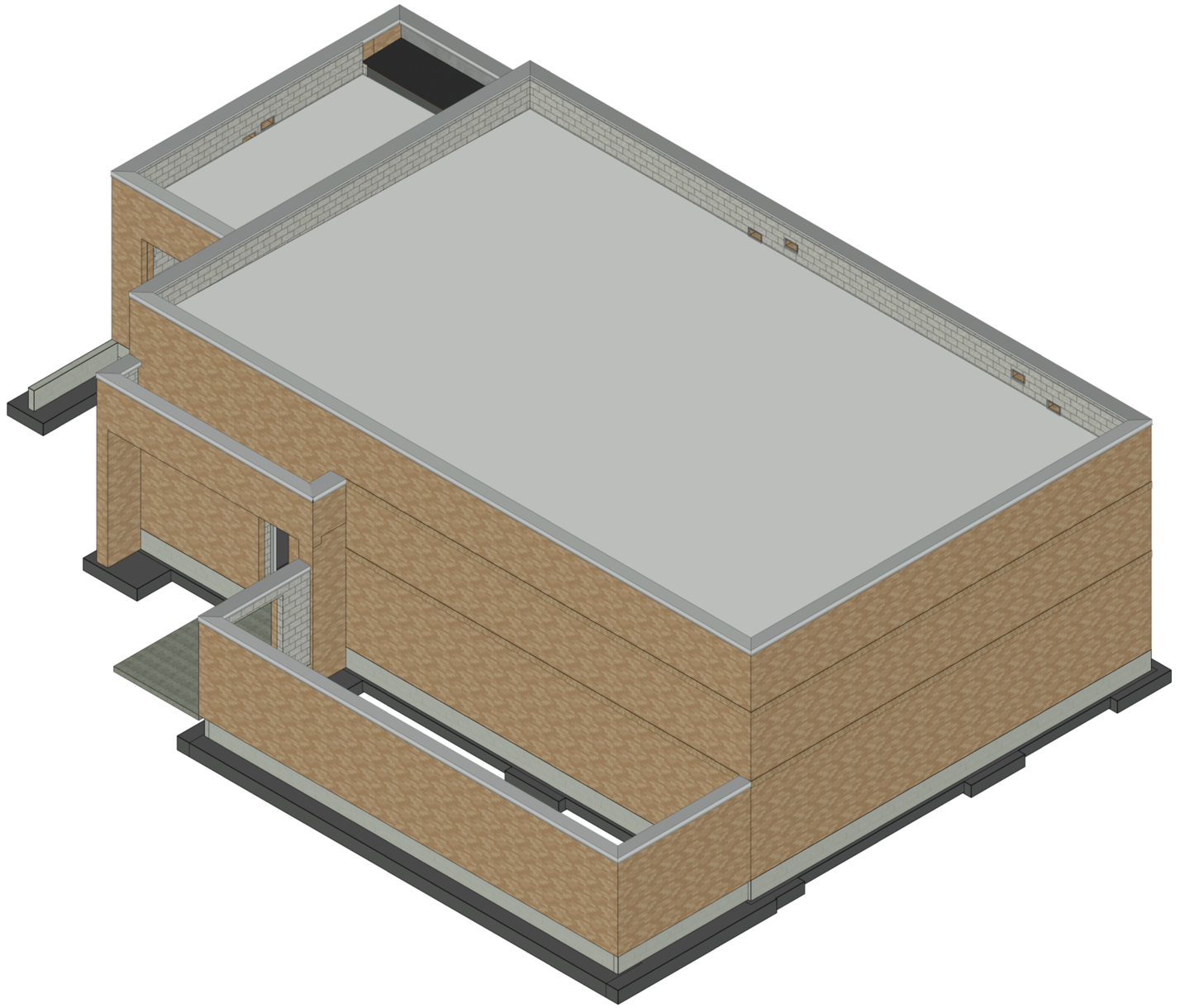

NOTES:

1. SLABS NOT SHOWN FOR CLARITY.
2. 3D VIEW SHOWN TO PROVIDE ADDITIONAL CLARITY FOR GENERAL ARRANGEMENT OF STRUCTURE.

1/26/2026 7:40:46 AM

Revisions	Date

CONSULTANT

Pennoni
5755 Rio Vista Drive
Clearwater, FL 33760-3137
(727) 325-1241
Florida Coa 7819
Jeffrey J. Salemme, P.E.
Florida P.E. 44131
Pennoni Project No. RDCJP23010

This item has been electronically signed and sealed by Jeffrey J. Salemme using a Digital Signature and date. Printed copies of this document are not considered signed and sealed and the signature must be verified on any electronic copies.

ARCHITECT/ENGINEER OF RECORD

RDC◆JPA
ARCHITECTURE
524 Fernwood Drive, Altamonte Springs, Florida 32701 | www.rdcjpa.com | 800.362.1523

STAMP

JEFFREY J. SALEMME LICENSE NO. 44131 STATE OF FLORIDA PROFESSIONAL ENGINEER

Office of Construction and Facilities Management

VA U.S. Department of Veterans Affairs

Drawing Title: ISOMETRIC VIEW	Phase: BID DOCUMENTS	Project Title: GAINESVILLE VAMC DATA CENTER & EHRM INFRASTRUCTURE UPGRADES DESIGN	Project Number: VA Project No. 573-21-106; RDCJPA Project No. 23072.00
Approved: STATION CHIEF - EDWIN BURNETT	STRUCTURAL DOCUMENTS	Location: GAINESVILLE FL	Building Number: N/A
		Issue Date: 04.20.2026 / Checked: YY / Drawn: NM	Drawing Number: S701

VA FORM 08 - 6231

SHEET LIST

SHEET NUMBER	SHEET NAME	
FA001	FIRE ALARM LEGENDS & SYMBOLS	
FA101	FIRE ALARM FLOOR PLAN - DATA CENTER	

ELECTRONIC SAFETY AND SECURITY SYMBOLS

SYMBOL	DESCRIPTION
FACP	ALARM, FIRE, PANEL; LETTERS INDICATE AS FOLLOWS: FACP = CONTROL PANEL
	ALARM, SPEAKER/LIGHT, ONE ASSEMBLY, ADJUSTABLE 15CD, 30CD, 75CD UNLESS OTHERWISE NOTED
FS	ALARM, FLOW SWITCH
TS	ALARM, TAMPER SWITCH
SD	DETECTOR, SMOKE
	DETECTOR, SMOKE, FOR DUCT
P	FIRE ALARM STATION, MANUAL PULL

FIRE ALARM ABBREVIATIONS

ABBR.	DESCRIPTION	ABBR.	DESCRIPTION	ABBR.	DESCRIPTION
1PH	SINGLE-PHASE	DB	DECIBEL OR DIRECT BURIAL	OC	ON CENTER
1P	SINGLE POLE	DC	DIRECT CURRENT	OD	OUTSIDE DIAMETER
2/C	TWO-CONDUCTOR	DEG C	DEGREES CELSIUS		
3/C	THREE-CONDUCTOR	DEG F	DEGREES FAHRENHEIT	P	POLE
3PH	THREE-PHASE	DEMO	DEMOLITION	PA	PUBLIC ADDRESS
4/C	FOUR-CONDUCTOR	DIAG	DIAGRAM	PB	PANELBOARD, PULL BOX, OR PUSHBUTTON
4W	FOUR-WIRE	DISTR	DISTRIBUTION	PBPU	PREFABRICATED BEDSIDE PATIENT UNIT
		DN	DOWN	PED	PEDESTAL
A/C UNIT	AIR CONDITIONING UNIT	DRSW	DOOR SWITCH	PEND	PENDANT
A/E	ARCHITECT/ENGINEER	DWG	DRAWING	PF	POWER FACTOR
AAP	ALARM ANNUNCIATOR PANEL			PH	PHASE
AC	ALTERNATING CURRENT OR ARMORED CABLE	EC	EMPTY CONDUIT	PNL	PANEL
ACC	ACCESSIBLE	EG	EQUIPMENT GROUND	PVC	POLYVINYL CHLORIDE (PLASTIC)
ADDL	ADDITIONAL	EL	ELEVATION	PWR	POWER
ADJ	ADJACENT, ADJOINING	ELEC	ELECTRIC OR ELECTRICAL		
ADO	AUTOMATIC DOOR OPENER	ELEV	ELEVATOR	RCP	REFLECTED CEILING PLAN
AFC	ABOVE FINISHED COUNTER	EMER	EMERGENCY	REC	RECESSED
AFF	ABOVE FINISHED FLOOR	EMI	ELECTROMAGNETIC INTERFERENCE	RECPT	RECEPTACLE
AFG	ABOVE FINISHED GRADE	EMT	ELECTRICAL METALLIC TUBING	RGS	RIGID GALVANIZED STEEL
AHJ	AUTHORITY HAVING JURISDICTION	ENCL	ENCLOSURE	RM	ROOM
ALT	ALTERNATE	EPO	EMERGENCY POWER OFF	REQD	REQUIRED
AMB OR A	AMBIENT	ESMT	EASEMENT		
ARCH	ARCHITECT	EXIST	EXISTING	SF	SQUARE FOOT (FEET)
ATS	AUTOMATIC TRANSFER SWITCH			SHT	SHEET
AUTO	AUTOMATIC	FLEX	FLEXIBLE METALLIC CONDUIT	SI	INTERNATIONAL SYSTEM OF UNITS
AV	AUDIO VISUAL	FOUTT	TELEPHONE FLOOR OUTLET	SPEC	SPECIFICATION
		FP	FIRE PROTECTION	SURF	SURFACE
BAT	BATTERY	FT	FEET OR FOOT	SW	SWITCH
BC	BARE COPPER	FU SW	FUSED SWITCH		
BD	BOARD			TEL	TELEPHONE
BFF	BELOW FINISH FLOOR	G OR GND	GROUND OR GENERATOR	TP	TWISTED PAIR
BLDG	BUILDING	GEN	GENERATOR	TPS	TWISTED PAIR SHIELDED
BPIP	BOILER PLANT INSTRUMENTATION PANEL	GTB	GROUND TERMINAL BOX	TTB	TELEPHONE TERMINAL BOARD
BYP	BY PASS			TV	TELEVISION
		HOA	HAND-OFF-AUTOMATIC	TYP	TYPICAL
C	CONDUIT	HT	HEIGHT		
CAB	CABINET	HZ	HERTZ	UFD	UNDERFLOOR DUCT
CALC	CALCULATE			UGND	UNDERGROUND
CAP	CAPACITY	IMC	INTERMEDIATE METAL CONDUIT	UL	UNDERWRITERS LABORATORY
CAT	CATALOG	IR	INFRARED	UON	UNLESS OTHERWISE NOTED
CATV	COMMUNITY ANTENNA TELEVISION			UPS	UNINTERRUPTIBLE POWER SUPPLY
CCR	CONTROL CONTACTOR	J-BOX	JUNCTION BOX	UTIL	UTILITY
CCTV	CLOSED CIRCUIT TELEVISION				
CD	CONSTRUCTION DOCUMENTS	LF	LINEAR FEET (FOOT)	V	VOLT
CF	CONTRACTOR FURNISHED	LTNG	LIGHTING		
CF/CI	CONTRACTOR FURNISHED/CONTRACTOR INSTALLED	LV	LOW VOLTAGE	WP	WEATHERPROOF
CF/OI	CONTRACTOR FURNISHED/OWNER INSTALLED				
CFE	CONTRACTOR FURNISHED EQUIPMENT	MATV	MASTER ANTENNA TELEVISION SYSTEM		
CLG	CEILING	MAX	MAXIMUM		
CMU	CONCRETE MASONRY UNIT	MECH	MECHANICAL		
COAX	COAX CABLE	MH	MANHOLE		
COM	COMMUNICATION	MIN	MINIMUM		
COMPT	COMPARTMENT	MT	MOUNT		
CONC	CONCRETE	MTD	MOUNTED		
CONT	CONTINUE	MTG	MOUNTING		
CONTR	CONTRACTOR				
COORD	COORDINATE	NA	NOT APPLICABLE		
CTV	CABLE TELEVISION	NEC	NATIONAL ELECTRICAL CODE		
CU	COPPER	NEUT OR N	NEUTRAL		
CU FT	CUBIC FEET	NIC	NOT IN CONTRACT		
CUR	CURRENT	NS	NO SCALE		
		NTS	NOT TO SCALE		

FIRE ALARM SYSTEM NOTES

FA1. ALL FIRE ALARM EQUIPMENT IS TO BE NEW, UL LISTED FOR FIRE SERVICE, AND SHALL BE CAPABLE OF COMPLETE INTEGRATION WITH THE EXISTING NOTIFIER FIRE ALARM SYSTEM.

FA2. ALL WIRING AND CONDUIT IS TO CONFORM TO NEC ARTICLE 760. WIRING SHALL BE UL LISTED, MINIMUM 300V TYPE FPLP PLENUM RATED SOLID COPPER OR STANDARD COPPER WITH MAXIMUM 19 STRANDS.

FA3. LOW VOLTAGE CONDUCTORS: PROVIDE CONDUCTORS IN ACCORDANCE WITH NFPA 70 AND NFPA 72, AND AS RECOMMENDED BY THE FIRE ALARM SYSTEM MANUFACTURER. CONDUCTORS SHALL BE COPPER, MINIMUM NO. 14 AWG, TWISTED SHIELDED PAIR.

FA4. SURVIVABILITY: PER AUTHORITY HAVING JURISDICTION, WIRING INSTALLED IN METAL RACEWAY WITHIN BUILDINGS THAT ARE PROTECTED THROUGHOUT BY SPRINKLERS SHALL BE CONSIDERED TO MEET THE REQUIREMENTS FOR PATHWAY SURVIVABILITY LEVEL 2 IN ACCORDANCE WITH NFPA 72 AS A 2-HOUR PERFORMANCE ALTERNATIVE.

FA5. PROVIDE FIRE ALARM RELAY AND DUCT DETECTOR CONNECTED TO FIRE ALARM SYSTEM, WITHIN 5' OF ALL DUCT PENETRATIONS THROUGH FIRE/SMOKE WALLS, WHETHER INDICATED ON ELECTRICAL OR MECHANICAL PLANS OR NOT.

FA6. ALL FIRE ALARM POWER CIRCUITS SHALL HAVE A DEDICATED 120V 20A BREAKER THAT SHALL BE RED IN COLOR AND MECHANICALLY PROTECTED (LOCKABLE IN THE "ON" POSITION), MARKED AS "FIRE ALARM CIRCUIT".

FA7. MINIMUM CANDELA RATING OF STROBES IS 15CD UNLESS NOTED OTHERWISE; "##" ADJACENT TO DEVICE INDICATES THE CANDELA RATING. PROVIDE SYNCHRONIZATION OF STROBES IN ALL ADJACENT AREAS WHERE STROBES ARE VISIBLE TO EACH OTHER.

FA8. FIRE ALARM DESIGN IS IN ACCORDANCE WITH THE NATIONAL FIRE PROTECTION ASSOCIATION (NFPA 72), STANDARD FOR THE FIRE PROTECTION OF INFORMATION TECHNOLOGY EQUIPMENT (NFPA 75) AND NATIONAL FIRE CODES (NFC); WHERE A FIRE ALARM RISER IS INDICATED, IT IS DIAGRAMMATIC IN NATURE AND NOT INTENDED TO REPRESENT A COMPLETE WIRING AND DEVICE DISPLAY. ALL WIRING AND DEVICES SHALL BE IN ACCORDANCE WITH SELECTED VENDOR'S POINT-BY-POINT WIRING DIAGRAM. REFER TO FLOOR PLAN FOR DESIGN INTENT AND PROPOSED QUANTITY OF FIRE ALARM SYSTEM COMPONENTS.

FA9. THESE DRAWINGS ARE SCHEMATIC IN NATURE AND ARE NOT INTENDED TO SHOW ALL POSSIBLE CONDITIONS. IT IS INTENDED THAT A COMPLETE FIRE ALARM SYSTEM BE PROVIDED WITH ALL THE NECESSARY EQUIPMENT, WIRING, CONDUIT, AND CONTROLS, COMPLETELY COORDINATED WITH ALL DISCIPLINES. ANY ITEMS AND LABOR REQUIRED FOR A COMPLETE FIRE ALARM SYSTEM, IN ACCORDANCE WITH ALL APPLICABLE CODES, STANDARDS, LOCAL AUTHORITIES AND THESE CONTRACT DOCUMENTS SHALL BE FURNISHED AT NO ADDITIONAL COST TO THE OWNER. THE FIRE ALARM CONTRACTOR SHALL CAREFULLY REVIEW ALL CONTRACT DOCUMENTS AND THE DESIGN OF OTHER TRADES BEFORE PREPARING SHOP DRAWINGS.

FA10. FIRE ALARM CONTRACTOR SHALL BE AWARE OF THE TYPE OF FINISHES, DECOR AND OCCUPANCY. COORDINATION WITH THE STAKEHOLDER(S) SHALL BE PERFORMED BY THE FIRE ALARM CONTRACTOR FOR PLACEMENT OF FIRE ALARM DEVICES.

FA11. FIRE ALARM SYSTEM SHALL COMPLY WITH NFPA 70, 72 AND 75 FOR PROPER INSTALLATION PRACTICES.

FA12. FIRE ALARM PATHWAYS IN ALL AREAS SHALL BE IN 3/4" EMT, AND SHALL BE PAINTED RED. ALL FIRE ALARM WIRING SHALL BE ROUTED THROUGH CONDUIT THAT IS STRICTLY DEDICATED FOR FIRE ALARM. NO OTHER SYSTEMS MAY UTILIZE FIRE ALARM WIRING CONDUIT OR EMT.

FA13. ALL FIRE ALARM JUNCTION BOX AND PULL BOX COVERS SHALL BE PAINTED RED.

FA14. INCREASE BATTERY CAPACITY OF FIRE ALARM SYSTEMS TO ACCOMMODATE ADDITIONAL LOAD.

FA15. PERFORM RE-ACCEPTANCE TESTING IN ACCORDANCE WITH NFPA 72.

FA16. FIRE ALARM CIRCUITS SHALL NOT HAVE SPLICES. CIRCUITS SHALL BE EXTENDED FROM DEVICE AND APPLIANCE SCREW TERMINALS.

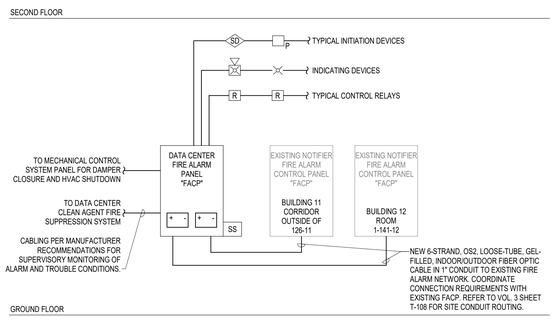

1 FIRE ALARM RISER DIAGRAM
N.T.S

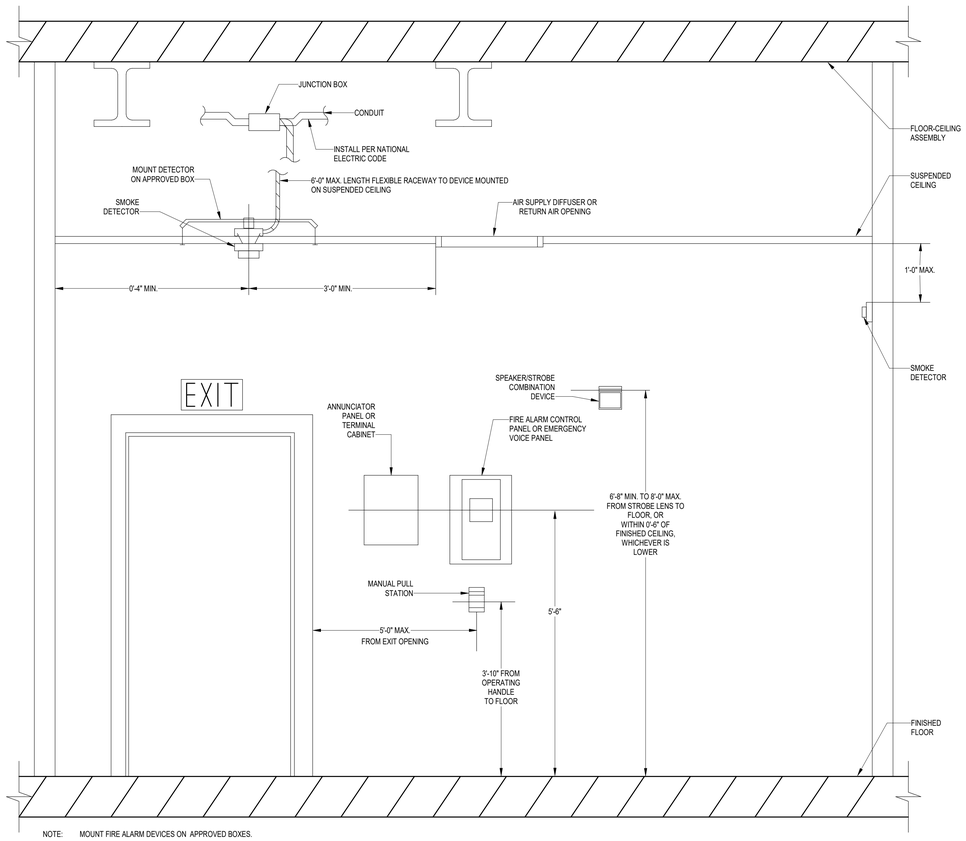

2 FIRE ALARM DEVICE MOUNTING DETAIL
N.T.S.

		OUTPUTS: CLEAN AGENT SYSTEM													FIRE ALARM SYSTEM												
		ACTUATE ALARM SIGNAL TO CLEAN AGENT PANEL	ACTUATE AUDIBLE CLEAN AGENT ALARM SIGNAL	ACTUATE SUPERVISORY TO CLEAN AGENT PANEL	ACTUATE AUDIBLE CLEAN AGENT SUPERVISORY SIGNAL	ACTUATE TROUBLE TO CLEAN AGENT PANEL	ACTUATE AUDIBLE CLEAN AGENT TROUBLE SIGNAL	EQUIPMENT POWER SHUTDOWN	HVAC SHUTDOWN (AHU-1 SHUTDOWN / ALL MOTORIZED DAMPERS CLOSE)	THE PROGRAMMED CLEAN AGENT 30 SEC. TIME DELAY WILL BEGIN	ABORT SWITCH CLEAN AGENT OVERRIDE	CLEAN AGENT DISCHARGE AFTER 30 SEC. TIME DELAY	CLEAN AGENT HORN/STROBE PRE-DISCHARGE INTERMITTENT HORN	CLEAN AGENT HORN/STROBE CONTINUOUS HORN	FIRE ALARM SIGNAL TO BUILDING FIRE ALARM	SUPERVISORY SIGNAL TO BUILDING FIRE ALARM SYSTEM	TROUBLE SIGNAL TO BUILDING FIRE ALARM	ACTUATE AUDIBLE TROUBLE ALARM SIGNAL TO FIRE ALARM PANEL	ACTIVATE STROBES/SOUNDER BASE THROUGHOUT BUILDING	DE-ACTIVATE FIRE ALARM SOUNDER BASE	DISPLAY ALARM CONDITION AT FIRE ALARM CONTROL PANEL	DISPLAY SUPERVISORY CONDITION AT FIRE ALARM CONTROL PANEL	DISPLAY SUPERVISORY CONDITION AT FIRE ALARM ANNUNCIATOR PANEL	DISPLAY TROUBLE CONDITION AT FIRE ALARM CONTROL PANEL	DISPLAY TROUBLE CONDITION AT FIRE ALARM ANNUNCIATOR PANEL		
	INPUTS	A	B	C	D	E	F	G	H	I	J	K	L	M	N	O	P	Q	R	S	T	U	V	W	X	Y	
1	SYSTEM AC POWER FAILURE					X	X										X	X						X	X		1
2	SYSTEM LOW BATTERY					X	X										X	X						X	X		2
3	SYSTEM OPEN CIRCUIT					X	X										X	X						X	X		3
4	SYSTEM GROUND FAULT					X	X										X	X						X	X		4
5	NOTIFICATION APPLIANCE CIRCUIT SHORT					X	X										X	X						X	X		5
6	DATA CENTER SINGLE SMOKE DETECTOR (ALERT LEVEL 1)			X	X											X						X	X				6
7	DATA CENTER MULTIPLE SMOKE DETECTORS (ALERT LEVEL 2)	X	X					X	X	X			X		X												7
8	CLEAN AGENT MANUAL PULL STATION	X	X					X	X	X			X		X												8
9	CLEAN AGENT SYSTEM ABORT PULL STATION			X	X						X					X											9
10	KEY DISCONNECT SWITCH			X	X											X											10
11	EXPIRATION OF THE CLEAN AGENT 30 SEC. TIME DELAY	X	X					X				X		X	X												11
12	ACTUATION LIMIT SWITCH SUPERVISORY			X	X											X											12
13	FIRE ALARM PULL STATION														X				X		X						13
14	SMOKE DETECTOR														X				X		X						14
15	FLOW SWITCH														X				X		X						15
16	TAMPER SWITCH															X						X	X				16
17	DUCT SMOKE DETECTOR															X						X	X				17
18	FIRE ALARM CONTROL PANEL INTERFACE																			X							18
19																											19
20																											20
21																											21
22																											22
23	-																										23
24	-																										24

NOTE: THIS MATRIX IS ONLY INTENDED TO SHOW THE MAJOR SYSTEM FUNCTIONS. SYSTEM SHALL ALSO PERFORM INPUTS/OUTPUTS REQUIRED BY NFPA 72 AND THE MANUFACTURER. PROVIDE PROGRAMMING AS REQUIRED FOR SYSTEM TO RESPOND AS NOTED IN MATRIX. INTENT IS LEVEL 1 DETECTION PROVIDE SUPERVISORY SIGNAL AT BUILDING AND CLEAN AGENT FIRE PANELS. LEVEL 2 PROVIDES GENERAL ALARM FOR BUILDING FIRE ALARM AND PROVIDE RELEASE SIGNAL TO CLEAN AGENT SYSTEM.

3 FIRE ALARM MATRIX
N.T.S

Revisions | Date

CONSULTANT
Above Group
ENGINEERING. DESIGN. CONSULTING.
www.abovegroupinc.com
COA/CA Lic. No. 31120
305 East Dr., Suite H, Melbourne, Florida 32904
PH: 321.345.9026

ARCHITECT/ENGINEER OF RECORD
RDC◆JPA ARCHITECTURE
524 Fernwood Drive, Altamonte Springs, Florida 32701 | www.rdcjpa.com | 800.362.1523

STAMP
REGISTERED LICENSED ARCHITECT No. 92822 STATE OF FLORIDA PROFESSIONAL

Office of Construction and Facilities Management
VA U.S. Department of Veterans Affairs

Drawing Title: FIRE ALARM LEGENDS & SYMBOLS
Phase: BID DOCUMENTS
Project Title: GAINESVILLE DATA CENTER
Project Number: 573-21-106
Building Number:
Approved: STATION CHIEF - EDWIN BURNETT
FULLY SPRINKLERED
Location: GAINESVILLE, FL
Issue Date: 04.20.2026
Checked: TDB
Drawn: CVM
Drawing Number: FA001

Autodesk Docs://Florida, Gainesville VA122085, VA Gainesville_Data Ctr_R25_MEPT.rvt
4/17/2026 1:16:19 PM
VA FORM 08 - 6231

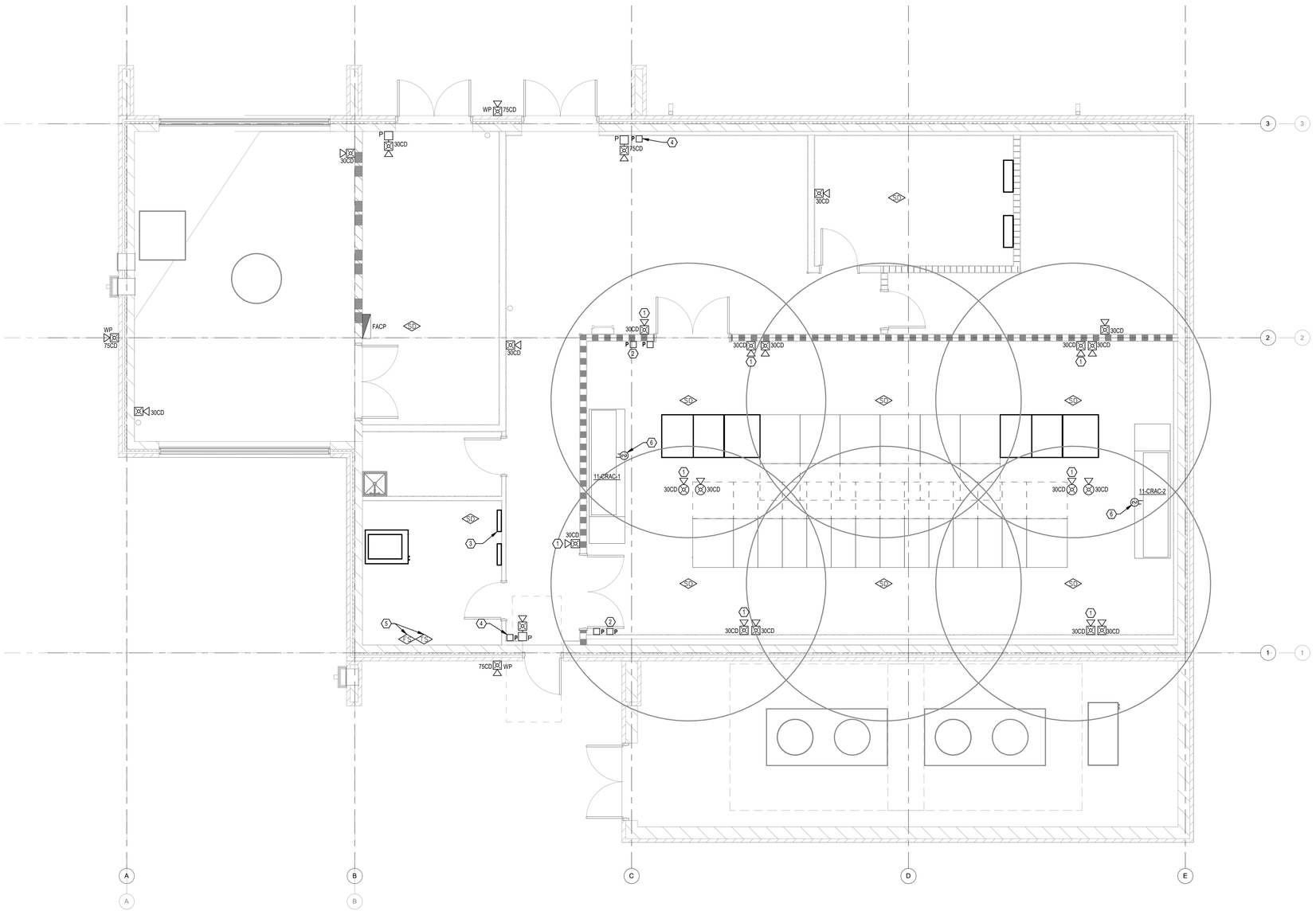

1 DATA CENTER - FIRST FLOOR - FIRE ALARM
1/4" = 1'-0"

A WARNING SIGN EXAMPLE
N.T.S.

DRAWING NOTES:

1. FIRE ALARM NOTIFICATION APPLIANCES SHALL BE RED WITH WHITE VISUAL NOTIFICATION LENSES. COORDINATE WITH FPC TO PROVIDE WHITE NOTIFICATION DEVICES WITH AMBER VISUAL NOTIFICATION LENSES THAT READ AGENT FOR CLEAN AGENT SYSTEM WARNING AND RELEASE.

CODED NOTES:

1. DATA CENTER CLEAN AGENT FIRE SUPPRESSION SYSTEM RELEASE VISUAL NOTIFICATION LENSES AND ALARM. PROVIDE AMBER COLOR VISUAL NOTIFICATION LENSES AND YELLOW PHENOLIC WARNING SIGN BELOW STROBE LIGHT. SIGN TEXT TO BE BLACK IN COLOR AND 1" MINIMUM IN HEIGHT: "WARNING DO NOT ENTER ROOM WHEN ALARM SOUNDS CLEAN AGENT BEING RELEASED". REFER TO WARNING SIGN EXAMPLE A, THIS SHEET.
2. ABORT PULL STATION FOR CLEAN AGENT SYSTEM. UPON ACTIVATION PULL STATION SHALL CANCEL RELEASE OF CLEAN AGENT AND PROVIDE TROUBLE SIGNAL AT BOTH THE BUILDING AND CLEAN AGENT SYSTEM PANELS. PROVIDE YELLOW PHENOLIC WARNING SIGN BELOW PULL STATION. SIGN TEXT TO BE BLACK IN COLOR AND 1" MINIMUM IN HEIGHT: "CLEAN AGENT SYSTEM ABORT PULL STATION".
3. CLEAN AGENT FIRE SUPPRESSION SYSTEM CONTROL PANEL. REFER TO FIRE PROTECTION DRAWINGS AND SHEET FA001 FOR ADDITIONAL INFORMATION.
4. CLEAN AGENT MANUAL RELEASE PULL STATION WITH CLEAR PLASTIC COVER. UPON ACTIVATION PULL STATION SHALL INITIATE 30 SECOND TIME DELAY FOR RELEASE OF CLEAN AGENT. PROVIDE YELLOW PHENOLIC WARNING SIGN BELOW PULL STATION. SIGN TEXT TO BE BLACK IN COLOR AND 1" MINIMUM IN HEIGHT: "CLEAN AGENT SYSTEM MANUAL RELEASE".
5. COORDINATE EXACT LOCATION AND MOUNTING HEIGHT OF FLOW AND TAMPER SWITCHES WITH FIRE PROTECTION CONTRACTOR PRIOR TO CONSTRUCTION.
6. DUCT MOUNTED SMOKE DETECTOR FURNISHED AND WIRED BY DIVISION 28 CONTRACTOR, MOUNTED IN DUCTWORK BY DIV 23 CONTRACTOR.

N 0 2' 4' 8' 12'
1/4" = 1'-0"

Revisions	Date

CONSULTANT
Above Group
ENGINEERING. DESIGN. CONSULTING.
www.abovegroupinc.com
COA/CA Lic. No. 31120
305 East Dr., Suite H,
Melbourne, Florida 32904
PH: 321.345.9026

ARCHITECT/ENGINEER OF RECORD
RDC◆JPA ARCHITECTURE
524 Fernwood Drive, Altamonte Springs, Florida 32701 | www.rdcjpa.com | 800.362.1523

STAMP
REGISTERED LICENSE No. 92822 STATE OF FLORIDA PROFESSIONAL ENGINEER

Office of Construction and Facilities Management
VA U.S. Department of Veterans Affairs

Drawing Title	FIRE ALARM FLOOR PLAN - DATA CENTER
Phase	BID DOCUMENTS
Project Title	GAINESVILLE DATA CENTER
Project Number	573-21-106
Building Number	43
Approved:	STATION CHIEF - EDWIN BURNETT
	FULLY SPRINKLERED
Location	GAINESVILLE, FL
Issue Date	04.20.2026
Checked	TDB
Drawn	CVM
Drawing Number	FA101

Autodesk Docs://Florida, Gainesville VA\122085_VA Gainesville_Data Ctr_R25_MEPT.rvt
4/17/2026 1:16:20 PM
VA FORM 08 - 6231

FIRE PROTECTION LEGEND

SYMBOL	DESCRIPTION
	OS&Y VALVE
	GATE VALVE
	BALL VALVE
	ALARM CHECK VALVE
	PRESSURE REGULATING VALVE
	BUTTERFLY VALVE
	FLOW SWITCH
	FIRE DEPARTMENT CONNECTION
	FIRE PROTECTION RISER
	PIPE TURNING DOWN
	PIPE TURNING UP
FS	FLOW SWITCH
TS	TAMPER SWITCH
HOSE	HOSE LINE CABINET
	FLUSHING CONNECTION OR CAP

HAZARD CLASSIFICATION LEGEND

KEY	HAZARD CLASSIFICATION
	LIGHT HAZARD
	ORDINARY HAZARD GROUP 1 QUICK RESPONSE SPRINKLER HEADS
	ORDINARY HAZARD GROUP 1 STANDARD RESPONSE SPRINKLER HEADS
	EXTRA HAZARD GROUP 1
	AREA NOT IN SCOPE

GENERAL LEGEND

SYMBOL	DESCRIPTION
FP / 1	FIRE PROTECTION RISER DESIGNATION: A = RISER IDENTIFYING SYSTEM TYPE 1 = RISER IDENTIFYING SYSTEM NUMBER
	SECTION SYMBOL: A = IDENTIFYING LETTER B = SHEET WHERE SECTION IS SHOWN SIM = SIMILAR (ONLY NOTED IF IT APPLIES)
	TITLE SYMBOL ON SHEET WHERE SHOWN A = IDENTIFYING NUMBER/LETTER
	REVISION CLOUD AND REVISION NUMBER
	SHEET NOTE CALLOUT
	DEMOLISH TO POINT INDICATED
	CONNECT TO EXISTING

FIRE PROTECTION ABBREVIATIONS

ABBR.	DESCRIPTION
AS	ABOVE SLAB
AHJ	AUTHORITY HAVING JURISDICTION
AFF	ABOVE FINISHED FLOOR
ANSI	AMERICAN NATIONAL STANDARDS INSTITUTE
ASTM	AMERICAN STANDARDS TESTING MATERIALS
BFP	BACKFLOW PREVENTER
BLDG	BUILDING
BOR	BOTTON OF RISER
BS	BELOW SLAB
CAP	CAPACITY
CONN	CONNECTION
CONT	CONTINUOUS
CV	CHECK VALVE
DIA	DIAMETER
DN	DOWN
DP	DRY PENDENT
DS	DRY SIDE WALL
DWG	DRAWING
ELEV	ELEVATION
EX	EXISTING
ºF	DEGREES FAHRENHEIT
FDC	FIRE DEPARTMENT CONNECTION
FDV	FIRE DEPARTMENT VALVE
FM	FACTORY MUTUAL
FP	FIRE PROTECTION
FS	FLOW SWITCH
FT	FEET
GA	GAUGE
GAL	GALLON(S)
GALV	GALVANIZED
GPM	GALLONS PER MINUTE
HD	HEAD
HP	HORSEPOWER
HR	HOUR
HYD	HYDRANT
HZ	HERTZ
IE	INVERT ELEVATION
ID	INTERNAL DIAMETER
IN	INCHES
IPS	INTERNATIONAL PIPE STANDARD

ABBR.	DESCRIPTION
KW	KILOWATT
LF	LINEAR FEET
MAX	MAXIMUM
MIN	MINIMUM
NA	NOT APPLICABLE
NC	NORMALLY CLOSED
NFPA	NATIONAL FIRE PROTECTION ASSOCIATION
NTS	NOT TO SCALE
OD	OUTSIDE DIAMETER
OS&Y	OUTSIDE SCREW AND YOLK
P	PUMP
PH	PHASE
PIV	POST INDICATING VALVE
POC	POINT OF CONNECTION
PSI	POUNDS PER SQUARE INCH
PS	PRESSURE SWITCH
QR	QUICK RESPONSE
RM	ROOM
RPDA	REDUCED PRESSURE DETECTOR ASSEMBLY
RPM	REVOLUTIONS PER MINUTE
RX	REMOVE EXISTING
SF	SQUARE FEET
SPEC	SPECIFICATIONS
SR	STANDARD RESPONSE
STD	STANDARD
TEMP	TEMPERATURE
TDH	TOTAL DYNAMIC HEAD
TOR	TOP OF RISER
TS	TAMPER SWITCH
TYP	TYPICAL
UG	UNDERGROUND
UL	UNDERWRITER'S LABORATORY
UNO	UNLESS NOTED OTHERWISE
V	VOLTS
VIV	VALVE IN VERTICAL
VLV	VALVE
VOL	VOLUME
W/	WITH

NOTE: SOME ABBREVIATIONS AND SYMBOLS SHOWN ON THIS LEGEND MAY NOT PERTAIN TO THIS PROJECT

FIRE PROTECTION COMPLIANCE NOTES

BUILDING DESIGN:

THE FIRE SUPPRESSION SCOPE FOR THE PROJECT INCLUDES PROVIDING APPROPRIATE FIRE PROTECTION FOR THE TELECOM ROOMS AND FOR THE DATA CENTER AS REQUIRED. THE DATA CENTER WILL BE A NEW BUILDING LOCATED IN PLACE OF AN EXISTING TRAILER TYPE BUILDING. THE DATA CENTER WILL BE PROTECTED BY AN AUTOMATIC SPRINKLER SYSTEM AND A CLEAN AGENT GASEOUS EXTINGUISHING SYSTEM PER THE VA FIRE PROTECTION DESIGN MANUAL (VAFPDM) 6.3 AND DESIGNED IN ACCORDANCE WITH NFPA 13, NFPA 75, NFPA 2001, AND THE VAFPDM.

SCOPE OF WORK:

PROVIDE A FULLY AUTOMATIC WET SPRINKLER SYSTEM IN ACCORDANCE WITH NFPA 13 2022 EDITION. ALL SPRINKLER HEADS SHALL BE QUICK RESPONSIVE TYPE OR STANDARD RESPONSE, REFER TO FLOOR PLANS FOR SPRINKLER TYPE, AND INSTALLED IN CENTER OF CEILING TILES. SPRINKLER CONTRACTOR SHALL USE FLOW DATA WHEN PERFORMING HYDRAULIC CALCULATIONS FOR THE NEW DATA CENTER ONLY.

FIRE PROTECTION SPRINKLER CONTRACTOR SHALL COORDINATE THE DESIGN AND INSTALLATION OF THE FIRE PROTECTION SPRINKLER SYSTEM AND DELIVER A COMPLETE, FULLY FUNCTIONAL, AND TESTED FIRE PROTECTION SYSTEM THAT MEETS THE REQUIREMENTS OF THE FIRE PROTECTION DRAWINGS, FIRE PROTECTION SPECIFICATIONS, LISTED CODES AND STANDARDS, AND THE REQUIREMENTS OF THE AHJ. THE FIRE PROTECTION SPRINKLER CONTRACTOR SHALL PROVIDE AND INSTALL NEW MATERIALS THAT ARE UL LISTED AND\OR FM APPROVED AS REQUIRED BY THE FIRE PROTECTION DRAWINGS AND THE FIRE PROTECTION SPECIFICATIONS. THE FIRE PROTECTION SPRINKLER CONTRACTOR SHALL INTEGRATE THE NEW FIRE SPRINKLER SYSTEM WITH THE NEW/EXISTING FIRE ALARM SYSTEM.

RENOVATION OF EXISTING TELECOM ROOMS:

A WET PIPE AUTOMATIC SPRINKLER SYSTEM IN ACCORDANCE WITH NFPA 13, EXCEPT AS INDICATED IN THE VA FIRE PROTECTION DESIGN MANUAL, WILL BE PROVIDED TO PROTECT ALL AREAS ASSOCIATED WITH THIS PROJECT. EXISTING AUTOMATIC SPRINKLER SYSTEMS WILL BE RECONFIGURED AS REQUIRED FOR THE RENOVATED AND NEW TELECOM ROOMS. EXISTING FIRE PROTECTION PIPING SHALL BE REROUTED AROUND SPACES. ONLY BRANCH PIPING TO SPRINKLER HEAD(S) SHALL BE ALLOWED IN TELECOM ROOMS.

QUICK RESPONSE FACTORY MUTUAL (FM) APPROVED SPRINKLERS SHALL BE INSTALLED IN ALL TELECOMMUNICATION ROOMS, EXCEPT WHERE SPECIFICALLY PROHIBITED OR NOTED ELSEWHERE IN THE VAFPDM.

NEW DATA CENTER CONSTRUCTION:

A WET PIPE AUTOMATIC SPRINKLER SYSTEM IN ACCORDANCE WITH NFPA 13, WILL BE PROVIDED TO PROTECT THE NEW DATA CENTER. IN ADDITION TO THE REQUIRED WET PIPE AUTOMATIC SPRINKLER SYSTEM SERVING THE DATA CENTER, A CLEAN AGENT GASEOUS EXTINGUISHING SYSTEM IS REQUIRED TO ALSO BE UTILIZED. THE CLEAN AGENT SYSTEM AND REQUIRED DETECTION SYSTEM SHALL BE DESIGNED ACCORDING TO NFPA 75 AND NFPA 2001.

CLEAN AGENT EXTINGUISHING MEDIA SHALL BE ONE OF THE THREE APPROVED VA CLEAN AGENTS: FM200 (HFC-227EA) (HALOCARBON), INERGEN (IG-541) (INERT GAS), AND NOVEC 1230 (FK-5-1-12) (HALOCARBON). THE ENVIRONMENTAL PROTECTION AGENCY (EPA) IS CURRENTLY PHASING DOWN THE USE OF FM200 WHICH STARTED JANUARY 1, 2022 AND 3M IS VOLUNTARILY PHASING OUT NOVEC 1230 BY THE END OF 2025. THEREFORE, THE NEW DATA CENTER CLEAN AGENT SYSTEM WILL USE INERGEN. THE CLEAN AGENT DESIGN CONCENTRATIONS ARE AS FOLLOWS ACCORDING TO VAFPDM 6.3.A: INERGEN: 41.9%.

STANDARD RESPONSE, FUSIBLE LINK, FM APPROVED, SPRINKLERS SHALL BE INSTALLED IN THE NEW DATA CENTER.

THE CLEAN AGENT SYSTEM SHALL BE INITIATED BY THE VERY EARLY WARNING FIRE DETECTION (VEWFD) SYSTEM PROVIDED FOR THIS SPACE. COORDINATE VEWFD SYSTEM WITH FIRE ALARM CONTRACTOR.

THE CLEAN AGENT SYSTEM SHALL HAVE ITS OWN CONTROL / RELEASING PANEL. THE SYSTEM WILL BE PROVIDED WITH ABORT SWITCHES AND MANUAL RELEASES ADJACENT TO THE EGRESS POINTS. THE SYSTEM WILL DISCHARGE FOLLOWING A DELAY TIMER FOR EITHER THE VEWFD REACHING THE REQUIRED THRESHOLD OR SOMEONE INITIATING THE MANUAL RELEASE. MANUAL RELEASE SWITCHES ARE DOUBLE-ACTION AND ARE UNIQUE IN APPEARANCE TO FIRE ALARM MANUAL PULL STATIONS. ABORT SWITCHES ARE A DEAD-MAN TYPE AND WILL PAUSE THE RELEASE TIMER.

FOR LOCAL NOTIFICATION, THE CLEAN AGENT SYSTEM WILL BE PROVIDED WITH AUDIBLE / VISUAL NOTIFICATION APPLIANCES. THE CLEAN AGENT AUDIBLE NOTIFICATION WILL BE SILENCED IF THE BUILDING FIRE ALARM SYSTEM IS ACTIVATED. THE STROBES SHALL REMAIN ACTIVE FOLLOWING A BUILDING FIRE ALARM ANNOUNCEMENT. THE CLEAN AGENT VISUAL NOTIFICATION WILL ACTIVATE AT THE PRE-ALARM THRESHOLD OF THE VEWFD. THE VISUAL NOTIFICATION APPLIANCES WILL ONLY ACTIVATE IF THE MANUAL RELEASE IS INITIATED.

CHARACTERISTICS OF THE WATER SUPPLY TO BE USED:

A HYDRANT FLOW TEST IN ACCORDANCE WITH NFPA 291 SHALL BE PERFORMED AND VERIFIED PRIOR TO PRODUCTION OF SHOP DRAWINGS.

BACKFLOW PREVENTION AND METERING SPECIFICATIONS:

THE BACKFLOW PREVENTION DEVICE ASSEMBLY AND METERING EQUIPMENT WILL MEET THE REQUIREMENTS OF THE LOCAL WATER PURVEYOR. ALL NEW INTERIOR FIRE PROTECTION EQUIPMENT SHALL BE UL LISTED AND FM APPROVED.

QUALITY AND PERFORMANCE SPECIFICATIONS OF ALL INTERIOR FIRE PROTECTION COMPONENTS:

ALL NEW INTERIOR FIRE PROTECTION EQUIPMENT EQUIPMENT SHALL BE UL LISTED AND FM APPROVED.

VALVING AND ALARM REQUIREMENTS TO MINIMIZE POTENTIAL FOR IMPAIRMENTS AND UNRECOGNIZED FLOW OF WATER:

THE FIRE SPRINKLER RISER FOR THIS BUILDING AND ALL CONTROL VALVE, POST INDICATOR AND BACKFLOW PREVENTER WILL BE EQUIPPED WITH A WATER FLOW SWITCH AND PRESSURE SWITCH ON PREACTION VALVE, WITH A LOCAL ALARM BELL AND FIRE ALARM PANEL.

ACCEPTANCE TEST CRITERIA:

FIRE SPRINKLER SYSTEM SHALL BE DESIGNED PER NFPA 13, 2022 EDITION AND SHALL COMPLY WITH THE LOCAL FIRE MARSHAL AND ALL AUTHORITIES HAVING JURISDICTION. THE ACCEPTANCE TESTING OF THE FIRE SPRINKLER SYSTEM AND IT'S COMPONENTS SHALL CONSIST OF ALL APPLICABLE ITEMS SHOWN ON THESE TWO FORMS, NFPA 13, 2022 EDITION, ANNEX A (FIG. A.29.1) CONTRACTOR'S MATERIAL AND TEST CERTIFICATE FOR ABOVE GROUND PIPING. SEE NFPA 13, 2022 EDITION CHAPTER 29 FOR SYSTEM ACCEPTANCE AND NFPA 25, 2023 INSPECTION TESTING AND MAINTENANCE.

1. NFPA 13 2022 CHAPTER 29, SYSTEM ACCEPTANCE
   - A. 29.1 APPROVAL OF SPRINKLER SYSTEM
   - B. 29.2 ACCEPTANCE REQUIREMENTS
   - C. 29.3 INSTRUCTIONS
   - D. 29.4 HYDRAULIC DESIGN INFORMATION SIGNS

APPLICABLE NFPA AND VA STANDARDS TO BE APPLIED:

1. U.S. DEPARTMENT OF VETERAN AFFAIRS FIRE PROTECTION DESIGN MANUAL - EIGHTH EDITION
2. U.S. DEPARTMENT OF VETERAN AFFAIRS INFRASTRUCTURE STANDARD FOR TELECOMMUNICATIONS SPACES 2021 EDITION
3. INTERNATIONAL BUILDING CODE 2021 EDITION
4. NFPA 13, 2022 EDITION, STANDARD FOR THE INSTALLATION OF SPRINKLER SYSTEMS
5. NFPA 24, 2022 EDITION, STANDARD FOR THE INSTALLATION OF PRIVATE FIRE SERVICE MAINS AND THEIR APPURTENANCES
6. NFPA 25, 2020 EDITION, INSPECTION, TESTING AND MAINTENANCE OF WATER BASED FIRE PROTECTION SYSTEM.
7. NFPA 75, 2020 EDITION, STANDARD FOR THE FIRE PROTECTION OF INFORMATION TECHNOLOGY EQUIPMENT
8. NFPA 101, 2021 EDITION, LIFE SAFETY CODE
9. NFPA 2001, 2022 EDITION, STANDARD ON CLEAN AGENT FIRE EXTINGUISHING SYSTEMS

CLASSIFICATION OF HAZARD OCCUPANCY FOR EACH ROOM OR AREA:

LIGHT HAZARD:
SPACES WITH LOW QUANTITY AND COMBUSTIBILITY OF CONTENTS
I.E. OFFICES, EXAM ROOMS, CORRIDORS, MEETING ROOMS, BREAK ROOMS, AND RESTROOMS.

ORDINARY HAZARD GROUP 1 - QUICK RESPONSE:
SPACES WITH MODERATE QUANTITY AND LOW COMBUSTIBILITY OF CONTENTS
I.E. LABORATORIES, MECHANICAL ROOMS, ELECTRICAL ROOMS, TELECOM ROOMS, JANITOR CLOSETS, CLEAN AND SOILED UTILITY ROOMS, AND AUTOPSY.

ORDINARY HAZARD GROUP 1 - STANDARD RESPONSE:
SPACES WITH MODERATE QUANTITY AND LOW COMBUSTIBILITY OF CONTENTS
I.E. DATA CENTERS

DESIGN APPROACH:

SPRINKLER SYSTEM TO EXTEND INTO ALL AREAS IN ACCORDANCE WITH NFPA 13 LIGHT HAZARD OR AS NOTED. LISTED AND APPROVED SIDEWALL (5.60 K-FACTOR) AND PENDENT (5.60 K-FACTOR) SPRINKLER TO BE PROVIDED. UPRIGHT (5.60 K-FACTOR) TO BE PROVIDED WHERE NOTED ON DRAWINGS.

LIGHT HAZARD:

SYSTEM TYPE: WET PIPE AUTOMATIC SPRINKLER SYSTEM, USING STEEL SUPPLY PIPING TO NEW QUICK RESPONSE, PENDENT OR UPRIGHT. AREAS SUBJECT TO FREEZING SHALL USE DRY BARREL TYPE SPRINKLERS.

K-FACTOR: 5.6.
DENSITY: 0.10 GPM/SQ.FT.

AREA OF OPERATION: 900 SQ FT MIN AND 1500 SQ FT MAX (DESIGN AREA REDUCTION MAY ONLY BE USED IF CEILING HEIGHT AND AREA CLASSIFICATION PERMITS PER NFPA 13.

TEMPERATURE RATING: 155 DEGREES F.
SPACING: 225 SQ. FT. MAX. PER SPRINKLER OR BY MANUFACTURER LITERATURE.
HOSE ALLOWANCE: 100 GPM

ORDINARY HAZARD GROUP 1 - QUICK RESPONSE :

SYSTEM TYPE: WET PIPE AUTOMATIC SPRINKLER SYSTEM, USING STEEL SUPPLY PIPING TO NEW QUICK RESPONSE, PENDENT OR UPRIGHT .

K-FACTOR: 5.6, 8.0, 11.2, OR 14.0.
DENSITY: 0.15 GPM/SQ.FT.

AREA OF OPERATION: 900 SQ FT MIN AND 1500 SQ FT MAX (DESIGN AREA REDUCTION MAY ONLY BE USED IF CEILING HEIGHT AND AREA CLASSIFICATION PERMITS PER NFPA 13.

TEMPERATURE RATING: 155 DEGREES F.
SPACING: 130 SQ. FT. MAX. PER SPRINKLER OR BY MANUFACTURER LITERATURE.
HOSE ALLOWANCE: 250 GPM

ORDINARY HAZARD GROUP 1 - STANDARD RESPONSE:

SYSTEM TYPE: WET PIPE AUTOMATIC SPRINKLER SYSTEM, USING STEEL SUPPLY PIPING TO NEW STANDARD RESPONSE, PENDENT OR UPRIGHT .

K-FACTOR: 5.6, 8.0, 11.2, OR 14.0.
DENSITY: 0.15 GPM/SQ.FT.

AREA OF OPERATION: 900 SQ FT MIN AND 1500 SQ FT MAX (DESIGN AREA REDUCTION MAY ONLY BE USED IF CEILING HEIGHT AND AREA CLASSIFICATION PERMITS PER NFPA 13.

TEMPERATURE RATING: 155 DEGREES F.
SPACING: 130 SQ. FT. MAX. PER SPRINKLER OR BY MANUFACTURER LITERATURE.
HOSE ALLOWANCE: 250 GPM

FIRE PROTECTION GENERAL NOTES

1. FIRE PROTECTION SYSTEM SHALL COMPLY WITH NFPA 13 AND VA FIRE PROTECTION MANUAL FOR INSTALLATION OF SPRINKLER SYSTEMS. INSPECTION, TESTING, AND MAINTENANCE SHALL COMPLY TO NFPA 25. IN ADDITION, INSTALLATION AND INSPECTION, TESTING, AND MAINTENANCE SHALL COMPLY WITH THE PROJECT SPECIFICATIONS AND ALL APPLICABLE CODES & AHJ REQUIREMENTS.
2. FINAL INSPECTION AND APPROVAL BY AUTHORITY HAVING JURISDICTION (AHJ).
3. SPRINKLER SHOP DRAWINGS AND MATERIAL SUBMITTALS SHALL BE SUBMITTED TO THE ARCHITECT/ENGINEER AND THE VA COR AND SHALL BE APPROVED PRIOR TO ANY INSTALLATION. THE ENGINEER OF RECORD SHALL HAVE THE RIGHT TO REJECT ANY SUBMITTALS.
4. CUTTING OF STRUCTURAL AND/OR ARCHITECTURAL MEMBERS TO BE DONE ONLY WITH THE WRITTEN APPROVAL OF THE COR AND STRUCTURAL ENGINEER.
5. FITTINGS REQUIRED FOR PROPER INSTALLATION, COORDINATION WITH OTHER EXISTING TRADES, AND/OR TO MAINTAIN PROPER CLEARANCES SHALL BE PROVIDED. VERIFY STRUCTURAL, MECHANICAL, ELECTRICAL INSTALLATIONS AND AVOID AN/ALL OBSTRUCTIONS OR INTERFERENCES WITH FIRE PROTECTION PIPE ROUTING.
6. CONTRACTOR SHALL MAKE A FIELD VISIT TO VERIFY ARCHITECTURAL REFLECTED CEILING CONDITIONS AND ELECTRICAL LIGHTING, CEILING CONFIGURATIONS AND HEIGHTS.
7. FIRE STOP ALL PENETRATIONS OF SMOKE/FIRE WALLS, CEILINGS, FLOORS, ROOFS, ETC., FLASH AND COUNTERFLASH ROOF PENETRATIONS.
8. PROVIDE ACCESS PANELS TO ALL VALVES ABOVE NON-ACCESSIBLE CEILINGS AND CHASES.
9. SPRINKLER ARE TO BE COORDINATED WITH ALL LOCATIONS OF DIFFUSERS, SPEAKERS, LIGHTING FIXTURES, CEILING SYSTEMS AND STRUCTURAL SYSTEM.
10. INDICATE CENTER TO CENTER DIMENSIONS AND/OR PIPE CUT LENGTHS AND NOMINAL PIPE DIAMETERS ON ALL PIPING. INDICATE PIPE TYPE, SCHEDULE OF WALL THICKNESS AND METHOD OF JOINING ON SHOP DRAWING.
11. PROVIDE STOCK OF EXTRA SPRINKLERS IN ACCORDANCE WITH NFPA 13.
12. PROVIDE DETAIL AND INDICATE TYPE OF HANGERS TO BE INSTALLED FOR SPRINKLER PIPING. METHODS OF HANGING PIPES, HEADERS AND BRANCHES SHALL BE IN ACCORDANCE WITH NFPA 13. ALL HANGERS ON 4" PIPE AND LARGER SHALL BE CLEVIS-TYPE HANGERS. HANGERS SHALL NOT INTERFERE WITH ANY OTHER TRADE. POWDER DRIVEN STUDS SHALL NOT BE USED.
13. WELD-O-LETS SHALL BE TWO SIZES SMALLER THAN CROSS MAIN, NO LENGTH OF CROSS MAIN SHALL BE GREATER THAN 10'-0". ALL SPRINKLER PIPING & FITTINGS SHALL BE INSTALLED ABSOLUTELY RUST-FREE.
14. AUTOMATIC SPRINKLER TEMPERATURE RATINGS OF FUSIBLE ELEMENTS TO BE IN ACCORDANCE WITH NFPA 13.
15. ALL VALVES FOR FIRE SERVICE SHALL BE LISTED BY THE UNDERWRITER'S LABORATORIES, INC. OR THE FACTORY MUTUAL LABORATORIES. VALVES SHALL BE FACTORY MARKED "UL" OR "FM", AND RATED FOR 175 PSI WORKING PRESSURE.
16. ELECTRICALLY SUPERVISED VALVES SHALL BE PROVIDED WHERE REQUIRED IN NFPA 13. TYPE AND EXACT LOCATION AND PURCHASE/INSTALLATION OF FLOW AND SUPERVISORY SWITCHES SHALL BE BY THE SPRINKLER CONTRACTOR. ELECTRICAL CONTRACTOR TO PROVIDE ADDITIONAL CIRCUITS, WIRING, SWITCHES, CONDUIT OR JUNCTION BOXES REQUIRED.
17. SPRINKLER COVERAGE SHALL COMPLY WITH NFPA 13. SPRINKLER LOCATIONS WITH RESPECT TO OBSTRUCTIONS SHALL COMPLY WITH NFPA 13-2022, CHAPTER 9, OR THE APPROPRIATE CHAPTER BASED ON SPRINKLER TYPE.
18. IMMEDIATELY NOTIFY THE COR OF ANY DISCREPANCIES FOUND BETWEEN THESE PLANS, OTHER ENGINEERING PLANS, THE ARCHITECTURAL PLANS AND/OR FIELD CONDITIONS PRIOR TO FINAL BID PRICE OR FINAL PERMITTING.
19. IN CASE OF DISPUTE OR DOUBT AS TO INTENT OF DRAWINGS OR SPECIFICATIONS, OBTAIN ARCHITECT/ENGINEER'S WRITTEN DECISION BEFORE PROCEEDING WITH BID OR WORK INVOLVED.
20. BEFORE SUBMITTING PROPOSAL OR BID, EXAMINE ALL DRAWINGS AND SPECIFICATIONS RELATING TO THIS PROJECT, THE AMOUNT OF SPACE AVAILABLE FOR PIPING, EQUIPMENT AND CONNECTING SERVICES, THE SCOPE OF SITE OF THE WORK, THE REQUIREMENTS TO CORRELATE THE FIRE PROTECTION WORK WITH THAT OF OTHER TRADES AND THE TIME SCHEDULE NECESSARY TO PERFORM THAT WORK.
21. PIPE SHALL BE REAMED AND CLEANED BEFORE ASSEMBLY, AND AFTER ASSEMBLY THE ENTIRE PIPING SYSTEM SHALL BE FLUSHED CLEAN.
22. ADJUST NEW SPRINKLER PIPING AND SPRINKLER HEAD PLACEMENT TO ACCOMMODATE EXISTING CEILING HEIGHTS AND STRUCTURAL CONFIGURATIONS.
23. PROVIDE SPRINKLERS ABOVE AND BELOW EXPOSED DUCTWORK WIDER THAN 4 FEET.
24. PROVIDE HAZARD COVERAGE FOR THE FUNCTIONS FOR EACH AREA.
25. INDICATE THE LOCATION AND SIZE OF BLIND SPACES AND CLOSETS.
26. INDICATE THE TOTAL SQUARE FOOT AREA PROTECTED BY SYSTEM(S).
27. INDICATE THE NUMBER OF SPRINKLERS ON EACH RISER.
28. FIRE PROTECTION CONTRACTOR SHALL ASSIST IN PREPARATION OF COORDINATION DRAWINGS FOR ALL LEVELS WHICH INDICATE ALL THE ENGINEERING DISCIPLINES & FIRE PROTECTION PIPING. THESE DRAWINGS SHALL BE PREPARED & APPROVED BY THE ENGINEER OF RECORD PRIOR TO ANY INSTALLATION.
29. FIRE SPRINKLER PIPING SHALL NOT TRAVEL OVER THE TOPS OF ELECTRICAL PANELBOARDS.
30. REFER TO ARCHITECTURAL DRAWINGS FOR CEILING HEIGHTS IN EACH AREA.
31. ALL EXPOSED PIPING SHALL BE SHALL BE PAINTED RED.
32. ALL MATERIALS, WHERE APPLICABLE, SHALL BE U.L. LISTED OR FACTORY MUTUAL APPROVED FOR USE IN AUTOMATIC SPRINKLER SYSTEMS. ALL NEW PIPING SHALL BE HYDROSTATICALLY TESTED FOR TWO HOURS IN ACCORDANCE WITH NFPA 13. MINIMUM HYDROSTATIC TEST PRESSURE SHALL BE 200 PSI.
33. FLEXIBLE SPRINKLER CONNECTIONS SHALL ONLY BE PERMITTED UPON VA APPROVAL. IF FLEXIBLE SPRINKLER CONNECTIONS ARE PERMITTED AND USED, HYDRAULIC CALCULATIONS MUST BE PERFORMED AND SUBMITTED TO THE ENGINEER OF RECORD.
34. THE SMALL ROOM RULE SHALL BE ACCEPTABLE FOR PLACEMENT OF SPRINKLERS PER NFPA 13-2022, 10.2.5.2.3.
35. UPON SPRINKLER SYSTEM IMPAIRMENT, NFPA 25-2023, SHALL BE FOLLOWED DURING SPRINKLER SYSTEM DOWNTIME. APPROVED PERSONNEL SHALL COORDINATE REQUIREMENTS PER NFPA 25, SUCH AS AN APPROVED FIRE WATCH IF REQUIRED BY THE FACILITY'S INTERIM LIFE SAFETY MEASURE (ILSM) POLICY. IMPAIRMENT PROCEDURES REQUIRED TO BE TAKEN SHALL BE INCLUDED IN CONTRACTOR'S BUDGET.

SHEET LIST

SHEET NUMBER	SHEET NAME
FP001	FIRE PROTECTION LEGENDS & SYMBOLS
FP101	FIRE PROTECTION FLOOR PLANS - DATA CENTER
FP501	FIRE PROTECTION DETAILS - DATA CENTER

4/17/2026 3:53:02 PM

Autodesk Docs://Florida, Gainesville VA/122085_VA Gainesville_Data Ctr_R25_MEPT.rvt

Revisions		Date

CONSULTANT

Above Group
ENGINEERING. DESIGN. CONSULTING.
www.abovegroupinc.com
COA/CA Lic. No. 31120
305 East Dr., Suite H,
Melbourne, Florida 32904
PH: 321.345.9026

ARCHITECT/ENGINEER OF RECORD

RDC JPA
ARCHITECTURE
524 Fernwood Drive, Altamonte Springs, Florida 32701 | www.rdcjpa.com | 800.362.1523

STAMP

STATE OF TEXAS
CHRISTOPHER BAILEY
130679
LICENSED
PROFESSIONAL ENGINEER

Office of Construction and Facilities Management

VA U.S. Department of Veterans Affairs

Drawing Title	Phase	Project Title	Project Number
FIRE PROTECTION LEGENDS & SYMBOLS	BID DOCUMENTS	GAINESVILLE DATA CENTER	573-21-106
			Building Number:
Approved: STATION CHIEF - EDWIN BURNETT	FULLY SPRINKLERED	Location: GAINESVILLE, FL	Drawing Number: FP001
		Issue Date: 04.20.2026 / Checked: GSC / Drawn: CNB	

VA FORM 08 - 6231

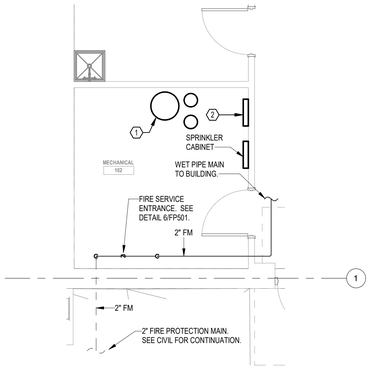

2 DATA CENTER - FIRST FLOOR- FIRE PROTECTION - PART PLAN
1/4" = 1'-0"

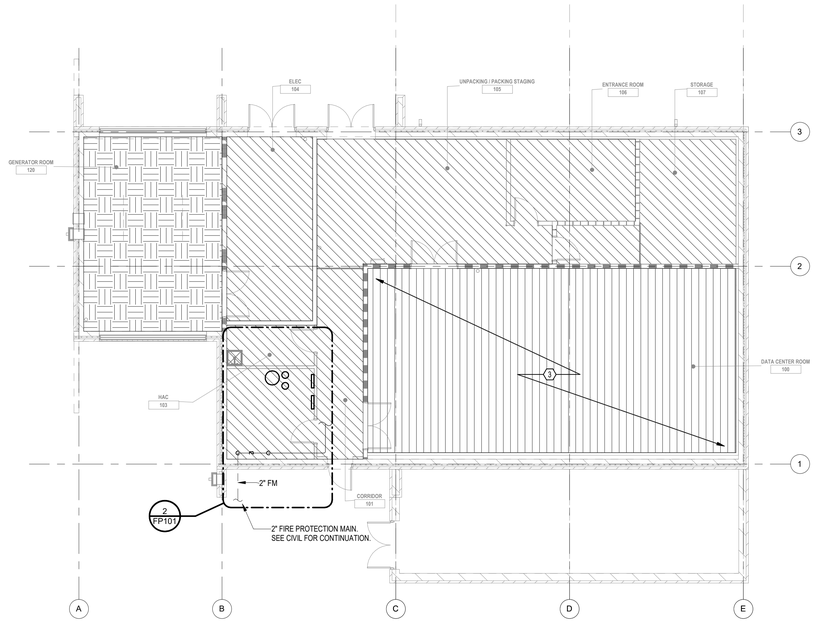

1 DATA CENTER - FIRST FLOOR- FIRE PROTECTION - NEW
1/8" = 1'-0"

SCOPE OF WORK NOTES:

1. CONTRACTOR IS RESPONSIBLE FOR COORDINATING OF ALL FIRE SPRINKLER PIPING WITH HVAC, PLUMBING, AND TELECOM TRADES.

DRAWING NOTES:

1. INFORMATION SHOWN ON THIS DRAWING PERTAINING TO EXISTING CONDITIONS HAS BEEN OBTAINED FROM AVAILABLE BUILDING DRAWINGS OR GENERAL FIELD OBSERVATIONS AND MAY NOT INDICATE ACTUAL EXISTING CONDITIONS IN DETAIL OR DIMENSION. THE CONTRACTOR IS RESPONSIBLE FOR DETERMINING THE ACTUAL EXISTING CONDITIONS PRIOR TO FABRICATION OR PERFORMANCE OF ANY WORK. SHOULD CONDITIONS BE DISCOVERED THAT PREVENT EXECUTION OF THE WORK AS INDICATED, THE CONTRACTOR SHALL IMMEDIATELY NOTIFY THE COR IN WRITING AND AWAIT DIRECTION BEFORE PROCEEDING WITH THE WORK.
2. NOTIFICATION APPLIANCES AND PULL STATIONS FOR THE CLEAN AGENT FIRE SUPPRESSION SYSTEM WILL BE PROVIDED BY THE FIRE ALARM CONTRACTOR. COORDINATE WITH THE FIRE ALARM CONTRACTOR TO PROVIDE A COMPLETE AND FUNCTIONAL SYSTEM.

CODED NOTES:

1. TWO (2) FK-5-1-12 CYLINDERS. SYSTEM TO BE A TOTAL FLOOD DESIGN FOR A CLASS C SYSTEM. TOTAL VOLUME OF THE SYSTEM TO BE 10,800 SQFT, WITH A 4.7% CONCENTRATION AT 68 DEGREES F, AND A 35% SAFETY FACTOR. TOTAL SYSTEM QUANTITY REQUIRED IS 625 LBS. CYCLINDERS SHALL COMPLETE WITH CYLINDER VALVE, ELECTRONIC RELEASING MECHANISM, PRESSURE GAUGE, LOW PRESSURE SWITCH, A CHECK VALVE, A MANUAL VALVE ACTUATOR, AND A CYLINDER WALL MOUNTING BRACKET. DESIGN BASIS OF CYCLINDERS TO BE FIKE 375 LB, WITH A FIKE FK-5-1-12, 180 DEGREE BRASS DISPERSION NOZZLE. FINAL CLEAN AGENT SYSTEM TO BE SIZED BY CLEAN AGENT CONTRACTOR AS PART OF SYSTEM DESIGN.
2. CLEAN AGENT CONTROL PANEL.
3. FIRE SPRINKLER CONTRACTOR TO PROVIDE NEW SPRINKLER IN DATA CENTER AND ASSOCIATED AFFECTED SPACES COMPLIANT WITH NFPA 13 AND VA REQUIREMENTS FOR AN ORDINARY HAZARD GROUP 1 OCCUPANCY TYPE. PROVIDE NEW BRANCH CONNECTION PIPING AND STANDARD RESPONSE CEILING PENDANT HEADS WITH PROTECTIVE CAGES. NEW SPRINKLER TO BE INSTALLED AT THE TIME THE CEILING IS REMOVED TO MAINTAIN FULL SPRINKLER COVERAGE. DO NOT ROUTE BRANCH PIPING OVER TELECOM EQUIPMENT. COORDINATE SPRINKLER LOCATIONS WITH DRAIN PANS AND OTHER OBSTRUCTIONS. ALL EXPOSED SPRINKLER PIPING, BOTH NEW AND EXISTING, SHALL BE PAINTED RED.

KEY	HAZARD CLASSIFICATION
	LIGHT HAZARD
	ORDINARY HAZARD GROUP 1 QUICK RESPONSE SPRINKLER HEADS
	ORDINARY HAZARD GROUP 1 STANDARD RESPONSE SPRINKLER HEADS
	EXTRA HAZARD GROUP 1
	AREA NOT IN SCOPE

N

0 4' 8' 16' 24'
1/8" = 1'-0"

0 2' 4' 8' 12'
1/4" = 1'-0"

Revisions	Date

CONSULTANT

Above Group
ENGINEERING. DESIGN. CONSULTING.
www.abovegroupinc.com
COA/CA Lic. No. 31120
305 East Dr., Suite H,
Melbourne, Florida 32904
PH: 321.345.9026

ARCHITECT/ENGINEER OF RECORD

RDC◆JPA ARCHITECTURE
524 Fernwood Drive, Altamonte Springs, Florida 32701 | www.rdcjpa.com | 800.362.1523

STAMP

STATE OF TEXAS
CHRISTOPHER BAILEY
130679
LICENSED
PROFESSIONAL ENGINEER
Chris Bailey

Office of Construction and Facilities Management

VA U.S. Department of Veterans Affairs

Drawing Title: FIRE PROTECTION FLOOR PLANS - DATA CENTER	Phase: BID DOCUMENTS	Project Title: GAINESVILLE DATA CENTER	Project Number: 573-21-106
Approved: STATION CHIEF - EDWIN BURNETT	FULLY SPRINKLERED	Location: GAINESVILLE, FL	Building Number: 43
		Issue Date: 04.20.2026 / Checked: GSC / Drawn: CNB	Drawing Number: FP101

Autodesk Docs://Florida, Gainesville VA(12086)_VA Gainesville_Data Ctr_R25_MEP1.rvt
4/17/2026 3:53:05 PM

VA FORM 08 - 6231

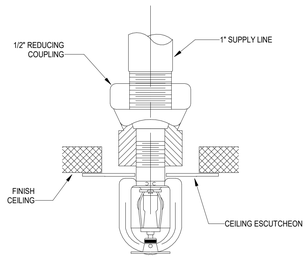

NOTE: ALL NEW SPRINKLERS SHALL BE UL LISTED, FM APPROVED, AND QUICK RESPONSE.

1 PENDENT SPRINKLER HEAD DETAIL
N.T.S.

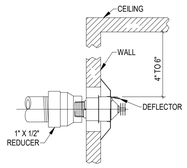

NOTE: COORDINATE LOCATION OF SPRINKLER HEADS WITH ARCHITECTURAL WALL PAPER BORDERS TO AVOID LOCATING OF SPRINKLER HEADS IN WALL PAPER BORDER.

2 QUICK RESPONSE SPRINKLER HEAD DETAIL
N.T.S.

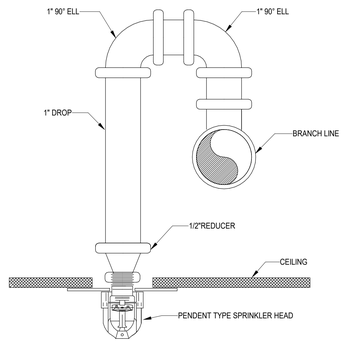

NOTE:

1. THE CUMULATIVE HORIZONTAL LENGTH OF AN UNSUPPORTED ARMOVER TO A SPRINKLER, SPRINKLER DROP, OR SPRIG SHALL NOT EXCEED 24 INCH FOR STEEL PIPE OR 12 INCH FOR COPPER PIPE PER NFPA 13 17.4.3.5

3 RETURN BEND DETAIL
N.T.S.

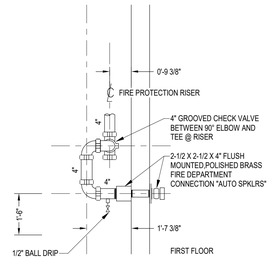

4 FIRE DEPARTMENT CONNECTION DETAIL
N.T.S.

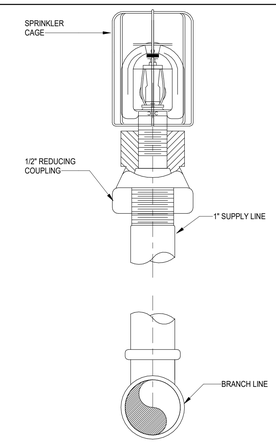

NOTE: ALL NEW SPRINKLERS SHALL BE UL LISTED, FM APPROVED, AND QUICK RESPONSE.

5 UPRIGHT PENDENT SPRINKLER HEAD DETAIL
N.T.S.

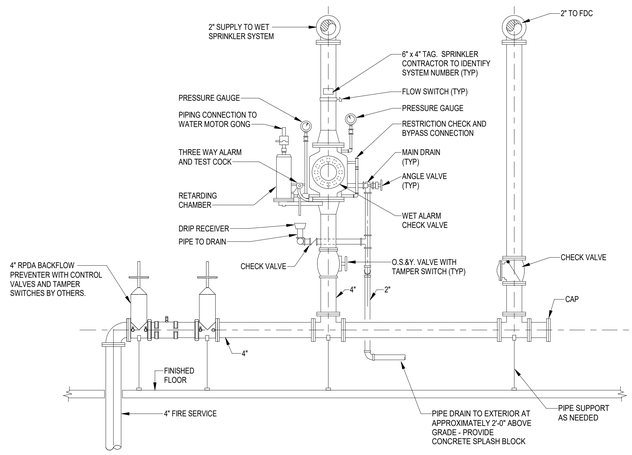

6 FIRE SERVICE ENTRANCE DETAIL
N.T.S.

Revisions	Date

CONSULTANT

Above Group
ENGINEERING. DESIGN. CONSULTING.
www.abovegroupinc.com
COA/CA Lic. No. 31120
305 East Dr., Suite H,
Melbourne, Florida 32904
PH: 321.345.9026

ARCHITECT/ENGINEER OF RECORD

RDC◆JPA
ARCHITECTURE
524 Fernwood Drive, Altamonte Springs, Florida 32701 | www.rdcjpa.com | 800.362.1523

STAMP

STATE OF TEXAS
CHRISTOPHER BAILEY
130679
LICENSED
PROFESSIONAL ENGINEER

Chris Bailey

Office of Construction and Facilities Management

VA U.S. Department of Veterans Affairs

Drawing Title: FIRE PROTECTION DETAILS - DATA CENTER	Phase: BID DOCUMENTS	Project Title: GAINESVILLE DATA CENTER	Project Number: 573-21-106
Approved: STATION CHIEF - EDWIN BURNETT	FULLY SPRINKLERED	Location: GAINESVILLE, FL	Building Number:
		Issue Date: 04.20.2026 / Checked: GSC / Drawn: CNB	Drawing Number: FP501

Autodesk Docs://Florida, Gainesville VA/12085_VA Gainesville_Data Ctr_R25_MEPT.rvt
4/17/2026 3:53:07 PM

VA FORM 08 - 6231

PLUMBING SYMBOL LEGEND

SYMBOL	DESCRIPTION
	NEW PIPING
	EXISTING PIPING
	DEMOLISHED PIPING
G	NATURAL GAS PIPING
CA	COMPRESSED AIR PIPING
CW	COLD WATER PIPING
HW	HOT WATER PIPING
HWR	HOT WATER RETURN PIPING
S U/G	SANITARY DRAINAGE PIPING (UNDERGROUND)
SAN	SANITARY DRAINAGE PIPING (ABOVE SLAB)
STO	STORM OVERFLOW (SECONDARY)
ST	STORM (PRIMARY)
ST U/G	STORM PIPING (UNDERGROUND)
V	VENT PIPING
CD	CONDENSATE PIPING
OR	CLEANOUTS
	PIPE END CAP
	PIPE TURNING DOWN
	PIPE TURNING UP
	PIPE TURNING DOWN (TEE)
	PIPING TEE
	ROLL DOWN
	P-TRAP
	FLOW ARROW
HB-1 OR WHY-1	HOSE BIBB / WALL HYDRANT
	PRESSURE GAUGE
	CIRCULATING PUMP
	BALL VALVE
	CALIBRATING BALANCING VALVE
	BUTTERFLY VALVE
	UNION
	STRAINER
	CONTROL VALVE
	PSI REG.
	PSI REG.
	CHECK VALVE
	FLOW SWITCH
	FLEX CONNECTION
	THREE-WAY CONTROL VALVE
	THERMOMETER
	RELIEF VALVE
	VALVE ON RISER
	TEST PLUG
	FLOW SWITCH
	PRESSURE SWITCH
	GLOBE VALVE
	AUTOMATIC AIR VENT

SYMBOL	DESCRIPTION
A / 1	PLUMBING RISER DESIGNATION: A = RISER IDENTIFYING SYSTEM TYPE 1 = RISER IDENTIFYING SYSTEM NUMBER
A / B SIM	SECTION SYMBOL: A = IDENTIFYING LETTER B = SHEET WHERE SECTION IS SHOWN SIM = SIMILAR (ONLY NOTED IF IT APPLIES)
A	TITLE SYMBOL ON SHEET WHERE SHOWN A = IDENTIFYING NUMBER/LETTER
1	REVISION CLOUD AND REVISION NUMBER
1	SHEET NOTE CALLOUT
	DEMOLISH TO POINT INDICATED
	CONNECT TO EXISTING
PDI-"A"	WATER HAMMER ARRESTER & SIZE
	GATE VALVE
	BALL VALVE
	CIRCUIT SETTER VALVE
	CHECK VALVE
	THERMOSTATIC MIXING VALVE
	PRESSURE REGULATING VALVE
	BUTTERFLY VALVE

WATER HAMMER ARRESTOR

SYMBOL	PIPE SIZE	PDI STANDARD	FIXTURE UNIT CAP.
	1/2"	A	1 TO 11
	3/4"	B	12 TO 32
	1"	C	33 TO 60
	1-1/4"	D	61 TO 113

NOTE: SOME SYMBOLS SHOWN ON THIS LEGEND MAY NOT PERTAIN TO THIS PROJECT

PLUMBING ABBREVIATIONS

ABBR.	DESCRIPTION
AS	ABOVE SLAB
ADA	AMERICANS WITH DISABILITIES ACT
AFF	ABOVE FINISHED FLOOR
AFG	ABOVE FINISHED GRADE
ANSI	AMERICAN NATIONAL STANDARDS INSTITUTE
AP	ACCESS PANEL
ASTM	AMERICAN STANDARDS TESTING MATERIALS
AWWA	AMERICAN WATER WORKS ASSOCIATION
BFP	BACKFLOW PREVENTER
BS	BELOW SLAB
BF	BELOW FLOOR
BG	BELOW GRADE
CA	COMPRESSED AIR
CD	CONDENSATE
CO	CLEANOUT
CONN	CONNECTION
CONT	CONTINUOUS
COR	CONTRACTING OFFICER'S REPRESENTATIVE
CP	CIRCULATING PUMP
CW	COLD WATER
DF	DRINKING FOUNTAIN
DFU	DRAINAGE FIXTURE UNITS
DIA	DIAMETER
DN	DOWN
DWG	DRAWING
DW	DOMESTIC WATER
ECO	EXTERIOR CLEANOUT
ELEV	ELEVATION
EQUIP	EQUIPMENT
EWC	ELECTRIC WATER COOLER
EWH	ELECTRIC WATER HEATER
EX	EXISTING
°F	DEGREES FAHRENHEIT
FCO	FLOOR CLEANOUT
FD	FLOOR DRAIN
FIN	FINISH
FL	FLOOR
FPS	FEET PER SECOND
FT	FEET
FU	FIXTURE UNITS
G	NATURAL GAS
GAL	GALLON(S)
GPM	GALLONS PER MINUTE
GR	GREASE WASTE
HB	HOSE BIBB
HP	HORSEPOWER
HR	HOUR
HW	HOT WATER
HWR	HOT WATER RETURN
HZ	HERTZ
IE	INVERT ELEVATION
ID	INTERNAL DIAMETER
IN	INCHES
IPS	INTERNATIONAL PIPE STANDARD
IRR	IRRIGATION WATER
KW	KILOWATT

ABBR.	DESCRIPTION
LAV	LAVATORY
LF	LINEAR FEET
MAX	MAXIMUM
MIN	MINIMUM
MNTG	MOUNTING
MS	MOP SINK
NA	NOT APPLICABLE
NC	NORMALLY CLOSED
NIC	NOT IN CONTRACT
NO	NORMALLY OPEN
NSF	NATIONAL SANITATION FOUNDATION
NTS	NOT TO SCALE
OD	OUTSIDE DIAMETER
ORWL	OVERFLOW RAIN WATER LEADER
PDI	PLUMBING DRAINAGE INSTITUTE
PH	PHASE
PPP	PRECISION PLUMBING PRODUCTS
PSI	POUNDS PER SQUARE INCH
RD	ROOF DRAIN
RPM	REVOLUTIONS PER MINUTE
RWL	RAIN WATER LEADER
RX	REMOVE EXISTING
S	SANITARY
SAN	SANITARY
SH	SHOWER
SK	SINK
SL	SODA LINE
SPEC	SPECIFICATION
SQ	SQUARE
SS	STAINLESS STEEL
STD	STANDARD
ST	STORM
TDH	TOTAL DYNAMIC HEAD
TEMP	TEMPERATURE
TET	THERMAL EXPANSION TANK
TMV	THERMOSTATIC MIXING VALVE
TP	TRAP PRIMER
TYP	TYPICAL
UL	UNDERWRITER'S LABORATORY
U/G	UNDERGROUND
UNO	UNLESS NOTED OTHERWISE
UR	URINAL
V	VENT
VTR	VENT THROUGH ROOF
V/V	VALVE IN VERTICAL
VLV	VALVE
VOL	VOLUME
W	WATTS
W/	WITH
WC	WATER CLOSET
WCO	WALL CLEANOUT
WHA	WATER HAMMER ARRESTOR
WHY	WALL HYDRANT
WFU	WATER SUPPLY FIXTURE UNITS

PLUMBING GENERAL NOTES

1. DRAWINGS ARE DIAGRAMMATIC AND INDICATE GENERAL ARRANGEMENT OF SYSTEMS. PROVIDE COMPONENTS INDICATED IN DETAILS AND/OR RISER DIAGRAMS WHETHER OR NOT INDICATED ON PLANS AND VICE VERSA. WHERE A DISCREPANCY OR CONFLICT IS FOUND BETWEEN ONE DRAWING AND ANOTHER, OR BETWEEN A DRAWING AND APPLICABLE SPECIFICATIONS, NOTIFY THE COR IMMEDIATELY IN WRITTEN FORM. IN GENERAL, THE MOST STRINGENT REQUIREMENT SHALL GOVERN UNLESS THE DISCREPANCY CONFLICTS WITH APPLICABLE CODES OR OWNER'S DESIGN STANDARDS, WHEREIN THE CODE OR OWNER'S DESIGN STANDARDS SHALL GOVERN.
2. LOCATE VALVES IN ACCESSIBLE AREAS WHERE NECESSARY. (12"X12" MIN.)
3. COORDINATE ACTUAL LOCATIONS OF MECHANICAL FLOOR DRAINS WITH FINAL EQUIPMENT LOCATIONS ON SHOP DRAWINGS.
4. VENT PIPING SHOWN IS ONLY FOR DIAGRAMMATIC PURPOSES. COORDINATE VTRS WITH HVAC AIR INTAKES.
5. PROVIDE BACKWATER VALVES FOR CONDENSATE PIPING CONNECTIONS TO STORM SEWER.
6. PROVIDE PIPE MARKER FOR ALL PIPING ABOVE THE CEILING SPACES IN ACCORDANCE WITH DIVISION 22 SPECIFICATION SECTION. "IDENTIFICATION FOR PLUMBING PIPING AND EQUIPMENT".
7. LABEL VALVES ABOVE CEILINGS AND IN CONCEALED SPACES AT CEILING TILE WITH METAL CEILING TACKS INDICATING VALVE # AND TYPE OF WATER. (i.e.; BLUE= COLD WATER, LETTERING CW VLV1-001).
8. PROVIDE AND INSTALL WATER HAMMER ARRESTORS IN ACCORDANCE WITH PDI-WH201 IN ALL HW AND CW SUPPLY PIPING WITH QUICK CLOSING VALVES AS REQUIRED. AIR CHAMBERS ARE NOT ACCEPTABLE SUBSTITUTIONS.
9. PROVIDE THERMAL INSULATION FOR HOT WATER SUPPLY AND HOT WATER RETURN PIPING IN ACCORDANCE WITH THE ENERGY EFFICIENCY CODE FOR BUILDING CONSTRUCTION AND PER SPECIFICATIONS.
10. PROVIDE CLEANOUTS AT THE BASE OF EACH SANITARY STACK, SIZE CLEANOUTS TO MATCH THE PIPING SERVED. SPACE FLOOR CLEANOUTS AT 100'-0" MAX. ALSO PROVIDE CLEANOUTS IN HORIZONTAL CHANGE OF DIRECTION > 45°.
11. FIRE CAULK AND SLEEVE PENETRATIONS THROUGH FIRE RATED ASSEMBLIES. REFER TO LIFE SAFETY PLANS FOR RATED ASSEMBLY LOCATIONS. REFER TO ARCHITECTURAL SHEETS FOR DETAILS AND UL ASSEMBLY NUMBERS.
12. COORDINATE UNDERGROUND PIPING INVERT ELEVATIONS WITH STRUCTURAL FOOTING ELEVATIONS AND CIVIL INVERT CONNECTIONS PRIOR TO ANY UNDERGROUND PIPING INSTALLATIONS. IF FOOTINGS ARE IN CONFLICT AND WHERE A PIPING ROLL DOWN IS NOT POSSIBLE, COORDINATE WITH GENERAL CONTRACTOR FOR DROPS IN FOOTING AS REQUIRED.
13. COORDINATE CEILING PIPING AND ELEVATIONS IN SHOP DRAWINGS WITH ALL OTHER TRADES (I.E. HVAC, FIRE PROTECTION, ELECTRICAL, TELECOMM, STRUCTURAL, ETC.) PRIOR TO ANY INSTALLATION TO ENSURE PROPER CLEARANCES AND PENETRATIONS.
14. SLOPE SANITARY PIPING 2-1/2" OR LESS AT 1/4" PER FOOT. SLOPE SANITARY PIPING 3" AND LARGER AT 1/8" PER FOOT.
15. VALVES AND FITTINGS SHALL BE THE SAME SIZE AS THE PIPING WHERE THEY ARE LOCATED UNLESS NOTED OTHERWISE.
16. PROVIDE ALL NECESSARY SUPPORTING DEVICES FOR FIXTURES PER MANUFACTURER INSTALLATION INSTRUCTIONS.
17. PROVIDE ALL FLOOR DRAINS, FLOOR SINKS AND HUB DRAINS WITH DEEP SEAL P-TRAPS. ALL DRAINS NOT RECEIVING CONTINUOUS DISCHARGE SHALL BE PROVIDED WITH TRAP PRIMER CONNECTIONS TO ENSURE TRAP SEAL PROTECTION.
18. ROUGH-IN WASTE AND WATER SUPPLIES FOR FIXTURES AND PERFORM FINAL CONNECTIONS PER MANUFACTURER RECOMMENDATIONS.
19. THE CONTRACTOR SHALL BASE THEIR PROPOSAL UPON THE EQUIPMENT AS SCHEDULE OR SPECIFIED, USING THE MANUFACTURERS AND MODEL NUMBERS AS CALLED FOR IN THE SPECIFICATIONS AND SCHEDULED ON THE DRAWINGS. IF THE CONTRACTOR WISHES TO USE EQUIPMENT NOT SPECIFIED, THEY MUST SUBMIT SEPARATELY AT THE TIME OF BIDDING THE EQUIPMENT THEY WOULD SUBSTITUTE AND THE COST TO BE ADDED OR TO BE DEDUCTED FROM THEIR PROPOSAL.
20. COMPLY WITH THE AMERICANS WITH DISABILITIES ACT (ADA) ACCESSIBILITY GUIDELINES FOR BUILDINGS AND FACILITIES.
21. ALL AUTOMATIC CONTROL, PROTECTIVE OR SIGNAL DEVICES REQUIRED FOR THE OPERATION SPECIFIED, SHALL BE PROVIDED WITH ANY CONTROL WIRING AND INSTALLED PER MANUFACTURERS REQUIREMENTS.

APPLICABLE CODES

1. VA PLUMBING DESIGN MANUAL 2023 EDITION
2. VA SUSTAINABLE DESIGN MANUAL 2017 EDITION
3. VA INFRASTRUCTURE STANDARD FOR TELECOMMUNICATIONS SPACES 2021 EDITION
4. INTERNATIONAL BUILDING CODE: CONFORM IN STRICT COMPLIANCE TO THE INTERNATIONAL BUILDING CODE AND THE AMENDMENTS WHICH ARE ENFORCED BY THE VA.
   A. INTERNATIONAL BUILDING CODE (IBC) 2021 EDITION
   B. INTERNATIONAL PLUMBING CODE (IMC) 2021 EDITION
   C. INTERNATIONAL FUEL AND GAS CODE (IFGC) 2021 EDITION
   D. INTERNATIONAL ENERGY CONSERVATION CODE (IECC) 2021 EDITION
5. NATIONAL FIRE PROTECTION ASSOCIATION (NFPA), INCLUDING (BUT NOT LIMITED TO):
   A. NATIONAL ELECTRICAL CODE (NEC - NFPA 70) 2023 EDITION
   B. HEALTH CARE FACILITIES CODE (NFPA 99) 2021 EDITION
   C. LIFE SAFETY CODE (NFPA 101) 2021 EDITION
6. OCCUPATIONAL SAFETY AND HEALTH ACT (OSHA)
7. AMERICANS WITH DISABILITIES ACT (ADA)
8. AMERICAN SOCIETY OF TESTING AND MATERIALS (ASTM)
9. APPLICABLE REGULATORY REQUIREMENTS AND ADVISORY PRACTICES OF APPROPRIATE AUTHORITIES HAVING JURISDICTION (AHJs)
10. APPLICABLE STANDARDS, REGULATIONS, AND PRACTICES OF THE VA.

SHEET LIST

SHEET NUMBER	SHEET NAME
P-001	PLUMBING NOTES, LEGENDS, & SYMBOLS
P-101	PLUMBING PRESSURE AND GRAVITY PLANS - DATA CENTER
P-501	PLUMBING DETAILS AND SCHEDULES - DATA CENTER
P-601	PLUMBING ISOMETRICS - DATA CENTER

Revisions	Date

CONSULTANT

Above Group
ENGINEERING. DESIGN. CONSULTING.
www.abovegroupinc.com
COA/CA Lic. No. 31120
305 East Dr., Suite H,
Melbourne, Florida 32904
PH: 321.345.9026

ARCHITECT/ENGINEER OF RECORD

RDC◆JPA ARCHITECTURE
524 Fernwood Drive, Altamonte Springs, Florida 32701 | www.rdcjpa.com | 800.362.1523

STAMP

STATE OF TEXAS
CHRISTOPHER BAILEY
130679
LICENSED
PROFESSIONAL ENGINEER
Chris Bailey

Office of Construction and Facilities Management

VA U.S. Department of Veterans Affairs

Drawing Title	PLUMBING NOTES, LEGENDS, & SYMBOLS
Phase	BID DOCUMENTS
Project Title	GAINESVILLE DATA CENTER
Project Number	573-21-106
Building Number	
Approved:	STATION CHIEF - EDWIN BURNETT
	FULLY SPRINKLERED
Location	GAINESVILLE, FL
Issue Date	04.20.2026
Checked	GSC
Drawn	AJZ
Drawing Number	P-001

Autodesk Docs://Florida, Gainesville VA\122085_VA Gainesville_Data Ctr_R25_MEPT.rvt
4/17/2026 4:11:46 PM

VA FORM 08 - 6231

CODED NOTES:

1. SCUPPER WITH DOWNSPOUT.
2. PROVIDE CONDENSATE DRAIN PIPING, FROM INDOOR UNITS 11-IDU-1 AND 11-IDU-2, PUMPED TO THE MOP SINK P-502 AS SHOWN ON ENLARGED PLAN.

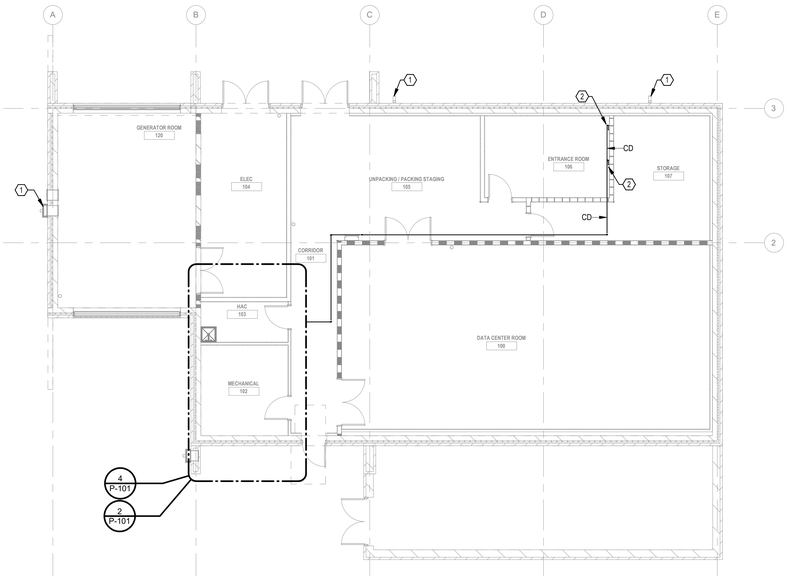

1 DATA CENTER - FIRST FLOOR- PLUMBING PLAN
1/8" = 1'-0"

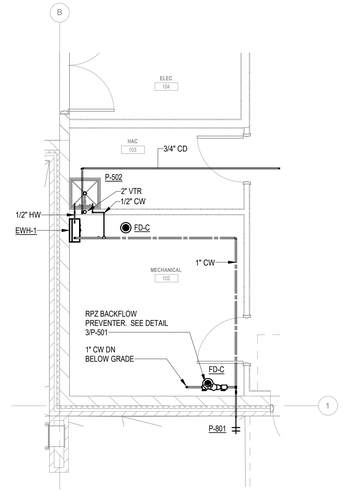

2 DATA CENTER - FIRST FLOOR- PLUMBING ENLARGED PLAN
1/4" = 1'-0"

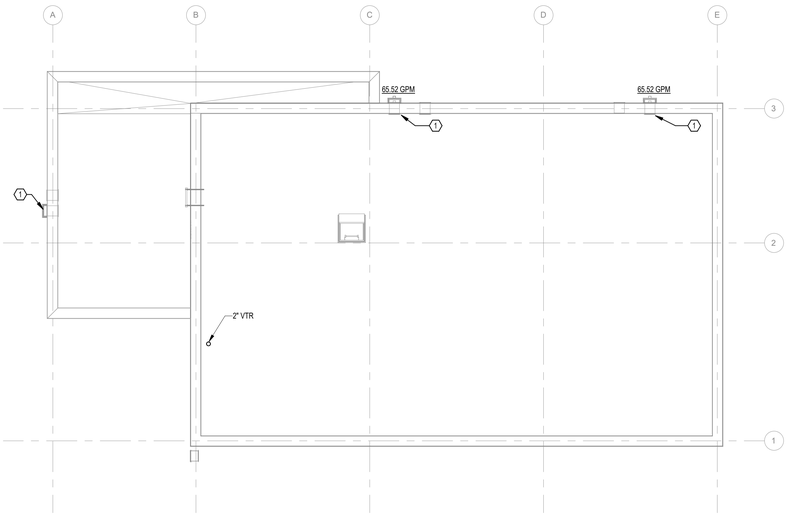

3 DATA CENTER - ROOF - PLUMBING PLAN
1/8" = 1'-0"

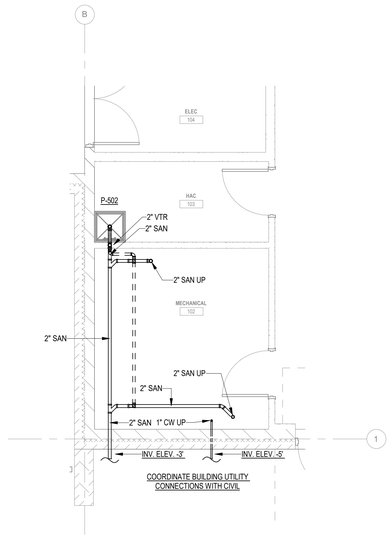

4 DATA CENTER - UNDERFLOOR- PLUMBING ENLARGED PLAN
1/4" = 1'-0"

0 2' 4' 8' 12'
1/4" = 1'-0"

0 4' 8' 16' 24'
1/8" = 1'-0"

N

Revisions	Date

CONSULTANT

Above Group
ENGINEERING. DESIGN. CONSULTING.

www.abovegroupinc.com
COA/CA Lic. No. 31120

305 East Dr., Suite H,
Melbourne, Florida 32904
PH: 321.345.9026

ARCHITECT/ENGINEER OF RECORD

RDC JPA ARCHITECTURE

524 Fernwood Drive, Altamonte Springs, Florida 32701 | www.rdcjpa.com | 800.362.1523

STAMP

STATE OF TEXAS
CHRISTOPHER BAILEY
130679
LICENSED
PROFESSIONAL ENGINEER

Chris Bailey

Office of Construction and Facilities Management

VA U.S. Department of Veterans Affairs

Drawing Title: PLUMBING PRESSURE AND GRAVITY PLANS - DATA CENTER	Phase: BID DOCUMENTS	Project Title: GAINESVILLE DATA CENTER	Project Number: 573-21-106
			Building Number: 43
Approved: STATION CHIEF - EDWIN BURNETT	FULLY SPRINKLERED	Location: GAINESVILLE, FL	Drawing Number: P-101
		Issue Date: 04.20.2026 / Checked: GSC / Drawn: AJZ	

VA FORM 08 - 6231

Autodesk Docs://Florida, Gainesville VA/122085_VA Gainesville_Data Ctr_R25_MEPT.rvt

4/17/2026 4:11:49 PM

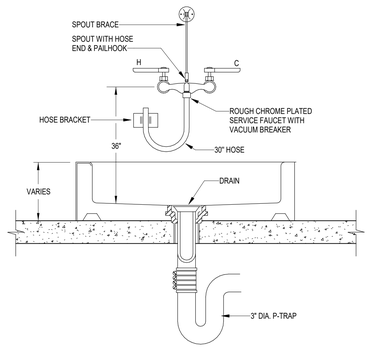

1 MOP SINK DETAIL
N.T.S.

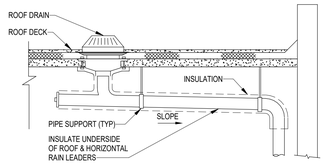

2 ROOF DRAIN - INSULATED
N.T.S.

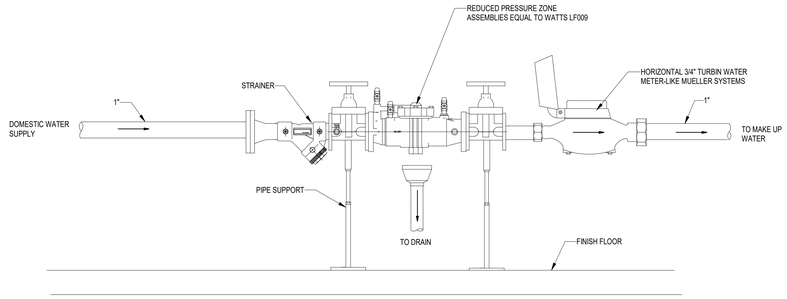

3 REDUCE PRESSURE ZONE ASSEMBLIES DETAIL
N.T.S.

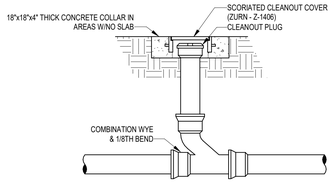

4 EXTERIOR CLEANOUT
N.T.S.

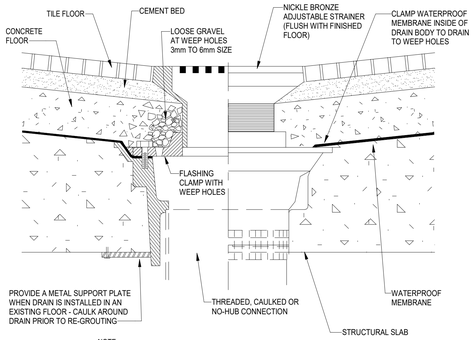

NOTE:

1. SLOPE MEMBRANE LINER 2% TO DRAIN.
2. PROVIDE FLASHING MEMBRANE WHEN DRAIN IS INSTALLED IN A NON MEMBRANE FLOOR

5 TYPE "C" FLOOR DRAIN DETAIL
N.T.S.

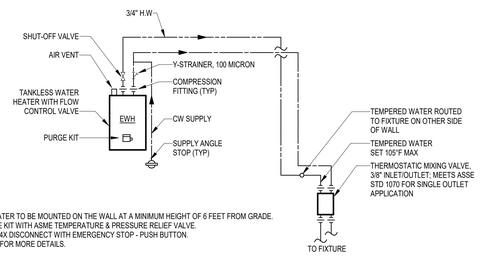

NOTE:

1. THE WATER HEATER TO BE MOUNTED ON THE WALL AT A MINIMUM HEIGHT OF 6 FEET FROM GRADE.
2. PROVIDE PURGE KIT WITH ASME TEMPERATURE & PRESSURE RELIEF VALVE.
3. PROVIDE NEMA 4X DISCONNECT WITH EMERGENCY STOP - PUSH BUTTON.
4. SEE SCHEDULE FOR MORE DETAILS.

6 ELECTRIC WATER HEATER DETAIL
N.T.S.

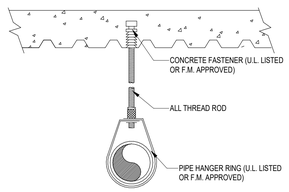

7 CONCRETE HANGER DETAIL
N.T.S.

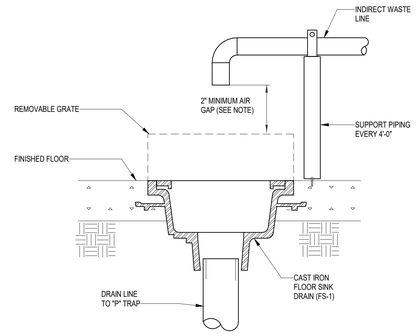

NOTE:

THE AIR GAP BETWEEN THE INDIRECT WASTE PIPEAND THE FLOOD LEVEL RIM OF THE WASTE RECEPTOR SHALL BE A MINIMUM OF TWICE THE EFFECTIVEOPENING OF THE INDIRECT WASTE PIPE.

8 CONDENSATE FLOOR DRAIN DETAIL
N.T.S.

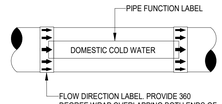

DETAIL NOTES:

A. PROVIDE A PIPE LABEL FOR EACH PIPE FUNCTION.

B. PROVIDE AT LEAST ONE LABEL ON EACH PIPE FOR EVERY ROOM THE PIPE PASSES THROUGH.

C. PROVIDE LABELS IN LARGE SPACES ON MAXIMUM 20' CENTERS FOR EVERY PIPE UNLESS OTHERWISE NOTED IN THE SPECIFICATIONS.

D. LABELS TO BE LOCATED IN AN EASILY VISIBLE LOCATION AS THEY WOULD NORMALLY BE SEEN. IE. ON THE BOTTOM HALF OF PIPES IN THE AIR AND ON THE TOP HALF OR SIDES OF PIPES MOUNTED LOW.

E. LABELS SHALL BE, COLOR CODED, PRE-PRINTED, SELF ADHESIVE VINYL.

F. SEE SPECIFICATION FOR OTHER REQUIREMENTS AND LIST OF PIPE FUNCTIONS.

9 PIPING IDENTIFICATION LABEL DETAIL
N.T.S.

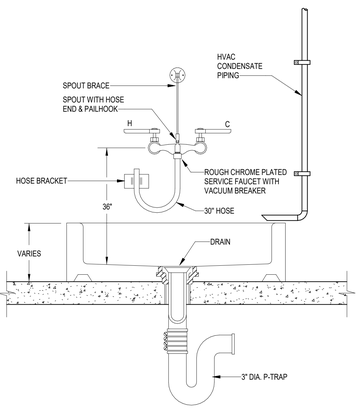

10 CONDENSATE TO MOP SINK DETAIL
N.T.S.

PLUMBING FIXTURE SCHEDULE

MARK	FIXTURE	THERMOSTATIC MIXING VALVE BASIS OF DESIGN	CONNECTION SIZES				FIXTURE UNITS				FLUSH VALVE/FAUCET TYPE			
			WASTE PIPE (INCHES)	VENT PIPE (INCHES)	COLD WATER (INCHES)	HOT WATER (INCHES)	WASTE FIXTURE UNITS	WATER FIXTURE UNITS	COLD WATER FIXTURE UNITS	HOT WATER FIXTURE UNITS	MANUAL HANDLE	HARD WIRED SENSOR	BATTERY SENSOR	FOOT PEDAL
FD-C	FLOOR DRAIN	FD-100-A	2	2	-	-	2	-	-	-	-	-	-	-
P-902	MOP SINK	WATTS - LFLSG-B-M2	2	2	3/4	3/4	2	3	2.25	2.25	Y	-	-	-
P-801	HOSE BIBB	WATTS - HY-725	-	-	3/4	-	-	3	2.25	-	Y	-	-	-

INSTANTANEOUS WATER HEATER SCHEDULE

MARK	MANUFACTURER	MODEL NO.	KW PER ELEMENT	NUMBER OF ELEMENTS	TOTAL KW	ACTIVATION GPM	SIZE (L"xW"xH")	VOLTS/PHASE/HERTZ
EWH-1	EEMAX	XTP016480	16	1	16	.5	30x24x13.5	480/3/60

NOTES:
1. PROVIDE SINGLE POINT ELECTRICAL CONNECTION.

Revisions	Date

CONSULTANT

Above Group
ENGINEERING. DESIGN. CONSULTING.
www.abovegroupinc.com
COA/CA Lic. No. 31120
305 East Dr., Suite H,
Melbourne, Florida 32904
PH: 321.345.9026

ARCHITECT/ENGINEER OF RECORD

RDC◆JPA ARCHITECTURE
524 Fernwood Drive, Altamonte Springs, Florida 32701 | www.rdcjpa.com | 800.362.1523

STAMP

STATE OF TEXAS · CHRISTOPHER BAILEY · 130679 · LICENSED PROFESSIONAL ENGINEER

Chris Bailey

Office of Construction and Facilities Management

VA U.S. Department of Veterans Affairs

Drawing Title	PLUMBING DETAILS AND SCHEDULES - DATA CENTER
Phase	BID DOCUMENTS
Project Title	GAINESVILLE DATA CENTER
Project Number	573-21-106
Building Number	
Approved:	STATION CHIEF - EDWIN BURNETT
	FULLY SPRINKLERED
Location	GAINESVILLE, FL
Issue Date	04.20.2026
Checked	GSC
Drawn	AJZ
Drawing Number	P-501

Autodesk Docs://Florida_Gainesville VA122085_VA Gainesville_Data Ctr_R25_MEPT.rvt
4/17/2026 4:11:51 PM

VA FORM 08 - 6231

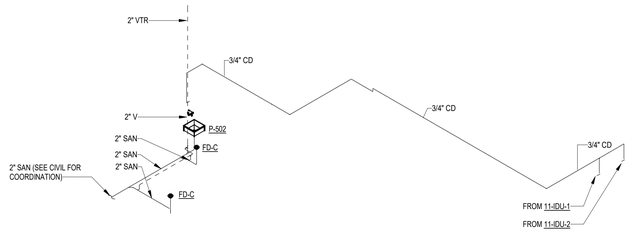

1 Gravity Isometric
N.T.S.

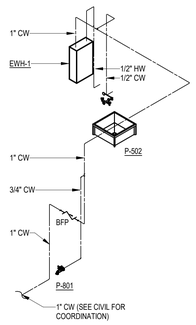

2 Pressure Isometric
N.T.S.

Autodesk Docs://Florida, Gainesville VA\12085_VA Gainesville_Data Ctr_R25_MEPT.rvt
4/17/2026 4:11:55 PM

Revisions	Date

CONSULTANT

Above Group
ENGINEERING. DESIGN. CONSULTING.
www.abovegroupinc.com
COA/CA Lic. No. 31120
305 East Dr., Suite H,
Melbourne, Florida 32904
PH: 321.345.9026

ARCHITECT/ENGINEER OF RECORD

RDC◆JPA
ARCHITECTURE
524 Fernwood Drive, Altamonte Springs, Florida 32701 | www.rdcjpa.com | 800.362.1523

STAMP

STATE OF TEXAS
CHRISTOPHER BAILEY
130679
LICENSED
PROFESSIONAL ENGINEER
Chris Bailey

Office of Construction and Facilities Management

VA U.S. Department of Veterans Affairs

Drawing Title: PLUMBING ISOMETRICS - DATA CENTER	Phase: BID DOCUMENTS	Project Title: GAINESVILLE DATA CENTER	Project Number: 573-21-106
Approved: STATION CHIEF - EDWIN BURNETT	FULLY SPRINKLERED	Location: GAINESVILLE, FL	Building Number
		Issue Date: 04.20.2026 / Checked: GSC / Drawn: AJZ	Drawing Number: P-601

VA FORM 08 - 6231

HVAC SYMBOL LEGEND

SYMBOL	DESCRIPTION
	-CEILING DIFFUSER, ROUND NECK (CEILING DIFFUSERS ARE 4-WAY THROW UNO)
	-CEILING RETURN
	-CEILING EXHAUST
	-CEILING DIFFUSER, RECTANGULAR OR SQUARE NECK (CEILING DIFFUSERS ARE 4-WAY THROW UNO)
	-SUPPLY DIFFUSER OR GRILLE (VERTICAL MOUNT, SIDEWALL)
	-RETURN/EXHAUST REGISTER OR GRILLE (VERTICAL MOUNT, SIDEWALL)
	-FLEXIBLE DUCT
T	-THERMOSTAT / TEMPERATURE SENSOR
H	-HUMIDISTAT / HUMIDITY SENSOR
R	-REFRIGERANT SENSOR
	-DUCT SMOKE DETECTOR
H	-HUMIDITY SENSOR (DUCT MOUNTED)
M	-MOTORIZED CONTROL DAMPER
F	-AIRFLOW SENSOR/STATION
T	-TEMPERATURE SENSOR
SP	-STATIC PRESSURE SENSOR
BD	-BACKDRAFT DAMPER
	-CEILING MOUNTED ACCESS DOOR

SYMBOL	DESCRIPTION
VD	-MANUAL BALANCING DAMPER
	-DOOR GRILLE
UC	-UNDERCUT DOOR
	-TRANSITION, CONCENTRIC
	-RECTANGLE-TO-ROUND TAKE-OFF
	-STANDARD BRANCH TAKE-OFF
	-SPIN-IN TAKE-OFF
	-RECTANGULAR/ROUND BRANCH TAKE-OFF OR ROUND/ROUND BRANCH TAKE-OFF
24x12	-NEW DUCTWORK, FIRST DIMENSION IS SIDE SHOWN
UP DN	-CHANGE OF ELEVATION
DOWN UP	-DUCT ELBOW, SUPPLY OR OUTSIDE AIR
	-DUCT ELBOW, EXHAUST AIR
	-DUCT ELBOW, RETURN AIR

HVAC ABBREVIATIONS

ADA	-AMERICANS WITH DISABILITIES ACT
AFF	-ABOVE FINISHED FLOOR
AFR	-ABOVE FINISHED ROOF
AHU	-AIR HANDLING UNIT
AP	-ACCESS PANEL
APPROX	-APPROXIMATE
ASTM	-AMERICAN STANDARDS TESTING MATERIALS
BAS	-BUILDING AUTOMATION SYSTEM
BOP	-BOTTOM OF PIPE
BHP	-BRAKE HORSEPOWER
BFV	-BUTTERFLY VALVE
BTU	-BRITISH THERMAL UNIT
CAV	-CONSTANT AIR VOLUME
CFM	-CUBIC FEET PER MINUTE
CD	-CONDENSATE
CL	-CENTER LINE
CO	-CLEAN OUT
COR	-CONTRACTING OFFICER'S REPRESENTATIVE
CRAC	-COMPUTER ROOM AIR CONDITIONER
CU	-CONDENSING UNIT
DB	-DRY BULB
DDC	-DIRECT DIGITAL CONTROLS
DN	-DOWN
EA	-EXHAUST AIR
EAT	-ENTERING AIR TEMPERATURE
ECC	-ENGINEERING CONTROL CENTER
EER	-ENERGY EFFICIENCY RATING
EQUIP	-EQUIPMENT
ESP	-EXTERNAL STATIC PRESSURE
ETR	-EXISTING TO REMAIN
EWT	-ENTERING WATER TEMPERATURE
EX	-EXISTING
°F	-DEGREES FAHRENHEIT
FAS	-FIRE ALARM SYSTEM
FCU	-FAN COIL UNIT
FD	-FLOOR DAMPER
FE	-FLUE EXHAUST
FLA	-FULL LOAD AMPS
FOF	-FUEL OIL FILL
FPM	-FEET PER MINUTE
FT	-FEET
GPM	-GALLONS PER MINUTE
HP	-HORSEPOWER
HR	-HOUR
HZ	-HERTZ
IDU	-INDOOR UNIT
IPLV	-INTEGRATED PART-LOAD VALUE
IN	-INCHES
KW	-KILOWATT
LAT	-LEAVING AIR TEMPERATURE
LWT	-LEAVING WATER TEMPERATURE

MAX	-MAXIMUM
MBH	-THOUSAND BTUs PER HOUR
MCA	-MINIMUM CIRCUIT AMPS
MIN	-MINIMUM
MOCP	-MAXIMUM OVER CURRENT PROTECTION
MOD	-MOTORIZED CONTROL DAMPER
NA	-NOT APPLICABLE
NC	-NORMALLY CLOSED
NIC	-NOT IN CONTRACT
NO	-NORMALLY OPEN
NTS	-NOT TO SCALE
OA	-OUTSIDE AIR
OAT	-OUTSIDE AIR TEMPERATURE
ODU	-OUTDOOR UNIT
PH	-PHASE
PRV	-PRESSURE REDUCING VALVE
PRS	-PRESSURE REDUCING STATION
PSI	-POUNDS PER SQUARE INCH
PSIG	-PSI GAUGE
PTAC	-PACKAGED TERMINAL AIR CONDITIONER
PVC	-POLYVINYL CHLORIDE PIPE
RA	-RETURN AIR
RH	-RELATIVE HUMIDITY
RHP	-ROOFTOP HEAT PUMP
RPM	-REVOLUTIONS PER MINUTE
RS/L	-REFRIGERANT SUCTION & LIQUID LINES
RTU	-ROOFTOP AIR CONDITIONING UNIT
RX	-REMOVE EXISTING
SA	-SUPPLY AIR
SF	-SQUARE FEET
SP	-STATIC PRESSURE
SPEC	-SPECIFICATION
SS	-STAINLESS STEEL
STD	-STANDARD
TA	-TRANSFER AIR
TDH	-TOTAL DYNAMIC HEAD
TEMP	-TEMPERATURE
TSP	-TOTAL STATIC PRESSURE
TU	-TERMINAL UNIT
TYP	-TYPICAL
UL	-UNDERWRITER'S LABORATORY
U/G	-UNDERGROUND
UNO	-UNLESS NOTED OTHERWISE
V/PH	-VOTS/PHASE
VA	-U.S. DEPARTMENT OF VETERANS AFFAIRS
VAV	-VARIABLE AIR VOLUME
VFD	-VARIABLE FREQUENCY DRIVE
VRF	-VARIABLE REFRIGERANT FLOW
W	-WATTS
W/	-WITH
WB	-WET BULB

DESIGN CRITERIA

LOCATION	-GAINESVILLE, FL
WEATHER STATION	-GAINESVILLE REGIONAL AP
SUMMER DESIGN (0.4%)	-93.4°F DB / 76.4°F WB
DEHUMIDIFICATION (0.4%)	-82.8°F DB / 77.3°F DP
WINTER DESIGN (99.6%)	-29.6°F DB
ANNUAL EXTREME (MEAN)	-97.3°F DB MAX. / 23.4°F DB MIN.
INDOOR RELATIVE HUMIDITY	-60% MAX. / 30% MIN.
TELECOM ROOM SETPOINTS	-81°F DB MAX. / 64°F DB MIN.
TELEPHONE ROOM SETPOINTS	-81°F DB MAX. / 64°F DB MIN.
DATA CENTER SETPOINTS	-79°F DB MAX. / 72°F DB MIN.

BASIC MATERIALS

- EXISTING TO BE REMOVED (HEAVY, DASHED LINE)
- EXISTING TO REMAIN (THIN, HALFTONED, SOLID LINE)
- NEW (HEAVY, SOLID LINE)

MECHANICAL GENERAL NOTES

1. DRAWINGS ARE DIAGRAMMATIC AND INDICATE GENERAL ARRANGEMENT OF SYSTEMS. PROVIDE COMPONENTS INDICATED IN DETAILS, RISER DIAGRAMS, CONTROL DIAGRAMS, AND/OR FLOW DIAGRAMS WHETHER OR NOT INDICATED ON PLANS AND VICE VERSA. WHERE A DISCREPANCY OR CONFLICT IS FOUND BETWEEN ONE DRAWING AND ANOTHER, OR BETWEEN A DRAWING AND APPLICABLE SPECIFICATIONS, NOTIFY THE COR IMMEDIATELY IN WRITTEN FORM. IN GENERAL, THE MOST STRINGENT REQUIREMENT SHALL GOVERN UNLESS THE DISCREPANCY CONFLICTS WITH APPLICABLE CODES OR OWNER'S DESIGN STANDARDS, WHEREIN THE CODE OR OWNER'S DESIGN STANDARDS SHALL GOVERN.
2. CONNECTION TO EQUIPMENT SHALL BE VERIFIED WITH MANUFACTURER'S CERTIFIED DRAWINGS. TRANSITIONS TO ALL EQUIPMENT SHALL BE VERIFIED AND PROVIDED FOR EQUIPMENT FURNISHED.
3. DIMENSIONS SHALL BE FIELD-VERIFIED AND COORDINATED PRIOR TO PROCUREMENT OR FABRICATION. COORDINATE THE WORK WITH OTHER TRADES INVOLVED. FIELD MODIFICATIONS SUCH AS OFFSETS IN PIPING OR DUCTWORK (INCLUDING DIVIDED DUCTWORK) NEEDED DUE TO OBSTRUCTIONS OR INTERFERENCES SHALL BE PROVIDED AT NO ADDITIONAL COST.
4. DUCT CONSTRUCTION SHALL BE IN ACCORDANCE WITH THE LATEST EDITION OF THE SMACNA HVAC DUCT CONSTRUCTION STANDARD.
5. PROVIDE 1.5R ELBOWS IN DUCTWORK AS INDICATED. IF 1.5R ELBOWS DO NOT FIT, PROVIDE 1.0R ELBOWS. IF 1.0R ELBOWS DO NOT FIT, PROVIDE 90 DEGREE RECTANGULAR DUCT ELBOWS WITH TURNING VANES.
6. LOCATE THERMOSTATS, TEMPERATURE SENSORS, HUMIDISTATS, AND HUMIDITY SENSORS AT 48" +/- 6" ABOVE FINISHED FLOOR UNLESS NOTED OTHERWISE. COORDINATE LOCATIONS WITH OTHER EQUIPMENT, FURNITURE, AND DOOR SWINGS.
7. ALL EQUIPMENT, DUCTWORK, ETC., SHALL BE SUPPORTED AS DETAILED AND/OR SPECIFIED. PROVIDE ADDITIONAL SUPPORTS AS REQUIRED TO PROVIDE A VIBRATION-FREE, RIGID INSTALLATION.
8. ALL DUCT SIZES SHOWN ARE INSIDE CLEAR DIMENSIONS.
9. REFER TO TYPICAL DETAILS FOR PIPING AND INSTALLATION OF EQUIPMENT.
10. TRAPPED CONDENSATE DRAINS FROM ALL MECHANICAL EQUIPMENT SHALL BE PROVIDED FOR PROPER DRAINAGE TO SUIT EQUIPMENT FURNISHED.
11. ACCESS PANELS IN DUCTWORK AND CEILINGS SHALL BE PROVIDED WHERE REQUIRED FOR OPERATION, BALANCING OR MAINTENANCE OF ALL MECHANICAL EQUIPMENT.
12. ALL DUCTWORK AND PIPING IS SHOWN SCHEMATICALLY. PROVIDE ALL TRANSITIONS, TURNING VANES, ELBOWS, FITTINGS, ETC., TO ALLOW SMOOTH FLOWS. ALL SPLIT DUCT FITTINGS SHALL TRANSITION TO FULL SIZE OF THE SUM OF BOTH BRANCHES, UPSTREAM OF SPLIT.
13. PROVIDE FLEXIBLE DUCT CONNECTIONS ON ALL DUCTWORK CONNECTING TO FANS, AIR HANDLING UNITS, AND FAN COIL UNITS.
14. PROVIDE TRANSITIONS AT DIFFUSER NECKS AS REQUIRED TO MATCH SIZES OF FLEX DUCTS TO BE CONNECTED.
15. SLEEVE AND SEAL ALL PIPING PENETRATIONS THROUGH BUILDING PARTITIONS.
16. MAINTAIN CLEARANCE OF A MINIMUM OF 6" BETWEEN DUCTWORK, PIPING, EQUIPMENT, ETC., AND ALL FIRE RATED AND FIRE/SMOKE RATED PARTITIONS, TO ALLOW FOR INSPECTIONS OF RATED WALLS.
17. UNLESS OTHERWISE NOTED, ALL EQUIPMENT AND VALVE DRAINS SHALL BE INDEPENDENTLY PIPED FULL SIZE TO THE NEAREST PLUMBING DRAIN.

APPLICABLE CODES

1. VA HVAC DESIGN MANUAL 2023 EDITION
2. VA PLUMBING DESIGN MANUAL 2023 EDITION
3. VA FIRE PROTECTION DESIGN MANUAL 2023 EDITION
4. VA INFRASTRUCTURE STANDARD FOR TELECOMMUNICATIONS SPACES 2021 EDITION
5. HEFP SEP (SOCAMES 6) DESIGN ALERT 8
6. INTERNATIONAL BUILDING CODE: CONFORM IN STRICT COMPLIANCE TO THE INTERNATIONAL BUILDING CODE AND THE AMENDMENTS WHICH ARE ENFORCED BY THE LOCAL AUTHORITY HAVING JURISDICTION.
   A. INTERNATIONAL BUILDING CODE (IBC) 2021 EDITION
   B. INTERNATIONAL MECHANICAL CODE (IMC) 2021 EDITION
   C. INTERNATIONAL PLUMBING CODE (IPC) 2021 EDITION
   D. INTERNATIONAL ENERGY CONSERVATION CODE (IECC) 2021 EDITION
7. AMERICAN SOCIETY OF HEATING, REFRIGERATION AND AIR-CONDITIONING ENGINEERS (ASHRAE):
   A. SAFETY STANDARD FOR REFRIGERATION SYSTEMS (ASHRAE 15 & 34) 2022 EDITION
   B. VENTILATION FOR ACCEPTABLE INDOOR AIR QUALITY (ASHRAE 62.1) 2022 EDITION
   C. ENERGY STANDARD FOR BUILDINGS (ASHRAE 90.1) 2022 EDITION
   D. VENTILATION OF HEALTH CARE FACILITIES (ASHRAE 170) 2021 EDITION
8. NATIONAL FIRE PROTECTION ASSOCIATION (NFPA), INCLUDING (BUT NOT LIMITED TO):
   A. COMPRESSED GASES AND CRYOGENIC FLUIDS CODE, NFPA 55 2023 EDITION
   B. NATIONAL ELECTRICAL CODE (NEC) 2023 EDITION
   C. NATIONAL FIRE ALARM CODE (NFPA 72) 2022 EDITION
   D. STANDARD FOR THE INSTALLATION OF AIR-CONDITIONING AND VENTILATING SYSTEMS (NFPA 90A) 2021 EDITION
   E. HEALTH CARE FACILITIES CODE (NFPA 99) 2021 EDITION
   F. LIFE SAFETY CODE (NFPA 101) 2021 EDITION
   G. CLEAN AGENT FIRE EXTINGUISHING SYSTEMS (NFPA 2001) 2022 EDITION
9. AMERICAN NATIONAL STANDARDS INSTITUTE (ANSI), INCLUDING (BUT NOT LIMITED TO):
   A. OCCUPATIONAL HEALTH AND SAFETY MANAGEMENT SYSTEMS (Z10) 2019 EDITION
10. SHEET METAL AND AIR CONDITIONING CONTRACTORS' NATIONAL ASSOCIATION (SMACNA)
11. OCCUPATIONAL SAFETY AND HEALTH ACT (OSHA)
12. AMERICANS WITH DISABILITIES ACT (ADA)
13. AMERICAN SOCIETY OF TESTING AND MATERIALS (ASTM)
14. AIR MOVEMENT AND CONTROL ASSOCIATION (AMCA)
15. APPLICABLE STANDARDS, REGULATIONS, AND PRACTICES OF THE VA SUSTAINABLE DESIGN MANUAL 2017 EDITION

DRAWING SYMBOLS

- 1 / H1 — VIEW NUMBER / SHEET NUMBER
- A / H1 — SECTION LETTER / DRAWING NUMBER WHERE SHOWN
- 1 — REVISION REFERENCE
- 1 — SHEET NOTE CALLOUT
- CONNECT TO EXISTING
- DEMOLISH TO POINT INDICATED
- BUILDING NO. WHERE EQUIPMENT IS LOCATED.
- LEVEL EQUIPMENT LOCATED ON / LEVEL IT SERVES
- EQUIPMENT ABBREVIATION. AN "EX" SHOWN IN FRONT OF EQUIPMENT TAGS NOTIFIES THAT EQUIPMENT IS EXISTING.
- UNIT NUMBER
- B64-3-IDU-1-300 — ROOM NUMBER
- TYPICAL UNIT NUMBER; IDU NO. 1; SERVING ROOM 300, LOCATED ON LEVEL 3, LOCATED IN BLDG. 2
- BUILDING NO. WHERE EQUIPMENT IS LOCATED
- ITEM (TERMINAL UNIT SHOWN)
- SERVED BY AIR HANDLER UNIT NO. 8
- ITEM NUMBER (TERMINAL UNIT NO. 1)
- B19-TU-8-1-200 — ROOM NUMBER
- TYPICAL UNIT NUMBER; TU NO. 1, SERVING ROOM 200, SERVED BY AHU-8, LOCATED IN BLDG. 19
- DEVICE MARK AND NUMBER (S = SUPPLY, R = RETURN, E = EXHAUST)
- S1 200 — DEVICE FLOW RATE (CFM)
- TYPICAL AIR DISTRIBUTION DEVICE TAG
- DUCT DIMENSION (INCHES). FIRST DIMENSION IS SIDE SHOWN.
- 12X10 SA — SYSTEM TYPE (SA = SUPPLY AIR , RA = RETURN AIR, OA = OUTSIDE AIR, EA = EXHAUST AIR)
- TYPICAL DUCTWORK TAG

PIPING LEGEND

SYMBOL	DESCRIPTION
HWS	-HEATING HOT WATER SUPPLY
HWR	-HEATING HOT WATER RETURN
CHWS	-CHILLED WATER SUPPLY
CHWR	-CHILLED WATER RETURN
CD	-CONDENSATE
R	-REFRIGERANT LIQUID AND SUCTION LINES
	-FLOW DIRECTION
	-FLANGES
	-UNION
	-CONCENTRIC REDUCER
	-AUTOMATIC AIR VENT
	-MANUAL VENT
	-INLINE PUMP
	-CAP
	-HOSE CONNECTION
	-THERMOMETER
	-PRESSURE GAUGE WITH SHUTOFF
	-TEST PLUG (PRESSURE/TEMPERATURE)
	-FLOW SWITCH
	-PRESSURE SWITCH
EQUIP.	-P-TRAP
	-ELBOW, 90°
	-ELBOW, 45°
R R	-45° PIPE RISE (R)/DROP (D)

SYMBOL	DESCRIPTION
	-BALL VALVE
	-GATE VALVE
	-GLOBE VALVE
	-CHECK VALVE
	-STRAINER
	-CIRCUIT SETTER VALVE
M	-MOTORIZED ACTUATOR
	-SOLENOID VALVE (2-POSTION W/ ACTUATOR)
	-ELBOW, TURNED DOWN
	-ELBOW, TURNED UP
	-TEE, OUTLET DOWN
	-TEE, OUTLET UP
	-TEE, SIDE CONNECTION

CONTROLS LEGEND

SYMBOL	DESCRIPTION
A	-ALARM
	-TEMPERATURE SENSOR
	-RELATIVE HUMIDITY SENSOR
	-PUSH-BUTTON OVER-RIDE SWITCH
	-PRESSURE SENSOR
	-HARD-WIRED INTERLOCK
	-DRY CONTACT
CS	-CURRENT SENSING STATUS
S	-DUCT SMOKE DETECTOR
	-IMMERSION TEMPERATURE TRANSMITTER W/ THERMOWELL
R	-REFRIGERANT SENSOR
H	-SPACE HUMIDISTAT / HUMIDITY SENSOR
T	-SPACE THERMOSTAT SENSOR
P	-SPACE PRESSURE SENSOR
	-DUCT MOUNTED TEMPERATURE SENSOR
F	-AIR FLOW SENSOR
	-INDICATES AVERAGING ELEMENT SENSOR
	-INDICATES PROBE SENSOR

SYMBOL	DESCRIPTION
	-OPPOSED BLADE DAMPER
	-PARALLEL BLADE DAMPER
	-MAGNEHELIC DIFFERENTIAL PRESSURE GAUGE
24VAC	-ACTUATOR W / 24VAC OR 120VAC AS INDICATED
24VAC	-TWO POSITION VALVE W / 24VAC OR 120VAC AS INDICATED
AFS-X	-AIRFLOW SENSOR
D-X	-DAMPER
DPS-X	-DIFFERENTIAL PRESSURE SENSOR
ECC-X	-ENGINEERING CONTROL CENTER
FT-X	-FLOW TRANSMITTER
H-X	-HUMIDITY TRANSMITTER
IT-X	-CURRENT TRANSMITTER
LT-X	-LEVEL TRANSMITTER
PT-X	-PRESSURE TRANSMITTER
PDT-X	-PRESSURE DIFFERENTIAL TRANSMITTER
SPS-X	-STATIC PRESSURE SWITCH
TT-X	-TEMPERATURE TRANSMITTER
VC-X	-VALVE POSITION CONTROLLER
WFS-X	-WATER FLOW SWITCH DIGITAL

PLUMBING NOTES

1. DRAWINGS ARE DIAGRAMMATIC AND INDICATE GENERAL ARRANGEMENT OF SYSTEMS. PROVIDE COMPONENTS INDICATED IN DETAILS AND/OR RISER DIAGRAMS WHETHER OR NOT INDICATED ON PLANS AND VICE VERSA. WHERE A DISCREPANCY OR CONFLICT IS FOUND BETWEEN ONE DRAWING AND ANOTHER, OR BETWEEN A DRAWING AND APPLICABLE SPECIFICATIONS, NOTIFY THE COR IMMEDIATELY IN WRITTEN FORM. IN GENERAL, THE MOST STRINGENT REQUIREMENT SHALL GOVERN UNLESS THE DISCREPANCY CONFLICTS WITH APPLICABLE CODES OR OWNER'S DESIGN STANDARDS, WHEREIN THE CODE OR OWNER'S DESIGN STANDARDS SHALL GOVERN.
2. LOCATE VALVES IN ACCESSIBLE AREAS WHERE NECESSARY. (12"X12" MIN.)
3. COORDINATE ACTUAL LOCATIONS OF MECHANICAL FLOOR DRAINS WITH FINAL EQUIPMENT LOCATIONS ON SHOP DRAWINGS.
4. VENT PIPING SHOWN IS ONLY FOR DIAGRAMMATIC PURPOSES. COORDINATE VTRS WITH HVAC AIR INTAKES.
5. PROVIDE BACKWATER VALVES FOR CONDENSATE PIPING CONNECTIONS TO STORM SEWER.
6. ROUTE WATER HEATER T&P VALVE PIPING TO BUILDING EXTERIOR WHERE POSSIBLE. ALTERNATE DISCHARGE LOCATIONS WILL BE MOP SINKS OR ADJACENT FLOOR DRAINS ONLY.
7. PROVIDE PIPE MARKER FOR ALL PIPING ABOVE THE CEILING SPACES IN ACCORDANCE WITH DIVISION 22 SPECIFICATION SECTION. "IDENTIFICATION FOR PLUMBING PIPING AND EQUIPMENT".
8. LABEL VALVES ABOVE CEILINGS AND IN CONCEALED SPACES AT CEILING TILE WITH METAL CEILING TACKS INDICATING VALVE # AND TYPE OF WATER. (i.e.; BLUE= COLD WATER, LETTERING CW VLV1-001).
9. FIRE CAULK AND SLEEVE PENETRATIONS THROUGH FIRE RATED ASSEMBLIES. REFER TO LIFE SAFETY PLANS FOR RATED ASSEMBLY LOCATIONS. REFER TO ARCHITECTURAL SHEETS FOR DETAILS AND UL ASSEMBLY NUMBERS.
10. VALVES AND FITTINGS SHALL BE THE SAME SIZE AS THE PIPING WHERE THEY ARE LOCATED UNLESS NOTED OTHERWISE.
11. PROVIDE ALL NECESSARY SUPPORTING DEVICES FOR FIXTURES PER MANUFACTURER INSTALLATION INSTRUCTIONS.
12. SHOP DRAWING SUBMITTALS SHALL BE FULLY COORDINATED PRIOR TO SUBMITTAL.

NOTE: SOME SYMBOLS SHOWN MAY NOT PERTAIN TO THIS PROJECT

SHEET LIST

SHEET NUMBER	SHEET NAME
M-001	MECHANICAL NOTES, LEGENDS, & SYMBOLS
MH101	MECHANICAL FIRST FLOOR PLAN - DATA CENTER NEW WORK
MH102	MECHANICAL ROOF PLAN - DATA CENTER NEW WORK
M-301	MECHANICAL SECTIONS
M-501	MECHANICAL DETAILS
M-502	MECHANICAL DETAILS
M-701	MECHANICAL CONTROLS
M-702	MECHANICAL CONTROLS
M-703	MECHANICAL CONTROLS
M-801	MECHANICAL SCHEDULES

Revisions | Date

CONSULTANT

Above Group
ENGINEERING. DESIGN. CONSULTING.
www.abovegroupinc.com
COA/CA Lic. No. 31120
305 East Dr., Suite H,
Melbourne, Florida 32904
PH: 321.345.9026

ARCHITECT/ENGINEER OF RECORD

RDC◆JPA ARCHITECTURE
524 Fernwood Drive, Altamonte Springs, Florida 32701 | www.rdcjpa.com | 800.362.1523

STAMP

STATE OF TEXAS — CHRISTOPHER BAILEY — 130679 — LICENSED PROFESSIONAL ENGINEER

Chris Bailey

Office of Construction and Facilities Management

VA U.S. Department of Veterans Affairs

Drawing Title	MECHANICAL NOTES, LEGENDS, & SYMBOLS
Phase	BID DOCUMENTS
Project Title	GAINESVILLE DATA CENTER
Project Number	573-21-106
Building Number	
Approved:	STATION CHIEF - EDWIN BURNETT
	FULLY SPRINKLERED
Location	GAINESVILLE, FL
Issue Date	04.20.2026
Checked	GSC
Drawn	CNB
Drawing Number	M-001

Autodesk Docs://Florida, Gainesville VA\122085_VA Gainesville_Data Ctr_R25_MEPT.rvt
4/17/2026 4:06:23 PM

VA FORM 08 - 6231

DRAWING NOTES:

1. THE DATA CENTER ENVIRONMETAL REQUIREMENTS SHALL BE CLASSIFIED AS ENVIRONMENTAL CLASS A1 PER ASHRAE TC9.9 THERMAL GUIDELINES TO SUPPORT MISSION-CRITIAL OPERATIONS.
2. THE DATA CENTER CRAC UNITS SHALL MAINTAIN AN AVERAGE RACK-FACE INLET TEMPERATURE RANGE OF 72°F TO 80.6°F. THE RACK-FACE INLET TEMPERATURE SHALL BE MONITORED BY THE AVERAGE OF A STANDARD THREE-SENSOR TEMPERATURE MEASUREMENTS LOCATED AT THE BOTTOM, MIDDLE, AND TOP HEIGHT LEVELS OF THE RACK-FACE INLET. SENSORS SHALL BE MOUNTED 2" FROM THE RACK-FACE INLET. SERVER CABINET EXHAUST TEMPERATURES SHALL NOT BE USED TO DETERMINE CRAC UNIT COOLING SETPOINTS.

CODED NOTES:

1. SERVER CABINET WITH VERTICAL EXHAUST DUCT UP TO RA DUCT. MOUNT BOTTOM OF RA DUCT 9'-2" MIN AFF. (TYP)
2. RA DUCT UP TO RA PLENUM. CONNECT RA DUCT TO 1" HIGH FLANGE PROVIDED BY CRAC MANUFACTURER. MOUNT BOTTOM OF RA PLENUM 9'-2" MIN AFF.
3. PROVIDE 24" HIGH FLOORSTAND FOR DOWNFLOW CRAC UNIT. REFER TO MECHANICAL SCHEDULES FOR ADDITIONAL INFORMATION.
4. BUILDING CONTROL PANEL. 120V POWER SUPPLY TO BE PROVIDED BY DIVISION 26.
5. ROUTE CONDENSATE PIPING TO CONDENSATE PIT OUTSIDE MECHANICAL ROOM. ROUTE REFRIGERANT PIPING TO CONDENSING UNIT IN MECHANICAL YARD.
6. PROVIDE EQUIPMENT PADS EXTENDING 4" BEYOND EQUIPMENT EDGES AND 6" ABOVE GRADE.
7. DUCT SMOKE DETECTOR TO BE PROVIDED BY MECHANICAL CONTRACTOR AND WIRED BY THE FIRE ALARM CONTRACTOR.
8. PROVIDE REMOTE FUEL FILL PORT SURFACE MOUNT TYPE WITH WEATHER PROOF ENCLOSURE ON THE EXTERIOR WALL. RECOMMENDED INSTALLATION HEIGHT IS 32" - 34" FROM FINISHED EXTERIOR GRADE TO THE CENTER OF THE FILL PIPE.
9. RACK MOUNTED WIRED TEMPERATURE AND HUMIDITY SENSOR. PROVIDE ONE PER CABINET AT THE END OF EACH ROW OF RACKS. COORDINATE WITH TELECOM CONTRACTOR.
10. RUN TERMINAL UNIT CONTINUOUSLY FOR PRESSURIZATION OF DATA CENTER.
11. THE AREA ABOVE SOFFIT CEILING SHALL REMAIN CLEAR OF DUCT, PIPING, AND OTHER OBSTRUCTIONS TO ALLOW LADDER ACCESS TO HATCH ABOVE.

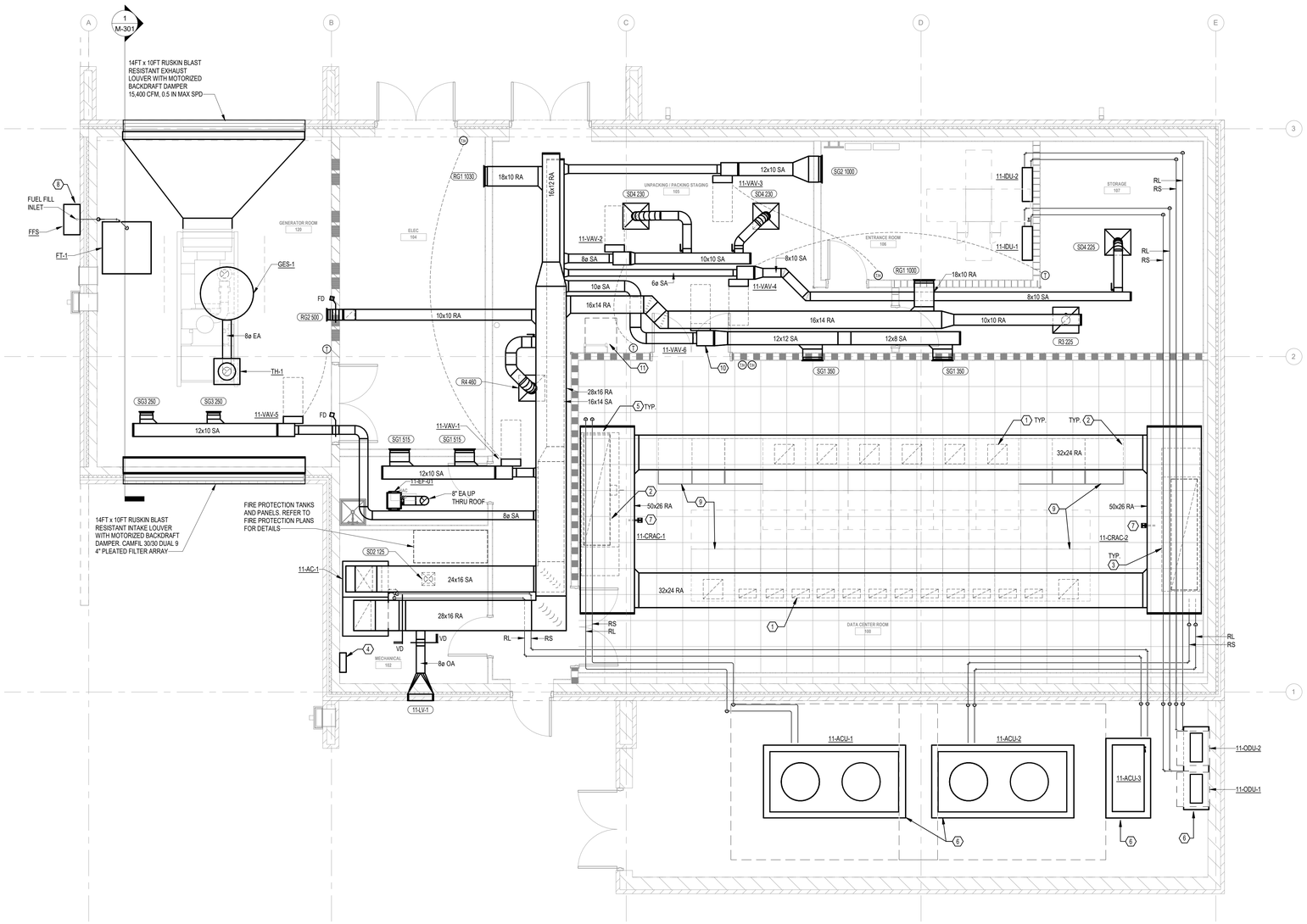

1 DATA CENTER - FIRST FLOOR - MECHANICAL NEW WORK
1/4" = 1'-0"

N 0 2' 4' 8' 12'
1/4" = 1'-0"

CONSULTANT: Above Group, ENGINEERING. DESIGN. CONSULTING. www.abovegroupinc.com COA/CA Lic. No. 31120 305 East Dr., Suite H, Melbourne, Florida 32904 PH: 321.345.9026	ARCHITECT/ENGINEER OF RECORD: RDC◆JPA ARCHITECTURE 524 Fernwood Drive, Altamonte Springs, Florida 32701 | www.rdcjpa.com | 800.362.1523	STAMP: STATE OF TEXAS, CHRISTOPHER BAILEY, 130679, LICENSED, PROFESSIONAL ENGINEER
Office of Construction and Facilities Management; VA U.S. Department of Veterans Affairs		

Drawing Title: MECHANICAL FIRST FLOOR PLAN - DATA CENTER NEW WORK	Phase: BID DOCUMENTS	Project Title: GAINESVILLE DATA CENTER	Project Number: 573-21-106
			Building Number: 43
Approved: STATION CHIEF - EDWIN BURNETT	FULLY SPRINKLERED	Location: GAINESVILLE, FL	Drawing Number: MH101
		Issue Date: 04.20.2026 / Checked: GSC / Drawn: CNB	

Revisions | Date

Autodesk Docs://Florida, Gainesville VA\122085_VA Gainesville_Data Ctr_R25_MEPT.rvt
4/17/2026 4:06:25 PM

VA FORM 08 - 6231

DRAWING NOTES:
1. THE DATA CENTER ENVIRONMETAL REQUIREMENTS SHALL BE CLASSIFIED AS ENVIRONMENTAL CLASS A1 PER ASHRAE TC9.9 THERMAL GUIDELINES TO SUPPORT MISSION-CRITICAL OPERATIONS.
CODED NOTES:
(1) EXHAUST DUCT THROUGH ROOF. TERMINATE WITH GOOSENECK FITTING.

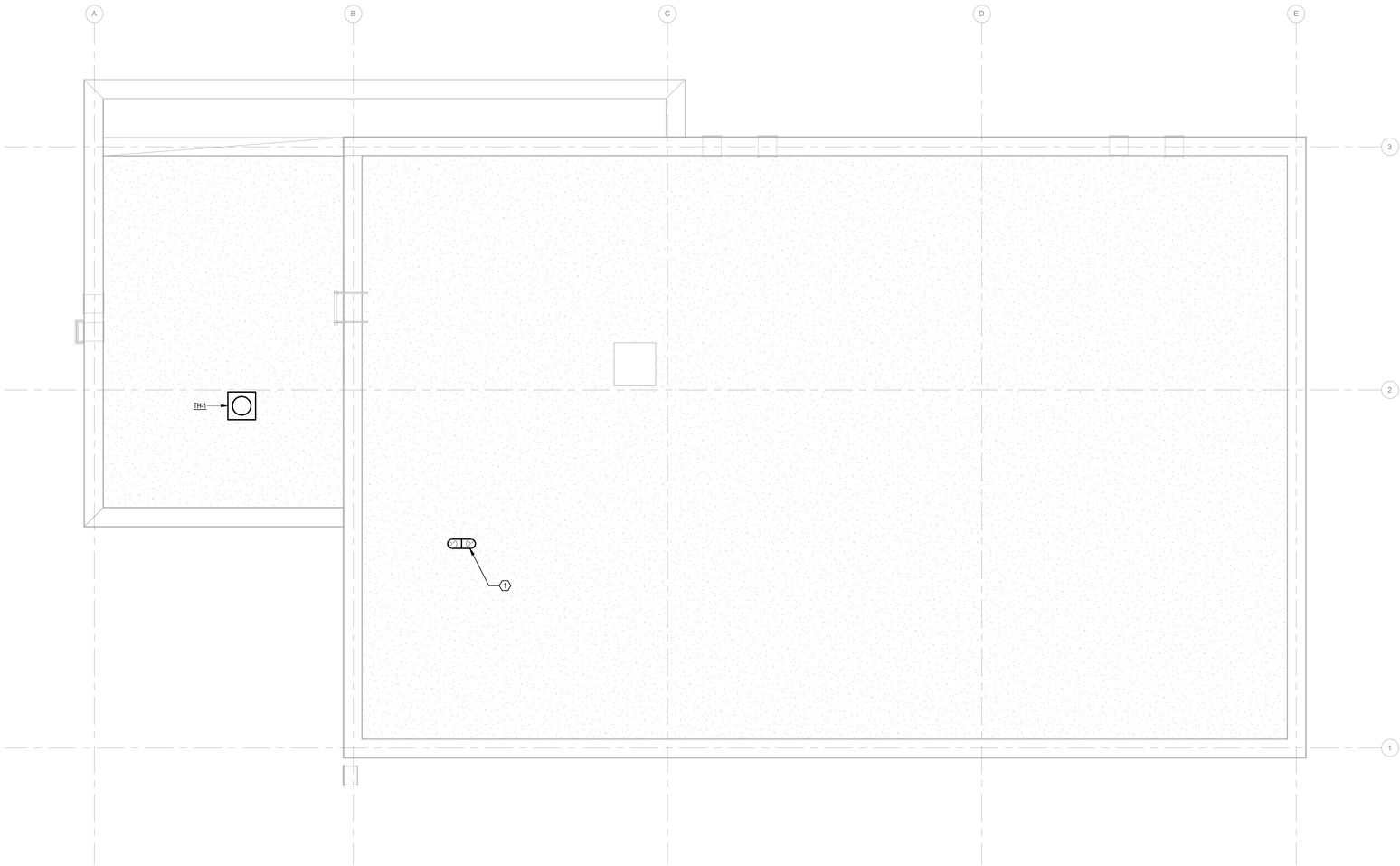

1 DATA CENTER - ROOF PLAN - MECHANICAL NEW WORK
1/4" = 1'-0"

N

0 2' 4' 8' 12'
1/4" = 1'-0"

Autodesk Docs://Florida_Gainesville VA/12085_VA Gainesville_Data Ctr_R25_MEPT.rvt

4/17/2026 4:06:26 PM

Revisions	Date

CONSULTANT

Above Group
ENGINEERING. DESIGN. CONSULTING.
www.abovegroupinc.com
COA/CA Lic. No. 31120
305 East Dr., Suite H,
Melbourne, Florida 32904
PH: 321.345.9026

ARCHITECT/ENGINEER OF RECORD

RDC◆JPA
ARCHITECTURE
524 Fernwood Drive, Altamonte Springs, Florida 32701 | www.rdcjpa.com | 800.362.1523

STAMP

STATE OF TEXAS
CHRISTOPHER BAILEY
130679
LICENSED
PROFESSIONAL ENGINEER
Chris Bailey

Office of Construction and Facilities Management

VA U.S. Department of Veterans Affairs

Drawing Title: MECHANICAL ROOF PLAN - DATA CENTER NEW WORK	Phase: BID DOCUMENTS	Project Title: GAINESVILLE DATA CENTER	Project Number: 573-21-106
Approved: STATION CHIEF - EDWIN BURNETT	FULLY SPRINKLERED	Location: GAINESVILLE, FL	Building Number: 43
		Issue Date: 04.20.2026 / Checked: GSC / Drawn: CNB	Drawing Number: MH102

VA FORM 08 - 6231

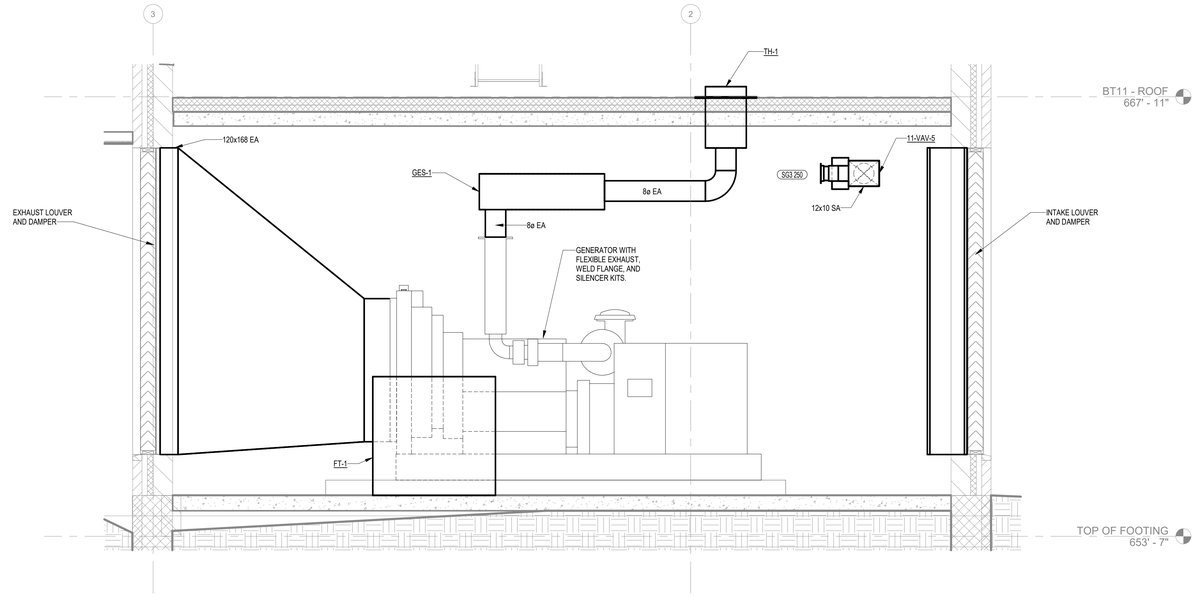

1 SECTION VIEW - GENERATOR ROOM
1/2" = 1'-0"

Autodesk Docs://Florida, Gainesville VA/122085_VA Gainesville_Data Ctr_R25_MEPT.rvt
4/17/2026 4:06:28 PM

Revisions	Date

CONSULTANT

Above Group
ENGINEERING. DESIGN. CONSULTING.
www.abovegroupinc.com
COA/CA Lic. No. 31120
305 East Dr., Suite H,
Melbourne, Florida 32904
PH: 321.345.9026

ARCHITECT/ENGINEER OF RECORD

RDC◆JPA
ARCHITECTURE
524 Fernwood Drive, Altamonte Springs, Florida 32701 | www.rdcjpa.com | 800.362.1523

STAMP

STATE OF TEXAS
CHRISTOPHER BAILEY
130679
LICENSED
PROFESSIONAL ENGINEER
Chris Bailey

Office of Construction and Facilities Management

VA U.S. Department of Veterans Affairs

Drawing Title: MECHANICAL SECTIONS	Phase: BID DOCUMENTS	Project Title: GAINESVILLE DATA CENTER	Project Number: 573-21-106
Approved: STATION CHIEF - EDWIN BURNETT	FULLY SPRINKLERED	Location: GAINESVILLE, FL	Building Number
		Issue Date: 04.20.2026 / Checked: GSC / Drawn: BUP	Drawing Number: M-301

VA FORM 08 - 6231

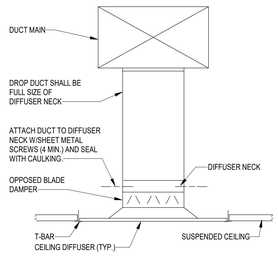

1 DUCT DIFFUSER CONNECTION DETAIL
N.T.S.

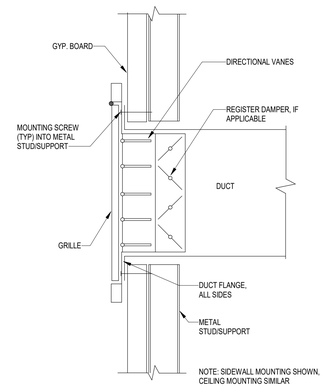

2 GRILLE/REGISTER DUCT CONNECTION DETAIL
N.T.S.

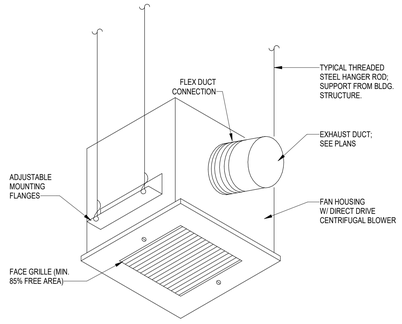

3 CEILING MOUNTED EXHAUST FAN DETAIL
N.T.S.

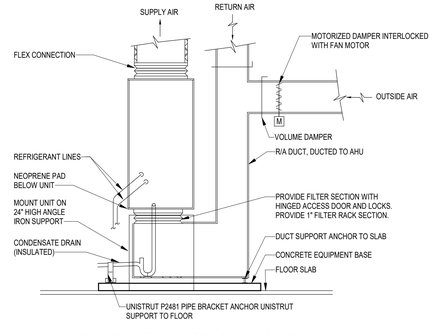

NOTE: AN OVERFLOW DEVICE SHALL BE PROVIDED FOR CONDENSATE CONTROL IN ACCORDANCE TO FBC - MECHANICAL (2020) 307.2.3.

4 AHU INSTALLATION FOR VERTICAL UNITS
N.T.S.

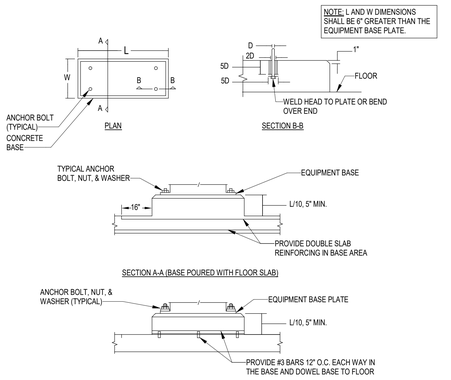

5 CONCRETE EQUIPMENT BASES DETAIL
N.T.S.

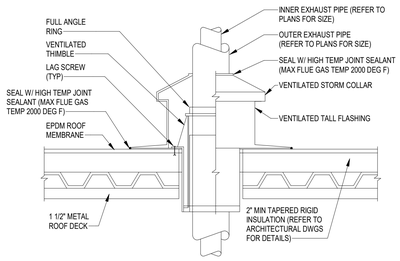

6 GENERATOR STACK ROOF THIMBLE DETAIL
N.T.S.

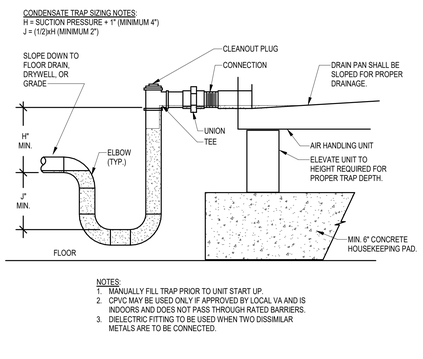

NOTES:
1. MANUALLY FILL TRAP PRIOR TO UNIT START UP.
2. CPVC MAY BE USED ONLY IF APPROVED BY LOCAL VA AND IS INDOORS AND DOES NOT PASS THROUGH RATED BARRIERS.
3. DIELECTRIC FITTING TO BE USED WHEN TWO DISSIMILAR METALS ARE TO BE CONNECTED.

7 AHU CONDENSATE DRAIN TRAP (INTERIOR)
NTS

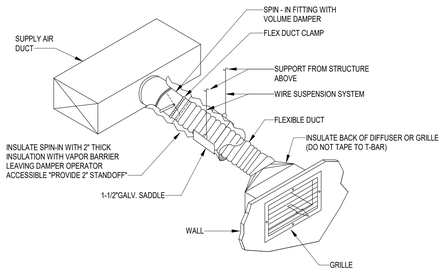

8 DUCT/DIFFUSER SIDEWALL DETAIL
N.T.S.

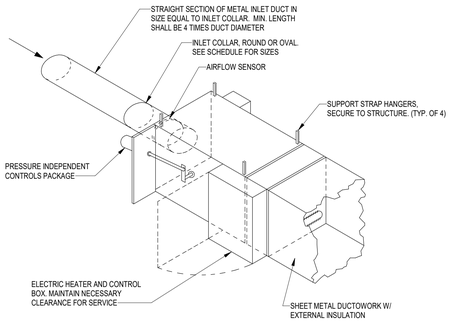

9 VAV TERMINAL W/ ELECTRIC REHEAT DETAIL
N.T.S.

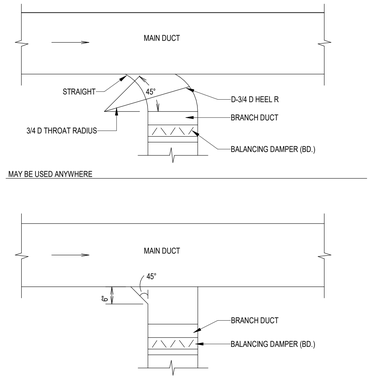

13 DUCT BRANCH CONNECTION DETAIL
N.T.S.

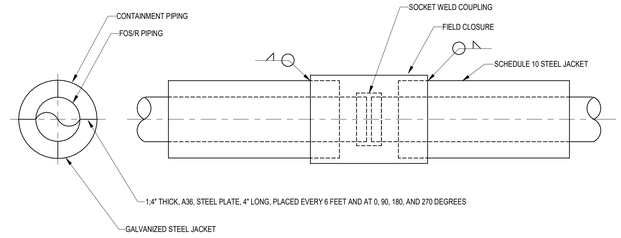

10 FUEL OIL DOUBLE WALL PIPING DETAIL
N.T.S.

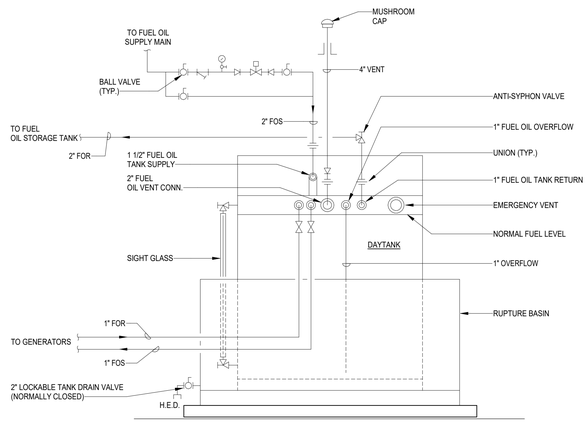

11 DAYTANK INSTALLATION DETAIL
N.T.S.

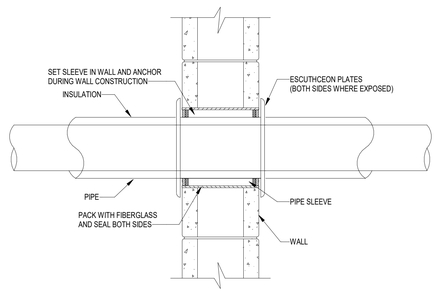

12 PIPING INTERIOR WALL PENETRATION DETAIL
N.T.S.

CONSULTANT

Above Group
ENGINEERING. DESIGN. CONSULTING.
www.abovegroupinc.com
COA/CA Lic. No. 31120
305 East Dr., Suite H,
Melbourne, Florida 32904
PH: 321.345.9026

ARCHITECT/ENGINEER OF RECORD

RDC◆JPA
ARCHITECTURE
524 Fernwood Drive, Altamonte Springs, Florida 32701 | www.rdcjpa.com | 800.362.1523

STAMP

STATE OF TEXAS
CHRISTOPHER BAILEY
130679
LICENSED
PROFESSIONAL ENGINEER
Chris Bailey

Office of Construction and Facilities Management

VA U.S. Department of Veterans Affairs

Revisions	Date

Drawing Title	MECHANICAL DETAILS
Phase	BID DOCUMENTS
Project Title	GAINESVILLE DATA CENTER
Project Number	573-21-106
Building Number	
Approved:	STATION CHIEF - EDWIN BURNETT
	FULLY SPRINKLERED
Location	GAINESVILLE, FL
Issue Date	04.20.2026
Checked	GSC
Drawn	BUP
Drawing Number	M-501

VA FORM 08 - 6231

Autodesk Docs://Florida, Gainesville VA\122085_VA Gainesville_Data Ctr_R25_MEPT.rvt
4/17/2026 4:06:30 PM

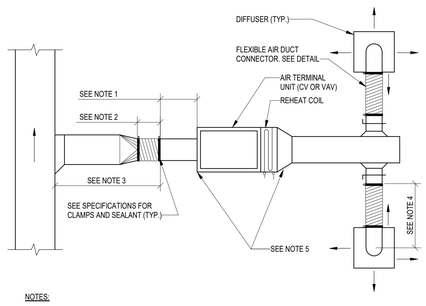

NOTES:

1. RIGID STRAIGHT TERMINAL UNIT INLET LENGTH SHALL BE A MINIMUM OF 3 TIMES THE DIAMETER OF INLET.
2. A FLEXIBLE AIR DUCT CONNECTOR IS NOT MANDATORY FOR INLET TO THIS BOX, BUT ALLOWED TO ACCOMMODATE MINOR OFFSETS. MAXIMUM LENGTH 3'-0" [900mm].
3. A BRANCH DUCT SERVING AN INDIVIDUAL BOX MAY BE THE SAME SIZE AS THE BOX INLET, PROVIDED THE EQUIVALENT LENGTH OF THE BRANCH DUCT, AS SHOWN, DOES NOT EXCEED 10 FEET (3 METERS). FOR LONGER LENGTHS, INCREASE THE DUCT SIZE AND PROVIDE A DUCT TRANSITION TO MAINTAIN THE DUCT STATIC PRESSURE DROP AT OR BELOW 0.2"/100' [1.64Pa/m].
4. FLEXIBLE AIR DUCT CONNECTORS, WHEN USED FROM TERMINAL UNIT SUPPLY AIR DUCT TO DIFFUSER, SHALL NOT EXCEED 5'-0" [1500mm]. USE RIGID ELBOWS FOR CHANGE OF DIRECTION GREATER THAN 45°.
5. COMPONENT ARRANGEMENT MAY VARY BY MANUFACTURER. PROVIDE INSULATION W/VAPOR BARRIER FOR CONNECTING DUCT SECTIONS.
6. USE OF THE FLEXIBLE AIR DUCT CONNECTORS ARE NOT PERMITTED FOR THE DEDICATED AHU SERVING THE SURGICAL SUITE.

1 DUCT CONNECTIONS - AIR TERMINAL UNITS
N.T.S.

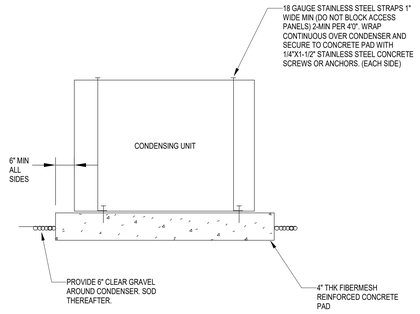

2 CONDENSING UNIT MOUNTED ON GRADE DETAIL
N.T.S.

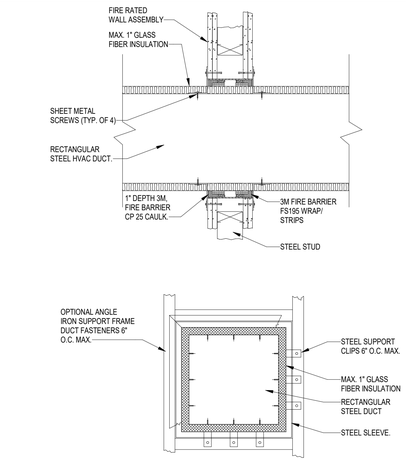

3 DUCT PENETRATION THRU FIRE RATED WALL DETAIL
N.T.S.

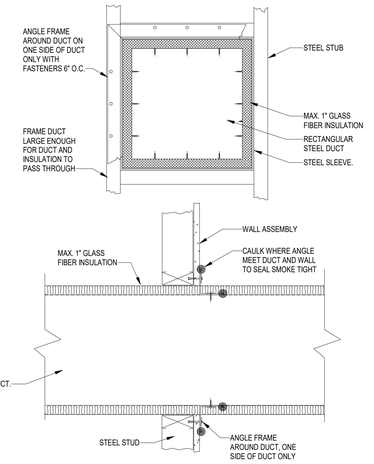

4 DUCT PENETRATION THRU NON-RATED WALL DETAIL
N.T.S.

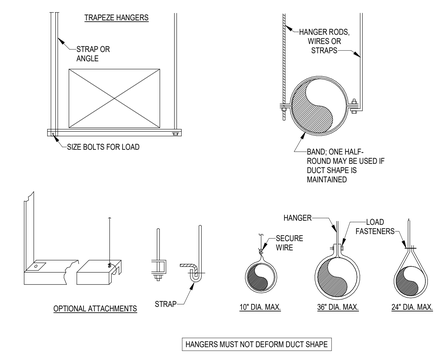

5 DUCT SUPPORTS - RECT. & ROUND DETAIL
N.T.S.

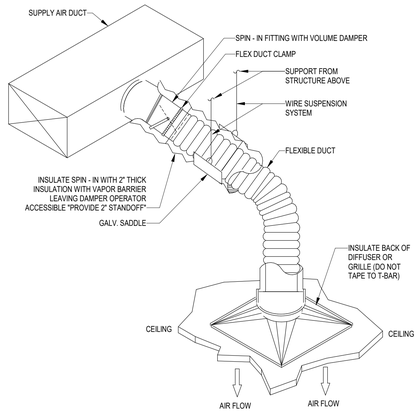

6 DUCT/DIFFUSER CONNECTION DETAIL
N.T.S.

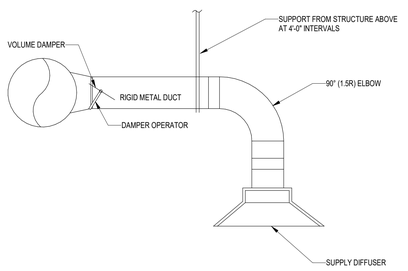

7 DUCT/DIFFUSER LAYOUT W/ DAMPER DETAIL
N.T.S.

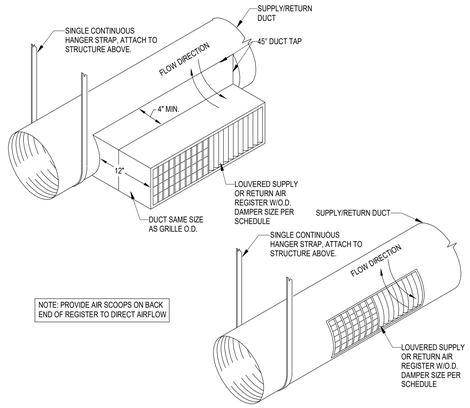

8 EXPOSED DUCT SUPPLY/RETURN REGISTER DETAIL
N.T.S.

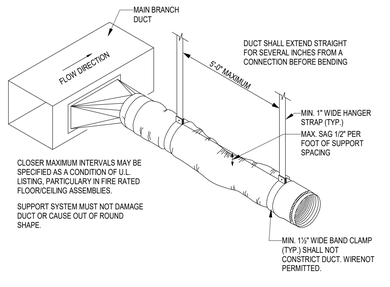

9 FLEXIBLE DUCT SUPPORT DETAIL
N.T.S.

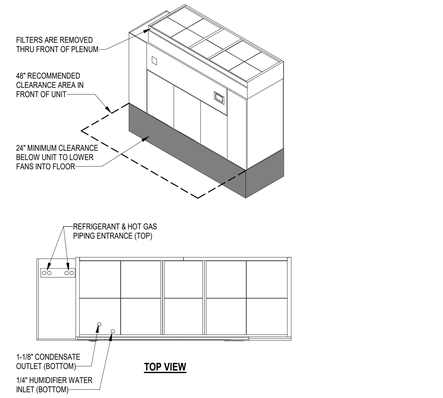

14 DOWNFLOW DX CRAC UNIT DETAIL
N.T.S.

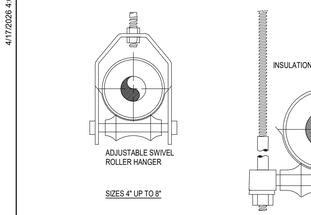

10 INSULATED PIPE HANGER DETAIL
N.T.S.

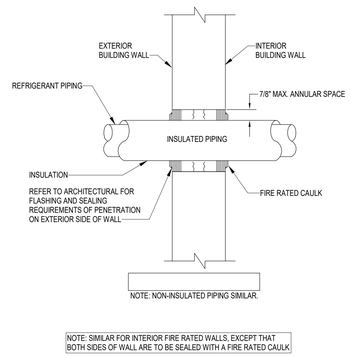

11 PIPING PENERATION THRU EXTERIOR WALL DETAIL
N.T.S.

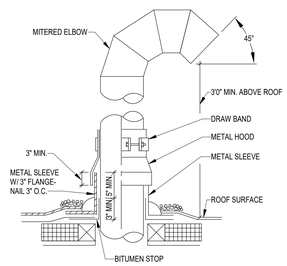

12 ROUND GOOSENECK DETAIL
N.T.S.

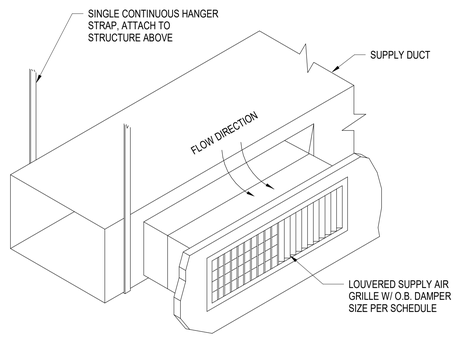

13 SUPPLY TAKEOFF W/ SIDEWALL GRILLE DETAIL DETAIL
N.T.S.

Revisions	Date

CONSULTANT

Above Group
ENGINEERING. DESIGN. CONSULTING.
www.abovegroupinc.com
COA/CA Lic. No. 31120
305 East Dr., Suite H,
Melbourne, Florida 32904
PH: 321.345.9026

ARCHITECT/ENGINEER OF RECORD

RDC◆JPA
ARCHITECTURE
524 Fernwood Drive, Altamonte Springs, Florida 32701 | www.rdcjpa.com | 800.362.1523

STAMP

STATE OF TEXAS
CHRISTOPHER BAILEY
130679
LICENSED
PROFESSIONAL ENGINEER
Chris Bailey

Office of Construction and Facilities Management

VA U.S. Department of Veterans Affairs

Drawing Title	MECHANICAL DETAILS
Phase	BID DOCUMENTS
Approved:	STATION CHIEF - EDWIN BURNETT
Project Title	GAINESVILLE DATA CENTER
Project Number	573-21-106
Building Number	
Location	GAINESVILLE, FL
Drawing Number	M-502
Issue Date	04.20.2026
Checked	GSC
Drawn	BUP

Autodesk Docs://Florida_Gainesville VA/122685_VA Gainesville_Data Ctr_R25_MEPT.rvt
4/17/2026 4:06:32 PM

VA FORM 08 - 6231

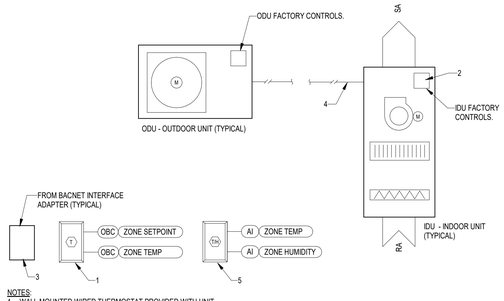

NOTES:
1. WALL MOUNTED WIRED THERMOSTAT PROVIDED WITH UNIT
2. PROVIDE BACNET INTERFACE ADAPTER WITH DUCTLESS SPLIT
3. BAS CONTROLLER INTERFACE TO OPERATOR'S WORK STATION PROVIDED BY TEMP. CONTROL CONTRACTOR
4. DUCTLESS SPLIT POWER AND CONTROL WIRING
5. PROVIDE REDUNDANT TEMPERATURE/HUMIDITY SENSOR FOR HIGH TEMPERATURE/HUMIDITY ALARM TO BAS.

SEQUENCE OF OPERATIONS
SPLIT SYSTEM HEAT PUMP

GENERAL DESCRIPTION

THE SPLIT SYSTEM HEAT PUMP CONSISTS OF AN INDOOR FAN COIL UNIT (IDU) AND OUTDOOR CONDENSING UNIT (ODU) THAT PROVIDES HEATING AND COOLING FOR THE CONDITIONED SPACE AS SHOWN ON THE DRAWINGS. THE INDOOR FAN COIL UNIT PROVIDES INDEPENDENT TEMPERATURE CONTROL FOR THE SPACE SERVED.

COOLING MODE
WHEN THE SPACE TEMPERATURE RISES ABOVE THE COOLING SETPOINT (80.6°F (ADJ)) THE UNIT SHALL OPERATE IN COOLING MODE AS DEFINED BY THE INTEGRATED FACTORY DIGITAL CONTROLS (DDC) SYSTEM.

COMPONENT CONTROLS
OUTDOOR CONDENSING UNIT (CU-X)
THE CONDENSING UNIT SHALL OPERATE SUBJECT TO THE INTEGRATED FACTORY DIGITAL CONTROLS (DDC) SYSTEM.

INDOOR UNIT (IDU-X)
FAN: THE FAN SWITCH SHALL BE SET TO AUTO AND CONTROLLED BY THE INTEGRATED FACTORY DIGITAL CONTROLS (DDC) SYSTEM.

SPACE TEMPERATURE/HUMIDITY MONITORING (T/H)
THE BUILDING AUTOMATION SYSTEM SHALL MONITOR THE SPACES SERVED WITH A SPACE TEMPERATURE SENSOR WITH ADJUSTABLE ALARM SETTINGS FOR HIGH LIMIT AND LOW LIMIT TEMPERATURE SETTINGS. THE ALARM SHALL BE ANNUNCIATED AT THE OPERATOR'S WORKSTATION WITH GRAPHICAL INTERFACE.

MULTIPLE UNIT CONTROL
IN ROOMS WITH MULTIPLE INDOOR UNITS, EACH UNIT SHALL BE SETUP TO HAVE INDIVIDUAL THERMOSTATS AND CONTROLS. THE UNITS SHALL BE SETUP IN A LEAD/LAG CONFIGURATION WITH THE LEAD INDOOR UNIT TO ACTIVE COOLING MODE AT 80.6°F AND THE LAG INDOOR UNIT TO ACTIVAE COOLING MODE AT 83.6°F.

POINTS LIST SCHEDULE - SPLIT SYSTEM (IDU/ODU-#)

POINTS NAME	HARDWARE POINTS				SOFTWARE POINTS						SHOWN ON GRAPHIC	NOTES
	AI	AO	BI	BO	AV	BV	LOOP	SCHED	TREND	ALARM		
IDU												
FAN STATUS			X						X			1, 3, 4
ZONE TEMPERATURE	X								X		X	1, 3, 4
SETPOINTS												
ZONE HEATING SETPOINT					NOTE 2						X	1, 3, 4
ZONE COOLING SETPOINT					NOTE 2				X		X	1, 3, 4
ALARMS	**DESCRIPTION**									**ALARM**	**ALARM DELAY**	
FAN FAILURE	ALARM FROM OBC									X	10 MIN.	1, 3, 4
HIGH ZONE TEMPERATURE	IF THE ZONE TEMPERATURE IS GREATER THAN THE COOLING SETPOINT BY 5°F (ADJ.).									X	10 MIN.	1, 3, 4
LOW ZONE TEMPERATURE	IF THE ZONE TEMPERATURE IS LESS THAN THE HEATING SETPOINT BY 5°F (ADJ.)									X	10 MIN.	1, 3, 4
HIGH HUMIDITY ALARM	IF THE ZONE HUMIDITY IS ABOVE THE HUMIDITY SETPOINT									X	10 MIN.	1, 3, 4
CONDENSATE PUMP FAILURE	ALARM FROM OBC									X	10 MIN.	1, 3, 4

NOTES:
1. IDU AND CONDENSING UNIT FURNISHED AND CONTROLLED WITH FACTORY INSTALLED CONTROLS. COORDINATE CONTROLLER WITH IDU AND CONDENSING UNIT MANUFACTURER.
2. TCC FIELD INSTALLED DEVICE. SEE PLANS FOR LOCATION.
3. BACNET INTERFACE COMMUNICATION LINK PROVIDED WITH EQUIPMENT. COORDINATE REQUIREMENTS WITH SECTION 230923 AND TEMPERATURE CONTROL CONTRACTOR.
4. CONTROLS CONTRACTOR TO CONNECT MONITORING THROUGH BACNET COMMUNICATION LINK TO BUILDING AUTOMATION SYSTEM.

1 SPLIT SYSTEM HEAT PUMP TYPICAL CONTROL DIAGRAM
N.T.S.

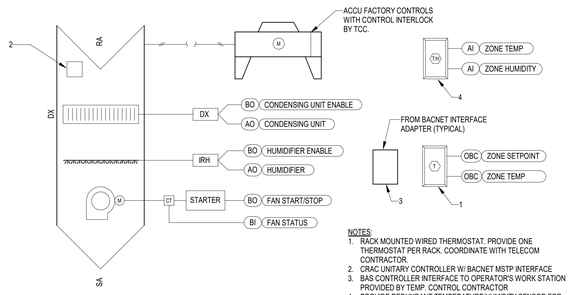

NOTES:
1. RACK MOUNTED WIRED THERMOSTAT. PROVIDE ONE THERMOSTAT PER RACK. COORDINATE WITH TELECOM CONTRACTOR.
2. CRAC UNITARY CONTROLLER W/ BACNET MSTP INTERFACE
3. BAS CONTROLLER INTERFACE TO OPERATOR'S WORK STATION PROVIDED BY TEMP. CONTROL CONTRACTOR
4. PROVIDE REDUNDANT TEMPERATURE/HUMIDITY SENSOR FOR HIGH TEMPERATURE/HUMIDITY ALARM TO BAS.
5. CRAC CONTROL WIRING

SEQUENCE OF OPERATIONS
COMPUTER ROOM AIR CONDITIONING UNITS (CRAC-X)

GENERAL DESCRIPTION
THE CRAC UNIT WITH A CHILLED WATER COIL PROVIDES COOLING FOR THE CONDITIONED SPACE SHOWN ON THE DRAWINGS. THE UNIT SHALL OPERATE SUBJECT TO A SPACE TEMPERATURE SENSOR WITH DIGITAL DISPLAY.

COMPONENT CONTROLS
THE CRAC UNIT AND COOLING COIL SHALL OPERATE TO MAINTAIN THE ZONE TEMPERATURE SETPOINT. THE OCCUPANT SHALL HAVE THE ABILITY TO ADJUST THE ZONE TEMPERATURE 3 DEGREES UP AND 2 DEGREES DOWN FROM THE SETPOINT.

FAN

THE FAN SHALL MODULATE TO MAINTAIN THE ZONE TEMPERATURE SETPOINT AS DEFINED BY THE ON BOARD CONTROLLER.

COOLING COIL

WHEN THE SPACE TEMPERATURE RISES ABOVE THE COOLING SETPOINT (80.6°F (ADJ)) THE UNIT SHALL MODULATE THE CHILLED WATER CONTROL VALVE AS DEFINED BY THE ON BOARD CONTROLLER.

MULTIPLE UNIT CONTROL
IN ROOMS WITH MULTIPLE INDOOR UNITS, EACH UNIT SHALL BE SETUP TO HAVE INDIVIDUAL THERMOSTATS AND CONTROLS. THE UNITS SHALL BE SETUP TO OPERATE EACH AT 50% (ADJ.) TO SATISFY THE DATA CENTER LOAD. EACH UNIT SHALL RAMP UP OR DOWN AS REQUIRED TO MEET THE SPACE TEMPERATURE AND HUMIDITY REQUIREMENTS.

POINTS LIST SCHEDULE - COMPUTER ROOM AC (CRAC-X)

POINTS NAME	HARDWARE POINTS				SOFTWARE POINTS						SHOWN ON GRAPHIC
	AI	AO	BI	BO	AV	BV	LOOP	SCHED	TREND	ALARM	
COMPUTER ROOM UNIT											
ZONE TEMPERATURE	X								X	X	X
ZONE HUMIDITY	X								X	X	X
DISCHARGE AIR TEMPERATURE	X								X	X	
SMOKE DETECTOR			X						X		
UNIT ON-OFF STATUS			X						X	X	
UNIT ENABLE / ON-OFF				X					X		
FAN STATUS			X						X		X
FAN START/STOP				X					X	X	X
HUMIDIFIER		X							X		X
HUMIDIFIER ENABLE				X					X		X
CONDENSING UNIT		X							X		X
CONDENSING UNIT ENABLE				X					X		X
HEATER ENABLE				X					X		X
SETPOINT											
ZONE COOLING SETPOINT					X				X		
ZONE HEATING SETPOINT					X				X		
ZONE HUMIDITY SETPOINT					X				X		
LAT SETPOINT					X				X		
ALARMS	**DESCRIPTION**									**ALARM**	**ALARM DELAY**
HIGH ZONE TEMPERATURE	IF THE ZONE TEMPERATURE IS 5°F GREATER THAN ITS SETPOINT (ADJ.)									X	10 MIN.
LOW ZONE TEMPERATURE	IF THE ZONE TEMPERATURE IS 5°F LESS THAN ITS SETPOINT (ADJ.)									X	10 MIN.
HIGH ZONE HUMIDITY	IF THE ZONE HUMIDITY IS 5% GREATER THAN ITS SETPOINT (ADJ.)									X	5 MIN.
LOW ZONE HUMIDITY	IF THE ZONE HUMIDITY IS 5% LESS THAN ITS SETPOINT (ADJ.)									X	5 MIN.
HIGH SUPPLY AIR TEMPERATURE	IF THE SUPPLY AIR TEMPERATURE IS 5°F GREATER THAN ITS SETPOINT (ADJ.)									X	10 MIN.
LOW SUPPLY AIR TEMPERATURE	IF THE SUPPLY AIR TEMPERATURE IS 5°F LESS THAN ITS SETPOINT (ADJ.)									X	10 MIN.
FAN FAILURE	COMMANDED ON, BUT THE STATUS IS OFF									X	10 MIN.
FAN IN HAND	COMMANDED OFF, BUT THE STATUS IS ON									X	10 MIN.
FAN RUNTIME EXCEEDED	STATUS RUNTIME EXCEEDS A USER DEFINABLE LIMIT (ADJ.)									X	10 MIN.
COMPRESSOR FAILURE	COMMANDED ON, BUT THE STATUS IS OFF									X	10 MIN.
COMPRESSOR IN HAND	COMMANDED OFF, BUT THE STATUS IS ON									X	10 MIN.
COMPRESSOR RUNTIME EXCEEDED	STATUS RUNTIME EXCEEDS A USER DEFINABLE LIMIT (ADJ.)									X	10 MIN.
CONDENSATE PUMP FAILURE	IF THE CONDENSATE FLOAT SWITCH IS ABOVE THE ALARM SETPOINT									X	10 MIN.

NOTES:

2 COMPUTER ROOM AIR CONDITIONER (CRAC-X) TYPICAL CONTROL DIAGRAM
N.T.S.

Revisions | Date

CONSULTANT
Above Group
ENGINEERING. DESIGN. CONSULTING.
www.abovegroupinc.com
COA/CA Lic. No. 31120
305 East Dr., Suite H,
Melbourne, Florida 32904
PH: 321.345.9026

ARCHITECT/ENGINEER OF RECORD
RDC◆JPA ARCHITECTURE
524 Fernwood Drive, Altamonte Springs, Florida 32701 | www.rdcjpa.com | 800.362.1523

STAMP
STATE OF TEXAS
CHRISTOPHER BAILEY
130679
LICENSED
PROFESSIONAL ENGINEER
Chris Bailey

Office of Construction and Facilities Management
U.S. Department of Veterans Affairs

Drawing Title: MECHANICAL CONTROLS
Phase: BID DOCUMENTS
Project Title: GAINESVILLE DATA CENTER
Project Number: 573-21-106
Building Number:
Approved: STATION CHIEF - EDWIN BURNETT
FULLY SPRINKLERED
Location: GAINESVILLE, FL
Issue Date: 04.20.2026
Checked: GSC
Drawn: CNB
Drawing Number: M-701

Autodesk Docs://Florida, Gainesville VA\122085_VA Gainesville_Data Ctr_R25_MEPT.rvt
4/17/2026 4:08:34 PM
VA FORM 08 - 6231

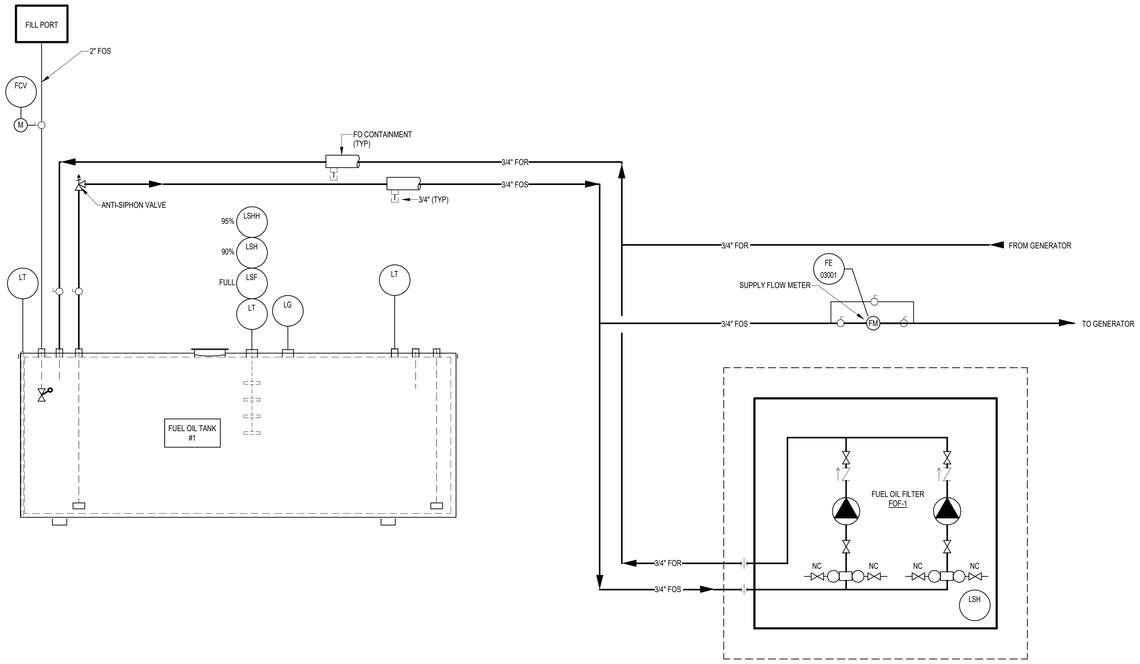

1 FUEL OIL TANK P&ID - NEW WORK
N.T.S.

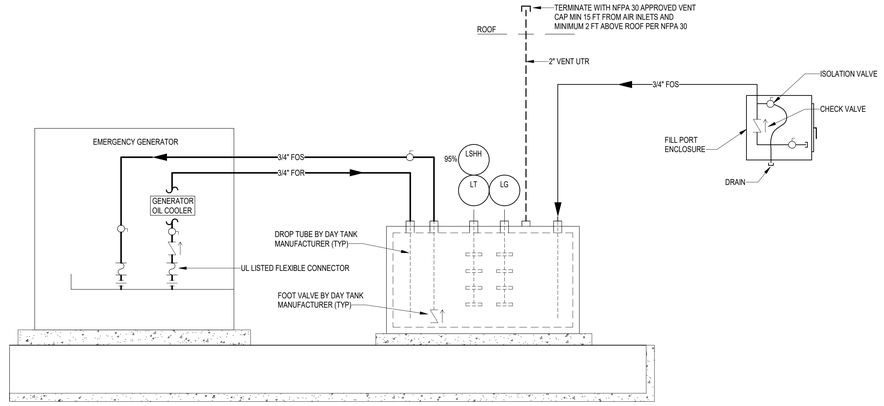

2 DAY TANK P&ID - NEW WORK
N.T.S.

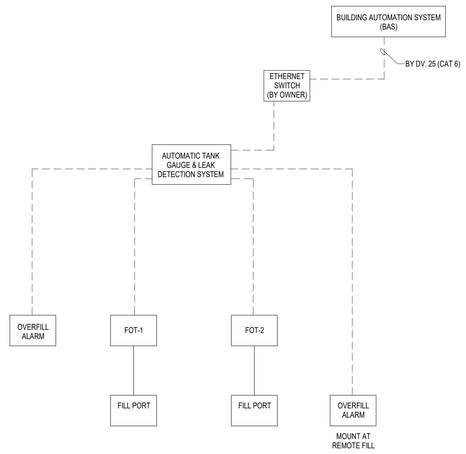

3 FUEL OIL LEAK AND LEVEL MONITORING SYSTEM ARCHITECTURE
N.T.S.

Autodesk Docs://Florida, Gainesville VA\122085_VA Gainesville_Data Ctr_R25_MEPT.rvt
4/17/2026 4:06:35 PM

Revisions	Date

CONSULTANT

Above Group
ENGINEERING. DESIGN. CONSULTING.
www.abovegroupinc.com
COA/CA Lic. No. 31120
305 East Dr., Suite H,
Melbourne, Florida 32904
PH: 321.345.9026

ARCHITECT/ENGINEER OF RECORD

RDC◆JPA ARCHITECTURE
524 Fernwood Drive, Altamonte Springs, Florida 32701 | www.rdcjpa.com | 800.362.1523

STAMP

STATE OF TEXAS
CHRISTOPHER BAILEY
130679
LICENSED
PROFESSIONAL ENGINEER
Chris Bailey

Office of Construction and Facilities Management

VA U.S. Department of Veterans Affairs

Drawing Title: MECHANICAL CONTROLS	Phase: BID DOCUMENTS
Approved: STATION CHIEF - EDWIN BURNETT	FULLY SPRINKLERED
Project Title: GAINESVILLE DATA CENTER	Project Number: 573-21-106
	Building Number:
Location: GAINESVILLE, FL	Drawing Number: M-702
Issue Date: 04.20.2026	Checked: GSC
	Drawn: CNB

VA FORM 08 - 6231

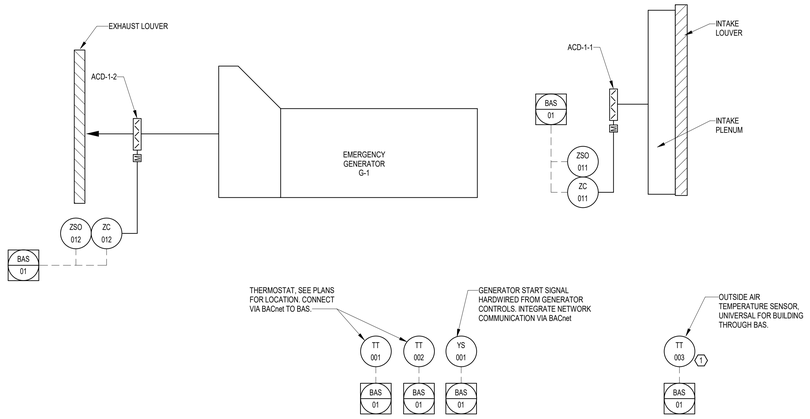

GENERAL:

1. THE ENGINE GENERATOR VENTILATION SYSTEM IS COMPRISED OF AN INTAKE LOUVER, INTAKE PLENUM, INTAKE DAMPERS, THE ENGINE-DRIVEN RADIATOR FAN, EXHAUST PRIMARY DAMPER, EXHAUST PLENUM, AND EXHAUST LOUVER. THERE IS ONE ENGINE GENERATOR.
2. THE ENGINE GENERATOR VENTILATION SYSTEM HAS TWO OPERATING MODES: NORMAL AND EMERGENCY. NORMAL MODE IS DESIGNED TO PROVIDE FOR HEATING AND VENTILATION WHEN THE ENGINES ARE NOT OPERATIONAL. EMERGENCY MODE IS DESIGNED TO PROVIDE FOR VENTILATION OF THE ENGINES WHEN THEY ARE OPERATIONAL DURING AND EVENT, TESTING, EXERCISE, OR ANY TIME THE ENGINE-DRIVEN RADIATOR FAN IS MOVING AIR IN THE SPACE.
3. ALL SYSTEM OPERATIONS AND SEQUENCES SHALL BE MANAGED BY THE BUILDING AUTOMATION SYSTEM (BAS) BASED ON SPACE TEMPERATURE AND/OR ENGINE GENERATOR OPERATIONAL STATUS.
4. THERE IS A TERMINAL UNIT WITH ELECTRIC REHEAT IN THE SPACE SERVED BY THE ENGINE GENERATOR VENTILATION SYSTEM. THIS TERMINAL UNIT WILL OPERATE THROUGH LOCAL A THERMOSTAT TO MAINTAIN SPACE SETPOINT TEMPERATURES.
5. INTAKE DAMPER ACD-1-1 IS DESIGNED TO EACH HANDLE THE AIR FLOW FOR THE ENGINE. IT IS COMPRISED OF DAMPER FRAMES AND DAMPER ACTUATORS. REFERENCE TO THE OPERATION OF EACH ACD SHALL INCLUDE ANY DAMPERS AND ACTUATORS ASSOCIATED WITH THAT ASSEMBLY.

NORMAL MODE:
1. NORMAL MODE SHALL BE COMPRISED OF THE TERMINAL UNIT AND RETURN DUCT. REFER TO THE TERMINAL UNIT CONTROL DIAGRAM.

EMERGENCY MODE:
1. EMERGENCY MODE SHALL BE COMPRISED OF THE INTAKE LOUVER, INTAKE DAMPER ACD-1-1, EXHAUST AIR DAMPERS ACD-1-2, AND THE EXHAUST AIR LOUVERS.
2. UNOCCUPIED/OCCUPIED CONDITIONS SHALL NOT CHANGE THE OPERATION OR AFFECT VENTILATION OF THE ENGINES.
3. THE BAS SHALL MONITOR OUTPUT FROM THE GENERATOR CONTROL SYSTEM. COORDINATE WITH DIVISION 26 FOR ACCESS TO THE CONTROLLERS AND CONNECTION OF A HARDWIRED POINT WHICH PROVIDES ON/OFF STATUS OF THE ENGINES. UPON RECEIPT OF AN "ON" STATUS, THE BAS SHALL ACTIVATE THE ASSOCIATED DAMPERS PER THE "EMERGENCY GENERATOR OPERATIONAL SEQUENCE MATRIX" TABLE FOR ASSOCIATED EQUIPMENT POSITIONS.
4. ALL INTAKE AND EXHAUST DAMPERS SHALL FAIL "OPEN". RECIRCULATION DAMPERS SHALL FAIL "CLOSED".

SYSTEM ALARMS:
1. FAILURE OF A DAMPER ACTUATOR SHALL RESULT IN A "FAILURE" ALARM. FAILURE CONDITION OF THE DAMPER SHALL NOT RESULT IN SHUTDOWN OF AN ENGINE OR AFFECT THE "EMERGENCY MODE" SEQUENCES.
2. EMERGENCY/NORMAL MODE - THE BAS SHALL INDICATE GENERATOR PLANT CONDITION.
3. ALL ALARMS SHALL BE REGISTERED AND DISPLAYED AT THE SYSTEMS EXISTING OPERATOR TERMINAL AND ON THE GENERATOR PLANT GRAPHIC.

INPUT/OUTPUT SUMMARY

SYSTEM	INDICATION											ALARM				CONTROL					REMARKS
G-1 VENTILATION	GRAPHIC	STATUS	TEMPERATURE	RELATIVE HUMIDITY	OCCUNOCC	CFM	STATIC PRESSURE	DIFF. PRESSURE	GPM	POSITION	RUN TIME	HERTZ	LOW	HIGH	CRITICAL	MAINTENANCE	PROGRAM START/STOP	HAND-OFF-AUTO	MODULATE	MIN/MAX	OPEN/CLOSED	
SYSTEM	●	●															●					
PDS-001	●	●						●			●	●		●		●						
PDS-002	●	●						●			●			●		●						
G-1 (YS-001)	●	●									●				●							FROM GEN. CONTROLLER
ACD-1-1	●	●								●					●						●	
ACD-1-2	●	●								●					●						●	
ACD-1-2A	●	●								●					●						●	
ACD-1-2B	●	●								●					●						●	
TT-001	●	●	●										●	●								
TT-002	●	●	●										●	●								
TT-003 (OAT)	●	●	●													●						

1 EMERGENCY GENERATOR CONTROLS
N.T.S.

Autodesk Docs://Florida, Gainesville VA\12085_VA Gainesville_Data Ctr_R25_MEPT.rvt
4/17/2026 4:06:37 PM

Revisions	Date

CONSULTANT

Above Group
ENGINEERING. DESIGN. CONSULTING.
www.abovegroupinc.com
COA/CA Lic. No. 31120
305 East Dr., Suite H,
Melbourne, Florida 32904
PH: 321.345.9026

ARCHITECT/ENGINEER OF RECORD

RDC◆JPA
ARCHITECTURE
524 Fernwood Drive, Altamonte Springs, Florida 32701 | www.rdcjpa.com | 800.362.1523

STAMP

STATE OF TEXAS
CHRISTOPHER BAILEY
130679
LICENSED
PROFESSIONAL ENGINEER
Chris Bailey

Office of Construction and Facilities Management

VA U.S. Department of Veterans Affairs

Drawing Title: MECHANICAL CONTROLS	Phase: BID DOCUMENTS	Project Title: GAINESVILLE DATA CENTER	Project Number: 573-21-106
Approved: STATION CHIEF - EDWIN BURNETT	FULLY SPRINKLERED	Location: GAINESVILLE, FL	Building Number:
		Issue Date: 04.20.2026 / Checked: GSC / Drawn: CNB	Drawing Number: M-703

VA FORM 08 - 6231

GENERATOR SILENCER SCHEDULE

UNIT NO.	SYSTEM	FLOW RATE (CFM)	INLET PIPE SIZE (IN.)	OUTLET (IN.)	DIAMETER (IN.)	HEIGHT (IN.)	ATTENUATION (dB)										BASIS OF DESIGN	COMMENTS
							31.5	63	125	250	500	1K	2K	4K	8K	COMBINED - STS		
GES-1	GENERATOR	2,649	6	6	45	14	-	21.1	28.5	31.7	33.8	34.8	31.7	30.6	29.5	31.1	BERGARI SOLUTIONS 500-016313	1,2,3

NOTES:

1. CRITICAL GRADE SILENCER
2. DISK SILENCER,CONTINUOUSLY WELDED HEAVY DUTY STEEL CONSTRUCTION. HIGH TEMPERATURE BLACK FINISH RATED TO 1,000°F
3. ANSI 125# FLANGES

LOUVER SCHEDULE

UNIT NO.	LOCATION	ASSOCIATED FAN/UNIT	DESIGN AIRFLOW (CFM)	AIR VELOCITY (FPM)	PRESSURE DROP ("WC)	LOUVER SIZE			BASIS OF DESIGN	COMMENTS
						WIDTH (IN)	HEIGHT (IN)	MINIMUM FREE AREA (SFT)		
OUTSIDE AIR										
11-LV-1	102 MECHANICAL	11-AC-1	200	100	0.1	24	24	2	RUSKIN / ELF6375DXD	

NOTES:

1. PROVIDE WITH ALUMINUM BIRDSCREEN
2. PROVIDE WITH 2-COAT CLEAR ANODIZED KYNAR FINISH. COLOR AS SELECTED BY ARCHITECT.
3. PROVIDE LOW VOLTAGE MOTORIZED DAMPER INTERLOCKED WITH ASSOCIATED FAN OR UNIT.
4. FRAME TYPE SHALL MATCH WALL CONSTRUCTION, COORDINATE WITH ARCHITECT.

AIR DISTRIBUTION SCHEDULE

MARK	MANUFACTURER	MODEL NO.	MIN. CFM	MAX. CFM	NECK SIZE	FACE SIZE	MAX. NC	NOTES
SUPPLY AIR								
SD2	TITUS	TDC	100	250	8ø	12x12	35	
SD4	TITUS	TDC	100	250	8ø	24x24	35	
SG1	TITUS	300RL	500	650	18x6	20x8	35	
SG2	TITUS	300RL	450	1200	22x10	24x12	35	
SG3	TITUS	300RL	150	500	12x6	14x8	35	
RETURN AIR								
R3	TITUS	50F	100	250	6ø	24x24	35	
R4	TITUS	50F	200	500	8ø	24x24	35	
RG1	TITUS	350RL	500	500	18x10	20x12	35	
RG2	TITUS	350RL	250	750	10x10	12x12	35	

NOTES:

1. AIR DISTRIBUTION DEVICES LOCATED IN SMALL ROOMS WHERE FULL 24"x24" GRID ARE NOT AVAILABLE SHALL BE PROVIDED WITH SURFACE MOUNTING BORDERS IN LIEU OF LAY-IN. SECURE EACH DEVICE TO CEILING GRID WITH FIELD-FABRICATED SUPPORTS.
2. FINAL COLOR SELECTION SUBJECT TO ARCHITECT APPROVAL
3. PROVIDE STEEL OPPOSED BLADE VOLUME DAMPER
4. PROVIDE VOLUME CONTROL DAMPERS FOR ALL RETURN GRILLES OR REGISTERS FOR BALANCED AIRFLOW. NOT REQUIRED IN TRANSFER.
5. PROVIDE ROUND NECK OR SQUARE-TO-ROUND ADAPTER
6. FRONT BLADES PARALLEL TO SHORT DIMENSION
7. FLEX DUCT SIZE TO BE SAME AS DIFFUSER NECK SIZE.

FUEL TANK SCHEDULE

UNIT NO.	TANK VOLUME (GAL)	SIZE (L" X W" x H")	CONNECTION SIZE	WEIGHT (LBS)	BASIS OF DESIGN
FT-1	300 GAL	45 x 48 x 51.5	1" NPT	800	TRAMONT TRX-300

NOTES:

1. TANK SHALL BE UL-142-RATED, DOUBLE-WALL TANK WITH 150% SECONDARY CONTAINMENT.
2. TANK SHALL BE A RECTANGULAR TYPE WITH DIMENSIONS THAT FIT INSIDE THE ALLOTTED SPACE INSIDE THE GENERATOR ROOM.
3. INCLUDE CONNECTIONS FOR REQUIRED VENTING.

FUEL FILL STATION SCHEDULE

UNIT NO.	SERVICE	TYPE	PIPE SIZE (IN.)	BASIS OF DESIGN	NOTES
FFS	DIESEL	SURFACE MOUNT	2"	ISP FUEL SYSTEMS / NKP	ALL LISTED

NOTES:

1. PROVIDE WITH QUICK CONNECTOR AND DUCT CAP, HAND PUMP WITH CHECK VALVE AND SHUTOFF, TOP INLET.
2. COORDINATE FINISH COLOR WITH ARCHITECT.

SPLIT AIR HANDLING UNIT SCHEDULE (DX)

UNIT NO.	AREA SERVED	LOCATION	OUTSIDE AIRFLOW (CFM)	SUPPLY FAN					DX COOLING SYSTEM								FILTER		ELECTRICAL DATA								BASIS OF DESIGN	COMMENTS
				DESIGN AIRFLOW (CFM)	QTY.	BHP	HP	MAX RPM	MAX. ESP	EAT DB (°F)	EAT WB (°F)	LAT DB (°F)	LAT WB (°F)	MAX FACE VEL. (FPM)	MAX APD (In. H2O)	SENS. CAP. (MBH)	TOTAL CAP. (MBH)	MAX VEL. (FPM)	PRE FILTER 1	PRE FILTER 2								
																					MERV	MERV	FLA	MCA	MOCP	V	PH	HZ	UNIT WEIGHT		
11-AC-1	DATA CENTER	MECH 102	200	1593	1	0.89		1588	1.5	78.1	63.2	54.4	53.1	-	-	66.1	74.1	-	7	13	1	2	15	460	3	60	625	AAON V3	ALL

NOTES:

1. SIZE REFRIGERANT LINES PER MANUFACTURER RECOMMENDATIONS FOR SPECIFIC REFRIGERANT LINE RUN.
2. PROVIDE VARIABLE SPEED AIR HANDLER WITH HUMIDISTAT CONTROL.

COMPUTER ROOM AIR CONDITIONING (CRAC) UNIT SCHEDULE

UNIT NO.	AREA SERVED	LOCATION	SUPPLY FAN						DX COOLING								ELEC REHEAT		HUMIDIFIER		ELECTRICAL DATA								BASIS OF DESIGN	COMMENTS
			QTY.	HP	MAX RPM	SUPPLY CFM	TYPE	MAX. ESP	EAT DB (°F)	EAT WB (°F)	LAT DB (°F)	LAT WB (°F)	MAX FACE VEL. (FPM)	TOTAL CAP. (KW)	SENS. CAP. (KW)	TOTAL CAP. (KW)	EAT DB (°F)	LAT DB (°F)	TYPE	CAP. (LB/HR)	FLA	MCA	MOCP	V	PH	HZ	UNIT WEIGHT		
11-CRAC-1	DATA CENTER	DATA CENTER	3	3.75	1210	13,500	EC	0.2	72	60	51	49.9	240	109	89	10	51	-	IR	22	80	92.2	100	460	3	60	3,465	LIEBERT / DA125	ALL
11-CRAC-2	DATA CENTER	DATA CENTER	3	3.75	1210	13,500	EC	0.2	72	60	51	49.9	240	109	89	10	51	-	IR	22	80	92.2	100	460	3	60	3,465	LIEBERT / DA125	ALL

NOTES:

1. PROVIDE SINGLE POINT ELECTRICAL CONNECTION.
2. DISCONNECT PROVIDED BY DIVISION 26. REFER TO ELECTRICAL DRAWINGS.
3. PROVIDE FACTORY CONDENSATE PUMP WITH INTEGRAL FLOAT SWITCH AND RESERVOIR.
4. PROVIDE SECONDARY FLOAT SWITCH IN DRAIN. SWITCH SHALL SEND AN ALARM TO THE LOCAL PANEL AND SHUT UNIT DOWN UPON DETECTION.
5. PROVIDE FACTORY DDC CONTROLLER WITH TOUCH SCREEN FOR EACH UNIT. CONTROLLER SHALL DISPLAY TEMPERATURE, RH, AND UNIT STATUS. CONTROLLER SHALL BE PROVIDED WITH AN OPEN-PROTOCOL, BACNET INTERFACE BETWEEN THE LOCAL CONTROLLER AND THE ECC.
6. UNIT CONTROLS SHALL BE PROTECTED BY UPS.
7. PROVIDE FACTORY 24" HIGH FLOOR STAND WITH VIBRATION ISOLATION.
8. PROVIDE FACTORY RETURN AIR SMOKE DETECTOR WITH DRY CONTACTS FOR REMOTE ALARM.
9. PROVIDE FACTORY VARIABLE SPEED PLUG TYPE ELECTRONICALLY COMMUTATED (EC) SUPPLY FANS.

DUCTLESS SPLIT AIR CONDITIONING SCHEDULE

UNIT NO.	INDOOR UNIT						OUTDOOR UNIT					ELECTRICAL DATA					BASIS OF DESIGN	COMMENTS
	QTY.	CFM	TOTAL COOLING (MBH)	SENSIBLE COOLING (MBH)	EAT		LOCATION	UNIT NO.	QTY.	LOCATION	OA (SUMMER)		MIN. SEER	V	PH	HZ	MCA	MOCP		
					DB	WB					DB	WB								
11-IDU-1	1	-	8,900	-	75.0	63.0	106 ENTRANCE ROOM	11-ODU-1	1	YARD	93.4	76.4	20	208	1	60	12.35	15	DAIKIN FTK09BXVJU (INDOOR) DAIKIN RK09BXVJU	ALL
11-IDU-1	1	-	8,900	-	75.0	63.0	106 ENTRANCE ROOM	11-ODU-1	1	YARD	93.4	76.4	20	208	1	60	12.35	15	DAIKIN FTK09BXVJU (INDOOR) DAIKIN RK09BXVJU	ALL

NOTES:

1. INDOOR UNIT IS ELECRICALLY POWERED FROM THE OUTDOOR UNIT.
2. PROVIDE SINGLE POINT ELECTRICAL CONNECTION.
3. DISCONNECT PROVIDED BY ELECTRICAL. REFER TO ELECTRICAL DRAWINGS.
4. SIZE REFRIGERANT LINES PER MANUFACTURER RECOMMENDATIONS. PROVIDE OVERSIZE LINES AND/OR REFRIGERATION LINE EXTENSION KIT BASED ON MANUFACTURERS RECOMMENDATIONS FOR EXTENDED REFRIGERATION LINE RUNS.
5. PROVIDE 5 YEAR COMPRESSOR WARRANTY.
6. PROVIDE ANTI-RECYCLE COMPRESSOR TIMER.
7. PROVIDE CONDENSER COIL GUARDS.
8. PROVIDE PROTECTIVE COATING ON CASING, BASE, FRAME, AND CONDENSER COIL OF CONDENSING UNIT. ACCEPTABLE PROVIDERS ARE GOLDFIN, BLYGOLD, LUVATA, AND BRONZGLOW. COIL COATING SHALL BE APPLIED AFTER CONSTRUCTION OF THE COIL (COATED FIN STOCK IS NOT ACCEPTABLE). COATING SHALL BE DOCUMENTED TO ENDURE A MINIMUM OF 4,000 HOURS OF SALT SPRAY (ASTM B117). COATING SHALL BE APPLIED BY THE FACTORY TRAINED AND CERTIFIED APPLICATOR.
9. PROVIDE BACNET COMPATIBLE CONTROLS.

SINGLE DUCT AIR TERMINAL UNIT SCHEDULE

UNIT NO.	LOCATION	INLET SIZE	PRIMARY AIR					ELECTRIC HEATING COIL				ELECTRICAL DATA			BASIS OF DESIGN	NOTES
			MIN. CFM	DESIGN CFM	HEATING CFM	NC RATING	MAX. APD (IN WG)	EAT (°F)	LAT (°F)	KW	STEPS	V	PH	HZ		
11-VAV-1	ELECTRICAL ROOM 104	8	460	1030	460	-	-	55	85	1.5	3	208	1	60	TITUS EESV	ALL
11-VAV-2	UNPACKING 105	8	230	460	230	-	-	55	85	1.5	3	208	1	60	TITUS EESV	ALL
11-VAV-3	ENTRANCE ROOM 106	10	500	1000	500	-	-	55	85	1.5	3	208	1	60	TITUS EESV	ALL
11-VAV-4	STORAGE 107	6	100	225	100	-	-	55	85	1.5	3	208	1	60	TITUS EESV	ALL
11-VAV-5	GENERATOR ROOM 120	8	150	500	150	-	-	55	85	1.5	3	208	1	60	TITUS EESV	ALL
11-VAV-6	DATA CENTER 100	10	700	700	300	-	-	-	-	-	-	-	-	-	TITUS EESV	1 - 3

NOTES:

1. NC RATING IS AT 1" WC STATIC.
2. EACH VAV BOX SHALL BE LABELED WITH THE ROOM NUMBER IT SERVES.
3. PROVIDE POWER SOURCE LABEL ON EACH VAV BOX. REFER TO AND COORDINATE WITH ELECTRICAL.
4. PROVIDE ELECTRIC HEATING COILS WITH PROPORTIONAL SCR CONTROLLER TO MODULATE HEATING LOAD.
5. PROVIDE DOOR INTERLOCKING DISCONNECT SWITCH AND MAIN LINE FUSES.

EXHAUST FAN SCHEDULE

MARK	MANUFACTURER	MODEL NO.	SERVES	SYSTEM	TYPE	DESIGN CFM	ESP (IN-WG)	FAN RPM	DRIVE TYPE	MAX SONES	WEIGHT (LBS)	ELECTRICAL				COMMENTS
												HP	FLA	V/PH/HZ	DISC MEANS	
11-EF-01	GREENHECK	SF-A390-VG	HAC	EXHAUST	CENTRIFUGAL WITH GRILLE	100	0.75	1481	DIRECT	8.6	50	06.0	0.9	208/1/60	FACTORY DISCONNECT	ALL

NOTES:

1. PROVIDE DISCONNECT SWITCH.
2. PROVIDE BACKDRAFT DAMPER.
3. EXHAUST FAN SHALL OPERATE CONTINUALLY.

AIR-COOLED CONDENSER SCHEDULE (ACU)

UNIT NO.	QTY	LOCATION	SERVES	REFR. TYPE	TOTAL (MBH)	ELECTRICAL				WEIGHT (LBS.)	BASIS OF DESIGN	COMMENTS
						FLA	MCA	MOCP	VOLTS/PH			
11-ACU-1	1	MECHANICAL YARD	11-CRAC-1	R-410A	336	11.4	11.9	15	460/3	1230	LIEBERT / MCL220E2	1,2,3,4,5
11-ACU-2	1	MECHANICAL YARD	11-CRAC-2	R-410A	336	11.4	11.9	15	460/3	1230	LIEBERT / MCL220E2	1,2,3,4,5
11-ACU-3	1	MECHANICAL YARD	11-AC-1	R-454B	74	11.0	13	20	460/3	425	AAON / CFA-007	1,2,3,4,5,6

NOTES:

1. PROVIDE WITH FACTORY INSTALLED: NEMA 4X HACR CIRCUIT BREAKER/DISCONNECT SWITCH (LOCKABLE) - PHASE MONITOR - LOW AMBIENT CONTROL - BAS CONTROLLER - HAIL GUARD; POWERED CONVENIENCE OUTLET, WIRED BEFORE DISCONNECT SWITCH (GFI, WP, WR, LOCKABLE) - HOT BAS BYPASS - LOW SOUND VARIABLE SPEED CONDENSER FANS.
2. AMBIENT DESIGN TEMPERATURE IS 95° F.
3. PROVIDE SINGLE POINT ELECTRICAL CONNECTION.
4. PROVIDE ANTI-RECYCLE COMPRESSOR TIMER.
5. PROVIDE REFRIGERANT PIPING; SIZE PER MANUFACTURER'S RECOMMENDATIONS; INSTALL USING INSULATED PIPE SUPPORTS. INSULATE PIPING. PROVIDE UV RESISTANT JACKET FOR ANY INSULATION EXPOSED TO OUTDOORS; PAINT TO MATCH UNIT.
6. PROVIDE UNLOADING COMPRESSOR. (MIN. 2 STAGES)

CONSULTANT

Above Group
ENGINEERING. DESIGN. CONSULTING.
www.abovegroupinc.com
COA/CA Lic. No. 31120
305 East Dr., Suite H,
Melbourne, Florida 32904
PH: 321.345.9026

ARCHITECT/ENGINEER OF RECORD

RDC◆JPA ARCHITECTURE
524 Fernwood Drive, Altamonte Springs, Florida 32701 | www.rdcjpa.com | 800.362.1523

STAMP

STATE OF TEXAS · CHRISTOPHER BAILEY · 130679 · LICENSED PROFESSIONAL ENGINEER

Chris Bailey

Office of Construction and Facilities Management

VA U.S. Department of Veterans Affairs

Drawing Title	MECHANICAL SCHEDULES
Phase	BID DOCUMENTS
Project Title	GAINESVILLE DATA CENTER
Project Number	573-21-106
Building Number	
Approved:	STATION CHIEF - EDWIN BURNETT
Location	GAINESVILLE, FL
Issue Date	04.20.2026
Checked	GSC
Drawn	CNB
Drawing Number	M-801

Revisions | Date

Autodesk Docs://Florida, Gainesville VA/122085_VA Gainesville_Data Ctr_R25_MEPT.rvt

4/17/2026 4:06:41 PM

VA FORM 08 - 6231

ELECTRICAL SYMBOLS - POWER/LIGHTING PLANS

SYMBOL	DESCRIPTION
	EXISTING TO BE REMOVED (HEAVY, DASHED LINE)
	EXISTING TO REMAIN (LIGHT, SOLID LINE)
	NEW (HEAVY, SOLID LINE)
ABCD-##	BRANCH CIRCUIT HOMERUN. "ABCD" INDICATES PANEL NAME, "##" INDICATE POLE POSITIONS IN PANEL. ONE SEPARATE GREEN GROUNDING CONDUCTOR SHALL BE PROVIDED FOR EACH HOMERUN
UP	CONDUIT TURNING UP
DN	CONDUIT TURNING DOWN
	CONDUIT STUBBED OUT OR UP
	CONDUIT CONTINUED
	BRANCH CIRCUIT PANELBOARD, OVER 250 VOLTS, SURFACE MOUNTED
	BRANCH CIRCUIT PANELBOARD, OVER 250 VOLTS, FLUSH MOUNTED
	BRANCH CIRCUIT PANELBOARD, UNDER 250 VOLTS, SURFACE MOUNTED
	BRANCH CIRCUIT PANELBOARD, UNDER 250 VOLTS, FLUSH MOUNTED
T	TRANSFORMER, PLAN
	GROUND BUS BAR, COPPER
	DISCONNECT SWITCH, FUSED
	DISCONNECT SWITCH, UNFUSED
	JUNCTION BOX
	WALL MOUNTED JUNCTION BOX
	RECEPTACLE, DUPLEX SUBSCRIPTS (TYPICAL FOR ALL RECEPTACLES): G = GFCI TYPE T = TAMPER RESISTANT CH = MOUNTED AT COUNTER HEIGHT WITH BOTTOM OF DEVICE AT 6" ABOVE COUNTER OR 2" ABOVE BACKSPLASH OR AS NOTED ON PLANS IG = ISOLATED GROUND (ORANGE DEVICE) TV = RECEPTACLE MOUNTED ADJACENT TO TV OUTLET USB = DUPLEX RECEPTACLE WITH (1) USB TYPE 'A' AND (1) USB TYPE 'C' WP = DEVICE PROVIDED WITH WEATHERPROOF IN-USE METAL COVER EWC = DENOTES DEVICE FOR ELECTRIC WATER COOLER - COORDINATE WITH EWC INSTALLER FOR MOUNTING HEIGHT RC = RECEPTACLE CONTROLLED PER IECC (2021); PROVIDE POWER PACK FOR RECEPTACLE CIRCUIT, TO BE CONTROLLED THROUGH LOCAL ROOM OCCUPANCY SENSOR(S); PROVIDE DEVICE WITH BLUE DOT OR UNIVERSAL POWER SYMBOL a = LOWER CASE LETTER INDICATES RELAY POWER PACK FOR RECEPTACLE CONTROL S = SWITCHED RECEPTACLE
	RECEPTACLE, DOUBLE DUPLEX (QUADRAPLEX)
	RECEPTACLE, DUPLEX ON EMERGENCY POWER
	RECEPTACLE, SINGLE
	RECEPTACLE, SPECIAL PURPOSE, SEE CODED NOTES ON FLOOR PLANS FOR NEMA CONFIGURATION AND WIRING REQUIREMENTS
	DUPLEX RECEPTACLE, CEILING MOUNTED
	DOUBLE DUPLEX (QUADRAPLEX) RECEPTACLE WITH COMMON COVERPLATE, CEILING MOUNTED
	PEDESTAL MOUNTED DUPLEX RECEPTACLE
EPO	EMERGENCY POWER OFF (EPO) SWITCH
FACP	ALARM, FIRE, PANEL; LETTERS INDICATE AS FOLLOWS: NAC = BOOSTER PANEL FACP = CONTROL PANEL FAAP = ANNUNCIATOR PANEL

LIGHTNING PROTECTION SYSTEM

	TEE SPLICE
	FOUR-WAY SPLICE
	BONDING PLATE
	AIR TERMINAL; PROVIDE PARAPET TYPE BASE WHERE MOUNTED ON PARAPET; PROVIDE FLAT BASE FOR MECHANICAL EQUIPMENT OR ROOF PERIMETER WITH NO PARAPET; PROVIDE BLUNT TIP WHERE MOUNTED ON INTERIOR OF ROOF, UNLESS OTHERWISE NOTED ON LIGHTNING PROTECTION PLANS
	GROUND TERMINAL
DN	DOWN CONDUCTOR
DN	THRU-ROOF CONDUCTOR

SYMBOL	DESCRIPTION
S #	SWITCH (# SUBSCRIPT AS INDICATED BELOW) - SEE PLANS AND SPECIFICATIONS FOR DETAILS BLANK = SINGLE POLE 3 = THREE-WAY D = DIMMER F = FAN SWITCH LV= LOW VOLTAGE - SEE BELOW FOR DETAILS T = TIMER OPERATED M = MANUAL MOTOR STARTING MP= MOTOR SNAP WITH PILOT LIGHT (THERMAL TYPE) E= SWITCH ON EMERGENCY CIRCUIT (RED DEVICE) 2 = DOUBLE POLE 4 = FOUR-WAY K = KEY OPERATED P = WITH PILOT LIGHT RC= REMOTE CONTROL WP= WEATHER PROOF OS= DUAL TECHNOLOGY OCCUPANCY SENSOR a= SUBSCRIPT DEFINES FIXTURES THAT ARE CONTROLLED BY SWITCH X= EXPLOSION PROOF HOA= HAND/OFF/AUTOMATIC
S LV2Dab	LOW VOLTAGE SWITCH - SEE PLANS, SPECIFICATIONS AND WIRING DIAGRAMS FOR DETAILS SUBSCRIPT(S) INDICATE FIXTURES CONTROLLED 'D' INDICATES 0-10V DIMMING '2' INDICATES NUMBER OF LOW VOLTAGE ZONES 'LV' INDICATES LOW VOLTAGE SWITCH
LPP a	LIGHTING POWER PACK RELAY SUBSCRIPT INDICATES CONTROLLING SWITCH AND FIXTURES CONTROLLED (TYPICAL)
LPD	LIGHTING POWER PACK RELAY WITH 0-10V DIMMING
LPE	EMERGENCY LIGHTING POWER PACK RELAY - UL924 COMPLIANT
LPDE	EMERGENCY LIGHTING POWER PACK RELAY - UL924 COMPLIANT AND 0-10V DIMMING
RPP	RECEPTACLE POWER PACK RELAY
OS	CEILING MOUNTED DUAL TECHNOLOGY OCCUPANCY SENSOR
A	FIXTURE TYPE
2 a	LED FIXTURE, RECESSED, PENDANT OR SURFACE CEILING LOWER CASE LETTER INDICATES CONTROLLING SWITCH CIRCUIT NUMBER
	LED, RECESSED, PENDANT OR SURFACE CEILING LIGHTING FIXTURE SHADING INDICATES FIXTURE CONNECTED TO EMERGENCY CIRCUIT OR PROVIDED WITH INTEGRAL EMERGENCY BATTERY PACK; "E" AFTER FIXTURE TYPE TAG INDICATES INTEGRAL BATTERY PACK UNLESS OTHERWISE NOTED ON LIGHT FIXTURE SCHEDULE (TYPICAL FOR ALL LIGHT FIXTURE SYMBOLS)
	LED, RECESSED, PENDANT OR SURFACE CEILING LUMINAIRE
	LED, WALL MOUNTED LUMINAIRE
	LED STRIP LUMINAIRE
	LIGHTING, ONE HEAD EMERGENCY BATTERY POWER, WALL MOUNTED
	LIGHTING, TWO HEAD EMERGENCY BATTERY POWER, WALL MOUNTED
	LIGHTING, EXTERIOR BUILDING
	EXIT LIGHT, LED, CEILING OR PENDANT MOUNTED; DIRECTIONAL ARROWS AS INDICATED; SHADED QUADRANT INDICATES FACE(S) OF LUMINAIRE
	EXIT LIGHT, LED, WALL MOUNTED

ELECTRICAL ONE-LINE

	TRANSFORMER, ONE-LINE
### ABC	PANELBOARD MAIN CIRCUIT BREAKER TYPE, ONE-LINE ### - INDICATES BREAKER RATING ABC - INDICATES PANEL DESIGNATION
### ABC	PANELBOARD MAIN LUG TYPE, ONE-LINE ### - INDICATES BUS RATING ABC - INDICATES PANEL DESIGNATION
###A	CIRCUIT BREAKER ### - INDICATES BREAKER RATING
###A	BRANCH CIRCUIT BREAKER ### - INDICATES BREAKER RATING
K	KIRK KEY
GND	GROUND BUS BAR
	EARTH GROUND
SPD	SURGE PROTECTIVE DEVICE
	ATS = STANDARD TYPE IBATS = ISOLATION BYPASS TYPE
	NAME AMPACITY A # POLES WITHSTAND RATING kA TRANSITION TYPE

ELECTRICAL ABBREVIATIONS

ABBR.	DESCRIPTION	ABBR.	DESCRIPTION	ABBR.	DESCRIPTION
1PH	SINGLE-PHASE	FA	FIRE ALARM	NEUT OR N	NEUTRAL
3PH	THREE-PHASE	FAAP	FIRE ALARM ANNUNCIATOR PANEL	NFPA	NATIONAL FIRE PROTECTION ASSOCIATION
4W	FOUR-WIRE	FACP	FIRE ALARM CONTROL PANEL	NIC	NOT IN CONTRACT
A/E	ARCHITECT/ENGINEER	FC	FOOTCANDLE	NL	NIGHT LIGHT
AF	AMPERE FRAME OR AMP FUSE	FLA	FULL LOAD AMPS	NO	NORMALLY OPEN
AFF	ABOVE FINISHED FLOOR	FP	FIRE PROTECTION	NS	NO SCALE
AFG	ABOVE FINISHED GRADE	FT	FEET OR FOOT	NTS	NOT TO SCALE
AHJ	AUTHORITY HAVING JURISDICTION	GND	GROUND	OC	ON CENTER
AIC	AMPERE INTERRUPTING CAPACITY	G OR GFCI	GROUND FAULT CIRCUIT INTERRUPTER	OD	OUTSIDE DIAMETER
ALT	ALTERNATE	GTB	GROUND TERMINAL BOX	OL	OVERLOAD
AMP	AMPERE	HD	HEAT DETECTOR	P	POLE
ASC	AMPS SHORT CIRCUIT	HOA	HAND-OFF-AUTOMATIC	PA	PUBLIC ADDRESS
AT	AMPERE TRIP	HP	HORSEPOWER	PCB	POLYCHLORINATED BIPHENYL
ATS	AUTOMATIC TRANSFER SWITCH	HZ	HERTZ	PH	PHASE
AUTO	AUTOMATIC	IESNA	ILLUMINATION ENGINEERING SOCIETY OF NORTH AMERICA	PNL	PANEL
AV	AUDIO VISUAL	IMC	INTERMEDIATE METAL CONDUIT	POD	POWER OPERATED DAMPER
AWG	AMERICAN WIRE GAUGE	IR	INFRARED	PVC	POLYVINYL CHLORIDE (PLASTIC)
BLDG	BUILDING	IWH	INSTANTANEOUS WATER HEATER	PWR	POWER
C	CONDUIT	J-BOX	JUNCTION BOX	RCP	REFLECTED CEILING PLAN
CAT	CATALOG	KCMIL	ONE-THOUSAND CIRCULAR MILS	RGS	RIGID GALVANIZED STEEL
CATV	COMMUNITY ANTENNA TELEVISION	kV	KILOVOLT	RM	ROOM
CCTV	CLOSED CIRCUIT TELEVISION	kVA	KILOVOLT AMPERE	RMS	ROOT MEAN SQUARE
cd	CANDELA	kVAH	KILOVOLT AMPERE PER HOUR	REQD	REQUIRED
CD	CONSTRUCTION DOCUMENTS	kVAR	KILOVOLT AMPERE REACTIVE	SCC	SHORT CIRCUIT CAPACITY
CKT	CIRCUIT	kW	KILOWATT	SD	SMOKE DETECTOR
CLG	CEILING	kWH	KILOWATT HOUR	SF	SQUARE FOOT (FEET)
COAX	COAX CABLE	LED	LIGHT EMITTING DIODE	SI	INTERNATIONAL SYSTEM OF UNITS
COMM	COMMUNICATION	LF	LINEAR FEET (FOOT)	SPEC	SPECIFICATION
CONC	CONCRETE	LM	LUMEN	SPST	SINGLE POLE, SINGLE THROW
CONT	CONTINUE	LP	LIGHT POLE	SW	SWITCH
COORD	COORDINATE	LRA	LOCKED ROTOR AMPS	SWBD	SWITCHBOARD
CRI	COLOR RENDERING INDEX	LTG	LIGHTING	SWGR	SWITCHGEAR
CT	CURRENT TRANSFORMER	LV	LOW VOLTAGE	TEL	TELEPHONE
CU	COPPER	MAX	MAXIMUM	TP	TWISTED PAIR
DB	DECIBEL OR DIRECT BURIAL	MC	METAL-CLAD	TPS	TWISTED PAIR SHIELDED
DC	DIRECT CURRENT	MCA	MINIMUM CIRCUIT AMPS	TTB	TELEPHONE TERMINAL BOARD
DEG C	DEGREES CELSIUS	MCB	MAIN CIRCUIT BREAKER	TV	TELEVISION
DEG F	DEGREES FAHRENHEIT	MCC	MOTOR CONTROL CENTER	TYP	TYPICAL
DEMO	DEMOLITION	MDP	MAIN DISTRIBUTION PANEL	UGND	UNDERGROUND
DISC	DISCONNECT	MECH	MECHANICAL	UL	UNDERWRITERS LABORATORY
DN	DOWN	MH	MANHOLE	UON	UNLESS OTHERWISE NOTED
DPDT	DOUBLE POLE, DOUBLE THROW	MIN	MINIMUM	UPS	UNINTERRUPTIBLE POWER SUPPLY
DPST	DOUBLE POLE, SINGLE THROW	MOCP	MAXIMUM OVERCURRENT PROTECTION	V	VOLT
DS	DISCONNECT SWITCH	MLO	MAIN LUGS ONLY	VA	VOLT AMPERE
DWG	DRAWING	MTD	MOUNTED	VAR	VOLT AMPERE REACTIVE
ELEC	ELECTRIC OR ELECTRICAL	MTG	MOUNTING	VFD	VARIABLE FREQUENCY DRIVE
ELEV	ELEVATOR	MTS	MANUAL TRANSFER SWITCH	VOLT	VOLTAGE
EMT	ELECTRICAL METALLIC TUBING	MV	MEDIUM VOLTAGE	W	WATT
ENCL	ENCLOSURE	MVA	MEGAVOLT-AMPERE	WH	WATER HEATER
EPO	EMERGENCY POWER OFF	MW	MEGAWATT MICROWAVE	WP	WEATHERPROOF
ESMT	EASEMENT	NA	NOT APPLICABLE	XFER	TRANSFER
EWC	ELECTRIC WATER COOLER	NC	NORMALLY CLOSED	XFMR	TRANSFORMER
EWH	ELECTRIC WATER HEATER	NEC	NATIONAL ELECTRICAL CODE		
ETR	EXISTING TO REMAIN	NEMA	NATIONAL ELECTRICAL MANUFACTURERS ASSOCIATION		

SHEET LIST

SHEET NUMBER	SHEET NAME
E-001	ELECTRICAL LEGENDS & SYMBOLS
E-002	ELECTRICAL GENERAL NOTES
E-100	ELECTRICAL SITE PLAN
EL101	ELECTRICAL FLOOR PLANS - DATA CENTER - LIGHTING
EP101	ELECTRICAL FLOOR PLANS - DATA CENTER - POWER
EP102	ELECTRICAL ROOF PLAN - DATA CENTER
E-501	ELECTRICAL DETAILS
E-502	ELECTRICAL DETAILS
E-601	ELECTRICAL DIAGRAMS
E-801	ELECTRICAL SCHEDULES
E-802	ELECTRICAL SCHEDULES

Revisions | Date

CONSULTANT

Above Group
ENGINEERING. DESIGN. CONSULTING.
www.abovegroupinc.com
COA/CA Lic. No. 31120
305 East Dr., Suite H,
Melbourne, Florida 32904
PH: 321.345.9026

ARCHITECT/ENGINEER OF RECORD

RDC◆JPA ARCHITECTURE
524 Fernwood Drive, Altamonte Springs, Florida 32701 | www.rdcjpa.com | 800.362.1523

STAMP

Office of Construction and Facilities Management

VA U.S. Department of Veterans Affairs

Drawing Title: ELECTRICAL LEGENDS & SYMBOLS	Phase: BID DOCUMENTS	Project Title: GAINESVILLE DATA CENTER	Project Number: 573-21-106
Approved: STATION CHIEF - EDWIN BURNETT	FULLY SPRINKLERED	Location: GAINESVILLE, FL	Building Number
		Issue Date: 04.20.2026 / Checked: BMS / Drawn: IMW	Drawing Number: E-001

Autodesk Docs://Florida, Gainesville VA-152085_VA Gainesville_Data Ctr_R25_MEPT.rvt
4/13/2026 1:19:31 PM

VA FORM 08 - 6231

ELECTRICAL DEMOLITION NOTES

D1. THE FACILITY WILL REMAIN OCCUPIED DURING RENOVATIONS.
D2. DEVICES, LIGHT FIXTURES AND EQUIPMENT SHOWN IN DASHED LINE TYPE ARE EXISTING TO BE DEMOLISHED; DEVICES, LIGHT FIXTURES AND EQUIPMENT SHOWN IN LIGHT SOLID LINE TYPE ARE EXISTING TO REMAIN, UNLESS OTHERWISE NOTED.
D3. EXISTING EQUIPMENT, LIGHT FIXTURES, DEVICES SHOWN ARE BASED ON FIELD SURVEYS AND RECORD DRAWINGS PROVIDED BY THE OWNER, AND IS NOT NECESSARILY ALL INCLUSIVE IN EVERY AREA AS FAR AS EXISTING ELECTRICAL EQUIPMENT, LIGHT FIXTURES AND DEVICES. EXISTING CIRCUITING SHOWN IS BASED ON RECORD DRAWINGS AND THE SURVEYED PANEL DIRECTORIES, WHERE THEY WERE AVAILABLE. THE ACTUAL CONDITIONS MAY VARY. ALL EXISTING CONDITIONS MUST BE VERIFIED PRIOR TO BID. THE CONDITIONS SHOWN ARE INTENDED TO SHOW THE LOCATIONS OF EXISTING DEVICES, LIGHT FIXTURES AND EQUIPMENT, WHERE SHOWN ON THE PLAN DRAWINGS, AND IN NO WAY RELIEVES THE CONTRACTOR FROM PROVIDING ANY AND ALL COORDINATION NECESSARY TO COMPLETE THE NEW WORK. FIELD CONDITIONS SHALL GOVERN.
D4. WHERE EXISTING DEVICES ARE INDICATED TO REMAIN OR RELOCATED, LOCATED WITHIN THE SCOPE OF THIS PROJECT AND EXISTING CIRCUITING INFORMATION IS UNAVAILABLE, CONTRACTOR IS TO PROVIDE CIRCUIT TRACING TO IDENTIFY PANEL AND CIRCUIT DEVICES ARE CONNECTED TO AND PROVIDE THAT INFORMATION TO A/E PRIOR TO ROUTING CONDUITS AND WIRING FOR NEW DEVICES AND EQUIPMENT WITHIN THE SCOPE OF THIS PROJECT.
D5. PRIOR TO DEMOLITION, FIELD VERIFY CONDUIT AND WIRING WHICH SERVES AREAS OUTSIDE THE SCOPE OF WORK AND PASSES THROUGH THE AREA OF WORK, MAINTAIN CONTINUITY OF SYSTEMS.
D6. WHERE EXISTING DEVICES ARE TO REMAIN, CONTRACTOR MUST EXTEND EXISTING CIRCUITING WHERE NECESSARY TO MAINTAIN CONTINUITY OF CIRCUIT.
D7. COORDINATE WITH THE OWNER FOR DISPOSITION OF ELECTRICAL ITEMS TO BE DEMOLISHED. OWNER SHALL HAVE THE OPTION TO RETAIN REUSABLE ITEMS SUCH AS COVERPLATES, RECEPTACLES, LIGHT FIXTURES, PANELBOARDS, TRANSFORMERS, ETC, NOT BEING USED IN THE FINISHED WORK. COORDINATE WITH THE OWNER PRIOR TO START OF DEMOLITION. PROPERLY AND LEGALLY DISPOSE OF ALL EQUIPMENT AND MATERIALS BEING REMOVED.
D8. COORDINATE EXACT AREAS, WALLS, CEILINGS, ETC. TO BE DEMOLISHED WITH ARCHITECTURAL, STRUCTURAL, PLUMBING AND MECHANICAL DEMOLITION PLANS.
D9. REMOVE EXISTING DEVICES, LIGHT FIXTURES AND EQUIPMENT ARE INDICATED TO BE DEMOLISHED, REMOVE ASSOCIATED CONDUIT AND WIRING BACK TO SOURCE PANEL OR TO NEAREST JUNCTION BOX TO MAINTAIN CIRCUIT CONTINUITY OF DEVICES TO REMAIN AND EQUIPMENT TO REMAIN. WHERE PANELS ARE TO BE REMAIN, TURN BREAKER TO "OFF" POSITION AND LABEL THE CIRCUIT AS "SPARE" ON THE PANEL DIRECTORY.
D10. ALL AREAS OUTSIDE THE SCOPE OF CONSTRUCTION ARE TO REMAIN ENERGIZED. COORDINATE PHASING WITH CONSTRUCTION MANAGER AND OWNER PRIOR TO DEMOLITION WHICH MAY RESULT IN INTERRUPTION OF POWER.
D11. REFER TO ARCHITECTURAL DEMOLITION DRAWINGS FOR EXTENT OF AREA REQUIRING DEMOLITION AND ADDITIONAL INFORMATION ON ELECTRICAL DEMOLITION WITHIN THAT AREA. DISCONNECT ELECTRICAL SERVICE TO ALL EQUIPMENT BEING REMOVED. DEMOLITION SHALL BE PHASED AS REQUIRED BY DIVISION 1, OR DIRECTED BY THE OWNER.
D12. REMOVE ALL CONDUIT LEFT EXPOSED AT WALLS AND CEILINGS REMODELED OR REMOVED AREA. CAP BOTH ENDS OF REMAINING CONDUIT IN WALL OR FLOOR WHERE CUT. REMOVE ALL ASSOCIATED SUPPORTS. REMOVE WIRING BACK TO SOURCE OF VOLTAGE.
D13. ELECTRICAL DEVICES WITHIN THE AREA OF WORK., AND NOT NOTED ON THE DEMOLITION DRAWINGS, WHETHER DUE TO CONCEALMENT BY STORAGE SHELVING, CASEWORK, FURNITURE OR FOR OTHER REASONS, ARE TO BE REMOVED AS REQUIRED, UNLESS SHOWN AS EXISTING TO REMAIN.
D14. CONTRACTOR SHALL BE RESPONSIBLE FOR PATCHING ALL OPENINGS IN EXISTING CONSTRUCTION AFTER REMOVAL OF EQUIPMENT AND ELECTRICAL DEVICES, UNLESS OTHERWISE NOTED ON ARCHITECTURAL PLANS. REPAIRS ARE TO BE DONE TO LOGICAL EDGES OF SURFACES AFFECTED AND SHALL MATCH IMMEDIATE ADJACENT AREAS IN CONSTRUCTION, MATERIAL, FIRE RATING, FINISH AND COLOR.
D15. PROVIDE BLANK COVERPLATES WHERE DEVICES ARE BEING REMOVED FROM EXISTING WALLS TO REMAIN. MATCH COLOR OF NEW ADJACENT DEVICE COVERPLATES.
D16. FIELD VERIFY ALL EXISTING CONDITIONS AND DIMENSIONS PRIOR TO COMMENCEMENT OF WORK AND OBTAIN CLARIFICATIONS FROM ARCHITECT/ENGINEER IF NECESSARY.
D17. COORDINATE SERVICE INTERRUPTION WITH CONSTRUCTION MANAGER, OWNER, LANDLORD, AND UTILITY COMPANY, WHERE APPLICABLE. AND DO NOT INTERRUPT POWER WITHOUT WRITTEN PERMISSION. PROVIDE A MINIMUM OF ONE WEEK'S WRITTEN NOTIFICATION WHEN POWER IS DESIRED TO BE INTERRUPTED.
D18. EXERCISE EXTREME CAUTION WHEN REMOVING/ RELOCATING WIRING AND EQUIPMENT. IT IS THE CONTRACTOR'S RESPONSIBILITY TO ENSURE THAT OTHER WIRING DEVICES, EQUIPMENT AND LIGHT FIXTURES THAT MAY BE CONNECTED TO THE SAME CIRCUIT REMAIN OPERATIONAL AND ACTIVE.
D19. INFORMATION INDICATED IN THE DEMOLITION PORTION OF THE CONTRACT DRAWINGS IS DIAGRAMMATIC IN NATURE. FIELD VERIFY ELECTRICAL CIRCUIT HOMERUNS TO ALL ELECTRICAL ITEMS SCHEDULED TO BE DEMOLISHED AND PERFORM THE WORK AS INTENDED AND DEPICTED ON THE DRAWINGS.
D20. UPDATE ALL EXISTING ELECTRICAL EQUIPMENT NAMEPLATES AND DIRECTORIES AS NECESSARY TO REFLECT FINAL AS-BUILT CONDITIONS AT THE END OF CONSTRUCTION.
D21. STORE ITEMS INDICATED TO BE RETURNED TO THE OWNER IN A DRY, CLEAN AND PROTECTED AREA. NOTIFY OWNER WHEN ITEMS ARE READY TO BE REMOVED.
D22. COORDINATE ANY ELECTRICAL CHANGES TO THE ELECTRICAL SERVICE WITH THE LOCAL UTILITY COMPANY AND THE OWNER PRIOR TO COMMENCEMENT OF WORK.
D23. SCHEDULE ALL POWER INTERRUPTION WITH OWNER FOR EXACT DATE, TIME AND DURATION. PROVIDE A MINIMUM OF 72 HOURS NOTICE PRIOR TO DISCONTINUING ANY POWER TO ANY PORTION OF THE BUILDING, AND MAKE ARRANGEMENTS TO MAINTAIN POWER TO ALL CRITICAL EQUIPMENT AS NEEDED AND REQUESTED BY THE OWNER PRIOR TO COMMENCEMENT OF WORK.
D24. THE DEMOLITION PLAN IS NOT INCLUSIVE OF ALL ELECTRICAL DEVICES WITHIN THE PROJECT AREA. IT IS INTENDED TO PROVIDE A GENERAL KNOWLEDGE OF THE EXISTING CONDITIONS WITHIN THE PROJECT AREA. ANY DISCREPANCIES OR CONDITIONS NOT SHOWN ON THE PLAN SHALL BE BROUGHT TO THE ATTENTION OF THE A/E. THE CONTRACTOR IS RESPONSIBLE FOR ALL REQUIRED ELECTRICAL DEMOLITION WHETHER INDICATED ON THE PLANS OR NOT.
D25. ALL CONDUITS SERVING OTHER SPACES THAT RUN THROUGH THE PROJECT AREA SHALL REMAIN ACTIVE DURING CONSTRUCTION SO AS NOT TO CAUSE DISRUPTION TO THESE OTHER SPACES. ENSURE THAT ALL CONDUITS, NEW OR EXISTING WITHIN THE PROJECT AREA ARE PROPERLY SUPPORTED IN ACCORDANCE WITH THE NEC. ANY EXISTING CONDUIT IS INSTALLED BELOW THE HEIGHT OF THE NEW CEILING SHALL BE RELOCATED TO ABOVE THE NEW CEILING HEIGHT.
D26. REMOVE ALL ABANDONED WIRING AND CONDUIT THAT IS WITHIN THE PROJECT AREA PRIOR TO THE END OF CONSTRUCTION.
D27. UPDATE PANELBOARD DIRECTORIES WHICH ARE MODIFIED BY THIS PROJECT.
D28. REPAIR DISTURBED AREAS TO MATCH EXISTING CONDITIONS.

ELECTRICAL GENERAL NOTES

1. THE DRAWINGS AND APPLICABLE SPECIFICATIONS SHALL BE CONSIDERED SUPPLEMENTARY, ONE TO THE OTHER AND ARE CONSIDERED THE "CONTRACT DOCUMENTS". ALL WORKMANSHIP, METHODS AND/OR MATERIALS DESCRIBED OR IMPLIED BY ONE AND NOT DESCRIBED OR IMPLIED BY THE OTHER SHALL BE PROVIDED, FURNISHED OR PERFORMED AS IF IT HAD APPEARED IN BOTH SECTIONS. THE TERM "CONTRACT DOCUMENTS" DESCRIBED HEREIN IS NOT LIMITED SOLELY TO THE ELECTRICAL PORTION OF THE DRAWINGS AND SPECIFICATIONS, BUT ENCOMPASSES THE DRAWINGS AND SPECIFICATIONS OF ALL DIVISIONS AS A WHOLE.
2. PROVIDE AN OPERATING AND MAINTENANCE MANUAL TO OWNER PRIOR TO THE FINAL ACCEPTANCE. THE MANUAL SHALL INCLUDE, AS A MINIMUM, (1) SUBMITTAL DATA STATING EQUIPMENT RATING AND SELECTED OPTIONS FOR EACH PIECE OF EQUIPMENT REQUIRING MAINTENANCE. ALSO PROVIDE TWO OPERATIONS AND MAINTENANCE MANUALS FOR EACH PIECE OF EQUIPMENT REQUIRING MAINTENANCE. REQUIRED ROUTINE MAINTENANCE ACTIONS AND METHOD OF OPERATION FOR EQUIPMENT SHALL BE CLEARLY IDENTIFIED, AND THE NAME, PHONE NUMBER AND ADDRESS OF AT LEAST ONE QUALIFIED SERVICE AGENCY.
3. INCLUDE ALL COSTS FOR EXCAVATION, SAW CUTTING, CORE DRILLING, BACKFILLING, SURFACE RESTORATION, REPAIR OF FINISHES, ETC. THAT IS REQUIRED IN ORDER TO MEET THE PROJECT REQUIREMENTS.
4. INCLUDE IN BID ALL COSTS ASSOCIATED WITH TEMPORARY ELECTRICAL SERVICE AS REQUIRED FOR USE BY ALL TRADES DURING CONSTRUCTION. REMOVE TEMPORARY POWER AT THE COMPLETION OF THE PROJECT. OBTAIN AND PAY FOR ALL REQUIRED PERMITS FOR TEMPORARY POWER. ENGINEER OF RECORD SHALL BE PROVIDED WITH ADDITIONAL COMPENSATION FROM THE CONTRACTOR WHERE SIGNED & SEALED DRAWINGS ARE REQUESTED BY THE CONTRACTOR TO THE ENGINEER OF RECORD IF REQUIRED BY THE AHJ FOR THE TEMPORARY POWER.
5. PROVIDE A COMPLETE UL LISTED LIGHTNING PROTECTION SYSTEM WITH A MASTER LABEL FOR THE ENTIRE FACILITY PER THE REQUIREMENTS OF NFPA 780, AND THE DIVISION 26 SPECIFICATIONS. UNLESS NOTED OTHERWISE. LIGHTNING PROTECTION SYSTEM SHALL INCLUDE BURIED COUNTERPOISE, UNLESS NOTED OTHERWISE.
6. INCLUDE IN BID THE TRANSPORT AND DISPOSAL OR RECYCLING OF ALL WASTE MATERIALS GENERATED BY THIS PROJECT IN ACCORDANCE WITH ALL LOCAL, STATE AND FEDERAL RULES, REGULATIONS AND GUIDELINES APPLICABLE. COMPLY FULLY WITH STATUTES REGARDING MERCURY-CONTAINING DEVICES, AND WITH ALL DEP AND EPA APPLICABLE GUIDELINES AT THE TIME OF DISPOSAL. PROVIDE OWNER WITH CERTIFICATION OF ACCEPTED DISPOSAL.
7. ALL POWER CIRCUITS HAVE BEEN DESIGNED IN COMPLIANCE WITH SECTION C405.7.10 OF ASHRAE 90.1 REQUIRING 2% OR LESS VOLTAGE DROP FOR FEEDERS, AND 3% OR LESS VOLTAGE DROP FOR BRANCH CIRCUITS.
8. ALL BRANCH CIRCUITS SHALL BE FURNISHED WITH A DEDICATED NEUTRAL. SHARED NEUTRALS ARE NOT ALLOWED UNLESS SPECIFICALLY NOTED ON THE DRAWINGS.
9. VERIFY AND COORDINATE LOCATIONS OF ANY MISCELLANEOUS EQUIPMENT REQUIRING ELECTRICAL CONNECTIONS (I.E., COPIERS, FAX MACHINES, PRINTERS, KITCHEN APPLIANCES, LAUNDRY APPLIANCES, PROJECTION SCREENS, SHOP TOOLS, MACHINE, ELEVATORS, ETC.) WITH APPROVED SHOP DRAWINGS, OWNER-PROVIDED CUT SHEETS, MANUFACTURER'S INSTRUCTIONS, AND EQUIPMENT NAMEPLATE INFORMATION, PRIOR TO ROUGH IN, AND PROVIDE ALL NECESSARY ELECTRICAL REQUIRED.
10. VERIFY AND COORDINATE LOCATIONS AND EXACT ELECTRICAL REQUIREMENTS FOR ALL MECHANICAL, PLUMBING AND FIRE PROTECTION EQUIPMENT PRIOR TO SUBMITTAL OF SHOP DRAWINGS OF ELECTRICAL EQUIPMENT. PROVIDE ALL NECESSARY RACEWAYS, CONDUCTORS, BOXES, EQUIPMENT, ACCESSORIES, ASSOCIATED DISCONNECT SWITCHES, CIRCUIT BREAKERS, CONTROL TRANSFORMERS, FIRE ALARM SHUTDOWN, ETC. REQUIRED FOR A COMPLETE AND OPERATIONAL SYSTEM. COORDINATE WITH APPROPRIATE TRADE'S APPROVED SHOP DRAWINGS, MANUFACTURER'S INSTRUCTIONS, AND EQUIPMENT NAMEPLATE INFORMATION, PRIOR TO ROUGH IN, AND PROVIDE ALL NECESSARY ELECTRICAL REQUIRED, UNLESS OTHERWISE NOTED.
11. ALL WORK ON THE ELECTRICAL SYSTEM REQUIRED BY THE CONTRACT DOCUMENTS SHALL BE COORDINATED WITH THE WORK OF ALL OTHER DIVISIONS/TRADES PRIOR TO COMMENCEMENT OF WORK. AVOID INTERFERENCES WITH THE PROGRESS OF OTHER DIVISIONS/TRADES.
12. LOCATIONS OF VFD'S, DISCONNECTS, MOTOR STARTERS, ETC. FOR HVAC EQUIPMENT ARE DIAGRAMMATIC ON THE PLAN DRAWINGS. EXACT LOCATIONS ARE TO BE COORDINATED WITH CONTRACTOR'S COORDINATION DRAWINGS PRIOR TO ROUGHING IN TO ENSURE PROPER NEC CLEARANCES AND APPROPRIATE MOUNTING SURFACE.
13. DRAWINGS ARE DIAGRAMMATIC AND INDICATE GENERAL ARRANGEMENT OF SYSTEMS. PROVIDE COMPONENTS INDICATED ON RISER DIAGRAMS WHETHER OR NOT INDICATED ON PLANS AND VICE VERSA.
14. ROUTING OF CONDUIT IS DIAGRAMMATIC AND NOT INTENDED TO SHOW REQUIRED OFFSETS AND DETAILS. COORDINATE EXACT ROUTING WITH FIELD CONDITIONS AND OTHER TRADES.
15. REFER TO ARCHITECTURAL, MECHANICAL, PLUMBING, FIRE PROTECTION, CIVIL, LANDSCAPE, INTERIOR DESIGN, TECHNOLOGY, STRUCTURAL, AND KITCHEN EQUIPMENT DRAWINGS FOR RELATED INFORMATION AND ADDITIONAL INSTALLATION REQUIREMENTS TO BE PERFORMED AS PART OF THE WORK. REFER TO ARCHITECTURAL ELEVATIONS FOR EXACT MOUNTING HEIGHT AND LOCATIONS.
16. WHERE A DISCREPANCY OR CONFLICT IS FOUND BETWEEN ONE DRAWING AND ANOTHER, OR BETWEEN A DRAWING AND APPLICABLE SPECIFICATIONS, NOTIFY THE ARCHITECT/ENGINEER IMMEDIATELY IN WRITTEN FORM. IN GENERAL, THE MOST STRINGENT REQUIREMENT SHALL GOVERN UNLESS THE DISCREPANCY CONFLICTS WITH APPLICABLE CODES OR OWNER'S DESIGN STANDARDS, WHEREIN THE CODE OR OWNER'S DESIGN STANDARDS SHALL GOVERN.
17. COORDINATE ALL PROJECT SCHEDULING AND PHASING REQUIREMENTS WITH ARCHITECT/ENGINEER AND OWNER PRIOR TO SUBMITTING BID PRICE. THIS PROJECT MAY REQUIRE PHASING SEQUENCES AND POTENTIAL PREMIUM TIME WORK AND ALL COSTS FOR SUCH SHALL BE INCLUDED IN THE BID PRICE. PROVIDE ADEQUATE WORK FORCE AND EQUIPMENT, AND INCLUDE PREMIUM TIME AS MAY BE REQUIRED IN ORDER TO ADHERE TO THE PROJECT SCHEDULE. ADDITIONALLY, ENSURE THAT LONG LEAD ITEMS DO NOT IMPACT THE PROJECT'S SCHEDULE OR PHASING.
18. ANY TEMPORARY INTERRUPTION ON POWER REQUIRED FOR THE SYSTEM TIE-IN OR SWITCHOVER FOR ANY PORTION OF THE ELECTRICAL SYSTEM SHALL BE PRE-APPROVED IN WRITING BY THE OWNER AND SCHEDULED IN ADVANCE.
19. CONDUCT WORK OPERATIONS AND DEBRIS REMOVAL IN A MANNER THAT ENSURES MINIMUM INTERFERENCE WITH NORMAL BUSINESS OPERATIONS, TRAFFIC, PARKING, ETC. ONGOING IN ADJACENT OCCUPIED SPACES OR FACILITIES. PROVIDE ALL THAT IS REQUIRED TO EFFECTIVELY PROTECT SURROUNDING OCCUPANTS, EQUIPMENT, FINISHES, FURNITURE, ETC. FROM DAMAGE OR EXCESSIVE NOISE THROUGHOUT THE DURATION OF THIS PROJECT. CONTRACTOR IS RESPONSIBLE FOR ANY LOSSES OR DAMAGE. ANY DAMAGE RESULTING FROM THE FAILURE TO ADHERE TO THIS REQUIREMENT. RESTORE DAMAGED ELEMENTS TO ORIGINAL CONDITION BY THE CONTRACTOR TO THE SATISFACTION OF THE ARCHITECT/ENGINEER AND OWNER, AT NO ADDITIONAL COSTS. REPORT OF ANY SUCH OCCURRENCE TO THE ARCHITECT/ENGINEER AND OWNER IMMEDIATELY AND AWAIT WRITTEN DIRECTION PRIOR TO PROCEEDING WITH REPAIRS.
20. COORDINATE THE LOCATION OF ALL LIGHT FIXTURES, DEVICES AND BOXES WITH WINDOWS, MIRRORS, MILLWORK, CABINETS, GLASS CURTAIN WALLS, AND GLASS WALLS PRIOR TO INSTALLATION OF CONDUITS OR BOXES. REVIEW ALL CONTRACT DRAWINGS TO ASCERTAIN ANY CONFLICTS PRIOR TO BIDDING. OBTAIN CLARIFICATION FROM A/E PRIOR TO BID. CONTRACTOR SHALL NOT BE ENTITLED TO ADDITIONAL COMPENSATION FOR WORK REQUIRED TO RELOCATE OUTLET BOXES OR RACEWAYS FOR COORDINATION WITH OTHER TRADE'S WORK.
21. THE EXCLUSIVELY DEDICATED SPACE EXTENDING FROM FLOOR TO 6' ABOVE EQUIPMENT OR STRUCTURAL CEILING, WHICHEVER DISTANCE IS LOWER, WITH A WIDTH AND DEPTH OF THE PANELBOARD OR SWITCHBOARD MUST BE CLEAR OF ALL PIPING, DUCTS, EQUIPMENT FOREIGN TO THE ELECTRICAL EQUIPMENT OR ARCHITECTURAL APPURTENANCES IN ACCORDANCE WITH NEC.
22. PROVIDE ALL TEMPORARY NORMAL LIGHTING, EMERGENCY LIGHTING AND EXIT SIGNAGE REQUIRED DURING THE PROJECT CONSTRUCTION PHASE.
23. THE INFRASTRUCTURE FOR THE ACCESS CONTROL/ CCTV OR SECURITY ELECTRONICS SYSTEM (CONDUITS, ELECTRICAL BOXES) SHALL BE INSTALLED BY DIVISION 26. THE ACCESS CONTROL/CCTV OR SECURITY ELECTRONICS SYSTEM CONTRACTOR SHALL PROVIDE AND INSTALL THE WIRE AND CABLE FOR THE SYSTEM AND ALL REQUIRED EQUIPMENT. INSTALLATION OF THE CONDUITS AND ELECTRICAL BOXES SHALL BE UNDER THE DIRECT SUPERVISION OF THE ACCESS CONTROL/ CCTV SYSTEM CONTRACTOR. COORDINATE EXACT LOCATIONS OF DEVICES, RACEWAY LOCATIONS, SIZES AND QUANTITY, CONDUIT STUB-UPS PRIOR TO ROUGH IN.
24. THE INFRASTRUCTURE FOR THE VOICE/DATA TELECOMMUNICATIONS SYSTEM (CONDUITS, ELECTRICAL BOXES) SHALL BE INSTALLED BY DIVISION 26. THE TELECOMMUNICATIONS CONTRACTOR SHALL PROVIDE AND INSTALL THE WIRE AND CABLE FOR THE SYSTEM AND ALL REQUIRED EQUIPMENT AND COMPONENTS. INSTALLATION OF THE CONDUITS AND ELECTRICAL BOXES SHALL BE UNDER THE DIRECT SUPERVISION OF THE TELECOMMUNICATIONS CONTRACTOR. COORDINATE EXACT LOCATIONS OF DEVICES, RACEWAY LOCATIONS, SIZES AND QUANTITY, CONDUIT STUB-UPS PRIOR TO ROUGH IN.
25. PROVIDE 120V 20A 5-20R RECEPTACLE AT ALL FAN COIL UNITS FOR CONDENSATE PUMP POWER AND HOT WATER RECIRCULATING PUMPS, WHETHER SHOWN ON PLANS OR NOT. RECEPTACLE IS TO BE CONNECTED TO NEAREST 120V RECEPTACLE CIRCUIT.
26. PROVIDE 120V CONNECTION TO ALL MOTORIZED DAMPERS INDICATED ON MECHANICAL PLANS, WHETHER SHOWN ON DIVISION 26 DRAWINGS OR NOT. FIRE/SMOKE DAMPER CIRCUITS ARE TO BE PROVIDED FROM EMERGENCY BRANCH PANEL (LEGALLY REQUIRED BRANCH IF AVAILABLE). MOTORIZED DAMPERS WITHIN THE SAME AREA CAN BE CIRCUITED TO THE SAME CIRCUIT (I.E., DEDICATED CIRCUIT IS NOT REQUIRED).
27. PROVIDE PHONE/DATA OUTLET WITH 1" RACEWAY, AND 120V RECEPTACLE ON DEDICATED CIRCUIT ADJACENT TO EACH AIR HANDLING UNIT FOR CONTROL POWER.
28. PROVIDE 120V DEDICATED CIRCUIT TO EACH AIR HANDLING UNIT WITH SEPARATE CONNECTIONS TO UNIT UV LIGHT, UNIT LIGHTS, UNIT RECEPTACLE, AND BI-POLAR IONIZATION FILTER WHERE PROVIDED. COORDINATE WITH DIVISION 23 SHOP DRAWINGS.
29. UNLESS NOTED AS EXISTING, ALL ELECTRICAL INDICATED ON THE CONTRACT DOCUMENTS SHALL BE NEW, SHALL BE U.L. LISTED, AND SHALL BEAR A U.L. LABEL. WHERE NO U.L. LABEL OR LISTING IS AVAILABLE, THE MATERIAL SHALL BE LISTED WITH AN APPROVED, NATIONALLY RECOGNIZED ELECTRICAL TESTING AGENCY.
30. PROVIDE EXPERIENCED, QUALIFIED AND RESPONSIBLE SUPERVISION FOR ALL WORK REQUIRED BY THE CONTRACT DOCUMENTS. ALL ELECTRICAL EQUIPMENT SHALL BE INSTALLED IN A NEAT AND WORKMANLIKE MANNER, TO THE SATISFACTION OF THE ARCHITECT/ENGINEER AND OWNER.
31. THE ELECTRICAL PORTION OF THE CONTRACT DOCUMENTS ARE COORDINATED WITH THE DESIGN BASIS EQUIPMENT SPECIFIED BY DIVISION 26 AND OTHER DIVISIONS. WHERE THE CONTRACTOR ELECTS TO SUBSTITUTE A PRODUCT IN LIEU OF PROVIDING THE DESIGN BASIS, AND SAID SUBSTITUTION IS ACCEPTED BY THE A/E AND OWNER, THE CONTRACTOR SHALL MAKE ALL CONNECTIONS TO THE ELECTRICAL SYSTEM NECESSARY IN ORDER TO ENSURE A COMPLETE AND OPERATIONAL INSTALLATION OF THE EQUIPMENT AT NO ADDITIONAL COSTS. WHERE THE CONTRACTOR'S DESIGN SUBSTITUTION RESULTS IN THE NEED FOR THE ENGINEER TO REVISE THE CONTRACT DOCUMENTS, THE ENGINEER RESERVES THE RIGHT TO REQUEST COMPENSATION FROM THE CONTRACTOR FOR SAID SERVICES.
32. MAINTAIN A CURRENT AND ACCURATE SET OF PROJECT RECORD DOCUMENTS (AS-BUILTS) AT THE SITE THROUGHOUT THE DURATION OF THE PROJECT. RECORD DRAWINGS SHALL BE UPDATED EACH DAY TO REFLECT THE ACTUAL LOCATIONS, SIZES, ROUTING, ETC. OF EACH PORTION OF THE ELECTRICAL SYSTEM AFFECTED BY THIS WORK. A FINAL SET OF RECORD DOCUMENTS SHALL BE ISSUED TO THE A/E FOR REVIEW AND THEN SUBMITTED TO THE OWNER WITHIN 30 DAYS AFTER THE DATE OF FINAL ACCEPTANCE. PROVIDE RECORD DRAWINGS OF THE ACTUAL INSTALLATION INCLUDING SINGLE LINE DIAGRAM, POWER RISER DIAGRAM OF THE BUILDING ELECTRICAL DISTRIBUTION SYSTEM, SITE PLANS AND ALL ELECTRICAL FLOOR PLANS, DETAILS, PANEL SCHEDULES, ETC.
33. OWNER FURNISHED EQUIPMENT: VERIFY AND COORDINATE ELECTRICAL ROUGH IN REQUIREMENTS FOR OWNER FURNISHED EQUIPMENT PRIOR TO ROUGH IN.
34. WHERE SUBMITTED EQUIPMENT REQUIRES REVISION TO OVERCURRENT PROTECTION, CONDUIT OR WIRING, MAKE CHANGES IN ACCORDANCE WITH APPLICABLE CODES.

APPLICABLE CODES

1. NATIONAL FIRE PROTECTION ASSOCIATION (NFPA), INCLUDING (BUT NOT LIMITED TO):
   a. NATIONAL ELECTRICAL CODE (NEC), NFPA 70 - 2023
   b. NATIONAL FIRE ALARM CODE, NFPA 72 - 2022
   c. LIFE SAFETY CODE, NFPA 101 – 2021
   d. EMERGENCY AND STANDBY POWER SYSTEMS, NFPA 110 – 2022
2. AMERICAN NATIONAL STANDARDS INSTITUTE (ANSI), INCLUDING (BUT NOT LIMITED TO):
   a. NATIONAL ELECTRICAL SAFETY CODE, ANSI C2
3. OCCUPATIONAL SAFETY AND HEALTH ACT (OSHA)
4. FACILITY GUIDELINES INSTITUTE (FGI):
   a. GUIDELINES FOR DESIGN AND CONSTRUCTION OF HOSPITALS AND OUTPATIENT FACILITIES
5. FEDERAL COMMUNICATION COMMISSION (FCC)
6. NATIONAL ELECTRICAL MANUFACTURERS ASSOCIATION (NEMA)
7. INSULATED CABLE ENGINEERS ASSOCIATION (ICEA)
8. INSTITUTE OF ELECTRICAL AND ELECTRONICS ENGINEERS (IEEE)
9. NATIONAL ELECTRICAL TESTING ASSOCIATION (NETA)
10. AMERICAN SOCIETY OF TESTING AND MATERIALS (ASTM)
11. ILLUMINATION ENGINEERING SOCIETY (IES)
12. ANTI-FRICTION BEARING MANUFACTURERS ASSOCIATION (AFBMA)
13. BUILDING OFFICIALS AND CODE ADMINISTRATORS INTERNATIONAL, INC. (BOCA)
14. INTERNATIONAL CODE COUNCIL (ICC):
   a. INTERNATIONAL BUILDING CODE (IBC)
15. UNIFORM BUILDING CODE (UBC)
16. COMBINED ANSI/ASHRAE/IES STANDARD 90.1 – "ENERGY STANDARD FOR BUILDINGS EXCEPT LOW-RISE RESIDENTIAL BUILDINGS"
17. NATIONAL ELECTRICAL CONTRACTORS ASSOCIATION INSTALLATION STANDARDS (NECA)
18. AMERICANS WITH DISABILITIES ACT (ADA)
19. APPLICABLE STATE AND LOCAL CODES, AMENDMENTS, REGULATIONS, AND PRACTICES.
20. APPLICABLE REGULATORY REQUIREMENTS AND ADVISORY PRACTICES OF APPROPRIATE
   a. AUTHORITIES HAVING JURISDICTION (AHJs).
21. APPLICABLE STANDARDS, REGULATIONS, AND PRACTICES OF THE OWNER.

WHERE THERE IS A DISCREPANCY BETWEEN ABOVE GENERAL NOTES AND SPECIFICATIONS, WHERE APPLICABLE, SPECIFICATIONS SHALL BE FOLLOWED

Revisions	Date

CONSULTANT

Above Group
ENGINEERING. DESIGN. CONSULTING.
www.abovegroupinc.com
COA/CA Lic. No. 31120
305 East Dr., Suite H,
Melbourne, Florida 32904
PH: 321.345.9026

ARCHITECT/ENGINEER OF RECORD

RDC◆JPA ARCHITECTURE
524 Fernwood Drive, Altamonte Springs, Florida 32701 | www.rdcjpa.com | 800.362.1523

STAMP

Office of Construction and Facilities Management

VA U.S. Department of Veterans Affairs

Drawing Title: ELECTRICAL GENERAL NOTES	Phase: BID DOCUMENTS	Project Title: GAINESVILLE DATA CENTER	Project Number: 573-21-106
Approved: STATION CHIEF - EDWIN BURNETT	FULLY SPRINKLERED	Location: GAINESVILLE, FL	Building Number
		Issue Date: 04.20.2026 / Checked: BMS / Drawn: IMW	Drawing Number: E-002

Autodesk Docs://Florida, Gainesville VA-152085_VA Gainesville_Data Ctr_R25_MEPT.rvt
4/13/2026 1:19:32 PM
VA FORM 08 - 6231

CODED NOTES:

1. ROUTE CONDUITS UP FROM SWITCHBOARD MSGRB AND TO THE EASTERN WALL OF THE MAIN ELECTRICAL ROOM D089-1. CORE DRILL FOR RACEWAY ENTRY AND PROVIDE FIRE-RATED LINK SEAL WHERE CORE DRILLING IS TAKING PLACE. CONTRACTOR TO PROVIDE GROUND PENETRATING RADAR (GPR) AND COORDINATE CORE DRILLING LOCATIONS AROUND THE EXISTING STRUCTURAL ELEMENTS WITHIN THE SLAB.
2. ELECTRICAL CONDUITS SHALL TRANSITION OUTSIDE TO BE ROUTED IN NEW DUCT BANK. COORDINATE EXACT LOCATIONS AND INSTALLATION REQUIREMENTS WITH CIVIL AND TECHNOLOGY DRAWINGS PRIOR TO INSTALLATION. SEE DUCT BANK SECTION DETAIL AND TECHNOLOGY DRAWINGS FOR ADDITIONAL INFORMATION.
3. ELECTRICAL CONDUITS SHALL TRANSITION INSIDE TO SERVE NEW DISTRIBUTION PANELBOARD NSWBD.
4. PROVIDE LINK SEAL OR EQUAL HYDROSTATIC AT THIS LOCATION.
5. PROVIDE NEW CONDUIT HANGER SUPPORTS FOR CONDUIT RUNNING IN PIPE BASEMENT HUNG FROM PIPE BASEMENT CEILING. EXISTING CONDUIT HANGER SUPPORTS MAY BE UTILIZED IF AVAILABLE. REFER TO CONDUIT HANGER DETAIL FOR ADDITIONAL INFORMATION.
6. 1" CONDUIT WITH 12 STRAND SINGLE MODE FIBER FOR CONNECTION FROM DATA CENTER RTU UNIT FOR ATS AND GENERATOR BACK TO EXISTING EMERGENCY SYSTEM ANNUNCIATION SYSTEM WITHIN ESSENTIAL SYSTEMS ROOM C087-1. CONTRACTOR SHALL PROVIDE ALL PARTS AND PROGRAMMING TO CONVERT FIBER PER SELECTED MANUFACTURER AND PROGRAM TO INTEGRATE INTO EXISTING ANNUNCIATION SYSTEM LOCATED IN THE MAIN ELECTRICAL SHOP AND MAIN DISPATCH ROOM.
7. ELECTRICAL CONDUITS SHALL TRANSITION OUTSIDE AT THIS LOCATION. CORE DRILL FOR RACEWAY ENTRY AND PROVIDE FIRE-RATED LINK SEAL WHERE CORE DRILLING IS TAKING PLACE.

1 DATA CENTER - ELECTRICAL SITE PLAN
1" = 40'-0"

N
0 20' 40' 80' 120'
1" = 40'

Revisions		Date

CONSULTANT

Above Group
ENGINEERING. DESIGN. CONSULTING.

www.abovegroupinc.com
COA/CA Lic. No. 31120

305 East Dr., Suite H,
Melbourne, Florida 32904
PH: 321.345.9026

ARCHITECT/ENGINEER OF RECORD

RDC JPA
ARCHITECTURE

524 Fernwood Drive, Altamonte Springs, Florida 32701 | www.rdcjpa.com | 800.362.1523

STAMP

BRANDON M. BARNETT
LICENSE
No. 92822
STATE OF
FLORIDA
PROFESSIONAL ENGINEER

Office of Construction and Facilities Management

VA U.S. Department of Veterans Affairs

Drawing Title: ELECTRICAL SITE PLAN	Phase: BID DOCUMENTS	Project Title: GAINESVILLE DATA CENTER	Project Number: 573-21-106
			Building Number:
Approved: STATION CHIEF - EDWIN BURNETT	FULLY SPRINKLERED	Location: GAINESVILLE, FL	Drawing Number: E-100
		Issue Date: 04.20.2026 / Checked: BMS / Drawn: IMW	

VA FORM 08 - 6231

Autodesk Docs://Florida, Gainesville VA/122085_VA Gainesville_Data Ctr_R25_MEPT.rvt

4/13/2026 1:19:47 PM

DRAWING NOTES:

1. REFER TO VA LIGHTING DESIGN MANUAL AND ISTS FOR ADDITIONAL INFORMATION REGARDING TARGET FOOT CANDLE REQUIREMENTS.

CODED NOTES:

1. EMERGENCY LIGHTING POWER PACKS SHALL BE PROVIDED WITH THE REQUIRED NORMAL POWER SENSING CIRCUITS FROM THE AREA IN WHICH THEY ARE LOCATED.
2. EGRESS LIGHTING SHALL BE CONTROLLED WITH A UL924 CONTROL RELAY TO ENSURE THAT THE EMERGENCY LIGHTING WILL BE FORCED TO FULL BRIGHTNESS UPON LOSS OF NORMAL POWER.
3. PROVIDE LIGHTING CONTROL PANEL WITH ACCOMPANYING GRAPHIC TOUCH SCREEN CONTROLLER MOUNTED ADJACENT TO THE PANEL FOR TIME CLOCK CONTROL OF AREAS PER LIGHTING CONTROL MATRIX. BASIS OF DESIGN IS THE ACUITY NLIGHT ECLYPSE AND ACUITY NLIGHT NGWY2 GFX.

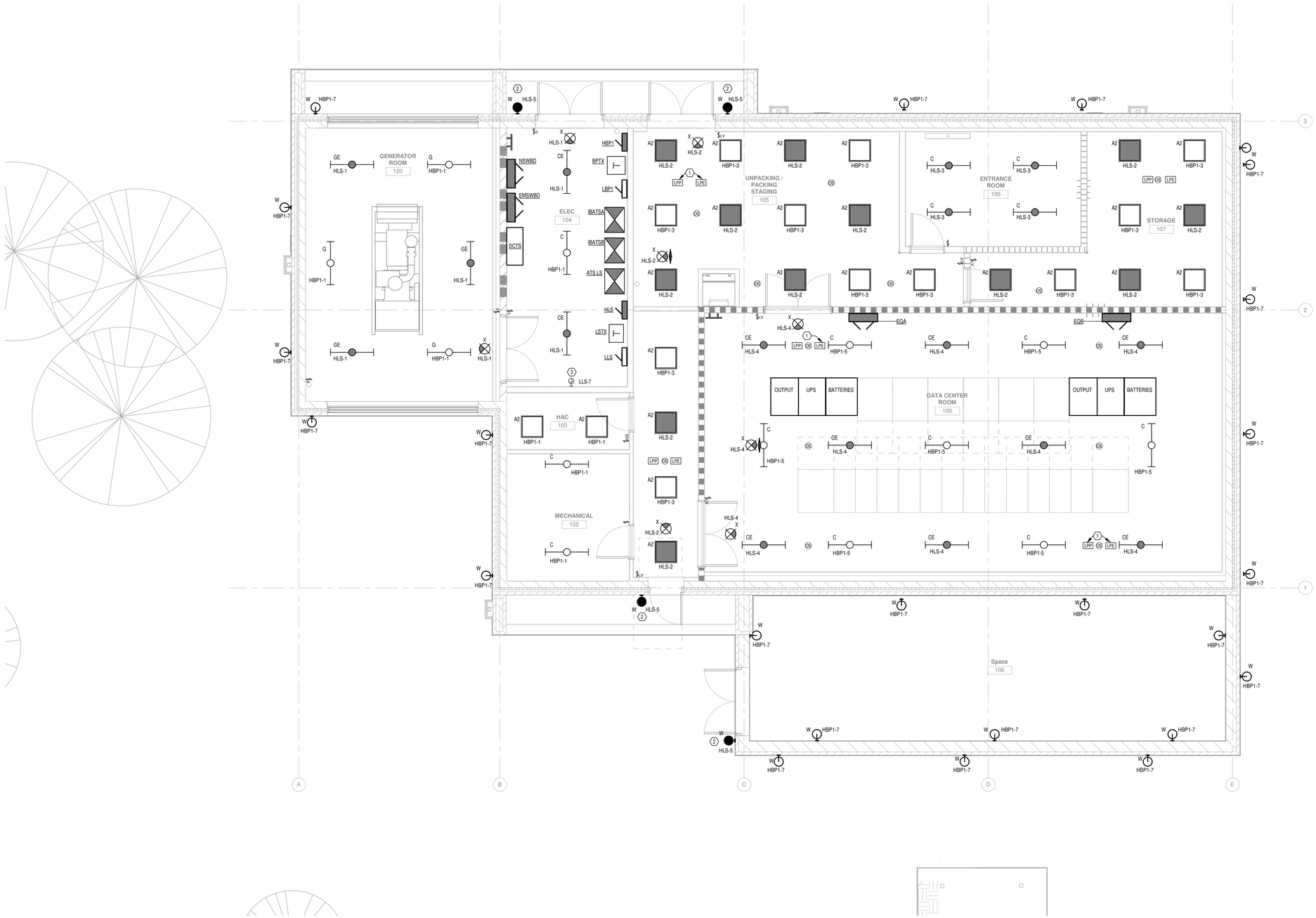

1 DATA CENTER - FIRST FLOOR - LIGHTING NEW WORK
1/4" = 1'-0"

N

0 2' 4' 8' 12'
1/4" = 1'-0"

CONSULTANT	Above Group ENGINEERING. DESIGN. CONSULTING. www.abovegroupinc.com COA/CA Lic. No. 31120 305 East Dr., Suite H, Melbourne, Florida 32904 PH: 321.345.9026
ARCHITECT/ENGINEER OF RECORD	RDC JPA ARCHITECTURE 524 Fernwood Drive, Altamonte Springs, Florida 32701 | www.rdcjpa.com | 800.362.1523
STAMP	No. 92822 STATE OF FLORIDA
Office of Construction and Facilities Management	VA U.S. Department of Veterans Affairs
Drawing Title	ELECTRICAL FLOOR PLANS - DATA CENTER - LIGHTING
Phase	BID DOCUMENTS
Project Title	GAINESVILLE DATA CENTER
Project Number	573-21-106
Building Number	43
Approved:	STATION CHIEF - EDWIN BURNETT
Location	GAINESVILLE, FL
Drawing Number	EL101
Issue Date	04.20.2026
Checked	BMS
Drawn	IMW
Revisions / Date	

Autodesk Docs://Florida, Gainesville VA 122085_VA Gainesville_Data Ctr_R25_MEPT.rvt
4/13/2026 1:19:52 PM

VA FORM 08 - 6231

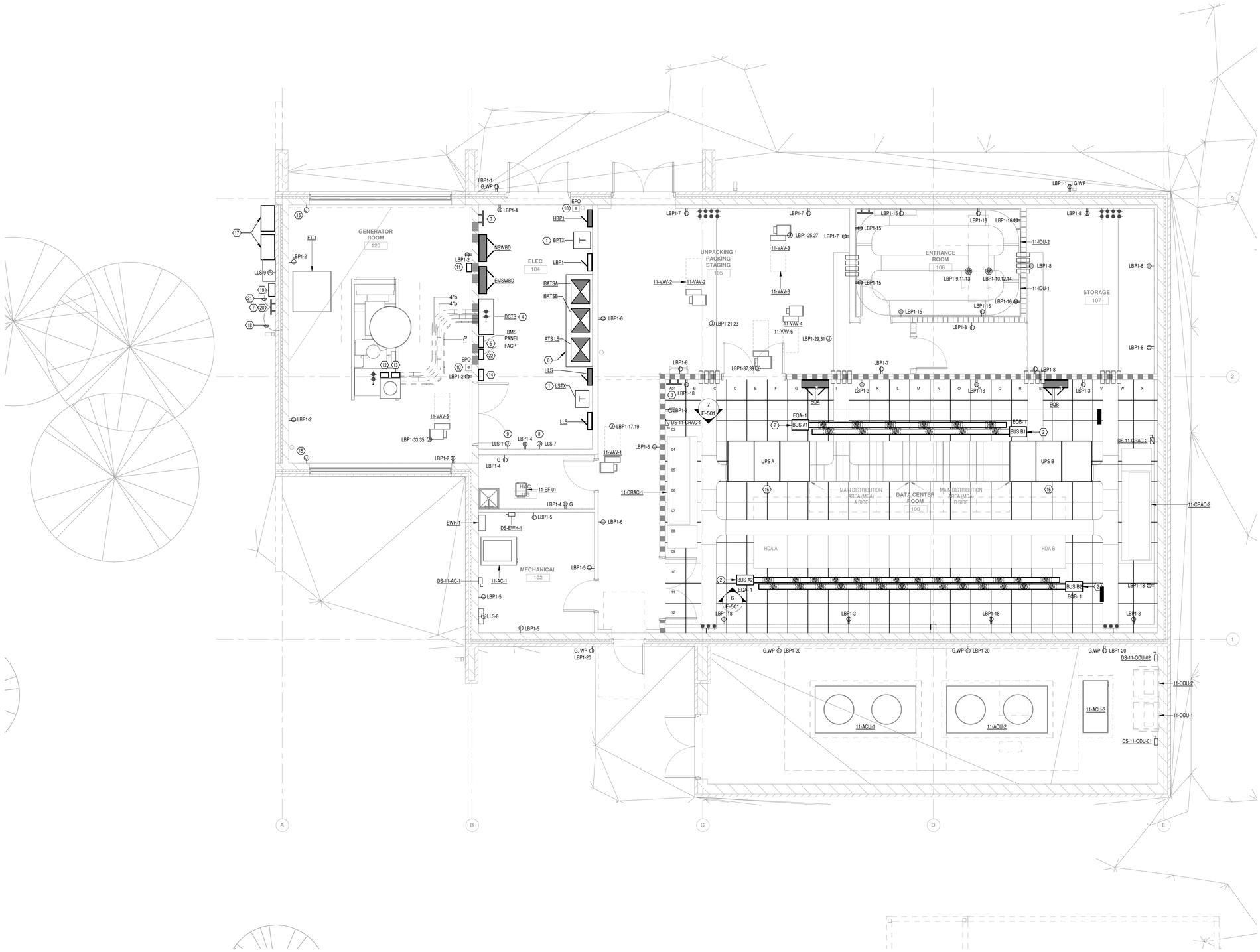

1 DATA CENTER - FIRST FLOOR - ELECTRICAL EQUIPMENT NEW WORK
1/4" = 1'-0"

N

0 2' 4' 8' 12'
1/4" = 1'-0"

DRAWING NOTES:

1. PROVIDE ALL GROUNDING AND BONDING PER NEC AND VA ISTS TIL VERSION 4.0.
2. ELECTRICAL CONTRACTOR IS RESPONSIBLE FOR PROVIDING CABLING BETWEEN BATTERY CABINETS AND UPS SYSTEM.

CODED NOTES:

1. PROVIDE NEW 4" HOUSE KEEPING PAD FOR NEW TRANSFORMER THAT EXTENDS 6" BEYOND EQUIPMENT FOOTPRINT.
2. PROVIDE STARLINE BUSWAY (OR EQUIVALENT) WITH METERED END FEED UNITS MOUNTED BEHIND AND ABOVE DATA CENTER RACKS. PROVIDE 20A L5-20R RECEPTACLE WHIPS DOWN TO RACKS FOR POWER. PROVIDE ONE DEDICATED CIRCUIT BREAKER PER RECEPTACLE. MARK AND COLOR-CODE ONE BUSWAY AS 'A' PATH AND ONE AS 'B' PATH. REFER TO RACEWAY COLOR SCHEDULE ON SHEET E-601 FOR ADDITIONAL INFORMATION.
3. MOUNT GROUND BAR AT 8'-0" ABOVE FINISHED FLOOR.
4. WALL MOUNTED DUAL BREAKER DOCKING STATION. REFER TO ONE-LINE DIAGRAM FOR ADDITIONAL INFORMATION.
5. PROVIDE ELECTRICAL CONNECTION TO BUILDING/CAMPUS BMS SYSTEM.
6. PROVIDE NEW CONTINUOUS 6" HOUSEKEEPING PAD THAT EXTENDS 6" BEYOND EQUIPMENT FOOTPRINT.
7. NEW MAIN GROUND BAR. REFER TO DETAIL ON SHEET E501 FOR ADDITIONAL INFORMATION.
8. CIRCUIT FOR LIGHTING CONTROL PANEL.
9. CIRCUIT FOR FIRE ALARM CONTROL PANEL.
10. PROVIDE GENERATOR EMERGENCY POWER OFF BUTTON. COORDINATE EXACT LOCATION AND INSTALLATION REQUIREMENTS WITH ARCHITECT AND GENERATOR MANUFACTURER PRIOR TO INSTALLATION.
11. PROVIDE 120V 1PH CONNECTION FOR BATTERY CHARGER. COORDINATE EXACT LOCATION AND INSTALLATION REQUIREMENTS WITH ARCHITECT AND GENERATOR MANUFACTURER PRIOR TO INSTALLATION.
12. PROVIDE 120V 1PH CONNECTION FOR JACKET HEATER. COORDINATE EXACT LOCATION AND INSTALLATION REQUIREMENTS WITH ARCHITECT AND GENERATOR MANUFACTURER PRIOR TO INSTALLATION.
13. PROVIDE 120V 1PH CONNECTION FOR GENERATOR CONTROLLER. COORDINATE EXACT LOCATION AND INSTALLATION REQUIREMENTS WITH ARCHITECT AND GENERATOR MANUFACTURER PRIOR TO INSTALLATION.
14. PROVIDE 120V 1PH CONNECTION FOR ATS AND GENERATOR RTU UNIT. COORDINATE EXACT LOCATION AND INSTALLATION REQUIREMENTS WITH ARCHITECT AND GENERATOR MANUFACTURER PRIOR TO INSTALLATION.
15. PROVIDE 120V 1PH CONNECTION FOR BLAST LOUVER. COORDINATE EXACT LOCATION AND INSTALLATION REQUIREMENTS WITH MECHANICAL CONTRACTOR PRIOR TO INSTALLATION.
16. TOTAL MAXIMUM FOOTPRINT OF UPS TO BE 95.2" W x 42" D x 74" H.
17. PROVIDE EXTERIOR TEMPORARY GENERATOR CONNECTION BOX AND EXTERIOR LOAD BANK CONNECTION BOX. BASIS OF DESIGN IS TRYSTAR GDS-1.
18. #3/0 AWG TINNED COPPER BONDING JUMPER EXOTHERMICALLY WELDED TO STRUCTURAL STEEL.
19. GROUNDING SYSTEM FOR FUEL TRUCK UNLOADING OPERATIONS. PROVIDE EARTH-RITE II RTR (BASIS OF DESIGN) WITH RETRACTABLE CABLE REEL OPTION OR APPROVED EQUAL.
20. PROVIDE 4" (W) X 12" (L), 1/4" THICK HARD-DRAWN TINNED SOLID COPPER GROUND BAR. PROVIDE A MINIMUM OF FIVE (5) 7/16" PREDRILLED HOLES. PROVIDE STAINLESS STEEL STANDOFF BRACKETS THAT ALLOW 4" CLEARANCE AND UL891 STANDOFF INSULATORS.
21. PROVIDE TINNED COPPER BONDING JUMPERS PER MANUFACTURER'S REQUIREMENTS.
22. PROVIDE 120V 1PH CONNECTION FOR FACP. COORDINATE EXACT LOCATION AND INSTALLATION REQUIREMENTS WITH FIRE ALARM CONTRACTOR AND MANUFACTURER TO INSTALLATION.

Autodesk Docs://Florida_Gainesville VA\122685_VA Gainesville_Data Ctr_P&S_MEP7.rvt
4/13/2026 11:19:56 PM

Revisions	Date

CONSULTANT

Above Group
ENGINEERING. DESIGN. CONSULTING.
www.abovegroupinc.com
COA/CA Lic. No. 31120
305 East Dr., Suite H,
Melbourne, Florida 32904
PH: 321.345.9026

ARCHITECT/ENGINEER OF RECORD

RDC◆JPA
ARCHITECTURE
524 Fernwood Drive, Altamonte Springs, Florida 32701 | www.rdcjpa.com | 800.362.1523

STAMP

LICENSED ARCHITECT — No. 92822 — STATE OF FLORIDA

Office of Construction and Facilities Management

U.S. Department of Veterans Affairs

Drawing Title: ELECTRICAL FLOOR PLANS - DATA CENTER - POWER	Phase: BID DOCUMENTS
Approved: STATION CHIEF - EDWIN BURNETT	FULLY SPRINKLERED

Project Title: GAINESVILLE DATA CENTER	Project Number: 573-21-106
	Building Number: 43
Location: GAINESVILLE, FL	Drawing Number: EP101
Issue Date: 04.20.2026	Checked: BMS
	Drawn: IMW

VA FORM 08 - 6231

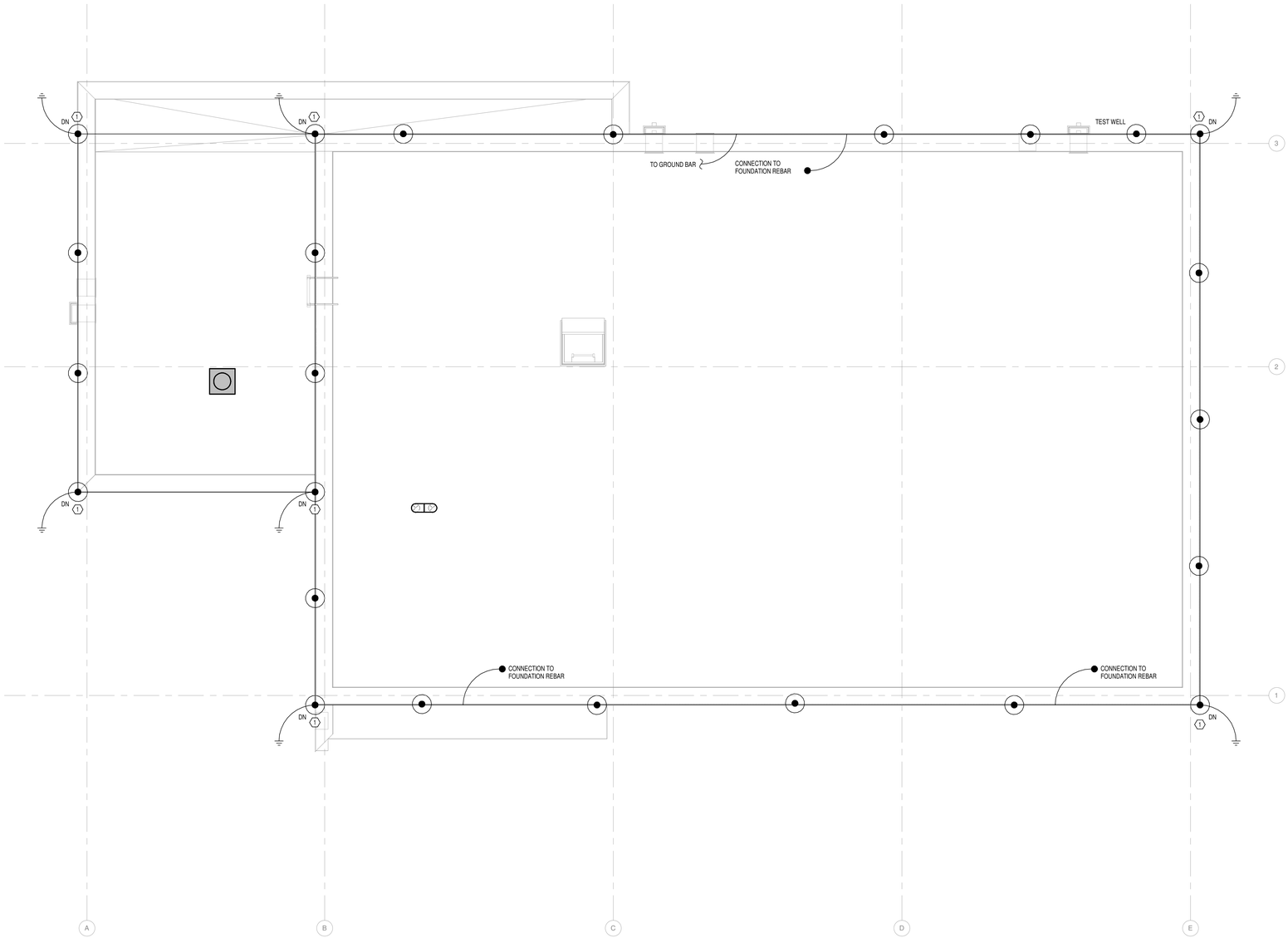

DRAWING NOTES:

1. ALL ROOF DRAINS AND ROOF EQUIPMENT SHALL BE TIED INTO THE LIGHTNING PROTECTION SYSTEM.
2. CONTRACTOR SHALL PROVIDE A COMPLETE UL MASTER LABEL LIGHTING PROTECTION SYSTEM. BOND ALL ROOF MOUNTED EQUIPMENT AND HATCHES TO LIGHTING PROTECTION SYSTEM. LIGHTNING PROTECTION LAYOUT SHOWN ON THIS PLAN IS DIAGRAMMATIC. CONTRACTOR TO SUBMIT A COMPLETE LIGHTNING PROTECTION SYSTEM INCLUDING PLAN INDICATING DEVICE LAYOUT AND GROUNDING.
3. REFER TO ELECTRICAL SPECIFICATIONS FOR FURTHER DETAILS REGARDING LIGHTNING PROTECTION SYSTEM.

CODED NOTES:

(1) PROVIDE LIGHTNING PROTECTION AERIAL TERMINAL ATTACHED TO LIGHTNING PROTECTION SYSTEM. PROVIDE DOWN CONDUCTOR AT THIS LOCATION TO GROUND ROD. PROVIDE CONCEALED RMC CONDUIT FROM GRADE TO 8 FEET AFG TO PROTECT DOWN CONDUCTOR.

1 DATA CENTER - ROOF PLAN - ELECTRICAL NEW WORK
1/4" = 1'-0"

N
0 2' 4' 8' 12'
1/4" = 1'-0"

Revisions	Date

CONSULTANT

Above Group
ENGINEERING. DESIGN. CONSULTING.
www.abovegroupinc.com
COA/CA Lic. No. 31120
305 East Dr., Suite H,
Melbourne, Florida 32904
PH: 321.345.9026

ARCHITECT/ENGINEER OF RECORD

RDC◆JPA
ARCHITECTURE
524 Fernwood Drive, Altamonte Springs, Florida 32701 | www.rdcjpa.com | 800.362.1523

STAMP

Office of Construction and Facilities Management

VA U.S. Department of Veterans Affairs

Drawing Title: ELECTRICAL ROOF PLAN - DATA CENTER	Phase: BID DOCUMENTS	Project Title: GAINESVILLE DATA CENTER	Project Number: 573-21-106
Approved: STATION CHIEF - EDWIN BURNETT			Building Number: 43
	FULLY SPRINKLERED	Location: GAINESVILLE, FL	Drawing Number: EP102
		Issue Date: 04.20.2026 / Checked: BMS / Drawn: IMW	

VA FORM 08 - 6231

Autodesk Docs://Florida, Gainesville VA 122085_VA Gainesville_Data Ctr_R25_MEPT.rvt
4/13/2026 1:19:57 PM

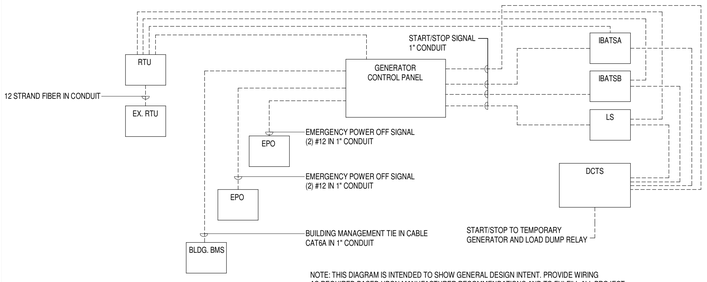

NOTE: THIS DIAGRAM IS INTENDED TO SHOW GENERAL DESIGN INTENT. PROVIDE WIRING AS REQUIRED BASED UPON MANUFACTURER RECOMMENDATIONS AND TO FULFILL ALL PROJECT REQUIREMENTS. CONTRACTOR SHALL PROVIDE ALL PARTS AND PROGRAMMING TO PROVIDE AN OPERATIONAL SYSTEM AND TO INTEGRATE INTO EXISTING ELECTRICAL SYSTEM.

1 GENERATOR CONTROL DIAGRAM
N.T.S.

CONDUCTORS:

1. ALL WIRE SHALL BE SIZED AS SHOWN ON THE DRAWINGS. IF NO SIZE IS SHOWN, THEN WIRE SHALL BE #12 AWG, EXCEPT AS MODIFIED FOR VOLTAGE DROP BY THE TABLE BELOW. REFER TO BRANCH CIRCUIT VOLTAGE DROP TABLES BELOW. BRANCH CIRCUIT WIRING SHALL BE SIZED TO LIMIT THE VOLTAGE DROP TO 3% OF NOMINAL VOLTAGE OR LESS.

120V (BASED ON 1500W LOAD) MIN. CONDUCTOR SIZE	CIRCUIT LENGTH INCREASE FOR VOLTAGE DROP
0 FT - 70 FT	#12 AWG
71 FT - 115 FT	#10 AWG
116 FT - 180 FT	#8 AWG

181 FEET AND LONGER: SUBMIT WIRE SIZE TO ENGINEER OF RECORD FOR WRITTEN APPROVAL.

277V (BASED ON 4155W LOAD) MIN. CONDUCTOR SIZE	CIRCUIT LENGTH INCREASE FOR VOLTAGE DROP
0 FT - 70 FT	#12 AWG
71 FT - 115 FT	#10 AWG
116 FT - 180 FT	#8 AWG

4 CONDUCTORS DETAIL
N.T.S.

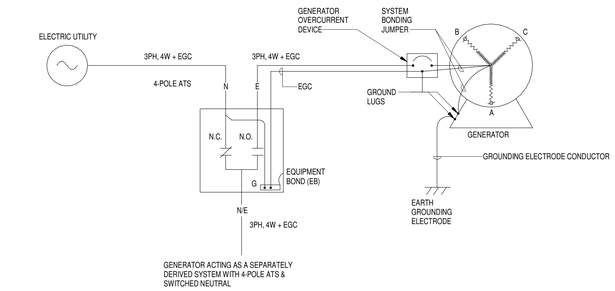

8 GENERATOR GROUNDING 600 VOLTS OR LESS - 4 WIRE
N.T.S.

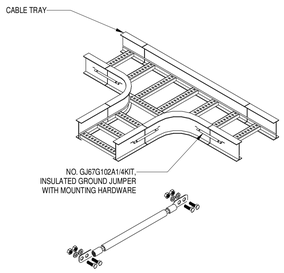

2 CABLE TRAY BOND DETAIL
N.T.S.

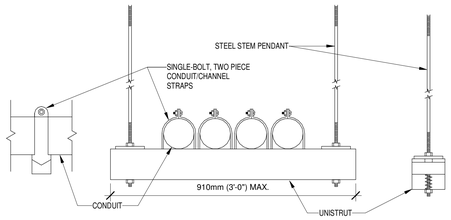

5 CONDUIT HANGER DETAIL
N.T.S.

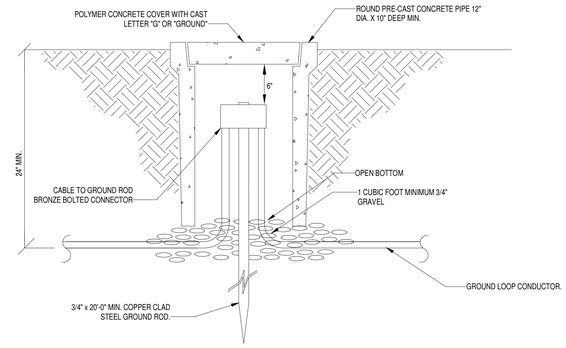

9 GROUND TEST WELL DETAIL
N.T.S.

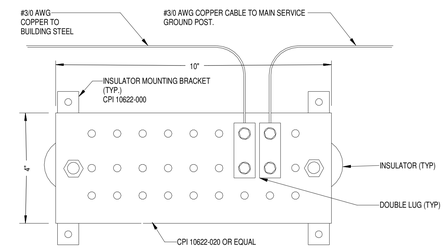

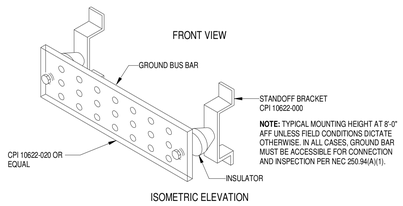

3 TYPICAL GROUND BAR DETAIL
N.T.S.

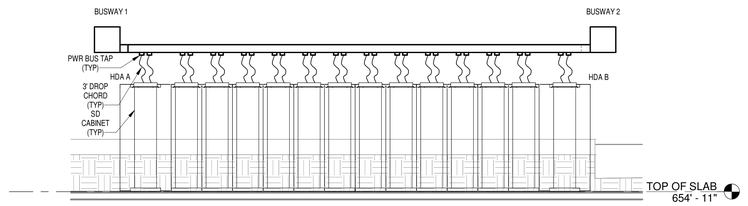

6 TYPICAL BUSWAY ELEVATION 1
N.T.S.

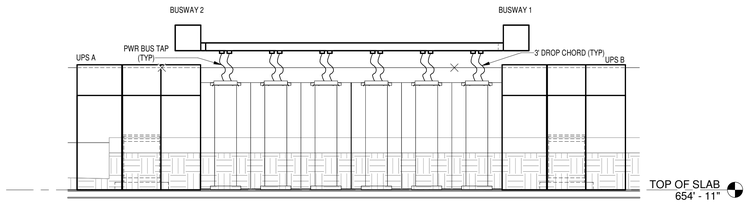

7 TYPICAL BUSWAY ELEVATION 2
N.T.S.

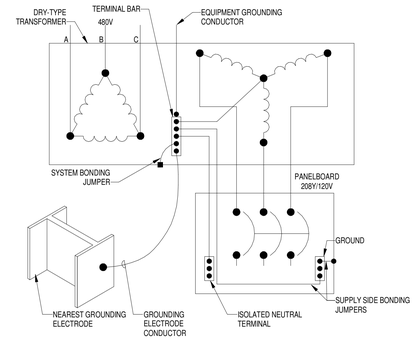

NOTES BASED ON 2017 NEC

1. SYSTEM BONDING JUMPER SIZED PER NEC 250.30(A)(1), AND TABLE 250.102(C)(1), PER 250.28(D)(1).
2. SUPPLY SIDE BONDING JUMPER SIZED PER NEC 250.30(A)(2), 250.102(C) AND TABLE 250.102(C)(1).
3. GROUNDED CONDUCTOR (NEUTRAL) SIZE TO MATCH PHASE CONDUCTORS SIZE AND MATERIAL.
4. GROUNDING ELECTRODE CONDUCTOR SIZED PER NEC 250.30(A)(5) AND TABLE 250.66.

10 TRANSFORMER GROUND DETAIL
N.T.S.

Revisions	Date

CONSULTANT

Above Group
ENGINEERING. DESIGN. CONSULTING.
www.abovegroupinc.com
COA/CA Lic. No. 31120
305 East Dr., Suite H,
Melbourne, Florida 32904
PH: 321.345.9026

ARCHITECT/ENGINEER OF RECORD

RDC◆JPA
ARCHITECTURE
524 Fernwood Drive, Altamonte Springs, Florida 32701 | www.rdcjpa.com | 800.362.1523

STAMP

REGISTERED ARCHITECT
EDWIN M. BURNETT
No. 92822
STATE OF FLORIDA
PROFESSIONAL ENGINEER

Office of Construction and Facilities Management

VA U.S. Department of Veterans Affairs

Drawing Title	ELECTRICAL DETAILS
Phase	BID DOCUMENTS
Approved:	STATION CHIEF - EDWIN BURNETT
	FULLY SPRINKLERED
Project Title	GAINESVILLE DATA CENTER
Project Number	573-21-106
Building Number	
Location	GAINESVILLE, FL
Drawing Number	E-501
Issue Date	04.20.2026
Checked	BMS
Drawn	IMW

Autodesk Docs://Florida, Gainesville VA-152085_VA Gainesville_Data Ctr_R25_MEPT.rvt
4/13/2026 1:20:02 PM

VA FORM 08 - 6231

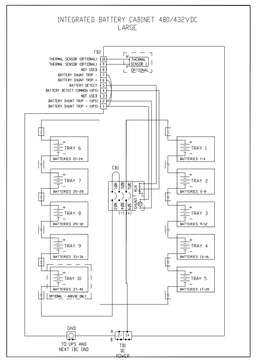

CONTROL WIRING TO UPS (CUSTOMER SUPPLIED)	
IBC CABINET	DESCRIPTION
TB2-1	TO BATTERY SHUNT TRIP + (UPS)
TB2-2	TO BATTERY SHUNT TRIP + (UPS)
TB2-4	TO BATT SELECT (UPS)
TB2-5 *	TO NEXT IBC-L TB2-4
TB2-6	TO NEXT IBC-L TB2-5
TB2-7	TO NEXT IBC-L TB2-2
TB2-9	TO UPS BUILDING ALARM
TB2-10	TO UPS BUILDING ALARM

* FOR LAST IBC-L TB2-5 RETURNS BACK TO BATT SELECT COMMON (UPS) TB2-6

NOTES:
1. SHUNT TRIP WIRES IN PARALLEL FOR MULTIPLE BATTERY CABINETS.
2. BATTERY SELECT WIRED IN SERIES FOR MULTIPLE BATTERY CABINETS.
3. THERMAL SENSOR WIRED IN SERIES FOR MULTIPLE BATTERY CABINETS.

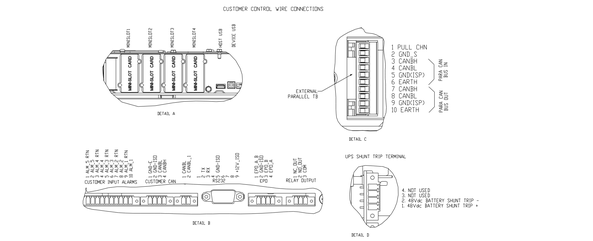

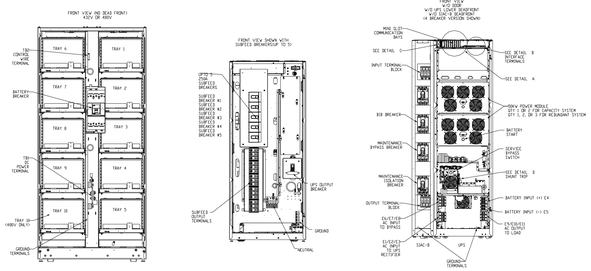

1 UPS SECTIONS DETAIL
N.T.S.

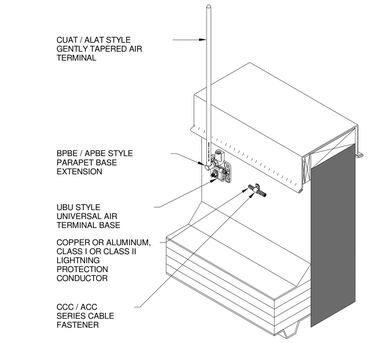

3 PBE - STYLE AIR TERMINAL BASE EXTENSION
N.T.S.

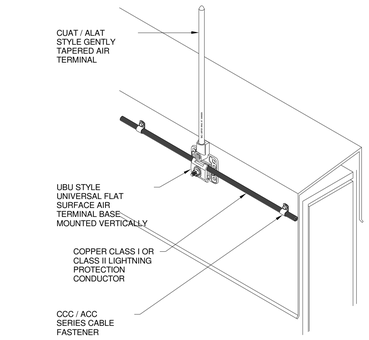

4 UBU - STYLE AIR TERMINAL BASE WITH CC
N.T.S.

2-WAY DUCTBANK

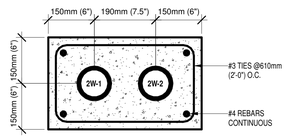

2-WAY DUCTBANK KEY:

2W-1: 4" SCHEDULE 80 PVC CONDUIT WITH BUILDING FEEDERS. REFER TO ONE-LINE DIAGRAM FOR ADDITIONAL INFORMATION.

2W-2: 4" SCHEDULE 80 PVC CONDUIT WITH BUILDING FEEDERS. REFER TO ONE-LINE DIAGRAM FOR ADDITIONAL INFORMATION.

2 DUCT BANK SECTION
N.T.S.

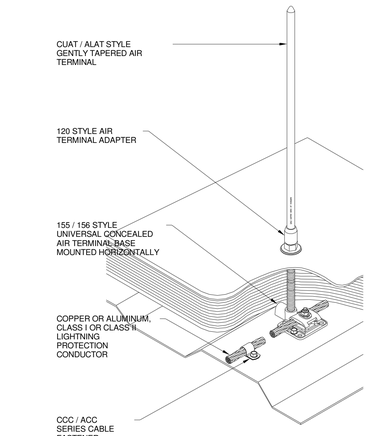

5 155 / 156 - STYLE HORIZONTAL AIR TERMINAL BASE
N.T.S.

Autodesk Docs://Florida, Gainesville VA/122685_VA Gainesville_Data Ctr_P2S_MEPT.rvt
4/13/2026 1:20:04 PM

CONSULTANT

Above Group
ENGINEERING. DESIGN. CONSULTING.
www.abovegroupinc.com
COA/CA Lic. No. 31120
305 East Dr., Suite H,
Melbourne, Florida 32904
PH: 321.345.9026

ARCHITECT/ENGINEER OF RECORD

RDC◆JPA
ARCHITECTURE
524 Fernwood Drive, Altamonte Springs, Florida 32701 | www.rdcjpa.com | 800.362.1523

STAMP

Office of Construction and Facilities Management

VA U.S. Department of Veterans Affairs

Drawing Title	ELECTRICAL DETAILS
Phase	BID DOCUMENTS
Project Title	GAINESVILLE DATA CENTER
Project Number	573-21-106
Building Number	
Approved:	STATION CHIEF - EDWIN BURNETT
Location	GAINESVILLE, FL
Drawing Number	E-502
Issue Date	04.20.2026
Checked	BMS
Drawn	IMW

Revisions	Date

VA FORM 08 - 6231

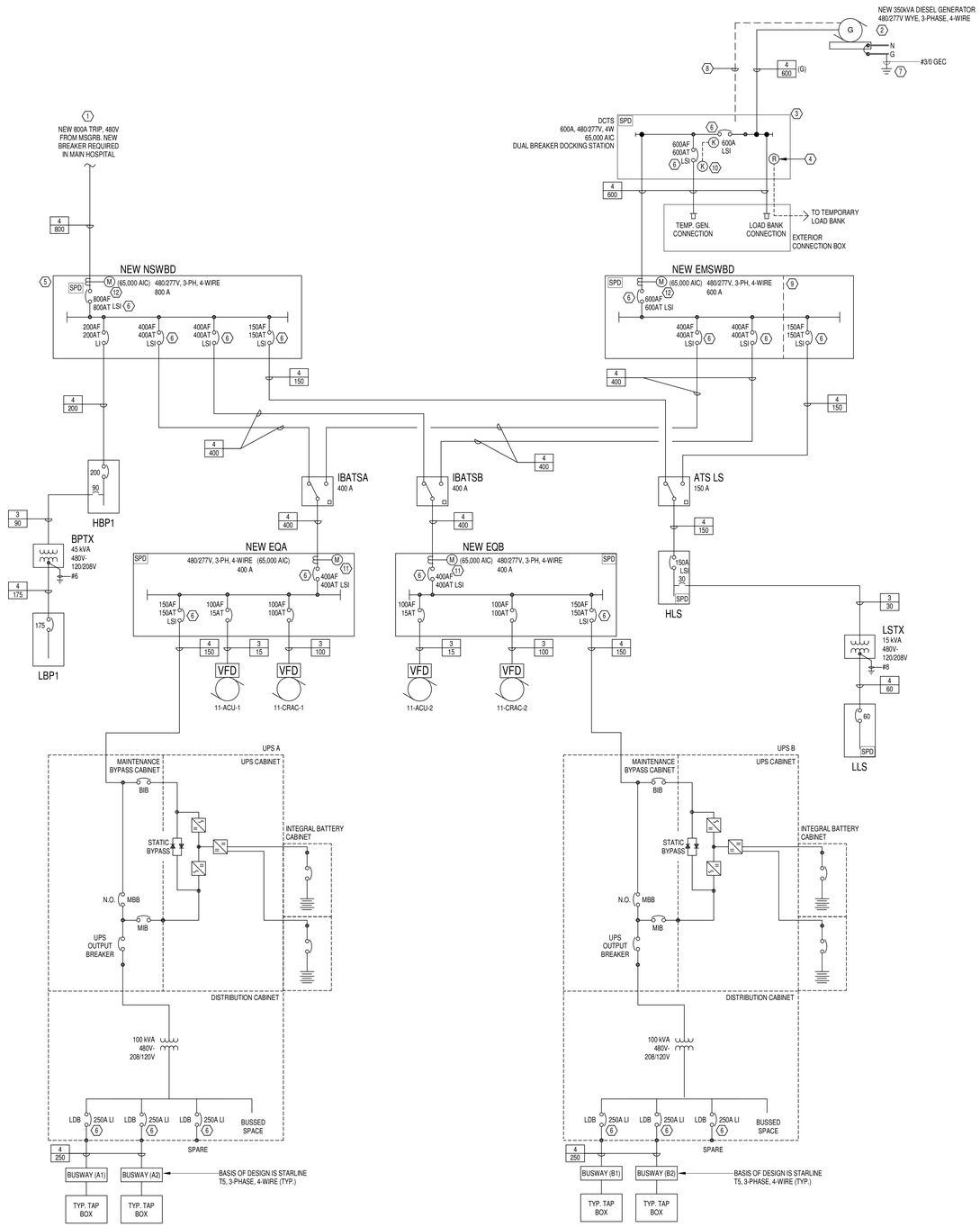

1 ELECTRICAL ONE-LINE DIAGRAM - DATA CENTER
N.T.S.

DRAWING NOTES:

1. ALL AND ANY SHUTDOWNS SHALL BE COORDINATED WITH THE VA COR A MINIMUM OF 4 WEEKS IN ADVANCE.
2. PROVIDE DEDICATED HOME RUN START SIGNALS FROM GENERATOR TO DUAL BREAKER DOCKING STATION THROUGH TO GENERATOR FOR EACH ATS IN DATA CENTER.
3. REFER TO DUCT BANK DETAILS FOR ALL CONDUIT RUNS UNDERGROUND.
4. ALL BREAKERS 200A AND ABOVE SHALL BE PROVIDED WITH FULLY ELECTRONIC ADJUSTABLE TRIP UNITS. BREAKERS SHALL BE PROVIDED WITH A MINIMUM OF LONG TIME AND INSTANTANEOUS ADJUSTABILITY UNLESS OTHERWISE NOTED.
5. BRANCH CIRCUIT BREAKERS SHALL HAVE VISIBLE TRIP WINDOWS.

CODED NOTES:

(1) PROVIDE NEW 800A SQUARE D, MASTERPACT, MTZ FULLY ADJUSTABLE, LSI, POWER CIRCUIT BREAKER IN EXISTING MAIN HOSPITAL SWITCHGEAR LINE UP. MATCH EXISTING AIC RATINGS AND PROVIDE INTEGRATION INTO SWITCHGEAR AND ALL PROGRAMMING AND LABOR REQUIRED TO INTEGRATE INTO EXISTING LINEUP.

(2) NEW 350kVA, 480/277V, 3 PHASE, 4 WIRE DIESEL GENERATOR SET. OPEN UNIT LOCATED INDOORS. REFER TO MECHANICAL PLANS FOR FUEL SYSTEM INFORMATION.

(3) INDOOR RATED GENERATOR DUAL BREAKER DOCKING STATION. PROVIDED WITH EXTERIOR CONNECTION BOX LOCATED PER PLANS. PROVIDE PHASE ROTATION MONITOR AND LOAD DUMP RELAY WITHIN INDOOR PORTION. PROVIDE EXTERIOR CONNECTION BOX WITH ANCILLARY EQUIPMENT FOR TEMPORARY GENERATOR CONNECTION, INCLUDING BUT NOT LIMITED TO, 20A NEMA 5-20R RECEPTACLE, START RELAY CIRCUIT PASS THROUGH, AND LOAD DUMP CONNECTION FOR LOAD BANK. PROVIDE BMS TIE IN AND CONTROL PASS THROUGH FOR ATS START CIRCUITS TO PERMANENT GENERATOR.

(4) LOAD DUMP RELAY FOR CONNECTION TO LOAD BANK. UPON LOSS OF NORMAL POWER LOAD DUMP RELAY SHALL IMMEDIATELY SEND 'DUMP' SIGNAL TO TEMPORARY LOAD BANK TO ALLOW GENERATOR TO PICK UP DATA CENTER LOAD. PROVIDE 1" CONDUIT WITH CONTROL CABLING TO EXTERIOR BOX RECEPTACLE.

(5) DO NOT BOND GROUND AND NEUTRAL BUS. NEUTRAL SHALL BE AN ISOLATED NEUTRAL BUS AS BUILDING IS FED FROM ANOTHER. PROVIDE COPPER GROUNDING ELECTRODE AT SERVICE ENTRANCE.

(6) 100% RATED BREAKER.

(7) PROVIDE NEW COPPER GROUNDING ELECTRODE TRIAD. REFER TO ELECTRICAL DETAILS FOR ADDITIONAL INFORMATION.

(8) PROVIDE 1" CONDUIT FOR START SIGNAL CIRCUIT FROM ATS UNITS TO GENERATOR PER MANUFACTURER GUIDELINES. REFER TO GENERATOR CONTROL DIAGRAM ON SHEET E-501.

(9) PROVIDE LIFE SAFETY BREAKER IN INDEPENDENT AND ISOLATED SECTION PER NEC 700.

(10) PROVIDE KIRK KEY INTERLOCK TO PREVENT TEMPORARY GENERATOR AND PERMANENT GENERATOR FROM BEING ENERGIZED ON THE SAME BUS.

(11) BASIS OF DESIGN METER POWERLOGIC 5563 SERIES. PROVIDE CONNECTION TO BMS SYSTEM.

(12) BASIS OF DESIGN METER POWERLOGIC PM8244. PROVIDE CONNECTION TO BMS SYSTEM.

RACEWAY COLOR SCHEDULE

POWER SYSTEM	COLOR	NOTES
LIFE SAFETY	YELLOW	CONDUIT SHALL BE COLORED FROM FACTORY AND APPLY TO ALL LIFE SAFETY SYSTEMS FOR ALL SIZE CONDUITS.
A SIDE	PURPLE	CONDUIT SHALL BE COLORED FROM FACTORY AND APPLY TO ALL 'A' SIDE SYSTEMS STARTING AT IBATS A DOWN TO BRANCH CIRCUITS.
B SIDE	BLUE	CONDUIT SHALL BE COLORED FROM FACTORY AND APPLY TO ALL 'B' SIDE SYSTEMS STARTING AT IBATS B DOWN TO BRANCH CIRCUITS.
NORMAL	NOT COLORED	CONDUIT SHALL BE COLORED FROM FACTORY AND APPLY TO ALL NORMAL POWER SYSTEMS FOR ALL SIZE CONDUITS.
EM. ONLY	ORANGE	CONDUIT SHALL BE COLORED FROM FACTORY AND APPLY TO ALL GENERATOR ONLY POWER SYSTEMS FOR ALL SIZE CONDUITS.

ATS SCHEDULE

ATS NAME	LOAD TYPE, DELAY (SECONDS)	MAXIMUM DIMENSIONS (WXDXH)	TRANSITION, POLE	NOTES
ATS LS	LIFE SAFETY, <10	38"X32"X92"	OPEN, 4 POLE	BYPASS ISOLATION, BMS TIE IN, 50KAIC
IBATSA	EQUIPMENT UPS A SIDE, 30 SEC.	38"X32"X92"	OPEN, 4 POLE	BYPASS ISOLATION, BMS TIE IN, 50KAIC
IBATSB	EQUIPMENT UPS B SIDE, 60 SEC.	38"X32"X92"	OPEN, 4 POLE	BYPASS ISOLATION, BMS TIE IN, 50KAIC

ATS LOAD STEPS

ATS NAME	LOAD STEP	LOAD DELAY TIME
ATS LS	1	LESS THAN 10 SECONDS
IBATSA	2	GREATER THAN 30 SECONDS
IBATSB	2	GREATER THAN 30 SECONDS

3 WIRE FEEDER SCHEDULE

FEEDER TAG	FEEDER AMPS	FEEDER
3 / 15	15	3#12AWG + 1#12AWG GND IN 3/4" C
3 / 90	90	3#2AWG + 1#6AWG GND IN 1-1/4" C
3 / 100	100	3#1AWG + 1#6AWG GND IN 1-1/2" C

FEEDER TAG KEY

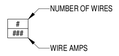

4 WIRE FEEDER SCHEDULE

FEEDER TAG	FEEDER AMPS	FEEDER
4 / 60	60	4#4AWG + 1#10AWG GND IN 1-1/4" C
4 / 175	175	4#2/0AWG + 1#6AWG GND IN 2" C
4 / 200	200	4#3/0AWG + 1#6AWG GND IN 2" C
4 / 250	250	4#250KCMIL + 1#4AWG GND IN 2-1/2" C
4 / 400	400	2 SETS OF (4#3/0AWG + 1#1/0AWG GND IN 2" C)
4 / 600	600	2 SETS OF (4#350KCMIL + 1#1/0AWG GND IN 3" C)
4 / 600 (G)	600	2 SETS OF (4#350KCMIL + 1#2/0SSBJ GND IN 4" C)
4 / 800	800	2 SETS OF (4#600KCMIL + 1#1/0AWG GND IN 4" C)

Revisions | Date

CONSULTANT

Above Group
ENGINEERING. DESIGN. CONSULTING.
www.abovegroupinc.com
COA/CA Lic. No. 31120
305 East Dr., Suite H, Melbourne, Florida 32904
PH: 321.345.9026

ARCHITECT/ENGINEER OF RECORD

RDC◆JPA ARCHITECTURE
524 Fernwood Drive, Altamonte Springs, Florida 32701 | www.rdcjpa.com | 800.362.1523

STAMP

Office of Construction and Facilities Management

VA U.S. Department of Veterans Affairs

Drawing Title	ELECTRICAL DIAGRAMS
Phase	BID DOCUMENTS
Project Title	GAINESVILLE DATA CENTER
Project Number	573-21-106
Building Number	
Approved:	STATION CHIEF - EDWIN BURNETT
	FULLY SPRINKLERED
Location	GAINESVILLE, FL
Issue Date	04.20.2026
Checked	BMS
Drawn	IMW
Drawing Number	E-601

Autodesk Docs://Florida, Gainesville VA122085_VA Gainesville_Data Ctr_P25_MEP1.rvt
4/13/2026 1:20:08 PM

VA FORM 08 - 6231

Branch Panel: HLS

Location: ELEC 104	**Volts:** 480/277 Wye	**A.I.C. Rating:** 65,000	
Supply From: ATS LS	**Phases:** 3	**Mains Type:** MCB	
Mounting: Surface	**Wires:** 4	**Mains Rating:** 150 A	
Enclosure: Type 1			

Notes:

CKT	Circuit Description	Trip	Poles	A		B		C		Poles	Trip	Circuit Description	CKT
1	LIGHTING - GENERATOR / BOH	20 A	1	160 VA	349 VA					1	20 A	LIGHTING - PACKING STAGING / STORAGE	2
3	LIGHTING - ENTRANCE 106	20 A	1			119 VA	246 VA			1	20 A	LIGHTING - DATA CENTER 100	4
5	LIGHTING - EXTERIOR	20 A	1					120 VA	0 VA	1	20 A	SPARE	6
7	SPARE	20 A	1	0 VA	0 VA					1	20 A	SPARE	8
9	SPARE	20 A	1			0 VA	0 VA			1	20 A	SPARE	10
11	SPARE	20 A	1					0 VA	0 VA	1	20 A	SPARE	12
13	SPARE	20 A	1	0 VA	0 VA					1	20 A	SPARE	14
15	SPARE	20 A	1			0 VA	0 VA			1	20 A	SPARE	16
17	SPARE	20 A	1					0 VA	0 VA	1	20 A	SPARE	18
19	SPARE	20 A	1	0 VA	0 VA					1	20 A	SPARE	20
21	SPACE	--	1			--	--			1	--	SPACE	22
23	SPACE	--	1					--	--	1	--	SPACE	24
25	SPACE	--	1	--	--					1	--	SPACE	26
27	SPACE	--	1			--	--			1	--	SPACE	28
29	SPACE	--	1					--	--	1	--	SPACE	30
31	SPACE	--	1	--	--					1	--	SPACE	32
33	SPACE	--	1			--	--			1	--	SPACE	34
35	SPACE	--	1					--	--	1	--	SPACE	36
37	SPACE	--	1	--	2000...								38
39	SPACE	--	1			--	2000...			3	30 A	PANEL LLS VIA LSTX	40
41	SPACE	--	1					--	1000...				42
		Total Load:		2510 VA		2365 VA		1120 VA					
		Total Amps:		10 A		9 A		4 A					

Legend:

Load Classification	Connected Load	Demand Factor	Estimated Demand	Panel Totals	
Lighting	994 VA	100.00%	994 VA		
Other	5000 VA	100.00%	5000 VA	**Total Conn. Load:**	5994 VA
				Total Est. Demand:	5994 VA
				Total Conn. Current:	7 A
				Total Est. Demand Current:	7 A

Notes:

Branch Panel: LLS

Location: ELEC 104	**Volts:** 120/208 Wye	**A.I.C. Rating:** 42,000	
Supply From: LSTX	**Phases:** 3	**Mains Type:** MCB	
Mounting: Surface	**Wires:** 4	**Mains Rating:** 60 A	
Enclosure: Type 1			

Notes:

CKT	Circuit Description	Trip	Poles	A		B		C		Poles	Trip	Circuit Description	CKT
1	FIRE ALARM CONTROL PANEL	20 A	1	500 VA	500 VA					1	20 A	BATTERY CHARGER	2
3	JACKET HEATER	20 A	1			500 VA	500 VA			1	20 A	GENERATOR CONTROLLER	4
5	JBOX BLAST LOUVER	20 A	1					500 VA	500 VA	1	20 A	JBOX BLAST LOUVER	6
7	LIGHTING CONTROL PANEL	20 A	1	500 VA	500 VA					1	20 A	BUILDING CONTROL PANEL	8
9	TRUCK UNLOADING SYSTEM	20 A	1			500 VA	500 VA			1	20 A	FACP	10
11	SPARE	20 A	1					0 VA	0 VA	1	20 A	SPARE	12
13	SPARE	20 A	1	0 VA	0 VA					1	20 A	SPARE	14
15	SPARE	20 A	1			0 VA	0 VA			1	20 A	SPARE	16
17	SPARE	20 A	1					0 VA	0 VA	1	20 A	SPARE	18
19	SPARE	20 A	1	0 VA	0 VA					1	20 A	SPARE	20
21	SPACE	--	1			--	--			1	--	SPACE	22
23	SPACE	--	1					--	--	1	--	SPACE	24
25	SPACE	--	1	--	--					1	--	SPACE	26
27	SPACE	--	1			--	--			1	--	SPACE	28
29	SPACE	--	1					--	--	1	--	SPACE	30
31	SPACE	--	1	--	--					1	--	SPACE	32
33	SPACE	--	1			--	--			1	--	SPACE	34
35	SPACE	--	1					--	--	1	--	SPACE	36
37	SPACE	--	1	--	--					1	--	SPACE	38
39	SPACE	--	1			--	--			1	--	SPACE	40
41	SPACE	--	1					--	--	1	--	SPACE	42
		Total Load:		2000 VA		2000 VA		1000 VA					
		Total Amps:		18 A		18 A		8 A					

Legend:

Load Classification	Connected Load	Demand Factor	Estimated Demand	Panel Totals	
Other	5000 VA	100.00%	5000 VA		
				Total Conn. Load:	5000 VA
				Total Est. Demand:	5000 VA
				Total Conn. Current:	14 A
				Total Est. Demand Current:	14 A

Notes:

Switchboard: NSWBD

Location: ELEC 104	**Volts:** 480/277 Wye	**A.I.C. Rating:** 65,000
Supply From: MSGRB	**Phases:** 3	**Mains Type:** MCB
Mounting: Surface	**Wires:** 4	**Mains Rating:** 800 A
Enclosure: NEMA 1		**MCB Rating:** 800 A
		Neutral Rating: 100.00%

Notes:
PROVIDED WITH 800AF LSI BREAKER, SPD, AND METER.

CKT	Circuit Description	# of Poles	Trip Rating	Load	Remarks
1	IBATSA (NORMAL)	3	400 A	136.0 kVA	
2	IBATSB (NORMAL)	3	400 A	136.0 kVA	
3	ATS LS (NORMAL)	3	150 A	6.0 kVA	
4	PANEL HBP1	3	200 A	57.6 kVA	
5	SPARE	3	400 A	0.0 kVA	
6	SPARE	3	150 A	0.0 kVA	
7	SPARE	3	150 A	0.0 kVA	
8	SPACE	3	--	--	
9	SPACE	3	--	--	
10	SPACE	3	--	--	
				335599 VA	
				404 A	

Load Classification	Connected Load	Demand Factor	Estimated Demand	Panel Totals	
Lighting	2477 VA	100.00%	2477 VA		
Other	316922 VA	100.00%	316922 VA	**Total Conn. Load:**	335599 VA
Receptacle	16200 VA	80.86%	13100 VA	**Total Est. Demand:**	332499 VA
				Total Conn. Current:	404 A
				Total Est. Demand...	400 A

Notes:

Switchboard: EMSWBD

Location: ELEC 104	**Volts:** 480/277 Wye	**A.I.C. Rating:** 65,000
Supply From: NEW 350kVA...	**Phases:** 3	**Mains Type:** MCB
Mounting: Surface	**Wires:** 4	**Mains Rating:** 600 A
Enclosure: NEMA 1		**MCB Rating:** 600 A
		Neutral Rating: 100.00%

Notes:

CKT	Circuit Description	# of Poles	Trip Rating	Load	Remarks
1	IBATSA (EMERGENCY)	3	400 A	136.0 kVA	
2	IBATSB (EMERGENCY)	3	400 A	136.0 kVA	
3	ATS LS (EMERGENCY)	3	150 A	6.0 kVA	
4	SPARE	3	400 A	0.0 kVA	
5	SPARE	3	150 A	0.0 kVA	
6	SPARE	3	150 A	0.0 kVA	
7	SPACE	3	--	--	
8	SPACE	3	--	--	
9	SPACE	3	--	--	
10	SPACE	3	--	--	
				277967 VA	
				334 A	

Load Classification	Connected Load	Demand Factor	Estimated Demand	Panel Totals	
Lighting	994 VA	100.00%	994 VA		
Other	276973 VA	100.00%	276973 VA	**Total Conn. Load:**	277967 VA
				Total Est. Demand:	277967 VA
				Total Conn. Current:	334 A
				Total Est. Demand...	334 A

Notes:

LIGHTING FIXTURE SCHEDULE

TYPE	DESCRIPTION	MANUFACTURER	MODEL	VOLTAGE	VA	LAMP TYPE	FIXTURE LUMENS	FIXTURE COLOR TEMP (K)	DRIVER/BALLAST	COMMENTS
A2	2'x2' LED FIXTURE	METALUX	BAA-22EN-LD2-34-UNV-CD1-U	277 V	29 VA	LED	3471	3500K	NA	-
C	4' SURFACE MOUNTED LED STRIP FIXTURE	METALUX	BAA-4SNX-45SL-LW-UNV-L835-CD1-U	277 V	30 VA	LED	4292	3500K	NA	-
CE	4' SURFACE MOUNTED LED STRIP FIXTURE	METALUX	BAA-4SNX-45SL-LW-UNV-L835-CD1-EL14WSD-U	277 V	30 VA	LED	4292	3500K	NA	-
G	4' WET LOCATION LED STRIP FIXTURE	METALUX	BAA-4APVTLD-SL3C3	277 V	32 VA	LED	4452	3500K	NA	-
GE	4' WET LOCATION LED STRIP FIXTURE	METALUX	BAA-4APVTLD-SL3C3-EL10W	277 V	32 VA	LED	4452	3500K	NA	-
W	DECORATIVE WALL MOUNT	LUMARK AP	WPMLED07B	277 V	30 VA	LED	3500	4000K	NA	-
X	LED EXIT SIGN, CEILING MOUNTED, RED LETTERS, CLEAR BACKGROUND AND SINGLE OR DOUBLE FACE	SURE-LITES	SCX	277 V	2 VA	LED	-	-	NA	-

NOTES: (APPLICABLE TO LUMINAIRE SCHEDULE ONLY)

1. CATALOG NUMBERS FOR LUMINAIRES INDICATE THE TYPE AND QUALITY OF THE LUMINAIRE TO BE PROVIDED BY THE CONTRACTOR AND ARE GENERAL IN NATURE. THE CATALOG NUMBERS ARE NOT INTENDED TO INDICATE AN ACTUAL ORDER MODEL NUMBER. IT IS THE CONTRACTOR'S RESPONSIBILITY TO PROVIDE LUMINAIRES WITH THE TYPE OF LED, DRIVER, LENS OR DIFFUSER, AND CONSTRUCTION FEATURES AS INDICATED IN THE SPECIFICATIONS.
2. PROVIDE EXIT SIGNS WITH SINGLE FACE OR DOUBLE FACE AND WITH OR WITHOUT CHEVRONS AS INDICATED ON THE DRAWINGS. PROVIDE RED OR GREEN LETTERING AS REQUIRED BY AHJ.
3. EMERGENCY FIXTURES AND BATTERY PACKS ARE TO BE CONNECTED TO CONSTANT HOT LEG (UN-SWITCHED) OF CIRCUIT INDICATED.
4. ALL MOUNTING HEIGHTS SHALL BE AS INDICATED ON THE DRAWINGS, LIGHTING FIXTURE SCHEDULE, OR AS DIRECTED BY ARCHITECT OR ENGINEER. MOUNTING HEIGHTS OF WALL MOUNTED LUMINAIRES SHALL BE MEASURED FROM THE FINISHED FLOOR TO THE CENTERLINE OF THE LUMINAIRE. MOUNTING HEIGHTS OF CEILING SUSPENDED LUMINAIRES SHALL BE MEASURED FROM THE FINISHED FLOOR TO THE BOTTOM OF THE LUMINAIRE.

EQUIPMENT SCHEDULE

EQUIPMENT NAME	IDENTIFICATION	HP	FLA	MCA	VOLT / PH / LOAD (VA)	MOCP	CB AMPS	PANEL	CKT #	FEEDER SIZE	CONDUIT	MOTOR STARTING	DISC MEANS	COMMENTS
11-AC-1	SPLIT AIR HANDLING UNIT	-	1 A	-	480 V/3-480 VA	15 A	15 A	HBP1	8,10,12	(3) #12 AWG + (1) #12 AWG GND	3/4"	NA	DS-11-AC-1	-
11-ACU-1	AIR COOLED CONDENSER	-	-	11.9 A	480 V/3-9478 VA	15 A	15 A	EQA	3	(3) #12 AWG + (1) #12 AWG GND	3/4"	NA	FACTORY INSTALLED	-
11-ACU-2	AIR COOLED CONDENSER	-	-	11.9 A	480 V/3-9478 VA	15 A	15 A	EQB	3	(3) #12 AWG + (1) #12 AWG GND	3/4"	NA	FACTORY INSTALLED	-
11-ACU-3	CONDENSING UNIT	-	-	13 A	480 V/3-9145 VA	20 A	20 A	HBP1	9,11,13	(2) #10 AWG + (1) #12 AWG GND	3/4"	NA	FACTORY INSTALLED	-
11-CRAC-1	COMPUTER ROOM AIR CONDITIONER	-	-	92.2 A	480 V/3-66509 VA	100 A	100 A	EQA	2	(3) #1 AWG + (1) #8 AWG GND	1-1/2"	NA	DS-11-CRAC-1	-
11-CRAC-2	COMPUTER ROOM AIR CONDITIONER	-	-	92.2 A	480 V/3-66509 VA	100 A	100 A	EQB	2	(3) #1 AWG + (1) #8 AWG GND	1-1/2"	NA	DS-11-CRAC-2	-
11-EF-01	EXHAUST FAN	-	-	0.9 A	208 V/1-187 VA	15 A	15 A	LBP1	30,32	(2) #12 AWG + (1) #12 AWG GND	3/4"	NA	FACTORY INSTALLED	-
11-ODU-01	DUCTLESS SPLIT AIR CONDITIONER	-	-	12.4 A	208 V/1-2569 VA	15 A	15 A	LBP1	22,24	(2) #12 AWG + (1) #12 AWG GND	3/4"	NA	DS-11-ODU-01	-
11-ODU-02	DUCTLESS SPLIT AIR CONDITIONER	-	-	12.4 A	208 V/1-2569 VA	15 A	15 A	LBP1	26,28	(2) #12 AWG + (1) #12 AWG GND	3/4"	NA	DS-11-ODU-02	-
11-VAV-1	SINGLE DUCT AIR TERMINAL UNIT	-	-	-	208 V/1-1500 VA	20 A	20 A	LBP1	17,19	(2) #12 AWG + (1) #12 AWG GND	3/4"	NA	FACTORY INSTALLED	-
11-VAV-2	SINGLE DUCT AIR TERMINAL UNIT	-	-	-	208 V/1-1500 VA	20 A	20 A	LBP1	21,23	(2) #12 AWG + (1) #12 AWG GND	3/4"	NA	FACTORY INSTALLED	-
11-VAV-3	SINGLE DUCT AIR TERMINAL UNIT	-	-	-	208 V/1-1500 VA	20 A	20 A	LBP1	25,27	(2) #12 AWG + (1) #12 AWG GND	3/4"	NA	FACTORY INSTALLED	-
11-VAV-4	SINGLE DUCT AIR TERMINAL UNIT	-	-	-	208 V/1-1500 VA	20 A	20 A	LBP1	29,31	(2) #12 AWG + (1) #12 AWG GND	3/4"	NA	FACTORY INSTALLED	-
11-VAV-5	SINGLE DUCT AIR TERMINAL UNIT	-	-	-	208 V/1-1500 VA	20 A	20 A	LBP1	33,35	(2) #12 AWG + (1) #12 AWG GND	3/4"	NA	FACTORY INSTALLED	-
11-VAV-6	SINGLE DUCT AIR TERMINAL UNIT	-	-	-	208 V/1-1500 VA	20 A	20 A	LBP1	37,39	(2) #12 AWG + (1) #12 AWG GND	3/4"	NA	FACTORY INSTALLED	-
EWH-1	INSTANTANEOUS WATER HEATER	-	19.2 A	-	480 V/3-16000 VA	25 A	25 A	HBP1	2,4,6	(3) #10 AWG + (1) #10 AWG GND	3/4"	NA	DS-EWH-1	-

DISCONNECT SCHEDULE

DISC NAME	TYPE OF EQUIPMENT	VOLTAGE RATING	ENCLOSURE RATING	DISC. AMP/POLE	FUSE/BREAKER SIZE	DISCONNECT NOTES
DS-11-AC-1	NON-FUSED DISCONNECT	480V	NEMA 1	20A/3P	N/A	COORDINATE FINAL LOCATION FOR MOUNTING, FINAL WIRE QUANITY AND WIRING REQUIREMENTS WITH MECHANICAL CONTRACTOR
DS-11-CRAC-1	FUSED DISCONNECT	480V	NEMA 1	100A/3P	100 A	COORDINATE FINAL LOCATION FOR MOUNTING, FINAL WIRE QUANITY AND WIRING REQUIREMENTS WITH MECHANICAL CONTRACTOR
DS-11-CRAC-2	FUSED DISCONNECT	480V	NEMA 1	100A/3P	100 A	COORDINATE FINAL LOCATION FOR MOUNTING, FINAL WIRE QUANITY AND WIRING REQUIREMENTS WITH MECHANICAL CONTRACTOR
DS-11-ODU-01	NON-FUSED DISCONNECT	208V	NEMA 3R	20A/3P	N/A	COORDINATE FINAL LOCATION FOR MOUNTING, FINAL WIRE QUANITY AND WIRING REQUIREMENTS WITH MECHANICAL CONTRACTOR. PROVIDE 3#12AWG + 1#12AWG GRD. IN 3/4"C. FROM OUTDOOR TO INDOOR UNIT
DS-11-ODU-02	NON-FUSED DISCONNECT	208V	NEMA 3R	20A/3P	N/A	COORDINATE FINAL LOCATION FOR MOUNTING, FINAL WIRE QUANITY AND WIRING REQUIREMENTS WITH MECHANICAL CONTRACTOR. PROVIDE 3#12AWG + 1#12AWG GRD. IN 3/4"C. FROM OUTDOOR TO INDOOR UNIT
DS-EWH-1	NON-FUSED DISCONNECT	480V	NEMA 1	30A/3P	N/A	COORDINATE FINAL LOCATION FOR MOUNTING, FINAL WIRE QUANITY AND WIRING REQUIREMENTS WITH MECHANICAL CONTRACTOR

Branch Panel: HBP1

Location: ELEC 104
Supply From: NSWBD
Mounting: Surface
Enclosure: Type 1

Volts: 480/277 Wye
Phases: 3
Wires: 4

A.I.C. Rating: 65,000
Mains Type: MCB
Mains Rating: 200 A

Notes:

CKT	Circuit Description	Trip	Poles	A		B		C		Poles	Trip	Circuit Description	CKT
1	LIGHTING - GENERATOR / BOH	20 A	1	242 VA	5333...								2
3	LIGHTING - PACKING STAGING / STORAGE	20 A	1			342 VA	5333...			3	25 A	EWH-1	4
5	LIGHTING - DATA CENTER 100	20 A	1					209 VA	5333...				6
7	LIGHTING - EXTERIOR	20 A	1	690 VA	160 VA								8
9						3048...	160 VA			3	15 A	11-AC-1	10
11	11-ACU-3	20 A	3					3048...	160 VA				12
13				3048...	0 VA					1	20 A	SPARE	14
15	SPARE	20 A	1			0 VA	0 VA			1	20 A	SPARE	16
17	SPARE	20 A	1					0 VA	0 VA	1	20 A	SPARE	18
19	SPARE	20 A	1	0 VA	0 VA					1	20 A	SPARE	20
21	SPARE	20 A	1			0 VA	0 VA			1	20 A	SPARE	22
23	SPARE	20 A	1					0 VA	0 VA	1	20 A	SPARE	24
25	SPARE	20 A	1	0 VA	0 VA					1	20 A	SPARE	26
27	SPARE	20 A	1			0 VA	0 VA			1	20 A	SPARE	28
29	SPARE	20 A	1					0 VA	0 VA	1	20 A	SPARE	30
31	SPACE	--	1	--	--					1	--	SPACE	32
33	SPACE	--	1			--	--			1	--	SPACE	34
35	SPACE	--	1					--	--	1	--	SPACE	36
37	SPACE	--	1	--	1048...								38
39	SPACE	--	1			--	1096...			3	70 A	PANEL LBP1 VIA BPTX	40
41	SPACE	--	1					--	9071...				42
			Total Load:	19958 VA		19852 VA		17822 VA					
			Total Amps:	73 A		73 A		64 A					

Legend:

Load Classification	Connected Load	Demand Factor	Estimated Demand	Panel Totals	
Lighting	1483 VA	100.00%	1483 VA		
Other	39950 VA	100.00%	39950 VA		
				Total Conn. Load:	57633 VA
				Total Est. Demand:	54533 VA
				Total Conn. Current:	69 A
				Total Est. Demand Current:	66 A

Notes:

Branch Panel: LBP1

Location: ELEC 104
Supply From: BPTX
Mounting: Surface
Enclosure: Type 1

Volts: 120/208 Wye
Phases: 3
Wires: 4

A.I.C. Rating: 42,000
Mains Type: MCB
Mains Rating: 150 A

Notes:

CKT	Circuit Description	Trip	Poles	A		B		C		Poles	Trip	Circuit Description	CKT
1	RECEPT - EXTERIOR	20 A	1	400 VA	1000...					1	20 A	RECEPT - GENERATOR ROOM 120	2
3	RECEPT - DATA CENTER ROOM 100	20 A	1			1000...	800 VA			1	20 A	RECEPT - HAC 103 / ELEC 104	4
5	RECEPT - MECHANICAL 102	20 A	1					800 VA	800 VA	1	20 A	RECEPT - PACKING STAGING 105	6
7	RECEPT - PACKING STAGING 105	20 A	1	800 VA	1200...					1	20 A	RECEPT - STORAGE 107	8
9						1000...	1000...						10
11	RECEPT - ENTRANCE 106 TELE RACK	20 A	3					1000...	1000...	3	20 A	RECEPT - ENTRANCE 106 TELE RACK	12
13				1000...	1000...								14
15	RECEPT - ENTRANCE 106 TELE RECEPT.	20 A	1			800 VA	800 VA			1	20 A	RECEPT - ENTRANCE 106 TELE RECEPT.	16
17	11-VAV-1	20 A	2					750 VA	1000...	1	20 A	RECEPT - DATA CENTER ROOM 100	18
19				750 VA	800 VA					1	20 A	RECEPT - EXTERIOR	20
21	11-VAV-2	20 A	2			750 VA	1284...			2	15 A	11-ODU-01	22
23								750 VA	1284...				24
25	11-VAV-3	20 A	2	750 VA	1284...					2	15 A	11-ODU-02	26
27						750 VA	1284...						28
29	11-VAV-4	20 A	2					750 VA	187 VA	2	15 A	11-EF-01	30
31				750 VA	0 VA								32
33	11-VAV-5	20 A	2			750 VA	0 VA			1	20 A	SPARE	34
35								750 VA	0 VA	1	20 A	SPARE	36
37	11-VAV-6	20 A	2	750 VA	0 VA					1	20 A	SPARE	38
39						750 VA	0 VA			1	20 A	SPARE	40
41	SPARE	20 A	1					0 VA	0 VA	1	20 A	SPARE	42
			Total Load:	10484 VA		10969 VA		9071 VA					
			Total Amps:	89 A		93 A		76 A					

Legend:

Load Classification	Connected Load	Demand Factor	Estimated Demand	Panel Totals	
Other	14325 VA	100.00%	14325 VA		
				Total Conn. Load:	30525 VA
				Total Est. Demand:	27425 VA
				Total Conn. Current:	85 A
				Total Est. Demand Current:	76 A

Notes:

Panelboard: EQA

Location: DATA CENTER ROOM 100
Supply From: IBATSA
Mounting: Surface
Enclosure: NEMA 1

Volts: 480/277 Wye
Phases: 3
Wires: 4

A.I.C. Rating: 65,000
Mains Type: MCB
Mains Rating: 400 A
MCB Rating: 400 A
Neutral Rating: 100.00%

Notes:

CKT	Circuit Description	# of Poles	Trip Rating	Load	Remarks
1	UPS A	3	150 A	60.0 kVA	SEE NOTE 1.
2	11-CRAC-1	3	100 A	66.5 kVA	
3	11-ACU-1	3	15 A	9.5 kVA	
4	SPARE	3	100 A	0.0 kVA	
5	SPARE	3	15 A	0.0 kVA	
6	SPARE	3	20 A	0.0 kVA	
7	SPACE	3	--	--	SEE NOTE 2.
8	SPACE	3	--	--	SEE NOTE 2.
9	SPACE	3	--	--	SEE NOTE 2.
10	SPACE	3	--	--	SEE NOTE 2.
				135986 VA	
				164 A	

Load Classification	Connected Load	Demand Factor	Estimated Demand	Panel Totals	
Other	135986 VA	100.00%	135986 VA		
				Total Conn. Load:	135986 VA
				Total Est. Demand:	135986 VA
				Total Conn. Current:	164 A
				Total Est. Demand...	164 A

Notes:
1. APPROXIMATELY HALF OF LOAD AND CHARGING ACCOUNTED FOR PER NORMAL OPERATION.
2. SPACE SHALL BE ABLE TO ACCOMMODATE A 150AF CIRCUIT BREAKER AT A MINIMUM.

Panelboard: EQB

Location: DATA CENTER ROOM 100
Supply From: IBATSB
Mounting: Surface
Enclosure: NEMA 1

Volts: 480/277 Wye
Phases: 3
Wires: 4

A.I.C. Rating: 65,000
Mains Type: MCB
Mains Rating: 400 A
MCB Rating: 400 A
Neutral Rating: 100.00%

Notes:

CKT	Circuit Description	# of Poles	Trip Rating	Load	Remarks
1	UPS B	3	150 A	60.0 kVA	SEE NOTE 1.
2	11-CRAC-2	3	100 A	66.5 kVA	
3	11-ACU-2	3	15 A	9.5 kVA	
4	SPARE	3	100 A	0.0 kVA	
5	SPARE	3	15 A	0.0 kVA	
6	SPARE	3	20 A	0.0 kVA	
7	SPACE	1	--	--	SEE NOTE 2.
8	SPACE	1	--	--	SEE NOTE 2.
9	SPACE	1	--	--	SEE NOTE 2.
10	SPACE	1	--	--	SEE NOTE 2.
				135986 VA	
				164 A	

Load Classification	Connected Load	Demand Factor	Estimated Demand	Panel Totals	
Other	135986 VA	100.00%	135986 VA		
				Total Conn. Load:	135986 VA
				Total Est. Demand:	135986 VA
				Total Conn. Current:	164 A
				Total Est. Demand...	164 A

Notes:
1. APPROXIMATELY HALF OF LOAD AND CHARGING ACCOUNTED FOR PER NORMAL OPERATION.
2. SPACE SHALL BE ABLE TO ACCOMMODATE A 150AF CIRCUIT BREAKER AT A MINIMUM.

Autodesk Docs://Florida_Gainesville VA 122085_ VA Gainesville_Data Ctr_P25_ MEPT.rvt
4/13/2026 1:20:12 PM

Revisions	Date

VA FORM 08 - 6231

CONSULTANT

Above Group
ENGINEERING. DESIGN. CONSULTING.
www.abovegroupinc.com
COA/CA Lic. No. 31120
305 East Dr., Suite H,
Melbourne, Florida 32904
PH: 321.345.9026

ARCHITECT/ENGINEER OF RECORD

RDC◆JPA
ARCHITECTURE
524 Fernwood Drive, Altamonte Springs, Florida 32701 | www.rdcjpa.com | 800.362.1523

STAMP

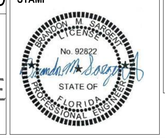

Office of Construction and Facilities Management

VA U.S. Department of Veterans Affairs

Drawing Title: ELECTRICAL SCHEDULES
Phase: BID DOCUMENTS
Project Title: GAINESVILLE DATA CENTER
Project Number: 573-21-106
Building Number:

Approved: STATION CHIEF - EDWIN BURNETT
FULLY SPRINKLERED
Location: GAINESVILLE, FL
Issue Date: 04.20.2026
Checked: BMS
Drawn: IMW
Drawing Number: E-802

NOTE:
THIS PROJECT TO BE PLOTTED IN COLOR TO ACCURATELY DEPICT LINE TYPES.

CONDUIT: CAT6A CABLE FILL CHART

CONDUIT SIZE (ID)	MAX NUMBER OF CAT6A CABLES PER CONDUIT	CONDUIT FILL
1.10"	3	34.7%
1.25"	6	39.7%
1.50"	8	38.8%
2.00"	13	38.0%
2.50"	19	38.9%
3.00"	30	39.7%
4.00"	52	39.9%

BASIS OF DESIGN CAT6A CABLE NOMINAL OUTER DIAMETER IS 0.35". CONTRACTOR SHALL BE RESPONSIBLE FOR ADJUSTING CABLE FILL FOR CABLES WITH LARGER OR SMALLER NOMINAL OUTER DIAMETER.

CONDUIT: 24-STRAND OS2 FIBER OPTIC CABLE FILL CHART

CONDUIT SIZE (ID)	MAX NUMBER OF FIBER OPTIC CABLES PER CONDUIT	CONDUIT FILL
1.00"	1	53%
1.25"	3	40%
1.50"	4	40%
2.00"	7	40%
2.50"	10	40%
3.00"	15	40%
4.00"	27	40%

BASIS OF DESIGN OS2 24-STRAND FIBER OPTIC CABLE NOMINAL OUTER DIAMETER IS 0.46". CONTRACTOR SHALL BE RESPONSIBLE FOR ADJUSTING CABLE FILL FOR CABLES WITH LARGER OR SMALLER NOMINAL OUTER DIAMETER.

CONDUIT: 12-STRAND OS2 FIBER OPTIC CABLE FILL CHART

CONDUIT SIZE (ID)	MAX NUMBER OF FIBER OPTIC CABLES PER CONDUIT	CONDUIT FILL
1.00"	1	53%
1.25"	2	31%
1.50"	3	40%
2.00"	6	40%
2.50"	8	40%
3.00"	13	40%
4.00"	24	40%

BASIS OF DESIGN OS2 12-STRAND FIBER OPTIC CABLE NOMINAL OUTER DIAMETER IS 0.49". CONTRACTOR SHALL BE RESPONSIBLE FOR ADJUSTING CABLE FILL FOR CABLES WITH LARGER OR SMALLER NOMINAL OUTER DIAMETER.

CONDUIT: 24-STRAND OM4 FIBER OPTIC CABLE FILL CHART

CONDUIT SIZE (ID)	MAX NUMBER OF FIBER OPTIC CABLES PER CONDUIT	CONDUIT FILL
1.00"	3	40%
1.25"	5	40%
1.50"	8	40%
2.00"	13	40%
2.50"	19	40%
3.00"	30	40%
4.00"	52	40%

BASIS OF DESIGN OM4 24-STRAND FIBER OPTIC CABLE NOMINAL OUTER DIAMETER IS 0.33". CONTRACTOR SHALL BE RESPONSIBLE FOR ADJUSTING CABLE FILL FOR CABLES WITH LARGER OR SMALLER NOMINAL OUTER DIAMETER.

CAT6A CABLE TRAY FILL CHART

CAT. NO.	DEPTH (IN)	WIDTH (IN)	CAT6A 4-PAIR PLENUM RATED (0.35 IN.)
CF105/300	4	12	248
CF105/450	4	18	373
CF105/500	4	20	414
CF105/600	4	24	497
CF150/150	6	6	186
CF150/200	6	8	238
CF150/300	6	12	357
CF150/450	6	18	536
CF150/500	6	20	596
CF150/600	6	24	715
CF150/900	6	36	1078

CABLE TRAY FILL CALCULATIONS:
BASIS OF DESIGN IS CABLOFIL - WHITE POWDERCOAT MODEL NUMBERS IN FILL CHART.

TELECOMMUNICATIONS ABBREVIATIONS

A/C UNIT	AIR CONDITIONING UNIT
A/E	ARCHITECT/ENGINEER
AAP	ALARM ANNUNCIATOR PANEL
AC	ALTERNATING CURRENT OR ARMORED CABLE
ACC	ACCESSIBLE
ADDL	ADDITIONAL
ADJ	ADJACENT, ADJOINING
ADO	AUTOMATIC DOOR OPENER
AFC	ABOVE FINISHED COUNTER
AFF	ABOVE FINISHED FLOOR
AFG	ABOVE FINISHED GRADE
AHJ	AUTHORITY HAVING JURISDICTION
ALT	ALTERNATE
AMB OR A	AMBIENT
ARCH	ARCHITECT
ATS	AUTOMATIC TRANSFER SWITCH
AUTO	AUTOMATIC
AV	AUDIO VISUAL
BAT	BATTERY
BBC	BONDING BACKBONE CONDUCTOR
BC	BARE COPPER
BD	BOARD
BFF	BELOW FINISH FLOOR
BLDG	BUILDING
BPIP	BOILER PLANT INSTRUMENTATION PANEL
BYP	BY PASS
C	CONDUIT
CAB	CABINET
CALC	CALCULATE
CAP	CAPACITY
CAT	CATALOG
CATV	COMMUNITY ANTENNA TELEVISION
CCR	CONTROL CONTACTOR
CCTV	CLOSED CIRCUIT TELEVISION
CD	CONSTRUICTION DOCUMENTS
CF	CONTRACTOR FURNISHED
CF/CI	CONTRACTOR FURNISHED/CONTRACTOR INSTALLED
CF/OI	CONTRACTOR FURNISHED/OWNER INSTALLED
CFE	CONTRACTOR FURNISHED EQUIPMENT
CLG	CEILING
CMU	CONCRETE MASONRY UNIT
COAX	COAX CABLE
COMM	COMMUNICATION
COMPT	COMPARTMENT
CONC	CONCRETE
CONT	CONTINUE
CONTR	CONTRACTOR
COORD	COORDINATE
CTV	CABLE TELEVISION
CU	COPPER
CU FT	CUBIC FEET
CUR	CURRENT
DB	DECIBEL OR DIRECT BURIAL
DC	DIRECT CURRENT
DEG C	DEGREES CELSIUS
DEG F	DEGREES FAHRENHEIT
DEMO	DEMOLITION
DIAG	DIAGRAM
DISTR	DISTRIBUTION
DN	DOWN
DRSW	DOOR SWITCH
DWG	DRAWING
EC	EMPTY CONDUIT
EG	EQUIPMENT GROUND
EL	ELEVATION
ELEC	ELECTRIC OR ELECTRICAL
ELEV	ELEVATOR
EMER	EMERGENCY
EMI	ELECTROMAGNETIC INTERFERENCE
EMT	ELECTRICAL METALLIC TUBING
ENCL	ENCLOSURE
EPO	EMERGENCY POWER OFF
ESMT	EASEMENT
EXIST	EXISTING
FLEX	FLEXIBLE METALLIC CONDUIT
FOUTT	TELEPHONE FLOOR OUTLET
FP	FIRE PROTECTION
FT	FEET OR FOOT
G OR GND	GROUND OR GENERATOR
GEN	GENERATOR
GTB	GROUND TERMINAL BOX
HT	HEIGHT
HZ	HERTZ
IMC	INTERMEDIATE METAL CONDUIT
IR	INFRARED
J-BOX	JUNCTION BOX
LF	LINEAR FEET (FOOT)
LTNG	LIGHTNING
LV	LOW VOLTAGE
MATV	MASTER ANTENNA TELEVISION SYSTEM
MAX	MAXIMUM
MECH	MECHANICAL
MH	MANHOLE
MIN	MINIMUM
MT	MOUNT
MTD	MOUNTED
MTG	MOUNTING
NA	NOT APPLICABLE
NEC	NATIONAL ELECTRICAL CODE
NEUT OR N	NEUTRAL
NIC	NOT IN CONTRACT
NS	NO SCALE
NTS	NOT TO SCALE
OC	ON CENTER
OD	OUTSIDE DIAMETER
P	POLE
PA	PUBLIC ADDRESS
PB	PANELBOARD, PULL BOX, OR PUSHBUTTON
PBB	PRIMARY BONDING BUSBAR
PBPU	PREFABRICATED BEDSIDE PATIENT UNIT
PED	PEDESTAL
PEND	PENDANT
PF	POWER FACTOR
PH	PHASE
PNL	PANEL
PVC	POLYVINYL CHLORIDE (PLASTIC)
PWR	POWER
RCP	REFLECTED CEILING PLAN
REC	RECESSED
RECPT	RECEPTACLE
RGS	RIGID GALVANIZED STEEL
RM	ROOM
REQD	REQUIRED
SF	SQUARE FOOT (FEET)
SHT	SHEET
SI	INTERNATIONAL SYSTEM OF UNITS
SM	SURFACE MOUNTED
SPEC	SPECIFICATION
SURF	SURFACE
SW	SWITCH
TBC	TELECOMMUNICATIONS BONDING BUSBAR
TEL	TELEPHONE
TP	TWISTED PAIR
TPS	TWISTED PAIR SHIELDED
TR	TELECOMMUNICATIONS ROOM
TTB	TELEPHONE TERMINAL BOARD
TV	TELEVISION
TYP	TYPICAL
MSB	MAIN SWITCH BOARD
UFD	UNDERFLOOR DUCT
UGND	UNDERGROUND
UL	UNDERWRITERS LABORATORY
UON	UNLESS OTHERWISE NOTED
UPS	UNINTERRUPTIBLE POWER SUPPLY
UTIL	UTILITY
V	VOLT
WP	WEATHERPROOF

COMMUNICATION SYMBOLS

SYMBOL	DESCRIPTION
CH	WORK AREA TCO, COMBINATION TELEPHONE/DATA COMMUNICATION OUTLET - 4 DATA PORT FACE PLATE WITH 4 DATA PORTS - (1) CAT6A CABLE PER PORT.
	CH = COUNTER HEIGHT
	FLOOR RECEPTACLE, (VOIP) TELEPHONE
	FLOOR RECEPTACLE, COMBINATION TELEPHONE/DATA COMMUNICATION OUTLET - 4 DATA PORTS - (1) CAT6A CABLE PER PORT.
J	OUTLET (VOIP) TELEPHONE, (1) PORT; (1) CAT6A CABLE. LETTER INDICATES AS FOLLOWS: J = JACK TYPE 18" AFF W = WALL TYPE 48" AFF WITH MOUNTING POSTS
#	OUTLET DATA ONLY - (1) CAT6A CABLE PER PORT. # = NUMBER OF PORTS, CH = COUNTER HEIGHT
	CEILING MOUNTED WIRELESS ACCESS POINT (WAP) - (2) CAT6A CABLES
CR	PROXIMITY CARD READER, MTD. 4'-0" AFF UNLESS OTHERWISE NOTED.
KP	NUMERIC KEYPAD, MTD. 4'-0" AFF UNLESS OTHERWISE NOTED.
CP	COMBINATION CARD READER/NUMERIC KEYPAD, MTD. 4'-0" AFF UNLESS OTHERWISE NOTED.
RE	REQUEST TO EXIT DEVICE IN DOOR HARDWARE.
RE	DUAL-TECHNOLOGY (MOTION/ PIR) REQUEST TO EXIT DEVICE MOUNTED ABOVE DOOR.
	CEILING MOUNTED, DUAL TECHNOLOGY MOTION SENSOR FOR INTRUSION DETECTION SYSTEM.
	WALL MOUNTED AT 7' AFF, DUAL TECHNOLOGY MOTION SENSOR FOR INTRUSION DETECTION SYSTEM.
A	SECURITY ACCESS, VIDEO CAMERA WITH LENS LETTER = CAMERA IDENTIFICATION - REFER TO CAMERA SCHEDULE FOR ADDITIONAL INFORMATION
D	SECURITY DURESS BUTTON D = DURESS P = PANIC
	TELECOM GROUND BUS BAR, COPPER
	TELEPHONE TERMINAL CABINET
TTB	TELEPHONE BACKBOARD (WALL MOUNTED)
	4-POST NETWORK EQUIPMENT RACK.
	VERTICAL CABLE MANAGEMENT.
	LADDER TYPE CABLE TRAY; SIZE AND MOUNTING HEIGHT AS INDICATED ON PLANS.
	BASKET/SOLID BOTTOM/CHANNEL TYPE CABLE TRAY; SIZE, TYPE AND MOUNTING HEIGHT AS INDICATED ON PLANS.

DEVICE MOUNTING LOCATION AND HEIGHT NOTES:

1. FOR WHEELCHAIR PATIENT USE MOUNT TELEPHONE OUTLET 36" AFF TO BOTTOM OF OUTLET BOX.
2. DESK PHONES - MOUNT OUTLET 1'-6" AFF.
3. PAY PHONES - MOUNT OUTLET 4'-0" AFF
4. HEIGHT OF TELECART OUTLETS SHALL BE AS INDICATED ON BEDWALLS OR PBPU DETAILS.
5. SEE VA BARRIER FREE DESIGN GUIDE PG-18-13.

GENERAL NOTES

1. PRODUCTS SHALL BE OF MATERIALS THAT ARE SUITABLE FOR THE ENVIRONMENT IN WHICH THEY ARE TO BE INSTALLED.
2. WORKING CLEARANCES AROUND ELECTRICAL EQUIPMENT SHALL BE MAINTAINED IN COMPLIANCE WITH THE NATIONAL ELECTRICAL CODE ARTICLE 110, COORDINATE EQUIPMENT INSTALLATION TO MAINTAIN REQUIRED CLEARANCES.
3. IF AN OUTLET BOX IS REQUIRED TO BE LOCATED IN AN ASSEMBLY OR PARTITION RATED AS "FIRE/SMOKE" OR "SMOKE" OR IDENTIFIED AS EITHER "FIRE/SMOKE" OR "SMOKE", THEN ALL OF THE FOLLOWING CONDITIONS SHALL BE MET:
   A. THE OUTLET BOX SHALL BE METALLIC.
   B. THE OUTLET BOX OPENINGS SHALL OCCUR ONLY ON ONE SIDE OF THE FRAMING SPACE.
   C. THE OUTLET BOX OPENINGS SHALL NOT EXCEED 16 SQUARE INCHES.
   D. ALL CLEARANCES BETWEEN THE OUTLET BOX AND THE WALL BOARD MATERIAL SHALL BE COMPLETELY SEALED WITH APPROVED MATERIALS IN ACCORDANCE WITH THE APPLICABLE CODES AND STANDARDS FOR THE PROJECT.
   E. PROVIDE A SUPPLEMENTAL BARRIER AROUND OUTLETS LARGER THAN 16 INCHES SO THAT THE ORIGINAL RATING OF THE PENETRATION IS MAINTAINED.
   F. THE TOTAL AGGREGATE SURFACE AREA OF THE OUTLET BOX SHALL NOT EXCEED 100 SQUARE INCHES PER 100 SQUARE FEET.
   G. THE OUTLET BOX SHALL BE SEPARATED FROM OPENINGS ON THE OPPOSITE SIDE OF THE RATED PARTITION BY A MINIMUM HORIZONTAL DISTANCE OF 24 INCHES.
   H. THE OUTLET BOX SHALL BE SECURELY FASTENED TO A PARTITION FRAMING MEMBER BY MEANS OF AN APPROVED ATTACHMENT METHOD.
   I. OPENINGS CUT INTO THE WALL BOARD MATERIAL SHALL NOT EXCEED 1/8 INCH BETWEEN THE EDGES OF THE OUTLET BOX AND THE EDGES OF THE OPENING.
4. LOCATIONS OF EQUIPMENT SHOWN ON THE DRAWINGS ARE APPROXIMATE, COORDINATE EXACT EQUIPMENT LOCATION AND CONNECTION REQUIREMENTS WITH THE APPROPRIATE TRADE PRIOR TO INSTALLATION.
5. FOR EXACT LOCATION OF CEILING MOUNTED EQUIPMENT REFER TO THE ARCHITECTURAL REFLECTED CEILING PLAN. LOCATIONS OF EQUIPMENT NOT INCLUDED ON THE REFLECTED CEILING PLAN SHALL BE COORDINATED WITH THOSE ITEMS SHOWN. COORDINATION OF CEILING MOUNTED EQUIPMENT SHALL BE PRIOR TO ANY ROUGH-IN. NOTIFY ARCHITECT OF ANY DISCREPANCY.
6. PROVIDE FINAL CONNECTIONS TO OWNER PROVIDED EQUIPMENT WHERE INDICATED ON THE PLAN DRAWINGS.
7. PRIOR TO ROUGH-IN AND INSTALLATION OF ANY FLOOR MOUNTED DEVICE, VERIFY LOCATION WITH THE ARCHITECT.
8. VERIFY AND COORDINATE THE LOCATION OF REQUIRED DIVISION 27 OUTLETS WITH OTHER TRADE DRAWINGS AND OWNER PROVIDED EQUIPMENT.
9. ALL RACEWAY SYSTEMS SHOWN TO SUPPORT THE INSTALLATION OF THE DIVISION 27 EQUIPMENT SHALL BE PROVIDED BY THE ELECTRICAL CONTRACTOR. PROVIDE COORDINATION FOR THE INSTALLATION OF THIS RACEWAY SYSTEM WITH THE ELECTRICAL CONTRACTOR.
10. EACH VOICE/DATA OUTLET LOCATION SHOWN, SHALL HAVE A DOUBLE GANG OUTLET BOX WITH A SINGLE GANG PLASTER RING AND (1) 1-1/2" CONDUIT STUBBED UP TO AN ACCESSIBLE LOCATION ABOVE THE FINISHED CEILING OR TO AN ACCESSIBLE CABLE TRAY WHERE PROVIDED. WORK BY ELECTRICAL CONTRACTOR PER SPECS.
11. ALL BONDING AND GROUNDING ELEMENTS UTILIZED FOR STRUCTURED CABLING SYSTEM SHALL BE IN COMPLIANCE WITH SPECIFICATION SECTION 260200.
12. PROVIDE ALL SLEEVES AS REQUIRED FOR ALL LOW VOLTAGE CABLE PATHWAYS. RESTORE THE FIRE RATING OF THE SURFACE.
13. CABLE INSTALLED BELOW SLAB SHALL HAVE INDOOR/OUTDOOR RATED JACKET FOR PROTECTION OF STRUCTURED CABLE.
14. TELECOMMUNICATIONS ROOM SHALL BE BONDED AND GROUNDED IN ACCORDANCE WITH TIA-607D.
15. ALL TELECOMMUNICATIONS CONDUITS SHALL BE PROVIDED WITH BUSHINGS AT EACH END FOR PROTECTION OF STRUCTURED CABLE.
16. CAT6A CABLE BUNDLE SIZES AND CABLES ENCLOSED IN CONDUITS SHALL NOT EXCEED CABLE QUANTITIES INDICATED IN NEC TABLE 725.144, UNLESS CABLES ARE UL LISTED AS X-LP (0.5A). TYPE 4 POE CABLES WITHOUT LP CERTIFICATION ARE SUBJECT TO INSPECTION TO ENSURE BUNDLE SIZE AND CURRENT LIMITATIONS PER NEC TABLE 725.144 ARE NOT EXCEEDED.
17. PROVIDE FACTORY PRE-TERMINATED CAT6A AND FIBER OPTIC CABLES WHEN DISTANCES ARE KNOWN. FIELD TERMINATED CABLES ARE ALLOWED IF KNOWN DISTANCES ARE NOT ABLE TO BE DETERMINED.
18. BUNDLE CABLES TOGETHER IN GROUPS OF RELEVANCE (FOR EXAMPLE, CABLES TO A SINGLE EQUIPMENT DISTRIBUTOR OR UPLINKS TO CORE DEVICES), AS THIS WILL EASE MANAGEMENT AND TROUBLESHOOTING.
19. BUNDLES OF CABLES, WHEN NECESSARY, SHOULD BE BUILT FROM SUB-BUNDLES OF NO MORE THAN 6-8 INDIVIDUAL CABLES. THE LARGER BUNDLES SHOULD NOT EXCEED FOUR SUB-BUNDLES OF LIKE QUANTITY.
20. WHEN BUNDLING OR SECURING CABLES, USE VELCRO-BASED TIES NOT MORE THAN EVERY 3 FT TO 6 FT, AND MORE FREQUENTLY AS NEEDED TO MAINTAIN A CLEAN INSTALLATION. DO NOT USE ZIP TIES OR TWIST TIES FOR CABLE BUNDLING OR SECURING, AS THESE APPLY PRESSURE AT CONCENTRATED LOCATIONS ON THE CABLES AND WILL CAUSE DAMAGE.
21. ONLY BUNDLE LIKE CABLE TYPES. DO NOT BUNDLE FIBER, POWER, AND UTP TOGETHER.

PULL SCHEDULE REQUIREMENTS

CONTRACTOR SHALL PROVIDE PULL SCHEDULE WITH TELECOM SHOP DRAWINGS. TELECOM SHOP DRAWINGS WILL NOT BE REVIEWED UNLESS THEY INCLUDE PULL SCHEDULES.

CAT6A COPPER CABLE COLOR CODING

WHITE	- VOICE
YELLOW/GREEN/GREY	- DATA
ORANGE	- MEDICAL WIFI, GUEST WIFI, VA WIFI
VIOLET	- VIDEO SURVEILLANCE
BLUE	- NURSE CALL
RED	- FIRE ALARM
BLACK	- BAS & DAS

SHEET LIST

SHEET NUMBER	SHEET NAME
T-001	TELECOM LEGEND, ABBREV, AND GENERAL NOTES
T-101	TELECOM FLOOR PLANS - DATA CENTER
T-501	TELECOM - TYPICAL RACK ELEVATIONS
T-502	TELECOM - TYPICAL DATA CENTER ELEVATIONS
T-503	TELECOM DATA CENTER DETAILS
T-601	DATA CENTER CABLING MAP

COORDINATION NOTES:

STRUCTURED CABLING SYSTEM (SCS):
THE SCS CONTRACTOR (SCSC) SHALL PROVIDE ALL BACKBONE AND HORIZONTAL CABLING, COMPONENTS AND TERMINATIONS AS REQUIRED FOR A COMPLETE AND OPERATIONAL CABLING SYSTEM PER INDUSTRY BEST PRACTICES AS PRESCRIBED BY BICSI AND NEC.

THE SCSC SHALL BE RESPONSIBLE FOR COORDINATION WITH THE ELECTRICAL CONTRACTOR (EC) FOR SPECIFIC LOCATIONS OF ALL TELECOMMUNICATIONS SYSTEM DEVICES, INCLUDING ANCILLARY SYSTEM COMPONENTS AND ASSOCIATED CONDUITS PROVIDED BY THE EC.

THE ELECTRICAL CONTRACTOR (EC) SHALL BE RESPONSIBLE FOR PROVIDING AND INSTALLING ALL ROUGH-IN COMPONENTS ASSOCIATED WITH THE TELECOMMUNICATIONS SYSTEM COMPONENTS AS NOTED ON THE DRAWINGS AND SPECIFICATIONS, INCLUDING BUT NOT LIMITED TO, CONDUIT AND BACK-BOXES. THE EC SHALL COORDINATE ALL REQUIREMENTS WITH THE SCS CONTRACTOR.

TELECOM ROOM (TR) EQUIPMENT RACKS:
THE SCS CONTRACTOR (SCS) SHALL FURNISH AND INSTALL ALL EQUIPMENT RACKS. THE SCS CONTRACTOR SHALL FURNISH AND INSTALL ALL CABLING PATCH PANELS (COPPER AND FIBER) WITH RACK, AND SHALL BE RESPONSIBLE FOR ALL CABLE TERMINATIONS AT THE PATCH PANELS.

THE VA SHALL BE RESPONSIBLE FOR FURNISHING AND INSTALLING ALL ACTIVE EQUIPMENT, CONTROLLERS, SWITCHES, ETC. THAT RESIDE WITHIN THESE RACKS.

ACCESS CONTROL:
THE SCS CONTRACTOR (SCS) SHALL BE RESPONSIBLE FOR INSTALLING ALL CABLING AND DEVICES TO SUPPORT THE VA PROVIDED SECURITY HEAD END EQUIPMENT. VA SHALL INSTALL, CONNECT AND CONFIGURE FINAL SECURITY HEAD END EQUIPMENT.

THE ELECTRICAL CONTRACTOR (EC) SHALL BE RESPONSIBLE FOR PROVIDING AND INSTALLING ALL ROUGH-IN COMPONENTS ASSOCIATED WITH THE SECURITY SYSTEM AS NOTED ON THE DRAWINGS AND SPECIFICATIONS, INCLUDING BUT NOT LIMITED TO, CONDUIT AND BACK-BOXES. THE EC SHALL COORDINATE WITH THE SCS CONTRACTORS.

GROUNDING AND BONDING:
THE EC SHALL BE RESPONSIBLE FOR INSTALLING THE GROUNDING BUSBAR(S) AS ILLUSTRATED ON THE DRAWINGS AND SPECIFICATIONS, AND CONNECTING IT TO THE BUILDING MAIN ELECTRICAL SERVICE GROUND. THE EC SHALL BE RESPONSIBLE FOR GROUNDING ALL BACKBONE CONDUIT AND CABLE TRAY.

THE SCSC SHALL BE RESPONSIBLE FOR GROUNDING ALL RACKS, CABINETS, ENCLOSURES, PROTECTOR BLOCKS AND CABLE LADDER-RACK INSIDE TELECOMMUNICATIONS ROOMS.

FIRESTOPPING:
THE EC SHALL BE RESPONSIBLE FOR FIRE-STOPPING SLEEVE ASSEMBLIES TO OBTAIN A UL RATING.

THE SCSC SHALL BE RESPONSIBLE FOR FIRE-STOPPING INSIDE THE SLEEVES AFTER CABLE INSTALLATION IS COMPLETE.

CASEWORK / MILLWORK:
THE SCSC SHALL BE RESPONSIBLE FOR INSTALLING TELECOMMUNICATIONS OUTLETS IN CASEWORK, AS REQUIRED. CABLES SHALL BE CONCEALED IN CASEWORK.

THE EC SHALL BE RESPONSIBLE FOR INSTALLING ASSOCIATED CONDUIT AND BACK-BOXES AND SHALL STUB CONDUIT TO THE ABOVE ACCESSIBLE CEILING SPACE.

CONDUIT:
THE EC SHALL BE RESPONSIBLE TO PROVIDE AND INSTALL ALL BACKBONE AND HORIZONTAL CABLING PATHWAYS. THIS SHALL INCLUDE ALL INTERIOR CONDUITS, PATHWAY COMPONENTS SUCH AS JUNCTION BOXES, PULL BOXES, WALL/CEILING PENETRATIONS AND CONDUIT SLEEVES, WHETHER SHOWN ON THE DRAWINGS OR AS REQUIRED TO PENETRATE FULL-HEIGHT PARTITIONS AS SHOWN ON THE DRAWINGS. THE EC SHALL PROVIDE AND INSTALL ALL BUSHINGS ON TELECOMMUNICATIONS CONDUITS PRIOR TO INSTALLATION OF CABLING.

THE SCSC SHALL BE RESPONSIBLE FOR ALL WIRE RACEWAYS, CABLE RUNWAY (LADDER RACK) AND OTHER REQUIREMENTS FOR ROUTING AND SECURING CABLE INSIDE THE MAIN TELECOMMUNICATIONS ROOM (MTR) AND ALL TR'S.

TELECOMMUNICATIONS COMMUNICATIONS OUTLETS (C.O.'S) AND DEVICES:
THE EC SHALL BE RESPONSIBLE FOR PROVIDING AND INSTALLING ALL CONDUIT AND BACK-BOXES ASSOCIATED WITH THE TELECOMMUNICATIONS C.O.'S AND DEVICES.

THE SCSC SHALL BE RESPONSIBLE FOR INSTALLATION OF ALL STRUCTURED CABLING, JACKS, FACEPLATES AND JUMPER/PATCH CORDS.

BACKBOARDS:
THE EC SHALL BE RESPONSIBLE FOR PROVIDING AND INSTALLING ALL BACKBOARDS AS ILLUSTRATED ON THE DRAWINGS AND AS REQUIRED FOR A COMPLETE SYSTEM AS ILLUSTRATED IN THE SPECIFICATIONS. THE EC SHALL BE RESPONSIBLE FOR ROUGH-IN OF ALL CONDUIT AND BACK-BOXES. POWER CONDUITS SHALL BE CONCEALED BEHIND ALL BACKBOARDS. BACKBONE CONDUIT SHALL BE EXPOSED AS ILLUSTRATED ON THE DRAWINGS (TR WALL ELEVATIONS).

Revisions | Date

CONSULTANT
Above Group
ENGINEERING. DESIGN. CONSULTING.
www.abovegroupinc.com
COA/CA Lic. No. 31120
305 East Dr., Suite H,
Melbourne, Florida 32904
PH: 321.345.9026

ARCHITECT/ENGINEER OF RECORD
RDC JPA ARCHITECTURE
524 Fernwood Drive, Altamonte Springs, Florida 32701 | www.rdcjpa.com | 800.362.1523

STAMP
REGISTERED COMMUNICATIONS DISTRIBUTION DESIGNER
Bicsi
Christopher Van Meter
BICSI ID # 285002
EXPIRES 12-31-28
RCDD

Office of Construction and Facilities Management
VA U.S. Department of Veterans Affairs

Drawing Title: TELECOM LEGEND, ABBREV, AND GENERAL NOTES	Phase: BID DOCUMENTS	Project Title: GAINESVILLE DATA CENTER	Project Number: 573-21-106
			Building Number:
Approved: STATION CHIEF - EDWIN BURNETT	FULLY SPRINKLERED	Location: GAINESVILLE, FL	Drawing Number: T-001
		Issue Date: 04.20.2026 / Checked: TDB / Drawn: CVM	

Autodesk Docs://Florida, Gainesville VA\122085_VA Gainesville_Data Ctr_R25_MEPT.rvt
4/17/2026 1:13:51 PM
VA FORM 08 - 6231

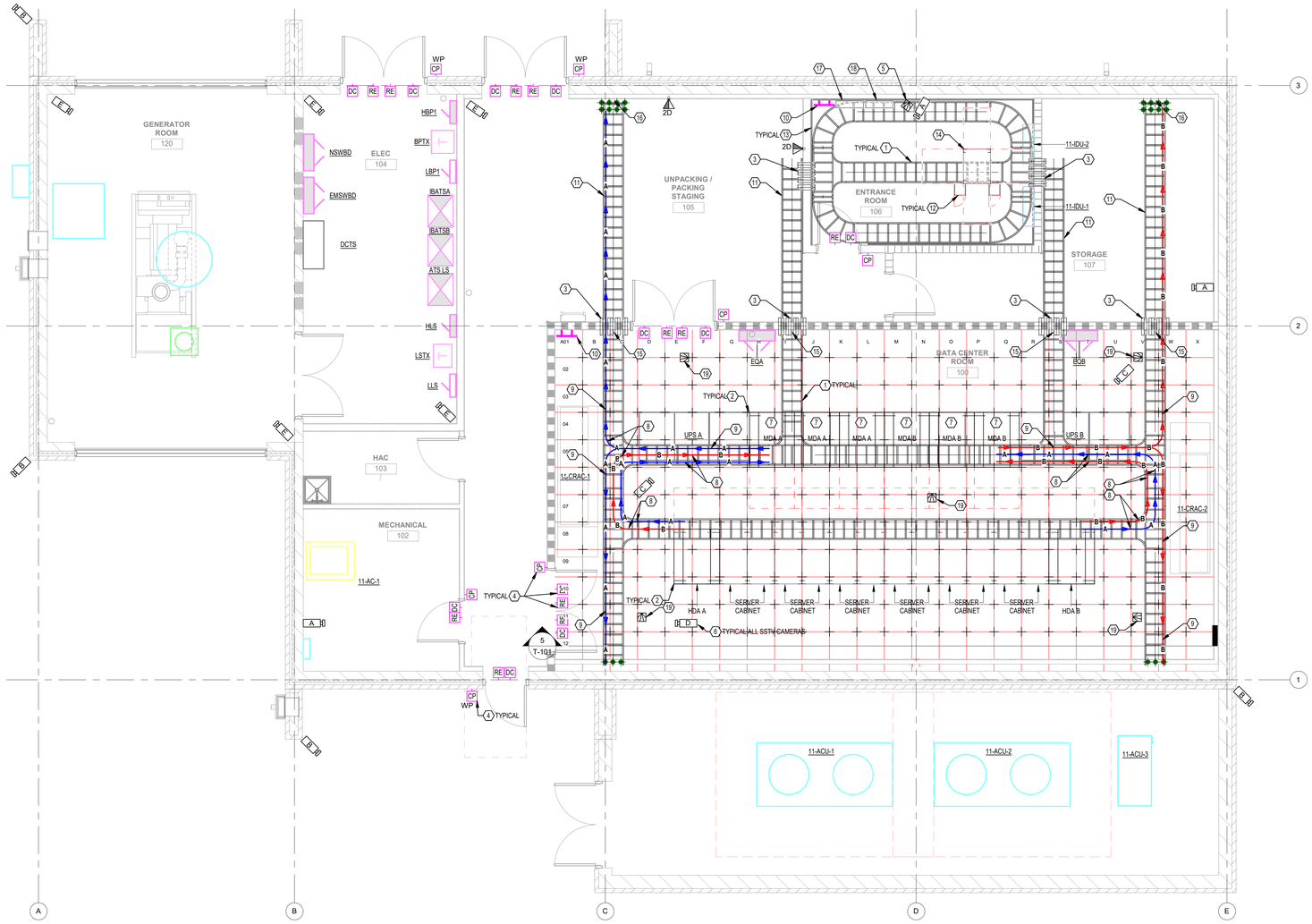

1 DATA CENTER - FIRST FLOOR - TECHNOLOGY NEW WORK
1/4" = 1'-0"

DRAWING NOTES:

1. ALL ENCLOSURES, RACKS AND CABLE TRAYS SHALL BE PROPERLY GROUNDED AND BONDED PER NFPA 70 AND VA TIL.

CODED NOTES:

1. 18" X 4" BASKET STYLE CABLE TRAY ROUTED AT 96" ABOVE FINISHED FLOOR FOR DISTRIBUTION OF DATA CENTER CABLING. COORDINATE EXACT ROUTING OF CABLE TRAY WITH EXACT EQUIPMENT LOCATIONS, AND CONDUIT ENTRY/EXIT POINTS.
2. REFER TO SHEET T-502 FOR DATA CENTER MDA AND HDA CABINET REQUIREMENTS.
3. PROVIDE 4" SLEEVES WITH BUSHING ON BOTH ENDS. COORDINATE EXACT LOCATION OF SLEEVES WITH CABLE TRAY AND EXISTING CONDITIONS PRIOR TO CONSTRUCTION. PROVIDE UL LISTED FIRE ASSEMBLY OR SYSTEM TO MAINTAIN FIRE RATING OF FIRE BARRIER AS REQUIRED. REFER TO ARCHITECTURAL DRAWINGS FOR WALL RATINGS. REFER TO CONDUIT FILL CHARTS ON SHEET T-001 FOR CONDUIT FILL INFORMATION.
4. CONNECT NEW ACCESS CONTROL DEVICE TO NEW ACCESS CONTROL PANEL IN ROOM 106. PROVIDE CABLE AND CONDUIT AS REQUIRED FOR CONNECTION. NEW ACCESS CONTROL DEVICE SHALL MATCH CAMPUS EXISTING IN MAKE MODEL AND COLOR.
5. INSTALL NEW WALL MOUNTED MOTION SENSOR. CONNECT NEW INTRUSION DETECTION DEVICE TO NEW INTRUSION DETECTION SYSTEM PANEL IN ROOM 106. PROVIDE CABLE AND CONDUIT AS REQUIRED FOR INSTALLATION.
6. CONNECT NEW SSTV CAMERA TO EXISTING SSTV SYSTEM. PROVIDE CONDUIT AND CABLE FOR CONNECTION TO NEW SSTV PATCH PANEL IN ROOM 106. PROVIDE CAT6A CABLE AND CONDUIT AS REQUIRED FOR CONNECTION.
7. UTILIZE OM4 FIBER OPTIC CABLE IN A MESH BETWEEN THE MDAS AND THE HDAS, CAT 6A COPPER UNSHIELDED TWISTED PAIR (UTP) FROM THE MDAS TO THEIR RESPECTIVE HDAS, AND A COMBINATION OF OM4 FIBER AND CAT 6A COPPER UTP FROM THE HDAS TO EACH IT EQUIPMENT ENCLOSURE LOCATION. ALL CABLES MUST BE PRETERMINATED. NO FIELD TERMINATIONS ALLOWED FOR INTERCONNECTIONS BETWEEN HDA AND MDA OR BETWEEN IT EQUIPMENT AND HDAS.
   - PROVIDE BACKBONE FIBER OPTIC CABLE - MPO-MPO (TYPE-A) 12-FIBER OM4 FIBER BACKBONE BETWEEN THE FIBER CASSETTES IN EACH REDUNDANT A/B MDA TO THE CORRESPONDING FIBER CASSETTES IN EACH REDUNDANT HDA. (A TOTAL OF EIGHT (8) 12-STRAND CABLES ARE REQUIRED.)
   - HORIZONTAL FIBER – MPO-MPO (TYPE A) 12-FIBER OM4 FIBER BACKBONE BETWEEN THE FIBER CASSETTES IN EACH REDUNDANT A/B HDA TO THE CORRESPONDING A/B FIBER CASSETTES IN EACH SERVER CABINET. (A TOTAL OF FOUR (4) ARE REQUIRED IN EACH STANDARD DENSITY SERVER CABINET.)
   - HORIZONTAL COPPER – UTP MEDIA BASIS OF DESIGN IS ATLAS-X1 COPPER TRUNKS CAT 6A UTP CABLE ASSEMBLY BUNDLE OF 6 BLUE CABLES, BERK-TEX - LANMARK-10G2 (UTP) BRANDED CABLE. TERMINATION - ATLAS-X1 EZ-HD. "A" SIDE CONNECTIONS JACK COLOR - BLUE, "B" SIDE CONNECTIONS JACK COLOR - YELLOW.
8. REDUNDANT FIBER OPTIC AND CAT 6A CABLING BETWEEN HDAS AND MDAS MUST BE ROUTED IN CABLE TRAY UTILIZING DIVERSE ROUTING.
9. REDUNDANT FIBER OPTIC CABLING BETWEEN MDAS AND TELECOM ROOMS MUST BE ROUTED OUT OF DATA CENTER IN CABLE TRAY UTILIZING DIVERSE ROUTING.
10. MOUNT GROUND BAR AT 8'-0" ABOVE FINISHED FLOOR. SEE DETAIL 1 ON SHEET T-503 FOR MORE INFORMATION. ALL VERTICAL/HORIZONTAL CABLE TRAY AND RACKS SHALL BE BONDED TO BUSBAR. REFER TO DETAILS ON SHEET T-503 FOR ADDITIONAL INFORMATION.
11. 18" X 4" BASKET STYLE CABLE TRAY ROUTED ABOVE ACCESSIBLE CEILING. MOUNT CABLE TRAY AT 6" FROM BOTTOM OF CABLE TRAY TO CEILING TILE. MAINTAIN 12" CLEAR ABOVE CABLE TRAY. COORDINATE EXACT ROUTING OF CABLE TRAY WITH EXACT EQUIPMENT LOCATIONS, AND CONDUIT ENTRY/EXIT POINTS.
12. VERTICAL WIRE MANAGERS, 6" X 7".
13. PROVIDE TIA APPROVED, FIRE RATED, AC GRADE PLYWOOD BACKBOARD 4'x8'x1/2", OR APPROVED FIRE PLYWOOD. PAINT ON ALL SIDES AND WITHIN CUTOUT AREAS WITH AT LEAST (2) COATS OF FIRE RETARDANT, LIGHT COLORED PAINT. LOCATE BACKBOARD 12" AFF, INSTALL SO 'A' SIDE OF PLYWOOD IS EXPOSED.
14. PROVIDE 24" X 30" 45RU 4-POST EQUIPMENT RACK. REFER TO SHEET T-501 FOR RACK DETAILS.
15. PROVIDE 18" X 4" LADDER STYLE CABLE TRAY MOUNTED VERTICALLY ON WALL FROM HORIZONTAL CABLE TRAY TO THROUGH WALL SLEEVES.
16. PROVIDE 18" X 4" LADDER STYLE CABLE TRAY MOUNTED VERTICALLY ON WALL FROM HORIZONTAL CABLE TRAY ABOVE CEILING TO SITE COUNDUIT STUB UPS THROUGH SLAB.
17. NEW ACCESS CONTROL PANEL.
18. NEW INTRUSION DETECTION PANEL.
19. INSTALL NEW PENDANT MOUNTED MOTION SENSOR FROM STRUCTURE. CONNECT NEW INTRUSION DETECTION DEVICE TO NEW INTRUSION DETECTION SYSTEM PANEL IN ROOM 106. PROVIDE CABLE AND CONDUIT AS REQUIRED FOR INSTALLATION.

CAMERA SCHEDULE

CAMERA ID	VIEW ANGLE (DEGREES)	MULTI - LENS	FISH EYE	ZOOM	PAN/ TILT	WEATHER PROOF	REQUIRED ANALYTICS	MOUNTING METHOD	MOUNTING HEIGHT	NOTES
A	90	No	No	No	No			WALL MOUNTED	7' AFF	MOTION ACTIVATED
B	270	Yes	No	No	No	Yes		CORNER MOUNTED	ROOF EDGE	EXTERIOR CORNER MOUNTED CAMERA, MOTION ACTIVATED
C	90	No	No	No	No			PENDANT FROM STRUCTURE	8' AFF	MOTION ACTIVATED
D	180	Yes	No	No	No			PENDANT FROM STRUCTURE	8' AFF	DUAL FACING MULTI-LENS CAMERA ORIENT ONE LENS ON DOORS AND ONE LENS ON AISLE. MOTION ACTIVATED
E	90	No	No	No	No			CORNER MOUNT	CEILING HEIGHT	MOTION ACTIVATED

PROVIDE SURGE PROTECTION FOR ALL METALLIC CABLES THAT PENETRATE BUILDING ENVELOPE, OR ARE CONNECTED TO DEVICES MOUNTED TO EXTERIOR OF BUILDING. SURGE PROTECTION EQUIPMENT MUST BE RATED FOR POE FOR CABLING PROVIDING POE POWER TO DEVICE. LOCATE SURGE PROTECTION DEVICES AT THE CLOSEST LOCATION TO THE POINT OF ENTRANCE THAT IS CONCEALED AND ACCESSIBLE WHILE PRESERVING THE SHORTEST DISTANCE BETWEEN THE PROTECTOR AND BONDING CONDUCTOR.

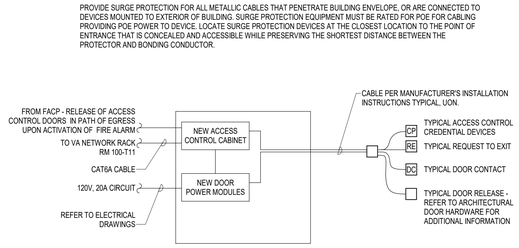

2 ACCESS CONTROL DIAGRAM
N.T.S.

PROVIDE SURGE PROTECTION FOR ALL METALLIC CABLES THAT PENETRATE BUILDING ENVELOPE, OR ARE CONNECTED TO DEVICES MOUNTED TO EXTERIOR OF BUILDING. SURGE PROTECTION EQUIPMENT MUST BE RATED FOR POE FOR CABLING PROVIDING POE POWER TO DEVICE. LOCATE SURGE PROTECTION DEVICES AT THE CLOSEST LOCATION TO THE POINT OF ENTRANCE THAT IS CONCEALED AND ACCESSIBLE WHILE PRESERVING THE SHORTEST DISTANCE BETWEEN THE PROTECTOR AND BONDING CONDUCTOR.

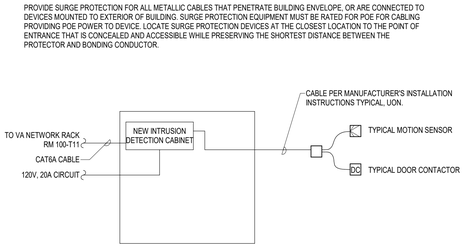

3 INTRUSION DETECTION DIAGRAM
N.T.S.

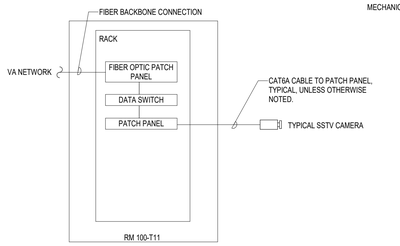

4 SSTV DIAGRAM
N.T.S.

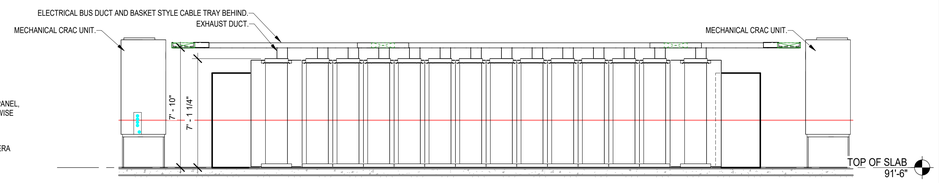

5 DATA CENTER ELEVATION
1/4" = 1'-0"

N
0 2' 4' 8' 12'
1/4" = 1'-0"

CONSULTANT
Above Group
ENGINEERING. DESIGN. CONSULTING.
www.abovegroupinc.com
COA/CA Lic. No. 31120
305 East Dr., Suite H,
Melbourne, Florida 32904
PH: 321.345.9026

ARCHITECT/ENGINEER OF RECORD
RDC JPA ARCHITECTURE
524 Fernwood Drive, Altamonte Springs, Florida 32701 | www.rdcjpa.com | 800.362.1523

STAMP
REGISTERED COMMUNICATIONS DISTRIBUTION DESIGNER
BICSI
Christopher Van Meter
BICSI ID # 285002
EXPIRES 12-31-28
RCDD

Office of Construction and Facilities Management
VA U.S. Department of Veterans Affairs

Drawing Title	TELECOM FLOOR PLANS - DATA CENTER
Phase	BID DOCUMENTS
Project Title	GAINESVILLE DATA CENTER
Project Number	573-21-106
Building Number	43
Approved:	STATION CHIEF - EDWIN BURNETT
	FULLY SPRINKLERED
Location	GAINESVILLE, FL
Issue Date	04.20.2026
Checked	TDB
Drawn	CVM
Drawing Number	T-101

Revisions | Date

Autodesk Docs://Florida_Gainesville VA122085_VA Gainesville_Data Ctr_R25_MEPT.rvt
4/17/2026 1:13:57 PM

VA FORM 08 - 6231

TELECOMMUNICATION ROOM TERMINATION AND HARDWARE SCHEDULE				
BUILDING NUMBER	LEVEL	TELECOMMUNICATIONS ROOM NUMBER	TOTAL CAT6A CABLE TERMINATIONS PER TR	MINIMUM NUMBER OF PATCH PANELS
DATA CENTER	1	100-T11	17	1

NOTES:
1. SEE SHEET T-101 FOR TELECOMMUNICATIONS ROOM EQUIPMENT LOCATIONS.
2. EXACT NUMBER OF CAT6A TERMINATIONS SHALL BE VERIFIED BY CONTRACTOR PRIOR TO EQUIPMENT AND CABLE PURCHASING.

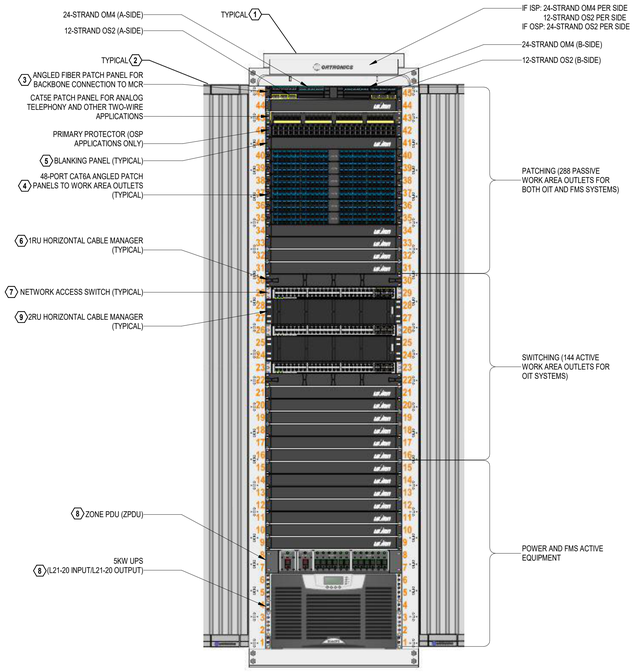

1 TYPICAL 1 RACK ELEVATION
N.T.S.

DRAWING NOTES:

1. RACK ELEVATIONS ON THIS SHEET ARE TYPICAL AND SHOW GENERAL LAYOUT AND QUANTITY INFORMATION.
2. REFER TO TELECOMMUNICATION ROOM TERMINATION AND HARDWARE SCHEDULE ON THIS SHEET FOR QUANTITIES OF NETWORK SWITCHES AND PATCH PANELS FOR EACH TELECOM ROOM. IF TELECOM ROOM INDICATES MORE THAN (1) RACK, NUMBER OF NETWORK SWITCHES AND PATCH PANELS ARE TO BE DIVIDED AS EVENLY AS POSSIBLE BETWEEN THE NUMBER OF RACKS INDICATED IN THE ROOM.
3. CONTRACTOR TO FOLLOW VA RACK EQUIPMENT LOCATION STANDARDS. TOP THIRD OF RACK IS DESIGNATED FOR FIBER (LIU) SHELF AND NETWORK SWITCHES. MIDDLE THIRD IS DESIGNATED FOR NETWORK PATCH PANELS AND CABLE MANAGEMENT. BOTTOM THIRD IS DESIGNATED FOR RACK POWER DISTRIBUTION EQUIPMENT.
4. CONTRACTOR SHALL PROVIDE LABELING FOR ALL PATCH PANEL PORTS THAT ARE UTILIZED. LABELING SHALL CONSIST OF PORT NUMBER AND OUTLET ROOM NUMBER.
5. PROVIDE LABELING FOR ALL CABLING, CONNECTORS AND EQUIPMENT PER VA STANDARD "INFRASTRUCTURE STANDARD FOR TELECOMMUNICATIONS SPACE", LATEST EDITION.
6. PROVIDE BLANKING PLATES FOR ALL UNUSED PORTIONS OF RACK, UNLESS NOTED OTHERWISE. COORDINATE REQUIREMENT FOR FLAT OR ANGLED BLANKING PLATES WITH ADJACENT RACK MOUNTED EQUIPMENT.
7. PROVIDE FIBER OPTIC AND COPPER (CAT6A) PATCH CABLES AS REQUIRED FOR ALL RACK CONNECTIONS. COORDINATE WITH LOCAL VA IT PERSONNEL.

CODED NOTES:

1. PROVIDE 24" X 30" 45RU 4-POST EQUIPMENT RACK. BASIS OF DESIGN IS ORTRONICS MIGHTY-MO: OR-MM2073038-W, OR APPROVED EQUAL.
2. VERTICAL CABLE MANAGER SIDECAR MINIMUM 6" WIDE X 10" DEEP X 7' TALL. BASIS OF DESIGN IS ORTRONICS OR-MM20VMD706, OR APPROVED EQUAL.
3. 1RU RACK MOUNTED FIBER PATCH UNIT. BASIS OF DESIGN IS LEVITON OPT-X UHDX WITH (12) CASSETTES. CASSETTE BASIS OF DESIGN IS LEVITON HDX ENTERPRISE MTP CORE-A AND CORE-B FIBER BACKBONE CABLING MUST BE TERMINATED ON OPPOSITE SIDES OF THE RACK. 24-STRANDS OF OM4 AND 12 STRANDS OF OS1 PER CORE. IF OUT SIDE PLANT CABLING, 24-STRANDS OF OS2 PER CORE.
4. 1RU CAT 6A PATCH PANEL - ANGLED, HIGH DENSITY, 48 PORT. BASIS OF DESIGN IS LEVITON QUICKPORT 49256-D48. ALL PATCH PANELS MUST BE FROM THE SAME MANUFACTURER.
5. 1RU BLANK COVER PLATE, BLACK.
6. FLAT HORIZONTAL, 1 RU CABLE MANAGEMENT. BASIS OF DESIGN IS LEVITON 5R1UX-CMT.
7. NETWORK SWITCH. FURNISHED BY VA, CONTRACTOR INSTALLED. COORDINATE WITH VA IT PERSONNEL FOR REQUIREMENTS AS NECESSARY.
8. REFER TO ELECTRICAL PLANS FOR ADDITIONAL INFORMATION ON RACK POWER DISTRIBUTION.
9. FLAT HORIZONTAL, 2 RU CABLE MANAGEMENT. BASIS OF DESIGN IS LEVITON 5R2UX-CMT.

Autodesk Docs://Florida, Gainesville VA/12085_VA Gainesville_Data Ctr_R25_MEPT.rvt
4/17/2026 1:13:58 PM

Revisions	Date

CONSULTANT

Above Group
ENGINEERING. DESIGN. CONSULTING.
www.abovegroupinc.com
COA/CA Lic. No. 31120
305 East Dr., Suite H,
Melbourne, Florida 32904
PH: 321.345.9026

ARCHITECT/ENGINEER OF RECORD

RDC JPA ARCHITECTURE
524 Fernwood Drive, Altamonte Springs, Florida 32701 | www.rdcjpa.com | 800.362.1523

STAMP
REGISTERED COMMUNICATIONS DISTRIBUTION DESIGNER
Bicsi
Christopher Van Meter
BICSI ID # 285002
EXPIRES 12-31-28
RCDD

Office of Construction and Facilities Management
VA U.S. Department of Veterans Affairs

Drawing Title: TELECOM - TYPICAL RACK ELEVATIONS	Phase: BID DOCUMENTS	Project Title: GAINESVILLE DATA CENTER	Project Number: 573-21-106
Approved: STATION CHIEF - EDWIN BURNETT	FULLY SPRINKLERED	Location: GAINESVILLE, FL	Building Number:
		Issue Date: 04.20.2026 / Checked: TDB / Drawn: CVM	Drawing Number: T-501

VA FORM 08 - 6231

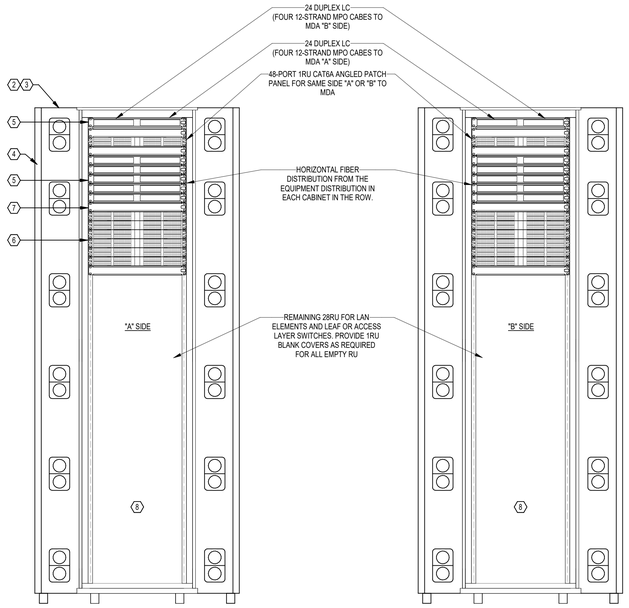

1 TYPICAL DATA CENTER END OF ROW HORIZONTAL DISTRIBUTION ELEVATION
N.T.S.

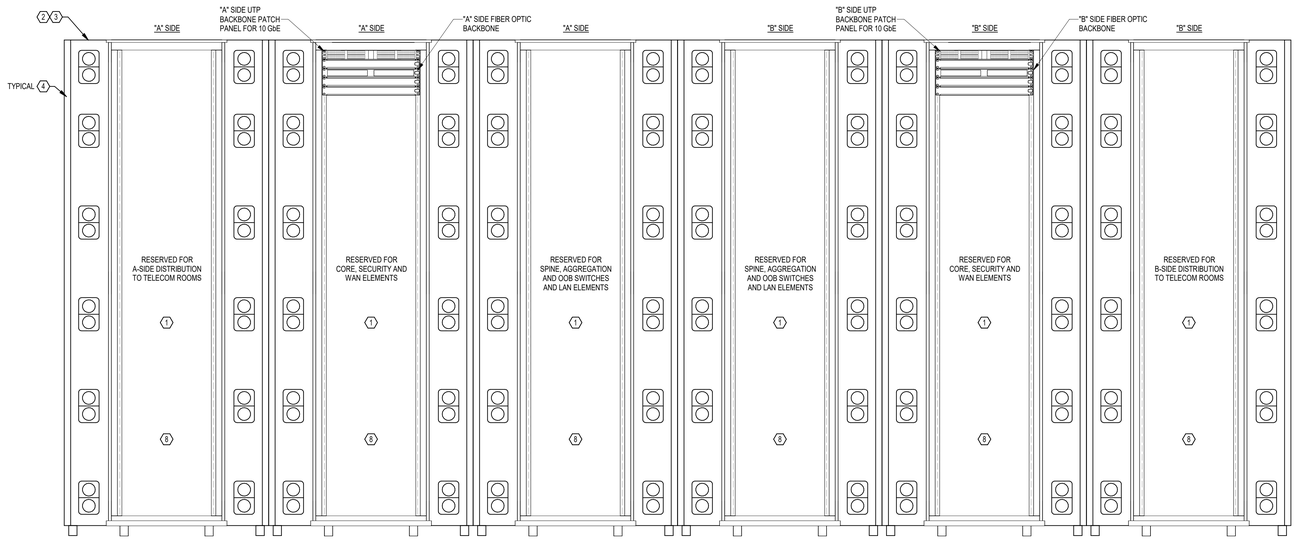

2 TYPICAL DATA CENTER MAIN DISTRIBUTION AREA (A AND B SIDES)
N.T.S.

DRAWING NOTES:

1. RACK ELEVATIONS ON THIS SHEET ARE TYPICAL AND SHOW GENERAL LAYOUT AND QUANTITY INFORMATION.
2. REFER TO TELECOMMUNICATION ROOM TERMINATION AND HARDWARE SCHEDULE ON SHEET T-501 FOR EXACT QUANTITIES OF NETWORK SWITCHES AND PATCH PANELS FOR EACH TELECOM ROOM. IF TELECOM ROOM INDICATES MORE THAN (1) RACK, NUMBER OF NETWORK SWITCHES AND PATCH PANELS ARE TO BE DIVIDED AS EVENLY AS POSSIBLE BETWEEN THE NUMBER OF RACK INDICATED IN THE ROOM.
3. CONTRACTOR TO FOLLOW VA RACK EQUIPMENT LOCATION STANDARDS. TOP THIRD OF RACK IS DESIGNATED FOR FIBER (LIU) SHELF AND NETWORK SWITCHES. MIDDLE THIRD IS DESIGNATED FOR NETWORK PATH PANELS AND CABLE MANAGEMENT. BOTTOM THIRD IS DESIGNATED FOR RACK POWER DISTRIBUTION EQUIPMENT.
4. CONTRACTOR SHALL PROVIDE LABELING FOR ALL PATCH PANEL PORTS THAT ARE UTILIZED. LABELING SHALL CONSIST OF PORT NUMBER AND OUTLET ROOM NUMBER.
5. PROVIDE LABELING FOR ALL CABLING, CONNECTORS AND EQUIPMENT PER VA STANDARD "INFRASTRUCTURE STANDARD FOR TELECOMMUNICATIONS SPACE", LATEST EDITION.
6. PROVIDE BLANKING PLATES FOR ALL UNUSED PORTIONS OF RACK, UNLESS NOTED OTHERWISE.

CODED NOTES:

1. DATA CENTER SERVER CABINET SHALL BE DEDICATED FOR THE INSTALLATION OF SERVER AND STORAGE EQUIPMENT AND SUPPORTING PATCH PANELS ONLY. SERVER CABINETS MAY NOT HOUSE NETWORK EQUIPMENT. REFER TO TYPICAL DATA CENTER SERVER CABINET DETAIL ON THIS SHEET FOR ADDITIONAL INFORMATION.
2. NETWORK CABINETS SHALL BE PURPOSE BUILT TO PROVIDE SUFFICIENT SPACE FOR THE CABLING NEEDS OF THE HORIZONTAL DISTRIBUTION AREA (HDA) AND THE MAIN DISTRIBUTION AREA (MDA). THESE TELECOMMUNICATIONS CABINETS ARE NOT ALLOWED FOR USE IN TELECOMMUNICATION ROOMS (TR).
3. PROVIDE 40"W X 47.3"D X 83.4"H 45RU NETWORK EQUIPMENT CABINET WITH FRONT AIR DAMS AND SIDE PANELS WITH BRUSH SEALED CABLE OPENINGS. REFER TO TYPICAL DATA CENTER NETWORK MDA AND HDA CABINET WITH SIDECARS DETAIL ON THIS SHEET FOR ADDITIONAL INFORMATION.
4. SIDE PANEL WITH BRUSH SEALED CABLE OPENINGS. REFER TO TYPICAL DATA CENTER NETWORK MDA AND HDA CABINET WITH SIDECARS DETAIL ON THIS SHEET FOR ADDITIONAL INFORMATION.
5. 1RU RACK MOUNTED FIBER PATCH UNIT. BASIS OF DESIGN IS LEVITON OPT-X UHDX WITH (12) CASSETTES. CASSETTE BASIS OF DESIGN IS LEVITON HDX ENTERPRISE MTP OM4/OS1. CORE-A AND CORE-B FIBER BACKBONE CABLING MUST BE TERMINATED ON OPPOSITE SIDES OF THE RACK.
6. 1RU CAT 6A PATCH PANEL - ANGLED, HIGH DENSITY, 48 PORT. BASIS OF DESIGN IS LEVITON E2XHD-BLK HIGH DENSITY, ANGLED, 48 POSITION. ALL PATCH PANELS MUST BE FROM THE SAME MANUFACTURER.
7. 1RU ANGLED BLANK COVER PLATE, BLACK.
8. REFER TO ELECTRICAL PLANS FOR ADDITIONAL INFORMATION ON RACK POWER DISTRIBUTION.

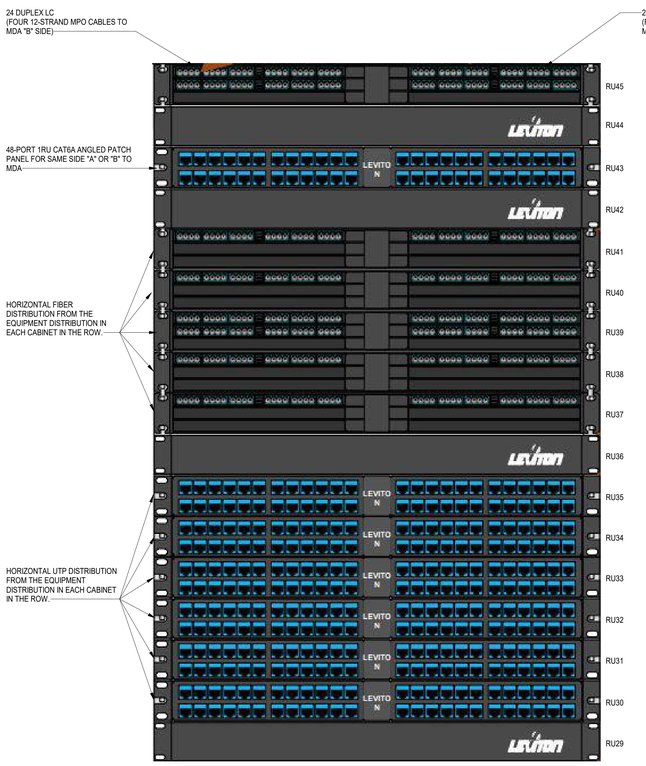

3 TYPICAL STANDARD DENSITY EQUIPMENT DISTRIBUTOR ELEVATION FOR HDA CABINETS
N.T.S.

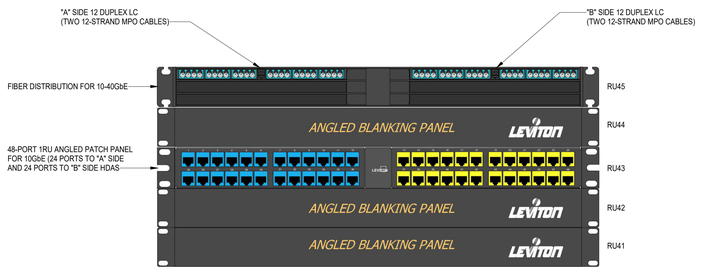

4 TYPICAL STANDARD DENSITY EQUIPMENT DISTRIBUTOR ELEVATION FOR MDA CABINETS
N.T.S.

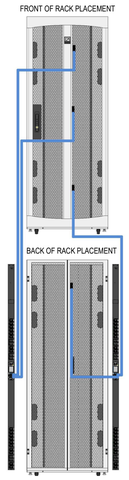

5 TEMPERATURE AND HUMIDITY SENSOR LOCATIONS AND CONNECTIONS
N.T.S.

BASIS OF DESIGN: CHATSWORTH 14665-001 USB TEMPERATURE AND HUMIDITY SENSOR (OR EQUIVALENT)

6 TEMPERATURE AND HUMIDITY SENSOR
N.T.S.

CHATSWORTH ZETAFRAME CABINET - ZB14-A22A-E1. OR APPROVED EQUAL.
23.6"W X 43.3"D X 45RU, GLACIER WHITE, (1) CASTER ONLY KIT, (1) LEVELER ONLY KIT, (4) SQUARE PUNCHED RAILS WITH NO CABLE OPENINGS, (2) SOLID SIDE PANELS, (1) ZETAFRAME PERFORATED METAL DOOR - GLACIER WHITE, (1) SINGLE-POINT KEYED LOCK, (1) DOUBLE PERFORATED METAL DOOR, (1) THREE-POINT KEYED LOCK, (1) TOP PANEL WITH FOUR BRUSHED-SEALED CABLE OPENINGS, (1) BOTTOM PANEL WITH TWO BRUSHED-SEALED CABLE OPENINGS, (1) AIR DAM KIT, (1) STANDARD DUAL 2-PIECE PDU BRACKET KIT, (1) COMMON PARTS KIT - ZF- UL, (1) PACKAGING KIT.

7 TYPICAL DATA CENTER SERVER CABINET
N.T.S.

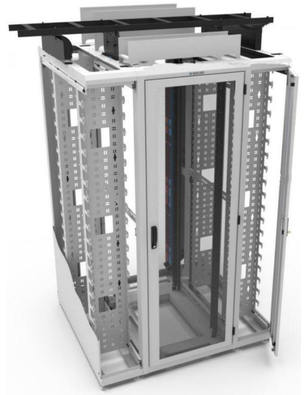

GREAT LAKES CASE AND CABINET ES CABINET - GL840ES-2442-W-MSS OR EQUIVALENT.
84"H X 24"W X 42"D, 44 RU, 40" USEABLE DEPTH, 35" MAX RAIL SPACING, 300LB WEIGHT CAPACITY, WINTER CHITE COLOR.
INCLUDES: FRAME WITH LEVELERS (2.5"H) AND (2) PAIRS OF PDU BRACKES, MESH CONTOUR FRONT DOOR, SPLIT MESH REAR DOOR, SOLID (2) SIDE PANEL, 3/8" SQUARE (M6) MOUNTING RAILS WITH RACK MOUNT HARDWARE, SOLID TOP PANEL.

GREAT LAKES CABLE MANAGEMENT SIDECAR - SC128442 OR SC68442 OR EQUIVALENT.
84"H X 6"W X 42"D, INCLUDES DEPTH ADJUSTABLE TROUGHS, DUAL-HINGE FRONT AND REAR DOORS, FOR USE WITH ES CABINETS.

8 TYPICAL DATA CENTER NETWORK MDA AND HDA CABINET WITH SIDECARS
N.T.S.

Revisions	Date

CONSULTANT

Above Group
ENGINEERING. DESIGN. CONSULTING.
www.abovegroupinc.com
COA/CA Lic. No. 31120
305 East Dr., Suite H,
Melbourne, Florida 32904
PH: 321.345.9026

ARCHITECT/ENGINEER OF RECORD

RDC◆JPA
ARCHITECTURE
524 Fernwood Drive, Altamonte Springs, Florida 32701 | www.rdcjpa.com | 800.362.1523

STAMP
REGISTERED COMMUNICATIONS DISTRIBUTION DESIGNER
Bicsi
Christopher Van Meter
BICSI ID # 285002
EXPIRES 12-31-28
RCDD

Office of Construction and Facilities Management

VA U.S. Department of Veterans Affairs

Drawing Title: TELECOM - TYPICAL DATA CENTER ELEVATIONS	Phase: BID DOCUMENTS	Project Title: GAINESVILLE DATA CENTER	Project Number: 573-21-106
			Building Number:
Approved: STATION CHIEF - EDWIN BURNETT	FULLY SPRINKLERED	Location: GAINESVILLE, FL	Drawing Number: T-502
		Issue Date: 04.20.2026 / Checked: TDB / Drawn: CVM	

Autodesk Docs://Florida, Gainesville VA/122085_VA Gainesville_Data Ctr_P25_MEP1.rvt
4/17/2026 1:14:03 PM

VA FORM 08 - 6231

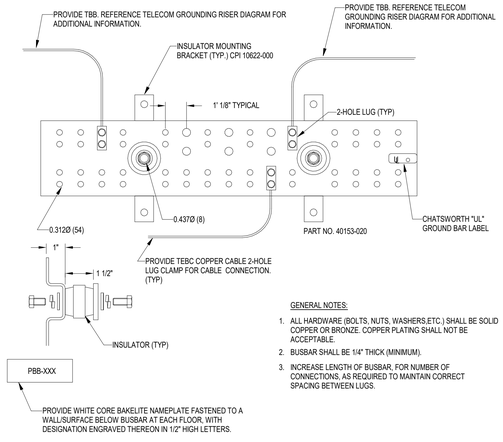

GENERAL NOTES:

1. ALL HARDWARE (BOLTS, NUTS, WASHERS,ETC.) SHALL BE SOLID COPPER OR BRONZE. COPPER PLATING SHALL NOT BE ACCEPTABLE.
2. BUSBAR SHALL BE 1/4" THICK (MINIMUM).
3. INCREASE LENGTH OF BUSBAR, FOR NUMBER OF CONNECTIONS, AS REQUIRED TO MAINTAIN CORRECT SPACING BETWEEN LUGS.

1 GROUND BUS BAR (TYP FOR ALL TR'S)
N.T.S.

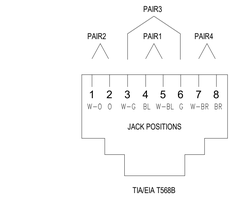

MODULAR JACK WIRING (FRONT VIEW)

5 MODULAR JACK WIRING DETAIL
N.T.S.

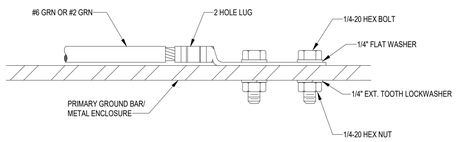

#6 OR #2 GRN TO GROUND BAR OF FLAT SURFACE.
#6 IS USED PRIMARILY AS CABINET TO BUS LINK.

INSTALLATION NOTES:

A. SELECT BOLT LENGTH TO PROVIDE A MINIMUM OF TWO EXPOSED THREADS.
B. BURNISH MOUNTING SURFACE TO REMOVE PAINT IN THE AREA OF LUG CONTACT.
C. APPLY ANTI-OXIDANT COMPOUND TO MATING SURFACE OF LUG AND WIPE CLEAN EXCESS COMPOUND.
D. USE SOLID COPPER WIRE AND MECHANICAL 2-HOLE LUG FOR ALL EXTERIOR GROUNDING.

2 GROUND BAR 2-HOLE LUG TERMINATION
N.T.S.

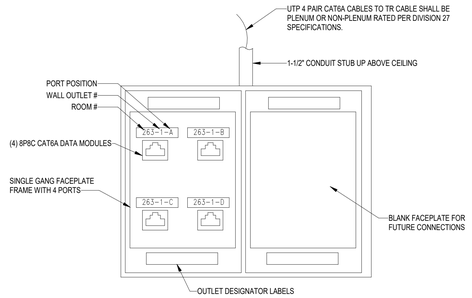

TCO PLAN SYMBOL

NOTES:

1. LABELING STANDARDS SHALL BE FOLLOWED FOR ROOM NUMBER OUTLET IS LOCATED IN. OUTLET POSITION IN ROOM (STARTING ON WALL TO LEFT OF ENTRY DOOR), AND PORT POSITION IN OUTLET - 101-1-A.
2. 8P8C CONNECTIONS IN WALL PLATES SHALL BE COLOR CODED TO MATCH CABLE COLORS INDICATED ON SHEET T-001.
3. WALL BOX SHALL BE DOUBLE-GANG TELECOMMUNICATIONS-RATED WORK BOX WITH RIGID CONDUIT EXTENDING TO THE HORIZONTAL PATHWAY.

6 WALL MOUNTED OUTLET - (TCO) VOICE/DATA
N.T.S.

GENERAL NOTES:

1. BONDING CONDUCTOR SHALL BE NO SMALLER THAN #2 CU.
2. ALL WORK SHALL COMPLY WITH NEC ARTICLE 250, UL 467, ANSI/TIA TIA-607-C, NECA/BICSI 607-2011.
3. PREPARE BUSBAR SURFACE AS DESCRIBED BELOW:
   a. USE AN ABRASIVE PAD, REMOVE ANY DIRT, GREASE, OIL OR OXIDATION THAT IS PRESENT AT THE SURFACE.
   b. APPLY THIN COAT OF AN ANTIOXIDANT TO THE CONNECTION POINT ON THE BUSBAR.
   c. USE STAINLESS STEEL OR SILICON BRONZE HARDWARE. TIGHTEN AND TORQUE TO THE REQUIREMENTS OF THE HARDWARE MATERIAL, SIZE AND GRADE.
4. CONDUCTORS SHALL BE COPPER.
5. LUGS SHALL BE 2-HOLE TYPE WITH INSPECTION WINDOW, LONG BARREL, IRREVERSIBLE (COMPRESSION OR EXOTHERMIC WELDING) AND MECHANICAL.
6. REFER TO ELECTRICAL DRAWINGS FOR ADDITIONAL GROUNDING INFORMATION.

PBB: PRIMARY BONDING BUSBAR
SBB: SECONDARY BONDING BUSBAR
MSB: MAIN SWITCH BOARD
TBB: TELECOMMUNICATIONS BONDING BACKBONE
TEBC: TELECOMMUNICATIONS EQUIPMENT BONDING CONDUCTOR

(X) NOTES:

1. TBB TO PBB OR SBB.
2. TBB TO ELECTRICAL PANEL.
3. #6 AWG TEBC TO EQUIPMENT RACKS/CABLE TRAY.
4. TWO-HOLE LUG, IRREVERSIBLE.

TBB CONDUCTOR TABLE	
TBB LENGTH (FT)	TBB SIZE (AWG)
<13	6
14-20	4
21-26	3
27-33	2
34-41	1
42-52	1/0
53-66	2/0
67-84	3/0
85-105	4/0
106-125	250 KCMIL
126-150	300 KCMIL
151-175	350 KCMIL
176-250	500 KCMIL
251-300	600 KCMIL
>301	750 KCMIL

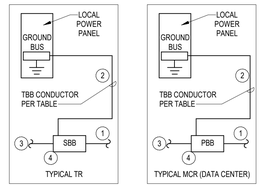

3 TELECOM GROUNDING RISER DIAGRAM
N.T.S.

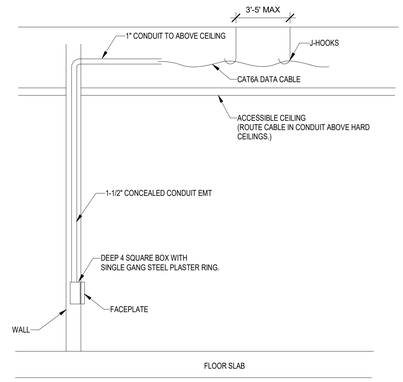

7 TYPICAL FLUSH OUTLET MOUNTING
N.T.S.

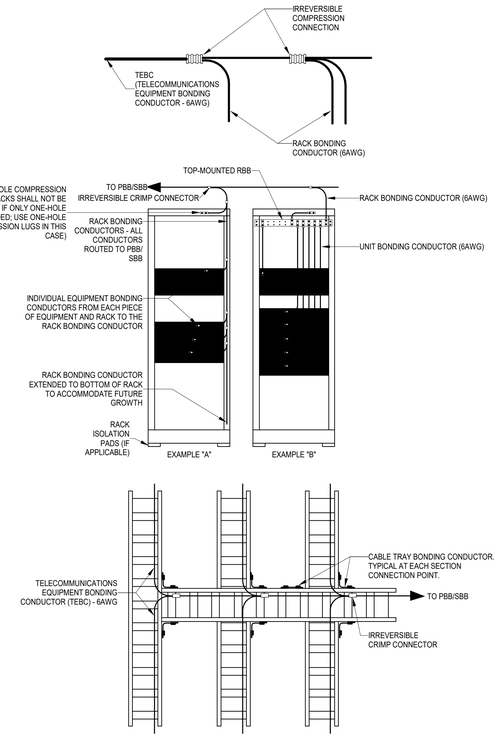

4 PATHWAY, RACK, BONDING CONDUCTOR JOIN REQUIREMENTS
N.T.S.

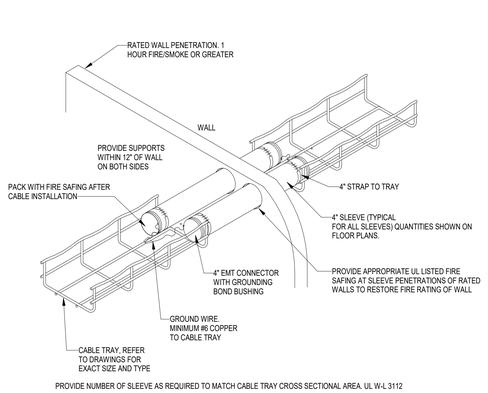

PROVIDE NUMBER OF SLEEVE AS REQUIRED TO MATCH CABLE TRAY CROSS SECTIONAL AREA. UL W-L 3112

8 TYPICAL CABLE TRAY WALL PENETRATION
N.T.S.

NOTE:
1. CABLE TYPE AND SIZE MUST COMPLY WITH ALL ESTABLISHED REQUIREMENTS AND APPLICABLE CODES.
2. ALL CONDUIT SHALL BE 3/4" UNLESS OTHERWISE NOTED.
3. DOOR HARDWARE SHOWN FOR GRAPHICAL INSTRUCTION ONLY, REFERENCE HARDWARE SCHEDULE AS NEEDED FOR ACTUAL HARDWARE SET.

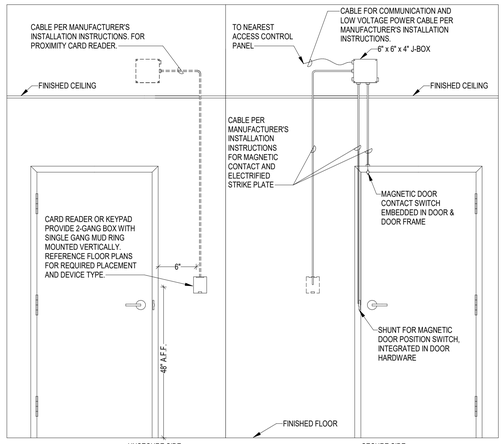

9 SECURITY SINGLE DOOR DETAIL - STRIKE
N.T.S.

NOTE:
1. CABLE TYPE AND SIZE MUST COMPLY WITH ALL ESTABLISHED REQUIREMENTS AND APPLICABLE CODES.
2. ALL CONDUIT SHALL BE 3/4" UNLESS OTHERWISE NOTED.
3. DOOR HARDWARE SHOWN FOR GRAPHICAL INSTRUCTION ONLY, REFERENCE HARDWARE SCHEDULE AS NEEDED FOR ACTUAL HARDWARE SET.

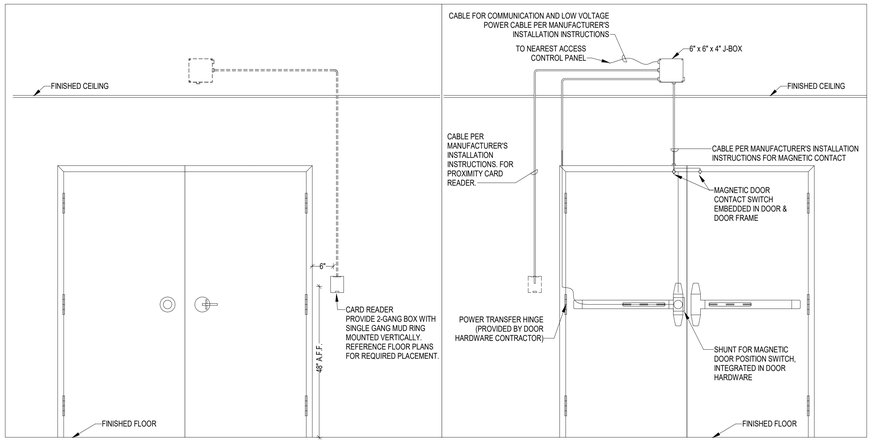

10 SECURITY DOUBLE DOOR DETAIL
N.T.S.

CONSULTANT

Above Group
ENGINEERING. DESIGN. CONSULTING.
www.abovegroupinc.com
COA/CA Lic. No. 31120
305 East Dr., Suite H,
Melbourne, Florida 32904
PH: 321.345.9026

ARCHITECT/ENGINEER OF RECORD

RDC◆JPA ARCHITECTURE
524 Fernwood Drive, Altamonte Springs, Florida 32701 | www.rdcjpa.com | 800.362.1523

STAMP
REGISTERED COMMUNICATIONS DISTRIBUTION DESIGNER
Bicsi
Christopher Van Meter
BICSI ID # 285002
EXPIRES 12-31-28
RCDD

Office of Construction and Facilities Management
VA U.S. Department of Veterans Affairs

Drawing Title	Phase	Project Title	Project Number
TELECOM DATA CENTER DETAILS	BID DOCUMENTS	GAINESVILLE DATA CENTER	573-21-106
			Building Number
Approved: STATION CHIEF - EDWIN BURNETT	FULLY SPRINKLERED	Location GAINESVILLE, FL	Drawing Number T-503
		Issue Date 04.20.2026 / Checked TDB / Drawn CVM	

Revisions	Date

Autodesk Docs://Florida, Gainesville VA/122085_VA Gainesville_Data Ctr_R25_MEP1.rvt
4/17/2026 1:14:04 PM

VA FORM 08 - 6231

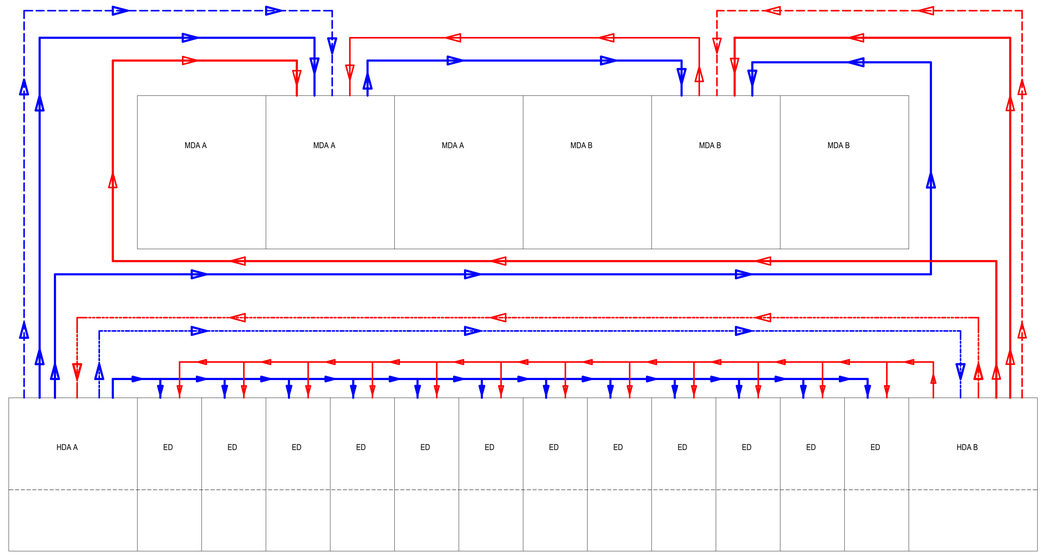

1 DATA CENTER CABLING MAP
N.T.S.

Autodesk Docs://Florida, Gainesville VA\122085_VA Gainesville_Data Ctr_R25_MEPT.rvt
4/17/2026 1:14:06 PM

Revisions	Date

CONSULTANT

Above Group
ENGINEERING. DESIGN. CONSULTING.
www.abovegroupinc.com
COA/CA Lic. No. 31120
305 East Dr., Suite H,
Melbourne, Florida 32904
PH: 321.345.9026

ARCHITECT/ENGINEER OF RECORD

RDC◆JPA
ARCHITECTURE
524 Fernwood Drive, Altamonte Springs, Florida 32701 | www.rdcjpa.com | 800.362.1523

STAMP
REGISTERED COMMUNICATIONS DISTRIBUTION DESIGNER
Bicsi
Christopher Van Meter
BICSI ID # 285002
EXPIRES 12-31-28
RCDD

Office of Construction and Facilities Management
VA U.S. Department of Veterans Affairs

Drawing Title: DATA CENTER CABLING MAP	Phase: BID DOCUMENTS	Project Title: GAINESVILLE DATA CENTER	Project Number: 573-21-106
			Building Number:
Approved: STATION CHIEF - EDWIN BURNETT	FULLY SPRINKLERED	Location: GAINESVILLE, FL	Drawing Number: T-601
		Issue Date: 04.20.2026 / Checked: TDB / Drawn: CVM	

VA FORM 08 - 6231