Statement of Work

Install Pond Liners Ponds 5 & 5.5
Tishomingo NFH
Johnston County, Oklahoma

SECTION 01009 - GENERAL INFORMATION AND REQUIREMENTS

PART 1 - GENERAL

1.1 SUMMARY

A. Description of Work:

1. Reshape existing Pond #5 & #5.5 bottoms using borrow materials obtained off site, if needed.
2. Contractor shall not damage existing kettles.
3. Install underdrain trench and perforated PVC drain pipe with discharge to sump as shown on plans
3. Furnish and install geotextile fabric on side slopes in Ponds #5 & #5.5
4. Furnish and install new geomembrane pond lining in Ponds #5 & #5.5.

B. Location: Approximately 10 miles north of Tishomingo, Oklahoma, on the Tishomingo National Fish Hatchery.

C. Period of Performance: October 1, 2026 - February 28, 2027

1.2 REFERENCES

A. Referenced Specifications/Standards with Abbreviations and/or Acronyms: Wherever the following acronyms are used in these specifications or on the drawings, they are to be construed the same as the respective expressions represented. Copies of the referenced specifications/standards referred to herein may be procured by the Contractor, from the following:

ACI American Concrete Institute
P.O. Box 19150
Detroit, MI 48219

ASTM American Society for Testing and Materials
100 Barr Harbor Dr.
West Conshohocken PA 19428-2959

EPA Environmental Protection Agency
401 M St., SW
Washington, DC 20460

OSHA Occupational Safety and Health Administration
US Department of Labor
200 Constitution Ave., NW
Washington DC 20210

AASHTO American Association of State Highway and Transportation Officials
444 North Capitol Street, N.W., Suite 249

Washington, DC 20001

1.3 DEFINITIONS

A. Approvals: Approval of the submittals is an indication that the Contractor's submittals have been reviewed and that there are no objections, except as noted. Approval of deviations shall apply only to those deviations or omissions from the requirements of the drawings and specifications brought to the Contracting Officer's attention in writing. After approval of an item, submit a substitute for approval when the approved item cannot be purchased or delivered in time to avoid delay in completion of the project. Approval of submittals does not relieve the Contractor of errors, omissions, or from complying with the Contract's requirements.

1.4 SUBMITTALS

A. Scope: Submittals manufacturer's literature, testing reports, and samples.

B. Requirements: Refer to specifications for submittals required. Allow at least 10 working days for review. Submittals shall delivered electronically to the Contracting Officer's Representative for approval.

C. The Contractor shall review and approve all submittals required under the Contract. The Contractor shall submit 3 copies of drawings, schedules, brochures, catalogs, and other data required for the work before proceeding with the work. Submittals that do not indicate the Contractor's review and approval will be returned without review. Submittals shall come directly from the Contractor with their stamp and signature of approval; submittals will not be accepted from sub-contractors or suppliers. The Government will require 7 working days for review of each submittal, plus transmittal time back and forth. Required submittals are listed in the section of work for which the submittal is required.

D. As-built Drawings: Upon completion of the work, the Contractor shall furnish one set of "as built" drawings. These drawings shall be contract drawings corrected in red ink to show any differences between contract drawings and actual construction. All changes made during construction shall be noted. Provide sketches and details where necessary to more fully describe the work performed. Each drawing showing changes in dimensions, details, or containing supplemental information shall be plainly marked "As Built" and shall contain the signature of both the Government Project Inspector and the Contractor.

E. Identification of Submittals: Completely identify each submittal by showing at least the following information:

1. Name and address of submitter, plus name and telephone number of the individual to contact for further information.
2. Name of project as it appears in these specifications.
3. Contract number, drawing number, and specification section number to which the submittal applies.
4. Whether this is an original submittal or re-submittal.
5. Each item shall clearly note the manufacturer's name and address, trade name, product, lot, style, color, catalog designation or model number, and locations of use.

1.5 QUALITY ASSURANCE

A. Codes and Standards: The work shall comply with codes and standards applicable to each type of

work and as listed in the individual sections of these specifications. This Contract incorporates materials, applications, and tests by reference, with the same force and effect as if they were given in full text. Contractor is responsible for quality control and testing as set forth in the individual sections of these specifications.

B. Conflict: Where a conflict occurs between reference documents and project specifications, the project specifications shall govern.

C. Measurements: Where approved manufacturer's diagrams and shop drawings give specific measurements or rough-in dimensions for equipment, these dimensions shall take precedence over dimensions indicated on the drawings.

1.6 DELIVERY, STORAGE, AND HANDLING

A. Delivery: Protect products incorporated into the work from damage while in transit to the site. Products must be delivered in original unopened containers with manufacturer's name, brand designation, and contents legibly indicated.

B. Storage: Provide temporary storage facilities for products. Storage shall comply with the manufacturer's instructions. The storage area shall permit access for inspection and handling.

C. Handling: Load and unload products protecting them from damage.

1.7 PROJECT CONDITIONS

A. Access to the Work: The Contractor shall coordinate the use of the premises with the Contracting Officer and Hatchery Manager to avoid interruption of station operations. The Contractor is responsible for protection and safekeeping of the site and all furnished or constructed items until final acceptance by the Government. The Contractor may use existing roads for access to the site. The Contractor shall maintain existing roads and access ways affected by the Contractor’s operations. Any damage done by the Contractor’s operations shall be repaired or restored at the Contractor's expense.

B. Housekeeping: Routinely, or upon notice by the Government, the Contractor shall clean up and remove from the job site all waste, debris, equipment and surplus material resulting from operations. In the event he fails to complete the requested clean-up of any specific area within seven calendar days following notification, the Government may cause this work to be performed at the Contractor’s expense.

C. Staging Areas: All operations of the Contractor, including storage of materials, on Government premises shall be confined to areas authorized or approved by the Government. Government premises adjacent to the construction area may be made available for use by the Contractor without cost whenever such use will not interfere with other Government uses or purposes. Areas used for staging shall be delineated by the Hatchery Manager prior to commencement of work.

D. Availability of Utilities: Power and potable water for construction is not available at the site. The Contractor shall make all arrangements to provide power and water if needed for its operations. Non-potable water is available at no charge from various natural sources near the site. The Contractor shall make all arrangements to provide non-potable water from these sources. Access to lakes and canals for non-potable water shall be coordinated with the Government and is subject to the approval of the Contracting Officer.

E. Contractor must supply their own portable toilet facilities as there are no facilities available.

F. This is a NON SMOKING facility. Contractor personnel are not allowed to smoke outside on Hatchery property. Smoking is only allowed in contractor's personal vehicles and all trash generated from such activities must be removed from Hatchery grounds.

1.8 SEQUENCING AND SCHEDULING

A. Work Schedule: The schedule shall be submitted at the pre-work conference. When requested, submit an updated schedule within 3 calendar days. As a minimum, the estimated start and completion dates shall be shown in the estimate.

B. The Contractor's normal work schedule shall be 6:30 a.m. to 4:00 p.m., Monday through Friday. No work shall be performed on Saturdays, Sundays, or federal holidays, unless authorized in writing by the Contracting Officer.

1.9 SAFETY

A. The Contractor shall comply with all applicable safety codes and regulations including but not limited to Occupational Safety and Health Administration regulations, 29 CFR, Part 1926. The Contractor shall perform his operations so as to ensure safety of his workers, the public, and Government personnel.

PART 2 - PRODUCTS

(There are no applicable requirements.)

PART 3 - EXECUTION

3.1 PROJECT MEETINGS

A. Pre-Work Conference:

1. Will be held prior to the start of work. The Contractor will be notified in advance of meeting time, date and place. The purpose will be to review required work, project drawings and specifications, construction schedules, payroll and payments, and administrative provisions of the Contract.
2. The Contractor, subcontractors, and personnel responsible for coordination of the work shall be present at the meeting.
3. Contractor shall summarize and explain procedures planned for the project.

B. Progress Meetings:

1. Shall be held at the project site, or as determined by the Contracting Officer.
2. May be called by either the Contracting Officer or the Contractor. Request shall state who should attend and include an agenda.

C. Final Inspection:

1. Shall be held at the project site, or as determined by the Contracting Officer.
2. Notify the Contracting Officer in writing at least 10 working days before the completion date to allow the Government to schedule a final inspection.

3.2 DISPOSAL OF DEBRIS

A. Existing additional soil materials not used for construction shall be stockpiled in an area on the station designated by the Hatchery Manager.

B. Requirements: Items or debris not designated as salvage shall be disposed of by the Contractor off station grounds in a legal manner and in accordance with applicable local codes.

3.3 WARRANTY

A. Requirements: Materials and equipment furnished under this Contract shall be covered by the most favorable commercial warranties given to customers for such materials or equipment. The rights or remedies provided herein are in addition to and do not limit rights afforded to the Government by other clauses of this Contract. With respect to warranties, expressed or implied, from manufacturers or suppliers for materials or equipment furnished under the Contract the Contractor shall:

1. Obtain warranties that would be given in normal commercial practices.
2. Require warranties to be executed, in writing, for the benefit of the Government.
3. Submit warranties to the Contracting Officer prior to the final inspection.

PART 4 - MEASUREMENT AND PAYMENT

4.1 MEASUREMENT

A. All items associated with complying with this section will not be measured for payment

4.2 PAYMENT

A. Payment for all work associated with complying with this section shall be included in the prices bid in the schedule for other items of work. No separate payment will be made to the Contractor for work required in this section.

END OF SECTION 01009

SECTION 02300 - EARTHWORK

PART 1 - GENERAL

1.1 SUMMARY

A. Excavation, backfill and grading of sub-grade under membrane lining.

B. Gravel for underdrain system.

1.2 DEFINITIONS

A. Backfill: Soil materials used to fill an excavation.

B. Borrow: Satisfactory soil imported from onsite and offsite borrow areas for use as fill or backfill in pond under membrane lining. Processing of this borrow may be required to remove rocks larger than 2-inches in diameter.

C. Excavation: Removal of material encountered above sub-grade elevations.

1. Additional Excavation: Excavation below sub grade elevations as directed by Contracting Officer. Additional excavation and replacement material will be paid for according to Contract provisions for changes in the Work.
2. Unauthorized Excavation: Excavation below sub grade elevations or beyond indicated dimensions without direction by Contracting Officer. Unauthorized excavation, as well as remedial work directed by Contracting Officer, shall be without additional compensation.

D. Fill: Soil Material used to raise existing grades and backfill eroded south (kettle end) of pond banks

E. Sub-grade: Surface or elevation remaining after completing excavation, or top surface of a fill or backfill immediately below sub-base, drainage fill, or topsoil materials.

PART 2 - PRODUCTS

2.1 SOIL MATERIALS

A. General: The Contractor shall provide borrow soil materials from offsite borrow sources when sufficient satisfactory soil materials are not available from excavations. When sufficient satisfactory material is not available from onsite sources, the Contractor shall furnish any additional material required from offsite sources.

B. Satisfactory Soils for backfilling pond: Contractor shall provide any additional material needed from offsite sources. The material shall be of the same type obtained from excavations. Backfill material shall be free of rock or gravel larger than 2 inches in any dimension, debris, waste, frozen materials, vegetation, and other deleterious matter.

C. Backfill and Fill: Satisfactory soil materials.

D. Gravel Backfill for Underdrain System: Gravel shall conform to ASTM C33 for Grade 57 Aggregate.

PART 3 - EXECUTION

3.1 PREPARATION

A. Protect structures, utilities, sidewalks, pavements, and other facilities from damage caused by settlement, lateral movement, undermining, washout, freezing temperatures or frost, and other hazards created by earthwork operations. Provide protective insulating materials as necessary.

B. Provide erosion-control measures to prevent erosion or displacement of soils and discharge of soil-bearing water runoff or airborne dust to adjacent properties.

C. Prevent surface water and ground water from entering excavations, from ponding on prepared sub-grades, and from flooding Project site and surrounding area.

D. Protect sub-grades from softening, undermining, washout, and damage by rain or water accumulation.

E. Protect existing turnout pipes adjacent to the ponds.

F. Seepage from adjacent ponds may require soils to be dewatered prior to earthwork. This has previously been accomplished with French Drain/sump pits and/or shallow well points.

3.2 EXCAVATION

A. Perform excavation to the lines shown on the drawings or as directed. Blasting will not be permitted. Slope or shore trench excavation in accordance with OSHA regulations for safety where required. Excavate to sub-grade elevations regardless of the character of surface and subsurface conditions encountered, including rock, soil materials, and obstructions.

1. If excavated materials intended for fill and backfill include unsatisfactory soil materials and rock, replace with satisfactory soil materials.

B. Through sections containing rock and where directed through sections of hard and compact material and through sections containing coarse gravel, cobbles, and boulders that cannot be excavated and trimmed efficiently with excavating and trimming machinery, excavate so that there will not be less than 3 inches between any point of the excavated surface and the underside of the structure. Prevent over-breakage outside of the surfaces upon which lining is to be placed. Any such over-breakage and refill thereof shall be at the expense of the Contractor.

C. Proof roll sub grades, before filling or placing aggregate courses, with heavy pneumatic-tired equipment to identify soft pockets and areas of excess yielding. Do not proof roll wet or saturated sub-grades.

D. Reconstruct sub grades damaged by freezing temperatures, frost, rain, accumulated water, or construction activities. Construct embankment fills to dimensions shown on the drawings. Do not place material in embankments when either the material or the surfaces on which the embankment material is to be placed are frozen.

E. Stockpile borrow materials and satisfactory soil materials, without intermixing, in shaped, graded, drained, and covered stockpiles. Stockpile soil materials away from edge of excavations and outside drip line of remaining trees.

F. Excavate unsuitable material from pond surfaces to receive embankment or backfill. Dispose of excavated unsuitable material in the onsite waste area designated by the Hatchery Manager.

3.3 BACKFILLS, FILLS AND COMPACTION

A. Fill: Place and compact fill material in layers to required elevations.

B. Uniformly moisten or aerate sub grade and each subsequent fill or backfill layer before compaction to within 2 percent of optimum moisture content.

1. Remove and replace, or scarify and air dry, otherwise satisfactory soil material that exceeds optimum moisture content by 2 percent and is too wet to compact to specified dry unit weight.

C. Construct pond embankments to dimensions shown on the drawings. Do not place material in embankments when either the material or the surfaces on which the material is to be placed are frozen.

D. Compaction: Place backfill and fill materials in layers not more than 12 inches in loose depth for material compacted by heavy compaction equipment, and not more than 4 inches in loose depth for material compacted by hand-operated tampers.

E. Compact soil to not less than the following percentages of maximum dry unit weight according to ASTM D 698:

1. Under structures, scarify and re-compact top 12 inches of existing sub-grade and each layer of backfill or fill material at 90 percent.

2. Where cohesionless soils are to be compacted, compact to a minimum relative density of 70 percent according to ASTM D 4253 or D 4254.

F. Grading: Uniformly grade areas to a smooth surface, free from irregular surface changes. Comply with compaction requirements and grade to cross sections, lines, and elevations indicated. Grade unpaved sub-grades to tolerances of plus or minus 1 inch.

G. Trim and finish earth surfaces of the pond invert and sidewalls to provide a firm foundation for the membrane lining. Final trimming operations shall not precede the placement of lining by a time of more than 48 hours. The bottom and side slopes, including the surfaces of the compacted embankment and compacted backfill, over which lining is to be placed, shall be finished accurately to the dimensions shown on the drawings. If at any point the foundation material is disturbed or loosened during the excavation process or otherwise, it shall be moistened, if required, and thoroughly compacted by tamping, rolling, or other approved methods to form firm foundations upon which to place lining.

3.4 GRAVEL BEDDING

A. In Underdrain trench, place gravel bedding on prepared subgrade and as follows:

1. Place gravel bedding to required cross sections and thickness. Care shall be taken not to crush the perforated PVC pipe.

3.5 FIELD QUALITY CONTROL

A. Testing Agency: Contractor will engage, at its expense, a qualified independent testing and inspecting agency to perform field tests and inspections and to prepare test reports. All testing results shall be submitted to the Contracting Officer, for review and acceptance, a minimum of 48 hours after completion of test.

B. Allow testing agency to test and inspect sub grades and each fill or backfill layer. Proceed with subsequent earthwork only after test results for previously completed work comply with

C. A minimum of three (3) tests at random locations in each pond to ensure adequate compaction.

D. When testing agency reports that sub grades, fills, or backfills have not achieved degree of compaction specified, scarify and moisten or aerate, or remove and replace soil to depth required; re-compact and retest until specified compaction is obtained.

3.6 PROTECTION AND DISPOSAL

A. Protect newly graded areas from traffic, freezing, and erosion. Keep free of trash and debris.

B. Repair and reestablish grades to specified tolerances where completed or partially completed surfaces become eroded, rutted, settled, or where they lose compaction.

C. Disposal: Remove surplus satisfactory soil and waste material, including unsatisfactory soil and place in a site designated on station by the Hatchery Manager. Remove trash, and other debris, and legally dispose of it off Government property. The removed debris shall be disposed of in an approved area off site. Contractor to remove any personnel generated trash and refuse and legally dispose offsite.

PART 4 - MEASUREMENT AND PAYMENT

4.1 MEASUREMENT

A. Measurement for Excavation for pond lining shall not be made.

B. Measurement for Compacted Backfill for pond lining shall not be made.

C. Measurement for Installing or Removing Dewatering System shall not be made. Measurement shall consist of the material quantity as shown in the bid schedule.

D. All other items associated with complying with this section will not be measured for payment.

4.2 PAYMENT

A. Payment for Excavation for pond lining shall be included in the prices bid in the schedule for other items of work.

B. Payment for Compacted Backfill for pond lining shall be included in the prices bid in the schedule for other items of work.

C. Payment for Installing and Removing the Dewatering System shall be at the unit price per each bid in the schedule for "Install/Remove Dewatering System in Pond ___", which unit price shall include the cost of all work associated therewith.

D. All other costs of complying with this section shall be included in the prices bid in the schedule for other items of work. No separate payment will be made to the Contractor for work other than that described above.

END OF SECTION 02300

SECTION 02666 - POND RESERVOIR LINERS

PART 1 - GENERAL

1.1 SUMMARY

A. This Section includes:
   a. Impermeable geomembrane pond liners.
   b. Geotextile material used on slopes under pond liner and in underdrain system.
   c. Underdrain materials.

1.2 SUBMITTALS

A. Product Data: For each type of geomembrane and secondary or accessory product indicated, submit product data. For the underdrain system, submit product data for the perforated pipe and geotextile fabric. All product data shall be submitted to the Contracting Officer's Representative, for review and acceptance, a minimum of 7 working days, plus transmittal time back and forth, prior to installation.

B. Shop Drawings: Include details of installation, panel layout, seams, penetrations, perimeter anchorage, and methods of sealing to other construction. Differentiate between factory and field seams and joints. All shop drawings shall be submitted to the Contracting Officer, for review and acceptance, a minimum of 7 working days, plus transmittal time back and forth, prior to installation.

C. Samples: For each geomembrane, not less than one 12-inch seam length of factory-bonded sheets and one 12-inch seam length of field-bonded sheets. All samples shall be submitted to the Contracting Officer's Representative, for review and acceptance, a minimum of 7 working days, plus transmittal time back and forth, prior to installation.

D. Product test reports. All test reports shall be submitted to the Contracting Officer's Representative, for review and acceptance, a minimum of 7 working days, plus transmittal time back and forth, prior to installation.

E. Maintenance data. All maintenance data shall be submitted to the Contracting Officer's Representative, for review and acceptance, a minimum of 7 working days, plus transmittal time back and forth, prior to installation.

1.3 QUALITY ASSURANCE

A. Installer Qualifications: Installer shall be the manufacturer or approved by manufacturer to install manufacturer's products. Installation shall be performed under the constant direction of a single Field Installation Supervisor who shall remain on site and be in responsible charge, throughout the liner installation - for liner layout, seaming, patching, testing, repairs, and all other activities by the Contractor. This Installation Supervisor shall have installed and/or supervised the installation and seaming of a minimum of 5,000,000 square feet of flexible membrane liner. Actual seaming shall be performed under the direction of an experienced joiner (who may also be

the Installation Supervisor) who has joined a minimum of 2,000,000 square feet of flexible membrane liner, using the same type of flexible membrane liner joining method specified in the current Work. This Installation Supervisor shall be present whenever seaming is performed.

B. Pre-installation Conference: Conduct conference at Project site prior to installation of products.

1.4 WARRANTY

A. Special Warranty: Manufacturer's standard form agreeing in which Installer agrees to repair or replace geomembranes that leak or otherwise fail in materials and workmanship within 2 years from date of Substantial Completion. Warranty does not include deterioration or failure due to exposure to harmful chemicals, gases or vapors, abnormal and severe weather phenomena, fire, earthquakes, floods, vandalism, or abuse by persons, animals, or equipment.

PART 2 - PRODUCTS

2.1 LINERS

A. Available Manufacturers: Subject to compliance with requirements, manufacturers offering products that may be incorporated into the Work include, but are not limited to, the following:

1. Burke Environmental Products; CW Neal Corporation
2. CMS Industries, Inc.
3. Environmental Protection, Inc.
4. Fabrico Environmental Liners, Inc.
5. GSE Lining Technology, Inc.; Division of Gundle/SLT Environmental Systems, Inc.
6. Integra Plastics, Inc.
7. Manhattan Environmental, Inc.
8. Plastic Fusion Fabricators, Inc.
9. Poly-Flex, Inc.
10. Reef Industries, Inc.
11. Serrot Corp.
12. Watersaver Company, Inc.

B. PE Sheet: Virgin polyethylene compounded for use in hydraulic structures, formed into uniform, flexible sheets.

1. Nominal Density: High density, 0.940 to 0.959 g/cu. cm. per ASTM D 1505
2. Nominal Thickness: 60 mils per ASTM D 751.
3. Melt Flow Index: Not more than 0.035 oz./10 minutes per ASTM D 1238, Condition 190/2.16.
4. Carbon Black Content: 2 to 3 percent per ASTM D 1603.
5. Carbon Black Dispersion: A1, A2, or B1 per ASTM D 3015, as modified by NSF 54, Annex A.
6. Tensile Properties: Not less than indicated for each direction, per ASTM D 638, as modified by NSF 54, Annex A.

a. Strength at Yield: 126 lbf/in.
b. Strength at Break: 90 lbf/in.
c. Elongation at Yield: 12 percent
d. Elongation at Break: 100 percent

7. Dimensional Stability, Reinforced Sheet: Not more than plus or minus 1 percent per ASTM 1204
8. Tearing resistance: Not less than 39 lbf per ASTM D 1004, Procedure B.
9. Puncture Resistance: Not less than 72 lbf per ASTM D 4833.
10. Low-temperature Brittleness: 4 hours at minus 94 deg F per ASTM D 746.
11 Environmental Stress Cracking Resistance: Not less than 200 hours per ASTM D 5397, Condition B.
12. Sheet Texture: One side smooth; other side **textured**. Texture shall be integral to sheet and coatings added after the manufacturing process will not be accepted.

2.2 MISCELLANEOUS MATERIALS

A. Adhesives: Compounds, solvents, and tapes recommended in writing by liner manufacturer for bonding to structures (if required), for sealing of seams in geomembrane, and for sealing projections through liner.

B. Penetration Assemblies: Manufacturer's standard factory-fabricated assemblies for sealing penetrations. Include joint sealant, recommended in writing by liner manufacturer, compatible with geomembrane and containment conditions and materials.

C. Battens: Long-length strips in sizes indicated, fabricated with sharp projections removed, and edges eased and pre-drilled or punched for anchors. Provide anchors, or other type of attachment, of type and spacing recommended in writing by liner manufacturer for attaching geomembrane liner system to substrate and as indicated.

1. Material: Liner manufacturer's standard system

2.3 UNDERDRAIN SYSTEM

A. PVC Pipe: Perforated pipe shall be 6” in diameter and shall be schedule 40. PVC pipe with a wall thickness classification of SDR-35 meeting ASTM standard D3034 is an acceptable substitution for PVC Schedule 40 pipe.

B. Geotextile Fabric: Geotextile shall be Class "C" or better. A partial list of non-woven filter fabrics that meet the Class "C" criteria is contained below. Any alternative filter fabric must be approved by the Contracting Officer.

1. Mirafi 180-N
2. Amoco 4552
3. WEBTEC N70
4. GEOLON N70

5. Carthage FX-80S

C. Backfill Aggregate: Refer to Section 2300 for Gravel Backfill for Underdrain System.

2.4 FABRICATION

A. Fabricate geomembrane liner panels from sheets in sizes as large as possible with factory-sealed seams, consistent with limitations of weight and installation procedures. Minimize field seaming.

PART 3 - EXECUTION

3.1 INSTALLATION

A. Examine substrates, with installer present, to verify absence of sharp projections and voids; for compliance with requirements for soil compaction and grading; for subgrade free from angular rocks, rubble, roots, vegetation, debris, voids, protrusions, and ground water; and for other conditions affecting performance of liner. Proceed with installation only after unsatisfactory conditions have been corrected.

B. Install geotextile material on prepared pond side slopes as shown on plans prior to installing geo-membrane liners. Overlap and attach each edge of geotextile sheets using manufacturer's standard detail.

C. Preparation:

1. Provide temporary ballast that does not damage geomembrane liner or substrate, to prevent uplift of liner in areas with prevailing winds, until edges are permanently secured.
2. Prepare surfaces of construction penetrating through liner according to liner manufacturer's written instructions.

D. Place geomembrane liner over prepared surfaces to ensure minimum handling. In areas with prevailing winds, begin placing liner at Project's upwind direction and proceed downwind. Install liner in a relaxed condition, free from stress and tension. Fit closely and seal around inlets, outlets, and other projections through geomembrane liner. Permanently secure edges.

E. Anchor Trenches: Anchor Trenches shall be straight and uniform. Contractor shall install string line during trench excavation. Trenches shall not deviate more than 1.5" from offset established by string line. Trench edges shall be sharp and uniform and any edges that have sloughed will not be accepted.

F. Attachment to Concrete: Use manufacturer's standard system to suit Project conditions. Support adhesive and geomembrane on minimum 8-inch wide concrete substrate unless otherwise indicated.

1. Install batten strips over geomembrane liner as shown on Drawings.

G. Proceed with installation only when existing and forecasted weather conditions permit placement and seaming of geomembrane to be performed according to manufacturers' written instructions and warranty requirements. Do not place or seam geomembrane during conditions of precipitation, excessive atmospheric moisture, blowing dust, strong wind, or at temperatures outside manufacturers' recommended range.

H. Prepare surfaces of construction penetrating through liner according to liner manufacturer’s written instructions. Remove curing compounds and coatings from concrete surfaces to be sealed to membrane liner.

I. Field Seams: Comply with liner manufacturer's written instructions. Form lapped seams by lapping edges of panels 5 inches, unless instructions require a larger overlap. Wipe contact surfaces clean and free of dirt, dust, moisture, and other foreign materials. Use solvent-cleaning methods and grind geomembrane seam surfaces if recommended by liner manufacturer. Proceed with seaming at required temperatures for materials and ambient conditions. Continuously bond sheet to sheet to construct single or double seams of width recommended for method of seaming used. Seal or fuse free seam edges as instructed. Inspect seams and reseal voids.

J. Before initial filling of ponds, placement of earth or other cover, inspect seams and patched areas to ensure tight, continuously bonded installation. Repair damaged membrane and seams and re-inspect repaired work.

K. Liner Repairs: Repair tears, punctures, and other imperfections in liner field and seams using patches of liner material, liner-to-liner bonding materials, and bonding methods according to liner manufacturer's written instructions. Apply bonding solvent or weld to contact surfaces of both patch and liner and press together immediately. Roll to remove wrinkles.

L. Underdrain Installation: Excavate trench to lines shown on drawings. Place geotextile fabric in trench prior to installing perforated pipe and gravel The width of the geotextile fabric must include sufficient material to conform to trench perimeter irregularities and for a 6-inch minimum top overlap. The geotextile fabric shall completely line trench. Stones or other anchoring objects should be placed on the fabric at the edge of the trench to keep the trench open during windy periods during backfilling operations. When overlaps are required between rolls, the uphill roll should lap a minimum of 2 feet over the downhill roll in order to provide a shingled effect.

3.2 FIELD QUALITY CONTROL

A. Nondestructive Testing: Visually inspect all seams and patches. Comply with ASTM D 4437 for Air Lance Test, Vacuum Box Testing, or Ultrasonic (High Frequency) Pulse Echo Testing or with GRI Test Method GM6, as applicable to geomembrane and seam construction. Record locations of failed seams and patches. For the record, individually number and date occurrences and details of leak and remedial action. Repair leaking seams and patches.

PART 4 - MEASUREMENT AND PAYMENT

4.1 MEASUREMENT

A. Measurement or Regrading and Reshaping of ponds shall not be made. Measurement shall consist of the material quantity as shown in the bid schedule.

B. Measurement for the Underdrain System shall not be made. Measurement shall consist of the material quantity as shown in the bid schedule.

C. Measurement for Geotextile Fabric installed shall not be made. Measurement shall consist of the material quantity as shown in the bid schedule.

D. Measurement for High Density Polyethylene liner installed shall not be made. Measurement shall consist of the material quantity as shown in the bid schedule.

4.2 PAYMENT

A. Payment for Regrading and Reshaping of ponds shall be at the unit price per square yard bid in the schedule for “Regrade/Reshape Pond #4 & #14”, which unit price shall include the cost of all work associated therewith.

B. Payment for the Underdrain System shall be at the unit price per linear foot bid in the schedule for “Install Underdrain System in Pond #4 & #8”, which unit price shall include the cost of all work associated therewith.

C. Payment for Geotextile Fabric installed shall be at the unit price per square yard bid in the schedule for “Furnish and Install Pond #4 & #8 Geotextile Underlayment Complete in Place (CIP)”, which unit price shall include the cost of all work associated therewith.

D. Payment for High Density Polyethylene liner installed shall be at the unit price per square yard bid in the schedule for “Furnish and Install Pond #4 & #8 Geomembrane Liner Complete in Place (CIP)”, which unit price shall include the cost of all work associated therewith.

END OF SECTION 02666

UNITED STATES DEPARTMENT OF THE INTERIOR

U. S. FISH & WILDLIFE SERVICE

TISHOMINGO NATIONAL FISH HATCHERY

JOHNSTON COUNTY OKLAHOMA

2024-REPLACE POND LINER

ASSET NO's: 10006384 (POND

AutoCAD SHX Text

AutoCAD SHX Text

AutoCAD SHX Text

-U.

DRAWING INDEX

No.	DRAWING TITLE
1	MAPS & INDEX OF DRAWINGS
2	POND #5 SITE PLAN & DETAILS
3	POND #5.5 SITE PLAN & DETAILS
4	POND DETAILS, DIMENSIONS AND SECTIONS
5	POND LINER DETAILS
6	BATTEN BAR LAYOUT @ EXISTING KETTLE

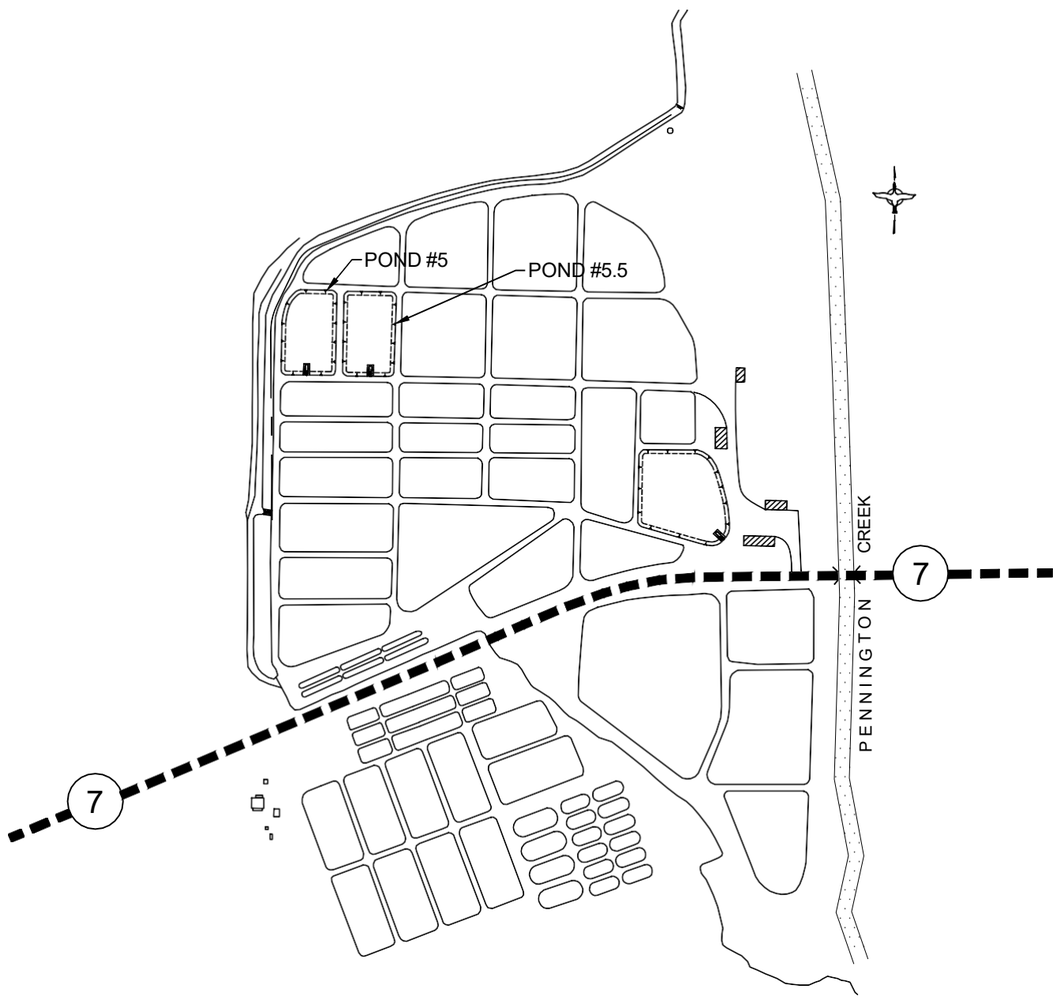

HATCHERY SITE PLAN

NOT TO SCALE

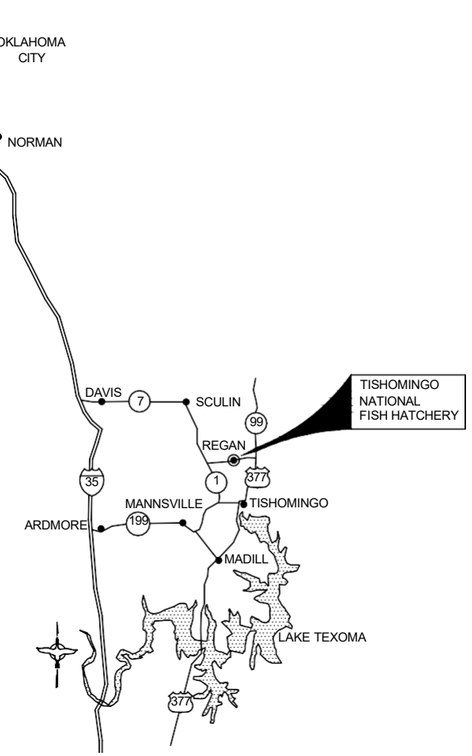

VICINITY MAP

NOT TO SCALE

UNITED STATES DEPARTMENT OF THE INTERIOR

U.S. FISH AND WILDLIFE SERVICE

DIVISION OF ENGINEERING

TISHOMINGO NATIONAL FISH HATCHERY

JOHNSTON COUNTY OKLAHOMA

POND LINERS #5 & #5.5

COVER SHEET

MAPS & INDEX TO DRAWINGS

DESIGN: RAYNER	DRAWN: RAYNER	CHECK: RS
DRAWING FILENAME AND NUMBER		DATE: 5/6/26
POND LINER		SHT. NO. 1 / SEQ. NO. 1 OF 6

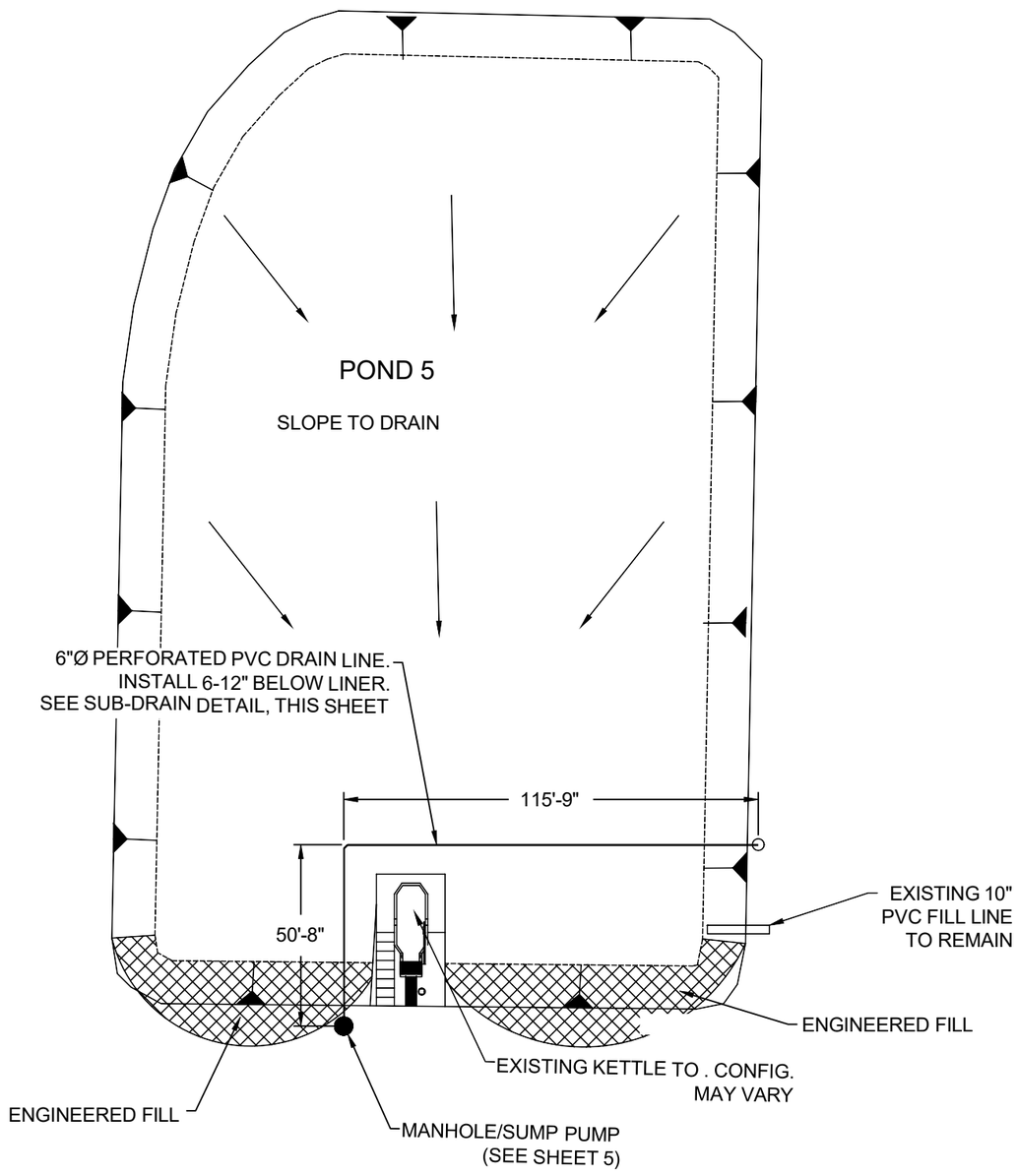

ENLARGED POND #5 SITE PLAN

SCALE = 1" = 500'

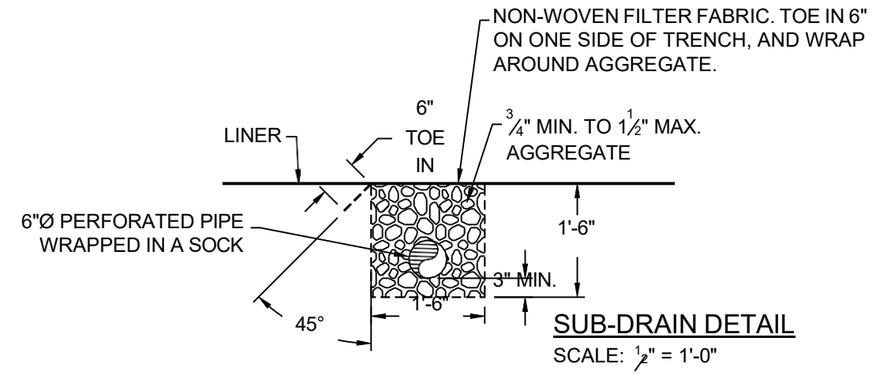

SUB-DRAIN DETAIL

SCALE: 1/2" = 1'-0"

UNITED STATES DEPARTMENT OF THE INTERIOR

U.S. FISH AND WILDLIFE SERVICE

DIVISION OF ENGINEERING

TISHOMINGO NATIONAL FISH HATCHERY

JOHNSTON COUNTY — OKLAHOMA

POND LINERS #5 & #5.5

POND #5 SITE PLAN & DETAILS

CIVIL

DESIGN: RAYNER	DRAWN: RAYNER	CHECK: RS
DRAWING FILENAME AND NUMBER		DATE: 5/6/26
POND LINER		SHT. NO. 2 / SEQ. NO. 2 OF 6

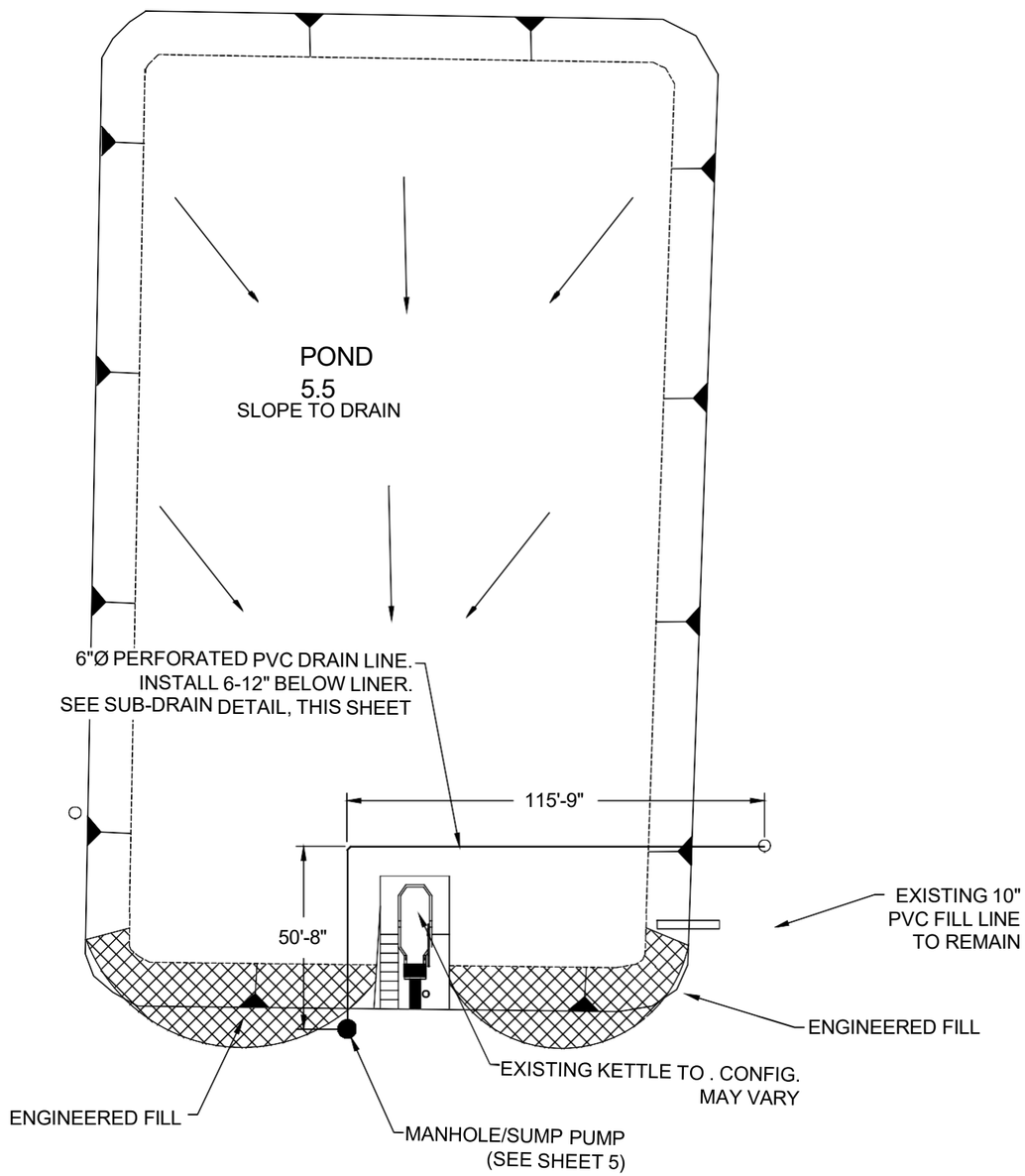

ENLARGED POND #5.5 SITE PLAN

SCALE = 1" = 500'

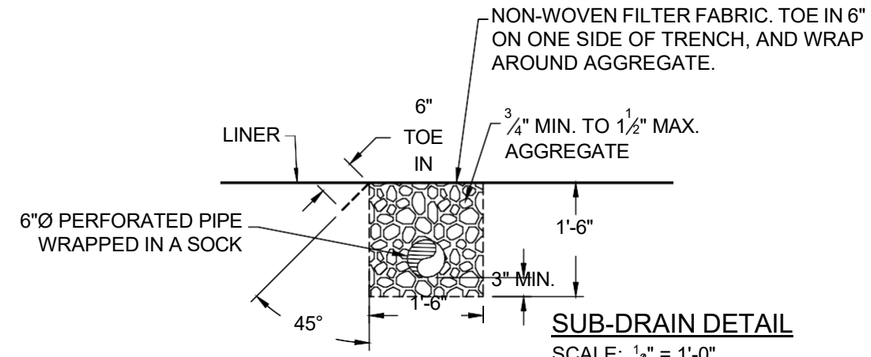

SUB-DRAIN DETAIL

SCALE: ½" = 1'-0"

UNITED STATES DEPARTMENT OF THE INTERIOR

U.S. FISH AND WILDLIFE SERVICE

DIVISION OF ENGINEERING

TISHOMINGO NATIONAL FISH HATCHERY

JOHNSTON COUNTY — OKLAHOMA

POND LINERS #5 & #5.5

POND #5.5 SITE PLAN & DETAILS

CIVIL

DESIGN: RAYNER	DRAWN: RAYNER	CHECK: RS
DRAWING FILENAME AND NUMBER		DATE: 5/6/26
POND LINER		SHT. NO. 3 / SEQ. NO. 3 OF 6

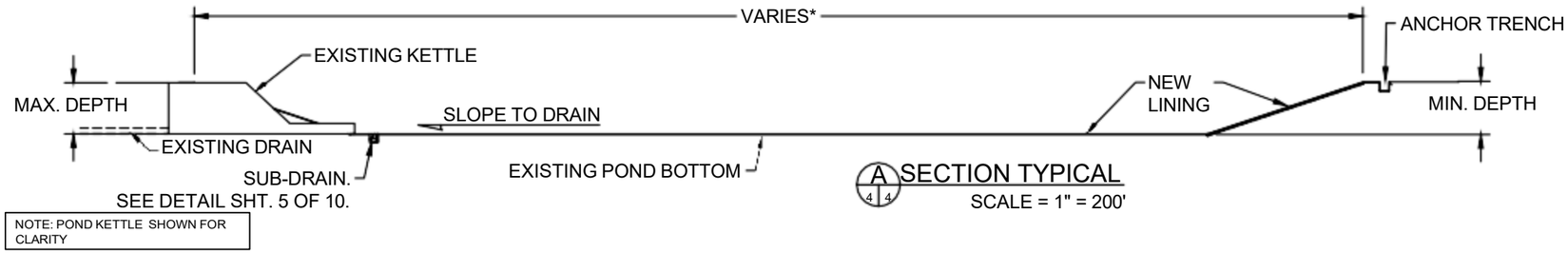

A 4 4 SECTION TYPICAL
SCALE = 1" = 200'

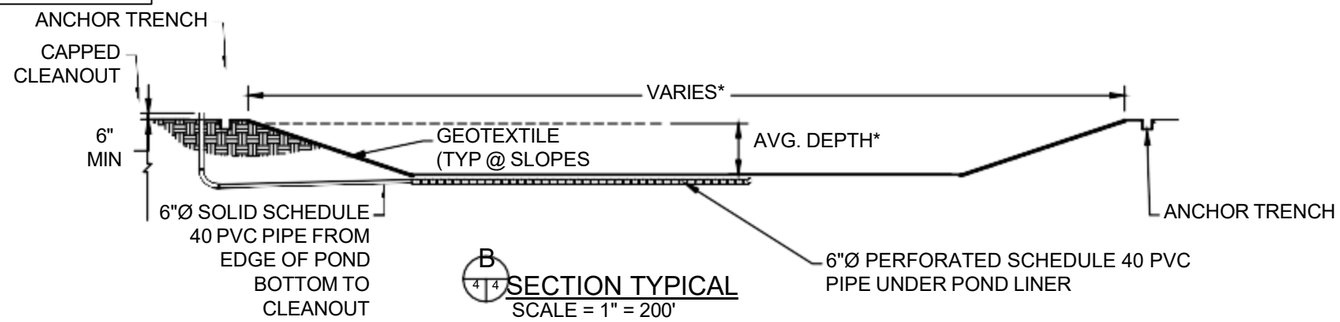

B 4 4 SECTION TYPICAL
SCALE = 1" = 200'

DIMENSION DATA FOR POND							
POND No.	LENGTH (FT)	WIDTH (FT)	SURFACE ACRES*	DEPTH (FT)			VOLUME (ACRE FEET)
				MAX.	MIN.	AVG.	
5	VARIES	VARIES	1.0	5	1	5	5.0
5.5	VARIES	VARIES	1.16	5	1	5	5.8

* HORIZONTAL PLANE ONLY. DOES NOT INCLUDE ALLOWANCES FOR SLOPES.

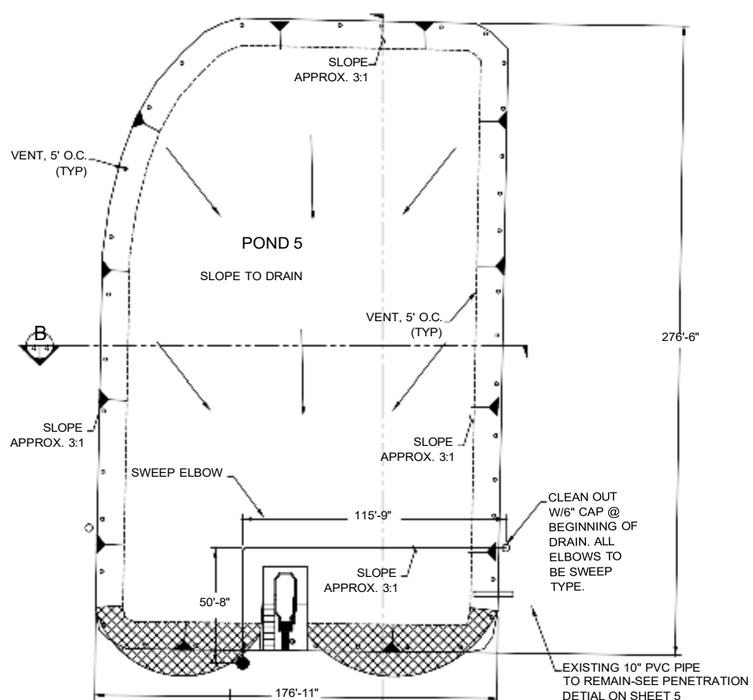

POND #5 PLAN
N.T.S.

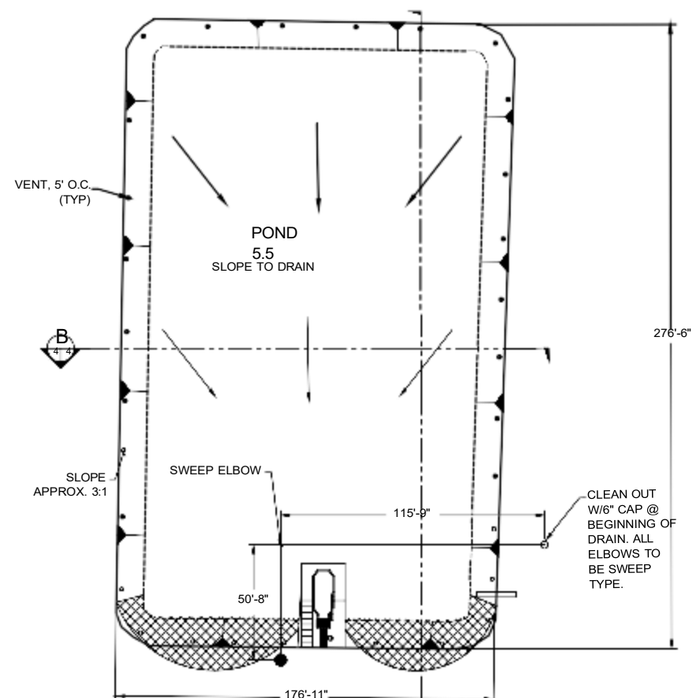

POND #5.5 PLAN
N.T.S.

NOTES:

1. MEASUREMENTS ARE SQUARE; ACTUAL PONDS ARE ROUNDED AT CORNERS.
2. DUE TO THE IRREGULAR SHAPE OF THE POND, ALL MEASUREMENTS SHALL BE FIELD VERIFIED
3. DIMENSIONS ARE MEASURED TO TOP OF BERM.
4. DIMENSIONS ARE APPROXIMATE, BUT GENEROUS.
5. CONTRACTOR SHALL ENSURE NO FOLDS, IRREGULARITIES, OR PONDING OF WATER AT POND LINING TO KETTLE ATTACHMENTS.

UNITED STATES DEPARTMENT OF THE INTERIOR
U.S. FISH AND WILDLIFE SERVICE
DIVISION OF ENGINEERING
TISHOMINGO NATIONAL FISH HATCHERY
JOHNSTON COUNTY OKLAHOMA

POND LINERS #5 & #5.5
POND DETAILS, DIMENSIONS & TYPICAL POND SECTIONS
CIVIL

DESIGN: RAYNER	DRAWN: RAYNER	CHECK: RS
DRAWING FILENAME AND NUMBER		DATE: 5/6/26
POND LINER		SHT. NO. 4 / SEQ. NO. 4 OF 6

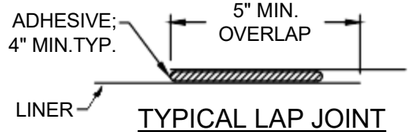

TYPICAL LAP JOINT

SCALE = 3" = 1'-0"

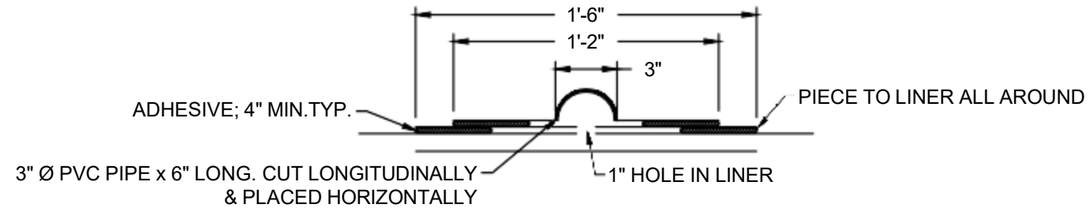

VENT DETAIL

SCALE = 1½" = 1'-0"

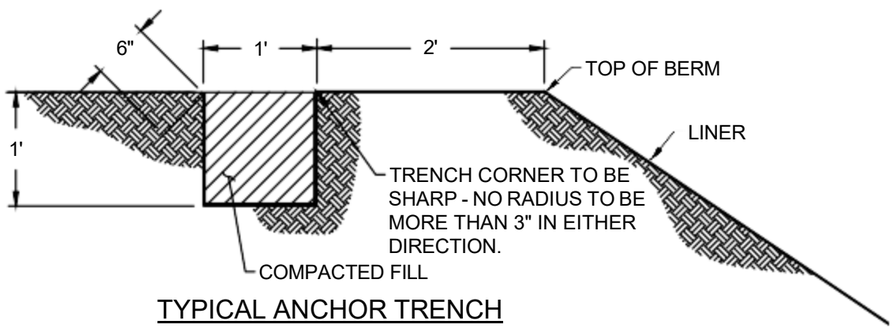

TYPICAL ANCHOR TRENCH

SCALE = ¾" = 1'-0"

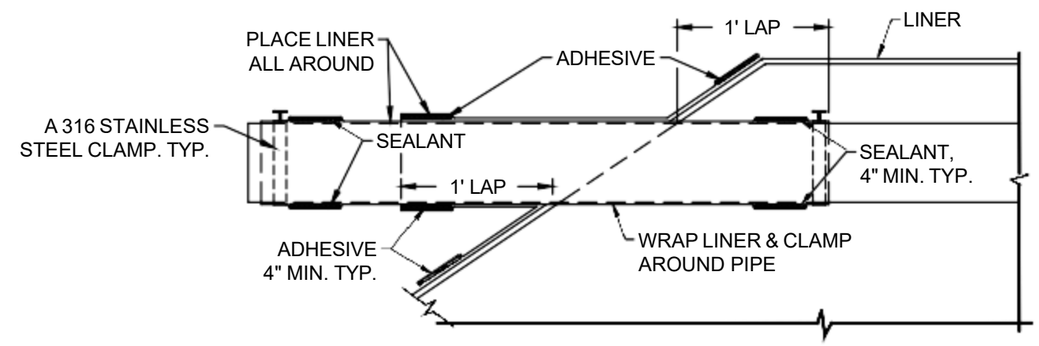

INLET PIPE LINER DETAIL (SECTION THRU Ø OF PIPE)

SCALE = ¾" = 1'-0"

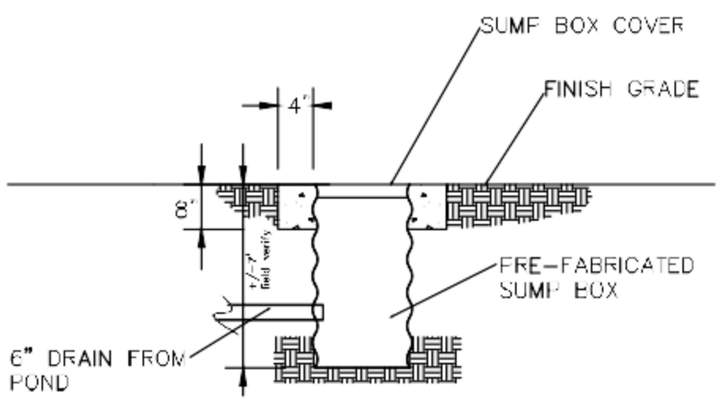

SUMP DETAIL

SCALE = 3/16" = 1'-0"

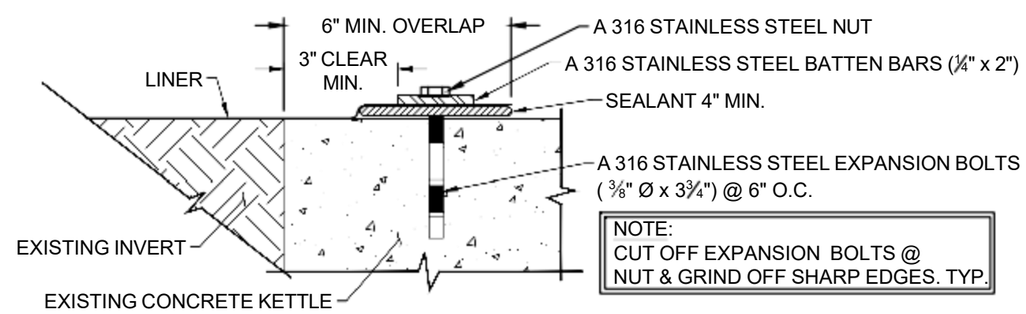

NOTE:
CUT OFF EXPANSION BOLTS @
NUT & GRIND OFF SHARP EDGES. TYP.

KETTLE APRON/LINER ATTACHMENT

SCALE = 3" = 1'-0"

UNITED STATES DEPARTMENT OF THE INTERIOR

U.S. FISH AND WILDLIFE SERVICE

DIVISION OF ENGINEERING

TISHOMINGO NATIONAL FISH HATCHERY

JOHNSTON COUNTY — OKLAHOMA

POND LINERS #5 & #5.5

TYPICAL POND LINER DETAILS

CIVIL

DESIGN: RAYNER	DRAWN: TOURJEE	CHECK: RS
DRAWING FILENAME AND NUMBER		DATE: 5/6/26
POND LINER		SHT. NO. 5 / SEQ. NO. 5 OF 6

* CONTRACTOR TO FIELD VERIFY BATTEN BAR LENGTHS.

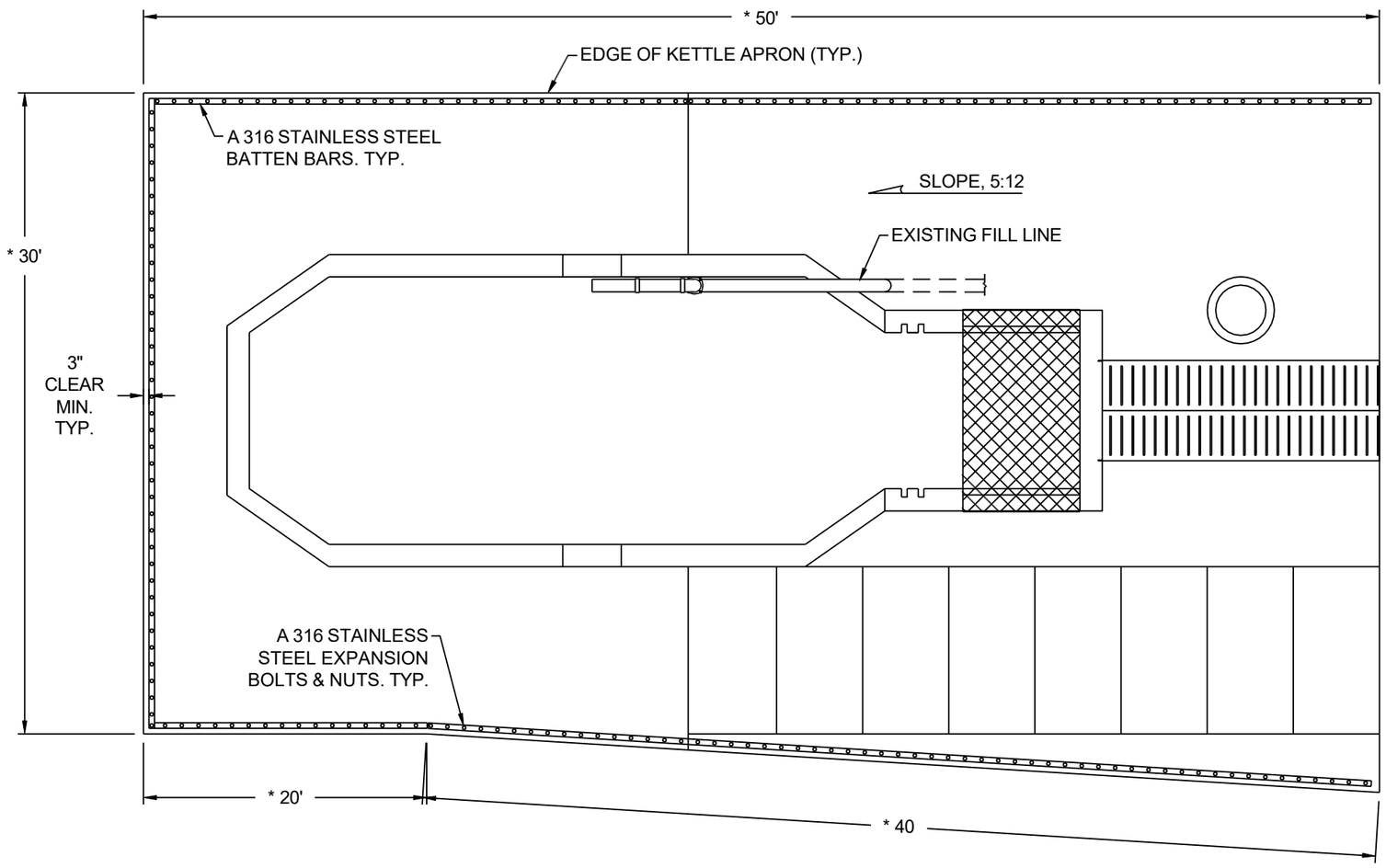

BATTEN BAR LAYOUT @ EXISTING KETTLE

N.T.S. (FIELD VERIFYDIMENSIONS)

UNITED STATES DEPARTMENT OF THE INTERIOR

U.S. FISH AND WILDLIFE SERVICE

DIVISION OF ENGINEERING

TISHOMINGO NATIONAL FISH HATCHERY

JOHNSTON COUNTY OKLAHOMA

POND LINERS #5 & #5.5

BATTEN BAR LAYOUT @ EXISTING KETTLE

CIVIL

DESIGN: RAYNER	DRAWN: RAYNER	CHECK: RS
DRAWING FILENAME AND NUMBER		DATE: 5/6/26
POND LINER		SHT. NO. 6 / SEQ. NO. 6 OF 6