U.S. COAST GUARD
CIVIL ENGINEERING UNIT
MIAMI

USCG PROJECT NUMBER: 13832866

REBUILD BAHIA DE GUAYANILLA ENTRANCE

RRL (LLNR 32075), AIDS TO NAVIGATION TEAM (ANT)

PUERTO RICO

DRAWING INDEX		
SHEET ID	SHEET #	SHEET TITLE
GENERAL		
G-001	1	COVER SHEET
STRUCTURAL		
S-001	2	STRUCTURAL NOTES
S-002	3	ATON STRUCTURE ELEVATION AND DETAILS
S-003	4	PLATFORM FRAMING AND DETAILS
S-004	5	PLATFORM GRATING DETAILS
S-005	6	TOWER ELEVATION AND DETAILS
S-006	7	TOWER PLATFORM ELEVATION AND DETAILS

PROJECT LOCATION

BAHIA DE GUAYANILLA ENTRANCE RRL (LLNR 32075)
VICINITY MAP
SCALE: NTS

GUZMAN.ROBERT.A.1269980628 Digitally signed by GUZMAN.ROBERT.A.1269980628 Date: 2025.05.09 15:28:22 -04'00'
ROBERT A. GUZMAN
DESIGN PROJECT MANAGER

PORRAS.EVA.I.1401393168 Digitally signed by PORRAS.EVA.I.1401393168 Date: 2025.05.15 11:02:57 -04'00'
EVA I. PORRAS
DESIGN CHIEF SUPERVISOR

SHERMAN.GRAHAM.STUART.1299310767 Digitally signed by SHERMAN.GRAHAM.STUART.1299310767 Date: 2025.12.08 16:27:14 -05'00'
GRAHAM SHERMAN, LCDR
EXECUTIVE OFFICER

U.S.C.G.
CE
U.S. COAST GUARD
CIVIL ENGINEERING

MARK	DESCRIPTION	DATE
1	FINAL DESIGN	MAY 2025

MEASUREMENT BAR: = 1" (HALF SIZE = 1/2")

AE COMPANY:
AE PROJECT NO.:
CONSULTING A/E:

USCG CIVIL ENGINEERING UNIT MIAMI
15008 SW 117TH AVE
MIAMI, FL 33177

USCG PROJECT MANAGER:
ROBERT A. GUZMAN
DRAWN BY: RG
DESIGNED BY:
EDITED BY: RG
CHECKED BY: EP

USCG PROJECT NUMBER 13832866
USCG DRAWING SERIES NUMBER M13832866
USCG FILENAME 13832866G-001.dwg
SHEET 01 OF 07

REBUILD BAHIA DE GUAYANILLA ENTRANCE RRL (LLNR 32075)
ANT
PUERTO RICO
GENERAL
COVER SHEET

SHEET ID
ATON
G-001

RANGE TOWER NOTES:

1. ALL DIMENSIONS, ELEVATIONS AND CONDITIONS SHALL BE VERIFIED IN THE FIELD BY THE CONTRACTOR. ANY DISCREPANCIES SHALL BE BROUGHT TO THE ATTENTION OF THE CONTRACTING OFFICER BEFORE ORDERING MATERIALS AND PROCEEDING WITH THE AFFECTED PART OF THE WORK.
2. CONTRACTOR SHALL MAINTAIN ADEQUATE SURVEY CONTROL AT ALL TIMES TO ESTABLISH AND MAINTAIN ALL LINES AND ELEVATIONS.
3. STRUCTURAL STEEL CONSTRUCTION SHALL CONFORM TO THE LATEST EDITION OF THE STEEL CONSTRUCTION MANUAL OF THE AMERICAN INSTITUTE OF STEEL CONSTRUCTION, UNLESS OTHERWISE DETAILED.
4. ALL STRUCTURAL STEEL SHAPES SHALL BE ASTM A572, GRADE 50 UNLESS OTHERWISE NOTED:
   a. MONOPILE ASTM A252, GRADE 3, SEAMLESS OR STRAIGHT SEAM.
   b. HSS SECTIONS ASTM A500, GRADE B, 46 KSI MIN. YIELD STRENGTH.
   c. STEEL PIPE HANDRAILS ASTM A53, TYPE E OR S, GRADE B.
5. ALL STRUCTURAL MEMBERS AND CONNECTIONS SHALL BE PROVIDED WITH COATING AND CORROSION PROTECTION SYSTEM IN ACCORDANCE WITH THE STEEL TREATMENT SCHEDULE.
6. ALL HSS SECTIONS SHALL BE SEALED AT OPEN ENDS WITH A ⅜" CLOSURE PLATE SEAL WELDED ALL AROUND.
7. SUBMIT DETAILED SHOP DRAWINGS TO THE CONTRACTING OFFICER FOR REVIEW AND APPROVAL PRIOR TO THE FABRICATION OR DELIVERY OF ANY STEEL.
8. ALL BOLTS SHALL BE ASTM A325, TYPE 1 UNLESS NOTED OTHERWISE.
9. ALL CONNECTIONS SHALL BE MADE WITH A 5/16" FILLET WELD OR PARTIAL PENETRATION GROOVE WELD, UNLESS NOTED OTHERWISE. ALL WELDS REGARDLESS OF TYPE SHALL BE WELDED ALL AROUND AND CONFORMING TO AWS D1.1 AND BE MADE WITH E70-XX ELECTRODES. ALL WELDS TO COMPLETELY SEAL CONNECTIONS.
10. PROVIDE ACCESS HATCH COVERS CONSTRUCTED OF STEEL FRAMING WITH THE SAME FIBERGLASS GRATING AS THE DECK. THE HATCH ASSEMBLY SHALL INCLUDE A LOCKING MECHANISM AND A COUNTER WEIGHT SUCH THAT IT HAS AN OPENING WEIGHT OF NO GREATER THAN 7 LBS. ALL HARDWARE AND CONNECTIONS SHALL BE VANDALPROOF.
11. PROVIDE FIBERGLASS EQUIPMENT ENCLOSURES TO HOUSE BATTERIES AND ELECTRICAL PANELS. HUTS SHALL BE SPECIFICALLY DESIGNED FOR HEAVY COMMERCIAL SERVICE IN A MARINE ENVIRONMENT AND SUITABLE TO HOUSE ELECTRICAL EQUIPMENT. THE HUTS SHALL HAVE THE FOLLOWING SPECIFIC CAPABILITIES:
    a. NATURAL VENTILATION
    b. 36-INCH DOOR WIDTH
    c. INSULATED AND WEATHER TIGHT
    d. WALLS DESIGNED TO SUPPORT ELECTRICAL PANELS
    e. DIMENSIONS OF 6' WIDE X 6' LONG X 8' HIGH (RRL).
    f. DESIGNED TO WITHSTAND WIND SPEEDS OF 180 MPH AND WITH SUFFICIENT CONNECTIONS TO TO TRANSMIT ALL WIND LOADS TO THE TOWER.
12. ALL LADDERS SHALL BE OUTFITTED WITH A SAFETY CLIMB SYSTEM, COMPATIBLE WITH ANTENNA PRODUCTS, INC. SAFETY CLIMB SYSTEM TUBULAR RAIL SLEEVE. THE SAFETY CLIMB SYSTEM SHALL BE INSTALLED IN ACCORDANCE WITH ANTENNA PRODUCTS, TECHNICAL MANUAL FOR SAFETY CLIMBING EQUIPMENT INSTALLATION.
13. DECKING SHALL BE FIBERGLASS REINFORCED PLASTIC (FRP) GRATING AND ANCHORED TO THE FRAMING USING PRE-WELDED STUDS TO PREVENT DAMAGE TO THE COATING SYSTEM.
14. ALL HANDRAILS, LADDERS AND OTHER SAFETY FEATURES SHALL MEET THE REQUIREMENTS OF OSHA.

LATTICE TOWER NOTES:

1. THE STEEL LATTICE TOWER CONSISTING OF THE STRUCTURE EXTENDING FROM THE MAIN PLATFORM TO THE OPTICS DECK, AND INCLUDING THE OPTICS DECK, IS PERFORMANCE SPECIFIED TO ALLOW FLEXIBILITY IN THE SELECTION OF THE TOWER STRUCTURE TYPE AND CONFIGURATION TO MEET THE MINIMUM LOADING REQUIRED. THEREFORE THE DESIGN, FABRICATION, AND INSTALLATION OF THE LATTICE TOWER IS A REQUIREMENT OF THIS CONTRACT. THE FOLLOWING CRITERIA ARE CONSIDERED MINIMUM REQUIREMENTS OF THE DESIGN.
   a. DESIGN WIND LOAD SHALL BE FOR A MINIMUM WIND SPEED OF 180 MPH
   b. MAXIMUM DEFLECTION SHALL BE 0.5 DEGREES AT OPTICS MOUNTING PLATE.
   c. LIVE LOAD SHALL INCLUDE A 300 POUND CONCENTRATED LOAD ON ANY PORTION OF THE STRUCTURE, COMBINED WITH A 60 PSF LOAD OVER THE ENTIRE OPTICS PLATFORM, AND REACTIONS FROM A 600 POUND CAPACITY DAVIT.
   d. TOWER SHALL BE FABRICATED OF GALVANIZED STEEL MEETING THE MINIMUM REQUIREMENTS OF ASTM A36 AND A123.
   e. THE TOWER FOOTPRINT IS INTENDED TO HAVE 3 LEGS AS LOCATED ON THESE DRAWINGS. ALTERNATIVE CONFIGURATIONS MAY BE PERMITTED PROVIDED THE TOWER LEGS BEAR DIRECTLY ON A STEEL PIPE BEAM.
   f. ALL HANDRAILS, LADDERS AND OTHER SAFETY FEATURES SHALL MEET THE REQUIREMENTS OF OSHA.
2. SAFETY CLIMB SYSTEM, COMPATIBLE WITH ANTENNA PRODUCTS, INC. SAFETY CLIMB SYSTEM TUBULAR RAIL SLEEVE. THE SAFETY CLIMB SYSTEM SHALL BE INSTALLED IN ACCORDANCE WITH ANTENNA PRODUCTS, TECHNICAL MANUAL FOR SAFETY CLIMBING EQUIPMENT INSTALLATION.
3. DECKING SHALL BE FIBERGLASS REINFORCED PLASTIC (FRP) GRATING AND ANCHORED TO THE FRAMING.

STEEL TREATMENT NOTES:

1. THE INTEGRITY OF THE COATING SYSTEM IS PARAMOUNT TO THE DESIGN SERVICE LIFE AND REQUIRES SPECIAL CARE DURING CONSTRUCTION TO MINIMIZE DAMAGE.
2. THE PROJECT HAS BEEN SPECIFICALLY DESIGNED TO MINIMIZE FIELD WELDING AND THE EXPECTATION IS THAT ALL WELDING WILL BE COMPLETED IN THE FABRICATION SHOP PRIOR TO COATING.
3. APPURTENANCES SUCH AS THE GRATING, HANDRAILS, LIGHT AND MAINTENANCE STANDS, RAPTOR STAND ETC. SHALL BE FABRICATED WITH PRE-WELDED ATTACHMENT STUDS OR MALE/FEMALE CONNECTIONS TO ALLOW ATTACHMENT IN THE FIELD WITHOUT WELDING.
4. APPLY JOINT SEALANT TO BACK-TO-BACK STEEL BOLTED CONNECTIONS.

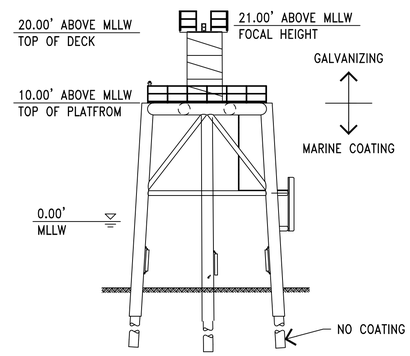

ATON STRUCTURE

COATING WORK PLAN

SCALE: 1/16"=1'-0" 0 8' 16' 32'

LOCATION OF ATONS:

LOCATION OF BAHIA DE GUAYANILLA ENTRANCE RRL (LLNR 32075):

LATITUDE: 17 DEGREES 59 MINUTES 06.99 SECONDS NORTH
LONGITUDE: 66 DEGREES 40.5 MINUTES 50.88 SECONDS WEST

THE SITE IS LOCATED ON THE ENTRANCE TO THE BAHIA DE GUAYANILLA, PUERTO RICO. THE LOCATION IS SHOWN ON DRAWING SHEET G-001.

GENERAL SCOPE OF WORK:

THE NEW STRUCTURE WILL CONSIST OF A METAL SKELETON TOWER DESIGN MOUNTED AND BOLTED TO A METAL PLATFORM SUPPORTED ON STEEL PILES. THE FOLLOWING IS A GENERAL SUMMARY OF THE WORK:

1. REMOVE THE EXISTING METAL TOWER AND STEEL PILES THAT ARE EMBEDDED IN THE MUDLINE, INCLUDING ANY DEBRIS STILL ATTACHED TO OR SURROUNDING THE STRUCTURE. THE PILES SHALL BE CUT AT THE MUD LINE ELEVATION (NOT PULLED OUT). DISPOSE IN ACCORDANCE WITH STATE AND FEDERAL LAWS.
2. SURVEY AND MARK THE LOCATION OF THE EXISTING STRUCTURE ON THE OCEAN BOTTOM WITH A TIMBER PILE MARKER FOR PLACEMENT OF THE NEW STRUCTURE.
3. CONSTRUCT THE NEW JAMES RIVER ICE RESISTANT STRUCTURE (JRIRS) PLATFORM FOUNDATIONS SUPPORTED ON STEEL PILES FOR THE STRUCTURE AS -PER DETAILS ON THESE DRAWINGS.
4. THE NEW JRIRS STRUCTURE WILL CONSIST OF A FOUR-PILE STEEL DOLPHIN AND AN EIGHT FEET SQUARE STEEL PLATFORM WITH FIBERGLASS GRATING THAT WILL SERVE AS THE FOUNDATION FOR A STEEL SKELETON TOWER. AN 18-INCH DIAMETER BY ½-INCH THICK "KING PILE" WILL BE DRIVEN ON THE SURVEYED POSITION, A STRUCTURAL STEEL JRIRS SLEEVE TEMPLATE AS SHOWN IN THE DRAWINGS WILL BE PLACED OVER THE "KING PILE" AND THREE 12-INCH BY ½-INCH DIAMETER BATTER PILES WILL BE DRIVEN THROUGH THE SLEEVE TEMPLATE. ALL STEEL PILES ARE TO BE DRIVEN TO REFUSAL OR A MINIMUM OF 45 TONS WHICHEVER IS ACHIEVED FIRST. THE STEEL PLATFORM AND FIBERGLASS GRATING WILL BE MOUNTED ON THE PILE DOLPHIN FOUNDATION. THE DESIGN HEIGHT FOR THE PLATFORM IS 10 FEET ABOVE THE MEAN LOWER LOW WATER (MLLW) ELEVATION OF 0.00 FEET BASED ON THE NORTH AMERICAN VERTICAL DATUM OF 1988 (NAVD 88). FOR PURPOSES OF BID, THE EMBEDMENT DEPTH OF THE STEEL PILES IN THE MUD LINE SHALL BE ASSUMED TO BE 50 FEET. THE WATER DEPTH AT THE AREA OF WORK FLUCTUATES DURING THE YEAR FROM APPROXIMATELY 10-FEET TO 15-FEET.
5. THE SKELETON TOWER MOUNTED ON THE JRIRS PLATFORM WILL HAVE A HEIGHT OF 10 FEET ABOVE THE STEEL PLATFORM. THE TOWER WILL BE USED TO SUPPORT SOLAR PANELS, DAY BOARDS, BATTERIES, LIGHT SIGNALS, AND SERVICING PERSONNEL AS NECESSARY. SOLAR PANELS, DAY BOARDS, BATTERIES AND LIGHT SIGNALS WILL BE PROVIDED AND INSTALLED BY (USCG) AIDS TO NAVIGATION TEAM (ANT) PUERTO RICO PERSONNEL.

   THE SKELETON METAL TOWER SHALL BE FABRICATED OFF SITE AS PER DETAILS ON THE DRAWINGS.

   PREPARE THE TOP OF THE STEEL PLATFORM FOUNDATION, TRANSPORT AND INSTALL METAL TOWER STRUCTURE TO FOUNDATION WITH ANCHOR BOLTS AS PER DETAILS ON THESE DRAWINGS.
6. CONDUCT A FINAL POSITION SURVEY OF THE STRUCTURE.

U.S.C.G.
CE
US COAST GUARD
CIVIL ENGINEERING

MARK	DESCRIPTION	DATE
1	FINAL DESIGN	MAY 2025

MEASUREMENT BAR: = 1" (HALF SIZE = 1/2")

A/E COMPANY:
A/E PROJECT NO.:
CONSULTING A/E:

USCG CIVIL ENGINEERING UNIT MIAMI
15608 SW 117TH AVE
MIAMI, FL 33177

USCG PROJECT MANAGER:
ROBERT A. GUZMAN

DRAWN BY: RG
DESIGNED BY: RG
CHECKED BY: EP
EDITED BY: RG

USCG PROJECT NUMBER 13022866
USCG DRAWING SERIES NUMBER M13832866
USCG FILENAME M13832866S-001.dwg
SHEET 02 OF 07

REBUILD BAHIA DE GUAYANILLA ENTRANCE RRL (LLNR 32075)
ANT
PUERTO RICO
STRUCTURAL
STRUCTURAL NOTES

SHEET ID
ATON
S-001

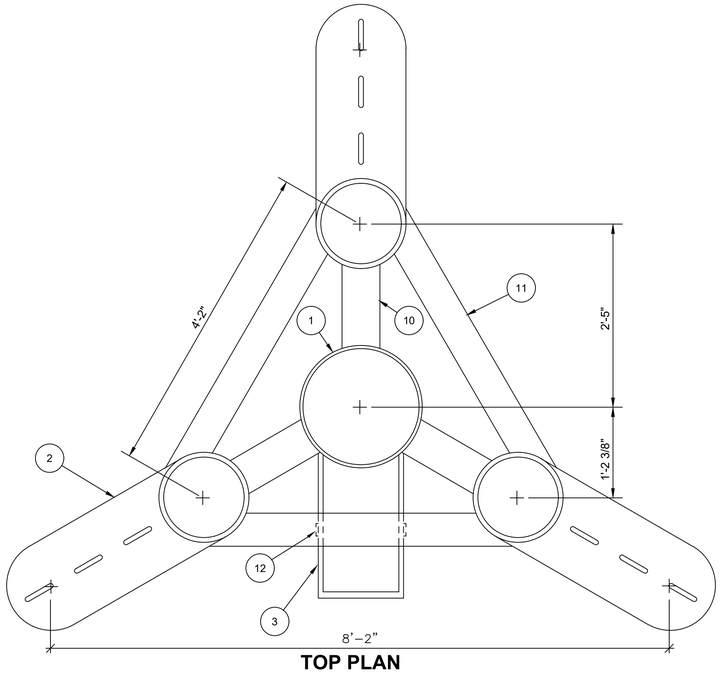

TOP PLAN

SCALE: 1"=1'-0"

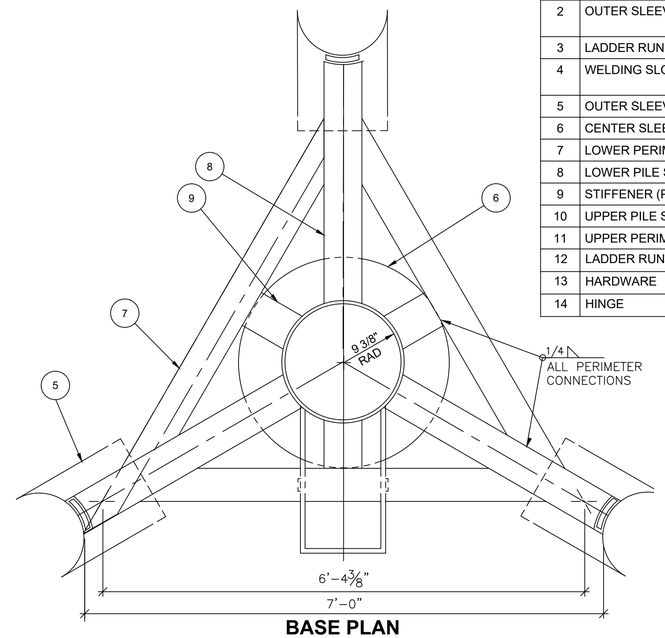

BASE PLAN

SCALE: 1"=1'-0"

OUTER SLEEVES NOT SHOWN FOR CLARITY

BILL OF MATERIAL

ITEM	NAME	MATERIAL	REMARKS	QTY.
1	CENTER SLEEVE	STEEL	18.75" I.D., 1/2" WALL, 8' LG., SEE NOTE 2	1
2	OUTER SLEEVE	STEEL PIPE	13.25" I.D., 3/8" WALL 8'-3" LG	3
3	LADDER RUNG	STEEL	SEE DETAIL 3	5
4	WELDING SLOT	-	1" WIDE BY 9" LG., CUT 12 EA. IN CENTER PILE AND 9 EA. IN OUTER.	39
5	OUTER SLEEVE GUSSET	1/2" STL. PLATE	SEE DETAIL 5	3
6	CENTER SLEEVE GUSSET	1/2" STL. PLATE	PL 1/2"x 3'-5 1/2" DIA	1
7	LOWER PERIMETER BRACING	STRUC. TUBING	STRUC. TUBING 6"x6"x3/8", 6'-3 3/4" LG	3
8	LOWER PILE SUPPORT	STRUC. TUBING	STRUC. TUBING 6"x6"x3/8", 3'-3 7/8" LG	3
9	STIFFENER (PTR. BRACE)	STRUC. TUBING	STRUC. TUBING 6"x6"x3/8", 11" LG	3
10	UPPER PILE SUPPORT	STRUC. TUBING	STRUC. TUBING 6"x6"x3/8", 1'-1/4" LG	3
11	UPPER PERIMETER BRACING	STRUC. TUBING	STRUC. TUBING 6"x6"x3/8", 3'-3 1/2" LG	3
12	LADDER RUNG SUPPORT	STEEL PLATE	2" WIDTH, 3/8" THICK, 6'-11 1/4" LONG	1
13	HARDWARE	316 S.S.	ALL HARDWARE SHALL BE 316 S.S.	1
14	HINGE	316 S.S.	ALL HINGES SHALL BE 316 S.S.	2

NOTES:

1. AFTER FABRICATION IS COMPLETE ABRASIVE BLAST ALL STEEL SURFACES TO SSPC SP10 (NEAR-WHITE) WITH A 2-3 MIL PROFILE. AFTER BLAST CLEANING, APPLY TWO PRIMER COATS OF ORGANIC ZINC PRIMER AT 2 TO 4 MILS DRY FILM THICKNESS (DFT). MAKE ALL REQUIRED REPAIRS TO PRIMER PRIOR TO APPLYING TOPCOAT OF COAL TAR EPOXY. APPLY TOPCOAT WITHIN RECOAT WINDOW AS SPECIFIED BY MANUFACTURER. APPLY TWO COATS OF COAL TAR EPOXY-POLYAMIDE TOPCOAT AT 6-8 MILS DFT. THE TOTAL SYSTEM OF PRIMER, AND TOPCOAT SHALL NOT BE LESS THAN 20 MILS DFT. APPLY ADDITIONAL TOPCOAT, IF NECESSARY, TO OBTAIN REQUIRED MINIMUM TOTAL SYSTEM THICKNESS. MEASURE APPLICATION WITH A MAGNETIC GAGE.
2. UPPER BRACES AND SUPPORTS NOT SHOWN FOR CLARITY.
3. OUTER SLEEVES NOT SHOWN FOR CLARITY.
4. ALL STEEL SHALL BE LOW ALLOY, HIGH STRENGTH WITH ATMOSPHERIC CORROSION RESISTANCE.

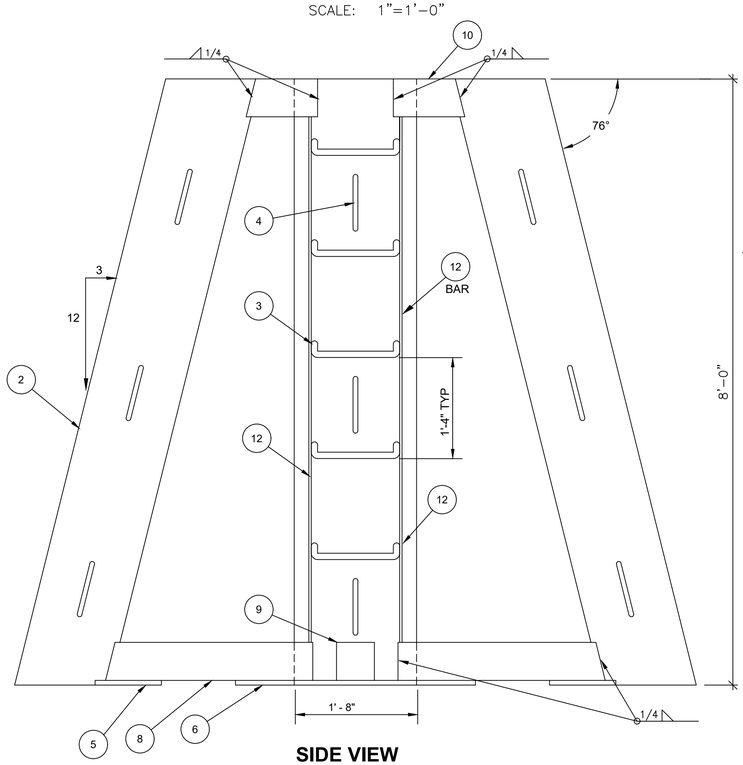

SIDE VIEW

SCALE: 1"=1'-0"

PERIMETER BRACING NOT SHOWN FOR CLARITY

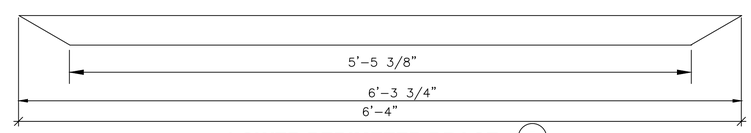

LOWER PERIMETER BRACE (7)

SCALE: 1 1/2"=1'-0"

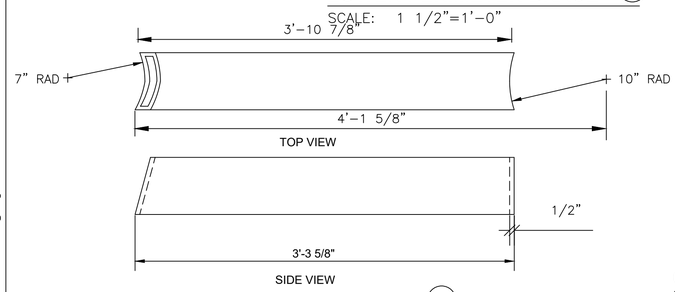

LOWER PILE SUPPORT (8)

SCALE: 1 1/2"=1'-0"

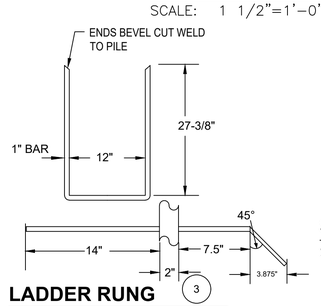

LADDER RUNG (3)

SCALE: 1"=1'-0" 5 REQ'D

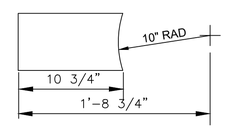

STIFFENER (PTR. BRACE) (9)

SCALE: 1 1/2"=1'-0"

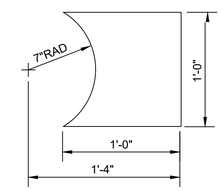

OUTER SLEEVE GUSSET (5)

SCALE: 1 1/2"=1'-0"

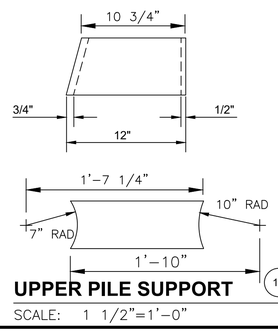

UPPER PILE SUPPORT (10)

SCALE: 1 1/2"=1'-0"

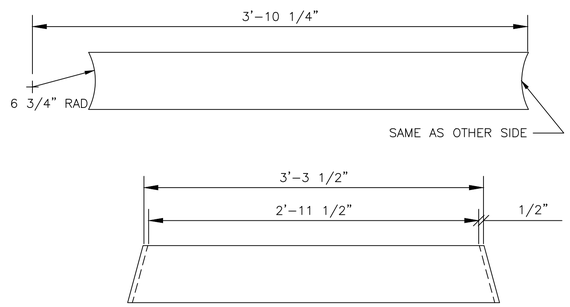

UPPER PERIMETER BRACE (11)

SCALE: 1 1/2"=1'-0"

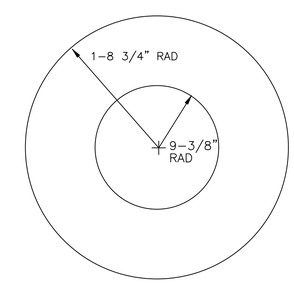

CENTER SLEEVE GUSSET (6)

SCALE: NONE

U.S.C.G.
US COAST GUARD
CIVIL ENGINEERING

MARK	DESCRIPTION	DATE
1	FINAL DESIGN	MAY 2025

MEASUREMENT BAR: = 1" (HALF SIZE = 1/2")

A/E COMPANY:
A/E PROJECT NO.:
CONSULTING A/E:

USCG CIVIL ENGINEERING UNIT MIAMI
15608 SW. 117TH AVE
MIAMI, FL 33177

USCG PROJECT MANAGER:
GUZMAN, ROBERT

DRAWN BY: RG
DESIGNED BY: RG
CHECKED BY: EP
EDITED BY: RG

USCG PROJECT NUMBER
UERTO RICO

USCG DRAWING SERIES NUMBER
M13832886

USCG FILENAME
M13832886S-002.dwg

SHEET 03 OF 07

REBUILD BAHIA DE GUAYANILLA ENTRANCE RRL (LLNR 32075)

ANT

PUERTO RICO

STRUCTURAL

ATON STRUCTURE ELEVATIONS AND DETALS

SHEET ID

ANT

S-002

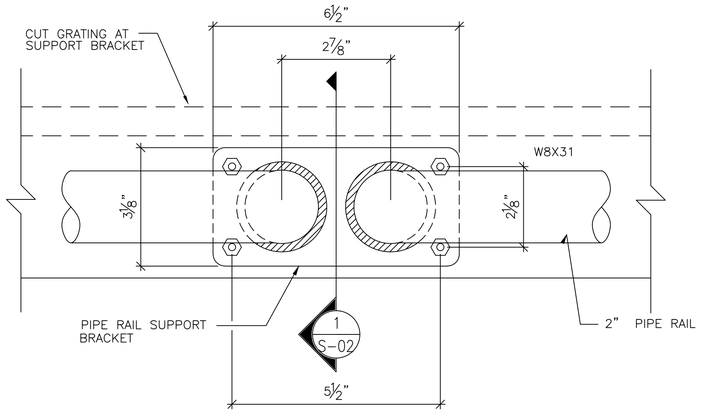

DETAIL A - HANDRAIL SUPPORT BRACKET (8 QUANTITY)

SCALE: NTS

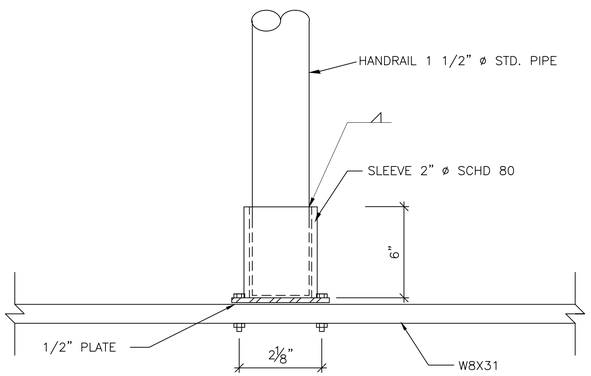

SECTION 1

SCALE: NTS

1
S-02

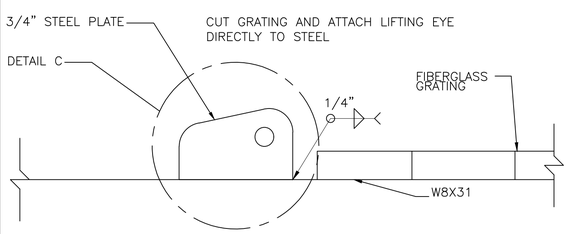

DETAIL B - LIFTING EYE (4 QUANTITY)

SCALE: NTS

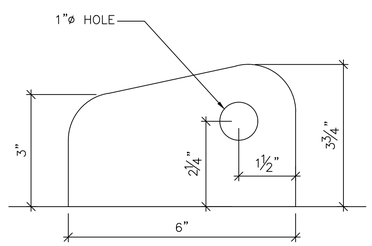

NOTE:
THIS IS THE ACTUAL SIZE. CUT OUT AND USE AS TEMPLATE. MATERIAL SIZE IS 3/4" THICK WITH A 1" DIA. HOLE FOR SHACKLE. ALL WELDED.

DETAIL C -STEEL PLATE

SCALE: 6" = 1'-0"

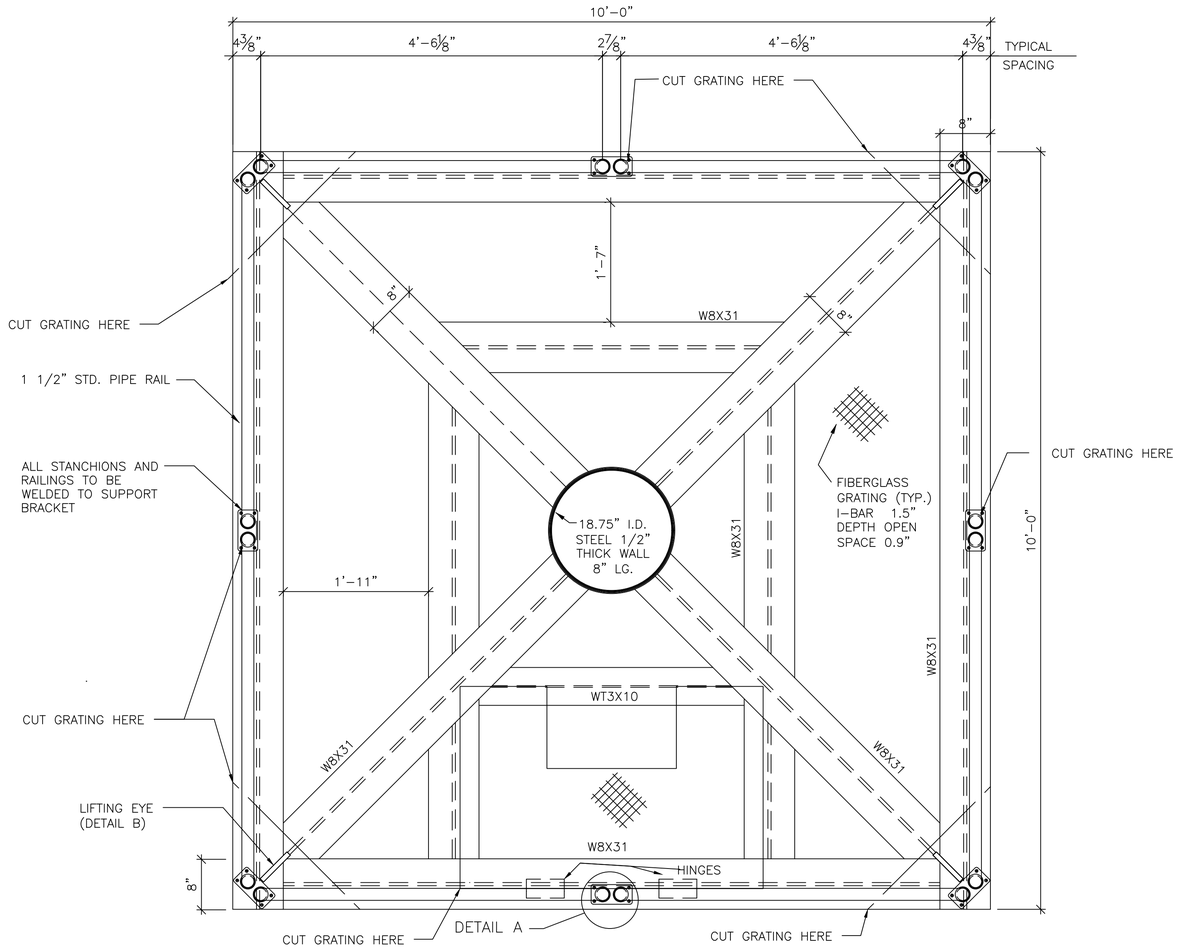

PLAN

SCALE: 1"=1'-0"

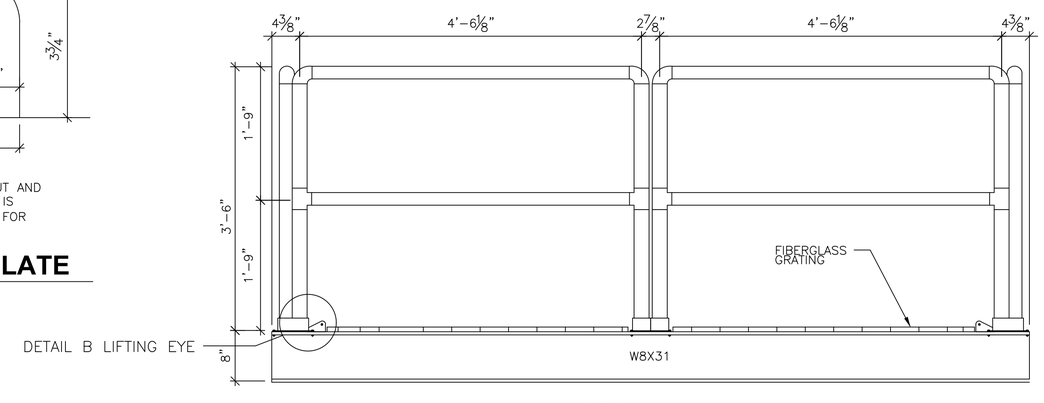

ELEV.

SCALE: 1"=1'-0"

U.S.C.G.
CE
US COAST GUARD CIVIL ENGINEERING

MARK	DESCRIPTION	DATE
1	FINAL DESIGN	MAY 2025

MEASUREMENT BAR: = 1" (HALF SIZE = 1/2")

A/E COMPANY:
A/E PROJECT NO.:
CONSULTING A/E:

USCG CIVIL ENGINEERING UNIT MIAMI
15608 SW 117TH AVE
MIAMI, FL 33177

USCG PROJECT MANAGER:
GUZMAN, ROBERT

DRAWN BY: RG
DESIGNED BY: RG
CHECKED BY: EP
EDITED BY: RG

USCG PROJECT NUMBER 13032866
USCG DRAWING SERIES NUMBER M13832866
USCG FILENAME M13832866S-003.dwg
SHEET 04 OF 07

REBUILD BAHIA DE GUAYANILLA ENTRANCE RRL (32075)
ANT
PUERTO RICO
STRUCTURAL
PLATFORM FRAMING AND DETAILS

SHEET ID
ANT
S-003

NOTES:

1. PROVIDE GRATING IN 4 PIECES AS SHOWN.
2. USE SADDLE CLIPS (316 SS) TO SECURE GRATING.

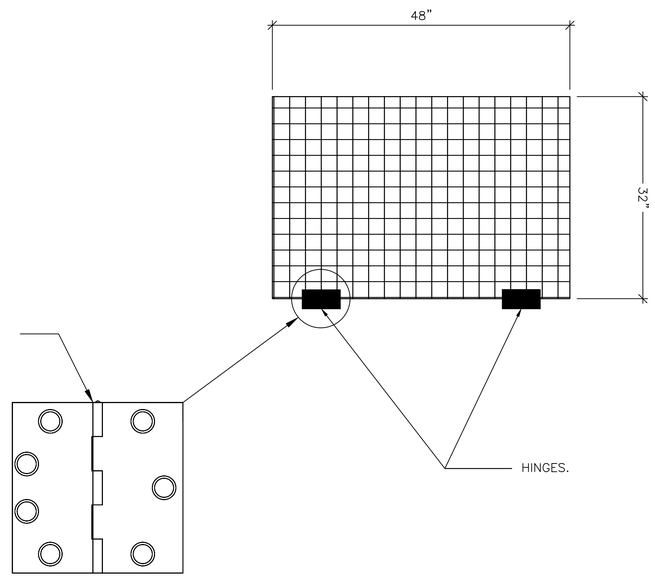

316 SS CHEM-PRUF FIVE KNUCKLE HINGE

SCALE: 6" = 1'-0"

FLIP GATE DETAIL

SCALE: 1"=1'-0"

NOTES:

1. RECOMMENDED FOR AVERAGE FREQUENCY
2. NPR
3. SIZE: 4-1/2" X 4-1/2"
4. 316 SS WITH NO FINISH
5. METAL GAUGE: .120

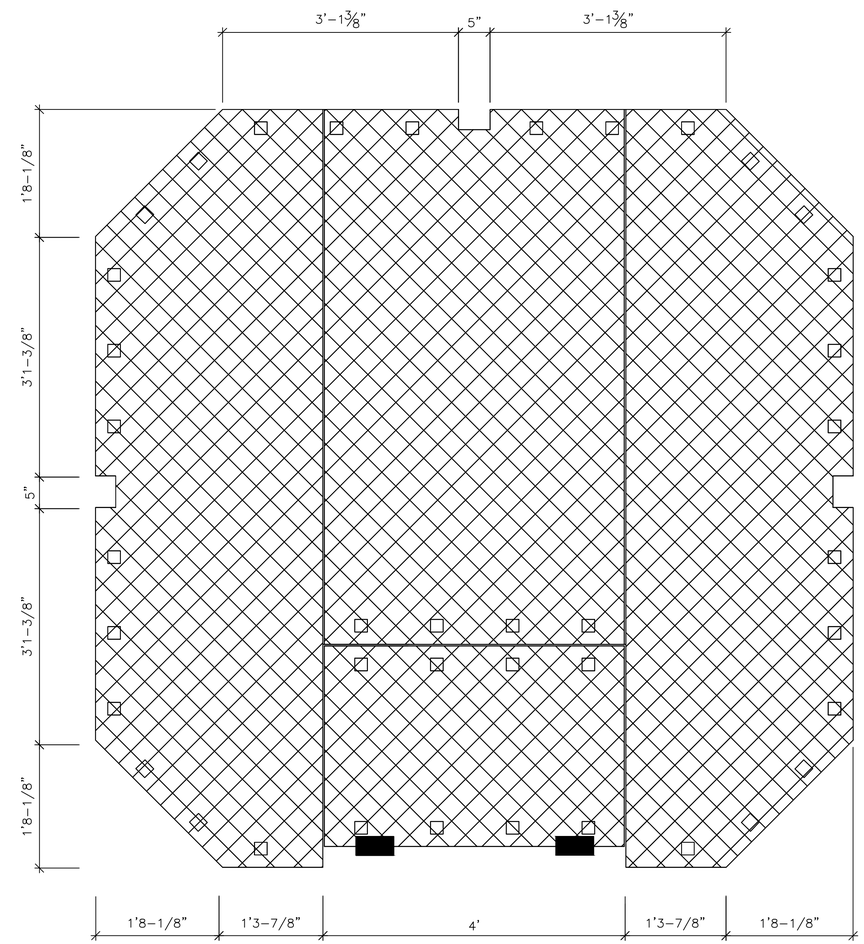

GRATING PLAN

SCALE: 1"=1'-0"

U.S.C.G.
US COAST GUARD
CIVIL ENGINEERING

MARK	DESCRIPTION	DATE
1	FINAL DESIGN	MAY 2025

MEASUREMENT BAR: = 1" (HALF SIZE = 1/2")

A/E COMPANY:
A/E PROJECT NO.:
CONSULTING A/E:

USCG CIVIL ENGINEERING UNIT MIAMI
15508 SW 117TH AVE
MIAMI, FL 33177

USCG PROJECT MANAGER:
GUZMAN, ROBERT

DRAWN BY: RG
DESIGNED BY: RG
CHECKED BY: EP
EDITED BY: RG

USCG PROJECT NUMBER 13832866
USCG DRAWING SERIES NUMBER M13832866
USCG FILENAME M13832866S-004.dwg
SHEET 05 OF 07

REBUILD BAHIA DE GUAYANILLA ENTRANCE RRL (LLNR32075)
ANT
PUERTO RICO
STRUCTURAL
PLATFORM GRATING DETAILS

SHEET ID
ANT
S-004

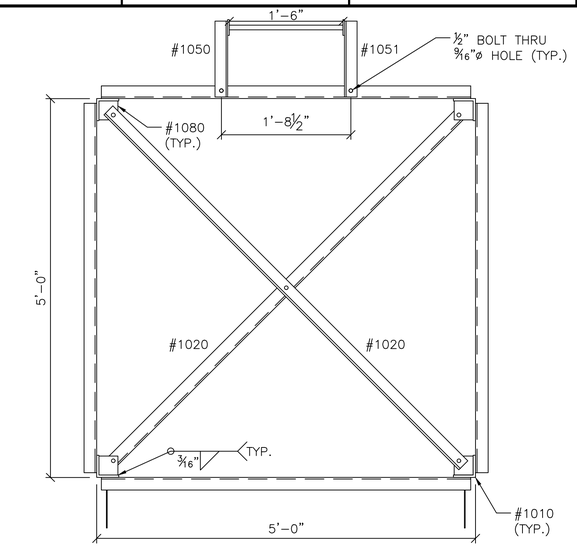

PLAN (SECTION)

SCALE: 1" = 1'-0"

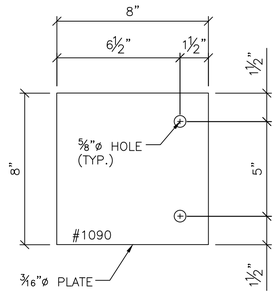

DAYMARK BRACKET DETAIL (6 REQ'D)

SCALE: 3" = 1'-0"

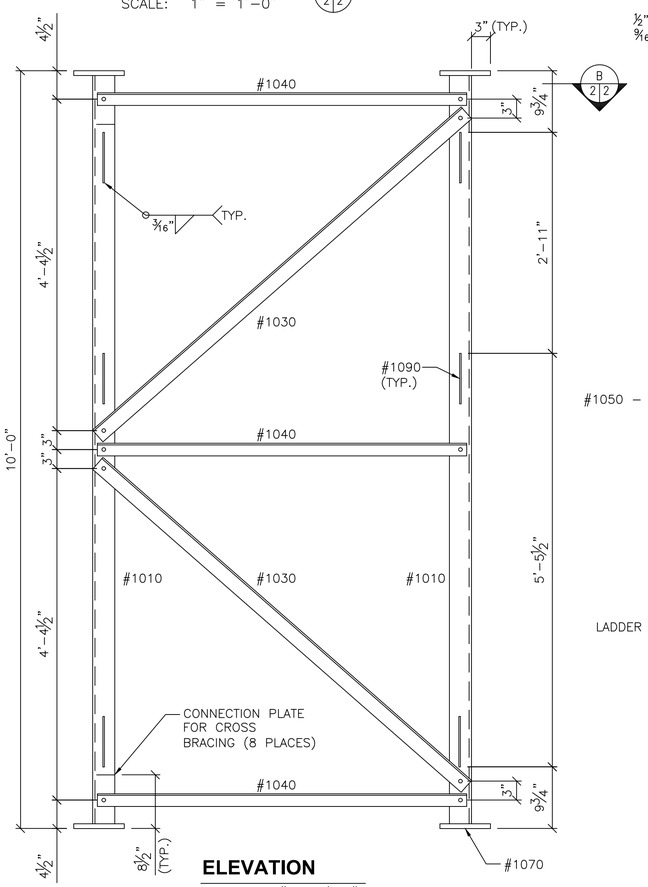

ELEVATION

SCALE: 1" = 1'-0"

(NOTE: SIDE MEMBERS NOT SHOWN FOR CLARITY.)

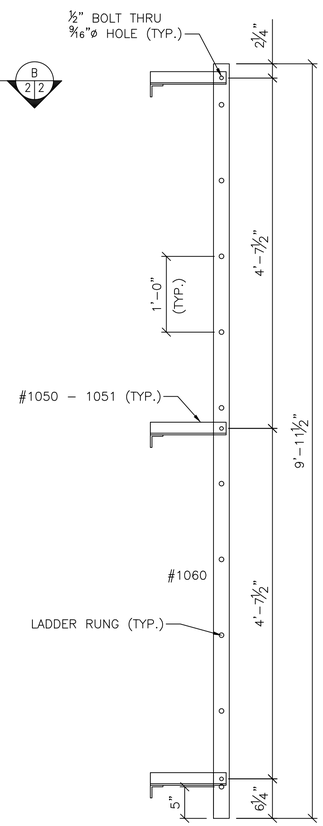

LADDER SIDE ELEVATION

SCALE: 1" = 1'-0"

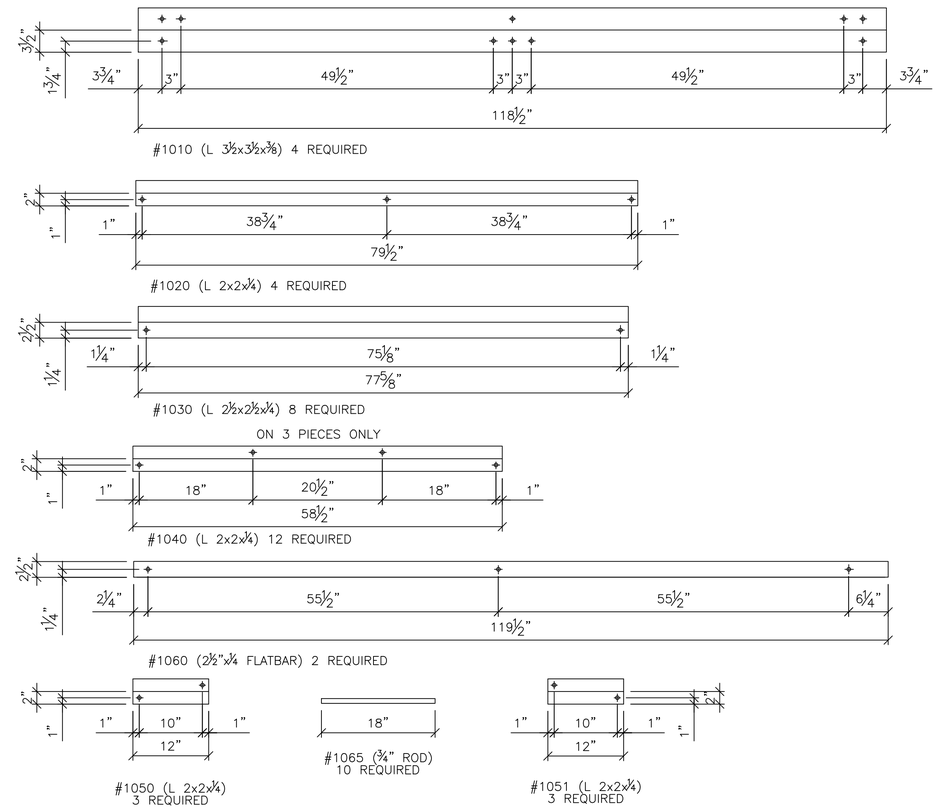

MEMBER DETAILS

SCALE: 1" = 1'-0"

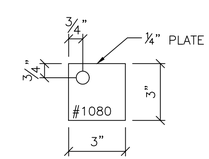

HOR. BRACE CONN. PLATE DETAIL (8 REQ'D)

SCALE: 3" = 1'-0"

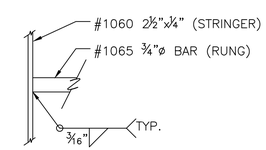

LADDER RUNG DETAIL

SCALE: 3" = 1'-0"

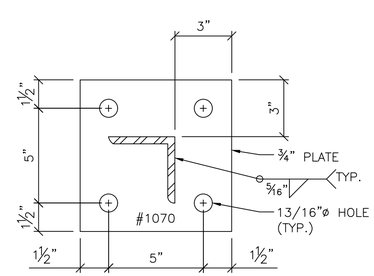

TOWER CONNECTION PLATE DETAIL (8 REQUIRED)

SCALE: 3" = 1'-0"

NOTES:

1. ALL STRUCTURAL SHAPES AND PLATES SHALL CONFORM TO ASTM A36. ALL STEEL SHAPES AND PLATES SHALL BE HOT-DIP GALVANIZED PER THE SPECIFICATION AFTER FABRICATION.
2. ALL BOLTS SHALL BE ASTM A325 TYPE 1 HEAVY HEX, NUTS SHALL BE HEAVY HEX ASTM A194 GRADE 2H OR ASTM A563 GRADE DH. HARDENED STEEL WASHERS SHALL BE USED AS SPECIFIED BELOW. ALL HARDWARE SHALL BE HOT-DIP GALVANIZED PER THE SPECIFICATION.
3. ANGLES SHOWN OPEN IN THE 'MEMBER DETAILS' TO SHOW BOLT HOLE LOCATIONS.
4. ALL HOLES 13/16" UNLESS OTHERWISE NOTED. ALSO REQUIRED FOR EACH 10 FT BASE SECTION:
   A. SIXTEEN ¾"x2-¾" BOLTS WITH NUTS AND TWO WASHERS EACH (TOWER CONNECTION PLATES).
   B. FIFTY ⅝"x1-¾" BOLTS WITH NUTS AND LOCK WASHERS EACH (BRACING CONNECTIONS).
   C. TWENTY-FOUR ½"x1-¾" BOLTS WITH NUTS AND TWO WASHERS EACH (DAYBOARD BRACKETS AND LADDER SUPPORTS).
5. TWO 10 FT LONG GALVANIZED L 2x2x¼ REQUIRED FOR DAYBOARD SUPPORT RAILS (NOT SHOWN).

U.S.C.G.
US COAST GUARD
CIVIL ENGINEERING

MARK	DESCRIPTION	DATE
1	FINAL DESIGN	MAY 2025

MEASUREMENT BAR: = 1" (HALF SIZE = 1/2")

A/E COMPANY:
A/E PROJECT NO.:
CONSULTING A/E:

USCG CIVIL ENGINEERING UNIT MIAMI
15906 SW 117TH AVE
MIAMI, FL 33177

USCG PROJECT MANAGER:
GUZMAN, ROBERT

DRAWN BY: RG
CHECKED BY: EP
DESIGNED BY: RG
EDITED BY: RG

USCG PROJECT NUMBER 13832866
USCG DRAWING SERIES NUMBER M13832866
USCG FILENAME M13832866S-005.dwg
SHEET 06 OF 07

REBUILD BAHIA DE GUAYANILLA ENTRANCE RRL (LLNR32075)
PUERTO RICO
ANT
STRUCTURAL
TOWER ELLEVATION AND DETAILS

SHEET ID
ANT
S-005

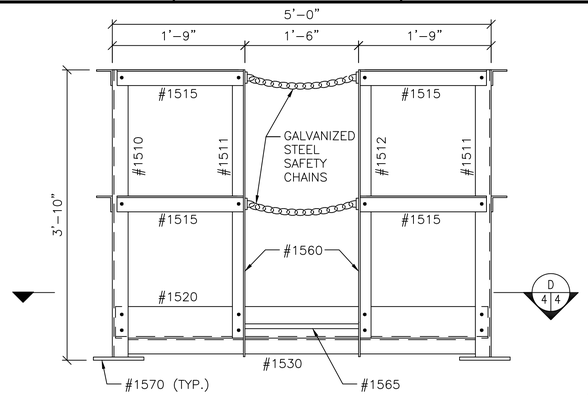

PLATFORM REAR ELEVATION

SCALE: 1" = 1'–0"

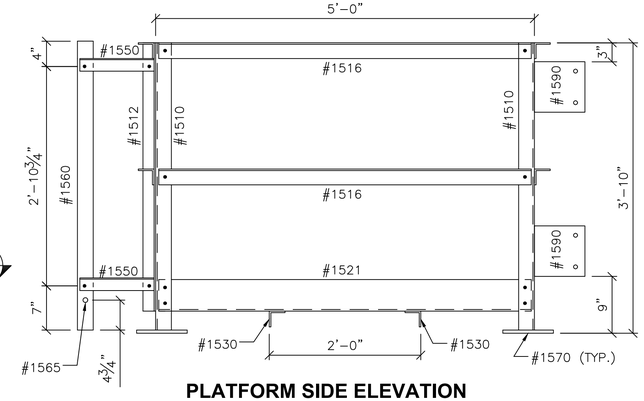

PLATFORM SIDE ELEVATION

SCALE: 1" = 1'–0"

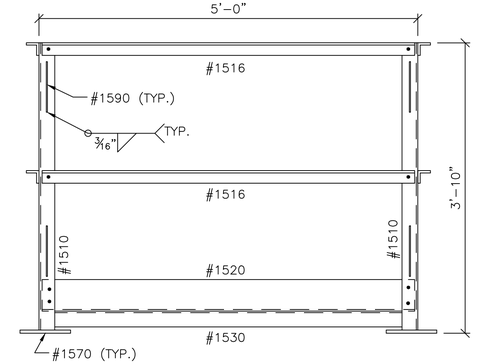

PLATFORM FRONT ELEVATION

SCALE: 1" = 1'–0"

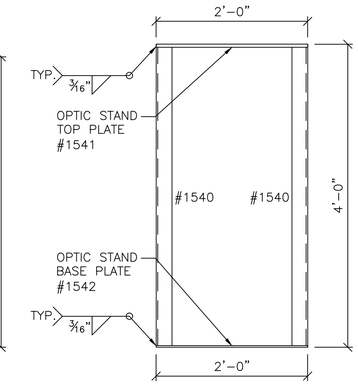

OPTIC STAND ELEVATION

SCALE: 1" = 1'–0"

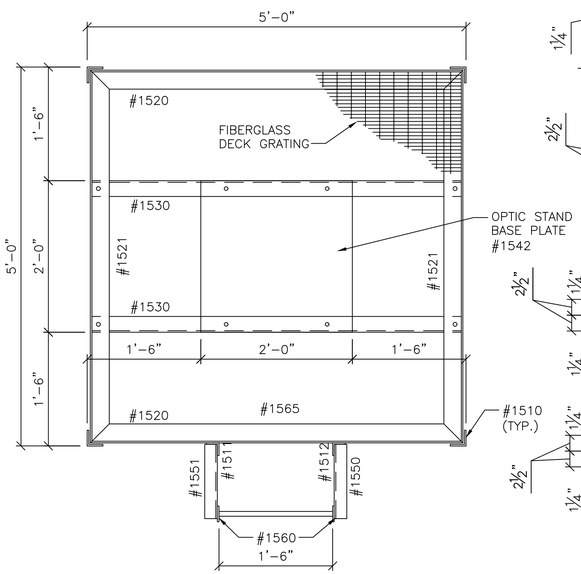

PLATFORM PLAN (SECTION)

SCALE: 1" = 1'–0"

D 4 4

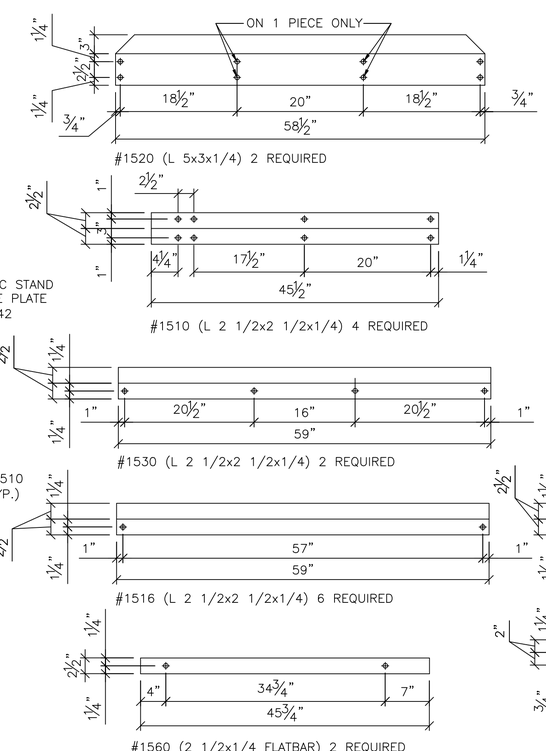

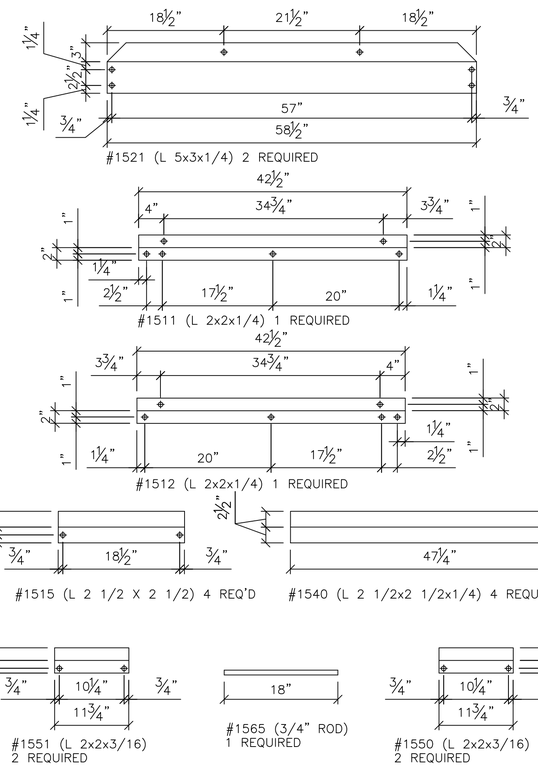

MEMBER DETAILS

SCALE: 1" = 1'–0"

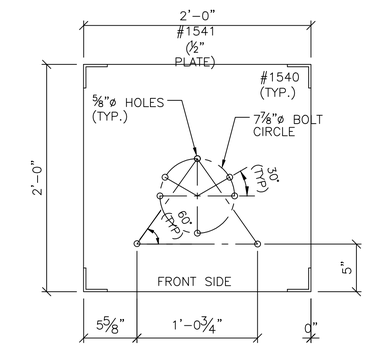

OPTIC STAND TOP PLATE

SCALE: 1 1/2" = 1'–0"

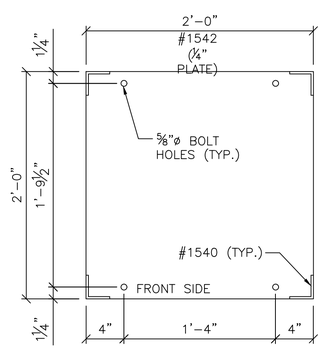

OPTIC STAND BOTTOM PLATE

SCALE: 1 1/2" = 1'–0"

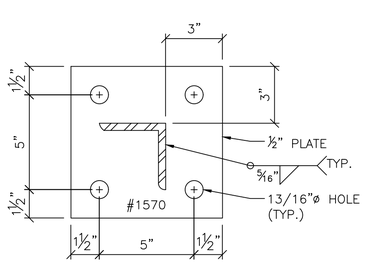

TOWER CONNECTION PLATE DETAIL (8 REQUIRED)

SCALE: 3" = 1'–0"

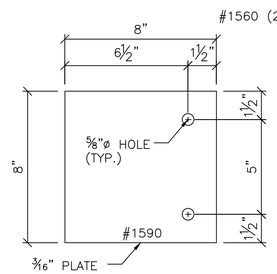

DAYMARK BRACKET DETAIL (6 REQ'D)

SCALE: 3" = 1'–0"

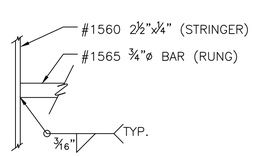

LADDER RUNG DETAIL

SCALE: 3" = 1'–0"

NOTES:

1. ALL STRUCTURAL SHAPES AND PLATES SHALL CONFORM TO ASTM A36. ALL STEEL SHAPES AND PLATES SHALL BE HOT–DIP GALVANIZED PER THE SPECIFICATION AFTER FABRICATION.
2. ALL BOLTS SHALL BE ASTM A325 TYPE 1 HEAVY HEX, NUTS SHALL BE HEAVY HEX ASTM A194 GRADE 2H OR ASTM A563 GRADE DH. HARDENED STEEL WASHERS SHALL BE USED AS SPECIFIED BELOW. ALL HARDWARE SHALL BE HOT–DIP GALVANIZED PER THE SPECIFICATION.
3. ANGLES SHOWN OPEN IN THE 'MEMBER DETAILS' TO SHOW BOLT HOLE LOCATIONS.
4. ALL HOLES 9/16" UNLESS OTHERWISE NOTED. ALSO REQUIRED FOR EACH PLATFORM SECTION:
   A. SIXTEEN ¾"x2–¾" BOLTS WITH NUTS AND TWO WASHERS EACH (TOWER CONNECTION PLATES).
   B. FORTY–FOUR ½"x1–¾" BOLTS WITH NUTS AND LOCK WASHERS EACH (ANGLE CONNECTIONS).
   C. TWENTY ½"x1–¾" BOLTS WITH NUTS AND TWO WASHERS EACH (LADDER SUPPORTS, OPTIC STAND BASE AND DAYBOARD BRACKETS).
5. TWO 5 FT LONG GALVANIZED L 2x2x¼ REQUIRED FOR DAYBOARD SUPPORT RAILS (NOT SHOWN).

U.S.C.G. CE
US COAST GUARD CIVIL ENGINEERING

MARK	DESCRIPTION	DATE
1	FINAL DESIGN	MAY 2025

MEASUREMENT BAR: = 1" (HALF SIZE = 1/2")

A/E COMPANY:
A/E PROJECT NO.:
CONSULTING A/E:

USCG CIVIL ENGINEERING UNIT MIAMI
15608 SW 117TH AVE
MIAMI, FL 33177

USCG PROJECT MANAGER: GUZMAN, ROBERT
DESIGNED BY: RG
DRAWN BY: RG
EDITED BY: RG
CHECKED BY: EP

USCG PROJECT NUMBER PUERTO RICO
USCG DRAWING SERIES NUMBER M13832986
USCG FILENAME M13832986S-006.dwg
SHEET 07 OF 07

REBUILD BAHIA DE GUAYANILLA ENTRANCE RRL (LLNR 32075)
ANT
PUERTO RICO
STRUCTURAL
TOWER PLATFORM ELEVATION AND DETAILS

SHEET ID
ANT
S-006