NOT FOR CONSTRUCTION

# VA STEAM LINE REPLACEMENT

## Department of Veterans Affairs Medical Center

VAMC - Salisbury 1601 Brenner Avenue - Salisbury, NC 28144 PROJECT #: 659-24-903


## ABOVE GROUP, INC.
MECHANICAL ELECTRICAL PLUMBING
305 EAST DRIVE, SUITE H
MELBOURNE, FL 32904
321.345.9026 P

## FORCE PROTECT
PHYSICAL SECURITY & BLAST DESIGN
10901 FRONT BEACH ROAD, SUITE 1415
PANAMA CITY BEACH, FL 32407
502.836.4232 P

## ALPHA TERRA
ENVIRONMENTAL & COMMISSIONING
8626 TESORO DRIVE, SUITE 810
SAN ANTONIO, TX 78217
210.930.2834 P

## STANTON ENGINEERING SERVICES
LIFE SAFETY & CITP REVIEW
1028 OLD COLUMBIA ROAD, SUITE 275
COLUMBIA, MD 21046
410.290.9301 P

## OCMI
COST ESTIMATING
2015 AYRSLEY TOWN BLVD., SUITE 202
CHARLOTTE, NC 28273
704.280.8356 P

PROJECT LOCATION

© Google/Apple/Bing Maps

### SHEET LIST

| SHEET NUMBER | SHEET NAME |
|---|---|
| GENERAL | |
| GI001 | COVER SHEET |
| CIVIL | |
| C-3 | EXISTING CONDITIONS |
| C-4 | DEMOLITION PLAN |
| C-5 | SITE PLAN |
| C-7.01 | GRADING PLAN |
| C-7.02 | GRADING PLAN |
| C-7.03 | GRADING PLAN |
| C-7.04 | GRADING PLAN |
| C-7.05 | GRADING PLAN |
| C-8.01 | UTILITY PLAN |
| C-8.02 | UTILITY PLAN |
| C-8.03 | UTILITY PLAN |
| C-8.04 | UTILITY PLAN |
| C-8.05 | UTILITY PLAN |
| C-8.06 | UTILITY PLAN |
| C-8.07 | UTILITY PLAN |
| C-9 | UTILITY DETAILS |
| C-10.1 | TRAFFIC CONTROL PLAN |
| C-10.2 | TRAFFIC CONTROL PLAN |
| C-10.3 | TRAFFIC CONTROL PLAN |
| STRUCTURAL | |
| S-001 | GENERAL NOTES AND ABBREVIATIONS |
| SS101 | MANHOLE MH-10B PLANS AND ELEVATIONS - PHASE 3 |
| SS102 | MANHOLE MH-16A PLANS AND ELEVATIONS - PHASE 4 |
| SS103 | MANHOLE MH-17B PLANS AND ELEVATIONS - PHASE 4 |
| SS104 | MANHOLE MH-15A PLANS AND ELEVATIONS - PHASE 5 |
| SS105 | MANHOLE MH-17C PLANS AND ELEVATIONS - PHASE 5 |
| SS106 | MANHOLE MH-15B PLANS AND ELEVATIONS - PHASE 6 |
| S-301 | CONCRETE DETAILS AND SECTIONS |
| MECHANICAL | |
| M-001 | MECHANICAL NOTES, LEGENDS, & SYMBOLS |
| M-101 | MECHANICAL - PHASING |
| MD103 | SITE PLAN - MECHANICAL - DEMOLITION - PHASE 3 |
| MD104 | SITE PLAN - MECHANICAL - DEMOLITION - PHASE 4 |
| MD106 | SITE PLAN - MECHANICAL - DEMOLITION - PHASE 6 |
| MP101 | SITE PLAN - MECHANICAL - NEW WORK - PHASE 1 |
| MP102 | SITE PLAN - MECHANICAL - NEW WORK - PHASE 2 |
| MP103 | SITE PLAN - MECHANICAL - NEW WORK - PHASE 3 |
| MP104 | SITE PLAN - MECHANICAL - NEW WORK - PHASE 4 |
| MP105 | SITE PLAN - MECHANICAL - NEW WORK - PHASE 5 |
| MP106 | SITE PLAN - MECHANICAL - NEW WORK - PHASE 6 |
| MP107 | SITE PLAN - MECHANICAL - NEW WORK - PHASE 7 |
| MD401 | MH-10B - MECH PLANS AND SECTIONS - DEMOLITION - PHASE 3 |
| MD402 | MH-16A - MECH PLANS AND SECTIONS - DEMOLITION - PHASE 3 |
| MD403 | MH-17B - MECH PLANS AND SECTIONS - DEMOLITION - PHASE 3 |
| MD404 | MH-1 - MECH PLANS AND SECTIONS - DEMOLITION - PHASE 4 |
| MD405 | MH-10A - MECH PLANS AND SECTIONS - DEMOLITION - PHASE 6 |
| MD406 | MH-C - MECH PLANS AND SECTIONS - DEMOLITION - PHASE 6 |
| MD407 | MH-10B - MECH PLANS AND SECTIONS - DEMOLITION - PHASE 6 |
| MD408 | MH-16A - MECH PLANS AND SECTIONS - DEMOLITION - PHASE 6 |
| MD409 | MH-17B - MECH PLANS AND SECTIONS - DEMOLITION - PHASE 6 |
| MP401 | MH-10B - MECH PLANS AND SECTIONS - NEW WORK - PHASE 3 |
| MP402 | MH-16A - MECH PLANS AND SECTIONS - NEW WORK - PHASE 3 |
| MP403 | MH-17B - MECH PLANS AND SECTIONS - NEW WORK - PHASE 3 |
| MP404 | MH-16A - MECH PLANS AND SECTIONS - NEW WORK - PHASE 4 |
| MP405 | MH-17B - MECH PLANS AND SECTIONS - NEW WORK - PHASE 4 |
| MP406 | MH-15A - MECH PLANS AND SECTIONS - NEW WORK - PHASE 5 |
| MP407 | MH-17C- MECH PLANS AND SECTIONS - NEW WORK - PHASE 5 |
| MP408 | MH-15B - MECH PLANS AND SECTIONS - NEW WORK - PHASE 6 |
| MP409 | B16 - MECH PLANS AND PHOTOS |
| MP410 | B17 - MECH PLANS AND PHOTOS |
| M-501 | MECHANICAL DETAILS |
| M-502 | MECHANICAL EXISTING CONDITIONS DETAILS |
| M-801 | MECHANICAL SCHEDULES |

| Revisions | Date |
|---|---|
| | |

CONSULTANT

ARCHITECT/ENGINEER OF RECORD

2014-2024 10TH ANNIVERSARY Above Group ENGINEERING | DESIGN | CONSULTING

SDVOSB SVE

www.abovegroupinc.com
COA/CA Lic. No. 31120

305 East Dr., Suite H,
Melbourne, Florida 32904
PH: 321.345.9026

STAMP

STATE OF MARYLAND · GEOFFREY S. CHENOWETH · No. 39825 · REGISTERED PROFESSIONAL ENGINEER

Office of Construction and Facilities Management

VA U.S. Department of Veterans Affairs

| | |
|---|---|
| Drawing Title | COVER SHEET |
| Phase | 100% CONSTRUCTION DOCUMENTS |
| Project Title | STEAM LINE REPLACEMENT |
| Project Number | 659-24-903 |
| Building Number | |
| Approved: | |
| Location | SALISBURY VAMC |
| Issue Date | 09/27/2024 |
| Checked | BA |
| Drawn | JP |
| Drawing Number | GI001 |

VA FORM 08 - 6231

Autodesk Docs://0123056 - Salisbury Steam Line Replacement/0123056 - VA Salisbury Stm Line Repl - R23_ME.rvt 10/1/2024 10:13:04 AM

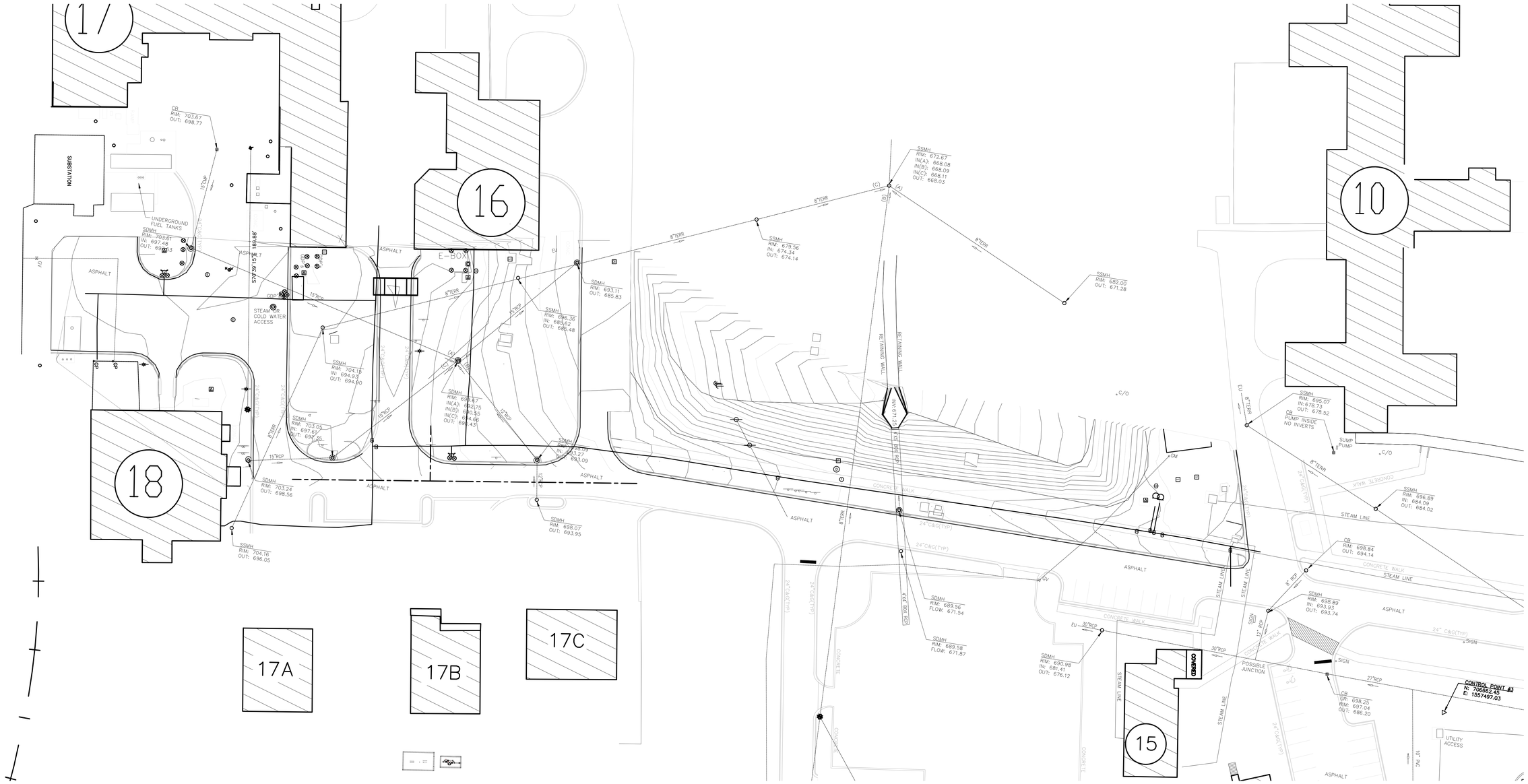


0 30 60 Feet

Scale: 1"=30-0"

| CONSULTANT | ARCHITECT/ENGINEER OF RECORD | STAMP | Office of Construction and Facilities Management | Drawing Title | Phase | Project Title | Project Number |
|---|---|---|---|---|---|---|---|
| ALPHA TERRA architecture engineering environment | 2014-2024 10TH ANNIVERSARY Above Group ENGINEERING \| DESIGN \| CONSULTING<br>www.abovegroupinc.com COA/CA Lic. No. 31120<br>305 East Dr., Suite H, Melbourne, Florida 32904 PH: 321.345.9026 | STATE OF TEXAS DONALD E. VON DRAN 92737 PROFESSIONAL ENGINEER F-8920 9-30-24 | VA U.S. Department of Veterans Affairs | EXISTING CONDITIONS | 100% CONSTRUCTION DOCUMENTS | STEAM LINE REPLACEMENT | 659-24-903 |
| | | | | Approved: | | Location: SALISBURY, NC VA | Building Number |
| | | | | | | Issue Date: 7/15/2024 · Checked: KVD · Drawn: KVD | Drawing Number: C-3 |

Revisions | Date

File Path

7/15/2024 11:53:43 AM

VA FORM 08 - 6231

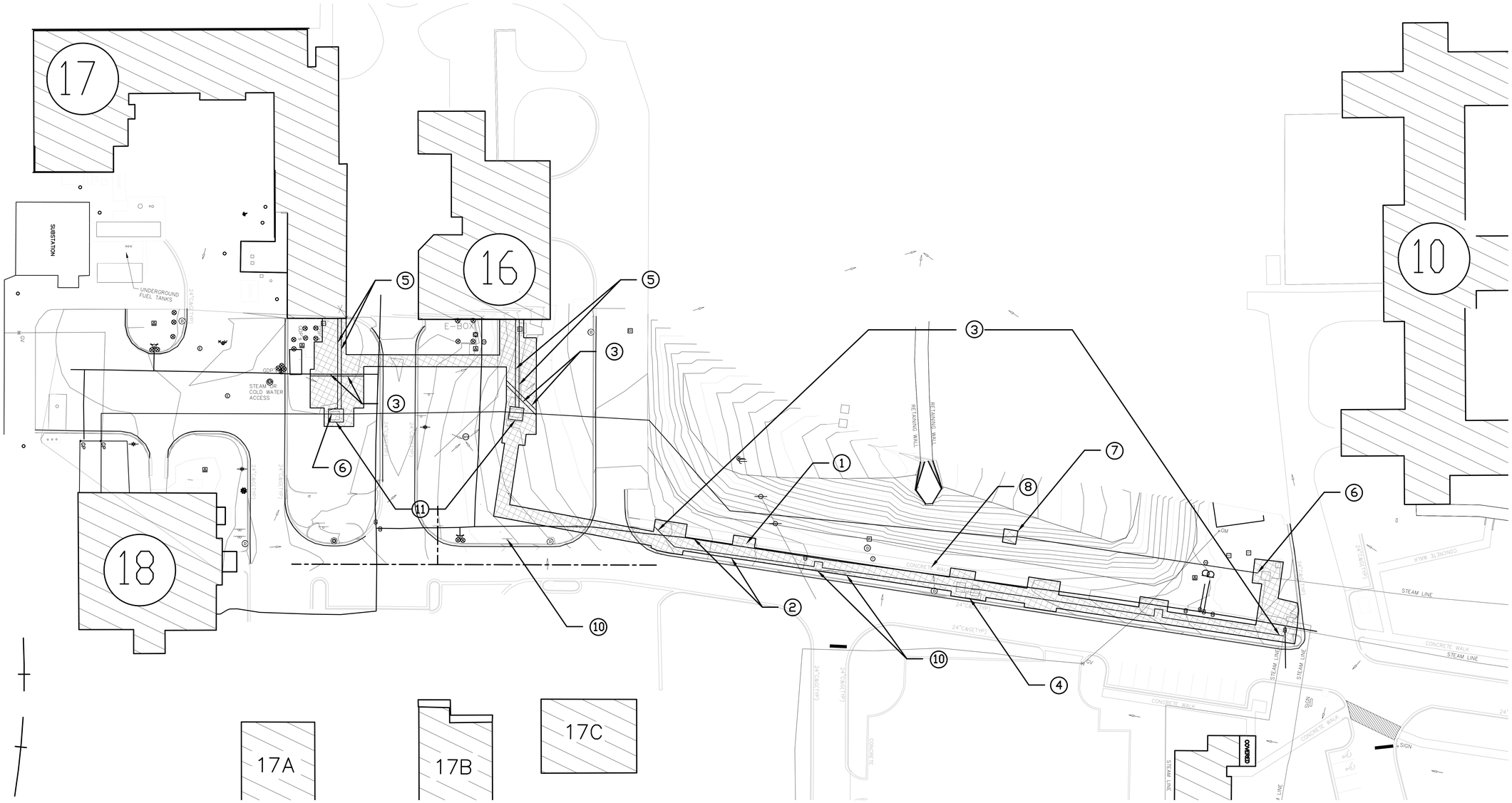


NOTES:

1) AREA OF INTEREST FOR STEAM LINE REPLACEMENT. EXCAVATE & TRENCH 4,014 CY OF IN–SITU MATERIAL. LEAVE UNDERGROUND UTILITIES IN PLACE UNLESS NOTED FOR REMOVAL.
2) BOUNDARY EXTENTS FOR GROUND EXCAVATION AND TRENCHING TO REMOVE & REPLACE STEAM LINE.
3) 526 LF OF 1965 STEAM LINE TO BE ABATED (BOTH 10–IN HPS AND 6–IN PC, REMOVED AND REPLACED WITH NEW STEAM LINE.
4) REMOVE DURING CONSTRUCTION OF THE NEW STEAM LINE AFTER REMOVING THE 1965 STEAM.
5) ABATE, REMOVE, AND REPLACE LINE THAT CONNECTS THE BUILDING TO THE MAIN STEAM LINE. THE TOTAL LINE ABATEMENT, REMOVAL, & REPLACEMENT FOR LATERALS CONNECTING TO BUILDINGS 16 & 17 FROM MANHOLES 16A & 17B RESPECTIVELY ARE: 285 LF OF 1–IN STEEL PIPE WITH 2–IN INSULATION.
6) DECOMMISSION 1980S STEAM LINE AND ABANDON IN PLACE AFTER THE NEW STEAM LINE IS FULLY CONSTRUCTED AND CONNECTED INTO THE STEAM LOOP.
7) DEMOLISH 1980S UTILITY ACCESS (3) TO ABANDONED 1980S STEAM LINE.
8) REMOVE AND REPLACE SIDEWALK PANELS AS NEEDED IN ORDER TO ACCESS/DEMOLISH AREAS FOR NEW STEAM LINE CONSTRUCTION.
9) ALL AREAS (LANDSCAPE, ROADWAY, CURBS & GUTTERS, AND SIDEWALKS) THAT ARE IN THE PATH OF THE NEW STEAM LINE WILL REQUIRE TO BE REPLACED AS NEW.
10) REMOVE AND STORE ALL SIGNS WITHIN DEMOLITION AREA. REINSTALL SIGNS AFTER COMPLETION OF CONSTRUCTION.
11) DEMOLISH AND REMOVE EXISTING MH–16A AND MH–17B.

0 30 60 Feet

Scale: 1"=30-0"

| Revisions | Date |
|---|---|
| | |

CONSULTANT

ALPHA & TERRA
architecture engineering environment

ARCHITECT/ENGINEER OF RECORD

2014-2024 10TH ANNIVERSARY
Above Group
ENGINEERING | DESIGN | CONSULTING
SDVOSB
www.abovegroupinc.com
COA/CA Lic. No. 31120
305 East Dr., Suite H,
Melbourne, Florida 32904
PH: 321.345.9026

STAMP

STATE OF TEXAS
F-8920
HAROLD E. VON DANN, JR.
92737
PROFESSIONAL ENGINEER
9-30-24

Office of Construction and Facilities Management

VA U.S. Department of Veterans Affairs

| Drawing Title | Phase | Project Title | Project Number |
|---|---|---|---|
| DEMOLITION PLAN | 100% CONSTRUCTION DOCUMENTS | STEAM LINE REPLACEMENT | 659-24-903 |
| | | | Building Number |
| Approved: | | Location: SALISBURY, NC VA | Drawing Number |
| | | Issue Date: 7/15/2024 · Checked: KVD · Drawn: KVD | C-4 |

File Path

VA FORM 08 - 6231

7/15/2024 11:53:43 AM

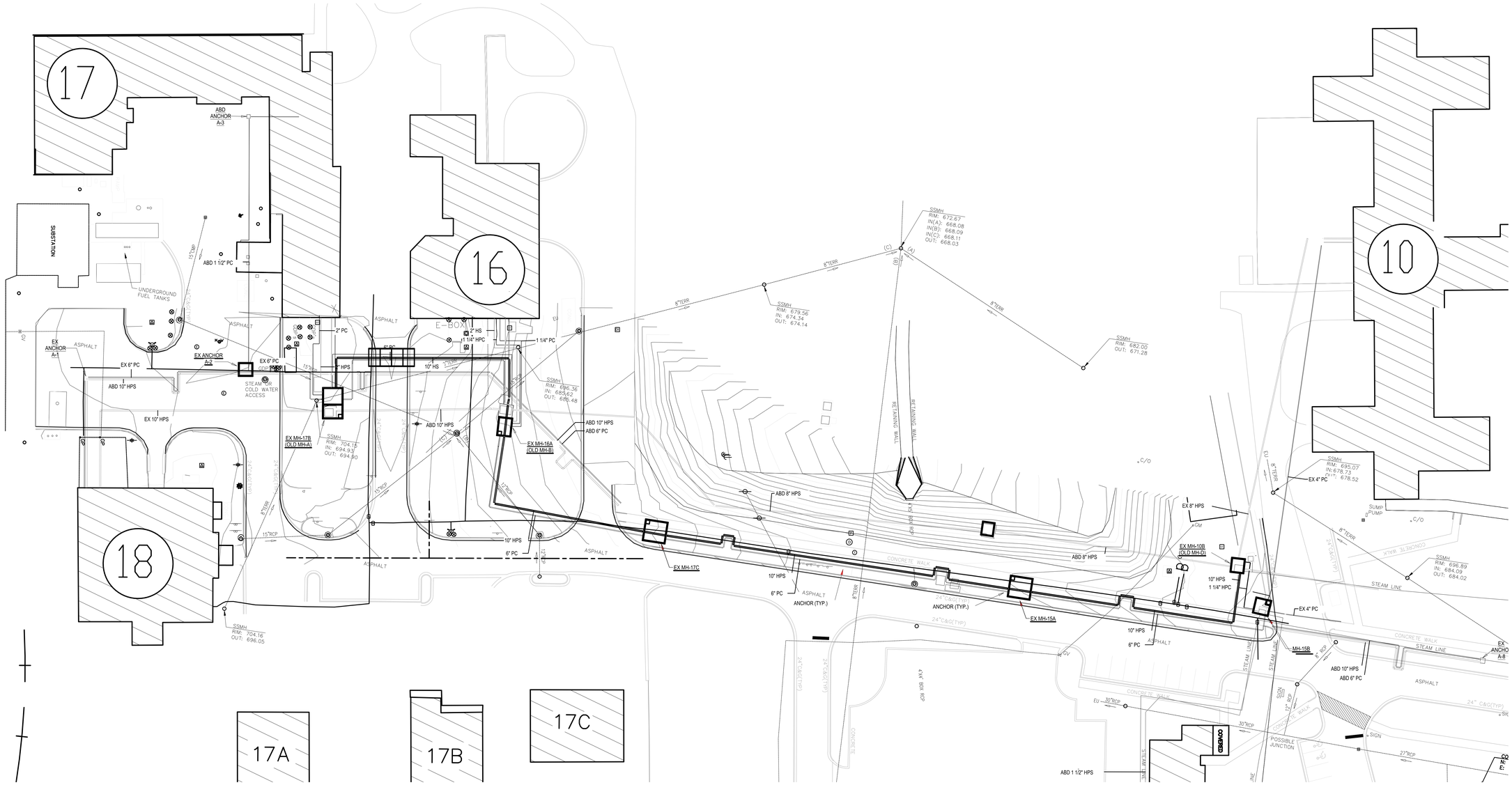


NOTES:

1) THE 10–IN SEAMLESS CARBON STEEL SCHEDULE 40 LINE WITH 2–IN NON–ACM THERMAL INSULATION AND 1–IN HIGH TEMPERATURE POLYISOCYANURATE FOAM. THE CONDUIT SHALL BE 10 GAGE STEEL WITH AN HDPE OUTER INSULATION JACKET.
2) UNDERGROUND WARNING TAPE WILL BE BURIED ABOVE THE PIPE DURING THE TRENCH BACKFILLING APPROXIMATELY 1–FT BELOW GRADE.
3) EACH UTILITY ACCESS (MANHOLE) WILL INCLUDE A SUMP PUMP SO THAT CONDENSATE WILL BE PUMPED OUT VIA TRUCK AND DISPOSED OF PROPERLY.
4) EACH UTILITY ACCESS WILL HAVE TWO DOORS TO ALLOW PROPER VENTILATION.
5) PROVIDE VENTILATION PIPES: ONE WILL TERMINATE 12–IN ABOVE GRADE AND THE OTHER WILL TERMINATE 12–IN BELOW GRADE OF THE CEILING SLAB. BOTH WILL TERMINATE 18–IN ABOVE FINISH GRADE IN A GOOSENECK CONFIGURATION.
6) ALL PIPE FITTINGS SHALL BE INSULATED PER THE "STEAM, HEATING HOT WATER, AND OUTSIDE DISTRIBUTION SYSTEMS DESIGN MANUAL" DATED SEPTEMBER 1, 2022.
7) KEEP INTACT AS MUCH AS POSSIBLE ALL LATERALS FROM BUILDINGS 16 & 17. ABATE AND REMOVE ANY EXCESS STEAM LINE GOING TO UTILITY ACCESS NEAR EACH BUILDING.
8) ALL EXPANSION LOOPS AND ANCHORS ARE SUBJECT TO CHANGE BASED UPON MANUFACTURER'S PROVIDED CALCULATIONS EXCEPT FOR THE ANCHORS LOCATED 2–FT UPSTREAM FROM THE UTILITY ACCESS (MANHOLES).

0 30 60 Feet

Scale: 1"=30-0"

| Revisions | Date |
|---|---|
| | |

CONSULTANT

ALPHA TERRA
architecture engineering environment

ARCHITECT/ENGINEER OF RECORD

2014-2024 10TH ANNIVERSARY
Above Group
ENGINEERING | DESIGN | CONSULTING
www.abovegroupinc.com
COA/CA Lic. No. 31120
305 East Dr., Suite H,
Melbourne, Florida 32904
PH: 321.345.9026

STAMP

STATE OF TEXAS
HAROLD E. VON DRAN
92737
PROFESSIONAL ENGINEER
F-8920
9-30-24

Office of Construction and Facilities Management

VA U.S. Department of Veterans Affairs

| Drawing Title | Phase | Project Title | Project Number |
|---|---|---|---|
| SITE PLAN | 100% CONSTRUCTION DOCUMENTS | STEAM LINE REPLACEMENT | 659-24-903 |
| Approved: | | Location: SALISBURY, NC VA | Building Number |
| | | Issue Date: 7/15/2024 · Checked: KVD · Drawn: KVD | Drawing Number: C-5 |

File Path

VA FORM 08 - 6231

7/15/2024 11:53:43 AM

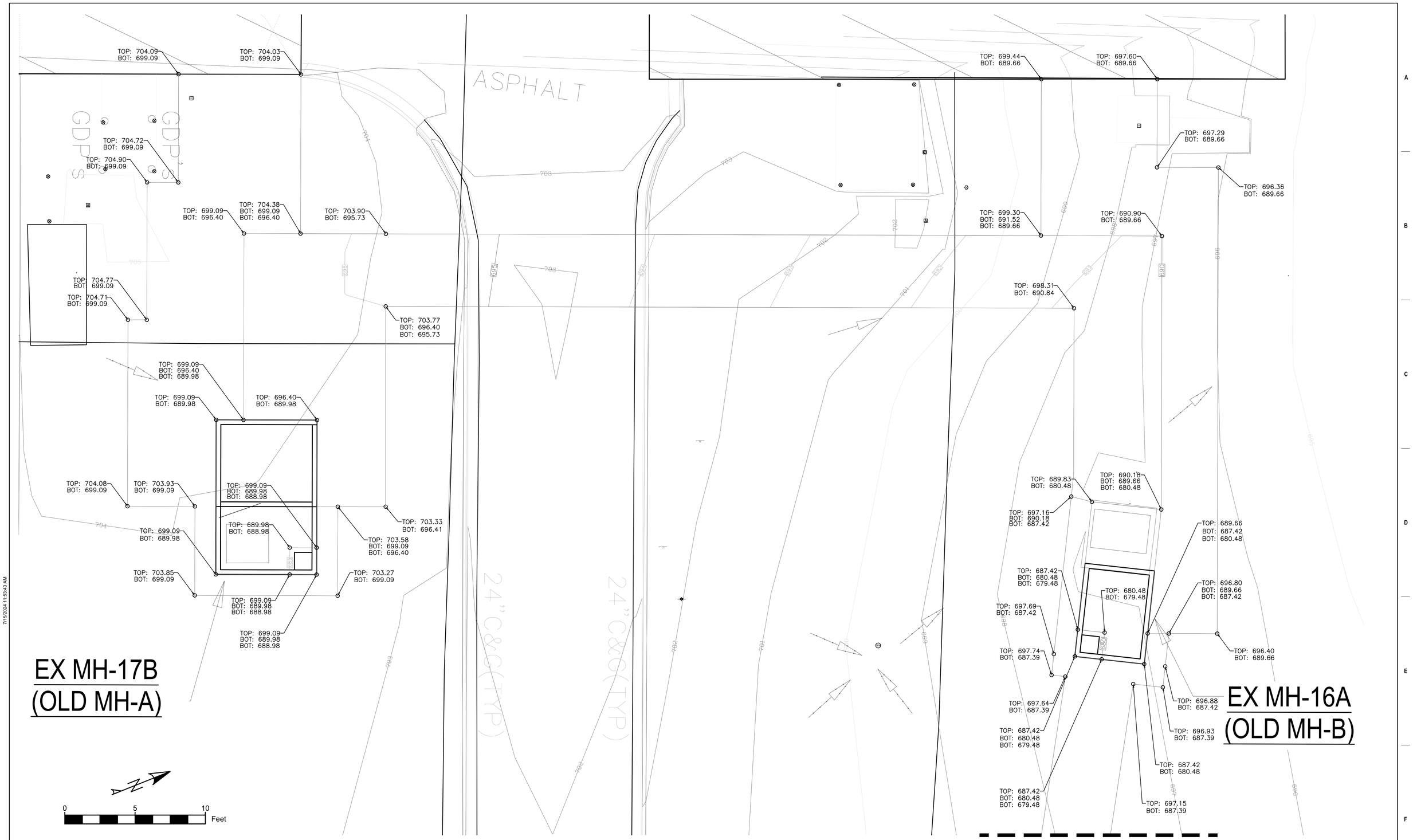


Scale: 1"=5-0"

| | | | |
|---|---|---|---|
| CONSULTANT: ALPHA TERRA architecture engineering environment | ARCHITECT/ENGINEER OF RECORD: 2014-2024 10TH ANNIVERSARY Above Group ENGINEERING \| DESIGN \| CONSULTING; www.abovegroupinc.com COA/CA Lic. No. 31120; 305 East Dr., Suite H, Melbourne, Florida 32904 PH: 321.345.9026 | STAMP: STATE OF TEXAS, KEVIN VON DRAN, 92737, LICENSED PROFESSIONAL ENGINEER; E-8920; 9-30-24 | Office of Construction and Facilities Management; VA U.S. Department of Veterans Affairs |

| Drawing Title | Phase | Project Title | Project Number |
|---|---|---|---|
| GRADING PLAN | 100% CONSTRUCTION DOCUMENTS | STEAM LINE REPLACEMENT | 659-24-903 |
| Approved: | | Location: SALISBURY, NC VA | Building Number |
| | | Issue Date: 7/15/2024; Checked: KVD; Drawn: KVD | Drawing Number: C-7.01 |

Revisions | Date

File Path

7/15/2024 11:53:43 AM

VA FORM 08 - 6231

Scale: 1"=5-0"

| Revisions | Date |
|---|---|
| | |

File Path

CONSULTANT

ALPHA TERRA
architecture engineering environment

ARCHITECT/ENGINEER OF RECORD

2014-2024 10TH ANNIVERSARY
Above Group
ENGINEERING | DESIGN | CONSULTING
SDVOSB SVA
www.abovegroupinc.com
COA/CA Lic. No. 31120
305 East Dr., Suite H,
Melbourne, Florida 32904
PH: 321.345.9026

STAMP

STATE OF TEXAS
F-8920
HAROLD E. VON DANN, JR.
92737
LICENSED
PROFESSIONAL ENGINEER
9-30-24

Office of Construction and Facilities Management

VA U.S. Department of Veterans Affairs

| Drawing Title | Phase | Project Title | Project Number |
|---|---|---|---|
| GRADING PLAN | 100% CONSTRUCTION DOCUMENTS | STEAM LINE REPLACEMENT | 659-24-903 |
| Approved: | | Location: SALISBURY, NC VA | Building Number |
| | | Issue Date: 7/15/2024 · Checked: KVD · Drawn: KVD | Drawing Number: C-7.02 |

VA FORM 08 - 6231

7/15/2024 11:53:43 AM

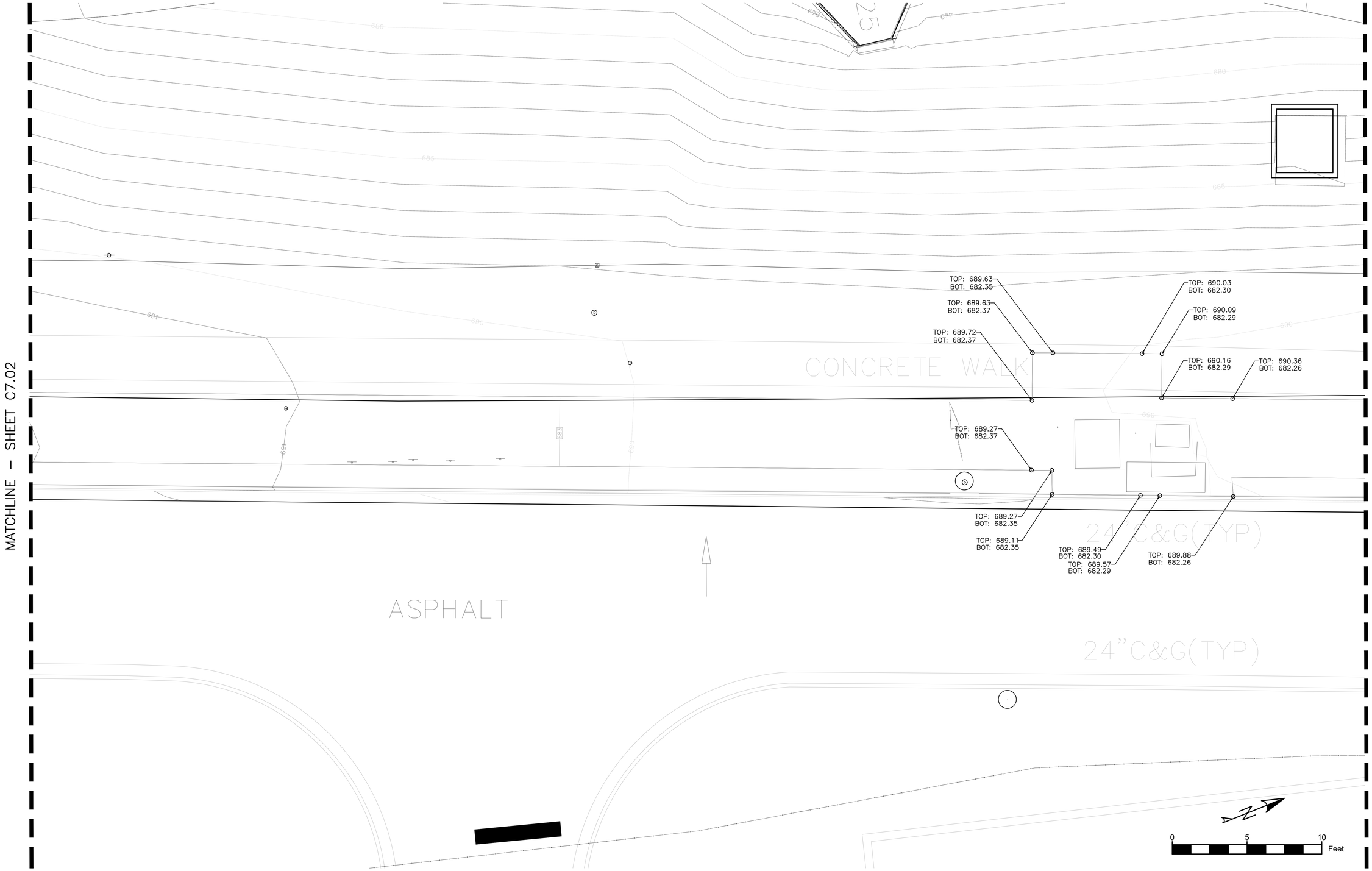


Scale: 1"=5-0"

| Revisions | Date |
|---|---|
| | |

CONSULTANT

ALPHA TERRA
architecture engineering environment

ARCHITECT/ENGINEER OF RECORD

2014-2024 10TH ANNIVERSARY
Above Group
ENGINEERING | DESIGN | CONSULTING
SDVOSB
www.abovegroupinc.com
COA/CA Lic. No. 31120
305 East Dr., Suite H,
Melbourne, Florida 32904
PH: 321.345.9026

STAMP

STATE OF TEXAS
HAROLD E. VON DRAN
92737
LICENSED
PROFESSIONAL ENGINEER
5-8920
9-30-24

Office of Construction and Facilities Management

VA U.S. Department of Veterans Affairs

| | | | |
|---|---|---|---|
| Drawing Title: GRADING PLAN | Phase: 100% CONSTRUCTION DOCUMENTS | Project Title: STEAM LINE REPLACEMENT | Project Number: 659-24-903 |
| Approved: | | Location: SALISBURY, NC VA | Building Number: |
| | | Issue Date: 7/15/2024 · Checked: KVD · Drawn: KVD | Drawing Number: C-7.03 |

File Path

VA FORM 08 - 6231

7/15/2024 11:53:43 AM

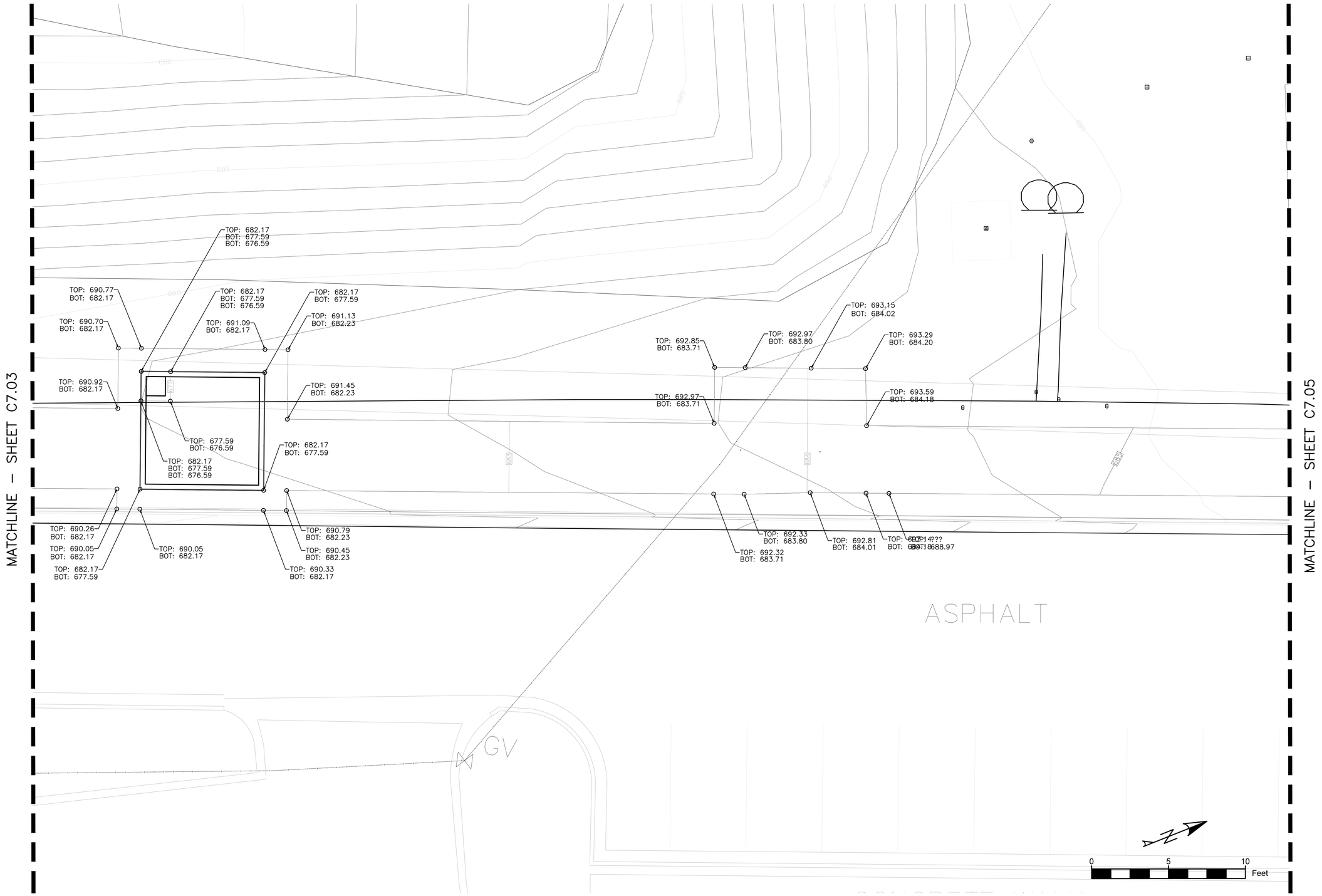


Scale: 1"=5-0"

| CONSULTANT | ARCHITECT/ENGINEER OF RECORD | STAMP | Office of Construction and Facilities Management | Drawing Title | Phase | Project Title | Project Number |
|---|---|---|---|---|---|---|---|
| ALPHA α TERRA architecture engineering environment | 2014-2024 10TH ANNIVERSARY Above Group ENGINEERING \| DESIGN \| CONSULTING<br>www.abovegroupinc.com<br>COA/CA Lic. No. 31120<br>305 East Dr., Suite H, Melbourne, Florida 32904<br>PH: 321.345.9026 | STATE OF TEXAS HAROLD E. VON DANN 92737 PROFESSIONAL ENGINEER F-8920<br>9-30-24 | VA U.S. Department of Veterans Affairs | GRADING PLAN | 100% CONSTRUCTION DOCUMENTS | STEAM LINE REPLACEMENT | 659-24-903 |
| | | | | Approved: | | Location: SALISBURY, NC VA | Building Number |
| | | | | | | Issue Date: 7/15/2024 · Checked: KVD · Drawn: KVD | Drawing Number: C-7.04 |

Revisions | Date

File Path

VA FORM 08 - 6231

7/15/2024 11:53:43 AM

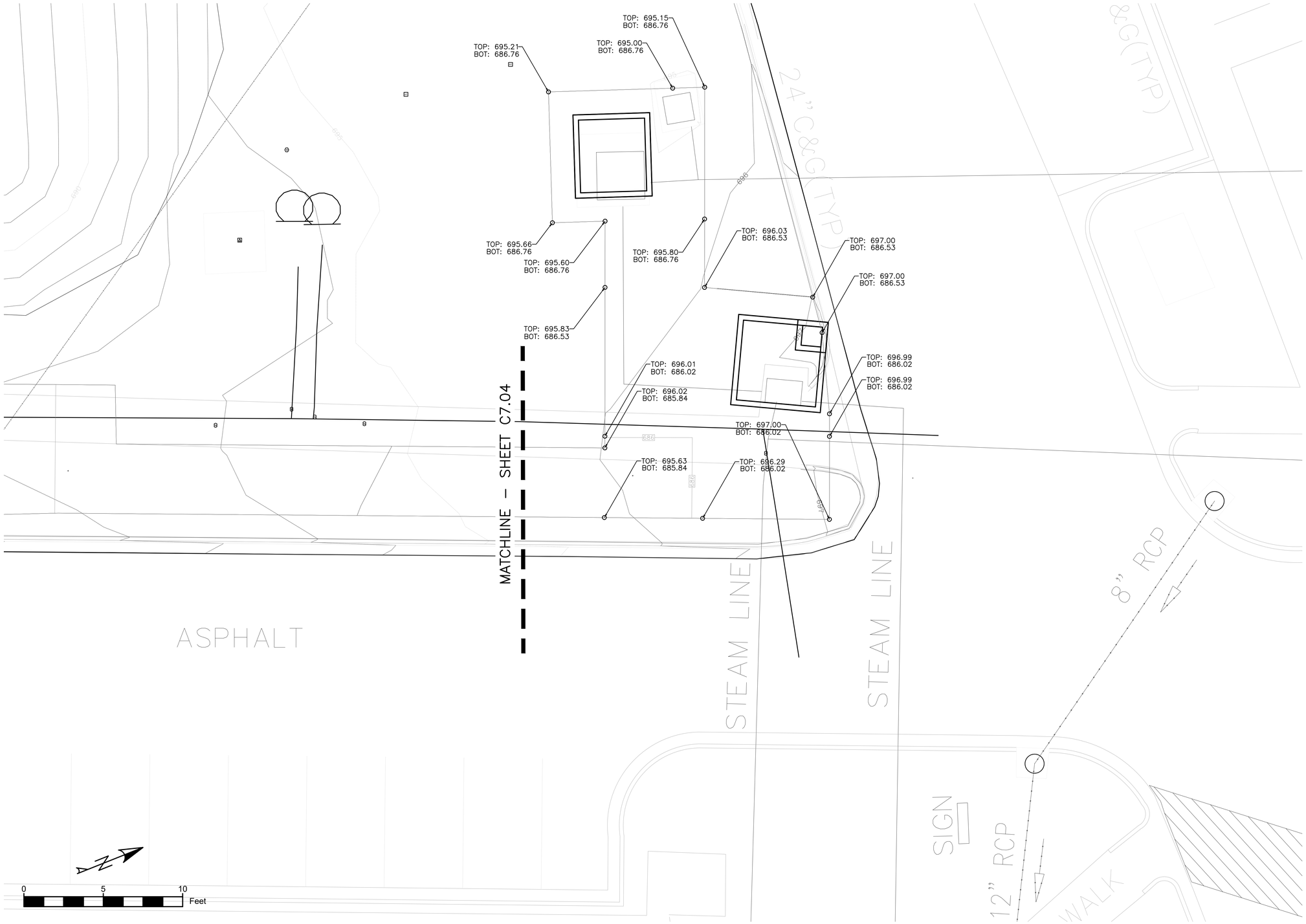


Scale: 1"=5-0"

| Revisions | Date |
|---|---|
| | |

File Path

CONSULTANT

ALPHA α TERRA
architecture engineering environment

ARCHITECT/ENGINEER OF RECORD

2014-2024 10TH ANNIVERSARY
Above Group
ENGINEERING | DESIGN | CONSULTING
SDVOSB

www.abovegroupinc.com
COA/CA Lic. No. 31120

305 East Dr., Suite H,
Melbourne, Florida 32904
PH: 321.345.9026

STAMP

STATE OF TEXAS
F-8920
HAROLD F. VON DREHLE, JR.
92737
LICENSED
PROFESSIONAL ENGINEER
9-30-24

Office of Construction and Facilities Management

VA U.S. Department of Veterans Affairs

Drawing Title: GRADING PLAN

Approved:

Phase: 100% CONSTRUCTION DOCUMENTS

Project Title: STEAM LINE REPLACEMENT

Project Number: 659-24-903

Building Number:

Location: SALISBURY, NC VA

Issue Date: 7/15/2024

Checked: KVD

Drawn: KVD

Drawing Number: C-7.05

VA FORM 08 - 6231

7/15/2024 11:53:43 AM

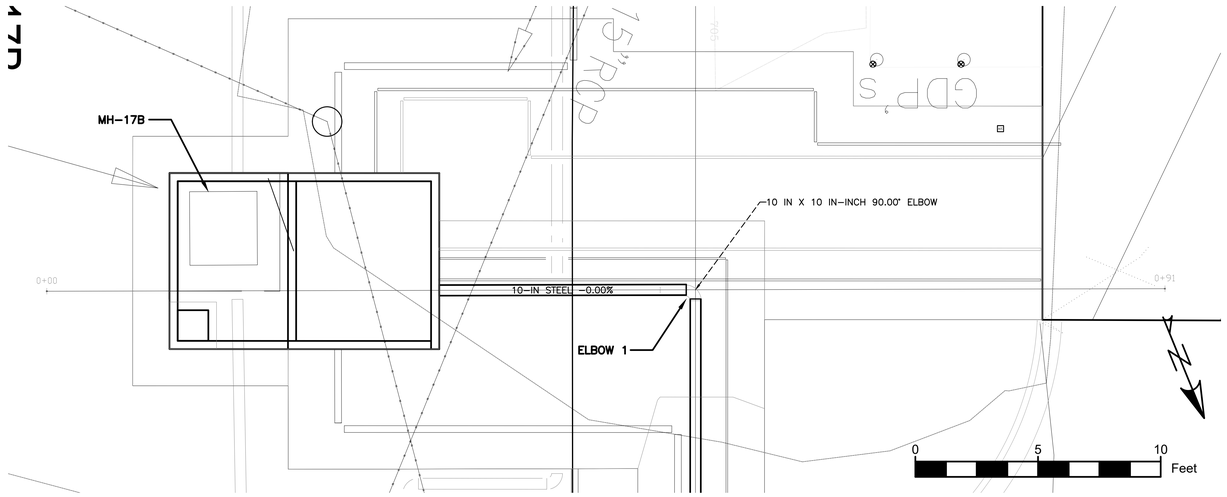


1 - 10-IN STEAM - ELBOW 1 TO ELBOW 2

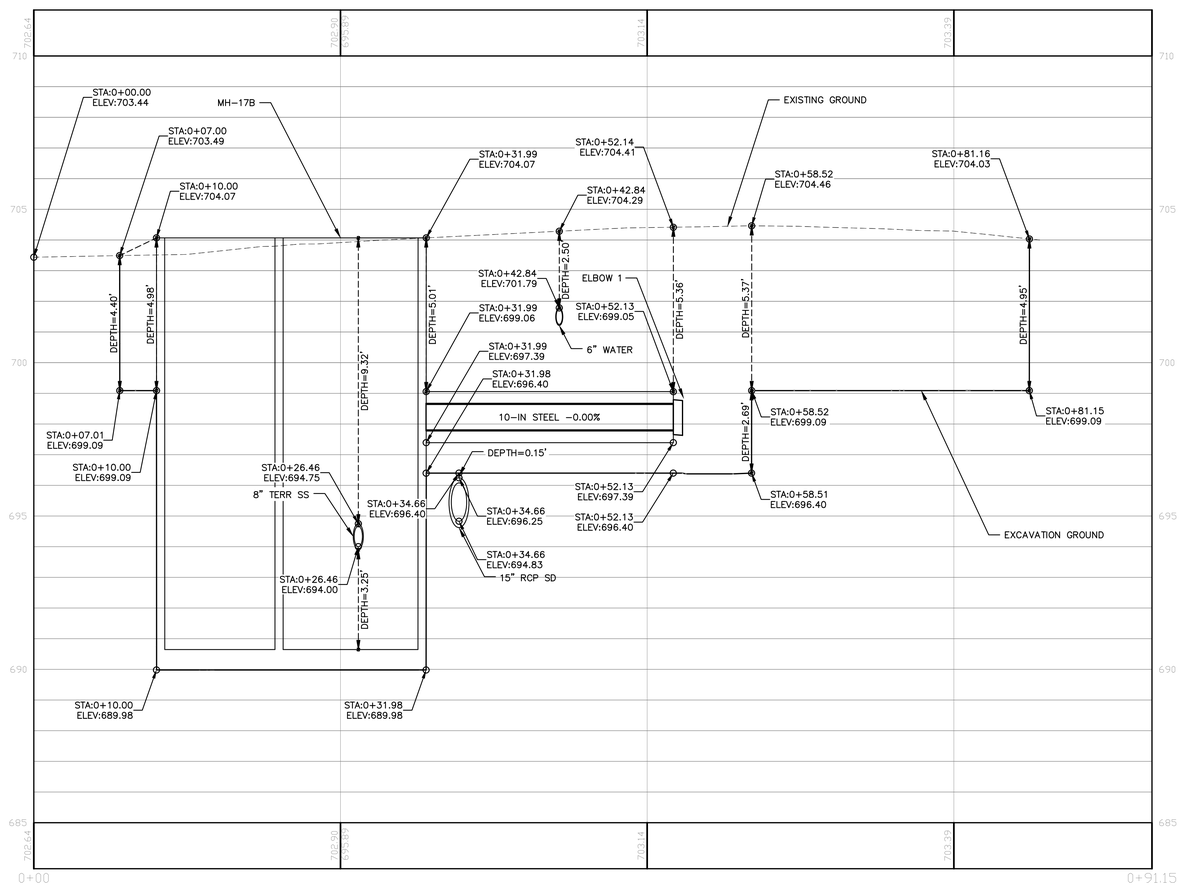


Scale: 1"=5-0"

| CONSULTANT | ARCHITECT/ENGINEER OF RECORD | STAMP | Office of Construction and Facilities Management | Drawing Title | Phase | Project Title | Project Number |
|---|---|---|---|---|---|---|---|
| ALPHA TERRA architecture engineering environment | 2014-2024 10TH ANNIVERSARY Above Group ENGINEERING \| DESIGN \| CONSULTING; SDVOSB; www.abovegroupinc.com COA/CA Lic. No. 31120; 305 East Dr., Suite H, Melbourne, Florida 32904 PH: 321.345.9026 | STATE OF TEXAS F-8920 THOMAS E. VON EHREN 92737 PROFESSIONAL ENGINEER 9-30-24 | VA U.S. Department of Veterans Affairs | UTILITY PLAN | 100% CONSTRUCTION DOCUMENTS | STEAM LINE REPLACEMENT | 659-24-903 |
| | | | | Approved: | | Location: SALISBURY, NC VA | Building Number |
| | | | | | | Issue Date 7/15/2024; Checked KVD; Drawn KVD | Drawing Number C-8.01 |

Revisions | Date

File Path

7/15/2024 11:53:43 AM

VA FORM 08 - 6231

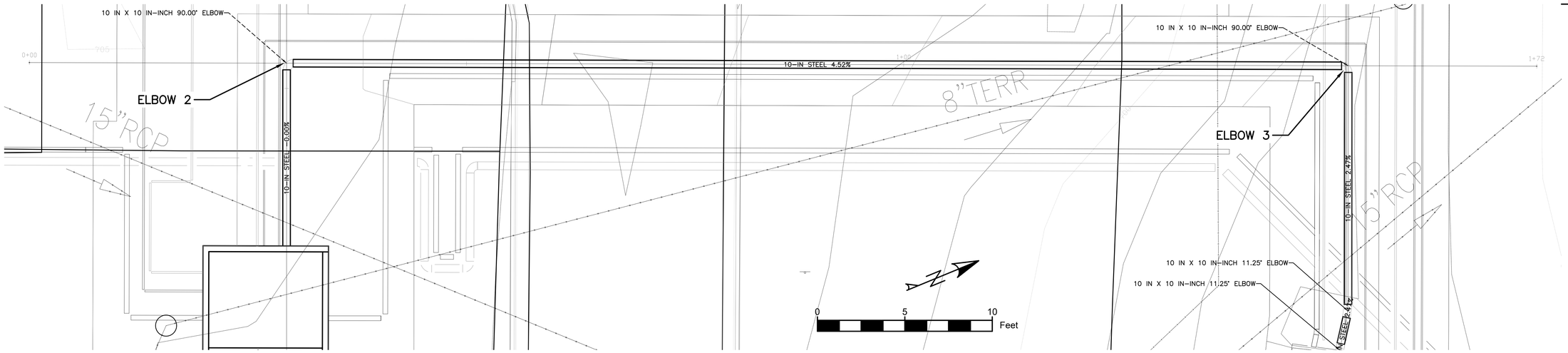


## 2 – 10-IN STEAM – ELBOW 2 TO ELBOW 3

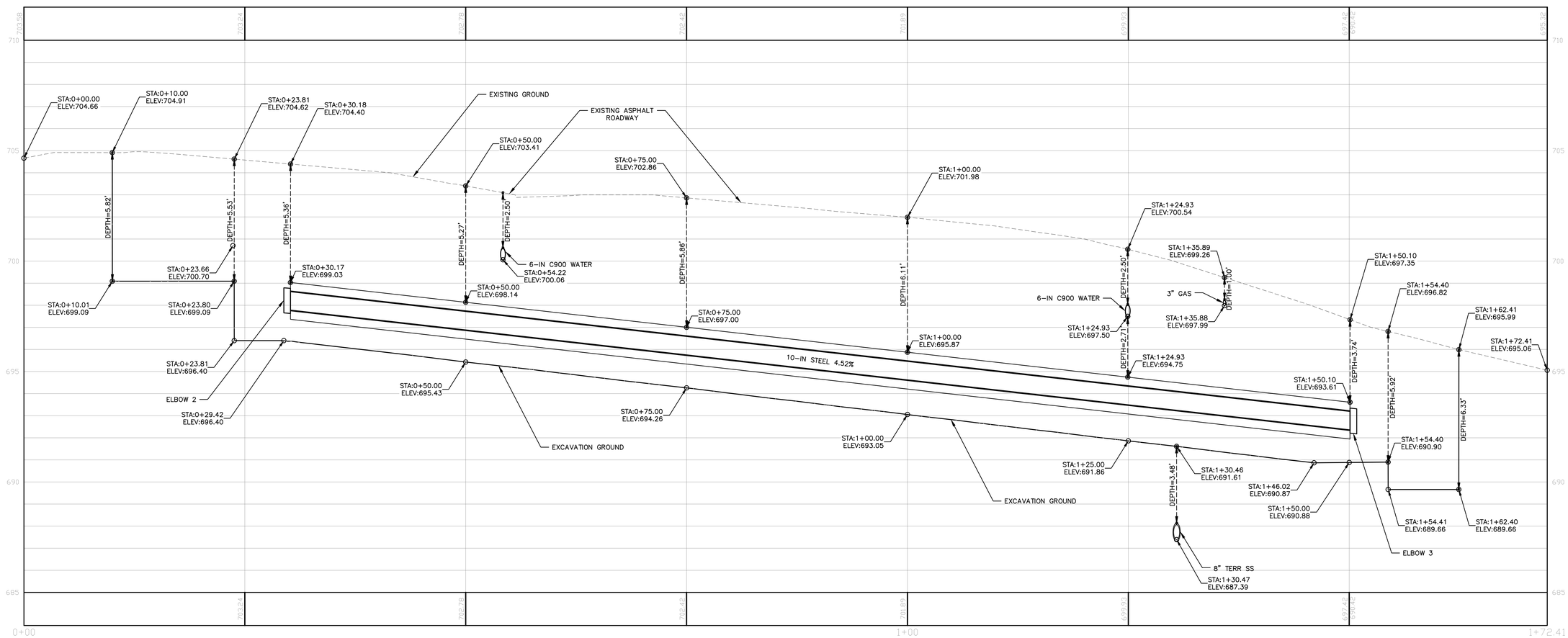


7/15/2024 11:53:43 AM

File Path

| Revisions | Date |
|---|---|
| | |

VA FORM 08 - 6231

**CONSULTANT**

ALPHA TERRA
architecture engineering environment

**ARCHITECT/ENGINEER OF RECORD**

2014-2024 10TH ANNIVERSARY
Above Group
ENGINEERING | DESIGN | CONSULTING
SDVOSB CVE
www.abovegroupinc.com
COA/CA Lic. No. 31120
305 East Dr., Suite H,
Melbourne, Florida 32904
PH: 321.345.9026

**STAMP**

STATE OF TEXAS
MICHAEL E. VON DRAN
92737
LICENSED
PROFESSIONAL ENGINEER
E-8920
9-30-24

Office of Construction and Facilities Management

VA U.S. Department of Veterans Affairs

Scale: 1"=5-0"

| Drawing Title | Phase | Project Title | Project Number |
|---|---|---|---|
| UTILITY PLAN | 100% CONSTRUCTION DOCUMENTS | STEAM LINE REPLACEMENT | 659-24-903 |
| Approved: | | Location: SALISBURY, NC VA | Building Number |
| | | Issue Date: 7/15/2024 · Checked: KVD · Drawn: KVD | Drawing Number: C-8.02 |

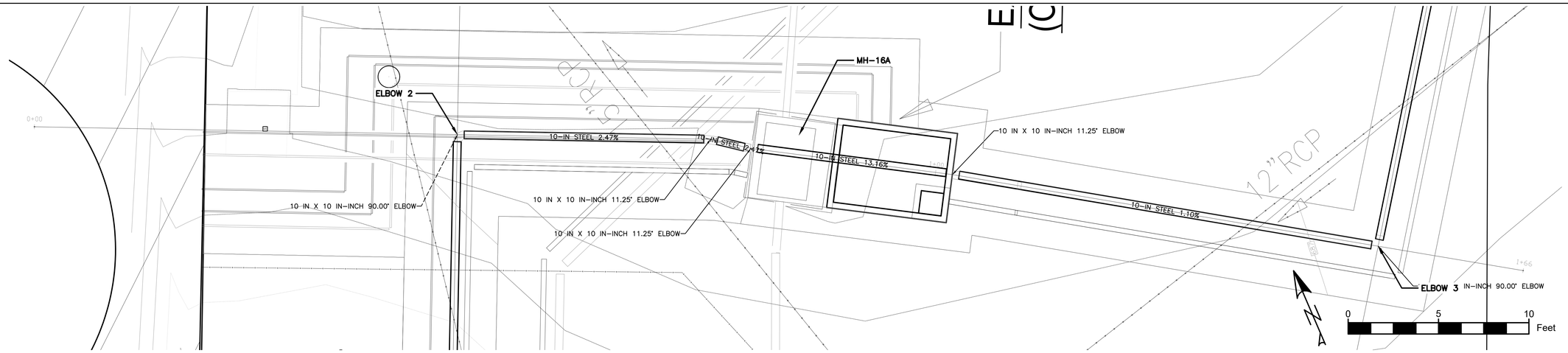


## 3 – 10-IN STEAM – ELBOW 3 TO ELBOW 4

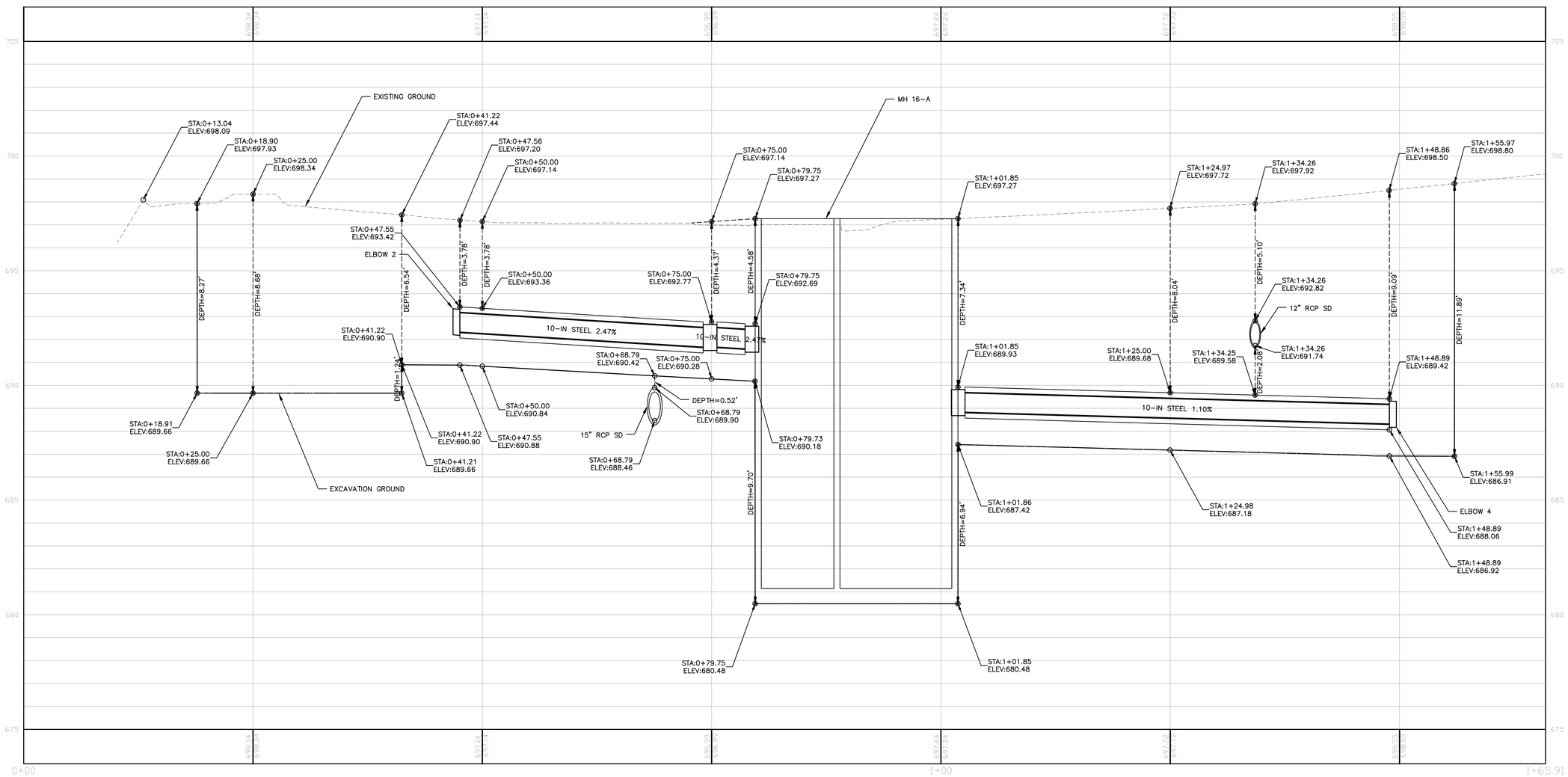


Scale: 1"=5-0"

| CONSULTANT | ARCHITECT/ENGINEER OF RECORD | STAMP | Office of Construction and Facilities Management | Drawing Title | Phase | Project Title | Project Number |
|---|---|---|---|---|---|---|---|
| ALPHA TERRA architecture engineering environment | 2014-2024 10TH ANNIVERSARY Above Group ENGINEERING \| DESIGN \| CONSULTING<br>www.abovegroupinc.com<br>COA/CA Lic. No. 31120<br>305 East Dr., Suite H, Melbourne, Florida 32904<br>PH: 321.345.9026 | STATE OF TEXAS HAROLD E. VON DANN 92737 PROFESSIONAL ENGINEER<br>F-8920<br>9-30-24 | VA U.S. Department of Veterans Affairs | UTILITY PLAN | 100% CONSTRUCTION DOCUMENTS | STEAM LINE REPLACEMENT | 659-24-903 |
| | | | | Approved: | | Location: SALISBURY, NC VA | Building Number |
| | | | | | | Issue Date: 7/15/2024 · Checked: KVD · Drawn: KVD | Drawing Number: C-8.03 |

Revisions | Date

File Path

7/15/2024 11:53:43 AM

VA FORM 08 - 6231

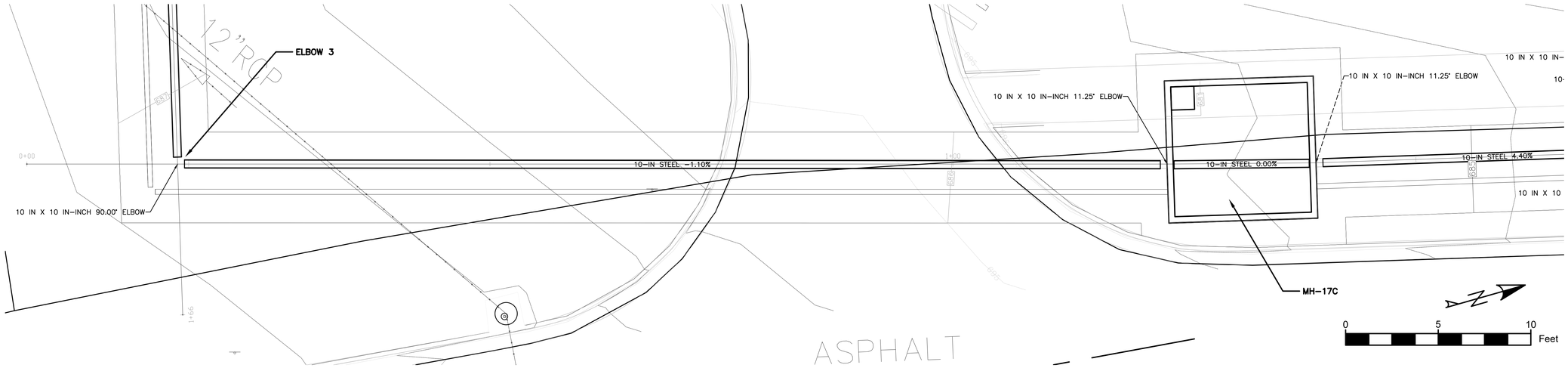


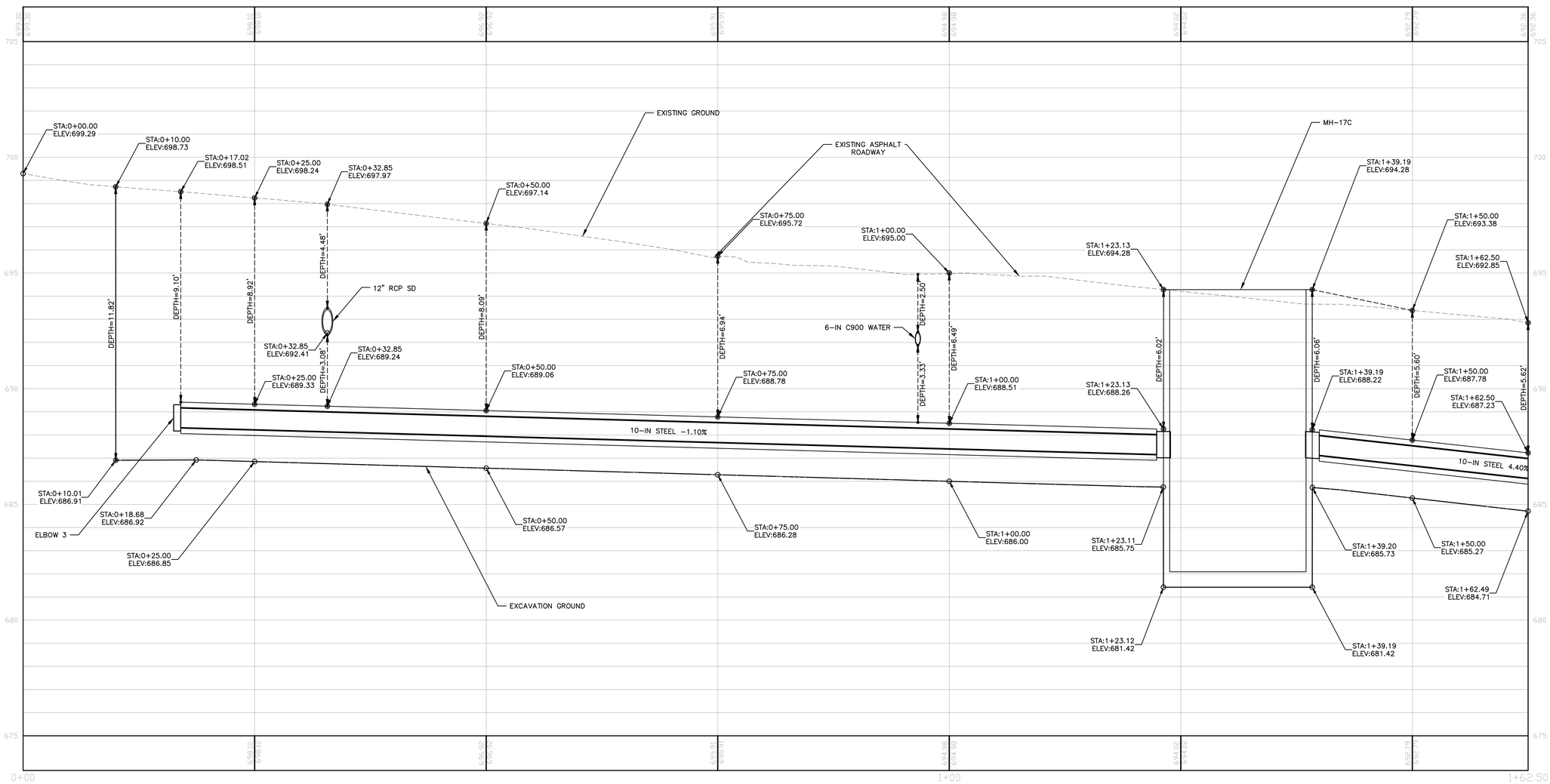


Scale: 1"=5-0"

| Revisions | Date |
|---|---|
| | |

File Path

VA FORM 08 - 6231

**CONSULTANT**

ALPHA TERRA
architecture engineering environment

**ARCHITECT/ENGINEER OF RECORD**

2014-2024 10TH ANNIVERSARY
Above Group
ENGINEERING | DESIGN | CONSULTING
SDVOSB SVA

www.abovegroupinc.com
COA/CA Lic. No. 31120

305 East Dr., Suite H,
Melbourne, Florida 32904
PH: 321.345.9026

**STAMP**

STATE OF TEXAS
HAROLD F. VON EHREN, JR.
92737
LICENSED
PROFESSIONAL ENGINEER
F-8920
9-30-24

Office of Construction and Facilities Management

VA U.S. Department of Veterans Affairs

| Drawing Title | Phase | Project Title | Project Number |
|---|---|---|---|
| UTILITY PLAN | 100% CONSTRUCTION DOCUMENTS | STEAM LINE REPLACEMENT | 659-24-903 |
| Approved: | | Location: SALISBURY, NC VA | Building Number |
| | | Issue Date: 7/15/2024 · Checked: KVD · Drawn: KVD | Drawing Number: C-8.04 |

7/15/2024 11:53:43 AM

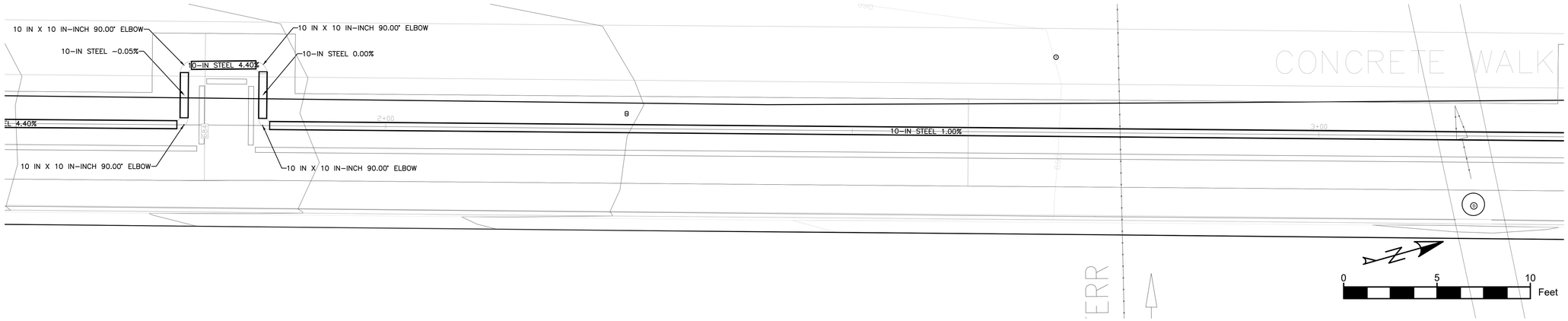


## 4 – 10-IN STEAM – ELBOW 4 TO ELBOW 5

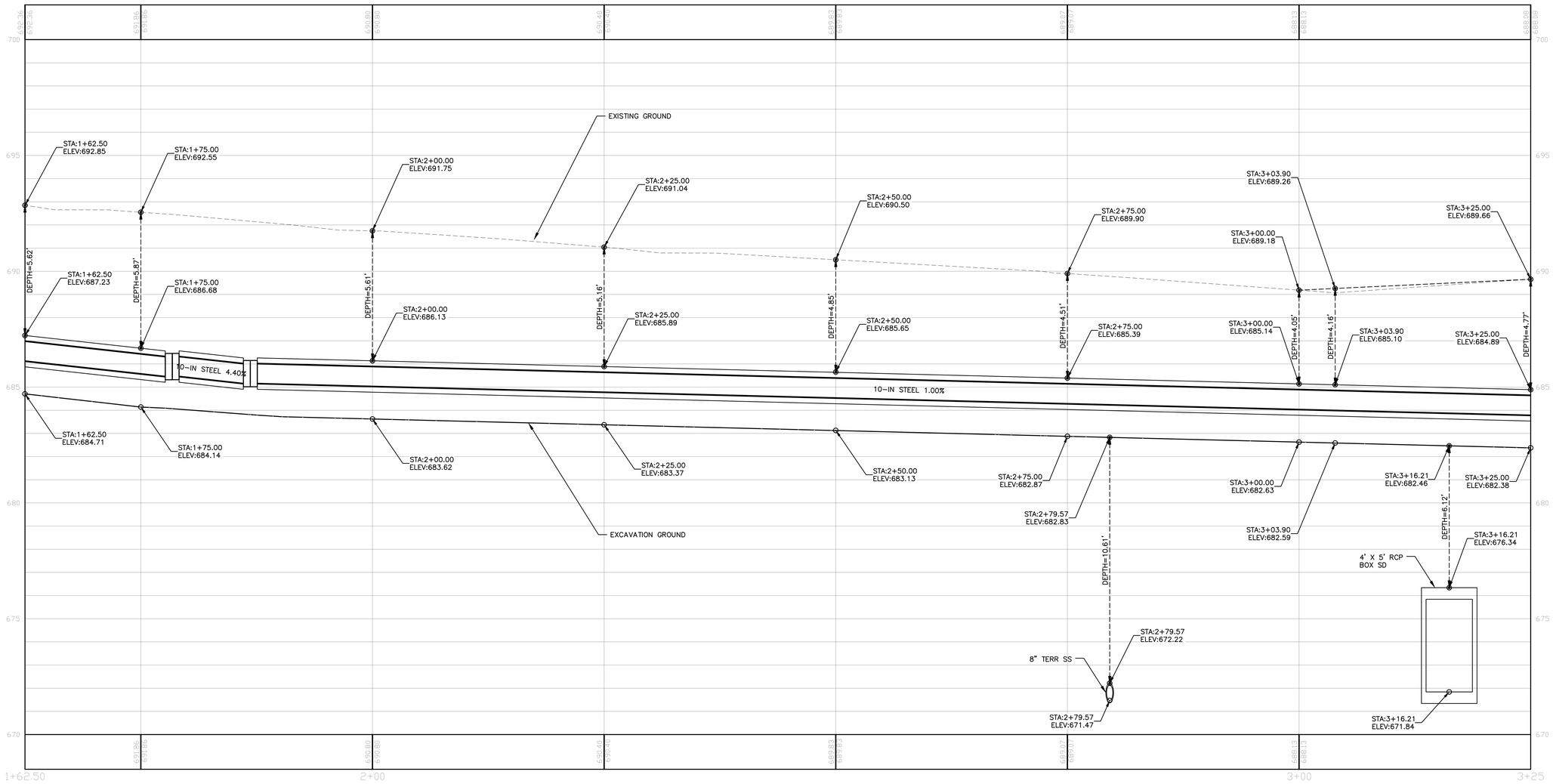


Scale: 1"=5-0"

| Revisions | Date |
|---|---|
| | |

File Path

VA FORM 08 - 6231

**CONSULTANT**

ALPHA TERRA
architecture engineering environment

**ARCHITECT/ENGINEER OF RECORD**

2014-2024 10TH ANNIVERSARY
Above Group
ENGINEERING | DESIGN | CONSULTING
SDVOSB CVE

www.abovegroupinc.com
COA/CA Lic. No. 31120

305 East Dr., Suite H,
Melbourne, Florida 32904
PH: 321.345.9026

**STAMP**

STATE OF TEXAS
HAROLD E. VON DRAN, JR.
92737
LICENSED
PROFESSIONAL ENGINEER
F-8920
9-30-24

Office of Construction and Facilities Management

VA U.S. Department of Veterans Affairs

| Drawing Title | Phase | Project Title | Project Number |
|---|---|---|---|
| UTILITY PLAN | 100% CONSTRUCTION DOCUMENTS | STEAM LINE REPLACEMENT | 659-24-903 |
| Approved: | | Location: SALISBURY, NC VA | Building Number |
| | | Issue Date: 7/15/2024 · Checked: KVD · Drawn: KVD | Drawing Number: C-8.05 |

7/15/2024 11:33:43 AM

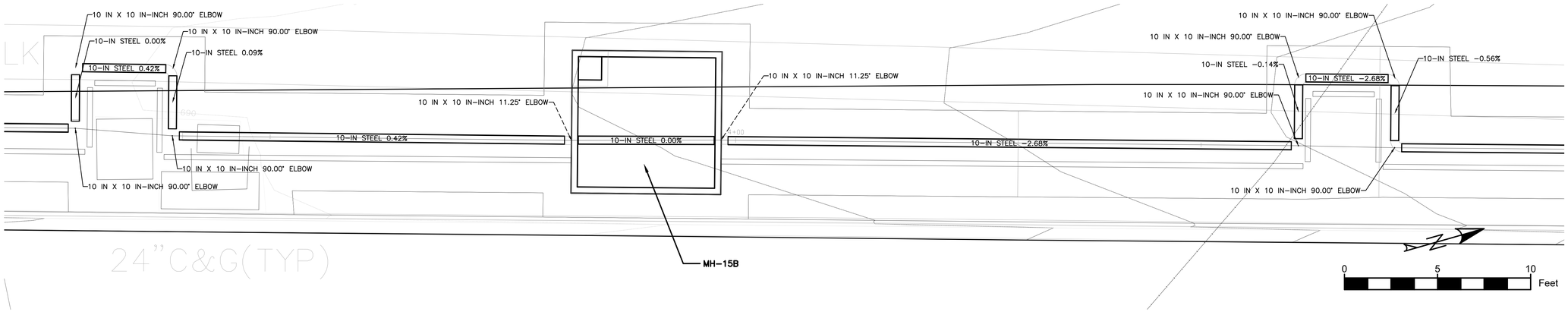


## 4 – 10-IN STEAM – ELBOW 4 TO ELBOW 5

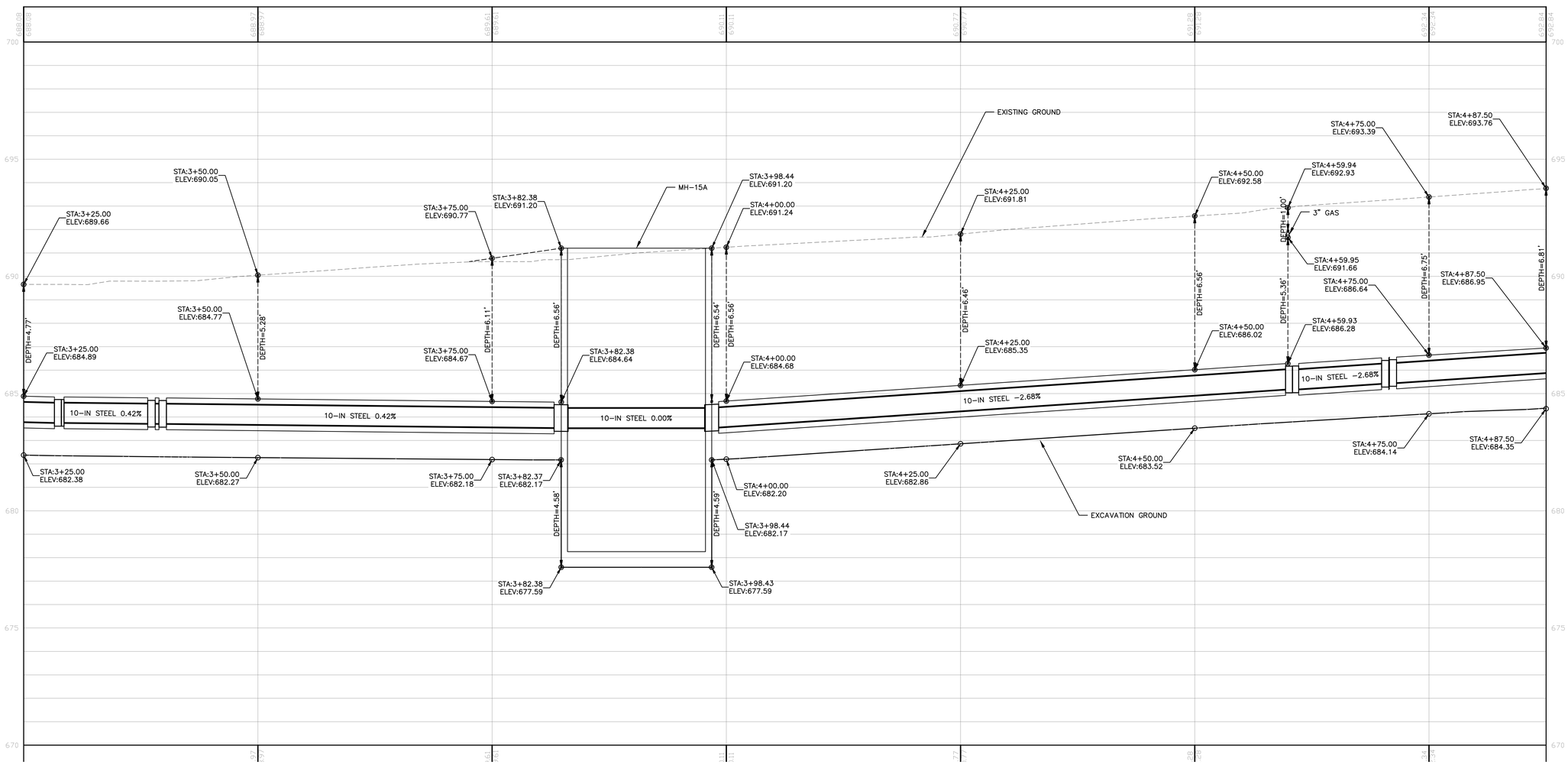


Scale: 1"=5'-0"

| CONSULTANT | ARCHITECT/ENGINEER OF RECORD | STAMP | Office of Construction and Facilities Management | Drawing Title | Phase | Project Title | Project Number |
|---|---|---|---|---|---|---|---|
| ALPHA TERRA architecture engineering environment | 2014-2024 10TH ANNIVERSARY Above Group ENGINEERING \| DESIGN \| CONSULTING<br>www.abovegroupinc.com<br>COA/CA Lic. No. 31120<br>305 East Dr., Suite H, Melbourne, Florida 32904<br>PH: 321.345.9026 | STATE OF TEXAS MICHAEL E. VON DRAN 92737 LICENSED PROFESSIONAL ENGINEER<br>E-8920<br>9-30-24 | VA U.S. Department of Veterans Affairs | UTILITY PLAN | 100% CONSTRUCTION DOCUMENTS | STEAM LINE REPLACEMENT | 659-24-903 |
| | | | | Approved: | | Location: SALISBURY, NC VA | Building Number |
| | | | | | | Issue Date: 7/15/2024 · Checked: KVD · Drawn: KVD | Drawing Number: C-8.06 |

Revisions | Date

File Path

VA FORM 08 - 6231

7/15/2024 11:53:43 AM

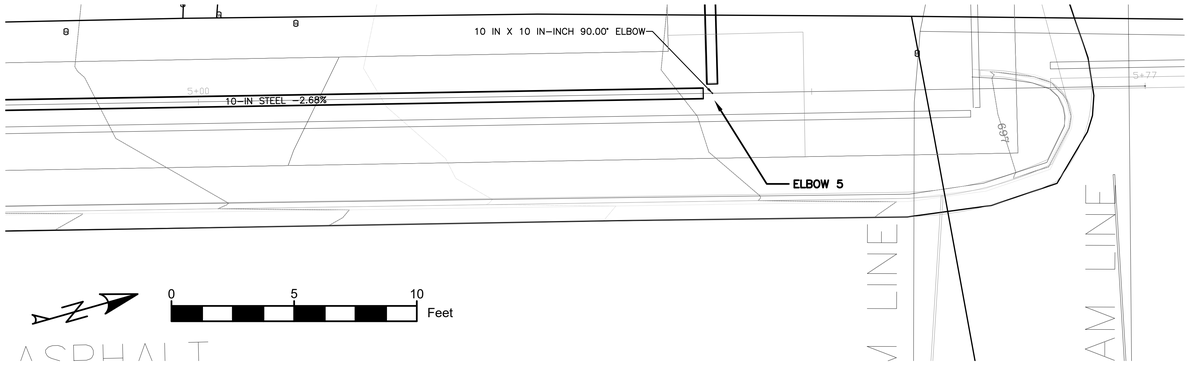


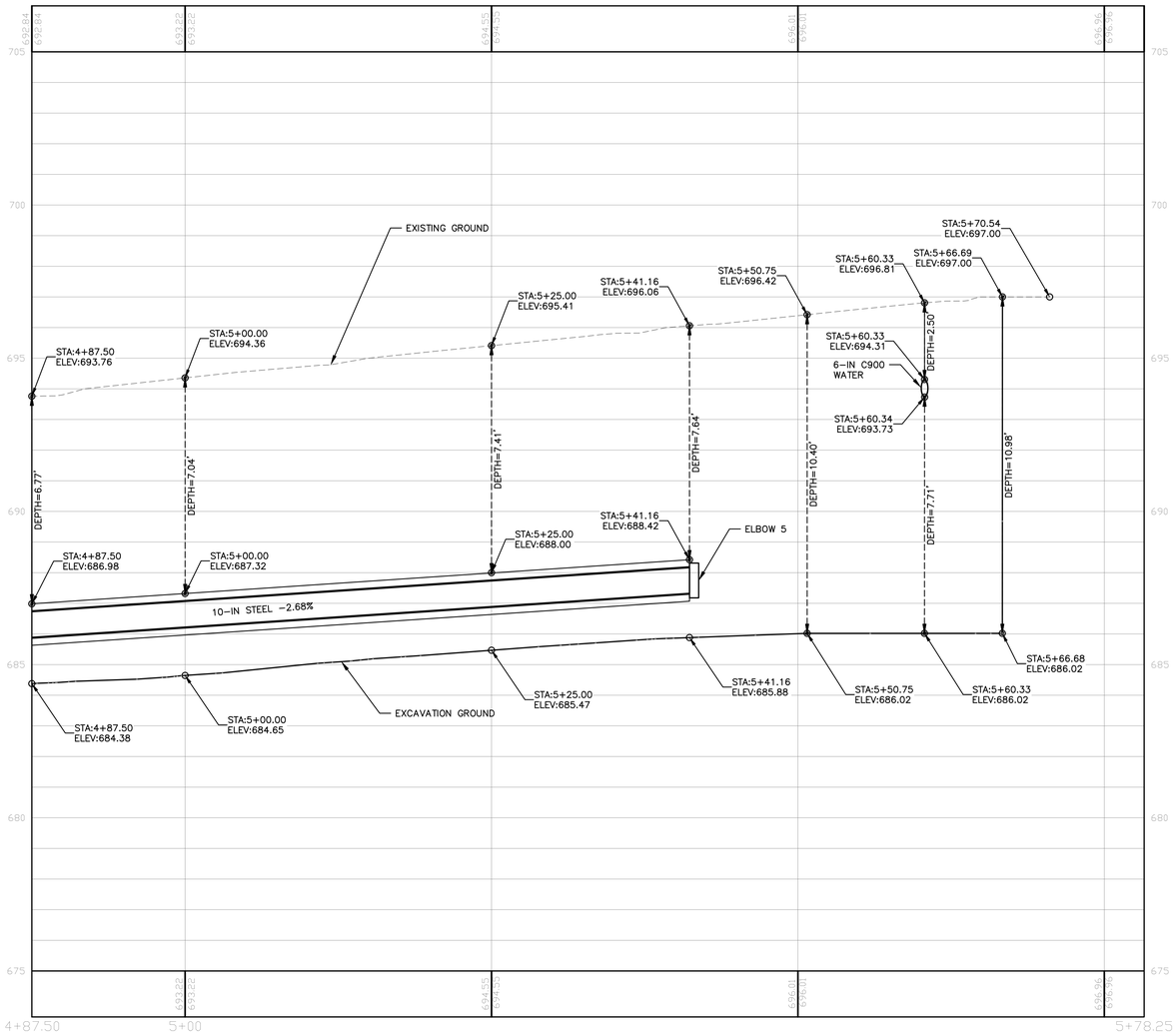


7/15/2024 11:53:43 AM

File Path

| Revisions | Date |
|---|---|
| | |

VA FORM 08 - 6231

CONSULTANT

ALPHA TERRA
architecture engineering environment

ARCHITECT/ENGINEER OF RECORD

2014-2024 10TH ANNIVERSARY
Above Group
ENGINEERING | DESIGN | CONSULTING
SDVOSB CVE

www.abovegroupinc.com
COA/CA Lic. No. 31120

305 East Dr., Suite H,
Melbourne, Florida 32904
PH: 321.345.9026

STAMP

STATE OF TEXAS
DOUGLAS E. VON ERAN
92737
LICENSED
PROFESSIONAL ENGINEER
F-8920
9-30-24

Office of Construction and Facilities Management

VA U.S. Department of Veterans Affairs

Scale: 1"=5-0"

| Drawing Title | Phase | Project Title | Project Number |
|---|---|---|---|
| UTILITY PLAN | 100% CONSTRUCTION DOCUMENTS | STEAM LINE REPLACEMENT | 659-24-903 |
| | | | Building Number |
| Approved: | | Location: SALISBURY, NC VA | Drawing Number |
| | | Issue Date: 7/15/2024 · Checked: KVD · Drawn: KVD | C-8.07 |

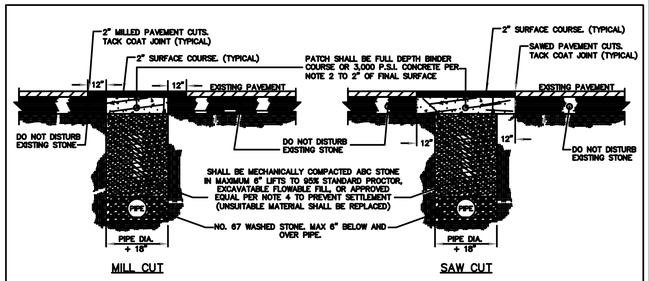


NOTES:
1. ALL PAVEMENT CUTS SHALL BE REPAIRED WITHIN A MAXIMUM OF TEN (10) DAYS FROM THE DATE THE CUT IS MADE.
2. CONCRETE TRENCH CAP ON ASPHALT STREETS SHALL BE USED ONLY DURING INCLEMENT WEATHER WHEN ASPHALT PLANTS ARE NOT OPERATING.
3. IN ALL OPEN TRENCHES, BACKFILL SHALL BE COMPACTED TO 95% MAXIMUM DRY DENSITY. THE CONTRACTOR SHALL BE RESPONSIBLE FOR VERIFYING COMPACTION REQUIREMENTS BY SOILS TESTING CERTIFIED BY A LICENSED PROFESSIONAL GEOTECHNICAL ENGINEER.
4. PUBLIC SERVICE DIRECTOR OR DELEGATE MUST APPROVE OTHER SUITABLE BACKFILL MATERIAL PRIOR TO INSTALLATION.
5. ALL PAVEMENT PATCHES SHALL PROVIDE A UNIFORM AND SMOOTH DRIVING SURFACE.

| CITY OF SALISBURY, N.C. STANDARD DETAIL | DATE: JULY 19, 2022 |
|---|---|
| STANDARD TRENCH AND PAVEMENT REPAIR | NOT TO SCALE |
| | STANDARD P-5 |

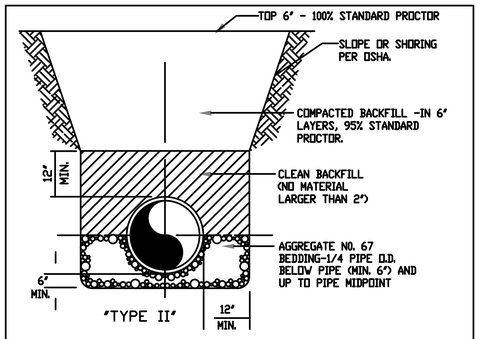


NOTES:
1. FOR USE WITH ALL PVC WATER PIPE, UNLESS CONDITIONS OF POOR OR SATURATED SOIL OR ROCK ARE PRESENT.
2. TRENCH SIDE SLOPES SHALL BE IN ACCORDANCE WITH OSHA REQUIREMENTS. SUPPORT OR SHORE WHEN TRENCH IS MORE THAN 5' DEEP AND 8' LONG. BEGIN SIDE SLOPE, IF USED, APPROX. 18" ABOVE TOP OF PIPE.
3. BACKFILLING OF TRENCHES SHALL BE ACCOMPLISHED IMMEDIATELY AFTER THE PIPE IS LAIDCOMPACTION REQUIREMENTS SHALL BE ATTAINED BY THE USE OF MECHANICAL TAMPS ONLY. EACH AND EVERY LAYER OF BACKFILL SHALL BE PLACED LOOSE IN 6" LAYERS AND THOROUGHLY COMPACTED INTO PLACE.
4. UNDER NO CIRCUMSTANCES SHALL WATER BE PERMITTED TO RISE IN UNBACKFILLED TRENCHES AFTER THE PIPE HAS BEEN PLACED.
5. ALL MATERIAL SHALL HAVE AN IN PLACE DENSITY OF 100% TO A DEPTH 6" BELOW THE FINISHED GRADE OF THE BACKFILL MATERIAL, AND 95% AT GREATER THAN 6" BELOW GRADE.

| CITY OF SALISBURY, N.C. STANDARD DETAIL | DATE: JANUARY 1, 1991 |
|---|---|
| PIPELINE INSTALLATION | NOT TO SCALE |
| TYPE II BEDDING | STANDARD P-2 |

7/15/2024 11:53:43 AM

File Path:

| Revisions | Date |
|---|---|

CONSULTANT

ALPHA TERRA
architecture engineering environment

ARCHITECT/ENGINEER OF RECORD

2014-2024 10TH ANNIVERSARY
Above Group
ENGINEERING | DESIGN | CONSULTING
SDVOSB
www.abovegroupinc.com
COA/CA Lic. No. 31120
305 East Dr., Suite H,
Melbourne, Florida 32904
PH: 321.345.9026

STAMP

STATE OF TEXAS
HAROLD E. VON DRAN
92737
LICENSED
PROFESSIONAL ENGINEER
F-8920
9-30-24

Office of Construction and Facilities Management

VA U.S. Department of Veterans Affairs

| Drawing Title | Phase | Project Title | Project Number |
|---|---|---|---|
| UTILITY DETAILS | 100% CONSTRUCTION DOCUMENTS | STEAM LINE REPLACEMENT | 659-24-903 |
| | | | Building Number |
| Approved: | | Location: SALISBURY, NC VA | Drawing Number |
| | | Issue Date: 7/15/2024 / Checked: KVD / Drawn: KVD | C-9 |

VA FORM 08 - 6231

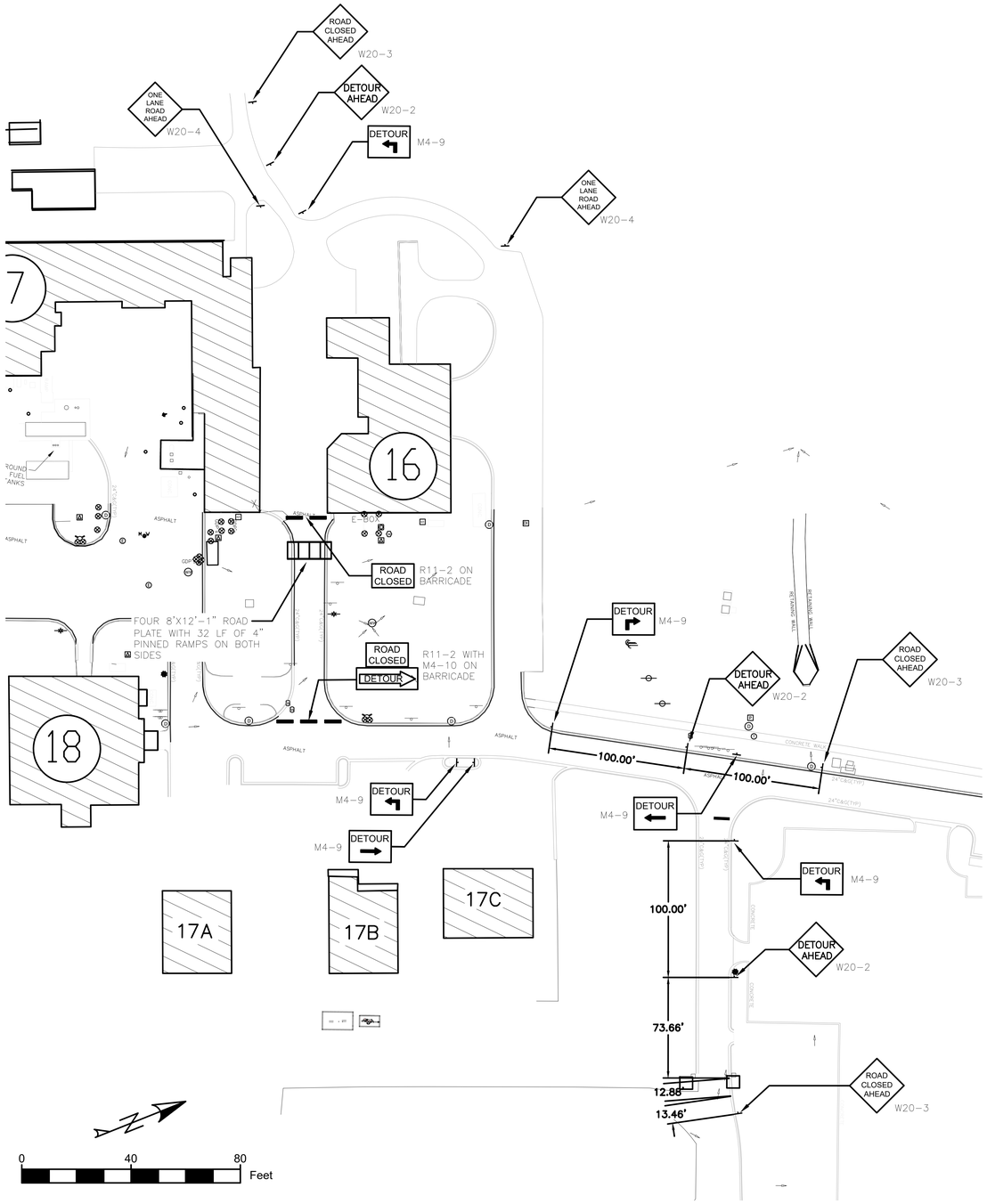


TRAFFIC CONTROL PLAN - PHASE 3 STEAM LINE REPLACEMENT

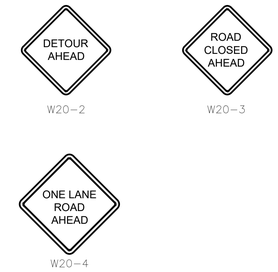


**UNLESS OTHERWISE NOTED ALL WARNING SIGNS TO BE 36"x36"**

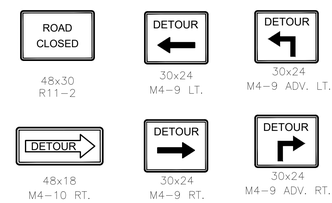


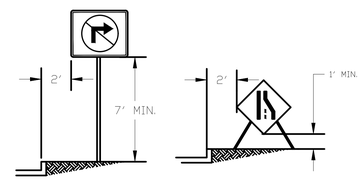


HEIGHT AND LOCATION OF SIGNS

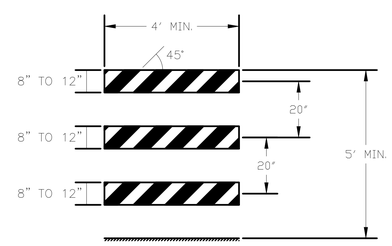


TYPE III BARRICADE

## GENERAL NOTES:

1. ALL DEVICES, THEIR INSTALLATION, AND MAINTENANCE SHALL COMPLY WITH THE 2009 EDITION OF THE MANUAL ON UNIFORM TRAFFIC CONTROL DEVICES (MUTCD).
2. TRAFFIC CONTROL DEVICES SHALL MEET MASH 2009.
3. ALL WORKERS SHALL WEAR HIGH VISIBILITY APPAREL MEETING ANSI 107–2010 CLASS 2 FOR DAY–TIME AND CLASS 3 FOR NIGHTTIME.
4. THE TRAFFIC CONTROL REQUIREMENTS SHOWN ON THESE PLANS ARE MINIMUM REQUIREMENTS ONLY AND DO NOT ATTEMPT TO ADDRESS IN DEPTH THE VARIETY OF SITUATIONS THAT MAY OCCUR ONCE CONSTRUCTION HAS STARTED. IN NO WAY DO THE REQUIREMENTS SHOWN ON THE PLANS RELIEVE THE CONTRACTORS OF THEIR RESPONSIBILITY FOR SELECTING THE PROPER TRAFFIC CONTROL DEVICES. ANY ADDITIONAL QUANTITIES OF TRAFFIC CONTROL DEVICES NECESSARY TO COMPLETE THE CONTRACT OR AS ORDERED INSTALLED BY THE ENGINEER SHALL BE CONSIDERED SUBSIDIARY TO THE CONTRACT LUMP SUM BID PRICE.
5. IF THE PLANS DO NOT INCLUDE A TRAFFIC CONTROL PLAN, OR SHOULD THE CONTRACTOR DESIRE TO CHANGE THE PLAN, A SPECIFIC TRAFFIC HANDLING PLAN THROUGH THE CONSTRUCTION AREA SHALL BE SUBMITTED BY THE CONTRACTOR AND APPROVED BY THE SALISBURY VAMC ENGINEERS.
6. SHEETING SHALL BE AS PER VETERAN ADMINISTRATION STANDARDS.
7. ALL SIGNS SHALL BE RETRO–REFLECTIVE WITH A MATERIAL THAT HAS A SMOOTH, SEALED OUTER SURFACE. WHERE THE COLOR ORANGE IS REQUIRED, THE FLUORESCENT ORANGE COLOR SHALL BE USED. ALL ORANGE SIGNS SHALL HAVE FLUORESCENT ORANGE ASTM TYPE IV SHEETING. ALL OTHER SIGNS SHALL HAVE ASTM TYPE III SHEETING OF STANDARD COLORS. THE WHITE STRIPE ON SLIMLINE CHANNELIZERS SHALL BE ASTM TYPE III SHEETING; THE ORANGE STRIPES SHALL BE ASTM TYPE IV SHEETING. THE ENTIRE AREA OF BARRICADES RAILS, BOTH FRONT AND BACK, SHALL BE ASTM TYPE III SHEETING. THE WHITE STRIPES ON TUBULAR MARKERS SHALL BE ASTM TYPE III SHEETING. THE ENTIRE AREA OF VERTICAL PANELS, BOTH FRONT AND BACK, SHALL HAVE ASTM TYPE III SHEETING.
8. UNLESS OTHERWISE NOTED, ALL TRAFFIC CONTROL DEVICES SHALL BE PROVIDED AND MAINTAINED BY THE CONTRACTOR.
9. SIGNS AND TRAFFIC CONTROL DEVICES NEED TO BE PROPERLY MAINTAINED FOR CLEANLINESS, VISIBILITY, AND CORRECT POSITIONING.
10. CONTRACTOR SHALL OBTAIN UTILITY LOCATES PRIOR TO INSTALLING SIGNPOSTS.
11. ALL SIGNS SHALL TO BE REMOVED, COVERED, OR TURNED AWAY FROM TRAFFIC WHEN NOT IN USE. ALL EXISTING PERMANENT SPEED LIMIT SIGNS AND OTHER CONFLICTING SIGNS SHALL BE COVERED WITH AN OPAQUE WEATHERPROOF MATERIAL OR REMOVED.
12. SIGNS LEFT IN PLACE THREE OR FEWER DAYS CAN BE MOUNTED AT ONE FOOT ABOVE THE ROAD–WAY. SIGNS LEFT IN PLACE GREATER THAN THREE DAYS NEED TO BE MOUNTED AT SEVEN (7) FEET. IF THERE ARE NO SIDEWALKS, NO PEDESTRIANS, AND NO PARKING, MOUNTING HEIGHT CAN BE REDUCED TO FIVE FEET. IF SECONDARY SIGN IS NEEDED MINIMUM MOUNTING HEIGHT MAY BE ONE FOOT LOWER.
13. CONTRACTOR MAY BE REQUIRED TO ADD CONSTRUCTION FENCE TO PROHIBIT PEDESTRIANS FROM ENTERING THE WORK AREA. FENCING SHOULD NOT CREATE A SIGHT DISTANCE RESTRICTION FOR ROAD USERS.

RECAPITULATION OF SIGNS, MARKINGS, BARRICADES.

| SIGN NO. | SIZE | UNIT | TOTAL |
|---|---|---|---|
| W20–2 | 36x36 | EACH | 3 |
| W20–3 | 36x36 | EACH | 3 |
| W20–4 | 36x36 | EACH | 2 |
| R11–2 | 48x30 | EACH | 2 |
| M4–9 ADV. | 30x24 | EACH | 4 |
| M4–9 | 30x24 | EACH | 2 |
| M4–10 | 48x18 | EACH | 1 |
| CONSTRUCTION BARRICADES TYPE III | | EACH | 5 |
| 8'X12'–1" ROAD PLATES | | EACH | 4 |
| 4–IN PINNED RAMPS | | LF | 64 |

LEGEND

- = SIGN
- = TYPE III BARRICADE
- = REFLECTORIZED DRUMS OR FLUORESCENT ORANGE CONES OR SLIMLINE CHANNELIZERS
- = WORK SPACE
- = FLAGGER

Scale: 1"=40-0"

| Revisions | Date |
|---|---|
| | |

CONSULTANT: ALPHA TERRA — architecture engineering environment

ARCHITECT/ENGINEER OF RECORD: 2014-2024 10TH ANNIVERSARY Above Group ENGINEERING | DESIGN | CONSULTING — SDVOSB — www.abovegroupinc.com COA/CA Lic. No. 31120 — 305 East Dr., Suite H, Melbourne, Florida 32904 PH: 321.345.9026

STAMP: STATE OF TEXAS — HAROLD F. VON DWIN, JR. — 92737 — PROFESSIONAL ENGINEER — F-8920 — 9-30-24

Office of Construction and Facilities Management — VA U.S. Department of Veterans Affairs

| Drawing Title | Phase | Project Title | Project Number |
|---|---|---|---|
| TRAFFIC CONTROL PLAN | 100% CONSTRUCTION DOCUMENTS | STEAM LINE REPLACEMENT | 659-24-903 |
| Approved: | | Location: SALISBURY, NC VA | Building Number |
| | | Issue Date: 7/15/2024 — Checked: KVD — Drawn: KVD | Drawing Number: C-10.1 |

File Path: 7/15/2024 11:53:43 AM

VA FORM 08 - 6231

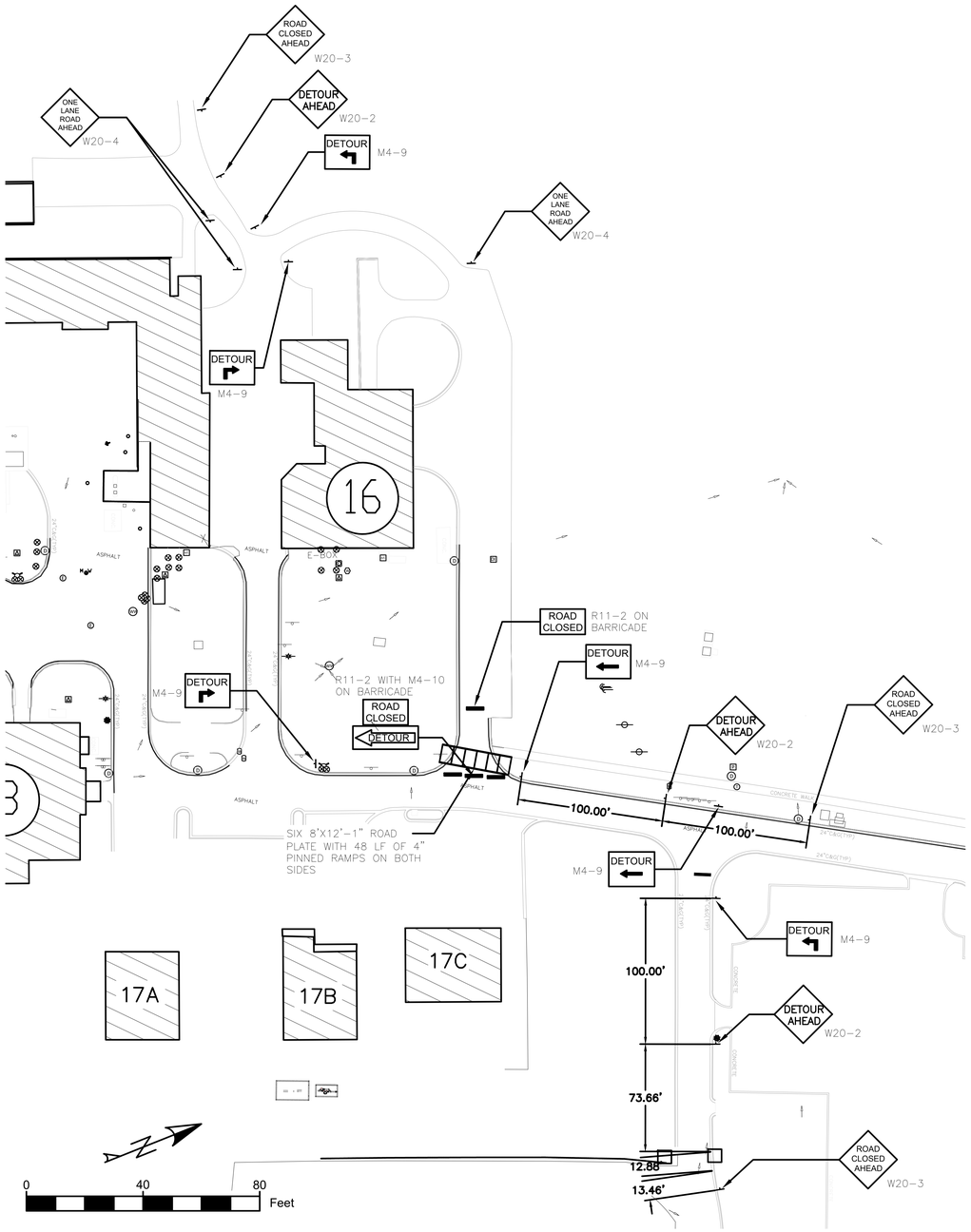


TRAFFIC CONTROL PLAN - PHASE 4A STEAM LINE REPLACEMENT

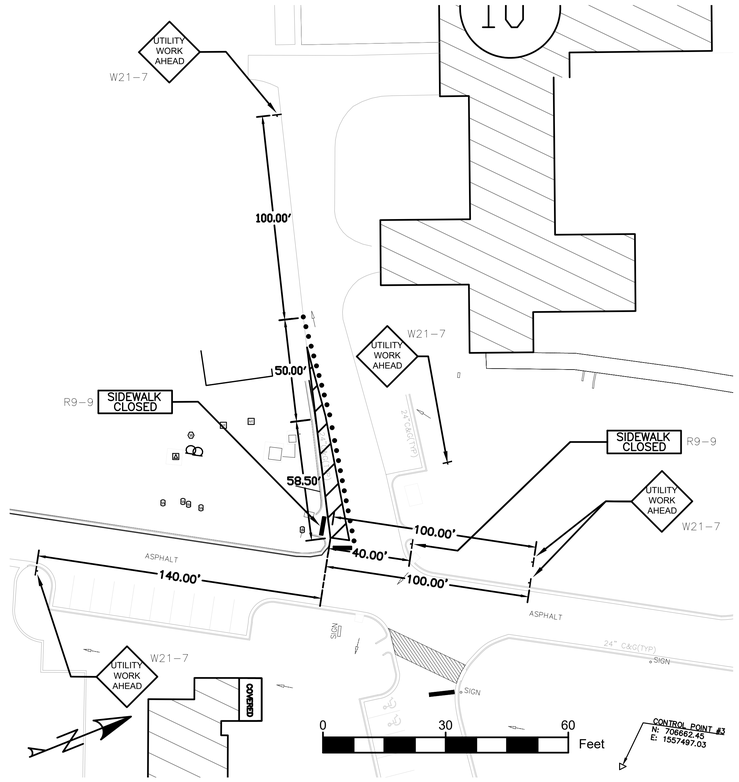


TRAFFIC CONTROL PLAN - PHASE 4B STEAM LINE REPLACEMENT

## GENERAL NOTES:

1. ALL DEVICES, THEIR INSTALLATION, AND MAINTENANCE SHALL COMPLY WITH THE 2009 EDITION OF THE MANUAL ON UNIFORM TRAFFIC CONTROL DEVICES (MUTCD).
2. TRAFFIC CONTROL DEVICES SHALL MEET MASH 2009.
3. ALL WORKERS SHALL WEAR HIGH VISIBILITY APPAREL MEETING ANSI 107-2010 CLASS 2 FOR DAY-TIME AND CLASS 3 FOR NIGHTTIME.
4. THE TRAFFIC CONTROL REQUIREMENTS SHOWN ON THESE PLANS ARE MINIMUM REQUIREMENTS ONLY AND DO NOT ATTEMPT TO ADDRESS IN DEPTH THE VARIETY OF SITUATIONS THAT MAY OCCUR ONCE CONSTRUCTION HAS STARTED. IN NO WAY DO THE REQUIREMENTS SHOWN ON THE PLANS RELIEVE THE CONTRACTORS OF THEIR RESPONSIBILITY FOR SELECTING THE PROPER TRAFFIC CONTROL DEVICES. ANY ADDITIONAL QUANTITIES OF TRAFFIC CONTROL DEVICES NECESSARY TO COMPLETE THE CONTRACT OR AS ORDERED INSTALLED BY THE ENGINEER SHALL BE CONSIDERED SUBSIDIARY TO THE CONTRACT LUMP SUM BID PRICE.
5. IF THE PLANS DO NOT INCLUDE A TRAFFIC CONTROL PLAN, OR SHOULD THE CONTRACTOR DESIRE TO CHANGE THE PLAN, A SPECIFIC TRAFFIC HANDLING PLAN THROUGH THE CONSTRUCTION AREA SHALL BE SUBMITTED BY THE CONTRACTOR AND APPROVED BY THE SALISBURY VAMC ENGINEERS.
6. SHEETING SHALL BE AS PER VETERAN ADMINISTRATION STANDARDS.
7. ALL SIGNS SHALL BE RETRO-REFLECTIVE WITH A MATERIAL THAT HAS A SMOOTH, SEALED OUTER SURFACE. WHERE THE COLOR ORANGE IS REQUIRED, THE FLUORESCENT ORANGE COLOR SHALL BE USED. ALL ORANGE SIGNS SHALL HAVE FLUORESCENT ORANGE ASTM TYPE IV SHEETING. ALL OTHER SIGNS SHALL HAVE ASTM TYPE III SHEETING OF STANDARD COLORS. THE WHITE STRIPE ON SLIMLINE CHANNELIZERS SHALL BE ASTM TYPE III SHEETING; THE ORANGE STRIPES SHALL BE ASTM TYPE IV SHEETING. THE ENTIRE AREA OF BARRICADES RAILS, BOTH FRONT AND BACK, SHALL BE ASTM TYPE III SHEETING. THE WHITE STRIPES ON TUBULAR MARKERS SHALL BE ASTM TYPE III SHEETING. THE ENTIRE AREA OF VERTICAL PANELS, BOTH FRONT AND BACK, SHALL HAVE ASTM TYPE III SHEETING.
8. UNLESS OTHERWISE NOTED, ALL TRAFFIC CONTROL DEVICES SHALL BE PROVIDED AND MAINTAINED BY THE CONTRACTOR.
9. SIGNS AND TRAFFIC CONTROL DEVICES NEED TO BE PROPERLY MAINTAINED FOR CLEANLINESS, VISIBILITY, AND CORRECT POSITIONING.
10. CONTRACTOR SHALL OBTAIN UTILITY LOCATES PRIOR TO INSTALLING SIGNPOSTS.
11. ALL SIGNS SHALL TO BE REMOVED, COVERED, OR TURNED AWAY FROM TRAFFIC WHEN NOT IN USE. ALL EXISTING PERMANENT SPEED LIMIT SIGNS AND OTHER CONFLICTING SIGNS SHALL BE COVERED WITH AN OPAQUE WEATHERPROOF MATERIAL OR REMOVED.
12. SIGNS LEFT IN PLACE THREE OR FEWER DAYS CAN BE MOUNTED AT ONE FOOT ABOVE THE ROAD-WAY. SIGNS LEFT IN PLACE GREATER THAN THREE DAYS NEED TO BE MOUNTED AT SEVEN (7) FEET. IF THERE ARE NO SIDEWALKS, NO PEDESTRIANS, AND NO PARKING, MOUNTING HEIGHT CAN BE REDUCED TO FIVE FEET. IF SECONDARY SIGN IS NEEDED MINIMUM MOUNTING HEIGHT MAY BE ONE FOOT LOWER.
13. CONTRACTOR MAY BE REQUIRED TO ADD CONSTRUCTION FENCE TO PROHIBIT PEDESTRIANS FROM ENTERING THE WORK AREA. FENCING SHOULD NOT CREATE A SIGHT DISTANCE RESTRICTION FOR ROAD USERS.

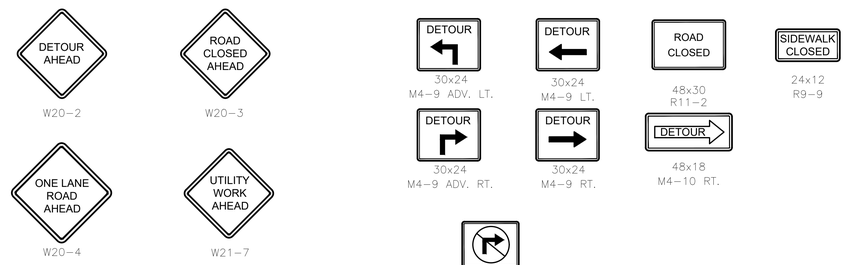


**UNLESS OTHERWISE NOTED ALL WARNING SIGNS TO BE 36"x36"**

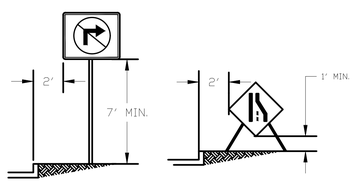


HEIGHT AND LOCATION OF SIGNS

| RECAPITULATION OF SIGNS, MARKINGS, BARRICADES. | | | |
|---|---|---|---|
| SIGN NO. | SIZE | UNIT | TOTAL |
| W20-2 | 36x36 | EACH | 3 |
| W20-3 | 36x36 | EACH | 3 |
| W20-4 | 36x36 | EACH | 3 |
| W21-7 | 36x36 | EACH | 4 |
| R9-9 | 24x12 | EACH | 2 |
| R11-2 | 48x30 | EACH | 2 |
| M4-9 ADV. | 30x24 | EACH | 4 |
| M4-9 | 30x24 | EACH | 2 |
| M4-10 | 48x18 | EACH | 1 |
| CONSTRUCTION BARRICADES TYPE III | | EACH | 6 |
| REFLECTIVE DRUMS | | EACH | 23 |
| 8'X12'-1" ROAD PLATES | | EACH | 6 |
| 4-IN PINNED RAMPS | | LF | 96 |

FORMULAS FOR DETERMINING TAPER LENGTH

| SPEED (S) | TAPER LENGTH (L) IN FEET |
|---|---|
| 40 MPH OR LESS | $L = \frac{WS^2}{60}$ |
| 45 MPH OR MORE | L = WS |

WHERE: L = TAPER LENGTH IN FEET
W = WIDTH OF OFFSET IN FEET
S = POSTED SPEED LIMIT PRIOR TO WORK STARTING
*NOTE: MINIMUM TAPER LENGTH TO BE 50 FEET WHERE ALL CALCULATIONS COME UP LESS THAN 50 FEET.

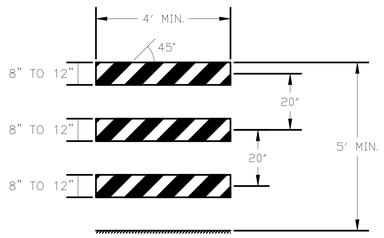


TYPE III BARRICADE

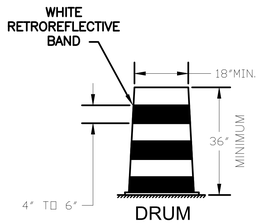


DRUM

LEGEND

- = SIGN
- = TYPE III BARRICADE
- = REFLECTORIZED DRUMS OR FLUORESCENT ORANGE CONES OR SLIMLINE CHANNELIZERS
- = WORK SPACE
- = FLAGGER

Scale: 1"=40-0"

| Revisions | Date |
|---|---|
| | |

CONSULTANT: ALPHA TERRA architecture engineering environment

ARCHITECT/ENGINEER OF RECORD: 2014-2024 10TH ANNIVERSARY Above Group ENGINEERING | DESIGN | CONSULTING
www.abovegroupinc.com
COA/CA Lic. No. 31120
305 East Dr., Suite H, Melbourne, Florida 32904
PH: 321.345.9026
SDVOSB

STAMP: STATE OF TEXAS F-8920 HARGE E. VON DRAN, JR. 92737 PROFESSIONAL ENGINEER 9-30-24

Office of Construction and Facilities Management
VA U.S. Department of Veterans Affairs

| | |
|---|---|
| Drawing Title | TRAFFIC CONTROL PLAN |
| Phase | 100% CONSTRUCTION DOCUMENTS |
| Approved: | |
| Project Title | STEAM LINE REPLACEMENT |
| Project Number | 659-24-903 |
| Building Number | |
| Location | SALISBURY, NC VA |
| Issue Date | 7/15/2024 |
| Checked | KVD |
| Drawn | KVD |
| Drawing Number | C-10.2 |

File Path
7/15/2024 11:53:43 AM
VA FORM 08 - 6231

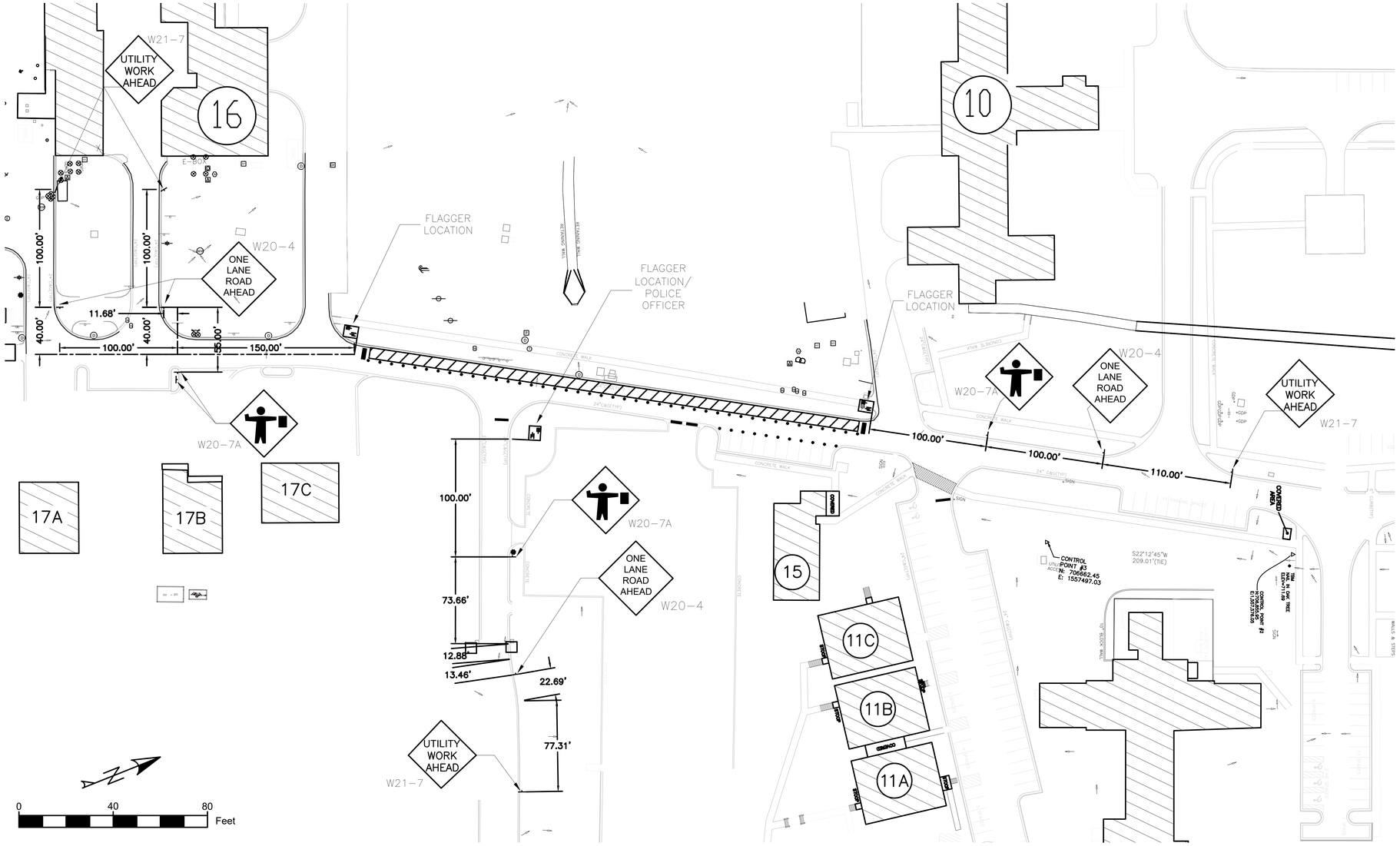


# TRAFFIC CONTROL PLAN - PHASE 4C STEAM LINE REPLACEMENT

## GENERAL NOTES:

1. ALL DEVICES, THEIR INSTALLATION, AND MAINTENANCE SHALL COMPLY WITH THE 2009 EDITION OF THE MANUAL ON UNIFORM TRAFFIC CONTROL DEVICES (MUTCD).
2. TRAFFIC CONTROL DEVICES SHALL MEET MASH 2009.
3. ALL WORKERS SHALL WEAR HIGH VISIBILITY APPAREL MEETING ANSI 107–2010 CLASS 2 FOR DAY–TIME AND CLASS 3 FOR NIGHTTIME.
4. THE TRAFFIC CONTROL REQUIREMENTS SHOWN ON THESE PLANS ARE MINIMUM REQUIREMENTS ONLY AND DO NOT ATTEMPT TO ADDRESS IN DEPTH THE VARIETY OF SITUATIONS THAT MAY OCCUR ONCE CONSTRUCTION HAS STARTED. IN NO WAY DO THE REQUIREMENTS SHOWN ON THE PLANS RELIEVE THE CONTRACTORS OF THEIR RESPONSIBILITY FOR SELECTING THE PROPER TRAFFIC CONTROL DEVICES. ANY ADDITIONAL QUANTITIES OF TRAFFIC CONTROL DEVICES NECESSARY TO COMPLETE THE CONTRACT OR AS ORDERED INSTALLED BY THE ENGINEER SHALL BE CONSIDERED SUBSIDIARY TO THE CONTRACT LUMP SUM BID PRICE.
5. IF THE PLANS DO NOT INCLUDE A TRAFFIC CONTROL PLAN, OR SHOULD THE CONTRACTOR DESIRE TO CHANGE THE PLAN, A SPECIFIC TRAFFIC HANDLING PLAN THROUGH THE CONSTRUCTION AREA SHALL BE SUBMITTED BY THE CONTRACTOR AND APPROVED BY THE SALISBURY VAMC ENGINEERS.
6. SHEETING SHALL BE AS PER VETERAN ADMINISTRATION STANDARDS.
7. ALL SIGNS SHALL BE RETRO–REFLECTIVE WITH A MATERIAL THAT HAS A SMOOTH, SEALED OUTER SURFACE. WHERE THE COLOR ORANGE IS REQUIRED, THE FLUORESCENT ORANGE COLOR SHALL BE USED. ALL ORANGE SIGNS SHALL HAVE FLUORESCENT ORANGE ASTM TYPE IV SHEETING. ALL OTHER SIGNS SHALL HAVE ASTM TYPE III SHEETING OF STANDARD COLORS. THE WHITE STRIPE ON SLIMLINE CHANNELIZERS SHALL BE ASTM TYPE III SHEETING; THE ORANGE STRIPES SHALL BE ASTM TYPE IV SHEETING. THE ENTIRE AREA OF BARRICADES RAILS, BOTH FRONT AND BACK, SHALL BE ASTM TYPE III SHEETING. THE WHITE STRIPES ON TUBULAR MARKERS SHALL BE ASTM TYPE III SHEETING. THE ENTIRE AREA OF VERTICAL PANELS, BOTH FRONT AND BACK, SHALL HAVE ASTM TYPE III SHEETING.
8. UNLESS OTHERWISE NOTED, ALL TRAFFIC CONTROL DEVICES SHALL BE PROVIDED AND MAINTAINED BY THE CONTRACTOR.
9. SIGNS AND TRAFFIC CONTROL DEVICES NEED TO BE PROPERLY MAINTAINED FOR CLEANLINESS, VISIBILITY, AND CORRECT POSITIONING.
10. CONTRACTOR SHALL OBTAIN UTILITY LOCATES PRIOR TO INSTALLING SIGNPOSTS.
11. ALL SIGNS SHALL TO BE REMOVED, COVERED, OR TURNED AWAY FROM TRAFFIC WHEN NOT IN USE. ALL EXISTING PERMANENT SPEED LIMIT SIGNS AND OTHER CONFLICTING SIGNS SHALL BE COVERED WITH AN OPAQUE WEATHERPROOF MATERIAL OR REMOVED.
12. SIGNS LEFT IN PLACE THREE OR FEWER DAYS CAN BE MOUNTED AT ONE FOOT ABOVE THE ROAD–WAY. SIGNS LEFT IN PLACE GREATER THAN THREE DAYS NEED TO BE MOUNTED AT SEVEN (7) FEET. IF THERE ARE NO SIDEWALKS, NO PEDESTRIANS, AND NO PARKING, MOUNTING HEIGHT CAN BE REDUCED TO FIVE FEET. IF SECONDARY SIGN IS NEEDED MINIMUM MOUNTING HEIGHT MAY BE ONE FOOT LOWER.
13. CONTRACTOR MAY BE REQUIRED TO ADD CONSTRUCTION FENCE TO PROHIBIT PEDESTRIANS FROM ENTERING THE WORK AREA. FENCING SHOULD NOT CREATE A SIGHT DISTANCE RESTRICTION FOR ROAD USERS.

RECAPITULATION OF SIGNS, MARKINGS, BARRICADES.

| SIGN NO. | SIZE | UNIT | TOTAL |
|---|---|---|---|
| W20–4 | 36x36 | EACH | 4 |
| W20–7a | 36x36 | EACH | 4 |
| W21–7 | 36x36 | EACH | 4 |
| R9–9 | 24x12 | EACH | 2 |
| CONSTRUCTION BARRICADES TYPE III | | EACH | 54 |
| REFLECTIVE DRUMS | | EACH | 23 |

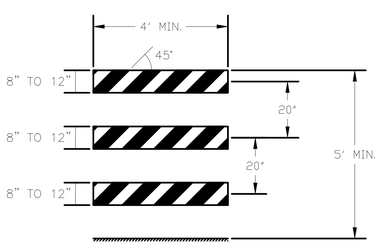


TYPE III BARRICADE

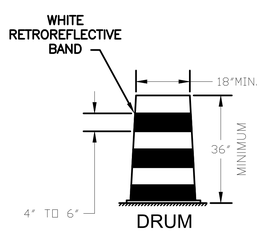


DRUM

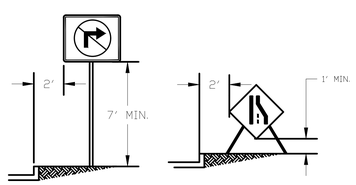


HEIGHT AND LOCATION OF SIGNS

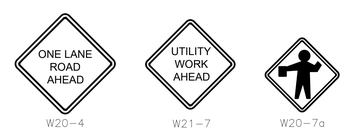


**UNLESS OTHERWISE NOTED ALL WARNING SIGNS TO BE 36"x36"**

24x12
R9–9

LEGEND

- = SIGN
- = TYPE III BARRICADE
- = REFLECTORIZED DRUMS OR FLUORESCENT ORANGE CONES OR SLIMLINE CHANNELIZERS
- = WORK SPACE
- = FLAGGER / POLICE OFFICER

Scale: 1"=40-0"

CONSULTANT: ALPHA TERRA architecture engineering environment

ARCHITECT/ENGINEER OF RECORD: 2014-2024 10th ANNIVERSARY Above Group ENGINEERING | DESIGN | CONSULTING
www.abovegroupinc.com
COA/CA Lic. No. 31120
305 East Dr., Suite H, Melbourne, Florida 32904
PH: 321.345.9026

STAMP: STATE OF TEXAS, HAROLD F. VON EHREN, III, 92737, PROFESSIONAL ENGINEER, F-8920, 9-30-24

Office of Construction and Facilities Management
VA U.S. Department of Veterans Affairs

| Drawing Title | Phase | Project Title | Project Number |
|---|---|---|---|
| TRAFFIC CONTROL PLAN | 100% CONSTRUCTION DOCUMENTS | STEAM LINE REPLACEMENT | 659-24-903 |
| Approved: | | Location: SALISBURY, NC VA | Building Number |
| | | Issue Date: 7/15/2024; Checked: KVD; Drawn: KVD | Drawing Number: C-10.3 |

Revisions | Date

File Path: 7/15/2024 11:53:43 AM

VA FORM 08 - 6231

# GENERAL NOTES

**GENERAL:**

1. CONTRACTOR IS SOLELY RESPONSIBLE FOR MEANS AND METHODS DURING THE COURSE OF THE WORK. DO NOT DAMAGE OR ENDANGER THE STRUCTURAL INTEGRITY OF THE WORK.
2. CONTRACTOR SHALL BE RESPONSIBLE FOR THE PROPER AND SAFE DESIGN OF SHORING SYSTEMS FOR TRENCHES AND EXCAVATIONS.
3. THE BUILDING FRAME IS NOT SELF-SUPPORTING UNTIL THE ENTIRE STRUCTURAL SYSTEM HAS BEEN INSTALLED. TEMPORARY BRACING MUST BE PROVIDED BY THE CONTRACTOR TO SUPPORT THE FRAME UNTIL THE STRUCTURAL SYSTEM HAS BEEN COMPLETED.
4. NOTIFY ENGINEER IN CASE OF DISCREPANCIES BETWEEN DRAWINGS, THESE NOTES, AND PROJECT MANUAL BEFORE PROCEEDING WITH THE WORK.
5. USE DRAWINGS OF OTHER TRADES IN CONJUNCTION WITH THE STRUCTURAL DRAWINGS TO PROPERLY PERFORM THE WORK.
6. IF CONDITIONS DISCLOSED DURING EXCAVATION REVEAL UNFORESEEN CONDITIONS, PROMPTLY REQUEST DIRECTION FROM ENGINEER BEFORE PROCEEDING.
7. CONTRACTOR IS RESPONSIBLE FOR COORDINATING BETWEEN TRADES.
8. DO NOT SCALE DRAWINGS.
9. SECTIONS AND DETAILS SHOWN, WHILE DRAWN FOR SPECIFIC LOCATIONS, ARE INTENDED TO ESTABLISH THE GENERAL TYPES OF DETAILS WILL APPLY TO OTHER LOCATIONS.
10. THE ENGINEER'S REVIEW OF A SUBMITTAL SHALL NOT RELIEVE THE CONTRACTOR OF THEIR RESPONSIBILITY TO FOLLOW THE INTENT OF THE CONTRACT DRAWINGS.
11. REPRODUCTION OF CONTRACT DOCUMENTS WILL NOT BE ACCEPTED AS SHOP DRAWINGS.

**DELEGATED DESIGN ITEMS:**

1. EMPLOY OR RETAIN A LICENSED PROFESSIONAL ENGINEER IN THE PROJECT JURISDICTION TO DESIGN AND DETAIL THE FOLLOWING PERFORMANCE SPECIFIED STRUCTURAL COMPONENTS:
   A. TEMPORARY EXCAVATION SUPPORT
2. SEE INDIVIDUAL MATERIAL SECTIONS FOR ADDITIONAL REQUIREMENTS.
3. SHOP DRAWINGS AND CALCULATIONS SHALL BE SIGNED AND SEALED BY A PROFESSIONAL ENGINEER REGISTERED IN THE LOCAL JURISDICTION AND SUBMITTED FOR REVIEW.

**EXISTING CONSTRUCTION:**

1. ABOVE GROUP, INC. HAS PREPARED THESE PLANS BASED ON A LIMITED AMOUNT OF FIELD EXPLORATION. THE CONTRACTOR SHALL VERIFY THAT THE EXISTING MEMBERS SHOWN IN THE PLANS MATCH EXISTING AS BUILT CONDITIONS PRIOR TO PREPARING SHOP DRAWINGS. IF THE AS BUILT CONDITIONS DO NOT CONFORM TO THE INFORMATION SHOWN IN THE PLANS, OR IF ANY STRUCTURAL MEMBER IS FOUND TO BE IN POOR CONDITION, THE CONTRACTOR SHALL INFORM ENGINEER OF THE ACTUAL SIZES AND/OR CONDITION. RE-DESIGN AND ADDITIONAL FRAMING MAY BE REQUIRED IN THAT CASE.
2. ALL NEW PENETRATIONS THROUGH THE EXISTING FRAMED SLAB AND WALLS SHALL BE ACCURATELY LOCATED BY THE CONTRACTOR. THE CONTRACTOR SHALL PREPARE SHOP DRAWINGS SHOWING ALL PROPOSED OPENINGS AND SHALL SUBMIT THESE FOR REVIEW AND APPROVAL PRIOR TO CUTTING ANY OPENINGS.
3. NEW PENETRATIONS SHOWN IN THE STRUCTURAL DRAWINGS ARE PRINCIPAL OPENINGS. THE CONTRACTOR SHALL COORDINATE WITH THE MECHANICAL DRAWINGS FOR ALL PENETRATIONS.
4. ALL NEW PIPE AND DUCT PENETRATIONS SHALL BE LOCATED BY THE CONTRACTOR TO AVOID CONCRETE REINFORCEMENT. IF CUTTING OF ANY REINFORCEMENT OR EXISTING SUPPORTING MEMBER CANNOT BE AVOIDED, THEN PRIOR TO CUTTING, THE CONTRACTOR SHALL PREPARE A DETAILED DRAWING SHOWING THE PROPOSED PENETRATION AND ALL THE AFFECTED REINFORCEMENT AND SUPPORTING MEMBERS AND SHALL SUBMIT THE DRAWING TO ENGINEER FOR REVIEW AND APPROVAL. THE CONTRACTOR SHALL NOT CUT ANY REINFORCEMENT OR MEMBER WITHOUT THE PRIOR APPROVAL OF ENGINEER.

**FOUNDATIONS:**

1. FOUNDATIONS ARE DESIGNED FOR AN ASSUMED BEARING PRESSURE OF 1500 PSF.
2. CONTRACTOR SHALL NOTIFY THE GEOTECHNICAL ENGINEER FOR INSPECTION BEFORE PLACING ANY FOOTINGS. GEOTECHNICAL ENGINEER SHALL INSPECT AND REPORT ON ADEQUACY OF BEARING MATERIAL.
3. FOOTINGS SHOULD BE CAST ON THE SAME DAY IN WHICH EXCAVATION FOR THEM IS COMPLETED. IF PLACING OF CONCRETE IS DELAYED, FOOTING BOTTOM SHALL BE TRIMMED TO FIRM MATERIAL IMMEDIATELY BEFORE CASTING.
4. PLACE CONCRETE IN DRY EXCAVATIONS ONLY. NOTE SOIL AND WATER CONDITIONS AS SHOWN BY BORINGS AND DEPTHS OF FOOTINGS AS SHOWN ON FOUNDATION PLANS. PENDING APPROVAL BY THE OWNER, CONTRACTOR MAY ELECT TO CONDUCT FURTHER SUBSURFACE INVESTIGATIONS AT THEIR OWN EXPENSE.
5. WHERE TRENCH BOTTOMS ARE DUG BELOW ADJACENT FOOTING BOTTOMS ON A SLOPE STEEPER THAN ONE VERTICAL TO TWO HORIZONTAL, THE TRENCH SHALL BE BACKFILLED WITH LEAN CONCRETE TO THE POINT WHERE THE STATED SLOPE CROSSES THE TRENCH.
6. FOOTINGS SHALL BE FORMED UNLESS OTHERWISE PERMITTED BY THE ENGINEER.
7. PROVIDE CONTINUOUS KEYWAY AND DOWELS IN TOP OF WALL FOOTING SUPPORTING CONCRETE WALLS.
8. REFER TO SPECIFICATIONS OR WATERPROOFING DETAILS AND PROCEDURES. PROVIDE WATER STOP AT ALL JOINTS BELOW GRADE.
9. BACKFILLING:
   A. BEFORE BACKFILLING WALLS, GROUT AND/OR CONCRETE SHALL HAVE ATTAINED DESIGN STRENGTH. AND ALL SLABS AND BEAMS THAT ARE NECESSARY FOR THE STABILITY OF THE WALLS SHALL BE IN PLACE.
   B. BACKFILL SHALL BE CARRIED UP EVENLY ON BOTH SIDES OF WALL TO LOWER GRADE.
   C. BACKFILL SHALL BE PLACED IN MAXIMUM OF 8" LOOSE LIFT THICKNESS AND COMPACTED TO INFILL 98% OF STANDARD PROCTOR.
   D. TESTS SHALL BE PERFORMED FOR EACH LIFT AT A RATE OF TWO TESTS PER LIFT MINIMUM AND NOT LESS THAN ONE TEST PER 100' OF WALL LENGTH.
10. STRUCTURAL FILL INCLUDING UNDER FOOTINGS:
    A. SHALL BE PLACED IN MAXIMUM OF 8" LOOSE LIFT THICKNESS AND COMPACTED TO 98% OF STANDARD PROCTOR.
    B. ON-SITE OR IMPORTED GRANULAR FILLS INCLUDING GW, GP, GM, SW, SP, ND, SM CLASSIFIED IN ACCORDANCE WITH THE UNIFIED SOIL CLASSIFICATION SYSTEM (USCS) AND WITHIN 2% OF OPTIMUM MOISTURE. FURTHERMORE, THE MATERIAL TO BE UTILIZED AS STRUCTURAL FILL SHOULD HAVE A PLASTICITY INDEX (PI) LESS THAN 2, SUBJECT TO FINAL APPROVAL BY THE GEOTECHNICAL ENGINEER.
11. FILL UNDER SLABS ON GRADE SHALL BE COMPACTED TO 98% OF STANDARD PROCTOR DENSITY. TESTS SHALL BE PERFORMED FOR EACH LIFT.

**CONCRETE:**

1. CONCRETE NOT OTHERWISE SPECIFIED SHALL BE f'c=3000 PSI NORMAL WEIGHT CONCRETE. ALL CONCRETE EXPOSED TO THE WEATHER SHALL BE f'c=5000 PSI MINIMUM AND SHALL BE AIR ENTRAINED FOR EXPOSURE CLASS F2 PER ACI 318 "BUILDING CODE REQUIREMENTS FOR STRUCTURAL CONCRETE".
2. ALL REINFORCING STEEL SHALL BE CONFORMING TO ASTM DESIGNATION A615, GRADE 60. ALL REINFORCING STEEL SHALL BE DETAILED, FABRICATED AND PLACED IN ACCORDANCE WITH ACI SP-66, "ACI DETAILING MANUAL".
3. ALL SPLICES IN REINFORCING SHALL BE CLASS "B" SPLICES IN ACCORDANCE WITH ACI 318, "BUILDING CODE REQUIREMENTS FOR STRUCTURAL CONCRETE" EXCEPT AS OTHERWISE NOTED.
4. UNLESS OTHERWISE NOTED ON STRUCTURAL DRAWINGS, PROVIDE CONCRETE PROTECTION FOR REINFORCING AS FOLLOWS:
   A. CAST AGAINST EARTH = 3"
   B. EXPOSED TO EARTH OR WEATHER:
      1. NO. 6 AND LARGER BARS = 2"
      2. NO. 5 AND SMALLER BARS = 1 1/2"
   C. NOT EXPOSED TO EARTH OR WEATHER:
      1. SLABS AND WALLS = 3/4"
      2. BEAMS AND COLUMNS = 1 1/2" TO TIES, STIRRUPS OR SPIRALS
5. OPENINGS SHOWN ON THE STRUCTURAL DRAWINGS ARE PRINCIPAL OPENINGS. SEE MECHANICAL DRAWINGS FOR HOLES IN SLABS AND WALLS NOT SHOWN.
6. THE GENERAL CONTRACTOR SHALL SUBMIT PLANS SHOWING ALL PENETRATIONS THROUGH THE FRAMED SLABS AND WALLS. THE OPENINGS SHALL BE ACCURATELY LOCATED AND DIMENSIONED.
7. NO OPENINGS SHALL BE MADE THROUGH CONCRETE FRAMED SLABS AND WALLS UNLESS THESE ARE SPECIFICALLY SHOWN ON THE STRUCTURAL DRAWINGS OR ON THE APPROVED STRUCTURAL SHOP DRAWINGS.
8. CONSTRUCTION JOINTS SHALL HAVE THE SURFACE OF THE FIRST POUR ROUGHENED TO 1/4" AMPLITUDE, UNLESS OTHERWISE NOTED.
9. THE CONTRACTOR MUST SUBMIT A CONCRETE DESIGN MIX IN ACCORDANCE WITH ACI 318. SUCH DESIGN MIX SHALL BE ACCOMPANIED BY THE APPROPRIATE GRAPHS AND BACKGROUND DATA. CONCRETE DESIGN MIX SHALL INDICATE 7 AND 28 DAY STRENGTHS, CEMENT CONTENT, WATER-CEMENT RATIO, FINE AND COARSE AGGREGATES AND ADMIXTURES FOR EACH DESIGN STRENGTH. THE ADDITION OF WATER AT THE PLANT OR IN THE FIELD GREATER THAN THE SPECIFIED WATER CONTENT IS STRICTLY PROHIBITED.
10. ALL CONCRETE WORK SHALL CONFORM TO THE LATEST LOCAL APPROVED EDITIONS OF THE FOLLOWING ACI AND ASTM DOCUMENTS:
    A. ACI-301 — SPECIFICATIONS FOR STRUCTURAL CONCRETE
    B. ACI-318 — CODE
    C. ACI-214 — COMPRESSIVE TEST
    D. ACI-306 — COLD WEATHER
    E. ACI SP-66 — DETAILING
    F. ACI-347 — FORMWORK
    G. ACI-305 — HOT WEATHER
    H. ACI-211 — PROPORTIONS OF CONCRETE
    I. ACI-304 — PLACING CONCRETE
    J. ASTM C-94 — READY-MIX CONCRETE
11. ALL FIELD AND LAB TESTING OF CONCRETE SHALL CONFORM TO THE LATEST LOCAL APPROVED EDITIONS OF ASTM:
    A. ASTM C-31 — FIELD CYLINDER SPECIMENS
    B. ASTM C-143 — SLUMP TEST
    C. ASTM C-231 — AIR CONTENT (WHEN REQUIRED)
    D. ASTM C-39 — LAB TESTING CYLINDERS
    E. ASTM C-172 — SAMPLING FRESH CONCRETE
    F. ASTM C-42 — HARDENED CORES (WHEN REQUIRED)
    TEST RESULTS SHALL BE SIGNED AND SEALED BY A PROFESSIONAL ENGINEER REGISTERED IN THE LOCAL JURISDICTION.
12. ALL FORMWORK SHALL BE IN ACCORDANCE WITH ACI 347, "GUIDE TO FORMWORK FOR CONCRETE".

**POST-INSTALLED ANCHORS:**

1. DRILL AND INSTALL POST-INSTALLED ANCHORS ACCORDING TO MANUFACTURER'S PRINTED INSTALLATION INSTRUCTIONS AND PER MANUFACTURER'S ON-SITE TRAINING.
2. ALL INSTALLERS OF POST-INSTALLED ANCHORS SHALL BE ACI/CRSI ADHESIVE ANCHOR INSTALLER CERTIFIED. SUBMIT CERTIFICATES FOR RECORD.
3. ALL POST-INSTALLED ANCHORS SHALL MEET ICC-ES COMPLIANCE FOR EACH TYPE OF APPLICATION.
4. SUBMIT PRODUCT INFORMATION AND ICC-ES EVALUATION REPORT FOR EACH ANCHOR.
5. ALL ANCHOR DESIGNS ARE FOR INSTALLATION IN THE FOLLOWING CONDITIONS, UNLESS NOTED OTHERWISE. WRITTEN APPROVAL MUST BE RECEIVED FROM ENGINEER PRIOR TO INSTALLATION OF ADHESIVE ANCHORS IN ALTERNATE CONDITIONS.
   A. DRY CONCRETE, UNLESS NOTED OTHERWISE.
   B. CONCRETE TEMPERATURE AT TIME OF INSTALLATION MUST BE BETWEEN 14° F AND 104° F. SEE MANUFACTURER'S PRINTED INSTALLATION INSTRUCTION FOR ADHESIVE GEL AND CURE TIMES.
   C. ANCHOR HOLES TO BE HAMMER DRILLED.
   D. ANCHOR HOLES TO BE CLEANED PER MANUFACTURER'S PRINTED INSTALLATION INSTRUCTIONS PRIOR TO ADHESIVE INJECTION.
   E. ANCHORS/POST-INSTALLED REINFORCING SHALL NOT BE LOADED UNTIL CONCRETE OR GROUT HAS BEEN ALLOWED TO CURE FOR 21 DAYS AND/OR HAS ATTAINED 70% OF ITS DESIGN STRENGTH.
6. ALL POST-INSTALLED ANCHORS IN CONCRETE SHALL BE SUITED FOR USE IN SEISMIC AND CRACKED CONCRETE APPLICATIONS.
7. ADHESIVE ANCHORS IN CONCRETE SHALL BE HILTI HIT HY-200, OR APPROVED EQUAL.
8. EXPANSION ANCHORS IN CONCRETE SHALL BE HILTI KWIK BOLT TZ2, OR APPROVED EQUAL.
9. PROVIDE STANDARD AISC HOLES IN ALL STEEL MEMBERS RECEIVING POST-INSTALLED ANCHORS. IF OVERSIZED HOLES ARE PROVIDED TO EASE INSTALLATION OF THE ANCHORS, A PLATE WASHER (1/4"X2"X2") WITH AN AISC STANDARD HOLE SHALL BE INSTALLED AND 1/8" FILLET WELDED (ALL AROUND) TO THE MEMBER.
10. ALL ANCHORS AND REINFORCING SHALL BE INSTALLED IN ACCORDANCE WITH THE SPACING AND EDGE DISTANCES SHOWN IN THE DRAWINGS. THE CONTRACTOR SHALL INFORM THE ARCHITECT PRIOR TO INSTALLING THE ANCHORS IF THE SPACING AND EDGE DISTANCES SHOWN IN THE DRAWINGS CANNOT BE ACHIEVED. IF THIS IS THE CASE, RE-DESIGN MIGHT BE REQUIRED AND THE ANCHORS SHOULD NOT BE INSTALLED UNTIL APPROVAL HAS BEEN PROVIDED BY THE ENGINEER.
11. DO NOT CUT ANY REINFORCING UNLESS IT IS SPECIFICALLY INDICATED IN THE DRAWINGS OR IS APPROVED BY THE ENGINEER.
12. POST INSTALLED ANCHORS AND REINFORCING SHALL ONLY BE USED WHERE SPECIFIED IN THE CONTRACT DRAWINGS. THE CONTRACTOR SHALL OBTAIN APPROVAL FROM THE ENGINEER PRIOR TO INSTALLING POST INSTALLED ANCHORS WHERE CAST-IN PLACE ANCHORS ARE MISSING, MISPLACED OR DAMAGED.

**DESIGN CODES:**

VA DESIGN MANUAL STRUCTURAL
PG-18-10 (OCTOBER 1, 2022 REV JULY 1, 2023)

VA SEISMIC DESIGN REQUIREMENTS
H18-8 (JULY 1, 2023)

INTERNATIONAL BUILDING CODE:
IBC 2021

MINIMUM BUILDING DESIGN LOADS AND ASSOCIATED CRITERIA FOR BUILDINGS AND OTHER STRUCTURES:
ASCE 7-22

BUILDING CODE REQUIREMENTS FOR STRUCTURAL CONCRETE:
ACI 318-14

**DESIGN LOADS:**
RISK CATEGORY IV

**SEISMIC DESIGN DATA:**

EQUIVALENT LATERAL FORCE PROCEDURE
SOIL SITE CLASS ASSUMED 'D'
SEISMIC DESIGN CATEGORY C
SEISMIC IMPORTANCE FACTOR, Ie = 1.5

MAPPED SPECTRAL RESPONSE ACCELERATION PARAMETERS:
Ss = 0.240g
S1 = 0.081g

DESIGN SPECTRAL RESPONSE ACCELERATION PARAMETERS:
Sds = 0.200g
Sd1 = 0.110g

# STRUCTURAL ABBREVIATIONS

| ABBR. | DESCRIPTION |
|---|---|
| AB | ANCHOR BOLT |
| ABV | ABOVE |
| ACI | AMERICAN CONCRETE INSTITUTE |
| ADDL | ADDITIONAL |
| ADH | ADHESIVE |
| ADJ | ADJACENT, ADJUSTMENT |
| A/E | ARCHITECT/ENGINEER |
| AESS | ARCHITECTURALLY EXPOSED STRUCTURAL STEEL |
| AFF | ABOVE FINISHED FLOOR |
| AGG | AGGREGATE |
| AHJ | AUTHORITY HAVING JURISDICTION |
| AISC | AMERICAN INSTITUTE OF STEEL CONSTRUCTION |
| AISI | AMERICAN IRON AND STEEL INSTITUTE |
| ALT | ALTERNATE |
| ANCH | ANCHOR |
| ANSI | AMERICAN NATIONAL STANDARDS INSTITUTE |
| APA | ENGINEERED WOOD ASSOCIATION |
| APRX | APPROXIMATE |
| AR | ANCHOR ROD |
| ARCH | ARCHITECT(URAL) |
| ASCE | AMERICAN SOCIETY OF CIVIL ENGINEERS |
| ASD | ALLOWABLE STRESS DESIGN |
| ASTM | AMERICAN SOCIETY FOR TESTING AND MATERIALS |
| AWC | AMERICAN WOOD COUNCIL |
| AWPA | AMERICAN WOOD PROTECTION AGENCY |
| AWS | AMERICAN WELDING SOCIETY |
| AVG | AVERAGE |
| B | BOTTOM |
| B/ | BOTTOM OF |
| B-B | BACK-TO-BACK |
| BAL | BALANCE |
| BEL | BELOW |
| BF | BRACED FRAME |
| BLDG | BUILDING |
| BLK(G) | BLOCK(ING) |
| BM | BEAM |
| BOT | BOTTOM |
| BP | BASE PLATE, BEARING PLATE |
| BR | BRACE(ING) |
| BRDG | BRIDGING |
| BRG | BEARING |
| BRK | BRICK |
| BRKT | BRACKET |
| BS | BOTH SIDES |
| BSMT | BASEMENT |
| BT | BENT |
| BTWN | BETWEEN |
| BYD | BEYOND |
| C | STEEL CHANNEL |
| CAIS | CAISSON |
| CALC | CALCULATION |
| CANT | CANTILEVER |
| CAP | CAPACITY |
| C-C | CENTER-TO-CENTER |
| CE | CONCRETE ENCASED |
| CFM | COLD FORMED METAL |
| CHAM | CHAMFER |
| CI | CAST IRON |
| CIP | CAST IN PLACE |
| CJ | CONTROL/CONTRACTION JOINT |
| CL | CENTERLINE, COLUMN LINE |
| CLG | CEILING |
| CLR | CLEAR |
| CM | CONSTRUCTION MANAGER |
| CMU | CONCRETE MASONRY UNIT |
| COL | COLUMN |
| COMB | COMBINED |
| COMP | COMPOSITE |
| CONC | CONCRETE |
| COND | CONDITION |
| CONN | CONNECTION |
| CONST | CONSTRUCTION |
| CONT | CONTINUOUS |
| CONTR | CONTRACTOR |
| COORD | COORDINATE |
| COV | COVER |
| CP | CAP PLATE |
| CRSI | CONCRETE REINFORCING STEEL INSTITUTE |
| CSK | COUNTERSUNK |
| CTR | CENTER(ED) |
| CY | CUBIC YARD |
| CYL | CYLINDER |
| d | PENNY (AS IN NAIL, Id) |
| DBL | DOUBLE |
| DD | DESIGN DEVELOPMENT |
| DEF | DEFLECTION |
| DEG | DEGREE |
| DEMO | DEMOLITION/DEMOLISH |
| DEPR | DEPRESS(ED)/DEPRESSION |
| DET(S) | DETAIL(S) |
| DEV | DEVELOP/DEVELOPMENT |
| DIA | DIAMETER |
| DIAG | DIAGONAL |
| DIM(S) | DIMENSION(S) |
| DIR | DIRECTION |
| DK | DECK |
| DL | DEAD LOAD |
| DN | DOWN |
| do | DITTO |
| DP | DEEP |
| DW(G)(S) | DRAWING(S) |
| DWL | DOWEL |
| (E) | EXISTING |
| E | EAST |
| EA | EACH |
| EF | EACH FACE |
| EIFS | EXTERIOR INSULATION FINISH SYSTEM |
| EJ | EXPANSION JOINT |
| EL | ELEVATION |
| ELEC | ELECTRICAL |
| ELEV | ELEVATOR |
| EMBED | EMBEDMENT/EMBEDDED |
| ENGR | ENGINEER |
| EO | EDGE OF |
| EOD | EDGE OF DECK |
| EOM | EDGE OF MASONRY |
| EOS | EDGE OF SLAB |
| EQ | EQUAL |
| EQUIP | EQUIPMENT |
| ES | EACH SIDE |

| ABBR. | DESCRIPTION |
|---|---|
| ES | EACH SIDE |
| EXCAV | EXCAVATE/EXCAVATION |
| EXP | EXPANSION |
| EXT | EXTERIOR |
| EXIST | EXISTING |
| EW | EACH WAY |
| F/ | FACE OF |
| FAB | FABRICATE |
| FB | FLAT BAR |
| FBO | FURNISHED BY OTHERS |
| FDN | FOUNDATION |
| FFE | FINISHED FLOOR ELEVATION |
| FIN | FINISH(ED) |
| FL(R) | FLOOR |
| FLG | FLANGE |
| FND | FOUNDATION |
| FO | FACE OF |
| FOC | FACE OF CONCRETE |
| FOF | FACE OF FINISH |
| FOM | FACE OF MASONRY |
| FOS | FACE OF STUD |
| FP | FIREPROOFING |
| FRMG | FRAMING |
| FRP | FIBER-REINFORCED POLYMER |
| FRT | FIRE RETARDANT TREATED |
| FS | FAR SIDE |
| FT | FEET |
| FTG | FOOTING |
| FUT | FUTURE |
| FV | FIELD VERIFY |
| GA | GAUGE |
| GALV | GALVANIZE(D) |
| GB | GRADE BEAM |
| GC | GENERAL CONTRACTOR |
| GLB | GLUE LAMINATED BEAM |
| GR | GRADE |
| GYP | GYPSUM |
| HD | HEAVY DUTY |
| HDR | HEADER |
| HEF | HORIZONTAL EACH FACE |
| HGR | HANGER |
| HI | HIGH |
| HIF | HORIZONTAL INSIDE FACE |
| HK | HOOK(ED) |
| HOF | HORIZONTAL OUTSIDE FACE |
| HORIZ | HORIZONTAL |
| HP | HIGH POINT |
| HS | HIGH STRENGTH |
| HT | HEIGHT |
| H&V | HORIZONTAL & VERTICAL |
| HVAC | HEATING, VENTILATING & AIR CONDITIONING |
| IBC | INTERNATIONAL BUILDING COUNCIL |
| ICC | INTERNATIONAL CODE COUNCIL |
| ID | INSIDE DIAMETER |
| IF | INSIDE FACE |
| IFC | ISSUE FOR CONSTRUCTION |
| IN | INCH |
| INCL | INCLUDE(D)(ING) |
| INFO | INFORMATION |
| INSTL | INSTALL/INSTALLATION |
| INSUL | INSULATION |
| INT | INTERIOR |
| INV | INVERT(ED) |
| JST(S) | JOIST(S) |
| JT | JOINT |
| k | KIP (THOUSAND POUNDS) |
| KB | KNEE BRACE |
| KSI | KIPS PER SQUARE INCH |
| LB, # | POUND |
| LDGR | LEDGER (BOARD) |
| LEN | LENGTH |
| LG | LONG |
| LL | LIVE LOAD |
| LLBB | LONG LEGS BACK TO BACK |
| LLH | LONG LEG HORIZONTAL |
| LLV | LONG LEG VERTICAL |
| LOCN | LOCATION |
| LONGIT | LONGITUDINAL |
| LP | LOW POINT |
| LRFD | LOAD AND RESISTANCE FACTOR DESIGN |
| LSL | LONG SLOTTED HOLE, LAMINATED STRAND LUMBER |
| LVL | LAMINATED VENEER LUMBER |
| LW | LONG WAY |
| LWC | LIGHT WEIGHT CONCRETE |
| M | MOMENT |
| MAS | MASONRY |
| MATL | MATERIAL |
| MAX | MAXIMUM |
| MECH | MECHANICAL |
| MEP | MECHANICAL, ELECTRICAL & PLUMBING |
| MEZZ | MEZZANINE |
| MFR | MANUFACTURER |
| MIN | MINIMUM |
| MISC | MISCELLANEOUS |
| MO | MASONRY OPENING |
| MONO | MONOLITHIC |
| MPH | MILES PER HOUR |
| MTL | METAL |
| NA | NOT APPLICABLE |
| NDS | NATIONAL DESIGN SPECIFICATION FOR WOOD CONSTRUCTION |
| NIC | NOT IN CONTRACT |
| NO | NUMBER |
| NOM | NOMINAL |
| NS | NEAR SIDE |
| NTS | NOT TO SCALE |
| NWC | NORMAL WEIGHT CONCRETE |

| ABBR. | DESCRIPTION |
|---|---|
| OC | ON CENTER |
| OD | OUTSIDE DIAMETER |
| OF | OUTSIDE FACE |
| O-O | OUT-TO-OUT |
| OPG | OPENING |
| OPP | OPPOSITE |
| OSB | ORIENTED STRAND BOARD |
| OSHA | OCCUPATIONAL SAFETY AND HEALTH ADMINISTRATION |
| OSL | OUTSTANDING LEG, ORIENTED STRAND LUMBER |
| OVS | OVERSIZED HOLE |
| PAF | POWDER ACTUATED FASTENER |
| PC | PRECAST CONCRETE, PIECE |
| PCF | POUNDS PER CUBIC FOOT |
| PED | PEDESTAL |
| PERP | PERPENDICULAR |
| PREFAB | PREFABRICATE(D) |
| PL | PLATE |
| PLF | POUNDS PER LINEAR FOOT |
| PLYWD | PLYWOOD |
| PMF | PREMOLDED FILLER |
| PROJ | PROJECT(ION) |
| PSF | POUNDS PER SQUARE FOOT |
| PSI | POUNDS PER SQUARE INCH |
| PSL | PARALLEL STRAND LUMBER |
| PT | PRESERVATIVE-TREATED, POST-TENSIONED |
| PVC | POLYVINYL CHLORIDE |
| QTY | QUANTITY |
| R | RADIUS |
| RCMU | REINFORCED CONCRETE MASONRY UNIT |
| RCSC | RESEARCH COUNCIL ON STRUCTURAL CONNECTIONS |
| RD | ROOF DRAIN |
| RDK | ROOF DECK |
| REF | REFERENCE |
| REINF | REINFORCE(D)/REINFORCEMENT |
| REQ(D) | REQUIRE(D) |
| RET | RETAINING |
| REV | REVISE(D)/REVISION |
| RO | ROUGH OPENING |
| RQMT(S) | REQUIREMENT(S) |
| RTU | ROOFTOP UNIT |
| RXN | REACTION |
| SAN | SANITARY |
| SC | SLIP-CRITICAL (CONNECTION) |
| SCHED | SCHEDULE |
| SECT | SECTION |
| SD | STORM DRAIN |
| SDI | STEEL DECK INSTITUTE |
| SF | SQUARE FOOT |
| SHRG | SHORING |
| SHTHG | SHEATHING |
| SIM | SIMILAR |
| SL | SLOPE(D) |
| SLBB | SHORT LEGS BACK TO BACK |
| SLV | SLEEVE |
| SOD | SLAB ON DECK |
| SOG | SLAB ON GRADE |
| SPA | SPACE(S)/SPACING |
| SPEC(S) | SPECIFICATION(S) |
| SQ | SQUARE |
| SS | STAINLESS STEEL |
| SSL | SHORT SLOTTED HOLE |
| STD | STANDARD |
| STIFF | STIFFENER |
| STIR | STIRRUP |
| STL | STEEL |
| STRUC | STRUCTURAL |
| SUPT | SUPPORT |
| SW | SHORT WAY, SHEAR WALL |
| SYM | SYMMETRICAL |
| T | TOP |
| T/ | TOP OF |
| T&B | TOP AND BOTTOM |
| TB | TRUSS BEARING |
| TC | TERRA COTTA |
| TEMP | TEMPORARY,TEMPERATURE |
| T&G | TONGUE AND GROOVE |
| THD | THREAD(ED) |
| THK | THICK(NESS) |
| TMS | THE MASONRY SOCIETY |
| TOS | TOP OF SLAB |
| TYP | TYPICAL |
| UNO | UNLESS NOTED OTHERWISE |
| U-P | UNDERPINNING |
| V | SHEAR |
| VAR | VARIES |
| VB | VAPOR BARRIER |
| VEF | VERTICAL EACH FACE |
| VERT | VERTICAL |
| VIF | VERTICAL INSIDE FACE, VERIFY IN FIELD |
| VOF | VERTICAL OUTSIDE FACE |
| VR | VAPOR RETARDER |
| W/ | WITH |
| W/O | WITHOUT |
| WD | WOOD |
| WI | WROUGHT IRON |
| WP | WORK POINT, WATERPROOFING |
| WT | WEIGHT |
| WWF | WELDED WIRE FABRIC |
| XS | EXTRA STRONG |
| XXS | DOUBLE EXTRA STRONG |
| Ø | DIAMETER |
| ± | PLUS OR MINUS |

## SHEET LIST

| Sheet Number | Sheet Name |
|---|---|
| S-001 | GENERAL NOTES AND ABBREVIATIONS |
| SS101 | MANHOLE MH-10B PLANS & ELEVATIONS - PHASE 3 |
| SS102 | MANHOLE MH-16A PLANS & ELEVATIONS - PHASE 4 |
| SS103 | MANHOLE MH-17B PLANS & ELEVATIONS - PHASE 4 |
| SS104 | MANHOLE MH-15A PLANS & ELEVATIONS - PHASE 5 |
| SS105 | MANHOLE MH-17C PLANS & ELEVATIONS - PHASE 5 |
| SS106 | MANHOLE MH-15B PLANS & ELEVATIONS - PHASE 6 |
| S-301 | CONCRETE DETAILS AND SECTIONS |

| Revisions | Date |
|---|---|

CONSULTANT

ARCHITECT/ENGINEER OF RECORD

2014-2024 10TH ANNIVERSARY Above Group ENGINEERING | DESIGN | CONSULTING
SDVOSB CVE
www.abovegroupinc.com
COA/CA Lic. No. 31120
305 East Dr., Suite H,
Melbourne, Florida 32904
PH: 321.345.9026

STAMP

STATE OF MARYLAND RACHEL A. STERNBERG 45485 PROFESSIONAL ENGINEER

Office of Construction and Facilities Management

VA U.S. Department of Veterans Affairs

Drawing Title: GENERAL NOTES AND ABBREVIATIONS

Approved:

Phase: 100% CONSTRUCTION DOCUMENTS

FULLY SPRINKLERED

Project Title: STEAM LINE REPLACEMENT

Project Number: 659-24-903

Building Number:

Location: SALISBURY VAMC

Issue Date: 09/27/2024

Checked: RAS

Drawn: SLS

Drawing Number: S-001

VA FORM 08 - 6231

Autodesk Docs://9123056 - Salisbury Steam Line Replacement/9123056 - VA Salisbury Stm Line Repl - R23_S.rvt

9/27/2024 11:51:50 AM

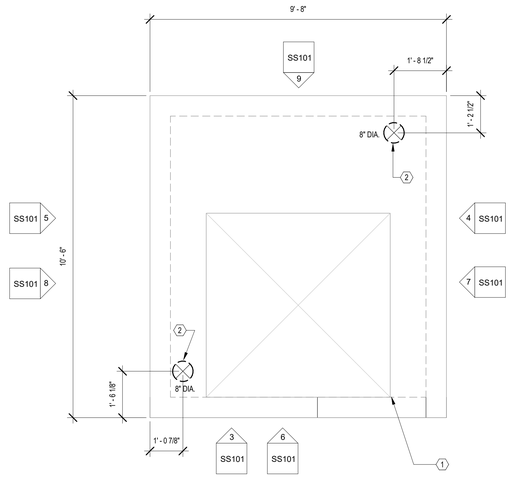


1 TOP OF MANHOLE - MH-10B
1/2" = 1'-0"

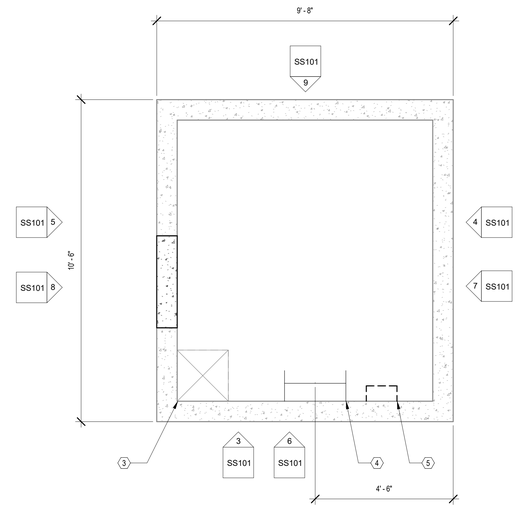


2 BOTTOM OF MANHOLE - MH-10B
1/2" = 1'-0"

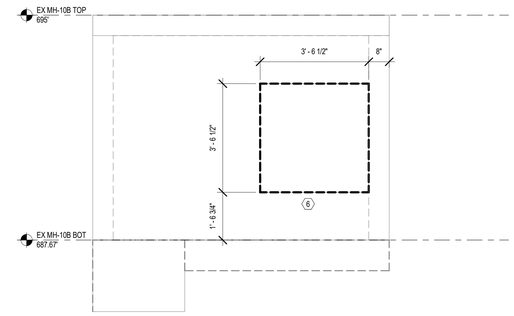


3 EAST ELEVATION - MH-10B - DEMO
1/2" = 1'-0"

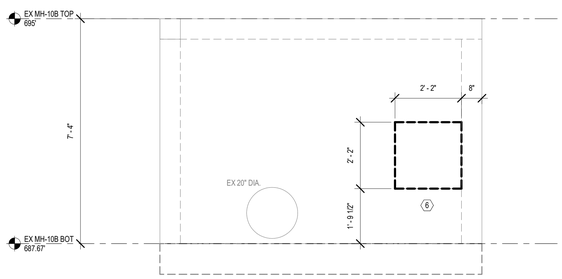


4 NORTH ELEVATION - MH-10B - DEMO
1/2" = 1'-0"

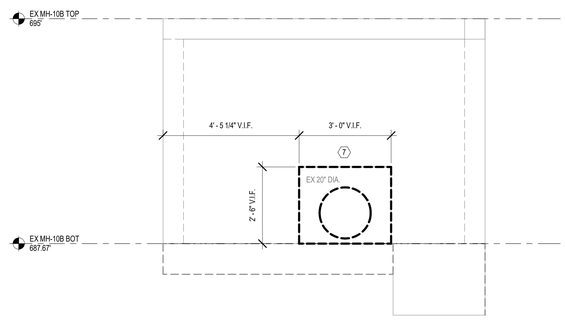


5 SOUTH ELEVATION - MH-10B -DEMO
1/2" = 1'-0"

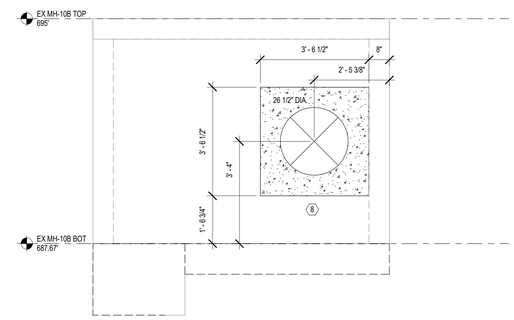


6 EAST ELEVATION - MH-10B
1/2" = 1'-0"

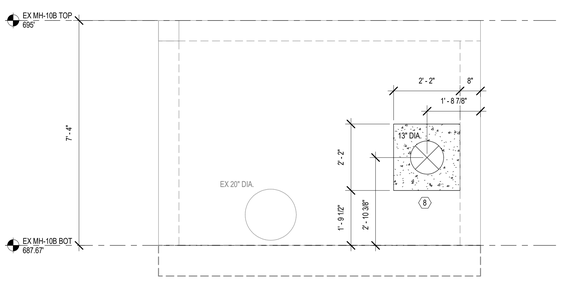


7 NORTH ELEVATION - MH-10B
1/2" = 1'-0"

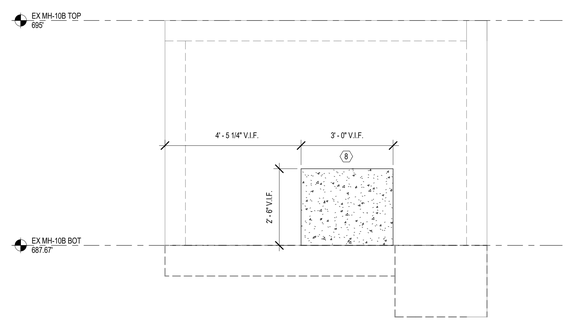


8 SOUTH ELEVATION - MH-10B
1/2" = 1'-0"

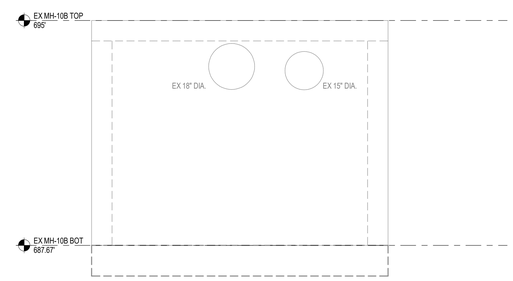


9 WEST ELEVATION - MH-10B
1/2" = 1'-0"

## DRAWING NOTES:

1. MANHOLE IS EXISTING. SIZE TO BE CONFIRMED BY CONTRACTOR PRIOR TO COMMENCING WORK.
2. SIDES OF MANHOLE EXPOSED DURING PIPE REPLACEMENT ARE TO RECEIVE NEW WATERPROOFING.
3. COORDINATE LOCATION OF PIPE PENETRATIONS WITH MECHANICAL DRAWINGS AND EXISTING CONDITIONS.

## CODED NOTES:

1. EXISTING ACCESS DOOR
2. CORE DRILL HOLES IN TOP OF EXISTING MANHOLE FOR VENT. GPR SCAN TOP OF MANHOLE AND LOCATE HOLE SUCH THAT NO REBAR IS CUT. CONTACT COR IF AREA IS TOO CONGESTED, VENT MAY NEED TO BE RELOCATED IN THAT CASE.
3. EXISTING SUMP PIT
4. NEW RUNG LADDER, REFER TO SPECIFICATIONS.
5. REMOVE EXISTING WALL RUNGS AND PATCH CONCRETE TO PROVIDE A SMOOTH SURFACE.
6. REMOVE PORTION OF CONCRETE WALL TO RECEIVE NEW CONCRETE WALL WITH PIPE PENETRATION, REFER TO DETAIL 5/ S-301.
7. REMOVE PORTION OF CONCRETE WALL AFTER EXISTING PIPE HAS BEEN TAKEN OFF LINE, REFER TO DETAIL 4/ S-301.
8. NEW CONCRETE WALL, REFER TO DETAIL 4/ S-301.

N 0 1' 2' 4' 6'
1/2" = 1'-0"

| Revisions | Date |
|---|---|
| | |

CONSULTANT

ARCHITECT/ENGINEER OF RECORD
2014-2024 10TH ANNIVERSARY
Above Group
ENGINEERING | DESIGN | CONSULTING
SDVOSB
www.abovegroupinc.com
COA/CA Lic. No. 31120
305 East Dr., Suite H,
Melbourne, Florida 32904
PH: 321.345.9026

STAMP
STATE OF MARYLAND
RAHUL A. STANDER
45488
PROFESSIONAL ENGINEER

Office of Construction and Facilities Management
VA U.S. Department of Veterans Affairs

Drawing Title: MANHOLE MH-10B PLANS & ELEVATIONS - PHASE 3
Approved:
Phase: 100% CONSTRUCTION DOCUMENTS
FULLY SPRINKLERED
Project Title: STEAM LINE REPLACEMENT
Location: SALISBURY VAMC
Issue Date: 09/27/2024
Checked: RAS
Drawn: SLS
Project Number: 659-24-903
Building Number:
Drawing Number: SS101

VA FORM 08 - 6231

Autodesk Docs://012306 - Salisbury Steam Line Replacement/012306 - VA Salisbury Strm Line Repl - R23_S.rvt 9/27/2024 11:51:56 AM

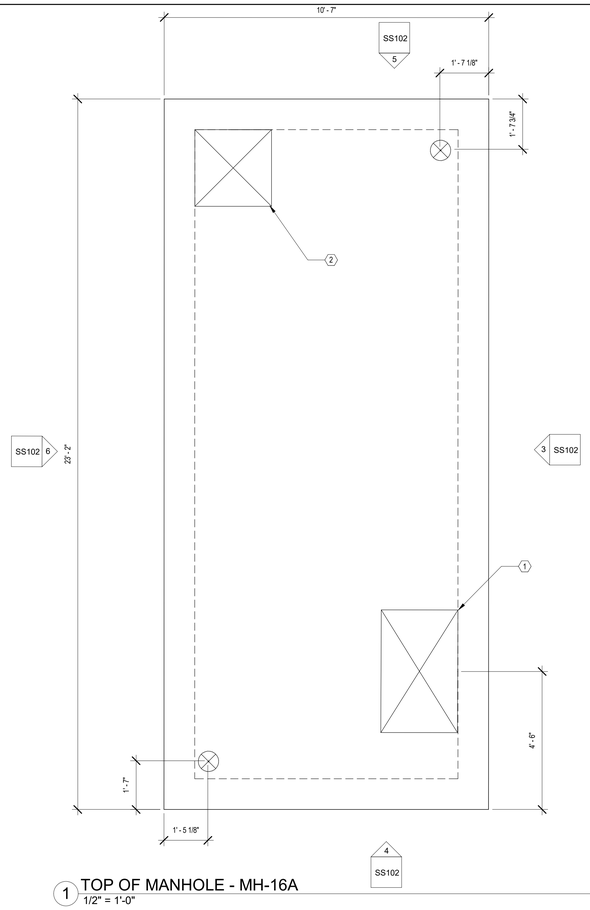


1 TOP OF MANHOLE - MH-16A
1/2" = 1'-0"

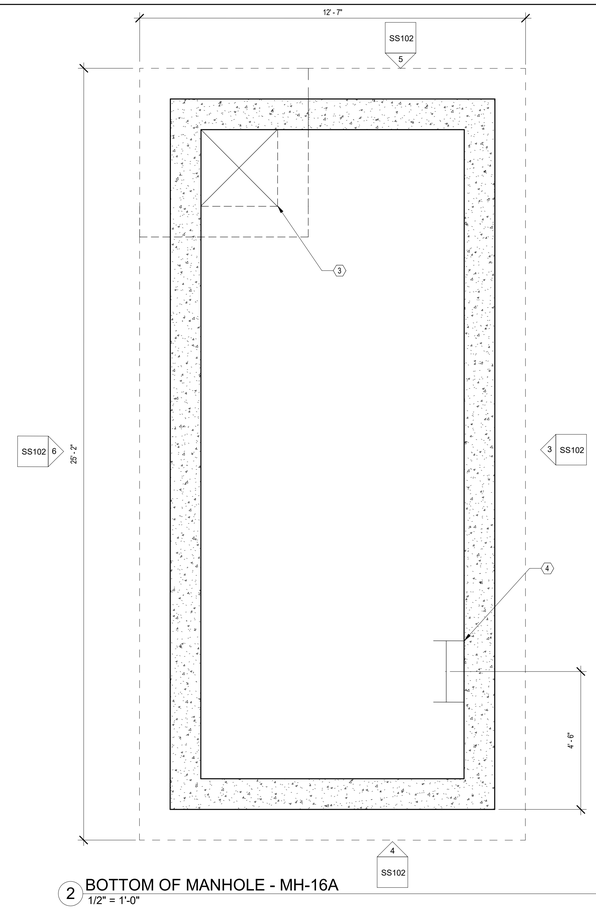


2 BOTTOM OF MANHOLE - MH-16A
1/2" = 1'-0"

## DRAWING NOTES:

1. NEW MANHOLE, REFER TO DETAIL 1/ S-301.
2. COORDINATE LOCATION ON MANHOLE WITH CIVIL DRAWINGS.
3. COORDINATE LOCATION OF PIPE PENETRATIONS WITH MECHANICAL DRAWINGS AND EXISTING CONDITIONS.
4. CONTRACTOR TO NOTE THAT NEW PENETRATIONS IN EXISTING BUILDING 16 BASEMENT WALL WILL BE REQUIRED FOR LINES INDICATED ON NORTH ELEVATION. THE EXISTING BASEMENT WALL EXTENDS 8'-0" BELOW THE FIRST FLOOR AND IS 12" THICK CONCRETE REINFORCED WITH #4 AT 14" O.C. PER ORIGINAL CONSTRUCTION DOCUMENTS. IF THE EXISTING CONDITION IS DETERMINED TO BE DIFFERENT THAN STATED ABOVE DURING EXCAVATION, CONTACT TO COR FOR REVIEW OF THE EXISTING CONDITION AND DETERMINATION OF PENETRATION LOCATION.

## CODED NOTES:

1. 30"x48" BILCO DOOR FOR PERSONNEL ACCESS
2. 30"x30" BILCO DOOR FOR SUMP PIT ACCESS
3. 30"x30" SUMP PIT
4. RUNG LADDER, REFER TO SPECIFICATIONS.

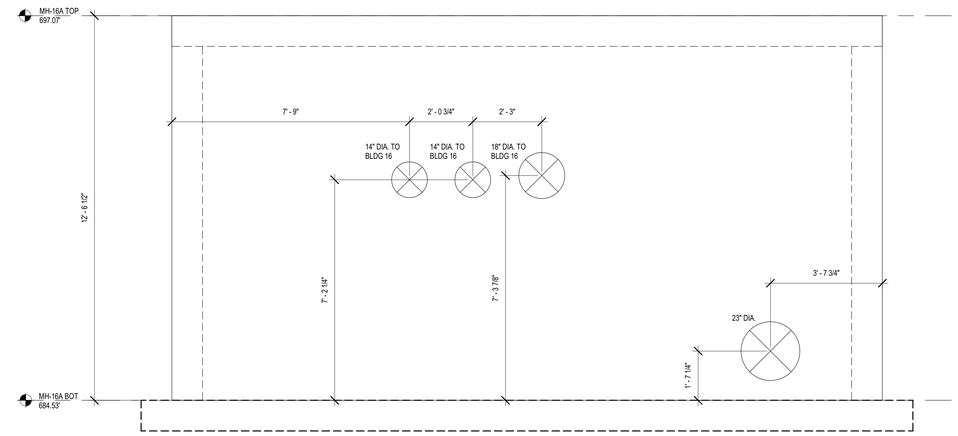


3 NORTH ELEVATION - MH-16A
1/2" = 1'-0"

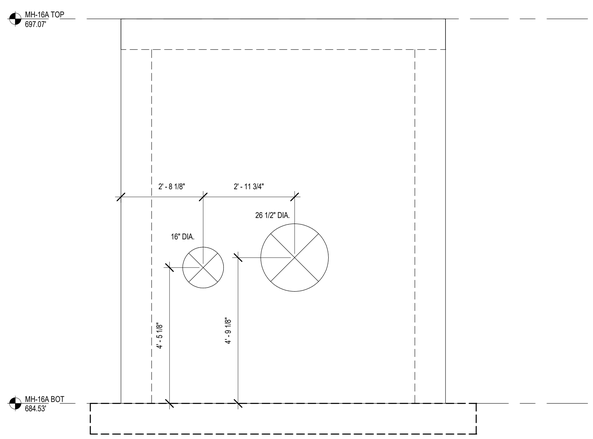


4 EAST ELEVATION - MH-16A
1/2" = 1'-0"

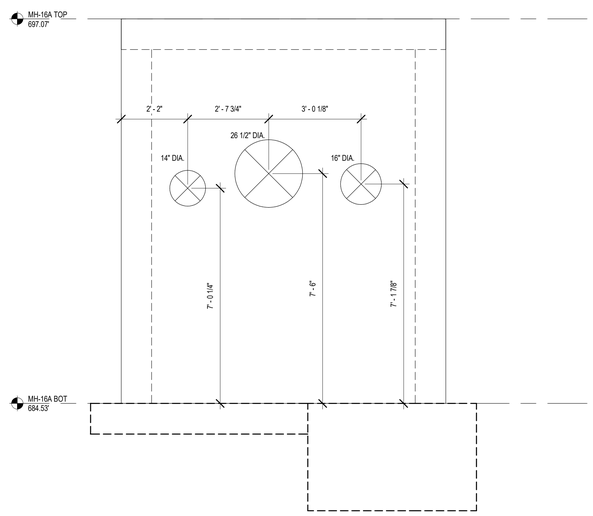


5 WEST ELEVATION - MH-16A
1/2" = 1'-0"

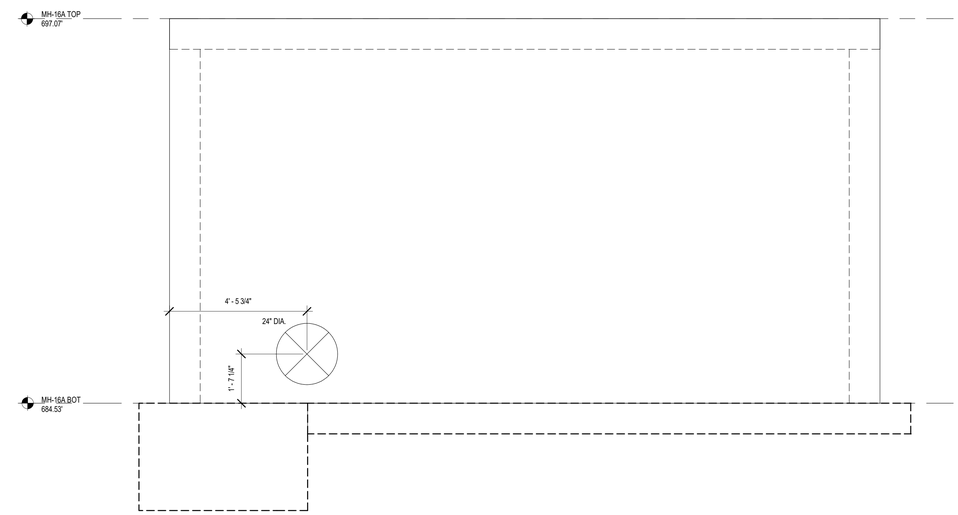


6 SOUTH ELEVATION - MH-16A
1/2" = 1'-0"

N 0 1' 2' 4' 6'
1/2" = 1'-0"

| Revisions | Date |
|---|---|

CONSULTANT

ARCHITECT/ENGINEER OF RECORD

2014-2024 10TH ANNIVERSARY Above Group ENGINEERING | DESIGN | CONSULTING
SDVOSB
www.abovegroupinc.com
COA/CA Lic. No. 31120
305 East Dr., Suite H, Melbourne, Florida 32904
PH: 321.345.9026

STAMP

STATE OF MARYLAND — RAHUL A. STANKEWAR — No. 45488 — PROFESSIONAL ENGINEER

Office of Construction and Facilities Management

VA U.S. Department of Veterans Affairs

| | | | |
|---|---|---|---|
| Drawing Title: MANHOLE MH-16A PLANS & ELEVATIONS - PHASE 4 | Phase: 100% CONSTRUCTION DOCUMENTS | Project Title: STEAM LINE REPLACEMENT | Project Number: 659-24-903 |
| Approved: | FULLY SPRINKLERED | Location: SALISBURY VAMC | Building Number: |
| | | Issue Date: 09/27/2024 · Checked: RAS · Drawn: SLS | Drawing Number: SS102 |

VA FORM 08 - 6231

Autodesk Docs://012306 - Salisbury Steam Line Replacement/012306 - VA Salisbury Stm Line Repl - R23_S.rvt
9/27/2024 11:51:58 AM

## DRAWING NOTES:

1. NEW MANHOLE, REFER TO DETAIL 1/ S-301.
2. COORDINATE LOCATION ON MANHOLE WITH CIVIL DRAWINGS.
3. COORDINATE LOCATION OF PIPE PENETRATIONS WITH MECHANICAL DRAWINGS AND EXISTING CONDITIONS.
4. CONTRACTOR TO NOTE THAT NEW PENETRATIONS IN EXISTING BUILDING 17 FOUNDATION WALL WILL BE REQUIRED FOR LINES INDICATED ON SOUTH ELEVATION. THE EXISTING FOUNDATION WALL EXTENDS APPROXIMATELY 2'-0" BELOW GRADE AND IS 12" THICK CONCRETE REINFORCED WITH #4 AT 12" O.C. PER ORIGINAL CONSTRUCTION DOCUMENTS. IF THE EXISTING CONDITION IS DETERMINED TO BE DIFFERENT THAN STATED ABOVE DURING EXCAVATION, CONTACT TO COR FOR REVIEW OF THE EXISTING CONDITION AND DETERMINATION OF PENETRATION LOCATION.

## CODED NOTES:

1. 30"x48" BILCO DOOR FOR PERSONNEL ACCESS
2. 30"x30" BILCO DOOR FOR SUMP PIT ACCESS
3. 30"x30" SUMP PIT
4. RUNG LADDER, REFER TO SPECIFICATIONS.

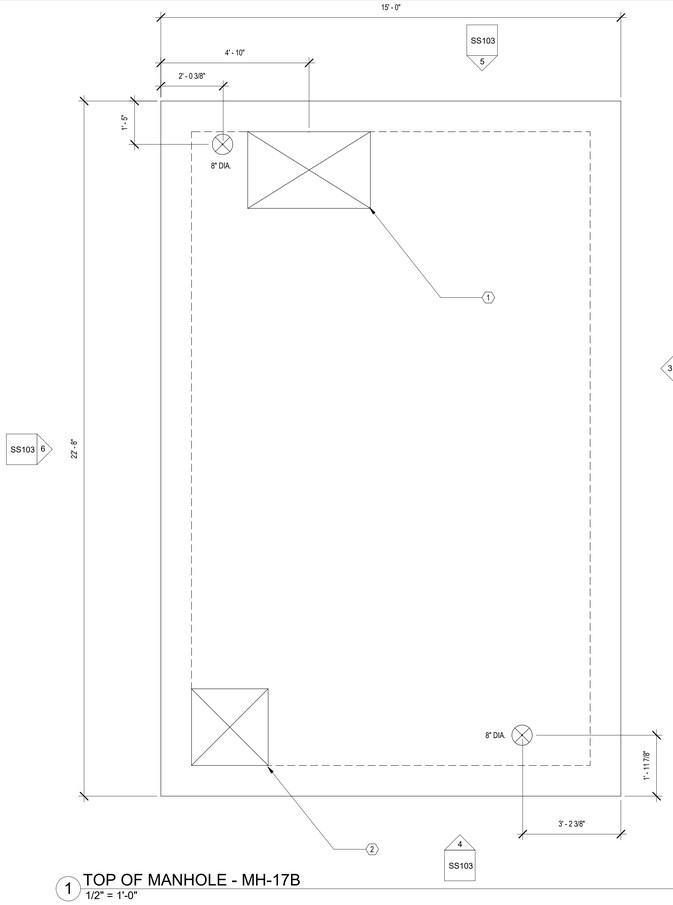


1 TOP OF MANHOLE - MH-17B
1/2" = 1'-0"

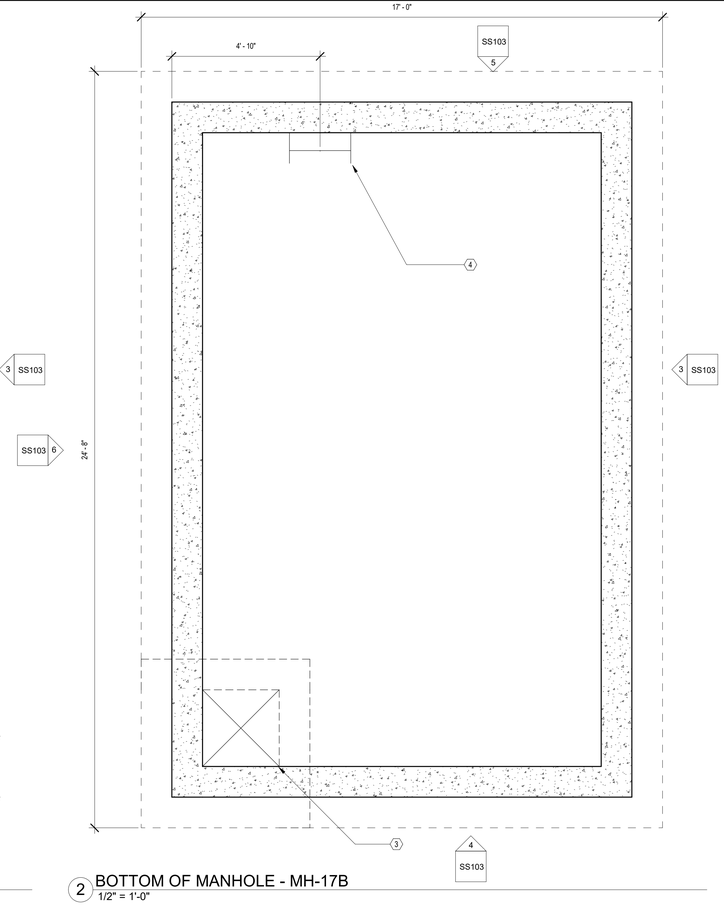


2 BOTTOM OF MANHOLE - MH-17B
1/2" = 1'-0"

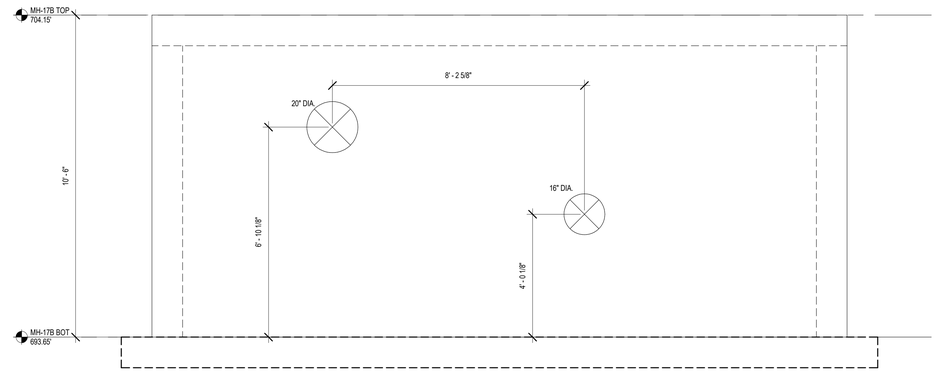


3 NORTH ELEVATION - MH-17B
1/2" = 1'-0"

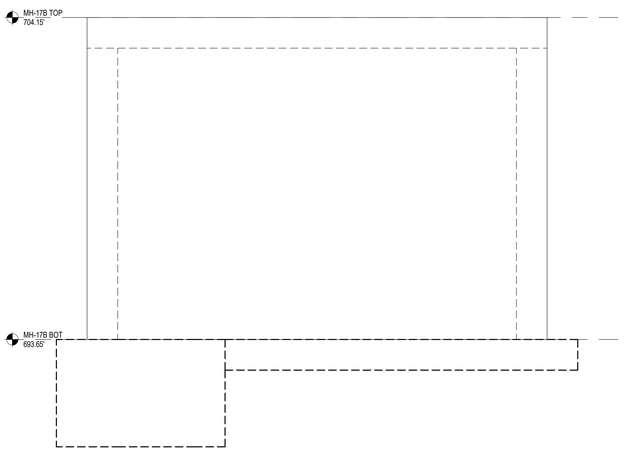


4 EAST ELEVATION - MH-17B
1/2" = 1'-0"

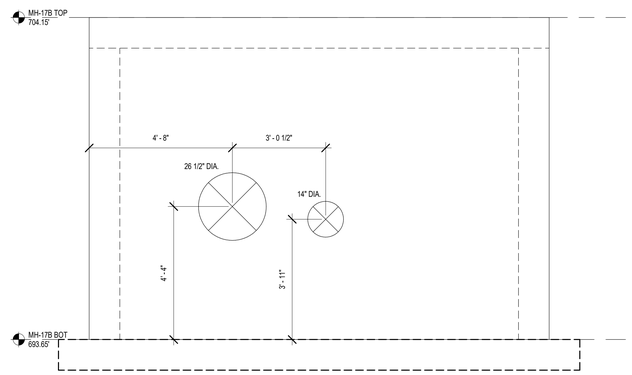


5 WEST ELEVATION - MH-17B
1/2" = 1'-0"

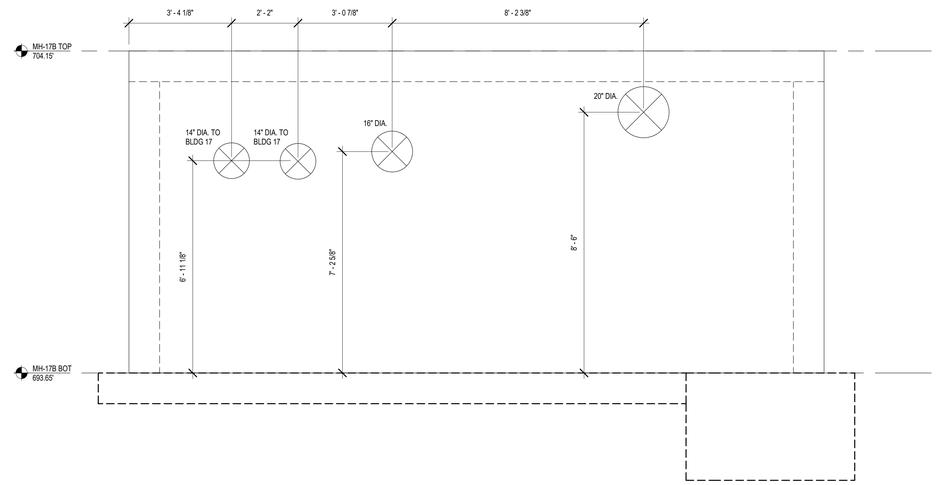


6 SOUTH ELEVATION - MH-17B
1/2" = 1'-0"

N 0 1' 2' 4' 6'
1/2" = 1'-0"

| Revisions | Date |
|---|---|
| | |

CONSULTANT

ARCHITECT/ENGINEER OF RECORD

2014-2024 10TH ANNIVERSARY
Above Group
ENGINEERING | DESIGN | CONSULTING
SDVOSB
www.abovegroupinc.com
COA/CA Lic. No. 31120
305 East Dr., Suite H,
Melbourne, Florida 32904
PH: 321.345.9026

STAMP

STATE OF MARYLAND
RACHEL A. STANFORD
45488
PROFESSIONAL ENGINEER

Office of Construction and Facilities Management

VA U.S. Department of Veterans Affairs

Drawing Title: MANHOLE MH-17B PLANS & ELEVATIONS - PHASE 4

Approved:

Phase: 100% CONSTRUCTION DOCUMENTS

FULLY SPRINKLERED

Project Title: STEAM LINE REPLACEMENT

Location: SALISBURY VAMC

Issue Date: 09/27/2024 | Checked: RAS | Drawn: SLS

Project Number: 659-24-903

Building Number:

Drawing Number: SS103

VA FORM 08 - 6231

Autodesk Docs://0123056 - Salisbury Steam Line Replacement/0123056 - VA Salisbury Stm Line Repl - R23_S.rvt 9/27/2024 11:52:00 AM

## DRAWING NOTES:

1. NEW MANHOLE, REFER TO DETAIL 1/ S-301.
2. COORDINATE LOCATION ON MANHOLE WITH CIVIL DRAWINGS.
3. COORDINATE LOCATION OF PIPE PENETRATIONS WITH MECHANICAL DRAWINGS AND EXISTING CONDITIONS.

## CODED NOTES:

1. 30"x48" BILCO DOOR FOR PERSONNEL ACCESS
2. 30"x30" BILCO DOOR FOR SUMP PIT ACCESS
3. 30"x30" SUMP PIT
4. RUNG LADDER, REFER TO SPECIFICATIONS.

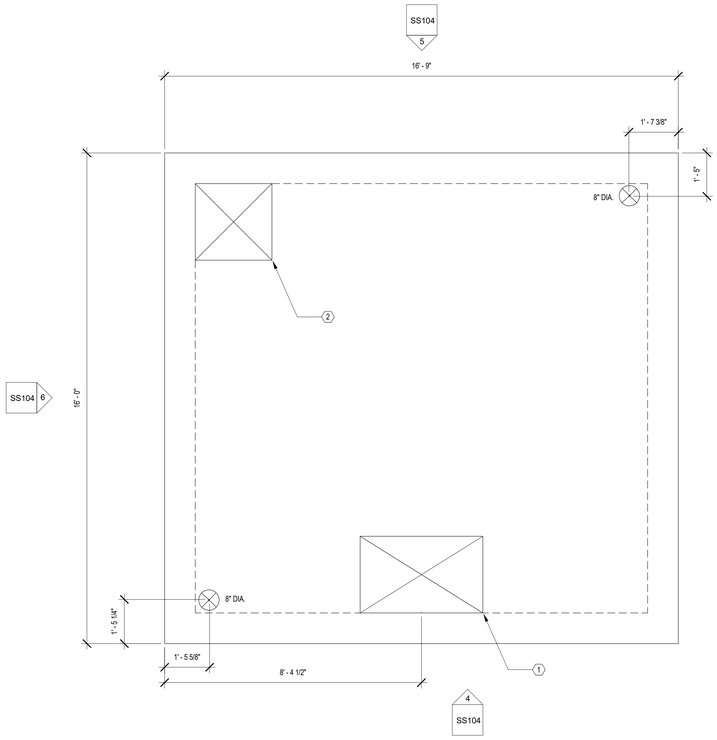


1 TOP OF MANHOLE - MH-15A
1/2" = 1'-0"

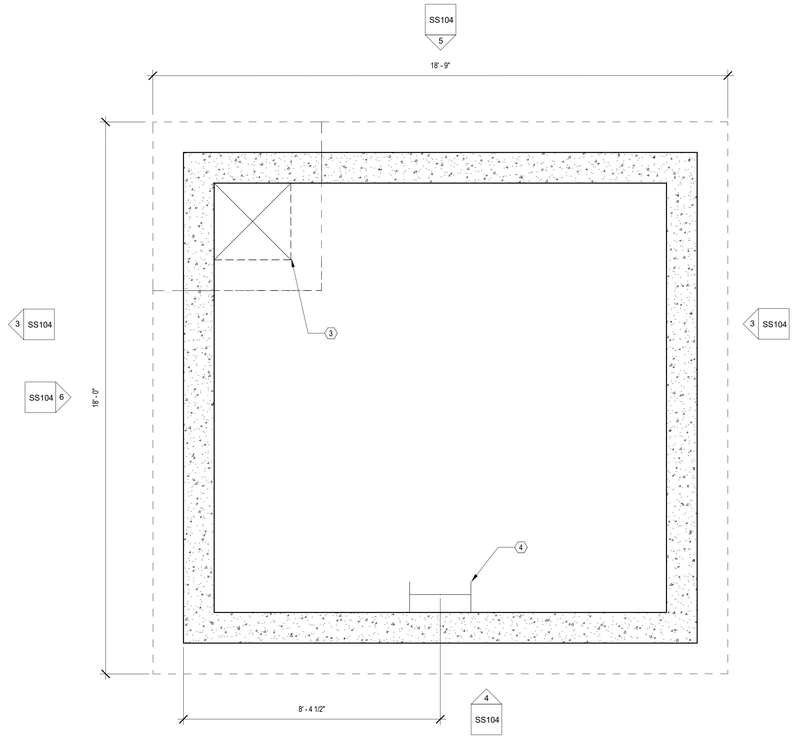


2 BOTTOM OF MANHOLE - MH-15A
1/2" = 1'-0"

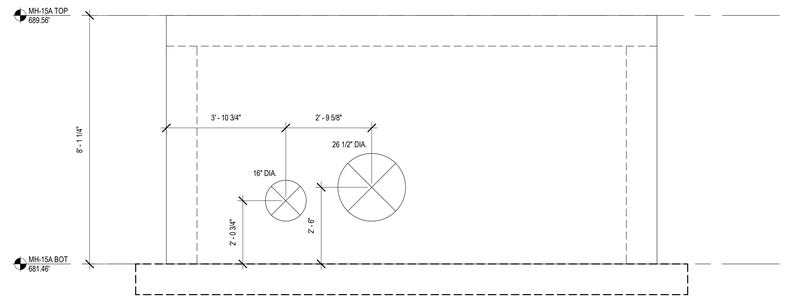


3 NORTH ELEVATION - MH-15A
1/2" = 1'-0"

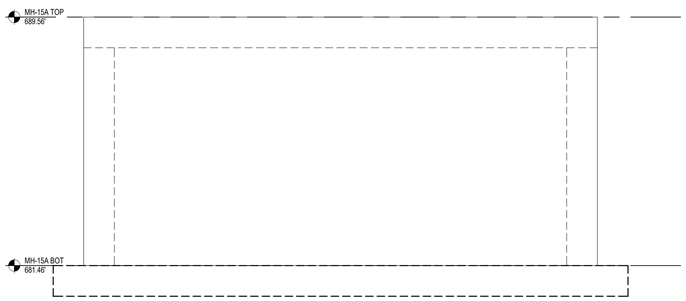


4 EAST ELEVATION - MH-15A
1/2" = 1'-0"

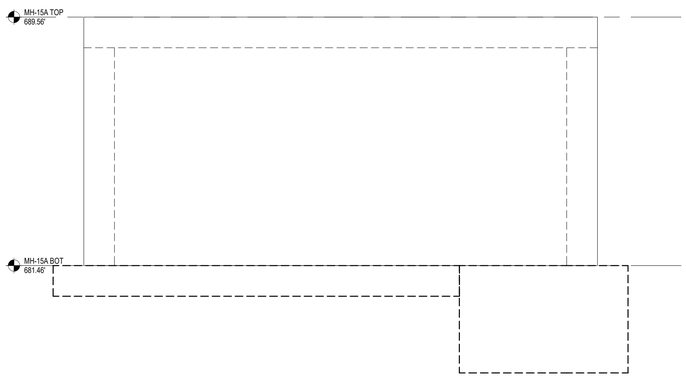


5 WEST ELEVATION - MH-15A
1/2" = 1'-0"

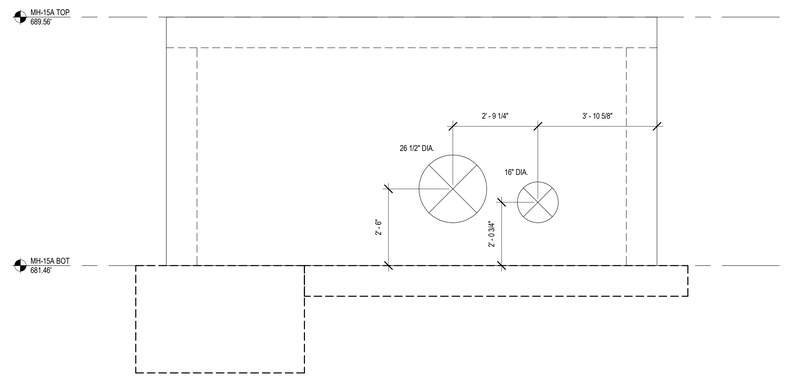


6 SOUTH ELEVATION - MH-15A
1/2" = 1'-0"

N 0 1' 2' 4' 6'
1/2" = 1'-0"

| Revisions | Date |
|---|---|

CONSULTANT

ARCHITECT/ENGINEER OF RECORD

2014-2024 10TH ANNIVERSARY Above Group ENGINEERING | DESIGN | CONSULTING
SDVOSB
www.abovegroupinc.com
COA/CA Lic. No. 31120
305 East Dr., Suite H,
Melbourne, Florida 32904
PH: 321.345.9026

STAMP

STATE OF MARYLAND RACHEL A. STABLER 45498 PROFESSIONAL ENGINEER

Office of Construction and Facilities Management

VA U.S. Department of Veterans Affairs

| | | | |
|---|---|---|---|
| Drawing Title: MANHOLE MH-15A PLANS & ELEVATIONS - PHASE 5 | Phase: 100% CONSTRUCTION DOCUMENTS | Project Title: STEAM LINE REPLACEMENT | Project Number: 659-24-903 |
| Approved: | FULLY SPRINKLERED | Location: SALISBURY VAMC | Building Number: |
| | | Issue Date: 09/27/2024 · Checked: RAS · Drawn: SLS | Drawing Number: SS104 |

VA FORM 08 - 6231

Autodesk Docs://012306 - Salisbury Steam Line Replacement/012306 - VA Salisbury Stm Line Rep - R23_S.rvt 9/27/2024 11:52:03 AM

## DRAWING NOTES:

1. NEW MANHOLE, REFER TO DETAIL 1/ S-301.
2. COORDINATE LOCATION ON MANHOLE WITH CIVIL DRAWINGS.
3. COORDINATE LOCATION OF PIPE PENETRATIONS WITH MECHANICAL DRAWINGS AND EXISTING CONDITIONS.

## CODED NOTES:

1. 30"x48" BILCO DOOR FOR PERSONNEL ACCESS
2. 30"x30" BILCO DOOR FOR SUMP PIT ACCESS
3. 30"x30" SUMP PIT
4. RUNG LADDER, REFER TO SPECIFICATIONS.

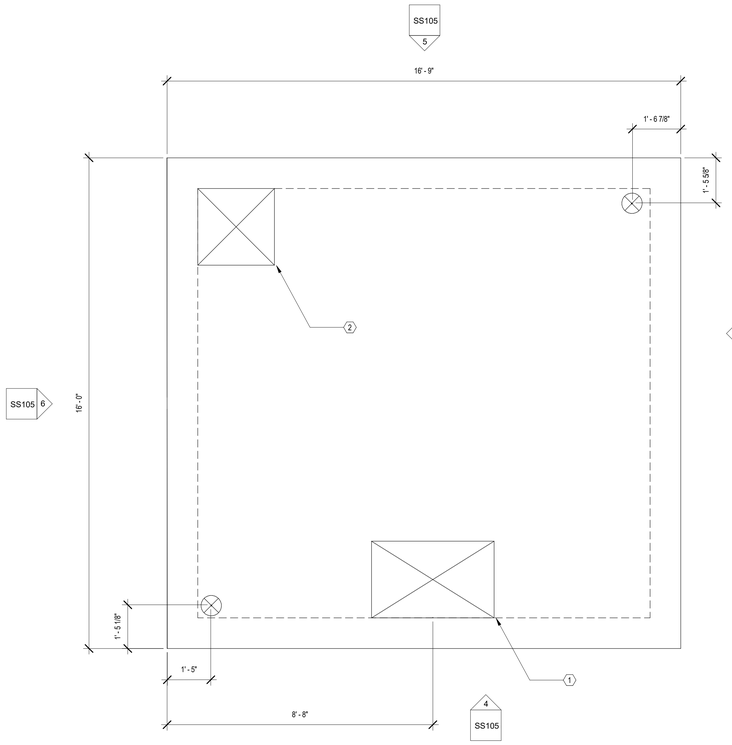


1 TOP OF MANHOLE - MH-17C
1/2" = 1'-0"

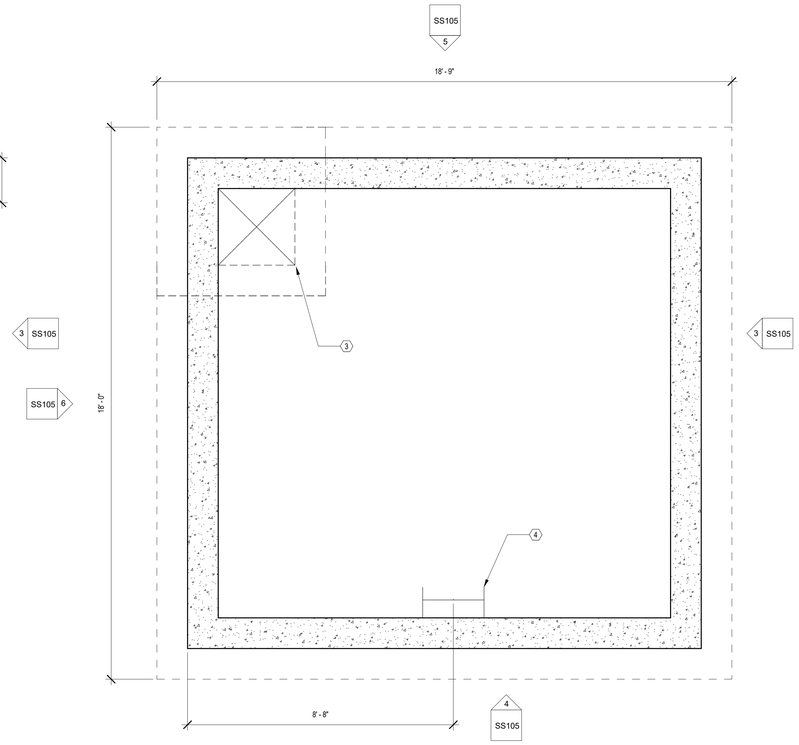


2 BOTTOM OF MANHOLE - MH-17C
1/2" = 1'-0"

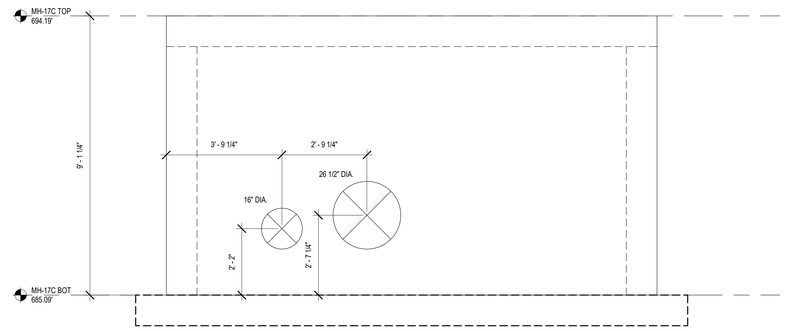


3 NORTH ELEVATION - MH-17C
1/2" = 1'-0"

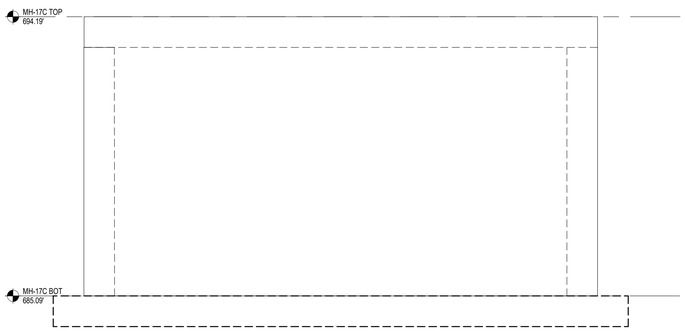


4 EAST ELEVATION - MH-17C
1/2" = 1'-0"

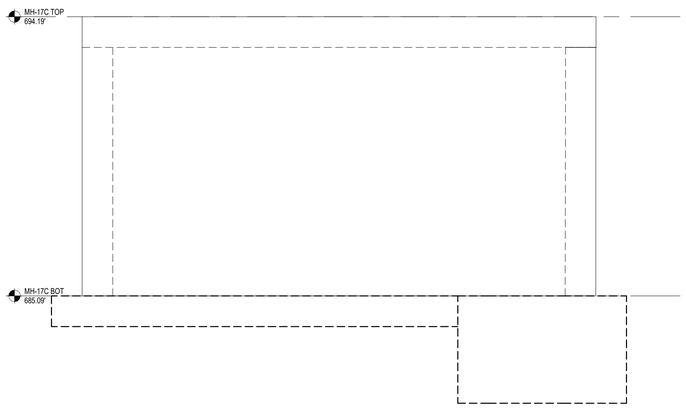


5 WEST ELEVATION - MH-17C
1/2" = 1'-0"

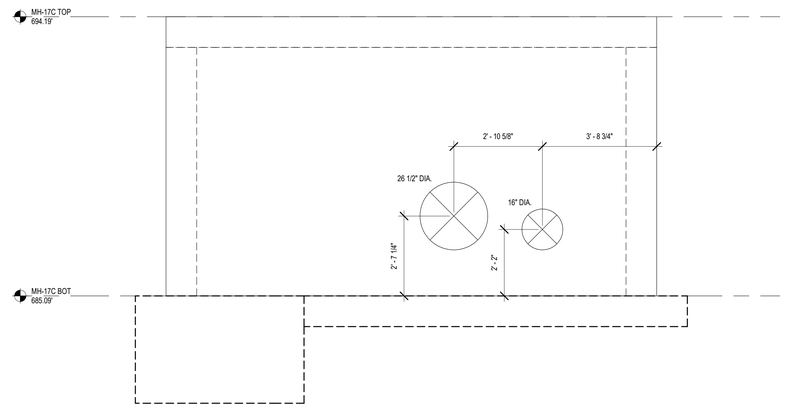


6 SOUTH ELEVATION - MH-17C
1/2" = 1'-0"

N 0 1' 2' 4' 6'
1/2" = 1'-0"

| Revisions | Date |
|---|---|

CONSULTANT

ARCHITECT/ENGINEER OF RECORD

2014-2024 10TH ANNIVERSARY Above Group ENGINEERING | DESIGN | CONSULTING
SDVOSB
www.abovegroupinc.com
COA/CA Lic. No. 31120
305 East Dr., Suite H,
Melbourne, Florida 32904
PH: 321.345.9026

STAMP

STATE OF MARYLAND RACHEL A. ST. BRIDGE 45498 PROFESSIONAL ENGINEER

Office of Construction and Facilities Management

VA U.S. Department of Veterans Affairs

Drawing Title: MANHOLE MH-17C PLANS & ELEVATIONS - PHASE 5

Approved:

Phase: 100% CONSTRUCTION DOCUMENTS

FULLY SPRINKLERED

Project Title: STEAM LINE REPLACEMENT

Location: SALISBURY VAMC

Issue Date: 09/27/2024 | Checked: RAS | Drawn: SLS

Project Number: 659-24-903

Building Number:

Drawing Number: SS105

VA FORM 08 - 6231

Autodesk Docs://01230/56 - Salisbury Steam Line Replacement/01230/56 - VA Salisbury Stm Line Repl - R23_S.rvt 9/27/2024 11:52:04 AM

## DRAWING NOTES:

1. NEW MANHOLE, REFER TO DETAIL 1/ S-301.
2. COORDINATE LOCATION ON MANHOLE WITH CIVIL DRAWINGS.
3. COORDINATE LOCATION OF PIPE PENETRATIONS WITH MECHANICAL DRAWINGS AND EXISTING CONDITIONS.

## CODED NOTES:

1. 30"x48" BILCO DOOR FOR PERSONNEL ACCESS
2. 30"x30" BILCO DOOR FOR SUMP PIT ACCESS
3. 30"x30" SUMP PIT
4. RUNG LADDER, REFER TO SPECIFICATIONS.

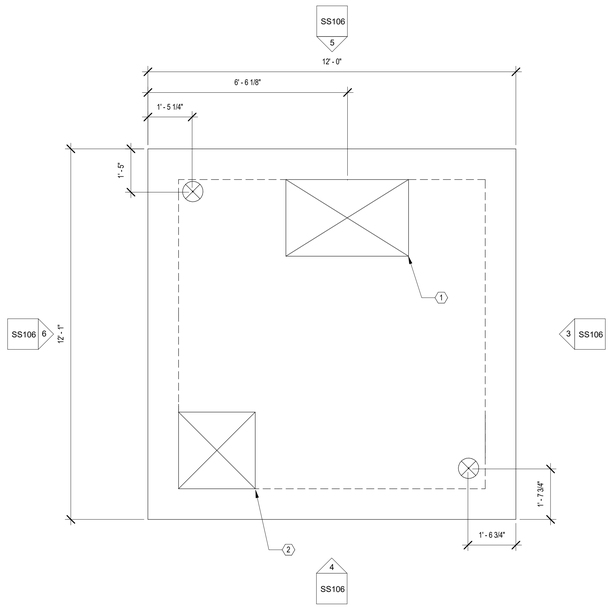


1 TOP OF MANHOLE - MH-15B
1/2" = 1'-0"

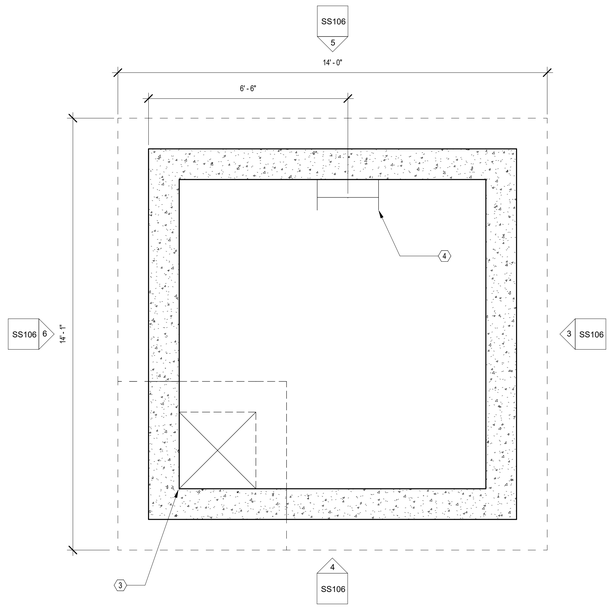


2 BOTTOM OF MANHOLE - MH-15B
1/2" = 1'-0"

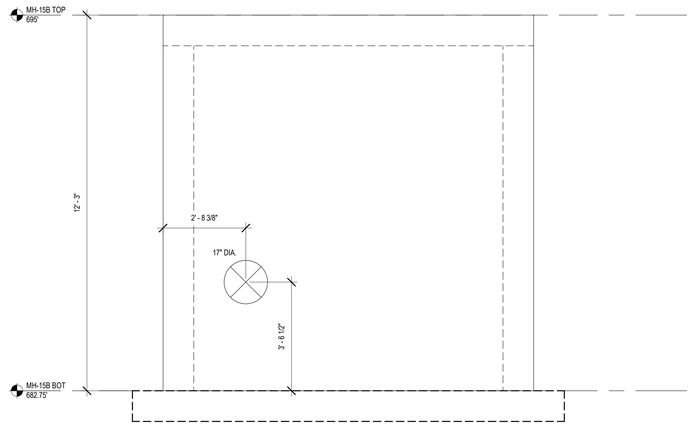


3 NORTH ELEVATION - MH-15B
1/2" = 1'-0"

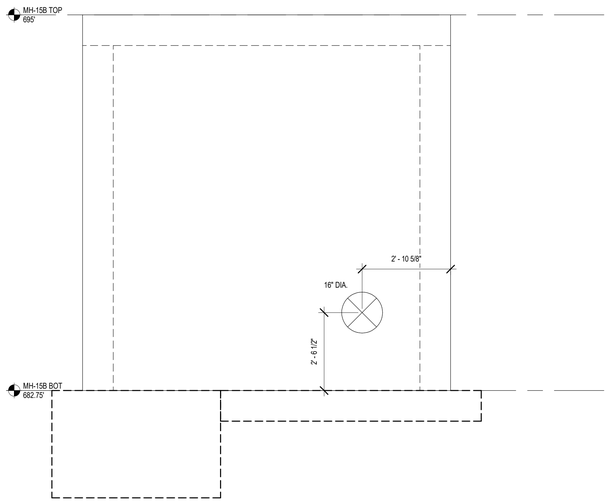


4 EAST ELEVATION - MH-15B
1/2" = 1'-0"

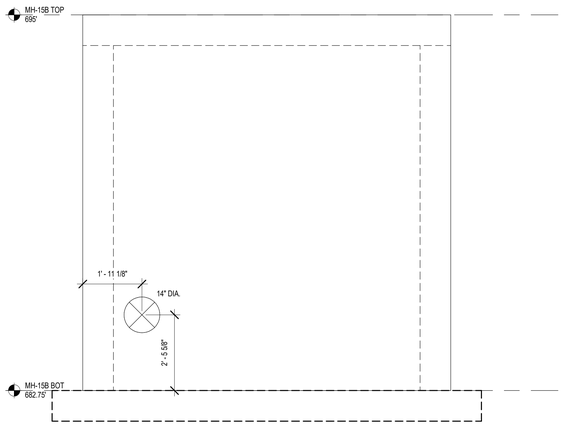


5 WEST ELEVATION - MH-15B
1/2" = 1'-0"

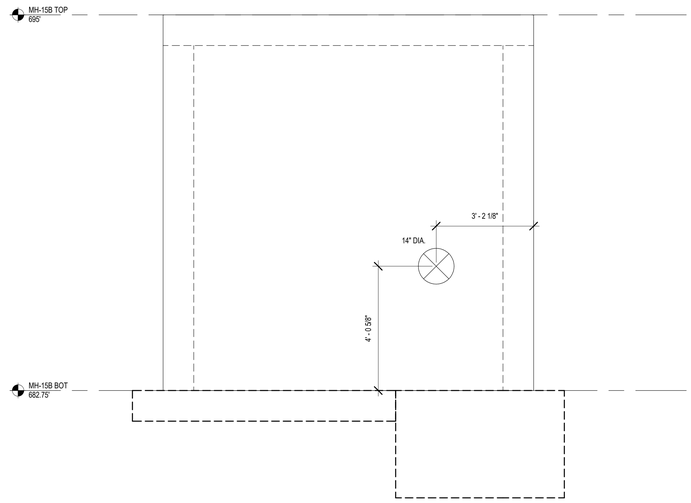


6 SOUTH ELEVATION - MH-15B
1/2" = 1'-0"

N 0 1' 2' 4' 6'
1/2" = 1'-0"

| Revisions | Date |
|---|---|

CONSULTANT

ARCHITECT/ENGINEER OF RECORD

2014-2024 10TH ANNIVERSARY Above Group ENGINEERING | DESIGN | CONSULTING

www.abovegroupinc.com
COA/CA Lic. No. 31120

305 East Dr., Suite H,
Melbourne, Florida 32904
PH: 321.345.9026

STAMP

STATE OF MARYLAND — RACHEL A. ST. BERNARD — 45498 — PROFESSIONAL ENGINEER

Office of Construction and Facilities Management

VA U.S. Department of Veterans Affairs

| | | | |
|---|---|---|---|
| Drawing Title: MANHOLE MH-15B PLANS & ELEVATIONS - PHASE 6 | Phase: 100% CONSTRUCTION DOCUMENTS | Project Title: STEAM LINE REPLACEMENT | Project Number: 659-24-903 |
| | | | Building Number: |
| Approved: | FULLY SPRINKLERED | Location: SALISBURY VAMC | Drawing Number: SS106 |
| | | Issue Date: 09/27/2024 · Checked: RAS · Drawn: SLS | |

VA FORM 08 - 6231

Autodesk Docs://012306 - Salisbury Steam Line Replacement/012306 - VA Salisbury Stm Line Repl - R23_S.rvt 9/27/2024 11:52:05 AM

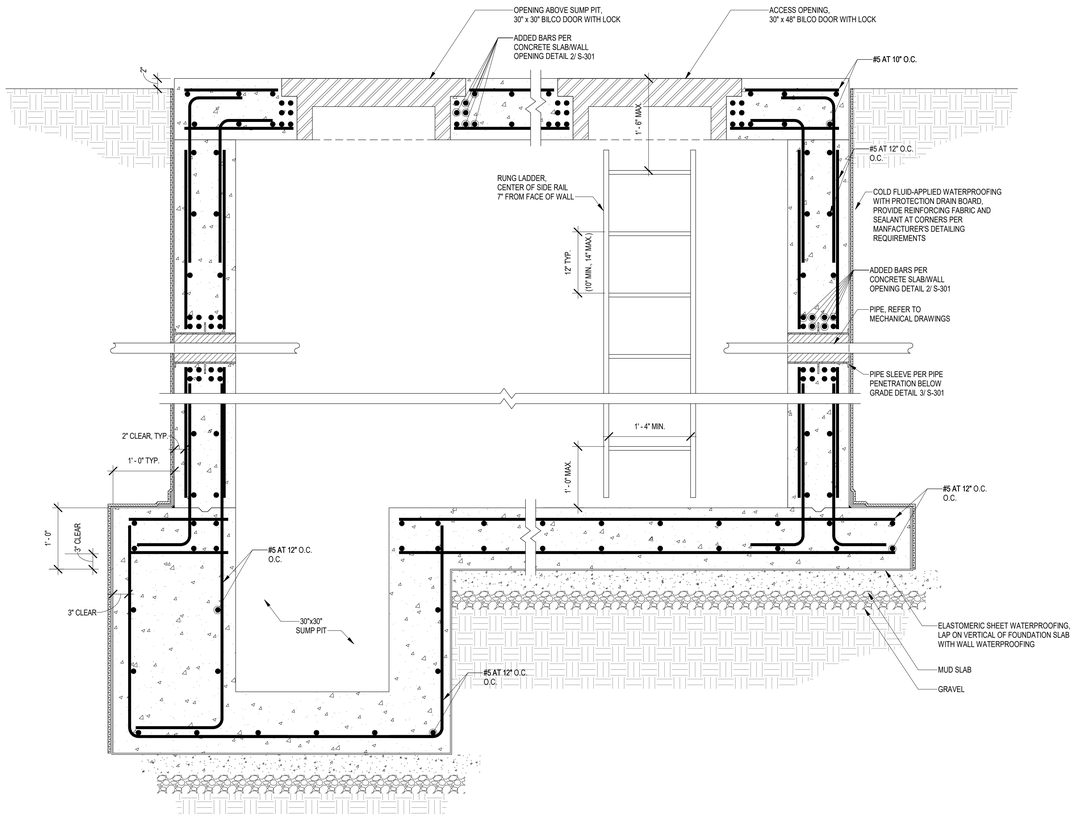


1 MANHOLE DETAIL
N.T.S.

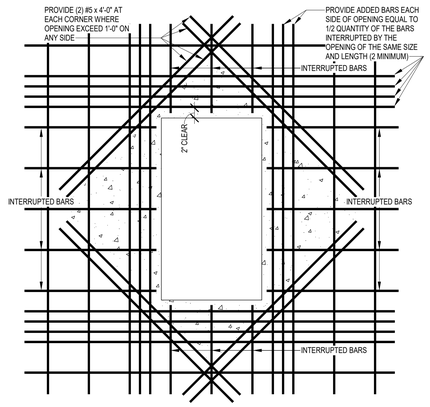


2 CONCRETE SLAB/WALL OPENING DETAIL
N.T.S.

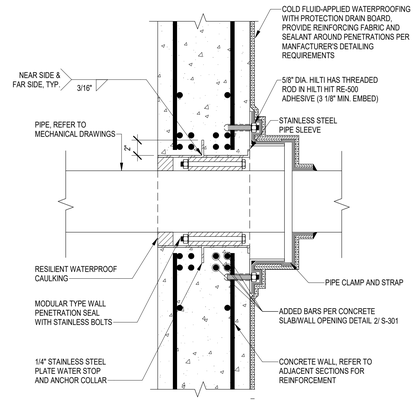


3 CONCRETE PIPE PENETRATION BELOW GRADE DETAIL
N.T.S.

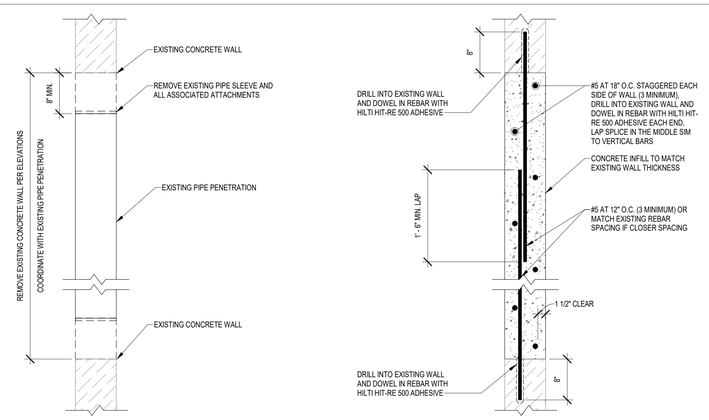


4 CONCRETE WALL OPENING INFILL DETAIL
N.T.S.

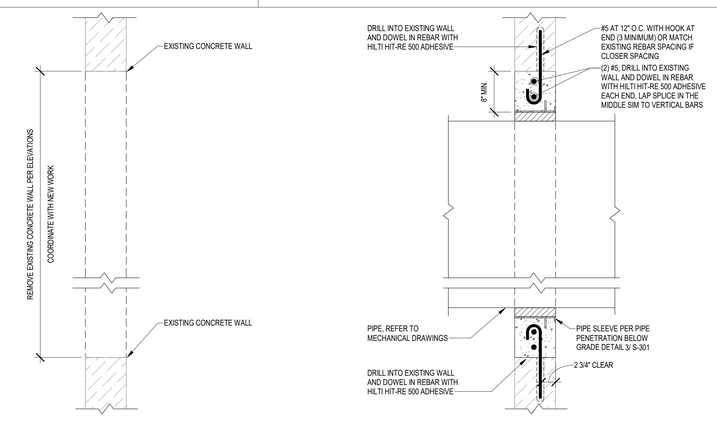


5 NEW PENETRATION IN EXISTING CONCRETE WALL DETAIL
N.T.S.

| Revisions | Date |
|---|---|

CONSULTANT

ARCHITECT/ENGINEER OF RECORD

2014-2024 10TH ANNIVERSARY Above Group ENGINEERING | DESIGN | CONSULTING
SDVOSB
www.abovegroupinc.com
COA/CA Lic. No. 31120
305 East Dr., Suite H, Melbourne, Florida 32904
PH: 321.345.9026

STAMP
STATE OF MARYLAND — FRANCIS A. STEWART — No. 45488 — PROFESSIONAL ENGINEER

Office of Construction and Facilities Management

VA U.S. Department of Veterans Affairs

| Drawing Title | Phase | Project Title | Project Number |
|---|---|---|---|
| CONCRETE DETAILS AND SECTIONS | 100% CONSTRUCTION DOCUMENTS | STEAM LINE REPLACEMENT | 659-24-903 |
| | | | Building Number |
| Approved: | FULLY SPRINKLERED | Location: SALISBURY VAMC | Drawing Number |
| | | Issue Date: 09/27/2024 · Checked: RAS · Drawn: SLS | S-301 |

VA FORM 08 - 6231

Autodesk Docs://0123056 - Salisbury Steam Line Replacement/0123056 - VA Salisbury Stm Line Repl - R23_S.rvt
9/27/2024 11:52:07 AM

# PIPING LEGEND

| SYMBOL | DESCRIPTION |
|---|---|
| CWS | CONDENSER WATER SUPPLY |
| CWR | CONDENSER WATER RETURN |
| CHWS | CHILLED WATER SUPPLY |
| CHWR | CHILLED WATER RETURN |
| HHWS | HEATING HOT WATER SUPPLY |
| HHWR | HEATING HOT WATER RETURN |
| CD | CONDENSATE |
| R | REFRIGERANT LIQUID AND SUCTION LINES |
| | FLOW DIRECTION |
| | FLANGES |
| | UNION |
| | PIPE ANCHORS |
| | CONCENTRIC REDUCER |
| | ECCENTRIC REDUCER |
| | AUTOMATIC AIR VENT |
| | MANUAL VENT |
| FM | FLOW METER |
| | INLINE PUMP |
| | CAP |
| | HOSE CONNECTION |
| | ANGLE GLOBE VALVE |
| | RELIEF VALVE |
| | THERMOMETER |
| | PRESSURE GAUGE WITH SHUTOFF |
| | TEST PLUG (PRESSURE/TEMPERATURE) |
| | FLOW SWITCH |
| | PRESSURE SWITCH |
| EQUIP. | P-TRAP |
| | ELBOW, 90° |
| | ELBOW, 45° |
| R R | 45° PIPE RISE (R)/DROP (D) |

| SYMBOL | DESCRIPTION |
|---|---|
| | BALL VALVE |
| | GATE VALVE |
| | GLOBE VALVE |
| | BUTTERFLY VALVE |
| | THREE-WAY VALVE |
| | CHECK VALVE |
| | STRAINER |
| | CIRCUIT SETTER VALVE |
| | PRESSURE REGULATING VALVE |
| M | MOTORIZED ACTUATOR |
| | SOLENOID VALVE (2-POSTION W/ ACTUATOR) |
| | ELBOW, TURNED DOWN |
| | ELBOW, TURNED UP |
| | TEE, OUTLET DOWN |
| | TEE, OUTLET UP |
| | TEE, SIDE CONNECTION |
| | FLEX CONNECTION (DOUBLE SPHERE FOR PIPES 6" AND LARGER; SINGLE SPHERE FOR PIPES 4" AND SMALLER |
| P | PNEUMATIC ACTUATOR |

# HVAC ABBREVIATIONS

| SYMBOL | DESCRIPTION |
|---|---|
| A/E | ARCHITECT / ENGINEER |
| ABD | ABANDONED |
| ADA | AMERICANS WITH DISABILITIES ACT |
| AFF | ABOVE FINISHED FLOOR |
| AFR | ABOVE FINISHED ROOF |
| AHU | AIR HANDLING UNIT |
| AP | ACCESS PANEL |
| APPROX | APPROXIMATE |
| ASTM | AMERICAN STANDARDS TESTING MATERIALS |
| BAS | BUILDING AUTOMATION SYSTEM |
| BOP | BOTTOM OF PIPE |
| BHP | BRAKE HORSEPOWER |
| BFV | BUTTERFLY VALVE |
| BTU | BRITISH THERMAL UNIT |
| CAV | CONSTANT AIR VOLUME |
| CD | CONDENSATE |
| CFM | CUBIC FEET PER MINUTE |
| CL | CENTER LINE |
| CO | CLEAN OUT |
| COR | CONTRACTING OFFICER'S REPRESENTATIVE |
| CT | COOLING TOWER |
| CU | CONDENSING UNIT |
| DB | DRY BULB |
| DDC | DIRECT DIGITAL CONTROLS |
| DN | DOWN |
| EA | EXHAUST AIR |
| EAT | ENTERING AIR TEMPERATURE |
| ECC | ENGINEERING CONTROL CENTER |
| EER | ENERGY EFFICIENCY RATING |
| EQUIP | EQUIPMENT |
| ESP | EXTERNAL STATIC PRESSURE |
| ETR | EXISTING TO REMAIN |
| EWT | ENTERING WATER TEMPERATURE |
| EX | EXISTING |
| °F | DEGREES FAHRENHEIT |
| FAS | FIRE ALARM SYSTEM |
| FE | FLUE EXHAUST |
| FLA | FULL LOAD AMPS |
| FPM | FEET PER MINUTE |
| FT | FEET |
| GPM | GALLONS PER MINUTE |
| HP | HORSEPOWER |
| HPC | HIGH PRESSURE CONDENSATE |
| HPS | HIGH PRESSURE STEAM |
| HR | HOUR |
| HZ | HERTZ |
| IN | INCHES |
| KW | KILOWATT |
| LWT | LEAVING WATER TEMPERATURE |

| SYMBOL | DESCRIPTION |
|---|---|
| MAX | MAXIMUM |
| MBH | THOUSAND BTUs PER HOUR |
| MCA | MINIMUM CIRCUIT AMPS |
| MIN | MINIMUM |
| MOCP | MAXIMUM OVER CURRENT PROTECTION |
| MOD | MOTORIZED CONTROL DAMPER |
| NA | NOT APPLICABLE |
| NC | NORMALLY CLOSED |
| NIC | NOT IN CONTRACT |
| NO | NORMALLY OPEN |
| NTS | NOT TO SCALE |
| OA | OUTSIDE AIR |
| OAT | OUTSIDE AIR TEMPERATURE |
| PC | PUMPED CONDENSATE |
| PH | PHASE |
| PRV | PRESSURE REDUCING VALVE |
| PRS | PRESSURE REDUCING STATION |
| PSI | POUNDS PER SQUARE INCH |
| PSIG | PSI GAUGE |
| PTAC | PACKAGED TERMINAL AIR CONDITIONER |
| PVC | POLYVINYL CHLORIDE PIPE |
| RA | RETURN AIR |
| RH | RELATIVE HUMIDITY |
| RHC | REHEAT COIL |
| RHP | ROOFTOP HEAT PUMP |
| RPM | REVOLUTIONS PER MINUTE |
| RS/L | REFRIGERANT SUCTION & LIQUID LINES |
| RTU | ROOFTOP AIR CONDITIONING UNIT |
| SA | SUPPLY AIR |
| SF | SQUARE FEET |
| SP | STATIC PRESSURE |
| SPEC | SPECIFICATION |
| SS | STAINLESS STEEL |
| STD | STANDARD |
| TA | TRANSFER AIR |
| TDH | TOTAL DYNAMIC HEAD |
| TEMP | TEMPERATURE |
| TSP | TOTAL STATIC PRESSURE |
| TYP | TYPICAL |
| UL | UNDERWRITER'S LABORATORY |
| U/G | UNDERGROUND |
| UNO | UNLESS NOTED OTHERWISE |
| V/PH | VOLTS/PHASE |
| VA | U.S. DEPARTMENT OF VETERANS AFFAIRS |
| VAV | VARIABLE AIR VOLUME |
| VFD | VARIABLE FREQUENCY DRIVE |
| VRF | VARIABLE REFRIGERANT FLOW |
| W | WATTS |
| W/ | WITH |
| WB | WET BULB |

# DRAWING SYMBOLS

- 1 / H1 — VIEW NUMBER / SHEET NUMBER
- A / H1 — SECTION LETTER / DRAWING NUMBER WHERE SHOWN
- 1 — REVISION REFERENCE
- 1 — SHEET NOTE CALLOUT
- CONNECT TO EXISTING
- DEMOLISH TO POINT INDICATED
- AHU-1 — EQUIPMENT ABBREVIATION. AN "EX" SHOWN IN FRONT OF EQUIPMENT TAGS NOTIFIES THAT EQUIPMENT IS EXISTING. / TYPICAL UNIT NUMBER; AHU NO. 1
- TU-5 — ITEM (TERMINAL UNIT SHOWN) / TYPICAL UNIT NUMBER; TU NO. 5
- 6" HPS — INTERIOR PIPE SIZE IN INCHES. / SYSTEM TYPE (HPS = HIGH PRESSURE STEAM , HPC = HIGH PRESSURE CONDENSATE, PC = PUMPED CONDENSATE) / TYPICAL PIPE TAG

# BASIC MATERIALS

- EXISTING TO BE REMOVED (HEAVY, DASHED LINE)
- EXISTING TO REMAIN (THIN, HALFTONED, SOLID LINE)
- NEW (HEAVY, SOLID LINE)

# GENERAL NOTES

1. DRAWINGS ARE DIAGRAMMATIC AND INDICATE GENERAL ARRANGEMENT OF SYSTEMS. PROVIDE COMPONENTS INDICATED IN DETAILS, RISER DIAGRAMS, CONTROL DIAGRAMS, AND/OR FLOW DIAGRAMS WHETHER OR NOT INDICATED ON PLANS AND VICE VERSA. WHERE A DISCREPANCY OR CONFLICT IS FOUND BETWEEN ONE DRAWING AND ANOTHER, OR BETWEEN A DRAWING AND APPLICABLE SPECIFICATIONS, NOTIFY THE ARCHITECT/ENGINEER IMMEDIATELY IN WRITTEN FORM. IN GENERAL, THE MOST STRINGENT REQUIREMENT SHALL GOVERN UNLESS THE DISCREPANCY CONFLICTS WITH APPLICABLE CODES OR OWNER'S DESIGN STANDARDS, WHEREIN THE CODE OR OWNER'S DESIGN STANDARDS SHALL GOVERN.
2. CONNECTION TO EQUIPMENT SHALL BE VERIFIED WITH MANUFACTURER'S CERTIFIED DRAWINGS. TRANSITIONS TO ALL EQUIPMENT SHALL BE VERIFIED AND PROVIDED FOR EQUIPMENT FURNISHED.
3. DIMENSIONS SHALL BE FIELD-VERIFIED AND COORDINATED PRIOR TO PROCUREMENT OR FABRICATION. COORDINATE THE WORK WITH OTHER TRADES INVOLVED. FIELD MODIFICATIONS SUCH AS OFFSETS IN PIPING NEEDED DUE TO OBSTRUCTIONS OR INTERFERENCES SHALL BE PROVIDED AT NO ADDITIONAL COST.
4. PROVIDE 1.5R ELBOWS IN PIPING AS INDICATED.
5. ALL EQUIPMENT, PIPING, ETC., SHALL BE SUPPORTED AS DETAILED AND/OR SPECIFIED. PROVIDE ADDITIONAL SUPPORTS AS REQUIRED TO PROVIDE A VIBRATION-FREE, RIGID INSTALLATION.
6. ALL PIPING IS SHOWN SCHEMATICALLY. PROVIDE ALL TRANSITIONS, ELBOWS, FITTINGS, ETC., TO ALLOW SMOOTH FLOWS.
7. COORDINATE SIZE REQUIREMENTS OF ALL CONCRETE PADS UNDER PIPE SUPPORTS.
8. SLEEVE AND SEAL ALL PIPING PENETRATIONS THROUGH BUILDING PARTITIONS. SEE STRUCTURAL DRAWINGS FOR DETAILS AND SPECIFICATIONS.
9. MAINTAIN CLEARANCE OF A MINIMUM OF 6" BETWEEN PIPING.

# APPLICABLE CODES

1. VA HVAC DESIGN MANUAL (HVACDM) 2024
2. VA SEISMIC DESIGN REQUIREMENTS (SDR) 2023 EDITION
3. VA SUSTAINABLE DESIGN MANUAL (SDM) REV. AUGUST 18, 2017
4. AMERICAN SOCIETY OF HEATING, REFRIGERATION AND AIR-CONDITIONING ENGINEERS (ASHRAE):
   - A. SAFETY STANDARD FOR REFRIGERATION SYSTEMS (ASHRAE 15 & 34) 2022 EDITION
   - B. VENTILATION FOR ACCEPTABLE INDOOR AIR QUALITY (ASHRAE 62.1) 2022 EDITION
   - C. ENERGY STANDARD FOR BUILDINGS (ASHRAE 90.1) 2022 EDITION
   - D. VENTILATION OF HEALTH CARE FACILITIES (ASHRAE 170) 2021 EDITION
5. NATIONAL FIRE PROTECTION ASSOCIATION (NFPA)
   - A. COMPRESSED GASES AND CRYOGENIC FLUIDS CODE, NFPA 55 2020 2016 EDITION
   - B. NATIONAL ELECTRICAL CODE (NEC) 2023 EDITION
   - C. NATIONAL FIRE ALARM CODE (NFPA 72) 2022 EDITION
   - D. STANDARD FOR THE INSTALLATION OF AIR-CONDITIONING AND VENTILATING SYSTEMS (NFPA 90A) 2021 EDITION
   - E. STANDARD FOR THE INSTALLATION OF WARM AIR HEATING AND AIR-CONDITIONING SYSTEMS (NFPA 90B) 2021 EDITION
   - F. STANDARD FOR SMOKE CONTROL SYSTEMS (NFPA 92) 2021 EDITION
   - G. STANDARD FOR VENTILATION CONTROL AND FIRE PROTECTION OF COMMERCIAL COOKING (NFPA 96) 2023 EDITION
   - H. HEALTH CARE FACILITIES CODE (NFPA 99) 2021 EDITION
   - I. LIFE SAFETY CODE (NFPA 101) 2021 EDITION
6. APPLICABLE PUBLICATIONS INCLUDING BUT NOT LIMITED TO:
   - A. ARCHITECTURAL BARRIERS ACT ACCESSIBILITY STANDARD (ABAAS)
   - B. AMERICANS WITH DISABILITIES ACT (ADA)
   - C. AIR-CONDITIONING, HEATING, AND REFRIGERATION INSTITUTE (AHRI)
   - D. AIR MOVEMENT AND CONTROL ASSOCIATION (AMCA)
   - E. AMERICAN NATIONAL STANDARDS INSTITUTE (ANSI)
   - F. ASSOCIATION FOR RUBBER PRODUCTS MANUFACTURERS (ARPM)
   - G. AMERICAN SOCIETY OF TESTING AND MATERIALS (ASTM)
   - H. MANUFACTURERS STANDARDIZATION SOCIETY OF THE VALVE AND FITTINGS INDUSTRY, INC. (MSS)
   - I. OCCUPATIONAL SAFETY AND HEALTH ACT (OSHA)
   - J. SHEET METAL AND AIR CONDITIONING CONTRACTORS' NATIONAL ASSOCIATION (SMACNA)
7. APPLICABLE STANDARDS, REGULATIONS, AND PRACTICES OF THE OWNER

# SHEET LIST

| SHEET NUMBER | SHEET NAME |
|---|---|
| M-001 | MECHANICAL NOTES, LEGENDS, & SYMBOLS |
| M-101 | MECHANICAL - PHASING |
| MD103 | SITE PLAN - MECHANICAL - DEMOLITION - PHASE 3 |
| MD104 | SITE PLAN - MECHANICAL - DEMOLITION - PHASE 4 |
| MD106 | SITE PLAN - MECHANICAL - DEMOLITION - PHASE 6 |
| MP101 | SITE PLAN - MECHANICAL - NEW WORK - PHASE 1 |
| MP102 | SITE PLAN - MECHANICAL - NEW WORK - PHASE 2 |
| MP103 | SITE PLAN - MECHANICAL - NEW WORK - PHASE 3 |
| MP104 | SITE PLAN - MECHANICAL - NEW WORK - PHASE 4 |
| MP105 | SITE PLAN - MECHANICAL - NEW WORK - PHASE 5 |
| MP106 | SITE PLAN - MECHANICAL - NEW WORK - PHASE 6 |
| MP107 | SITE PLAN - MECHANICAL - NEW WORK - PHASE 7 |
| MD401 | MH-10B - MECH PLANS AND SECTIONS - DEMOLITION - PHASE 3 |
| MD402 | MH-16A - MECH PLANS AND SECTIONS - DEMOLITION - PHASE 3 |
| MD403 | MH-17B - MECH PLANS AND SECTIONS - DEMOLITION - PHASE 3 |
| MD404 | MH-1 - MECH PLANS AND SECTIONS - DEMOLITION - PHASE 4 |
| MD405 | MH-10A - MECH PLANS AND SECTIONS - DEMOLITION - PHASE 6 |
| MD406 | MH-C - MECH PLANS AND SECTIONS - DEMOLITION - PHASE 6 |
| MD407 | MH-10B - MECH PLANS AND SECTIONS - DEMOLITION - PHASE 6 |
| MD408 | MH-16A - MECH PLANS AND SECTIONS - DEMOLITION - PHASE 6 |
| MD409 | MH-17B - MECH PLANS AND SECTIONS - DEMOLITION - PHASE 6 |
| MP401 | MH-10B - MECH PLANS AND SECTIONS - NEW WORK - PHASE 3 |
| MP402 | MH-16A - MECH PLANS AND SECTIONS - NEW WORK - PHASE 3 |
| MP403 | MH-17B - MECH PLANS AND SECTIONS - NEW WORK - PHASE 3 |
| MP404 | MH-16A - MECH PLANS AND SECTIONS - NEW WORK - PHASE 4 |
| MP405 | MH-17B - MECH PLANS AND SECTIONS - NEW WORK - PHASE 4 |
| MP406 | MH-15A - MECH PLANS AND SECTIONS - NEW WORK - PHASE 5 |
| MP407 | MH-17C- MECH PLANS AND SECTIONS - NEW WORK - PHASE 5 |
| MP408 | MH-15B - MECH PLANS AND SECTIONS - NEW WORK - PHASE 6 |
| MP409 | B16 - MECH PLANS AND PHOTOS |
| MP410 | B17 - MECH PLANS AND PHOTOS |
| M-501 | MECHANICAL DETAILS |
| M-502 | MECHANICAL EXISTING CONDITIONS DETAILS |
| M-801 | MECHANICAL SCHEDULES |

NOTE: SOME SYMBOLS AND ABBREVIATIONS SHOWN MAY NOT PERTAIN TO THIS PROJECT

| Revisions | Date |
|---|---|

CONSULTANT

ARCHITECT/ENGINEER OF RECORD

2014-2024 10TH ANNIVERSARY
Above Group
ENGINEERING | DESIGN | CONSULTING
SDVOSB
www.abovegroupinc.com
COA/CA Lic. No. 31120
305 East Dr., Suite H,
Melbourne, Florida 32904
PH: 321.345.9026

STAMP

STATE OF MARYLAND — GEOFFREY S. CHENOWETH — No. 28825 — REGISTERED PROFESSIONAL ENGINEER

Office of Construction and Facilities Management

VA U.S. Department of Veterans Affairs

| | | | |
|---|---|---|---|
| Drawing Title: MECHANICAL NOTES, LEGENDS, & SYMBOLS | Phase: 100% CONSTRUCTION DOCUMENTS | Project Title: STEAM LINE REPLACEMENT | Project Number: 659-24-903 |
| | | | Building Number: |
| Approved: | | Location: SALISBURY VAMC | Drawing Number: M-001 |
| | | Issue Date: 09/27/2024 · Checked: GC · Drawn: DG | |

VA FORM 08 - 6231

Autodesk Docs://9123056 - Salisbury Steam Line Replacement/9123056 - VA Salisbury Stm Line Rplc - R23_ME.rvt
9/27/2024 11:10:11 AM

| PHASE | PHASE DESCRIPTION | BUILDINGS | | | | | MANHOLES | | | | | | | | | SHUTDOWN SERVICES | | PHASING NOTES |
|---|---|---|---|---|---|---|---|---|---|---|---|---|---|---|---|---|---|---|
| | | 18 | 17 | 16 | 15 | 10 | 17C | 17B (OLD A) | 16A (OLD B) | 15B | 15A | 10B (OLD D) | 10A | 1 | C | STEAM | CONDENSATE | |
| 1 | **UTILITY LOCATION AND ULTRASONIC TESTING.** | | | | | | | | | | | | | | | | | |
| | LOCATE ROUTING OF ALL ACTIVE STEAM, PUMPED CONDENSATE, AND HIGH PRESSURE CONDENSATE LINES. LOCATE ALL EXISTING ANCHORS. CONTRACTOR TO EVALUATE EXISTING CONDITIONS AND IDENTIFY IF ANY CONFLICTS WILL OCCUR IN FUTURE PHASES. PERFORM ULTRASONIC TESTING AT ALL CONNECTION POINTS IN MANHOLES 17B, 16A, AND 10B. SEE SPECIFICATION 0123056 FOR TESTING REQUIREMENTS. | - | X | X | - | - | - | X | X | - | - | X | X | X | X | NR | NR | 1) NO DEMOLITION WORK IS OCCURING IN PHASE 1<br>2) WORK SHALL BE PERFORMED ON, AND AROUND ACTIVE STEAM AND CONDENSATE PIPING. ABATEMENT OF HAZARDOUS MATERIALS TO GAIN ACCESS TO THE PIPING MAY BE REQUIRED. |
| 2 | **TEMPORARY STEAM PIPING TO BUILDINGS 16 AND 17** | | | | | | | | | | | | | | | | | |
| | INSTALL TEMPORARY STEAM PIPING FROM EX MH-16A AND EX MH-17B TO BUILDINGS 16 AND 17. RESPECTIVELY. THIS PIPING WILL BE ROUTED ABOVE GROUND AND WILL BE CONNECTED THROUGH THE TOP OF THE MANHOLES. ALL EXPOSED PIPING WILL BE ENCLOSED TO MEET ALL PSROM REQUIREMENTS. INSTALL TEMPORARY CONDENSATE PIPING TO AVOID FUTURE SCOPE OF WORK. ROUTE TEMPORARY PIPING TO BUILDING 16 AND BUILDING 17. TEMPORARY PIPING TO BE CAPPED FOR CONNECTION TO ACTIVE STEAM AND CONDENSATE PIPING IN PHASE 3 | - | X | X | - | - | - | X | X | - | - | - | - | - | - | NR | NR | 1) NO DEMOLITION WORK IS OCCURING IN PHASE 2 |
| 3 | **INSTALLATION OF NEW STEAM HEADERS IN MANHOLES MH-17B, MH-16A, AND MH-10B** | | | | | | | | | | | | | | | | | |
| | INSTALL STEAM HEADERS AND PHASING VALVES IN MANHOLES MH-17B, MH-16A, AND MH-10B. MAKE CONNECTIONS FOR TEMPORARY STEAM AND CONDENSATE PIPING IN MH-17B, MH-16A, BUILDING 17, AND BUILDING 16. ADJUST PHASING VALVES TO REDIRECT STEAM AND CONDENSATE THROUGH TEMPORARY PIPING. | - | X | X | - | - | - | X | X | - | - | - | - | - | - | X | X | 1) PHASING ISOLATION VALVES FOR EXISTING MAIN STEAM PIPING SHALL REMAIN OPEN. ISOLATION VALVES FOR FUTURE CONNECTIONS SHALL BE CLOSED UNTIL COMPLETION OF PHASE 5.<br>2) TEMPORARY CONNECTIONS WILL BE INSTALLED TO FACILITATE MODIFICATION OF MH-17B AND MH-16A AND REPLACEMENT OF PIPING TO BUILDINGS 16 AND 17. |
| 4 | **CONSTRUCTION OF ENLARGED MANHOLES MH-17B AND MH-16A** | | | | | | | | | | | | | | | | | |
| | DEMOLISH EXISTING MANHOLES MH-17B AND MH-16A AROUND EXISTING ACTIVE STEAM PIPING. CONSTRUCT NEW ENLARGED MANHOLES MH-17B AND MH-16A AROUND EXISTING ACTIVE STEAM PIPING. REMOVE ABANDONED STEAM AND CONDENSATE PIPING ALONG ROAD FOR INSTALLATION OF NEW STEAM AND CONDENSATE PIPING. REMOVE ALL ASSOCIATED ANCHORS AND SUPPORTS. REMOVE EXISTING MANHOLE 17C. INSTALL STEAM AND CONDENSATE PIPING FROM NEW ENLARGED MH-17B TO MH-16A. ROUTE NEW STEAM AND CONDENSATE PIPING FROM MH-17B AND MH-16A TO CORRESNDING BUILDING 17 AND BUILDING 16. ROUTE CONDENSATE PIPING FROM MH-17B NEAR ACTIVE CONDENSATE PIPING FOR CONNECTION IN PHASE 6. | - | X | X | - | - | X | X | X | - | - | - | - | X | - | NR | NR | |
| 5 | **INSTALLATION OF NEW STEAM AND CONDENSATE PIPING FROM MH-16A TO MH-10B AND MH-10A RESPECTIVELY. INSTALLATION OF NEW MH-17C AND MH-15A.** | | | | | | | | | | | | | | | | | |
| | INSTALL NEW STEAM AND CONDENSATE PIPING FROM MH-16A TO MH-10B. CONSTRUCT NEW MANHOLES MH-17C AND MH-15A. CONDENSATE PIPING TO TERMINATE OUTSIDE MH-10A FOR CONNECTION IN PHASE 6. ADJUST PHASING VALVES TO ACTIVATE NEW STEAM PIPING. | - | - | - | - | - | - | - | - | - | X | X | - | - | - | NR | NR | 1) TRAFFIC CONTROL WILL BE REQUIRED TO PROVIDE PROTECTIVE EDGE ALONG DRIVE FOR SAFE WORK.<br>2) NEW CONDENSATE PIPING TO BE INSTALLED FROM MH-16A (OLD MH-B) TO JUST OUTSIDE MH-10A FOR CONNECTION IN PHASE 6.<br>3) DEMOLITION AND RECONNECTION OF STEAM PIPING IN MH-17B AND MH-16A SHALL BE COORDINATED FOR MINIMAL STEAM SHUTDOWN TO MAIN CAMPUS. ISOLATION VALVES FOR FUTURE CONNECTIONS SHALL BE CLOSED. ISOLATION VALVES FOR EXISTING MAIN STEAM PIPING SHALL REMAIN OPEN. |
| 6 | **INSTALLATION OF MH-15B. FINAL CONDENSATE CONNECTIONS AT MH-15B AND MH-17B** | | | | | | | | | | | | | | | | | |
| | DEMOLISH EXISTING MANHOLE 10A AROUND EXISTING PIPING. CONSTRUCT NEW MANHOLE MH-15B AROUND EXISTING PIPING. MAKE FINAL CONNECTIONS FOR CONDENSATE AT MH-15B AND MH-17B. ACTIVATE NEW CONDENSATE PIPING. | - | - | - | - | - | - | X | X | X | - | - | X | - | X | NR | X | 1) ISOLATION AND ABANDON STEAM AND CONDENSATE TO BUILDING 15. REMOVE ALL PIPING ACCESSIBLE, ABANDON THE REST |
| 7 | **SITE FINISHING, CX, AND FINAL TURNOVER** | | | | | | | | | | | | | | | | | |
| | PERFORM FINAL COMMISSIONING OF SYSTEM. PREPARE SITE FINISHING, RESEEDING AND REPAVING. HAND OVER SYSTEM TO THE COR FOR USE. | X | X | X | X | X | - | X | X | X | X | X | X | - | - | NR | NR | 1) FINAL GRADING AND SEED/SOD<br>2) FINAL PAVING, LINES, SIGNAGE, AND PERMANENT TRAFFIC CONTROL RESTORATION.<br>3) FINAL LABELING OF PIPING AND MANHOLES.<br>4) COMMISSIONING<br>5) TRAINING AND TURNOVER |

## DEDUCTIVE ALTERNATE BID ITEMS TABLE

| ALTERNATE BID ITEM | ASSOCIATED PHASE | ASSOCIATED SHEET | DESCRIPTION |
|---|---|---|---|
| BASE BID | 1-7 | M-101 | INCLUDE ALL WORK OUTLINED IN BID DOCUMENTS |
| 1 | 3 / 4 / 5 | MP401 MP404 MP405 MP406 MP407 MP408 | INCLUDE ALL SCOPE OF WORK IN BASE BID WITH THE EXCEPTION OF PROVIDING WATER MONITORING SYSTEM WITH LEAK/LEVEL GAUGE ABOVE GRADE IN MANHOLES MH-10B, MH-16A, MH-17B, MH-15A, MH-17C, AND MH-15B. |
| 2 | 6 | MD406 | INCLUDE ALL WORK IN BASE BID WITH THE EXCEPTION OF THE WORK OUTLINED IN ALTERNATE BID ITEM 1 AND THE REMOVAL OF MANHOLE MH-C. MH-C TO BE ABANDONED IN PLACE. |
| 3 | 4 / 6 | MD104 MD406 | INCLUDE ALL WORK IN BASE BID WITH THE EXCEPTION OF THE WORK OUTLINED IN ALTERNATE BID ITEM 1 AND 2 AND THE REMOVAL OF THE EXISTING STEAM/CONDENSATE PIPING OUTLINED IN PHASE 4 AND PHASE 6. SEE ASSICIATED DRAWINGS FOR DETAILED |

NOTES:
1. THE CONTRACTOR SHALL FULLY COORDINATE THE INTEGRATION OF THE PHASED BID ITEMS WITH THE ADD ALTERNATE WORK TO ENSURE ALL NEEDED WORK IS BEING PERFORMED AND SCHEDULED TO MAINTAIN FUNCTIONALITY AND MINIMIZE DOWNTIME

Revisions | Date

CONSULTANT

ARCHITECT/ENGINEER OF RECORD

2014-2024 10TH ANNIVERSARY
Above Group
ENGINEERING | DESIGN | CONSULTING
www.abovegroupinc.com
COA/CA Lic. No. 31120
305 East Dr., Suite H,
Melbourne, Florida 32904
PH: 321.345.9026

STAMP

STATE OF MARYLAND
GEOFFREY S. CHENOWETH
No. 28825
REGISTERED
PROFESSIONAL ENGINEER

Office of Construction and Facilities Management

VA U.S. Department of Veterans Affairs

Drawing Title: MECHANICAL - PHASING

Phase: 100% CONSTRUCTION DOCUMENTS

Project Title: STEAM LINE REPLACEMENT

Project Number: 659-24-903

Building Number:

Approved:

Location: SALISBURY VAMC

Issue Date: 09/27/2024

Checked: GC

Drawn: DG

Drawing Number: M-101

Autodesk Docs://0123056 - Salisbury Steam Line Replacement/0123056 - VA Salisbury Stim Line Repl - R23_ME.rvt

9/27/2024 11:10:13 AM

VA FORM 08 - 6231

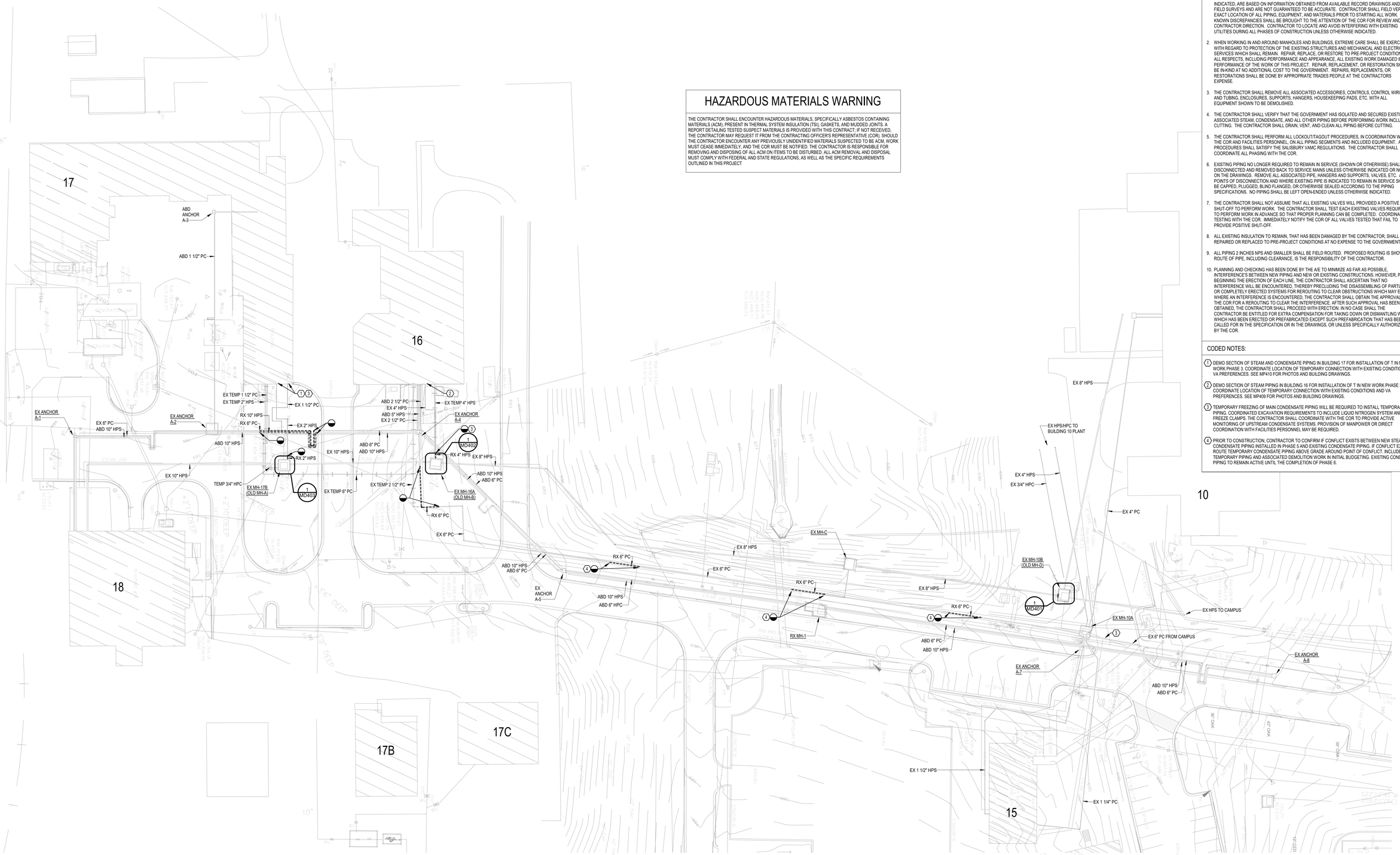


1 SITE PLAN - MECHANICAL - DEMOLITION - PHASE 3
1" = 30'-0"

N 0 15' 30' 60' 90'
1" = 30'

## HAZARDOUS MATERIALS WARNING

THE CONTRACTOR SHALL ENCOUNTER HAZARDOUS MATERIALS, SPECIFICALLY ASBESTOS CONTAINING MATERIALS (ACM), PRESENT IN THERMAL SYSTEM INSULATION (TSI), GASKETS, AND MUDDED JOINTS. A REPORT DETAILING TESTED SUSPECT MATERIALS IS PROVIDED WITH THIS CONTRACT, IF NOT RECEIVED, THE CONTRACTOR MAY REQUEST IT FROM THE CONTRACTING OFFICER'S REPRESENTATIVE (COR). SHOULD THE CONTRACTOR ENCOUNTER ANY PREVIOUSLY UNIDENTIFIED MATERIALS SUSPECTED TO BE ACM, WORK MUST CEASE IMMEDIATELY, AND THE COR MUST BE NOTIFIED. THE CONTRACTOR IS RESPONSIBLE FOR REMOVING AND DISPOSING OF ALL ACM ON ITEMS TO BE DISTURBED. ALL ACM REMOVAL AND DISPOSAL MUST COMPLY WITH FEDERAL AND STATE REGULATIONS, AS WELL AS THE SPECIFIC REQUIREMENTS OUTLINED IN THIS PROJECT

## DRAWING NOTES:

1. EXISTING CONDITIONS - I.E. PRESENCE, SIZE, AND LOCATION OF PIPING, EQUIPMENT, AND MATERIALS INDICATED, ARE BASED ON INFORMATION OBTAINED FROM AVAILABLE RECORD DRAWINGS AND FIELD SURVEYS AND ARE NOT GUARANTEED TO BE ACCURATE. CONTRACTOR SHALL FIELD VERIFY EXACT LOCATION OF ALL PIPING, EQUIPMENT, AND MATERIALS PRIOR TO STARTING ALL WORK. ANY KNOWN DISCREPANCIES SHALL BE BROUGHT TO THE ATTENTION OF THE COR FOR REVIEW AND CONTRACTOR DIRECTION. CONTRACTOR TO LOCATE AND AVOID INTERFERING WITH EXISTING UTILITIES DURING ALL PHASES OF CONSTRUCTION UNLESS OTHERWISE INDICATED.
2. WHEN WORKING IN AND AROUND MANHOLES AND BUILDINGS, EXTREME CARE SHALL BE EXERCISED WITH REGARD TO PROTECTION OF THE EXISTING STRUCTURES AND MECHANICAL AND ELECTRICAL SERVICES WHICH SHALL REMAIN. REPAIR, REPLACE, OR RESTORE TO PRE-PROJECT CONDITIONS IN ALL RESPECTS, INCLUDING PERFORMANCE AND APPEARANCE. ALL EXISTING WORK DAMAGED IN THE PERFORMANCE OF THE WORK OF THIS PROJECT. REPAIR, REPLACEMENT, OR RESTORATION SHALL BE IN-KIND AT NO ADDITIONAL COST TO THE GOVERNMENT. REPAIRS, REPLACEMENTS, OR RESTORATIONS SHALL BE DONE BY APPROPRIATE TRADES PEOPLE AT THE CONTRACTORS EXPENSE.
3. THE CONTRACTOR SHALL REMOVE ALL ASSOCIATED ACCESSORIES, CONTROLS, CONTROL WIRING AND TUBING, ENCLOSURES, SUPPORTS, HANGERS, HOUSEKEEPING PADS, ETC. WITH ALL EQUIPMENT SHOWN TO BE DEMOLISHED.
4. THE CONTRACTOR SHALL VERIFY THAT THE GOVERNMENT HAS ISOLATED AND SECURED EXISTING ASSOCIATED STEAM, CONDENSATE, AND ALL OTHER PIPING BEFORE PERFORMING WORK INCLUDING CUTTING. THE CONTRACTOR SHALL DRAIN, VENT, AND CLEAN ALL PIPING BEFORE CUTTING.
5. THE CONTRACTOR SHALL PERFORM ALL LOCKOUT/TAGOUT PROCEDURES, IN COORDINATION WITH THE COR AND FACILITIES PERSONNEL, ON ALL PIPING SEGMENTS AND INCLUDED EQUIPMENT. ALL PROCEDURES SHALL SATISFY THE SALISBURY VAMC REGULATIONS. THE CONTRACTOR SHALL COORDINATE ALL PHASING WITH THE COR.
6. EXISTING PIPING NO LONGER REQUIRED TO REMAIN IN SERVICE (SHOWN OR OTHERWISE) SHALL BE DISCONNECTED AND REMOVED BACK TO SERVICE MAINS UNLESS OTHERWISE INDICATED OR NOTED ON THE DRAWINGS. REMOVE ALL ASSOCIATED PIPE, HANGERS AND SUPPORTS, VALVES, ETC. ALL POINTS OF DISCONNECTION AND WHERE EXISTING PIPE IS INDICATED TO REMAIN IN SERVICE SHALL BE CAPPED, PLUGGED, BLIND FLANGED, OR OTHERWISE SEALED ACCORDING TO THE PIPING SPECIFICATIONS. NO PIPING SHALL BE LEFT OPEN-ENDED UNLESS OTHERWISE INDICATED.
7. THE CONTRACTOR SHALL NOT ASSUME THAT ALL EXISTING VALVES WILL PROVIDED A POSITIVE SHUT-OFF TO PERFORM WORK. THE CONTRACTOR SHALL TEST EACH EXISTING VALVES REQUIRED TO PERFORM WORK IN ADVANCE SO THAT PROPER PLANNING CAN BE COMPLETED. COORDINATE TESTING WITH THE COR. IMMEDIATELY NOTIFY THE COR OF ALL VALVES TESTED THAT FAIL TO PROVIDE POSITIVE SHUT-OFF.
8. ALL EXISTING INSULATION TO REMAIN, THAT HAS BEEN DAMAGED BY THE CONTRACTOR, SHALL BE REPAIRED OR REPLACED TO PRE-PROJECT CONDITIONS AT NO EXPENSE TO THE GOVERNMENT.
9. ALL PIPING 2 INCHES NPS AND SMALLER SHALL BE FIELD ROUTED. PROPOSED ROUTING IS SHOWN. ROUTE OF PIPE, INCLUDING CLEARANCE, IS THE RESPONSIBILITY OF THE CONTRACTOR.
10. PLANNING AND CHECKING HAS BEEN DONE BY THE A/E TO MINIMIZE AS FAR AS POSSIBLE, INTERFERENCE'S BETWEEN NEW PIPING AND NEW OR EXISTING CONSTRUCTIONS. HOWEVER, PRIOR BEGINNING THE ERECTION OF EACH LINE, THE CONTRACTOR SHALL ASCERTAIN THAT NO INTERFERENCE WILL BE ENCOUNTERED, THEREBY PRECLUDING THE DISASSEMBLING OF PARTIALLY OR COMPLETELY ERECTED SYSTEMS FOR REROUTING TO CLEAR OBSTRUCTIONS WHICH MAY EXIST. WHERE AN INTERFERENCE IS ENCOUNTERED, THE CONTRACTOR SHALL OBTAIN THE APPROVAL OF THE COR FOR A REROUTING TO CLEAR THE INTERFERENCE. AFTER SUCH APPROVAL HAS BEEN OBTAINED, THE CONTRACTOR SHALL PROCEED WITH ERECTION. IN NO CASE SHALL THE CONTRACTOR BE ENTITLED FOR EXTRA COMPENSATION FOR TAKING DOWN OR DISMANTLING WORK WHICH HAS BEEN ERECTED OR PREFABRICATED EXCEPT SUCH PREFABRICATION THAT HAS BEEN CALLED FOR IN THE SPECIFICATION OR IN THE DRAWINGS, OR UNLESS SPECIFICALLY AUTHORIZED BY THE COR.

## CODED NOTES:

1. DEMO SECTION OF STEAM AND CONDENSATE PIPING IN BUILDING 17 FOR INSTALLATION OF T IN NEW WORK PHASE 3. COORDINATE LOCATION OF TEMPORARY CONNECTION WITH EXISTING CONDITIONS AND VA PREFERENCES. SEE MP410 FOR PHOTOS AND BUILDING DRAWINGS.
2. DEMO SECTION OF STEAM PIPING IN BUILDING 16 FOR INSTALLATION OF T IN NEW WORK PHASE 3. COORDINATE LOCATION OF TEMPORARY CONNECTION WITH EXISTING CONDITIONS AND VA PREFERENCES. SEE MP409 FOR PHOTOS AND BUILDING DRAWINGS.
3. TEMPORARY FREEZING OF MAIN CONDENSATE PIPING WILL BE REQUIRED TO INSTALL TEMPORARY PIPING. COORDINATED EXCAVATION REQUIREMENTS TO INCLUDE LIQUID NITROGEN SYSTEM AND FREEZE CLAMPS. THE CONTRACTOR SHALL COORDINATE WITH THE COR TO PROVIDE ACTIVE MONITORING OF UPSTREAM CONDENSATE SYSTEMS. PROVISION OF MANPOWER OR DIRECT COORDINATION WITH FACILITIES PERSONNEL MAY BE REQUIRED.
4. PRIOR TO CONSTRUCTION, CONTRACTOR TO CONFIRM IF CONFLICT EXISTS BETWEEN NEW STEAM AND CONDENSATE PIPING INSTALLED IN PHASE 5 AND EXISTING CONDENSATE PIPING. IF CONFLICT EXISTS, ROUTE TEMPORARY CONDENSATE PIPING ABOVE GRADE AROUND POINT OF CONFLICT. INCLUDE TEMPORARY PIPING AND ASSOCIATED DEMOLITION WORK IN INITIAL BUDGETING. EXISTING CONDENSATE PIPING TO REMAIN ACTIVE UNTIL THE COMPLETION OF PHASE 6.

| Revisions | Date |
|---|---|
| | |

CONSULTANT

ARCHITECT/ENGINEER OF RECORD

2014-2024 10TH ANNIVERSARY Above Group ENGINEERING | DESIGN | CONSULTING
SDVOSB
www.abovegroupinc.com
COA/CA Lic. No. 31120
305 East Dr., Suite H, Melbourne, Florida 32904
PH: 321.345.9026

STAMP

STATE OF MARYLAND GEOFFREY S. CHEADOR No. 28825 REGISTERED PROFESSIONAL ENGINEER

Office of Construction and Facilities Management

VA U.S. Department of Veterans Affairs

| | | | |
|---|---|---|---|
| Drawing Title: SITE PLAN - MECHANICAL - DEMOLITION - PHASE 3 | Phase: 100% CONSTRUCTION DOCUMENTS | Project Title: STEAM LINE REPLACEMENT | Project Number: 659-24-903 |
| | | | Building Number: |
| Approved: | | Location: SALISBURY VAMC | Drawing Number: MD103 |
| | | Issue Date: 09/27/2024 · Checked: GC · Drawn: DG | |

VA FORM 08 - 6231

Autodesk Docs://0123056 - Salisbury Steam Line Replacement/0123056 - VA Salisbury Stm Line Repl - R23_ME.rvt
9/27/2024 11:10:16 AM

## HAZARDOUS MATERIALS WARNING

THE CONTRACTOR SHALL ENCOUNTER HAZARDOUS MATERIALS, SPECIFICALLY ASBESTOS CONTAINING MATERIALS (ACM), PRESENT IN THERMAL SYSTEM INSULATION (TSI), GASKETS, AND MUDDED JOINTS. A REPORT DETAILING TESTED SUSPECT MATERIALS IS PROVIDED WITH THIS CONTRACT, IF NOT RECEIVED, THE CONTRACTOR MAY REQUEST IT FROM THE CONTRACTING OFFICER'S REPRESENTATIVE (COR). SHOULD THE CONTRACTOR ENCOUNTER ANY PREVIOUSLY UNIDENTIFIED MATERIALS SUSPECTED TO BE ACM, WORK MUST CEASE IMMEDIATELY, AND THE COR MUST BE NOTIFIED. THE CONTRACTOR IS RESPONSIBLE FOR REMOVING AND DISPOSING OF ALL ACM ON ITEMS TO BE DISTURBED. ALL ACM REMOVAL AND DISPOSAL MUST COMPLY WITH FEDERAL AND STATE REGULATIONS, AS WELL AS THE SPECIFIC REQUIREMENTS OUTLINED IN THIS PROJECT

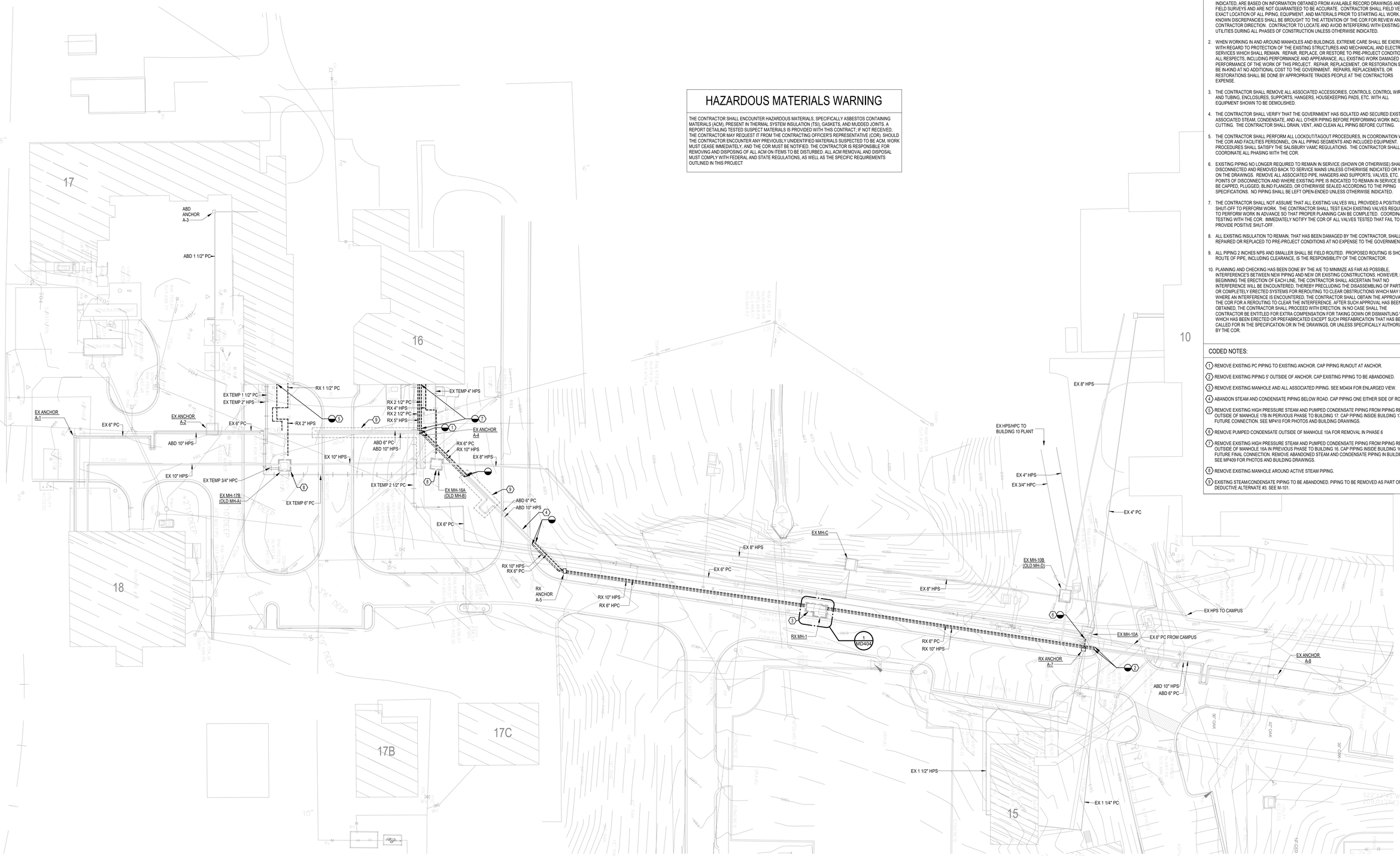


1 SITE PLAN - MECHANICAL - DEMOLITION - PHASE 4
1" = 30'-0"

## DRAWING NOTES:

1. EXISTING CONDITIONS - I.E. PRESENCE, SIZE, AND LOCATION OF PIPING, EQUIPMENT, AND MATERIALS INDICATED, ARE BASED ON INFORMATION OBTAINED FROM AVAILABLE RECORD DRAWINGS AND FIELD SURVEYS AND ARE NOT GUARANTEED TO BE ACCURATE. CONTRACTOR SHALL FIELD VERIFY EXACT LOCATION OF ALL PIPING, EQUIPMENT, AND MATERIALS PRIOR TO STARTING ALL WORK. ANY KNOWN DISCREPANCIES SHALL BE BROUGHT TO THE ATTENTION OF THE COR FOR REVIEW AND CONTRACTOR DIRECTION. CONTRACTOR TO LOCATE AND AVOID INTERFERING WITH EXISTING UTILITIES DURING ALL PHASES OF CONSTRUCTION UNLESS OTHERWISE INDICATED.
2. WHEN WORKING IN AND AROUND MANHOLES AND BUILDINGS, EXTREME CARE SHALL BE EXERCISED WITH REGARD TO PROTECTION OF THE EXISTING STRUCTURES AND MECHANICAL AND ELECTRICAL SERVICES WHICH SHALL REMAIN. REPAIR, REPLACE, OR RESTORE TO PRE-PROJECT CONDITIONS IN ALL RESPECTS, INCLUDING PERFORMANCE AND APPEARANCE. ALL EXISTING WORK DAMAGED IN THE PERFORMANCE OF THE WORK OF THIS PROJECT. REPAIR, REPLACEMENT, OR RESTORATION SHALL BE IN-KIND AT NO ADDITIONAL COST TO THE GOVERNMENT. REPAIRS, REPLACEMENTS, OR RESTORATIONS SHALL BE DONE BY APPROPRIATE TRADES PEOPLE AT THE CONTRACTORS EXPENSE.
3. THE CONTRACTOR SHALL REMOVE ALL ASSOCIATED ACCESSORIES, CONTROLS, CONTROL WIRING AND TUBING, ENCLOSURES, SUPPORTS, HANGERS, HOUSEKEEPING PADS, ETC. WITH ALL EQUIPMENT SHOWN TO BE DEMOLISHED.
4. THE CONTRACTOR SHALL VERIFY THAT THE GOVERNMENT HAS ISOLATED AND SECURED EXISTING ASSOCIATED STEAM, CONDENSATE, AND ALL OTHER PIPING BEFORE PERFORMING WORK INCLUDING CUTTING. THE CONTRACTOR SHALL DRAIN, VENT, AND CLEAN ALL PIPING BEFORE CUTTING.
5. THE CONTRACTOR SHALL PERFORM ALL LOCKOUT/TAGOUT PROCEDURES, IN COORDINATION WITH THE COR AND FACILITIES PERSONNEL, ON ALL PIPING SEGMENTS AND INCLUDED EQUIPMENT. ALL PROCEDURES SHALL SATISFY THE SALISBURY VAMC REGULATIONS. THE CONTRACTOR SHALL COORDINATE ALL PHASING WITH THE COR.
6. EXISTING PIPING NO LONGER REQUIRED TO REMAIN IN SERVICE (SHOWN OR OTHERWISE) SHALL BE DISCONNECTED AND REMOVED BACK TO SERVICE MAINS UNLESS OTHERWISE INDICATED OR NOTED ON THE DRAWINGS. REMOVE ALL ASSOCIATED PIPE, HANGERS AND SUPPORTS, VALVES, ETC. ALL POINTS OF DISCONNECTION AND WHERE EXISTING PIPE IS INDICATED TO REMAIN IN SERVICE SHALL BE CAPPED, PLUGGED, BLIND FLANGED, OR OTHERWISE SEALED ACCORDING TO THE PIPING SPECIFICATIONS. NO PIPING SHALL BE LEFT OPEN-ENDED UNLESS OTHERWISE INDICATED.
7. THE CONTRACTOR SHALL NOT ASSUME THAT ALL EXISTING VALVES WILL PROVIDED A POSITIVE SHUT-OFF TO PERFORM WORK. THE CONTRACTOR SHALL TEST EACH EXISTING VALVES REQUIRED TO PERFORM WORK IN ADVANCE SO THAT PROPER PLANNING CAN BE COMPLETED. COORDINATE TESTING WITH THE COR. IMMEDIATELY NOTIFY THE COR OF ALL VALVES TESTED THAT FAIL TO PROVIDE POSITIVE SHUT-OFF.
8. ALL EXISTING INSULATION TO REMAIN, THAT HAS BEEN DAMAGED BY THE CONTRACTOR, SHALL BE REPAIRED OR REPLACED TO PRE-PROJECT CONDITIONS AT NO EXPENSE TO THE GOVERNMENT.
9. ALL PIPING 2 INCHES NPS AND SMALLER SHALL BE FIELD ROUTED. PROPOSED ROUTING IS SHOWN. ROUTE OF PIPE, INCLUDING CLEARANCE, IS THE RESPONSIBILITY OF THE CONTRACTOR.
10. PLANNING AND CHECKING HAS BEEN DONE BY THE A/E TO MINIMIZE AS FAR AS POSSIBLE, INTERFERENCE'S BETWEEN NEW PIPING AND NEW OR EXISTING CONSTRUCTIONS. HOWEVER, PRIOR BEGINNING THE ERECTION OF EACH LINE, THE CONTRACTOR SHALL ASCERTAIN THAT NO INTERFERENCE WILL BE ENCOUNTERED, THEREBY PRECLUDING THE DISASSEMBLING OF PARTIALLY OR COMPLETELY ERECTED SYSTEMS FOR REROUTING TO CLEAR OBSTRUCTIONS WHICH MAY EXIST. WHERE AN INTERFERENCE IS ENCOUNTERED, THE CONTRACTOR SHALL OBTAIN THE APPROVAL OF THE COR FOR A REROUTING TO CLEAR THE INTERFERENCE. AFTER SUCH APPROVAL HAS BEEN OBTAINED, THE CONTRACTOR SHALL PROCEED WITH ERECTION. IN NO CASE SHALL THE CONTRACTOR BE ENTITLED FOR EXTRA COMPENSATION FOR TAKING DOWN OR DISMANTLING WORK WHICH HAS BEEN ERECTED OR PREFABRICATED EXCEPT SUCH PREFABRICATION THAT HAS BEEN CALLED FOR IN THE SPECIFICATION OR IN THE DRAWINGS, OR UNLESS SPECIFICALLY AUTHORIZED BY THE COR.

## CODED NOTES:

1. REMOVE EXISTING PC PIPING TO EXISTING ANCHOR. CAP PIPING RUNOUT AT ANCHOR.
2. REMOVE EXISTING PIPING 5' OUTSIDE OF ANCHOR. CAP EXISTING PIPING TO BE ABANDONED.
3. REMOVE EXISTING MANHOLE AND ALL ASSOCIATED PIPING. SEE MD404 FOR ENLARGED VIEW.
4. ABANDON STEAM AND CONDENSATE PIPING BELOW ROAD. CAP PIPING ONE EITHER SIDE OF ROAD.
5. REMOVE EXISTING HIGH PRESSURE STEAM AND PUMPED CONDENSATE PIPING FROM PIPING REMOVED OUTSIDE OF MANHOLE 17B IN PERVIOUS PHASE TO BUILDING 17. CAP PIPING INSIDE BUILDING 17 FOR FUTURE CONNECTION. SEE MP410 FOR PHOTOS AND BUILDING DRAWINGS.
6. REMOVE PUMPED CONDENSATE OUTSIDE OF MANHOLE 10A FOR REMOVAL IN PHASE 6
7. REMOVE EXISTING HIGH PRESSURE STEAM AND PUMPED CONDENSATE PIPING FROM PIPING REMOVED OUTSIDE OF MANHOLE 16A IN PREVIOUS PHASE TO BUILDING 16. CAP PIPING INSIDE BUILDING 16 FOR FUTURE FINAL CONNECTION. REMOVE ABANDONED STEAM AND CONDENSATE PIPING IN BUILDING 16. SEE MP409 FOR PHOTOS AND BUILDING DRAWINGS.
8. REMOVE EXISTING MANHOLE AROUND ACTIVE STEAM PIPING.
9. EXISTING STEAM/CONDENSATE PIPING TO BE ABANDONED. PIPING TO BE REMOVED AS PART OF DEDUCTIVE ALTERNATE #3. SEE M-101.

| Revisions | Date |
|---|---|
| | |

CONSULTANT

ARCHITECT/ENGINEER OF RECORD

2014-2024 10TH ANNIVERSARY
Above Group
ENGINEERING | DESIGN | CONSULTING
SDVOSB
www.abovegroupinc.com
COA/CA Lic. No. 31120
305 East Dr., Suite H,
Melbourne, Florida 32904
PH: 321.345.9026

STAMP

STATE OF MARYLAND
GEOFFREY S. GNEWKOW
No. 39853
REGISTERED PROFESSIONAL ENGINEER

Office of Construction and Facilities Management

VA U.S. Department of Veterans Affairs

| | |
|---|---|
| Drawing Title | SITE PLAN - MECHANICAL - DEMOLITION - PHASE 4 |
| Phase | 100% CONSTRUCTION DOCUMENTS |
| Project Title | STEAM LINE REPLACEMENT |
| Project Number | 659-24-903 |
| Building Number | |
| Approved: | |
| Location | SALISBURY VAMC |
| Issue Date | 09/27/2024 |
| Checked | GC |
| Drawn | DG |
| Drawing Number | MD104 |

VA FORM 08 - 6231

Autodesk Docs://9123056 - Salisbury Steam Line Replacement/9123056 - VA Salisbury Stm Line Repl - R23_ME.rvt
9/27/2024 11:10:20 AM

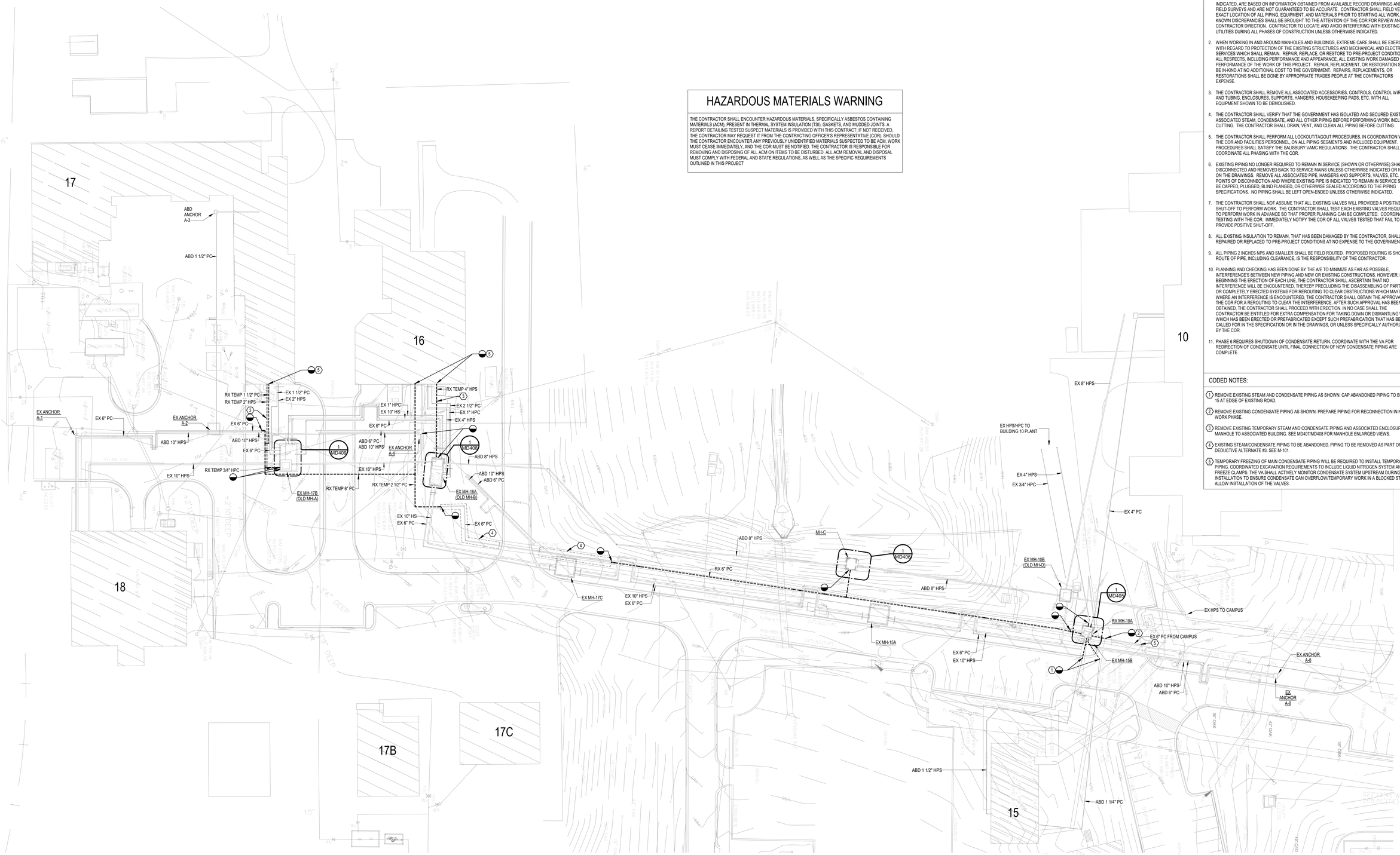


1 SITE PLAN - MECHANICAL - DEMOLITION - PHASE 6
1" = 30'-0"

N 0 15' 30' 60' 90'
1" = 30'

## HAZARDOUS MATERIALS WARNING

THE CONTRACTOR SHALL ENCOUNTER HAZARDOUS MATERIALS, SPECIFICALLY ASBESTOS CONTAINING MATERIALS (ACM), PRESENT IN THERMAL SYSTEM INSULATION (TSI), GASKETS, AND MUDDED JOINTS. A REPORT DETAILING TESTED SUSPECT MATERIALS IS PROVIDED WITH THIS CONTRACT; IF NOT RECEIVED, THE CONTRACTOR MAY REQUEST IT FROM THE CONTRACTING OFFICER'S REPRESENTATIVE (COR). SHOULD THE CONTRACTOR ENCOUNTER ANY PREVIOUSLY UNIDENTIFIED MATERIALS SUSPECTED TO BE ACM, WORK MUST CEASE IMMEDIATELY, AND THE COR MUST BE NOTIFIED. THE CONTRACTOR IS RESPONSIBLE FOR REMOVING AND DISPOSING OF ALL ACM ON ITEMS TO BE DISTURBED. ALL ACM REMOVAL AND DISPOSAL MUST COMPLY WITH FEDERAL AND STATE REGULATIONS, AS WELL AS THE SPECIFIC REQUIREMENTS OUTLINED IN THIS PROJECT

## DRAWING NOTES:

1. EXISTING CONDITIONS - I.E. PRESENCE, SIZE, AND LOCATION OF PIPING, EQUIPMENT, AND MATERIALS INDICATED, ARE BASED ON INFORMATION OBTAINED FROM AVAILABLE RECORD DRAWINGS AND FIELD SURVEYS AND ARE NOT GUARANTEED TO BE ACCURATE. CONTRACTOR SHALL FIELD VERIFY EXACT LOCATION OF ALL PIPING, EQUIPMENT, AND MATERIALS PRIOR TO STARTING ALL WORK. ANY KNOWN DISCREPANCIES SHALL BE BROUGHT TO THE ATTENTION OF THE COR FOR REVIEW AND CONTRACTOR DIRECTION. CONTRACTOR TO LOCATE AND AVOID INTERFERING WITH EXISTING UTILITIES DURING ALL PHASES OF CONSTRUCTION UNLESS OTHERWISE INDICATED.
2. WHEN WORKING IN AND AROUND MANHOLES AND BUILDINGS, EXTREME CARE SHALL BE EXERCISED WITH REGARD TO PROTECTION OF THE EXISTING STRUCTURES AND MECHANICAL AND ELECTRICAL SERVICES WHICH SHALL REMAIN. REPAIR, REPLACE, OR RESTORE TO PRE-PROJECT CONDITIONS IN ALL RESPECTS, INCLUDING PERFORMANCE AND APPEARANCE. ALL EXISTING WORK DAMAGED IN THE PERFORMANCE OF THE WORK OF THIS PROJECT. REPAIR, REPLACEMENT, OR RESTORATION SHALL BE IN-KIND AT NO ADDITIONAL COST TO THE GOVERNMENT. REPAIRS, REPLACEMENTS, OR RESTORATIONS SHALL BE DONE BY APPROPRIATE TRADES PEOPLE AT THE CONTRACTORS EXPENSE.
3. THE CONTRACTOR SHALL REMOVE ALL ASSOCIATED ACCESSORIES, CONTROLS, CONTROL WIRING AND TUBING, ENCLOSURES, SUPPORTS, HANGERS, HOUSEKEEPING PADS, ETC. WITH ALL EQUIPMENT SHOWN TO BE DEMOLISHED.
4. THE CONTRACTOR SHALL VERIFY THAT THE GOVERNMENT HAS ISOLATED AND SECURED EXISTING ASSOCIATED STEAM, CONDENSATE, AND ALL OTHER PIPING BEFORE PERFORMING WORK INCLUDING CUTTING. THE CONTRACTOR SHALL DRAIN, VENT, AND CLEAN ALL PIPING BEFORE CUTTING.
5. THE CONTRACTOR SHALL PERFORM ALL LOCKOUT/TAGOUT PROCEDURES, IN COORDINATION WITH THE COR AND FACILITIES PERSONNEL, ON ALL PIPING SEGMENTS AND INCLUDED EQUIPMENT. ALL PROCEDURES SHALL SATISFY THE SALISBURY VAMC REGULATIONS. THE CONTRACTOR SHALL COORDINATE ALL PHASING WITH THE COR.
6. EXISTING PIPING NO LONGER REQUIRED TO REMAIN IN SERVICE (SHOWN OR OTHERWISE) SHALL BE DISCONNECTED AND REMOVED BACK TO SERVICE MAINS UNLESS OTHERWISE INDICATED OR NOTED ON THE DRAWINGS. REMOVE ALL ASSOCIATED PIPE, HANGERS AND SUPPORTS, VALVES, ETC. ALL POINTS OF DISCONNECTION AND WHERE EXISTING PIPE IS INDICATED TO REMAIN IN SERVICE SHALL BE CAPPED, PLUGGED, BLIND FLANGED, OR OTHERWISE SEALED ACCORDING TO THE PIPING SPECIFICATIONS. NO PIPING SHALL BE LEFT OPEN-ENDED UNLESS OTHERWISE INDICATED.
7. THE CONTRACTOR SHALL NOT ASSUME THAT ALL EXISTING VALVES WILL PROVIDED A POSITIVE SHUT-OFF TO PERFORM WORK. THE CONTRACTOR SHALL TEST EACH EXISTING VALVES REQUIRED TO PERFORM WORK IN ADVANCE SO THAT PROPER PLANNING CAN BE COMPLETED. COORDINATE TESTING WITH THE COR. IMMEDIATELY NOTIFY THE COR OF ALL VALVES TESTED THAT FAIL TO PROVIDE POSITIVE SHUT-OFF.
8. ALL EXISTING INSULATION TO REMAIN, THAT HAS BEEN DAMAGED BY THE CONTRACTOR, SHALL BE REPAIRED OR REPLACED TO PRE-PROJECT CONDITIONS AT NO EXPENSE TO THE GOVERNMENT.
9. ALL PIPING 2 INCHES NPS AND SMALLER SHALL BE FIELD ROUTED. PROPOSED ROUTING IS SHOWN. ROUTE OF PIPE, INCLUDING CLEARANCE, IS THE RESPONSIBILITY OF THE CONTRACTOR.
10. PLANNING AND CHECKING HAS BEEN DONE BY THE A/E TO MINIMIZE AS FAR AS POSSIBLE, INTERFERENCE'S BETWEEN NEW PIPING AND NEW OR EXISTING CONSTRUCTIONS. HOWEVER, PRIOR BEGINNING THE ERECTION OF EACH LINE, THE CONTRACTOR SHALL ASCERTAIN THAT NO INTERFERENCE WILL BE ENCOUNTERED, THEREBY PRECLUDING THE DISASSEMBLING OF PARTIALLY OR COMPLETELY ERECTED SYSTEMS FOR REROUTING TO CLEAR OBSTRUCTIONS WHICH MAY EXIST. WHERE AN INTERFERENCE IS ENCOUNTERED, THE CONTRACTOR SHALL OBTAIN THE APPROVAL OF THE COR FOR A REROUTING TO CLEAR THE INTERFERENCE. AFTER SUCH APPROVAL HAS BEEN OBTAINED, THE CONTRACTOR SHALL PROCEED WITH ERECTION. IN NO CASE SHALL THE CONTRACTOR BE ENTITLED FOR EXTRA COMPENSATION FOR TAKING DOWN OR DISMANTLING WORK WHICH HAS BEEN ERECTED OR PREFABRICATED EXCEPT SUCH PREFABRICATION THAT HAS BEEN CALLED FOR IN THE SPECIFICATION OR IN THE DRAWINGS, OR UNLESS SPECIFICALLY AUTHORIZED BY THE COR.
11. PHASE 6 REQUIRES SHUTDOWN OF CONDENSATE RETURN. COORDINATE WITH THE VA FOR REDIRECTION OF CONDENSATE UNTIL FINAL CONNECTION OF NEW CONDENSATE PIPING ARE COMPLETE.

## CODED NOTES:

1. REMOVE EXISTING STEAM AND CONDENSATE PIPING AS SHOWN. CAP ABANDONED PIPING TO BUILDING 15 AT EDGE OF EXISTING ROAD.
2. REMOVE EXISTING CONDENSATE PIPING AS SHOWN. PREPARE PIPING FOR RECONNECTION IN NEW WORK PHASE.
3. REMOVE EXISTING TEMPORARY STEAM AND CONDENSATE PIPING AND ASSOCIATED ENCLOSURE FROM MANHOLE TO ASSOCIATED BUILDING. SEE MD407/MD408 FOR MANHOLE ENLARGED VIEWS.
4. EXISTING STEAM/CONDENSATE PIPING TO BE ABANDONED. PIPING TO BE REMOVED AS PART OF DEDUCTIVE ALTERNATE #3. SEE M-101.
5. TEMPORARY FREEZING OF MAIN CONDENSATE PIPING WILL BE REQUIRED TO INSTALL TEMPORARY PIPING. COORDINATED EXCAVATION REQUIREMENTS TO INCLUDE LIQUID NITROGEN SYSTEM AND FREEZE CLAMPS. THE VA SHALL ACTIVELY MONITOR CONDENSATE SYSTEM UPSTREAM DURING INSTALLATION TO ENSURE CONDENSATE CAN OVERFLOW/TEMPORARY WORK IN A BLOCKED STATE TO ALLOW INSTALLATION OF THE VALVES.

| Revisions | Date |
|---|---|

CONSULTANT

ARCHITECT/ENGINEER OF RECORD
2014-2024 10TH ANNIVERSARY
Above Group
ENGINEERING | DESIGN | CONSULTING
SDVOSB
www.abovegroupinc.com
COA/CA Lic. No. 31120
305 East Dr., Suite H,
Melbourne, Florida 32904
PH: 321.345.9026

STAMP
STATE OF MARYLAND
GEOFFREY S. CHENOWETH
No. 28825
REGISTERED
PROFESSIONAL ENGINEER

Office of Construction and Facilities Management
VA U.S. Department of Veterans Affairs

| | | | |
|---|---|---|---|
| Drawing Title: SITE PLAN - MECHANICAL - DEMOLITION - PHASE 6 | Phase: 100% CONSTRUCTION DOCUMENTS | Project Title: STEAM LINE REPLACEMENT | Project Number: 659-24-903 |
| | | | Building Number: |
| Approved: | | Location: SALISBURY VAMC | Drawing Number: MD106 |
| | | Issue Date: 09/27/2024 · Checked: GC · Drawn: DG | |

VA FORM 08 - 6231

Autodesk Docs://9123056 - Salisbury Steam Line Replacement/9123056 - VA Salisbury Stm Line Repl - R23_ME.rvt
9/27/2024 11:10:23 AM

## HAZARDOUS MATERIALS WARNING

THE CONTRACTOR SHALL ENCOUNTER HAZARDOUS MATERIALS, SPECIFICALLY ASBESTOS CONTAINING MATERIALS (ACM), PRESENT IN THERMAL SYSTEM INSULATION (TSI), GASKETS, AND MUDDED JOINTS. A REPORT DETAILING TESTED SUSPECT MATERIALS IS PROVIDED WITH THIS CONTRACT; IF NOT RECEIVED, THE CONTRACTOR MAY REQUEST IT FROM THE CONTRACTING OFFICER'S REPRESENTATIVE (COR). SHOULD THE CONTRACTOR ENCOUNTER ANY PREVIOUSLY UNIDENTIFIED MATERIALS SUSPECTED TO BE ACM, WORK MUST CEASE IMMEDIATELY, AND THE COR MUST BE NOTIFIED. THE CONTRACTOR IS RESPONSIBLE FOR REMOVING AND DISPOSING OF ALL ACM ON ITEMS TO BE DISTURBED. ALL ACM REMOVAL AND DISPOSAL MUST COMPLY WITH FEDERAL AND STATE REGULATIONS, AS WELL AS THE SPECIFIC REQUIREMENTS OUTLINED IN THIS PROJECT

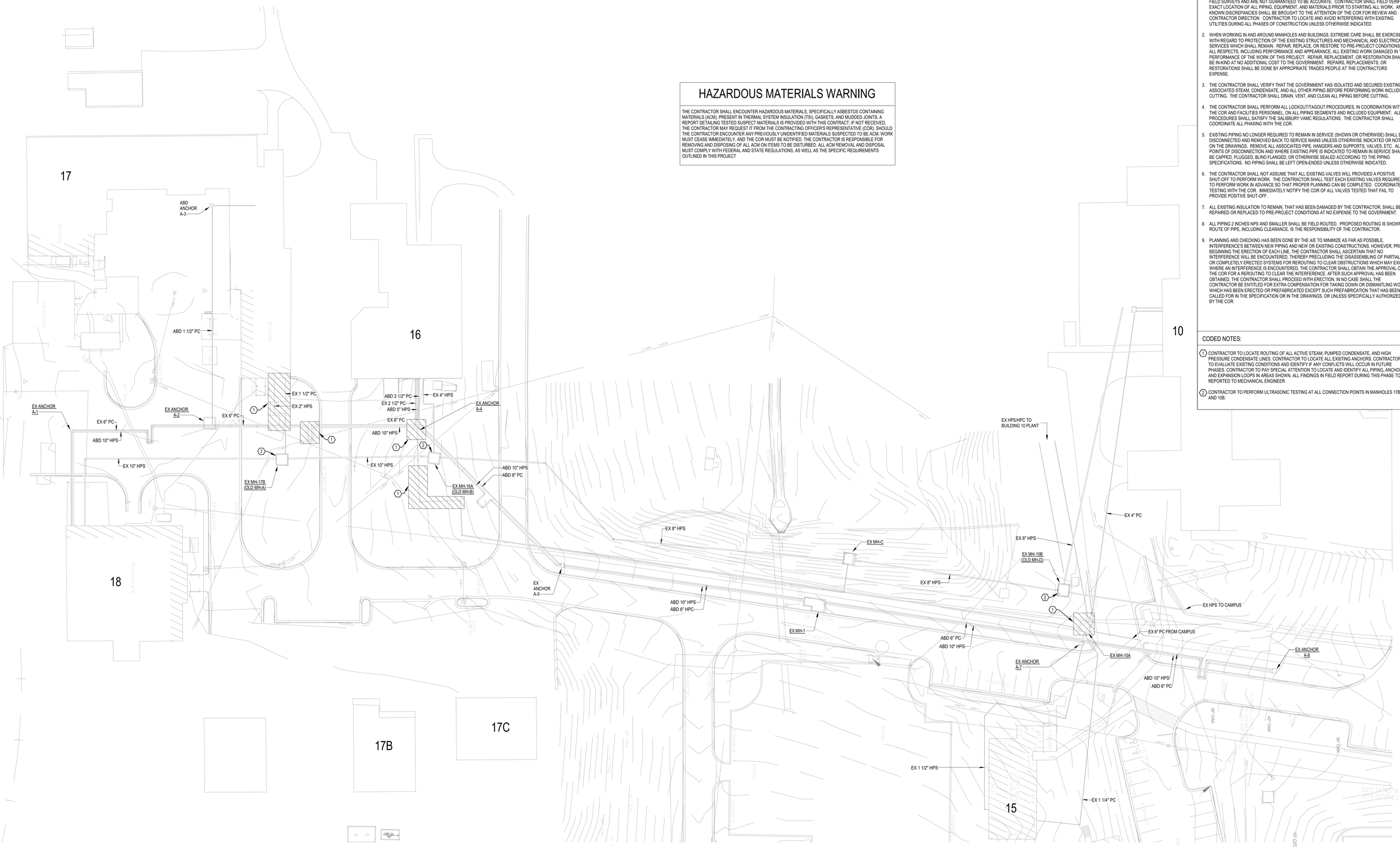


1 SITE PLAN - MECHANICAL - NEW WORK - PHASE 1
1" = 30'-0"

N 0 15' 30' 60' 90'
1" = 30'

### DRAWING NOTES:

1. EXISTING CONDITIONS - I.E. PRESENCE, SIZE, AND LOCATION OF PIPING, EQUIPMENT, AND MATERIALS INDICATED, ARE BASED ON INFORMATION OBTAINED FROM AVAILABLE RECORD DRAWINGS AND FIELD SURVEYS AND ARE NOT GUARANTEED TO BE ACCURATE. CONTRACTOR SHALL FIELD VERIFY EXACT LOCATION OF ALL PIPING, EQUIPMENT, AND MATERIALS PRIOR TO STARTING ALL WORK. ANY KNOWN DISCREPANCIES SHALL BE BROUGHT TO THE ATTENTION OF THE COR FOR REVIEW AND CONTRACTOR DIRECTION. CONTRACTOR TO LOCATE AND AVOID INTERFERING WITH EXISTING UTILITIES DURING ALL PHASES OF CONSTRUCTION UNLESS OTHERWISE INDICATED.
2. WHEN WORKING IN AND AROUND MANHOLES AND BUILDINGS, EXTREME CARE SHALL BE EXERCISED WITH REGARD TO PROTECTION OF THE EXISTING STRUCTURES AND MECHANICAL AND ELECTRICAL SERVICES WHICH SHALL REMAIN. REPAIR, REPLACE, OR RESTORE TO PRE-PROJECT CONDITIONS IN ALL RESPECTS, INCLUDING PERFORMANCE AND APPEARANCE. ALL EXISTING WORK DAMAGED IN THE PERFORMANCE OF THE WORK OF THIS PROJECT. REPAIR, REPLACEMENT, OR RESTORATION SHALL BE IN-KIND AT NO ADDITIONAL COST TO THE GOVERNMENT. REPAIRS, REPLACEMENTS, OR RESTORATIONS SHALL BE DONE BY APPROPRIATE TRADES PEOPLE AT THE CONTRACTORS EXPENSE.
3. THE CONTRACTOR SHALL VERIFY THAT THE GOVERNMENT HAS ISOLATED AND SECURED EXISTING ASSOCIATED STEAM, CONDENSATE, AND ALL OTHER PIPING BEFORE PERFORMING WORK INCLUDING CUTTING. THE CONTRACTOR SHALL DRAIN, VENT, AND CLEAN ALL PIPING BEFORE CUTTING.
4. THE CONTRACTOR SHALL PERFORM ALL LOCKOUT/TAGOUT PROCEDURES, IN COORDINATION WITH THE COR AND FACILITIES PERSONNEL, ON ALL PIPING SEGMENTS AND INCLUDED EQUIPMENT. ALL PROCEDURES SHALL SATISFY THE SALISBURY VAMC REGULATIONS. THE CONTRACTOR SHALL COORDINATE ALL PHASING WITH THE COR.
5. EXISTING PIPING NO LONGER REQUIRED TO REMAIN IN SERVICE (SHOWN OR OTHERWISE) SHALL BE DISCONNECTED AND REMOVED BACK TO SERVICE MAINS UNLESS OTHERWISE INDICATED OR NOTED ON THE DRAWINGS. REMOVE ALL ASSOCIATED PIPE, HANGERS AND SUPPORTS, VALVES, ETC. ALL POINTS OF DISCONNECTION AND WHERE EXISTING PIPE IS INDICATED TO REMAIN IN SERVICE SHALL BE CAPPED, PLUGGED, BLIND FLANGED, OR OTHERWISE SEALED ACCORDING TO THE PIPING SPECIFICATIONS. NO PIPING SHALL BE LEFT OPEN-ENDED UNLESS OTHERWISE INDICATED.
6. THE CONTRACTOR SHALL NOT ASSUME THAT ALL EXISTING VALVES WILL PROVIDED A POSITIVE SHUT-OFF TO PERFORM WORK. THE CONTRACTOR SHALL TEST EACH EXISTING VALVES REQUIRED TO PERFORM WORK IN ADVANCE SO THAT PROPER PLANNING CAN BE COMPLETED. COORDINATE TESTING WITH THE COR. IMMEDIATELY NOTIFY THE COR OF ALL VALVES TESTED THAT FAIL TO PROVIDE POSITIVE SHUT-OFF.
7. ALL EXISTING INSULATION TO REMAIN, THAT HAS BEEN DAMAGED BY THE CONTRACTOR, SHALL BE REPAIRED OR REPLACED TO PRE-PROJECT CONDITIONS AT NO EXPENSE TO THE GOVERNMENT.
8. ALL PIPING 2 INCHES NPS AND SMALLER SHALL BE FIELD ROUTED. PROPOSED ROUTING IS SHOWN. ROUTE OF PIPE, INCLUDING CLEARANCE, IS THE RESPONSIBILITY OF THE CONTRACTOR.
9. PLANNING AND CHECKING HAS BEEN DONE BY THE A/E TO MINIMIZE AS FAR AS POSSIBLE INTERFERENCE'S BETWEEN NEW PIPING AND NEW OR EXISTING CONSTRUCTIONS. HOWEVER, PRIOR BEGINNING THE ERECTION OF EACH LINE, THE CONTRACTOR SHALL ASCERTAIN THAT NO INTERFERENCE WILL BE ENCOUNTERED, THEREBY PRECLUDING THE DISASSEMBLING OF PARTIALLY OR COMPLETELY ERECTED SYSTEMS FOR REROUTING TO CLEAR OBSTRUCTIONS WHICH MAY EXIST. WHERE AN INTERFERENCE IS ENCOUNTERED, THE CONTRACTOR SHALL OBTAIN THE APPROVAL OF THE COR FOR A REROUTING TO CLEAR THE INTERFERENCE. AFTER SUCH APPROVAL HAS BEEN OBTAINED, THE CONTRACTOR SHALL PROCEED WITH ERECTION. IN NO CASE SHALL THE CONTRACTOR BE ENTITLED FOR EXTRA COMPENSATION FOR TAKING DOWN OR DISMANTLING WORK WHICH HAS BEEN ERECTED OR PREFABRICATED EXCEPT SUCH PREFABRICATION THAT HAS BEEN CALLED FOR IN THE SPECIFICATION OR IN THE DRAWINGS, OR UNLESS SPECIFICALLY AUTHORIZED BY THE COR.

### CODED NOTES:

1. CONTRACTOR TO LOCATE ROUTNG OF ALL ACTIVE STEAM, PUMPED CONDENSATE, AND HIGH PRESSURE CONDENSATE LINES. CONTRACTOR TO LOCATE ALL EXISTING ANCHORS. CONTRACTOR TO EVALUATE EXISTING CONDITIONS AND IDENTIFY IF ANY CONFLICTS WILL OCCUR IN FUTURE PHASES. CONTRACTOR TO PAY SPECIAL ATTENTION TO LOCATE AND IDENTIFY ALL PIPING, ANCHORS, AND EXPANSION LOOPS IN AREAS SHOWN. ALL FINDINGS IN FIELD REPORT DURING THIS PHASE TO BE REPORTED TO MECHANICAL ENGINEER.
2. CONTRACTOR TO PERFORM ULTRASONIC TESTING AT ALL CONNECTION POINTS IN MANHOLES 17B, 16A, AND 10B.

| Revisions | Date |
|---|---|
| | |

CONSULTANT

ARCHITECT/ENGINEER OF RECORD

2014-2024 10TH ANNIVERSARY
Above Group
ENGINEERING | DESIGN | CONSULTING
SDVOSB
www.abovegroupinc.com
COA/CA Lic. No. 31120
305 East Dr., Suite H,
Melbourne, Florida 32904
PH: 321.345.9026

STAMP

STATE OF MARYLAND
GEOFFREY S. CHEZOM-ETA
No. 28825
REGISTERED
PROFESSIONAL ENGINEER

Office of Construction and Facilities Management

VA U.S. Department of Veterans Affairs

| | |
|---|---|
| Drawing Title | SITE PLAN - MECHANICAL - NEW WORK - PHASE 1 |
| Phase | 100% CONSTRUCTION DOCUMENTS |
| Project Title | STEAM LINE REPLACEMENT |
| Project Number | 659-24-903 |
| Building Number | |
| Approved: | |
| Location | SALISBURY VAMC |
| Issue Date | 09/27/2024 |
| Checked | GC |
| Drawn | DG |
| Drawing Number | MP101 |

VA FORM 08 - 6231

Autodesk Docs://01230/56 - Salisbury Steam Line Replacement/01230/56 - VA Salisbury Stm Line Repl - R23_ME.rvt
9/27/2024 11:10:25 AM

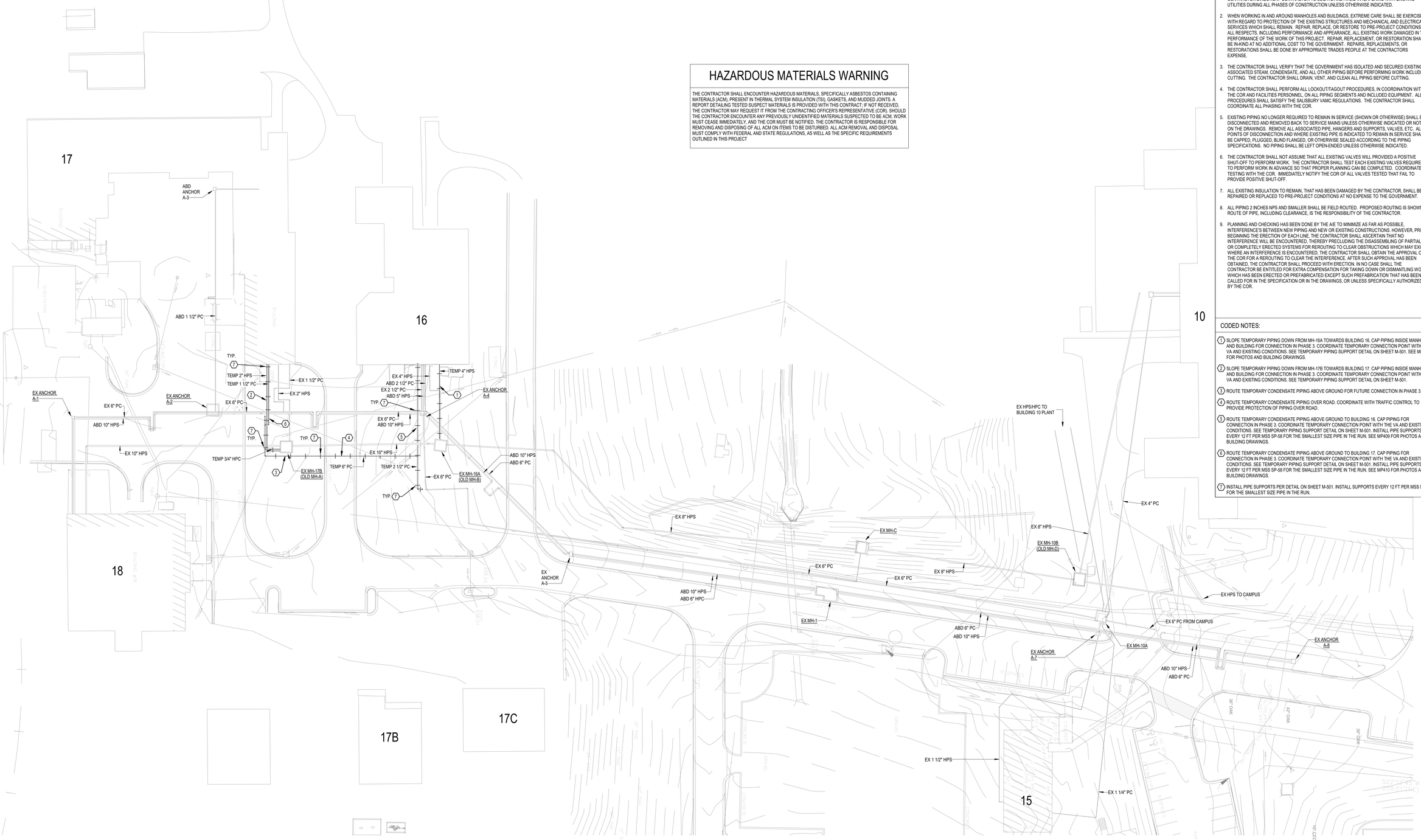


1 SITE PLAN - MECHANICAL - NEW WORK - PHASE 2
1" = 30'-0"

N 0 15' 30' 60' 90'
1" = 30'

## HAZARDOUS MATERIALS WARNING

THE CONTRACTOR SHALL ENCOUNTER HAZARDOUS MATERIALS, SPECIFICALLY ASBESTOS CONTAINING MATERIALS (ACM), PRESENT IN THERMAL SYSTEM INSULATION (TSI), GASKETS, AND MUDDED JOINTS. A REPORT DETAILING TESTED SUSPECT MATERIALS IS PROVIDED WITH THIS CONTRACT, IF NOT RECEIVED, THE CONTRACTOR MAY REQUEST IT FROM THE CONTRACTING OFFICER'S REPRESENTATIVE (COR). SHOULD THE CONTRACTOR ENCOUNTER ANY PREVIOUSLY UNIDENTIFIED MATERIALS SUSPECTED TO BE ACM, WORK MUST CEASE IMMEDIATELY, AND THE COR MUST BE NOTIFIED. THE CONTRACTOR IS RESPONSIBLE FOR REMOVING AND DISPOSING OF ALL ACM ON ITEMS TO BE DISTURBED. ALL ACM REMOVAL AND DISPOSAL MUST COMPLY WITH FEDERAL AND STATE REGULATIONS, AS WELL AS THE SPECIFIC REQUIREMENTS OUTLINED IN THIS PROJECT

## DRAWING NOTES:

1. EXISTING CONDITIONS - I.E. PRESENCE, SIZE, AND LOCATION OF PIPING, EQUIPMENT, AND MATERIALS INDICATED, ARE BASED ON INFORMATION OBTAINED FROM AVAILABLE RECORD DRAWINGS AND FIELD SURVEYS AND ARE NOT GUARANTEED TO BE ACCURATE. CONTRACTOR SHALL FIELD VERIFY EXACT LOCATION OF ALL PIPING, EQUIPMENT, AND MATERIALS PRIOR TO STARTING ALL WORK. ANY KNOWN DISCREPANCIES SHALL BE BROUGHT TO THE ATTENTION OF THE COR FOR REVIEW AND CONTRACTOR DIRECTION. CONTRACTOR TO LOCATE AND AVOID INTERFERING WITH EXISTING UTILITIES DURING ALL PHASES OF CONSTRUCTION UNLESS OTHERWISE INDICATED.
2. WHEN WORKING IN AND AROUND MANHOLES AND BUILDINGS, EXTREME CARE SHALL BE EXERCISED WITH REGARD TO PROTECTION OF THE EXISTING STRUCTURES AND MECHANICAL AND ELECTRICAL SERVICES WHICH SHALL REMAIN. REPAIR, REPLACE, OR RESTORE TO PRE-PROJECT CONDITIONS IN ALL RESPECTS, INCLUDING PERFORMANCE AND APPEARANCE. ALL EXISTING WORK DAMAGED IN THE PERFORMANCE OF THE WORK OF THIS PROJECT. REPAIR, REPLACEMENT, OR RESTORATION SHALL BE IN-KIND AT NO ADDITONAL COST TO THE GOVERNMENT. REPAIRS, REPLACEMENTS, OR RESTORATIONS SHALL BE DONE BY APPROPRIATE TRADES PEOPLE AT THE CONTRACTORS EXPENSE.
3. THE CONTRACTOR SHALL VERIFY THAT THE GOVERNMENT HAS ISOLATED AND SECURED EXISTING ASSOCIATED STEAM, CONDENSATE, AND ALL OTHER PIPING BEFORE PERFORMING WORK INCLUDING CUTTING. THE CONTRACTOR SHALL DRAIN, VENT, AND CLEAN ALL PIPING BEFORE CUTTING.
4. THE CONTRACTOR SHALL PERFORM ALL LOCKOUT/TAGOUT PROCEDURES, IN COORDINATION WITH THE COR AND FACILITIES PERSONNEL, ON ALL PIPING SEGMENTS AND INCLUDED EQUIPMENT. ALL PROCEDURES SHALL SATISFY THE SALISBURY VAMC REGULATIONS. THE CONTRACTOR SHALL COORDINATE ALL PHASING WITH THE COR.
5. EXISTING PIPING NO LONGER REQUIRED TO REMAIN IN SERVICE (SHOWN OR OTHERWISE) SHALL BE DISCONNECTED AND REMOVED BACK TO SERVICE MAINS UNLESS OTHERWISE INDICATED OR NOTED ON THE DRAWINGS. REMOVE ALL ASSOCIATED PIPE, HANGERS AND SUPPORTS, VALVES, ETC. ALL POINTS OF DISCONNECTION AND WHERE EXISTING PIPE IS INDICATED TO REMAIN IN SERVICE SHALL BE CAPPED, PLUGGED, BLIND FLANGED, OR OTHERWISE SEALED ACCORDING TO THE PIPING SPECIFICATIONS. NO PIPING SHALL BE LEFT OPEN-ENDED UNLESS OTHERWISE INDICATED.
6. THE CONTRACTOR SHALL NOT ASSUME THAT ALL EXISTING VALVES WILL PROVIDED A POSITIVE SHUT-OFF TO PERFORM WORK. THE CONTRACTOR SHALL TEST EACH EXISTING VALVES REQUIRED TO PERFORM WORK IN ADVANCE SO THAT PROPER PLANNING CAN BE COMPLETED. COORDINATE TESTING WITH THE COR. IMMEDIATELY NOTIFY THE COR OF ALL VALVES TESTED THAT FAIL TO PROVIDE POSITIVE SHUT-OFF.
7. ALL EXISTING INSULATION TO REMAIN. THAT HAS BEEN DAMAGED BY THE CONTRACTOR, SHALL BE REPAIRED OR REPLACED TO PRE-PROJECT CONDITIONS AT NO EXPENSE TO THE GOVERNMENT.
8. ALL PIPING 2 INCHES NPS AND SMALLER SHALL BE FIELD ROUTED. PROPOSED ROUTING IS SHOWN. ROUTE OF PIPE, INCLUDING CLEARANCE, IS THE RESPONSIBILITY OF THE CONTRACTOR.
9. PLANNING AND CHECKING HAS BEEN DONE BY THE A/E TO MINIMIZE AS FAR AS POSSIBLE, INTERFERENCE'S BETWEEN NEW PIPING AND NEW OR EXISTING CONSTRUCTIONS. HOWEVER, PRIOR BEGINNING THE ERECTION OF EACH LINE, THE CONTRACTOR SHALL ASCERTAIN THAT NO INTERFERENCE WILL BE ENCOUNTERED, THEREBY PRECLUDING THE DISASSEMBLING OF PARTIALLY OR COMPLETELY ERECTED SYSTEMS FOR REROUTING TO CLEAR OBSTRUCTIONS WHICH MAY EXIST. WHERE AN INTERFERENCE IS ENCOUNTERED, THE CONTRACTOR SHALL OBTAIN THE APPROVAL OF THE COR FOR A REROUTING TO CLEAR THE INTERFERENCE. AFTER SUCH APPROVAL HAS BEEN OBTAINED, THE CONTRACTOR SHALL PROCEED WITH ERECTION. IN NO CASE SHALL THE CONTRACTOR BE ENTITLED FOR EXTRA COMPENSATION FOR TAKING DOWN OR DISMANTLING WORK WHICH HAS BEEN ERECTED OR PREFABRICATED EXCEPT SUCH PREFABRICATION THAT HAS BEEN CALLED FOR IN THE SPECIFICATION OR IN THE DRAWINGS, OR UNLESS SPECIFICALLY AUTHORIZED BY THE COR.

## CODED NOTES:

1. SLOPE TEMPORARY PIPING DOWN FROM MH-16A TOWARDS BUILDING 16. CAP PIPING INSIDE MANHOLE AND BUILDING FOR CONNECTION IN PHASE 3. COORDINATE TEMPORARY CONNECTION POINT WITH THE VA AND EXISTING CONDITIONS. SEE TEMPORARY PIPING SUPPORT DETAIL ON SHEET M-501. SEE MP409 FOR PHOTOS AND BUILDING DRAWINGS.
2. SLOPE TEMPORARY PIPING DOWN FROM MH-17B TOWARDS BUILDING 17. CAP PIPING INSIDE MANHOLE AND BUILDING FOR CONNECTION IN PHASE 3. COORDINATE TEMPORARY CONNECTION POINT WITH THE VA AND EXISTING CONDITIONS. SEE TEMPORARY PIPING SUPPORT DETAIL ON SHEET M-501.
3. ROUTE TEMPORARY CONDENSATE PIPING ABOVE GROUND FOR FUTURE CONNECTION IN PHASE 3.
4. ROUTE TEMPORARY CONDENSATE PIPING OVER ROAD. COORDINATE WITH TRAFFIC CONTROL TO PROVIDE PROTECTION OF PIPING OVER ROAD.
5. ROUTE TEMPORARY CONDENSATE PIPING ABOVE GROUND TO BUILDING 16. CAP PIPING FOR CONNECTION IN PHASE 3. COORDINATE TEMPORARY CONNECTION POINT WITH THE VA AND EXISTING CONDITIONS. SEE TEMPORARY PIPING SUPPORT DETAIL ON SHEET M-501. INSTALL PIPE SUPPORTS EVERY 12 FT PER MSS SP-58 FOR THE SMALLEST SIZE PIPE IN THE RUN. SEE MP409 FOR PHOTOS AND BUILDING DRAWINGS.
6. ROUTE TEMPORARY CONDENSATE PIPING ABOVE GROUND TO BUILDING 17. CAP PIPING FOR CONNECTION IN PHASE 3. COORDINATE TEMPORARY CONNECTION POINT WITH THE VA AND EXISTING CONDITIONS. SEE TEMPORARY PIPING SUPPORT DETAIL ON SHEET M-501. INSTALL PIPE SUPPORTS EVERY 12 FT PER MSS SP-58 FOR THE SMALLEST SIZE PIPE IN THE RUN. SEE MP410 FOR PHOTOS AND BUILDING DRAWINGS.
7. INSTALL PIPE SUPPORTS PER DETAIL ON SHEET M-501. INSTALL SUPPORTS EVERY 12 FT PER MSS SP-58 FOR THE SMALLEST SIZE PIPE IN THE RUN.

| Revisions | Date |
|---|---|
| | |

CONSULTANT

ARCHITECT/ENGINEER OF RECORD

2014-2024 10TH ANNIVERSARY Above Group ENGINEERING | DESIGN | CONSULTING
SDVOSB
www.abovegroupinc.com
COA/CA Lic. No. 31120
305 East Dr., Suite H,
Melbourne, Florida 32904
PH: 321.345.9026

STAMP

STATE OF MARYLAND — GEOFFREY S. CHEADWETH — No. 28825 — REGISTERED PROFESSIONAL ENGINEER

Office of Construction and Facilities Management

VA U.S. Department of Veterans Affairs

| | | | |
|---|---|---|---|
| Drawing Title: SITE PLAN - MECHANICAL - NEW WORK - PHASE 2 | Phase: 100% CONSTRUCTION DOCUMENTS | Project Title: STEAM LINE REPLACEMENT | Project Number: 659-24-903 |
| | | | Building Number: |
| Approved: | | Location: SALISBURY VAMC | Drawing Number: MP102 |
| | | Issue Date: 09/27/2024 — Checked: GC — Drawn: DG | |

VA FORM 08 - 6231

Autodesk Docs://R123058 - Salisbury Steam Line Replacement/R123058 - VA Salisbury Stm Line Repl - R23_ME.rvt
9/27/2024 11:10:28 AM

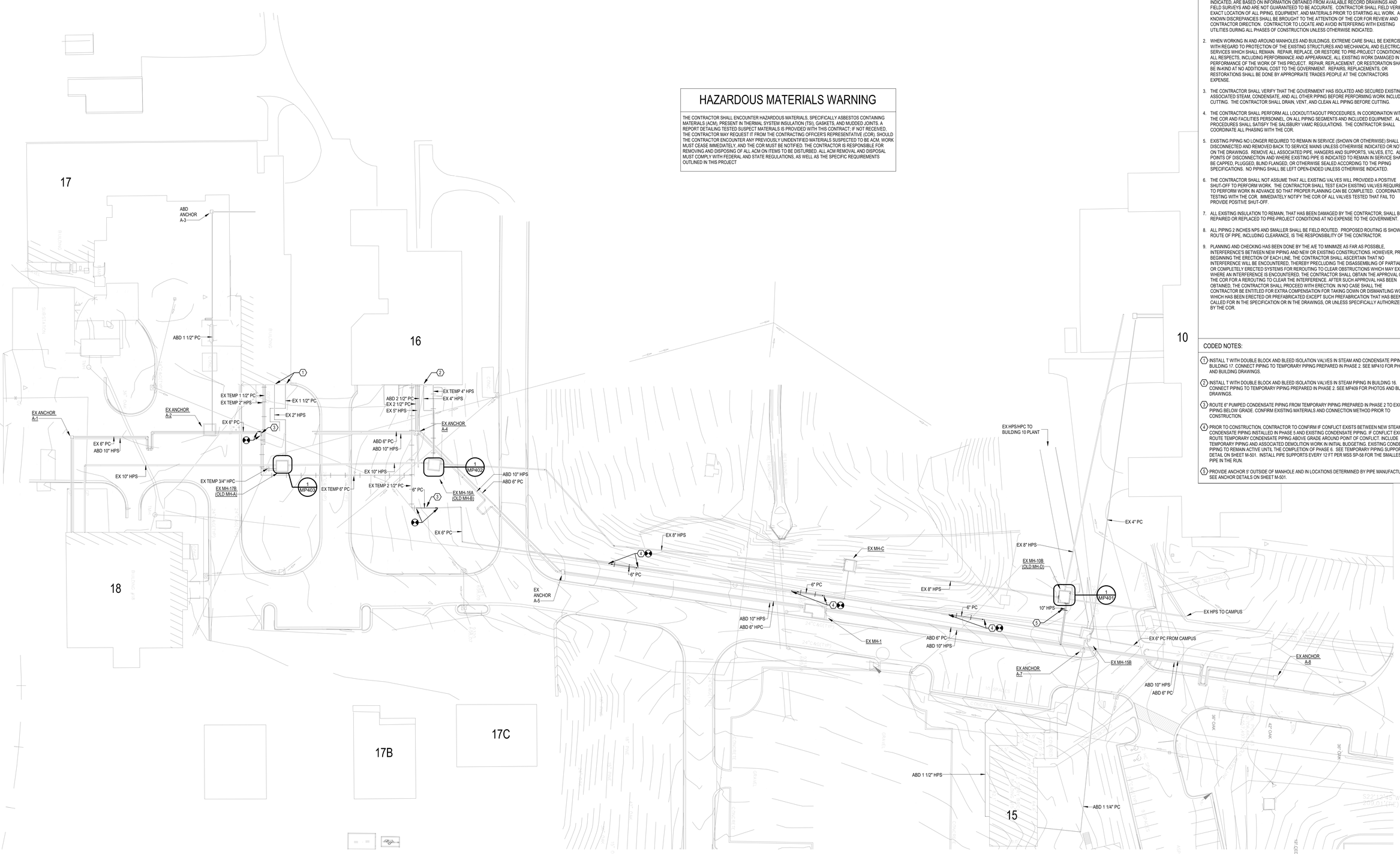


# HAZARDOUS MATERIALS WARNING

THE CONTRACTOR SHALL ENCOUNTER HAZARDOUS MATERIALS, SPECIFICALLY ASBESTOS CONTAINING MATERIALS (ACM), PRESENT IN THERMAL SYSTEM INSULATION (TSI), GASKETS, AND MUDDED JOINTS. A REPORT DETAILING TESTED SUSPECT MATERIALS IS PROVIDED WITH THIS CONTRACT, IF NOT RECEIVED, THE CONTRACTOR MAY REQUEST IT FROM THE CONTRACTING OFFICER'S REPRESENTATIVE (COR). SHOULD THE CONTRACTOR ENCOUNTER ANY PREVIOUSLY UNIDENTIFIED MATERIALS SUSPECTED TO BE ACM, WORK MUST CEASE IMMEDIATELY, AND THE COR MUST BE NOTIFIED. THE CONTRACTOR IS RESPONSIBLE FOR REMOVING AND DISPOSING OF ALL ACM ON ITEMS TO BE DISTURBED. ALL ACM REMOVAL AND DISPOSAL MUST COMPLY WITH FEDERAL AND STATE REGULATIONS, AS WELL AS THE SPECIFIC REQUIREMENTS OUTLINED IN THIS PROJECT

## DRAWING NOTES:

1. EXISTING CONDITIONS - I.E. PRESENCE, SIZE, AND LOCATION OF PIPING, EQUIPMENT, AND MATERIALS INDICATED, ARE BASED ON INFORMATION OBTAINED FROM AVAILABLE RECORD DRAWINGS AND FIELD SURVEYS AND ARE NOT GUARANTEED TO BE ACCURATE. CONTRACTOR SHALL FIELD VERIFY EXACT LOCATION OF ALL PIPING, EQUIPMENT, AND MATERIALS PRIOR TO STARTING ALL WORK. ANY KNOWN DISCREPANCIES SHALL BE BROUGHT TO THE ATTENTION OF THE COR FOR REVIEW AND CONTRACTOR DIRECTION. CONTRACTOR TO LOCATE AND AVOID INTERFERING WITH EXISTING UTILITIES DURING ALL PHASES OF CONSTRUCTION UNLESS OTHERWISE INDICATED.
2. WHEN WORKING IN AND AROUND MANHOLES AND BUILDINGS, EXTREME CARE SHALL BE EXERCISED WITH REGARD TO PROTECTION OF THE EXISTING STRUCTURES AND MECHANICAL AND ELECTRICAL SERVICES WHICH SHALL REMAIN. REPAIR, REPLACE, OR RESTORE TO PRE-PROJECT CONDITIONS IN ALL RESPECTS, INCLUDING PERFORMANCE AND APPEARANCE. ALL EXISTING WORK DAMAGED IN THE PERFORMANCE OF THE WORK OF THIS PROJECT. REPAIR, REPLACEMENT, OR RESTORATION SHALL BE IN-KIND AT NO ADDITONAL COST TO THE GOVERNMENT. REPAIRS, REPLACEMENTS, OR RESTORATIONS SHALL BE DONE BY APPROPRIATE TRADES PEOPLE AT THE CONTRACTORS EXPENSE.
3. THE CONTRACTOR SHALL VERIFY THAT THE GOVERNMENT HAS ISOLATED AND SECURED EXISTING ASSOCIATED STEAM, CONDENSATE, AND ALL OTHER PIPING BEFORE PERFORMING WORK INCLUDING CUTTING. THE CONTRACTOR SHALL DRAIN, VENT, AND CLEAN ALL PIPING BEFORE CUTTING.
4. THE CONTRACTOR SHALL PERFORM ALL LOCKOUT/TAGOUT PROCEDURES, IN COORDINATION WITH THE COR AND FACILITIES PERSONNEL, ON ALL PIPING SEGMENTS AND INCLUDED EQUIPMENT. ALL PROCEDURES SHALL SATISFY THE SALISBURY VAMC REGULATIONS. THE CONTRACTOR SHALL COORDINATE ALL PHASING WITH THE COR.
5. EXISTING PIPING NO LONGER REQUIRED TO REMAIN IN SERVICE (SHOWN OR OTHERWISE) SHALL BE DISCONNECTED AND REMOVED BACK TO SERVICE MAINS UNLESS OTHERWISE INDICATED OR NOTED ON THE DRAWINGS. REMOVE ALL ASSOCIATED PIPE, HANGERS AND SUPPORTS, VALVES, ETC. ALL POINTS OF DISCONNECTION AND WHERE EXISTING PIPE IS INDICATED TO REMAIN IN SERVICE SHALL BE CAPPED, PLUGGED, BLIND FLANGED, OR OTHERWISE SEALED ACCORDING TO THE PIPING SPECIFICATIONS. NO PIPING SHALL BE LEFT OPEN-ENDED UNLESS OTHERWISE INDICATED.
6. THE CONTRACTOR SHALL NOT ASSUME THAT ALL EXISTING VALVES WILL PROVIDED A POSITIVE SHUT-OFF TO PERFORM WORK. THE CONTRACTOR SHALL TEST EACH EXISTING VALVES REQUIRED TO PERFORM WORK IN ADVANCE SO THAT PROPER PLANNING CAN BE COMPLETED. COORDINATE TESTING WITH THE COR. IMMEDIATELY NOTIFY THE COR OF ALL VALVES TESTED THAT FAIL TO PROVIDE POSITIVE SHUT-OFF.
7. ALL EXISTING INSULATION TO REMAIN, THAT HAS BEEN DAMAGED BY THE CONTRACTOR, SHALL BE REPAIRED OR REPLACED TO PRE-PROJECT CONDITIONS AT NO EXPENSE TO THE GOVERNMENT.
8. ALL PIPING 2 INCHES NPS AND SMALLER SHALL BE FIELD ROUTED. PROPOSED ROUTING IS SHOWN. ROUTE OF PIPE, INCLUDING CLEARANCE, IS THE RESPONSIBILITY OF THE CONTRACTOR.
9. PLANNING AND CHECKING HAS BEEN DONE BY THE A/E TO MINIMIZE AS FAR AS POSSIBLE INTERFERENCE'S BETWEEN NEW PIPING AND NEW OR EXISTING CONSTRUCTIONS. HOWEVER, PRIOR BEGINNING THE ERECTION OF EACH LINE, THE CONTRACTOR SHALL ASCERTAIN THAT NO INTERFERENCE WILL BE ENCOUNTERED, THEREBY PRECLUDING THE DISASSEMBLING OF PARTIALLY OR COMPLETELY ERECTED SYSTEMS FOR REROUTING TO CLEAR OBSTRUCTIONS WHICH MAY EXIST. WHERE AN INTERFERENCE IS ENCOUNTERED, THE CONTRACTOR SHALL OBTAIN THE APPROVAL OF THE COR FOR A REROUTING TO CLEAR THE INTERFERENCE. AFTER SUCH APPROVAL HAS BEEN OBTAINED, THE CONTRACTOR SHALL PROCEED WITH ERECTION. IN NO CASE SHALL THE CONTRACTOR BE ENTITLED FOR EXTRA COMPENSATION FOR TAKING DOWN OR DISMANTLING WORK WHICH HAS BEEN ERECTED OR PREFABRICATED EXCEPT SUCH PREFABRICATION THAT HAS BEEN CALLED FOR IN THE SPECIFICATION OR IN THE DRAWINGS, OR UNLESS SPECIFICALLY AUTHORIZED BY THE COR.

## CODED NOTES:

1. INSTALL T WITH DOUBLE BLOCK AND BLEED ISOLATION VALVES IN STEAM AND CONDENSATE PIPING IN BUILDING 17. CONNECT PIPING TO TEMPORARY PIPING PREPARED IN PHASE 2. SEE MP410 FOR PHOTOS AND BUILDING DRAWINGS.
2. INSTALL T WITH DOUBLE BLOCK AND BLEED ISOLATION VALVES IN STEAM PIPING IN BUILDING 16. CONNECT PIPING TO TEMPORARY PIPING PREPARED IN PHASE 2. SEE MP409 FOR PHOTOS AND BUILDING DRAWINGS.
3. ROUTE 6" PUMPED CONDENSATE PIPING FROM TEMPORARY PIPING PREPARED IN PHASE 2 TO EXISTING PIPING BELOW GRADE. CONFIRM EXISTING MATERIALS AND CONNECTION METHOD PRIOR TO CONSTRUCTION.
4. PRIOR TO CONSTRUCTION, CONTRACTOR TO CONFIRM IF CONFLICT EXISTS BETWEEN NEW STEAM AND CONDENSATE PIPING INSTALLED IN PHASE 5 AND EXISTING CONDENSATE PIPING. IF CONFLICT EXISTS, ROUTE TEMPORARY CONDENSATE PIPING ABOVE GRADE AROUND POINT OF CONFLICT. INCLUDE TEMPORARY PIPING AND ASSOCIATED DEMOLITION WORK IN INITIAL BUDGETING. EXISTING CONDENSATE PIPING TO REMAIN ACTIVE UNTIL THE COMPLETION OF PHASE 6. SEE TEMPORARY PIPING SUPPORT DETAIL ON SHEET M-501. INSTALL PIPE SUPPORTS EVERY 12 FT PER MSS SP-58 FOR THE SMALLEST SIZE PIPE IN THE RUN.
5. PROVIDE ANCHOR 5' OUTSIDE OF MANHOLE AND IN LOCATIONS DETERMINED BY PIPE MANUFACTURER. SEE ANCHOR DETAILS ON SHEET M-501.

1 SITE PLAN - MECHANICAL - NEW WORK - PHASE 3
1" = 30'-0"

N 0 15' 30' 60' 90'
1" = 30'

| Revisions | Date |
|---|---|

CONSULTANT

ARCHITECT/ENGINEER OF RECORD
2014-2024 10TH ANNIVERSARY
Above Group
ENGINEERING | DESIGN | CONSULTING
SDVOSB cVE
www.abovegroupinc.com
COA/CA Lic. No. 31120
305 East Dr., Suite H,
Melbourne, Florida 32904
PH: 321.345.9026

STAMP
STATE OF MARYLAND
GEOFFREY S. CHENOWETH
No. 28825
REGISTERED
PROFESSIONAL ENGINEER

Office of Construction and Facilities Management
VA U.S. Department of Veterans Affairs

| | | | |
|---|---|---|---|
| Drawing Title: SITE PLAN - MECHANICAL - NEW WORK - PHASE 3 | Phase: 100% CONSTRUCTION DOCUMENTS | Project Title: STEAM LINE REPLACEMENT | Project Number: 659-24-903 |
| | | | Building Number: |
| Approved: | | Location: SALISBURY VAMC | Drawing Number: MP103 |
| | | Issue Date: 09/27/2024 · Checked: GC · Drawn: DG | |

VA FORM 08 - 6231

Autodesk Docs://0123056 - Salisbury Steam Line Replacement/0123056 - VA Salisbury Stm Line Repl - R23_ME.rvt
9/27/2024 11:10:31 AM

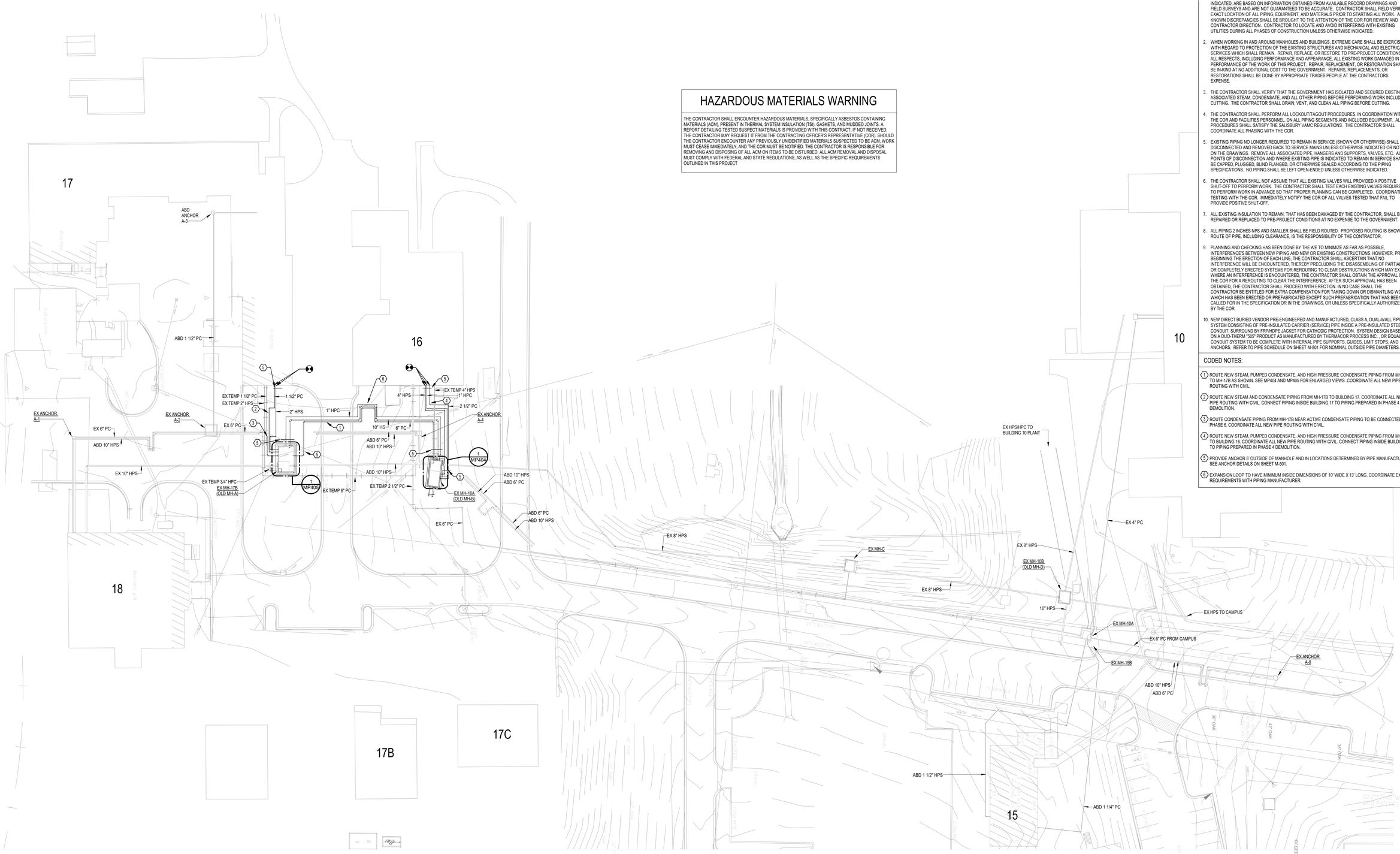


1 SITE PLAN - MECHANICAL - NEW WORK - PHASE 4
1" = 30'-0"

N 0 15' 30' 60' 90'
1" = 30'

## HAZARDOUS MATERIALS WARNING

THE CONTRACTOR SHALL ENCOUNTER HAZARDOUS MATERIALS, SPECIFICALLY ASBESTOS CONTAINING MATERIALS (ACM), PRESENT IN THERMAL SYSTEM INSULATION (TSI), GASKETS, AND MUDDED JOINTS. A REPORT DETAILING TESTED SUSPECT MATERIALS IS PROVIDED WITH THIS CONTRACT, IF NOT RECEIVED, THE CONTRACTOR MAY REQUEST IT FROM THE CONTRACTING OFFICER'S REPRESENTATIVE (COR). SHOULD THE CONTRACTOR ENCOUNTER ANY PREVIOUSLY UNIDENTIFIED MATERIALS SUSPECTED TO BE ACM, WORK MUST CEASE IMMEDIATELY, AND THE COR MUST BE NOTIFIED. THE CONTRACTOR IS RESPONSIBLE FOR REMOVING AND DISPOSING OF ALL ACM ON ITEMS TO BE DISTURBED. ALL ACM REMOVAL AND DISPOSAL MUST COMPLY WITH FEDERAL AND STATE REGULATIONS, AS WELL AS THE SPECIFIC REQUIREMENTS OUTLINED IN THIS PROJECT

## DRAWING NOTES:

1. EXISTING CONDITIONS - I.E. PRESENCE, SIZE, AND LOCATION OF PIPING, EQUIPMENT, AND MATERIALS INDICATED, ARE BASED ON INFORMATION OBTAINED FROM AVAILABLE RECORD DRAWINGS AND FIELD SURVEYS AND ARE NOT GUARANTEED TO BE ACCURATE. CONTRACTOR SHALL FIELD VERIFY EXACT LOCATION OF ALL PIPING, EQUIPMENT, AND MATERIALS PRIOR TO STARTING ALL WORK. ANY KNOWN DISCREPANCIES SHALL BE BROUGHT TO THE ATTENTION OF THE COR FOR REVIEW AND CONTRACTOR DIRECTION. CONTRACTOR TO LOCATE AND AVOID INTERFERING WITH EXISTING UTILITIES DURING ALL PHASES OF CONSTRUCTION UNLESS OTHERWISE INDICATED.
2. WHEN WORKING IN AND AROUND MANHOLES AND BUILDINGS, EXTREME CARE SHALL BE EXERCISED WITH REGARD TO PROTECTION OF THE EXISTING STRUCTURES AND MECHANICAL AND ELECTRICAL SERVICES WHICH SHALL REMAIN. REPAIR, REPLACE, OR RESTORE TO PRE-PROJECT CONDITIONS IN ALL RESPECTS, INCLUDING PERFORMANCE AND APPEARANCE. ALL EXISTING WORK DAMAGED IN THE PERFORMANCE OF THE WORK OF THIS PROJECT. REPAIR, REPLACEMENT, OR RESTORATION SHALL BE IN-KIND AT NO ADDITIONAL COST TO THE GOVERNMENT. REPAIRS, REPLACEMENTS, OR RESTORATIONS SHALL BE DONE BY APPROPRIATE TRADES PEOPLE AT THE CONTRACTORS EXPENSE.
3. THE CONTRACTOR SHALL VERIFY THAT THE GOVERNMENT HAS ISOLATED AND SECURED EXISTING ASSOCIATED STEAM, CONDENSATE, AND ALL OTHER PIPING BEFORE PERFORMING WORK INCLUDING CUTTING. THE CONTRACTOR SHALL DRAIN, VENT, AND CLEAN ALL PIPING BEFORE CUTTING.
4. THE CONTRACTOR SHALL PERFORM ALL LOCKOUT/TAGOUT PROCEDURES, IN COORDINATION WITH THE COR AND FACILITIES PERSONNEL, ON ALL PIPING SEGMENTS AND INCLUDED EQUIPMENT. ALL PROCEDURES SHALL SATISFY THE SALISBURY VAMC REGULATIONS. THE CONTRACTOR SHALL COORDINATE ALL PHASING WITH THE COR.
5. EXISTING PIPING NO LONGER REQUIRED TO REMAIN IN SERVICE (SHOWN OR OTHERWISE) SHALL BE DISCONNECTED AND REMOVED BACK TO SERVICE MAINS UNLESS OTHERWISE INDICATED OR NOTED ON THE DRAWINGS. REMOVE ALL ASSOCIATED PIPE, HANGERS AND SUPPORTS, VALVES, ETC. ALL POINTS OF DISCONNECTION AND WHERE EXISTING PIPE IS INDICATED TO REMAIN IN SERVICE SHALL BE CAPPED, PLUGGED, BLIND FLANGED, OR OTHERWISE SEALED ACCORDING TO THE PIPING SPECIFICATIONS. NO PIPING SHALL BE LEFT OPEN-ENDED UNLESS OTHERWISE INDICATED.
6. THE CONTRACTOR SHALL NOT ASSUME THAT ALL EXISTING VALVES WILL PROVIDED A POSITIVE SHUT-OFF TO PERFORM WORK. THE CONTRACTOR SHALL TEST EACH EXISTING VALVES REQUIRED TO PERFORM WORK IN ADVANCE SO THAT PROPER PLANNING CAN BE COMPLETED. COORDINATE TESTING WITH THE COR. IMMEDIATELY NOTIFY THE COR OF ALL VALVES TESTED THAT FAIL TO PROVIDE POSITIVE SHUT-OFF.
7. ALL EXISTING INSULATION TO REMAIN, THAT HAS BEEN DAMAGED BY THE CONTRACTOR, SHALL BE REPAIRED OR REPLACED TO PRE-PROJECT CONDITIONS AT NO EXPENSE TO THE GOVERNMENT.
8. ALL PIPING 2 INCHES NPS AND SMALLER SHALL BE FIELD ROUTED. PROPOSED ROUTING IS SHOWN. ROUTE OF PIPE, INCLUDING CLEARANCE, IS THE RESPONSIBILITY OF THE CONTRACTOR.
9. PLANNING AND CHECKING HAS BEEN DONE BY THE A/E TO MINIMIZE AS FAR AS POSSIBLE, INTERFERENCE'S BETWEEN NEW PIPING AND NEW OR EXISTING CONSTRUCTIONS. HOWEVER, PRIOR BEGINNING THE ERECTION OF EACH LINE, THE CONTRACTOR SHALL ASCERTAIN THAT NO INTERFERENCE WILL BE ENCOUNTERED, THEREBY PRECLUDING THE DISASSEMBLING OF PARTIALLY OR COMPLETELY ERECTED SYSTEMS FOR REROUTING TO CLEAR OBSTRUCTIONS WHICH MAY EXIST. WHERE AN INTERFERENCE IS ENCOUNTERED, THE CONTRACTOR SHALL OBTAIN THE APPROVAL OF THE COR FOR A REROUTING TO CLEAR THE INTERFERENCE. AFTER SUCH APPROVAL HAS BEEN OBTAINED, THE CONTRACTOR SHALL PROCEED WITH ERECTION. IN NO CASE SHALL THE CONTRACTOR BE ENTITLED FOR EXTRA COMPENSATION FOR TAKING DOWN OR DISMANTLING WORK WHICH HAS BEEN ERECTED OR PREFABRICATED EXCEPT SUCH PREFABRICATION THAT HAS BEEN CALLED FOR IN THE SPECIFICATION OR IN THE DRAWINGS, OR UNLESS SPECIFICALLY AUTHORIZED BY THE COR.
10. NEW DIRECT BURIED VENDOR PRE-ENGINEERED AND MANUFACTURED, CLASS A, DUAL-WALL PIPING SYSTEM CONSISTING OF PRE-INSULATED CARRIER (SERVICE) PIPE INSIDE A PRE-INSULATED STEEL CONDUIT, SURROUND BY FRPHDPE JACKET FOR CATHODIC PROTECTION. SYSTEM DESIGN BASED ON A DUO-THERM "505" PRODUCT AS MANUFACTURED BY THERMACOR PROCESS INC. , OR EQUAL. CONDUIT SYSTEM TO BE COMPLETE WITH INTERNAL PIPE SUPPORTS, GUIDES, LIMIT STOPS, AND ANCHORS. REFER TO PIPE SCHEDULE ON SHEET M-801 FOR NOMINAL OUTSIDE PIPE DIAMETERS.

## CODED NOTES:

1. ROUTE NEW STEAM, PUMPED CONDENSATE, AND HIGH PRESSURE CONDENSATE PIPING FROM MH-16A TO MH-17B AS SHOWN. SEE MP404 AND MP405 FOR ENLARGED VIEWS. COORDINATE ALL NEW PIPE ROUTING WITH CIVIL.
2. ROUTE NEW STEAM AND CONDENSATE PIPING FROM MH-17B TO BUILDING 17. COORDINATE ALL NEW PIPE ROUTING WITH CIVIL. CONNECT PIPING INSIDE BUILDING 17 TO PIPING PREPARED IN PHASE 4 DEMOLITION.
3. ROUTE CONDENSATE PIPING FROM MH-17B NEAR ACTIVE CONDENSATE PIPING TO BE CONNECTED IN PHASE 6. COORDINATE ALL NEW PIPE ROUTING WITH CIVIL.
4. ROUTE NEW STEAM, PUMPED CONDENSATE, AND HIGH PRESSURE CONDENSATE PIPING FROM MH-16A TO BUILDING 16. COORDINATE ALL NEW PIPE ROUTING WITH CIVIL. CONNECT PIPING INSIDE BUILDING 16 TO PIPING PREPARED IN PHASE 4 DEMOLITION.
5. PROVIDE ANCHOR 5' OUTSIDE OF MANHOLE AND IN LOCATIONS DETERMINED BY PIPE MANUFACTURER. SEE ANCHOR DETAILS ON SHEET M-501.
6. EXPANSION LOOP TO HAVE MINIMUM INSIDE DIMENSIONS OF 10' WIDE X 13' LONG. COORDINATE EXACT REQUIREMENTS WITH PIPING MANUFACTURER.

| Revisions | Date |
|---|---|
| | |

CONSULTANT

ARCHITECT/ENGINEER OF RECORD

2014-2024 10TH ANNIVERSARY Above Group ENGINEERING | DESIGN | CONSULTING
SDVOSB
www.abovegroupinc.com
COA/CA Lic. No. 31120
305 East Dr., Suite H, Melbourne, Florida 32904
PH: 321.345.9026

STAMP
STATE OF MARYLAND GEOFFREY S. CHEVALIER No. 28825 REGISTERED PROFESSIONAL ENGINEER

Office of Construction and Facilities Management
VA U.S. Department of Veterans Affairs

| | | | |
|---|---|---|---|
| Drawing Title: SITE PLAN - MECHANICAL - NEW WORK - PHASE 4 | Phase: 100% CONSTRUCTION DOCUMENTS | Project Title: STEAM LINE REPLACEMENT | Project Number: 659-24-903 |
| | | | Building Number: |
| Approved: | | Location: SALISBURY VAMC | Drawing Number: MP104 |
| | | Issue Date: 09/27/2024 · Checked: GC · Drawn: DG | |

VA FORM 08 - 6231

Autodesk Docs://0123056 - Salisbury Steam Line Replacement/0123056 - VA Salisbury Stm Line Repl - R23_ME.rvt
9/27/2024 11:10:34 AM

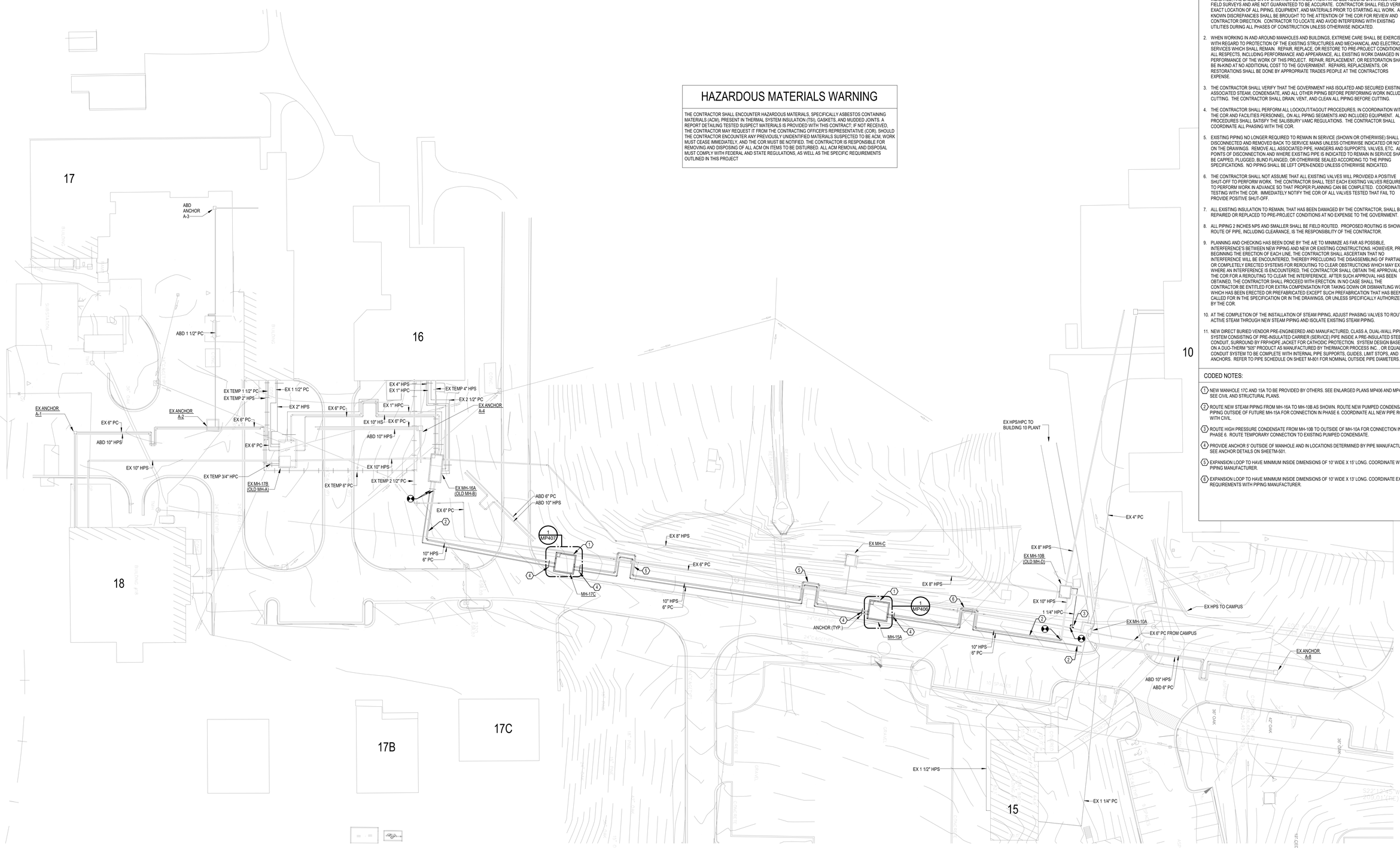


# HAZARDOUS MATERIALS WARNING

THE CONTRACTOR SHALL ENCOUNTER HAZARDOUS MATERIALS, SPECIFICALLY ASBESTOS CONTAINING MATERIALS (ACM), PRESENT IN THERMAL SYSTEM INSULATION (TSI), GASKETS, AND MUDDED JOINTS. A REPORT DETAILING TESTED SUSPECT MATERIALS IS PROVIDED WITH THIS CONTRACT, IF NOT RECEIVED, THE CONTRACTOR MAY REQUEST IT FROM THE CONTRACTING OFFICER'S REPRESENTATIVE (COR). SHOULD THE CONTRACTOR ENCOUNTER ANY PREVIOUSLY UNIDENTIFIED MATERIALS SUSPECTED TO BE ACM, WORK MUST CEASE IMMEDIATELY, AND THE COR MUST BE NOTIFIED. THE CONTRACTOR IS RESPONSIBLE FOR REMOVING AND DISPOSING OF ALL ACM ON ITEMS TO BE DISTURBED. ALL ACM REMOVAL AND DISPOSAL MUST COMPLY WITH FEDERAL AND STATE REGULATIONS, AS WELL AS THE SPECIFIC REQUIREMENTS OUTLINED IN THIS PROJECT

## DRAWING NOTES:

1. EXISTING CONDITIONS - I.E. PRESENCE, SIZE, AND LOCATION OF PIPING, EQUIPMENT, AND MATERIALS INDICATED, ARE BASED ON INFORMATION OBTAINED FROM AVAILABLE RECORD DRAWINGS AND FIELD SURVEYS AND ARE NOT GUARANTEED TO BE ACCURATE. CONTRACTOR SHALL FIELD VERIFY EXACT LOCATION OF ALL PIPING, EQUIPMENT, AND MATERIALS PRIOR TO STARTING ALL WORK. ANY KNOWN DISCREPANCIES SHALL BE BROUGHT TO THE ATTENTION OF THE COR FOR REVIEW AND CONTRACTOR DIRECTION. CONTRACTOR TO LOCATE AND AVOID INTERFERING WITH EXISTING UTILITIES DURING ALL PHASES OF CONSTRUCTION UNLESS OTHERWISE INDICATED.
2. WHEN WORKING IN AND AROUND MANHOLES AND BUILDINGS, EXTREME CARE SHALL BE EXERCISED WITH REGARD TO PROTECTION OF THE EXISTING STRUCTURES AND MECHANICAL AND ELECTRICAL SERVICES WHICH SHALL REMAIN. REPAIR, REPLACE, OR RESTORE TO PRE-PROJECT CONDITIONS IN ALL RESPECTS, INCLUDING PERFORMANCE AND APPEARANCE. ALL EXISTING WORK DAMAGED IN THE PERFORMANCE OF THE WORK OF THIS PROJECT. REPAIR, REPLACEMENT, OR RESTORATION SHALL BE IN-KIND AT NO ADDITIONAL COST TO THE GOVERNMENT. REPAIRS, REPLACEMENTS, OR RESTORATIONS SHALL BE DONE BY APPROPRIATE TRADES PEOPLE AT THE CONTRACTORS EXPENSE.
3. THE CONTRACTOR SHALL VERIFY THAT THE GOVERNMENT HAS ISOLATED AND SECURED EXISTING ASSOCIATED STEAM, CONDENSATE, AND ALL OTHER PIPING BEFORE PERFORMING WORK INCLUDING CUTTING. THE CONTRACTOR SHALL DRAIN, VENT, AND CLEAN ALL PIPING BEFORE CUTTING.
4. THE CONTRACTOR SHALL PERFORM ALL LOCKOUT/TAGOUT PROCEDURES, IN COORDINATION WITH THE COR AND FACILITIES PERSONNEL, ON ALL PIPING SEGMENTS AND INCLUDED EQUIPMENT. ALL PROCEDURES SHALL SATISFY THE SALISBURY VAMC REGULATIONS. THE CONTRACTOR SHALL COORDINATE ALL PHASING WITH THE COR.
5. EXISTING PIPING NO LONGER REQUIRED TO REMAIN IN SERVICE (SHOWN OR OTHERWISE) SHALL BE DISCONNECTED AND REMOVED BACK TO SERVICE MAINS UNLESS OTHERWISE INDICATED OR NOTED ON THE DRAWINGS. REMOVE ALL ASSOCIATED PIPE, HANGERS AND SUPPORTS, VALVES, ETC. ALL POINTS OF DISCONNECTION AND WHERE EXISTING PIPE IS INDICATED TO REMAIN IN SERVICE SHALL BE CAPPED, PLUGGED, BLIND FLANGED, OR OTHERWISE SEALED ACCORDING TO THE PIPING SPECIFICATIONS. NO PIPING SHALL BE LEFT OPEN-ENDED UNLESS OTHERWISE INDICATED.
6. THE CONTRACTOR SHALL NOT ASSUME THAT ALL EXISTING VALVES WILL PROVIDED A POSITIVE SHUT-OFF TO PERFORM WORK. THE CONTRACTOR SHALL TEST EACH EXISTING VALVES REQUIRED TO PERFORM WORK IN ADVANCE SO THAT PROPER PLANNING CAN BE COMPLETED. COORDINATE TESTING WITH THE COR. IMMEDIATELY NOTIFY THE COR OF ALL VALVES TESTED THAT FAIL TO PROVIDE POSITIVE SHUT-OFF.
7. ALL EXISTING INSULATION TO REMAIN, THAT HAS BEEN DAMAGED BY THE CONTRACTOR, SHALL BE REPAIRED OR REPLACED TO PRE-PROJECT CONDITIONS AT NO EXPENSE TO THE GOVERNMENT.
8. ALL PIPING 2 INCHES NPS AND SMALLER SHALL BE FIELD ROUTED. PROPOSED ROUTING IS SHOWN. ROUTE OF PIPE, INCLUDING CLEARANCE, IS THE RESPONSIBILITY OF THE CONTRACTOR.
9. PLANNING AND CHECKING HAS BEEN DONE BY THE A/E TO MINIMIZE AS FAR AS POSSIBLE, INTERFERENCE'S BETWEEN NEW PIPING AND NEW OR EXISTING CONSTRUCTIONS. HOWEVER, PRIOR BEGINNING THE ERECTION OF EACH LINE, THE CONTRACTOR SHALL ASCERTAIN THAT NO INTERFERENCE WILL BE ENCOUNTERED, THEREBY PRECLUDING THE DISASSEMBLING OF PARTIALLY OR COMPLETELY ERECTED SYSTEMS FOR REROUTING TO CLEAR OBSTRUCTIONS WHICH MAY EXIST. WHERE AN INTERFERENCE IS ENCOUNTERED, THE CONTRACTOR SHALL OBTAIN THE APPROVAL OF THE COR FOR A REROUTING TO CLEAR THE INTERFERENCE. AFTER SUCH APPROVAL HAS BEEN OBTAINED, THE CONTRACTOR SHALL PROCEED WITH ERECTION. IN NO CASE SHALL THE CONTRACTOR BE ENTITLED FOR EXTRA COMPENSATION FOR TAKING DOWN OR DISMANTLING WORK WHICH HAS BEEN ERECTED OR PREFABRICATED EXCEPT SUCH PREFABRICATION THAT HAS BEEN CALLED FOR IN THE SPECIFICATION OR IN THE DRAWINGS, OR UNLESS SPECIFICALLY AUTHORIZED BY THE COR.
10. AT THE COMPLETION OF THE INSTALLATION OF STEAM PIPING, ADJUST PHASING VALVES TO ROUTE ACTIVE STEAM THROUGH NEW STEAM PIPING AND ISOLATE EXISTING STEAM PIPING.
11. NEW DIRECT BURIED VENDOR PRE-ENGINEERED AND MANUFACTURED, CLASS A, DUAL-WALL PIPING SYSTEM CONSISTING OF PRE-INSULATED CARRIER (SERVICE) PIPE INSIDE A PRE-INSULATED STEEL CONDUIT, SURROUND BY FRPHDPE JACKET FOR CATHODIC PROTECTION. SYSTEM DESIGN BASED ON A DUO-THERM "505" PRODUCT AS MANUFACTURED BY THERMACOR PROCESS INC. , OR EQUAL. CONDUIT SYSTEM TO BE COMPLETE WITH INTERNAL PIPE SUPPORTS, GUIDES, LIMIT STOPS, AND ANCHORS. REFER TO PIPE SCHEDULE ON SHEET M-801 FOR NOMINAL OUTSIDE PIPE DIAMETERS.

## CODED NOTES:

1. NEW MANHOLE 17C AND 15A TO BE PROVIDED BY OTHERS. SEE ENLARGED PLANS MP406 AND MP407. SEE CIVIL AND STRUCTURAL PLANS.
2. ROUTE NEW STEAM PIPING FROM MH-16A TO MH-10B AS SHOWN. ROUTE NEW PUMPED CONDENSATE PIPING OUTSIDE OF FUTURE MH-15A FOR CONNECTION IN PHASE 6. COORDINATE ALL NEW PIPE ROUTING WITH CIVIL.
3. ROUTE HIGH PRESSURE CONDENSATE FROM MH-10B TO OUTSIDE OF MH-10A FOR CONNECTION IN PHASE 6. ROUTE TEMPORARY CONNECTION TO EXISTING PUMPED CONDENSATE.
4. PROVIDE ANCHOR 5' OUTSIDE OF MANHOLE AND IN LOCATIONS DETERMINED BY PIPE MANUFACTURER. SEE ANCHOR DETAILS ON SHEETM-501.
5. EXPANSION LOOP TO HAVE MINIMUM INSIDE DIMENSIONS OF 10' WIDE X 15' LONG. COORDINATE WITH PIPING MANUFACTURER.
6. EXPANSION LOOP TO HAVE MINIMUM INSIDE DIMENSIONS OF 10' WIDE X 13' LONG. COORDINATE EXACT REQUIREMENTS WITH PIPING MANUFACTURER.

1 SITE PLAN - MECHANICAL - NEW WORK - PHASE 5
1" = 30'-0"

N 0 15' 30' 60' 90'
1" = 30'

| Revisions | Date |
|---|---|
| | |

CONSULTANT

ARCHITECT/ENGINEER OF RECORD

2014-2024 10TH ANNIVERSARY
Above Group
ENGINEERING | DESIGN | CONSULTING
SDVOSB
www.abovegroupinc.com
COA/CA Lic. No. 31120
305 East Dr., Suite H,
Melbourne, Florida 32904
PH: 321.345.9026

STAMP

STATE OF MARYLAND
GEOFFREY S. GNEHM
No. 39853
REGISTERED PROFESSIONAL ENGINEER

Office of Construction and Facilities Management

VA U.S. Department of Veterans Affairs

| | | | |
|---|---|---|---|
| Drawing Title: SITE PLAN - MECHANICAL - NEW WORK - PHASE 5 | Phase: 100% CONSTRUCTION DOCUMENTS | Project Title: STEAM LINE REPLACEMENT | Project Number: 659-24-903 |
| | | | Building Number: |
| Approved: | | Location: SALISBURY VAMC | Drawing Number: MP105 |
| | | Issue Date: 09/27/2024 · Checked: GC · Drawn: DG | |

VA FORM 08 - 6231

Autodesk Docs://9123056 - Salisbury Steam Line Replacement/9123056 - VA Salisbury Stm Line Repl - R23_ME.rvt
9/27/2024 11:10:37 AM

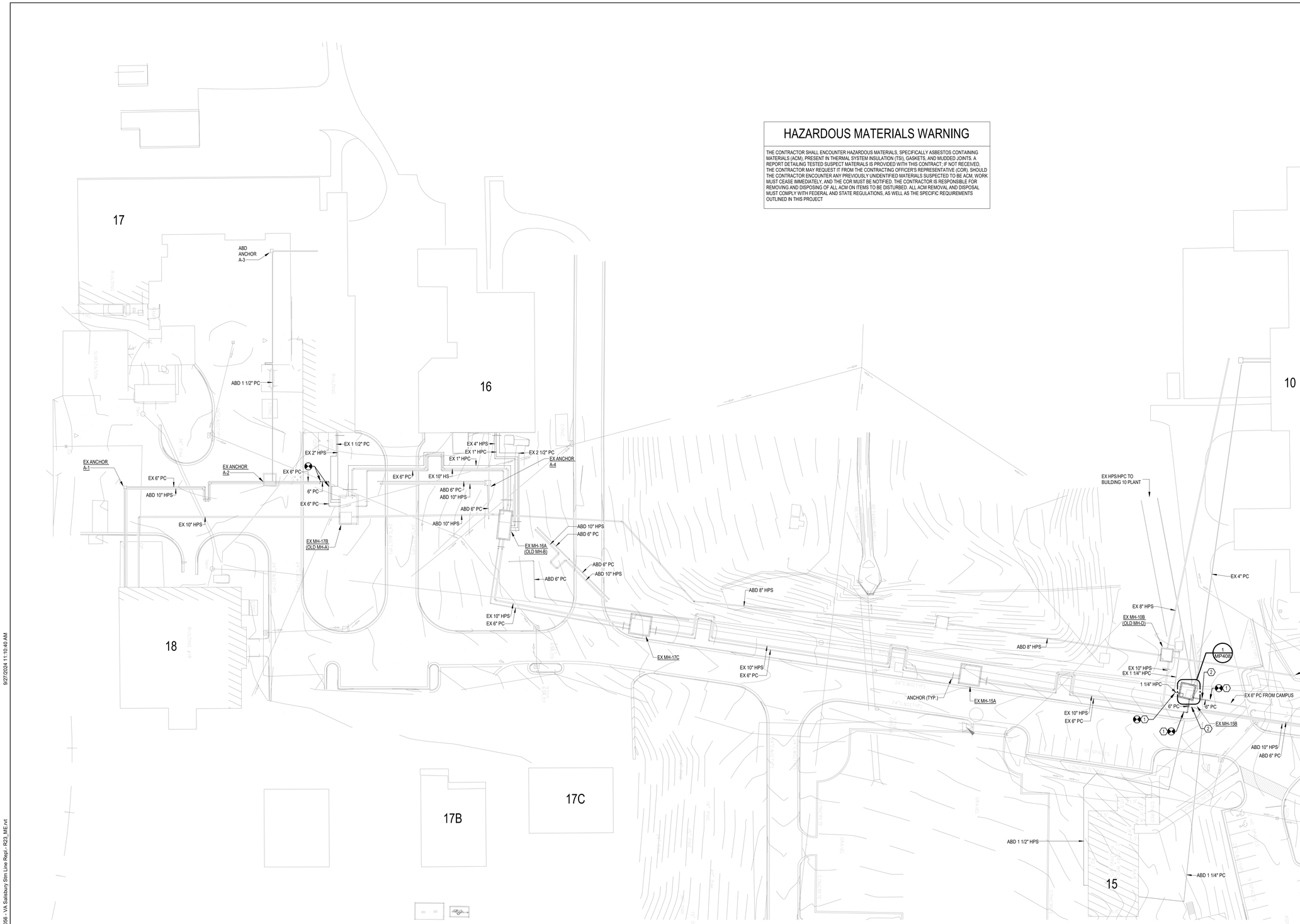


## HAZARDOUS MATERIALS WARNING

THE CONTRACTOR SHALL ENCOUNTER HAZARDOUS MATERIALS, SPECIFICALLY ASBESTOS CONTAINING MATERIALS (ACM), PRESENT IN THERMAL SYSTEM INSULATION (TSI), GASKETS, AND MUDDED JOINTS. A REPORT DETAILING TESTED SUSPECT MATERIALS IS PROVIDED WITH THIS CONTRACT; IF NOT RECEIVED, THE CONTRACTOR MAY REQUEST IT FROM THE CONTRACTING OFFICER'S REPRESENTATIVE (COR). SHOULD THE CONTRACTOR ENCOUNTER ANY PREVIOUSLY UNIDENTIFIED MATERIALS SUSPECTED TO BE ACM, WORK MUST CEASE IMMEDIATELY, AND THE COR MUST BE NOTIFIED. THE CONTRACTOR IS RESPONSIBLE FOR REMOVING AND DISPOSING OF ALL ACM ON ITEMS TO BE DISTURBED. ALL ACM REMOVAL AND DISPOSAL MUST COMPLY WITH FEDERAL AND STATE REGULATIONS, AS WELL AS THE SPECIFIC REQUIREMENTS OUTLINED IN THIS PROJECT

## DRAWING NOTES:

1. EXISTING CONDITIONS - I.E. PRESENCE, SIZE, AND LOCATION OF PIPING, EQUIPMENT, AND MATERIALS INDICATED, ARE BASED ON INFORMATION OBTAINED FROM AVAILABLE RECORD DRAWINGS AND FIELD SURVEYS AND ARE NOT GUARANTEED TO BE ACCURATE. CONTRACTOR SHALL FIELD VERIFY EXACT LOCATION OF ALL PIPING, EQUIPMENT, AND MATERIALS PRIOR TO STARTING ALL WORK. ANY KNOWN DISCREPANCIES SHALL BE BROUGHT TO THE ATTENTION OF THE COR FOR REVIEW AND CONTRACTOR DIRECTION. CONTRACTOR TO LOCATE AND AVOID INTERFERING WITH EXISTING UTILITIES DURING ALL PHASES OF CONSTRUCTION UNLESS OTHERWISE INDICATED.
2. WHEN WORKING IN AND AROUND MANHOLES AND BUILDINGS, EXTREME CARE SHALL BE EXERCISED WITH REGARD TO PROTECTION OF THE EXISTING STRUCTURES AND MECHANICAL AND ELECTRICAL SERVICES WHICH SHALL REMAIN. REPAIR, REPLACE, OR RESTORE TO PRE-PROJECT CONDITIONS IN ALL RESPECTS, INCLUDING PERFORMANCE AND APPEARANCE. ALL EXISTING WORK DAMAGED IN THE PERFORMANCE OF THE WORK OF THIS PROJECT. REPAIR, REPLACEMENT, OR RESTORATION SHALL BE IN-KIND AT NO ADDITIONAL COST TO THE GOVERNMENT. REPAIRS, REPLACEMENTS, OR RESTORATIONS SHALL BE DONE BY APPROPRIATE TRADES PEOPLE AT THE CONTRACTORS EXPENSE.
3. THE CONTRACTOR SHALL VERIFY THAT THE GOVERNMENT HAS ISOLATED AND SECURED EXISTING ASSOCIATED STEAM, CONDENSATE, AND ALL OTHER PIPING BEFORE PERFORMING WORK INCLUDING CUTTING. THE CONTRACTOR SHALL DRAIN, VENT, AND CLEAN ALL PIPING BEFORE CUTTING.
4. THE CONTRACTOR SHALL PERFORM ALL LOCKOUT/TAGOUT PROCEDURES, IN COORDINATION WITH THE COR AND FACILITIES PERSONNEL, ON ALL PIPING SEGMENTS AND INCLUDED EQUIPMENT. ALL PROCEDURES SHALL SATISFY THE SALISBURY VAMC REGULATIONS. THE CONTRACTOR SHALL COORDINATE ALL PHASING WITH THE COR.
5. EXISTING PIPING NO LONGER REQUIRED TO REMAIN IN SERVICE (SHOWN OR OTHERWISE) SHALL BE DISCONNECTED AND REMOVED BACK TO SERVICE MAINS UNLESS OTHERWISE INDICATED OR NOTED ON THE DRAWINGS. REMOVE ALL ASSOCIATED PIPE, HANGERS AND SUPPORTS, VALVES, ETC. ALL POINTS OF DISCONNECTION AND WHERE EXISTING PIPE IS INDICATED TO REMAIN IN SERVICE SHALL BE CAPPED, PLUGGED, BLIND FLANGED, OR OTHERWISE SEALED ACCORDING TO THE PIPING SPECIFICATIONS. NO PIPING SHALL BE LEFT OPEN-ENDED UNLESS OTHERWISE INDICATED.
6. THE CONTRACTOR SHALL NOT ASSUME THAT ALL EXISTING VALVES WILL PROVIDED A POSITIVE SHUT-OFF TO PERFORM WORK. THE CONTRACTOR SHALL TEST EACH EXISTING VALVES REQUIRED TO PERFORM WORK IN ADVANCE SO THAT PROPER PLANNING CAN BE COMPLETED. COORDINATE TESTING WITH THE COR. IMMEDIATELY NOTIFY THE COR OF ALL VALVES TESTED THAT FAIL TO PROVIDE POSITIVE SHUT-OFF.
7. ALL EXISTING INSULATION TO REMAIN, THAT HAS BEEN DAMAGED BY THE CONTRACTOR, SHALL BE REPAIRED OR REPLACED TO PRE-PROJECT CONDITIONS AT NO EXPENSE TO THE GOVERNMENT.
8. ALL PIPING 2 INCHES NPS AND SMALLER SHALL BE FIELD ROUTED. PROPOSED ROUTING IS SHOWN. ROUTE OF PIPE, INCLUDING CLEARANCE, IS THE RESPONSIBILITY OF THE CONTRACTOR.
9. PLANNING AND CHECKING HAS BEEN DONE BY THE A/E TO MINIMIZE AS FAR AS POSSIBLE INTERFERENCE'S BETWEEN NEW PIPING AND NEW OR EXISTING CONSTRUCTIONS. HOWEVER, PRIOR BEGINNING THE ERECTION OF EACH LINE, THE CONTRACTOR SHALL ASCERTAIN THAT NO INTERFERENCE WILL BE ENCOUNTERED, THEREBY PRECLUDING THE DISASSEMBLING OF PARTIALLY OR COMPLETELY ERECTED SYSTEMS FOR REROUTING TO CLEAR OBSTRUCTIONS WHICH MAY EXIST. WHERE AN INTERFERENCE IS ENCOUNTERED, THE CONTRACTOR SHALL OBTAIN THE APPROVAL OF THE COR FOR A REROUTING TO CLEAR THE INTERFERENCE. AFTER SUCH APPROVAL HAS BEEN OBTAINED, THE CONTRACTOR SHALL PROCEED WITH ERECTION. IN NO CASE SHALL THE CONTRACTOR BE ENTITLED FOR EXTRA COMPENSATION FOR TAKING DOWN OR DISMANTLING WORK WHICH HAS BEEN ERECTED OR PREFABRICATED EXCEPT SUCH PREFABRICATION THAT HAS BEEN CALLED FOR IN THE SPECIFICATION OR IN THE DRAWINGS, OR UNLESS SPECIFICALLY AUTHORIZED BY THE COR.
10. NEW DIRECT BURIED VENDOR PRE-ENGINEERED AND MANUFACTURED, CLASS A, DUAL-WALL PIPING SYSTEM CONSISTING OF PRE-INSULATED CARRIER (SERVICE) PIPE INSIDE A PRE-INSULATED STEEL CONDUIT, SURROUND BY FRP/HDPE JACKET FOR CATHODIC PROTECTION. SYSTEM DESIGN BASED ON A DUO-THERM "505" PRODUCT AS MANUFACTURED BY THERMACOR PROCESS INC. , OR EQUAL. CONDUIT SYSTEM TO BE COMPLETE WITH INTERNAL PIPE SUPPORTS, GUIDES, LIMIT STOPS, AND ANCHORS. REFER TO PIPE SCHEDULE ON SHEET M-801 FOR NOMINAL OUTSIDE PIPE DIAMETERS.

## CODED NOTES:

1. ROUTE NEW CONDENSATE PIPING FROM MANHOLE 15B PIPING PREPARED IN PREVIOUS PHASE. TIE CONDENSATE PIPING TO EXISTING CONDENSATE IN MANHOLE 10B. SEE ENLARGED VIEWS FOR DETAILS. COORDINATE ALL NEW PIPE ROUTING WITH CIVIL.
2. PROVIDE ANCHOR 5' OUTSIDE OF MANHOLE AND IN LOCATIONS DETERMINED BY PIPE MANUFACTURER. SEE ANCHOR DETAILS ON SHEETM-501.

1 SITE PLAN - MECHANICAL - NEW WORK - PHASE 6
1" = 30'-0"

N 0 15' 30' 60' 90'
1" = 30'

| Revisions | Date |
|---|---|
| | |

CONSULTANT

ARCHITECT/ENGINEER OF RECORD

2014-2024 10TH ANNIVERSARY Above Group
ENGINEERING | DESIGN | CONSULTING
SDVOSB cVE
www.abovegroupinc.com
COA/CA Lic. No. 31120
305 East Dr., Suite H,
Melbourne, Florida 32904
PH: 321.345.9026

STAMP

STATE OF MARYLAND GEOFFREY S. CHENOWETH REGISTERED PROFESSIONAL ENGINEER

Office of Construction and Facilities Management

VA U.S. Department of Veterans Affairs

| | | | |
|---|---|---|---|
| Drawing Title: SITE PLAN - MECHANICAL - NEW WORK - PHASE 6 | Phase: 100% CONSTRUCTION DOCUMENTS | Project Title: STEAM LINE REPLACEMENT | Project Number: 659-24-903 |
| | | | Building Number: |
| Approved: | | Location: SALISBURY VAMC | Drawing Number: MP106 |
| | | Issue Date: 09/27/2024 · Checked: GC · Drawn: DG | |

VA FORM 08 - 6231

Autodesk Docs://0123056 - Salisbury Steam Line Replacement/0123056 - VA Salisbury Stm Line Repl - R23_ME.rvt
9/27/2024 11:10:40 AM

## HAZARDOUS MATERIALS WARNING

THE CONTRACTOR SHALL ENCOUNTER HAZARDOUS MATERIALS, SPECIFICALLY ASBESTOS CONTAINING MATERIALS (ACM), PRESENT IN THERMAL SYSTEM INSULATION (TSI), GASKETS, AND MUDDED JOINTS. A REPORT DETAILING TESTED SUSPECT MATERIALS IS PROVIDED WITH THIS CONTRACT; IF NOT RECEIVED, THE CONTRACTOR MAY REQUEST IT FROM THE CONTRACTING OFFICER'S REPRESENTATIVE (COR). SHOULD THE CONTRACTOR ENCOUNTER ANY PREVIOUSLY UNIDENTIFIED MATERIALS SUSPECTED TO BE ACM, WORK MUST CEASE IMMEDIATELY, AND THE COR MUST BE NOTIFIED. THE CONTRACTOR IS RESPONSIBLE FOR REMOVING AND DISPOSING OF ALL ACM ON ITEMS TO BE DISTURBED. ALL ACM REMOVAL AND DISPOSAL MUST COMPLY WITH FEDERAL AND STATE REGULATIONS, AS WELL AS THE SPECIFIC REQUIREMENTS OUTLINED IN THIS PROJECT

## DRAWING NOTES:

1. EXISTING CONDITIONS - I.E. PRESENCE, SIZE, AND LOCATION OF PIPING, EQUIPMENT, AND MATERIALS INDICATED, ARE BASED ON INFORMATION OBTAINED FROM AVAILABLE RECORD DRAWINGS AND FIELD SURVEYS AND ARE NOT GUARANTEED TO BE ACCURATE. CONTRACTOR SHALL FIELD VERIFY EXACT LOCATION OF ALL PIPING, EQUIPMENT, AND MATERIALS PRIOR TO STARTING ALL WORK. ANY KNOWN DISCREPANCIES SHALL BE BROUGHT TO THE ATTENTION OF THE COR FOR REVIEW AND CONTRACTOR DIRECTION. CONTRACTOR TO LOCATE AND AVOID INTERFERING WITH EXISTING UTILITIES DURING ALL PHASES OF CONSTRUCTION UNLESS OTHERWISE INDICATED.
2. WHEN WORKING IN AND AROUND MANHOLES AND BUILDINGS, EXTREME CARE SHALL BE EXERCISED WITH REGARD TO PROTECTION OF THE EXISTING STRUCTURES AND MECHANICAL AND ELECTRICAL SERVICES WHICH SHALL REMAIN. REPAIR, REPLACE, OR RESTORE TO PRE-PROJECT CONDITIONS IN ALL RESPECTS, INCLUDING PERFORMANCE AND APPEARANCE. ALL EXISTING WORK DAMAGED IN THE PERFORMANCE OF THE WORK OF THIS PROJECT. REPAIR, REPLACEMENT, OR RESTORATION SHALL BE IN-KIND AT NO ADDITIONAL COST TO THE GOVERNMENT. REPAIRS, REPLACEMENTS, OR RESTORATIONS SHALL BE DONE BY APPROPRIATE TRADES PEOPLE AT THE CONTRACTORS EXPENSE.
3. THE CONTRACTOR SHALL VERIFY THAT THE GOVERNMENT HAS ISOLATED AND SECURED EXISTING ASSOCIATED STEAM, CONDENSATE, AND ALL OTHER PIPING BEFORE PERFORMING WORK INCLUDING CUTTING. THE CONTRACTOR SHALL DRAIN, VENT, AND CLEAN ALL PIPING BEFORE CUTTING.
4. THE CONTRACTOR SHALL PERFORM ALL LOCKOUT/TAGOUT PROCEDURES, IN COORDINATION WITH THE COR AND FACILITIES PERSONNEL, ON ALL PIPING SEGMENTS AND INCLUDED EQUIPMENT. ALL PROCEDURES SHALL SATISFY THE SALISBURY VAMC REGULATIONS. THE CONTRACTOR SHALL COORDINATE ALL PHASING WITH THE COR.
5. EXISTING PIPING NO LONGER REQUIRED TO REMAIN IN SERVICE (SHOWN OR OTHERWISE) SHALL BE DISCONNECTED AND REMOVED BACK TO SERVICE MAINS UNLESS OTHERWISE INDICATED OR NOTED ON THE DRAWINGS. REMOVE ALL ASSOCIATED PIPE, HANGERS AND SUPPORTS, VALVES, ETC. ALL POINTS OF DISCONNECTION AND WHERE EXISTING PIPE IS INDICATED TO REMAIN IN SERVICE SHALL BE CAPPED, PLUGGED, BLIND FLANGED, OR OTHERWISE SEALED ACCORDING TO THE PIPING SPECIFICATIONS. NO PIPING SHALL BE LEFT OPEN-ENDED UNLESS OTHERWISE INDICATED.
6. THE CONTRACTOR SHALL NOT ASSUME THAT ALL EXISTING VALVES WILL PROVIDED A POSITIVE SHUT-OFF TO PERFORM WORK. THE CONTRACTOR SHALL TEST EACH EXISTING VALVES REQUIRED TO PERFORM WORK IN ADVANCE SO THAT PROPER PLANNING CAN BE COMPLETED. COORDINATE TESTING WITH THE COR. IMMEDIATELY NOTIFY THE COR OF ALL VALVES TESTED THAT FAIL TO PROVIDE POSITIVE SHUT-OFF.
7. ALL EXISTING INSULATION TO REMAIN, THAT HAS BEEN DAMAGED BY THE CONTRACTOR, SHALL BE REPAIRED OR REPLACED TO PRE-PROJECT CONDITIONS AT NO EXPENSE TO THE GOVERNMENT.
8. ALL PIPING 2 INCHES NPS AND SMALLER SHALL BE FIELD ROUTED. PROPOSED ROUTING IS SHOWN. ROUTE OF PIPE, INCLUDING CLEARANCE, IS THE RESPONSIBILITY OF THE CONTRACTOR.
9. PLANNING AND CHECKING HAS BEEN DONE BY THE A/E TO MINIMIZE AS FAR AS POSSIBLE INTERFERENCE'S BETWEEN NEW PIPING AND NEW OR EXISTING CONSTRUCTIONS. HOWEVER, PRIOR BEGINNING THE ERECTION OF EACH LINE, THE CONTRACTOR SHALL ASCERTAIN THAT NO INTERFERENCE WILL BE ENCOUNTERED, THEREBY PRECLUDING THE DISASSEMBLING OF PARTIALLY OR COMPLETELY ERECTED SYSTEMS FOR REROUTING TO CLEAR OBSTRUCTIONS WHICH MAY EXIST. WHERE AN INTERFERENCE IS ENCOUNTERED, THE CONTRACTOR SHALL OBTAIN THE APPROVAL OF THE COR FOR A REROUTING TO CLEAR THE INTERFERENCE. AFTER SUCH APPROVAL HAS BEEN OBTAINED, THE CONTRACTOR SHALL PROCEED WITH ERECTION. IN NO CASE SHALL THE CONTRACTOR BE ENTITLED FOR EXTRA COMPENSATION FOR TAKING DOWN OR DISMANTLING WORK WHICH HAS BEEN ERECTED OR PREFABRCATED EXCEPT SUCH PREFABRICATION THAT HAS BEEN CALLED FOR IN THE SPECIFICATION OR IN THE DRAWINGS, OR UNLESS SPECIFICALLY AUTHORIZED BY THE COR.

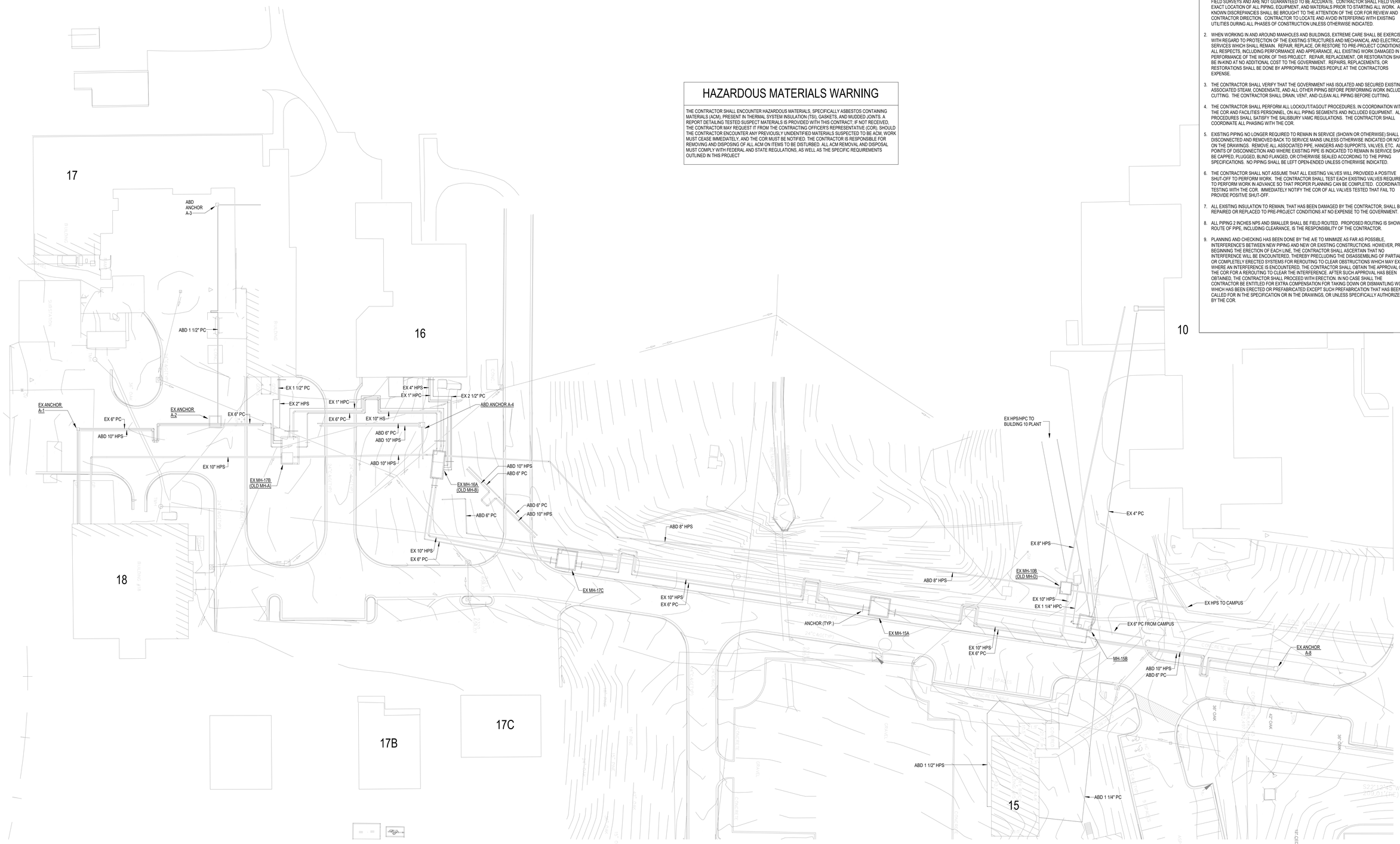


1 SITE PLAN - MECHANICAL - NEW WORK - PHASE 7
1" = 30'-0"

N 0 15' 30' 60' 90'
1" = 30'

| | | | |
|---|---|---|---|
| CONSULTANT | ARCHITECT/ENGINEER OF RECORD<br>2014-2024 10TH ANNIVERSARY Above Group ENGINEERING \| DESIGN \| CONSULTING<br>www.abovegroupinc.com COA/CA Lic. No. 31120<br>305 East Dr., Suite H, Melbourne, Florida 32904 PH: 321.345.9026 | STAMP<br>STATE OF MARYLAND GEOFFREY S. CHEADOFF NO. 28825 REGISTERED PROFESSIONAL ENGINEER | Office of Construction and Facilities Management<br>VA U.S. Department of Veterans Affairs |

| | | | |
|---|---|---|---|
| Drawing Title: SITE PLAN - MECHANICAL - NEW WORK - PHASE 7 | Phase: 100% CONSTRUCTION DOCUMENTS | Project Title: STEAM LINE REPLACEMENT | Project Number: 659-24-903 |
| Approved: | | | Building Number: |
| | | Location: SALISBURY VAMC | Drawing Number: MP107 |
| | | Issue Date: 09/27/2024 · Checked: GC · Drawn: DG | |

Revisions | Date

VA FORM 08 - 6231

Autodesk Docs://0123056 - Salisbury Steam Line Replacement/0123056 - VA Salisbury Stm Line Repl - R23_ME.rvt 9/27/2024 11:10:43 AM

DRAWING NOTES:

1. CONTRACTOR TO FIELD-VERIFY EXISTING CONDITIONS AND BRING ANY KNOWN DISCREPANCIES TO THE ATTENTION OF THE COR FOR REVIEW AND CONTRACT RESOLUTION.

CODED NOTES:

1. EXISTING STEAM PIPING TO BE DISCONNECTED FROM SYSTEM AND REMOVED OUTSIDE OF MANHOLE. SITE PIPING TO BE REMOVED AS PART OF PHASE 6.
2. DISCONNECT STEAM AND CONDENSATE PIPING FROM PIPING SERVING BACKUP PIPING FOR VETERANS HOME. ENSURE PIPING AND CONDENSATE PIPING IS ISOLATED AT VERERANS HOME CEP PRIOR TO PERFORMING WORK. SEE MP401 FOR NEW PIPE CONNECTIONS.

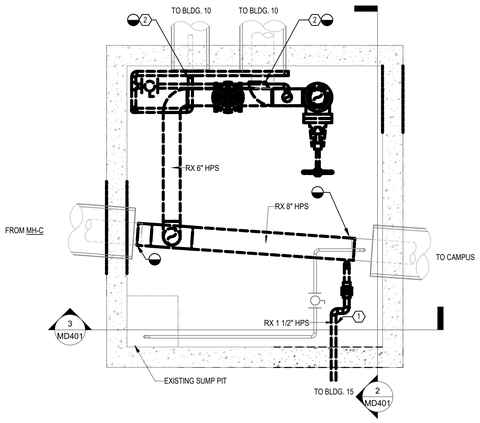


1 ENLARGED PLAN - MECHANICAL - DEMOLITION - MH-10B - PH 3
1/2" = 1'-0"

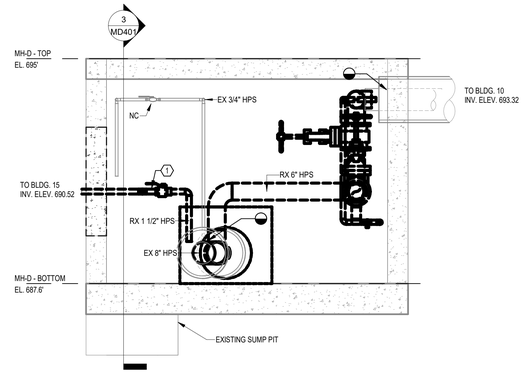


2 SECTION B - MECHANICAL - DEMOLITION - MH-10B - PH 3
1/2" = 1'-0"

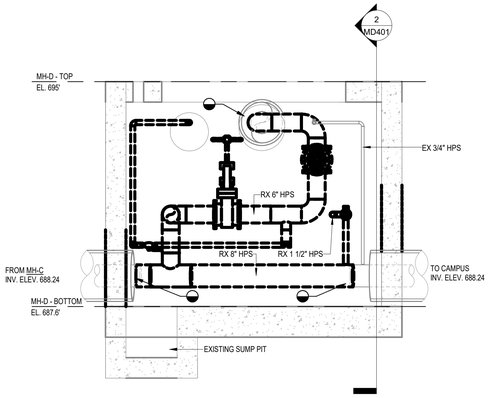


3 SECTION A - MECHANICAL - DEMOLITION - MH-10B - PH 3
1/2" = 1'-0"

4 EXISTING CONDITIONS - MH-D - PH 3
N.T.S.

N 0 1' 2' 4' 6'
1/2" = 1'-0"

| CONSULTANT | ARCHITECT/ENGINEER OF RECORD | STAMP | Office of Construction and Facilities Management | Drawing Title | Phase | Project Title | Project Number |
|---|---|---|---|---|---|---|---|
| | 2014-2024 10TH ANNIVERSARY Above Group ENGINEERING \| DESIGN \| CONSULTING www.abovegroupinc.com COA/CA Lic. No. 31120 305 East Dr., Suite H, Melbourne, Florida 32904 PH: 321.345.9026 SDVOSB | STATE OF MARYLAND GEOFFREY S. CHENOWETH No. 29825 REGISTERED PROFESSIONAL ENGINEER | VA U.S. Department of Veterans Affairs | MH-10B - MECH PLANS AND SECTIONS - DEMOLITION - PHASE 3 | 100% CONSTRUCTION DOCUMENTS | STEAM LINE REPLACEMENT | 659-24-903 |
| | | | | Approved: | | Location: SALISBURY VAMC | Building Number |
| | | | | | | Issue Date: 09/27/2024 · Checked: GC · Drawn: DG | Drawing Number: MD401 |

Revisions | Date

VA FORM 08 - 6231

Autodesk Docs://012306S - Salisbury Steam Line Replacement/012306S - VA Salisbury Stm Line Repl - R23_ME.rvt
9/27/2024 11:10:44 AM

DRAWING NOTES:

1. CONTRACTOR TO FIELD-VERIFY EXISTING CONDITIONS AND BRING ANY KNOWN DISCREPANCIES TO THE ATTENTION OF THE COR FOR REVIEW AND CONTRACT RESOLUTION.

CODED NOTES:

1. REMOVE EXISTING STEAM PIPING 5' OUTSIDE OF MANHOLE FOR FURTHER REMOVAL IN A FUTURE PHASE. SEE SITE PLAN FOR CONTINUATION.
2. DISCONNECT AND REMOVE EXISTING STEAM PIPING FOR INSTALLATION OF HEADER IN NEW WORK PHASE.

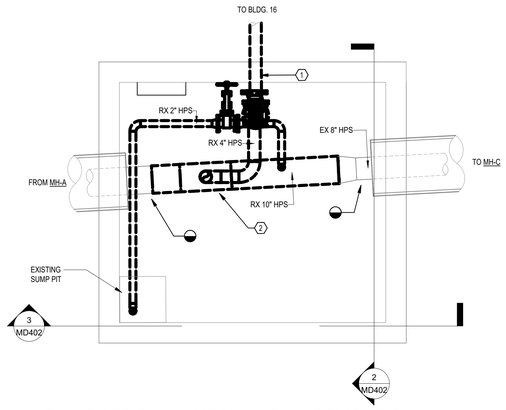


1 ENLARGED PLAN - MECHANICAL - DEMOLITION - MH-16A - PH 3
1/2" = 1'-0"

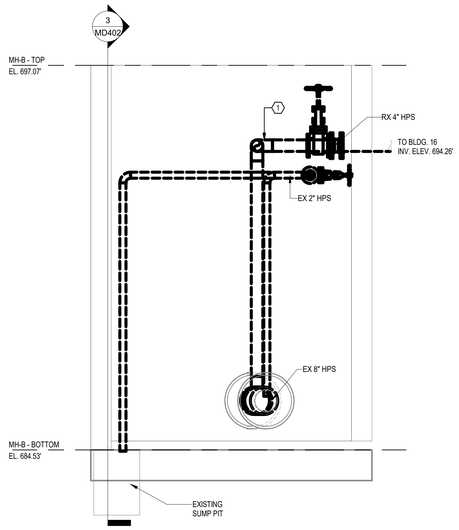


2 SECTION B - MECHANICAL - DEMOLITION - MH-16A - PH 3
1/2" = 1'-0"

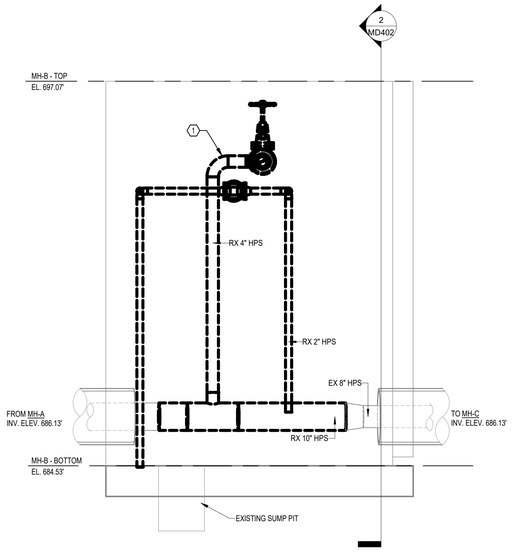


3 SECTION A - MECHANICAL - DEMOLITION - MH-16A - PH 3
1/2" = 1'-0"

4 EXISTING CONDITIONS - MH-B - PH 3
N.T.S.

N 0 1' 2' 4' 6'
1/2" = 1'-0"

| Revisions | Date |
|---|---|
| | |

CONSULTANT

ARCHITECT/ENGINEER OF RECORD

2014-2024 10TH ANNIVERSARY
Above Group
ENGINEERING | DESIGN | CONSULTING
SDVOSB
www.abovegroupinc.com
COA/CA Lic. No. 31120
305 East Dr., Suite H,
Melbourne, Florida 32904
PH: 321.345.9026

STAMP

STATE OF MARYLAND
GEOFFREY S. CHENOWETH
No. 38853
REGISTERED
PROFESSIONAL ENGINEER

Office of Construction and Facilities Management

VA U.S. Department of Veterans Affairs

| Drawing Title | Phase | Project Title | Project Number |
|---|---|---|---|
| MH-16A - MECH PLANS AND SECTIONS - DEMOLITION - PHASE 3 | 100% CONSTRUCTION DOCUMENTS | STEAM LINE REPLACEMENT | 659-24-903 |
| | | | Building Number |
| Approved: | | Location: SALISBURY VAMC | Drawing Number: MD402 |
| | | Issue Date: 09/27/2024 · Checked: GC · Drawn: DG | |

VA FORM 08 - 6231

Autodesk Docs://0123056 - Salisbury Steam Line Replacement/0123056 - VA Salisbury Stm Line Rplc - R23_ME.rvt
9/27/2024 11:10:45 AM

DRAWING NOTES:

1. CONTRACTOR TO FIELD-VERIFY EXISTING CONDITIONS AND BRING ANY KNOWN DISCREPANCIES TO THE ATTENTION OF THE COR FOR REVIEW AND CONTRACT RESOLUTION.

CODED NOTES:

1. REMOVE EXISTING STEAM PIPING 5' OUTSIDE OF MANHOLE FOR FURTHER REMOVAL IN A FUTURE PHASE. SEE SITE PLAN FOR CONTINUATION.
2. DISCONNECT AND REMOVE EXISTING STEAM PIPING FOR INSTALLATION OF HEADER IN NEW WORK PHASE.

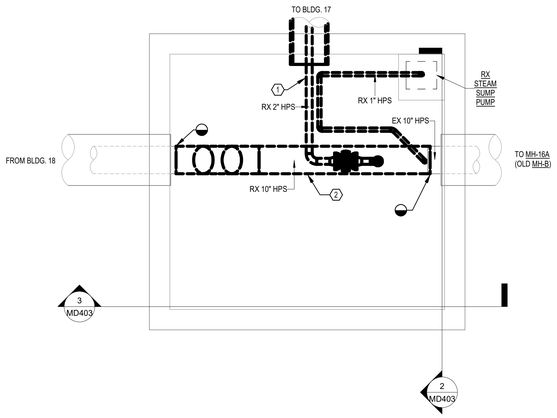


1 ENLARGED PLAN - MECHANICAL - DEMOLITION - MH-17B - PH 3
1/2" = 1'-0"

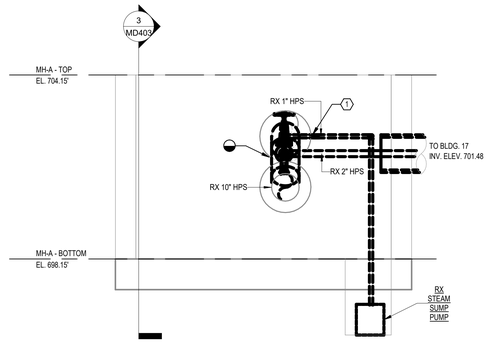


2 SECTION B - MECHANICAL - DEMOLITION - MH-17B - PH 3
1/2" = 1'-0"

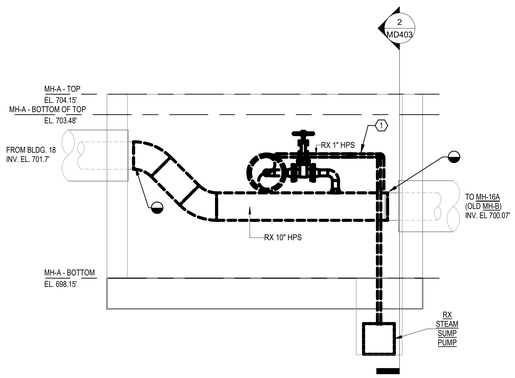


3 SECTION A - MECHANICAL - DEMOLITION - MH-17B - PH 3
1/2" = 1'-0"

4 EXISTING CONDITIONS - MH-A - PH 3
N.T.S.

N 0 1' 2' 4' 6'
1/2" = 1'-0"

| Revisions | Date |
|---|---|

CONSULTANT

ARCHITECT/ENGINEER OF RECORD

2014-2024 10TH ANNIVERSARY Above Group ENGINEERING | DESIGN | CONSULTING
SDVOSB
www.abovegroupinc.com
COA/CA Lic. No. 31120
305 East Dr., Suite H, Melbourne, Florida 32904
PH: 321.345.9026

STAMP

STATE OF MARYLAND GEOFFREY S. CHENNETH NO. 28825 REGISTERED PROFESSIONAL ENGINEER

Office of Construction and Facilities Management

VA U.S. Department of Veterans Affairs

| | | | |
|---|---|---|---|
| Drawing Title: MH-17B - MECH PLANS AND SECTIONS - DEMOLITION - PHASE 3 | Phase: 100% CONSTRUCTION DOCUMENTS | Project Title: STEAM LINE REPLACEMENT | Project Number: 659-24-903 |
| | | | Building Number: |
| Approved: | | Location: SALISBURY VAMC | Drawing Number: MD403 |
| | | Issue Date: 09/27/2024 · Checked: GC · Drawn: DG | |

VA FORM 08 - 6231

Autodesk Docs://012530/56 - Salisbury Steam Line Replacement/012530/56 - VA Salisbury Stm Line Repl - R23_ME.rvt
9/27/2024 11:10:47 AM

DRAWING NOTES:

1. CONTRACTOR TO FIELD-VERIFY EXISTING CONDITIONS AND BRING ANY KNOWN DISCREPANCIES TO THE ATTENTION OF THE COR FOR REVIEW AND CONTRACT RESOLUTION.

CODED NOTES:

1 EXISTING MANHOLE TO BE REMOVED BY OTHERS. REMOVE ALL ASSOCIATED PIPING, ANCHORS, PIPING SUPPORTS, ETC.

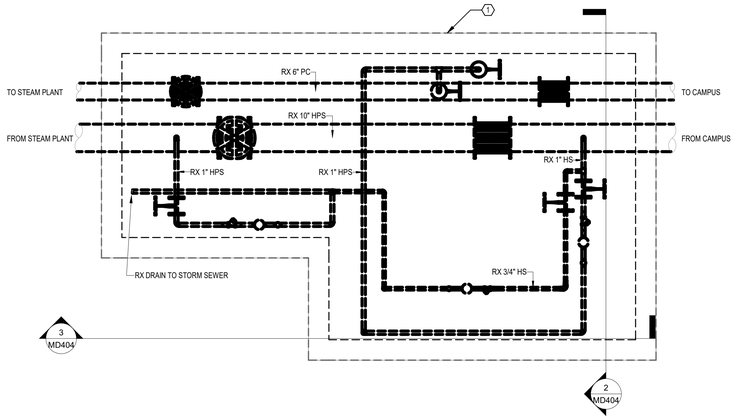


1 ENLARGED PLAN - MECHANICAL - DEMOLITION - MH-1 - PH 4
1/2" = 1'-0"

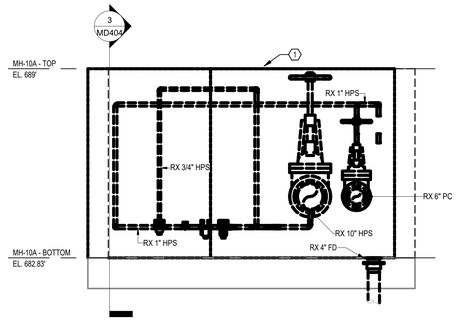


2 SECTION B - MECHANICAL - DEMOLITION - MH-1 - PH 4
1/2" = 1'-0"

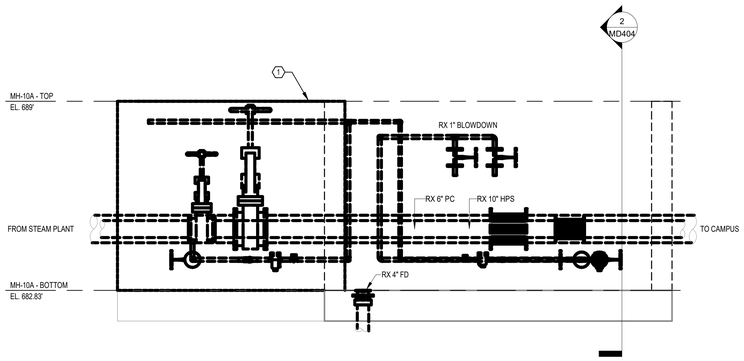


3 SECTION A - MECHANICAL - DEMOLITION - MH-1 - PH 4
1/2" = 1'-0"

4 EXISTING CONDITIONS - MH-1 - PH 4
N.T.S.

N 0 1' 2' 4' 6'
1/2" = 1'-0"

| Revisions | Date |
|---|---|

CONSULTANT

ARCHITECT/ENGINEER OF RECORD

2014-2024 10TH ANNIVERSARY Above Group ENGINEERING | DESIGN | CONSULTING
SDVOSB
www.abovegroupinc.com
COA/CA Lic. No. 31120
305 East Dr., Suite H,
Melbourne, Florida 32904
PH: 321.345.9026

STAMP

STATE OF MARYLAND · GEOFFREY S. CHEATHEM · No. 28825 · REGISTERED PROFESSIONAL ENGINEER

Office of Construction and Facilities Management

VA U.S. Department of Veterans Affairs

| | | | |
|---|---|---|---|
| Drawing Title: MH-1 - MECH PLANS AND SECTIONS - DEMOLITION - PHASE 4 | Phase: 100% CONSTRUCTION DOCUMENTS | Project Title: STEAM LINE REPLACEMENT | Project Number: 659-24-903 |
| Approved: | | | Building Number: |
| | | Location: SALISBURY VAMC | Drawing Number: MD404 |
| | | Issue Date: 09/27/2024 · Checked: GC · Drawn: DG | |

VA FORM 08 - 6231

Autodesk Docs://R123056 - Salisbury Steam Line Replacement/01R23056 - VA Salisbury Strm Line Repl - R23_ME.rvt
9/27/2024 11:10:48 AM

DRAWING NOTES:

1. CONTRACTOR TO FIELD-VERIFY EXISTING CONDITIONS AND BRING ANY KNOWN DISCREPANCIES TO THE ATTENTION OF THE COR FOR REVIEW AND CONTRACT RESOLUTION.

CODED NOTES:

1 REMOVE ALL PIPING AND ASSOCIATED, ANCHORS, PIPING SUPPORTS, ETC. MANHOLE TO BE REMOVED IN PHASE 6.

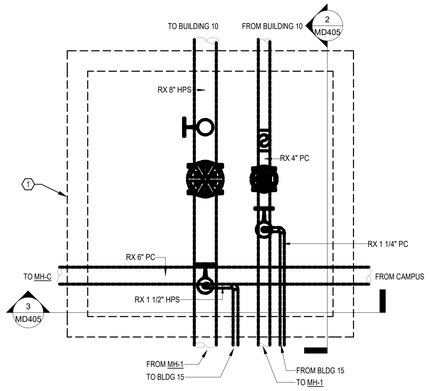


1 ENLARGED PLAN - MECHANICAL - DEMOLITION - MH-10A - PH 6
1/2" = 1'-0"

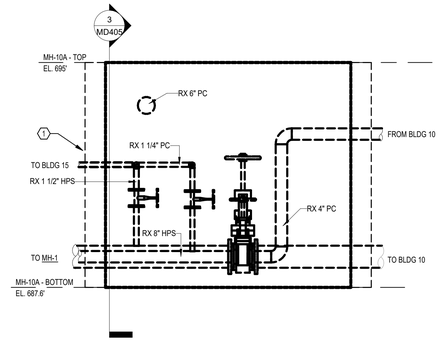


2 SECTION A - MECHANICAL - DEMOLITION - MH-10A - PH 6
1/2" = 1'-0"

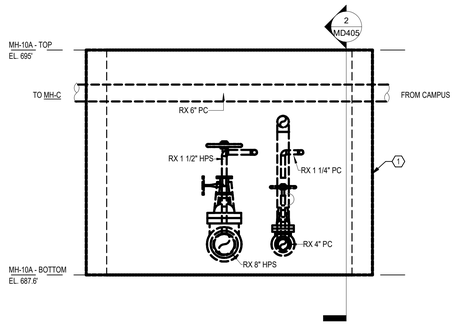


3 SECTION B - MECHANICAL - DEMOLITION - MH-10A - PH 6
1/2" = 1'-0"

4 EXISTING CONDITIONS - MH-10A - PH 6
N.T.S.

N
0 1' 2' 4' 6'
1/2" = 1'-0"

CONSULTANT

ARCHITECT/ENGINEER OF RECORD

2014-2024 10TH ANNIVERSARY
Above Group
ENGINEERING | DESIGN | CONSULTING
SDVOSB
www.abovegroupinc.com
COA/CA Lic. No. 31120
305 East Dr., Suite H,
Melbourne, Florida 32904
PH: 321.345.9026

STAMP

STATE OF MARYLAND
GEOFREY S. CHENG
No. 28858
REGISTERED
PROFESSIONAL ENGINEER

Office of Construction and Facilities Management

VA U.S. Department of Veterans Affairs

| Revisions | Date |
|---|---|

| | |
|---|---|
| Drawing Title | MH-10A - MECH PLANS AND SECTIONS - DEMOLITION - PHASE 6 |
| Phase | 100% CONSTRUCTION DOCUMENTS |
| Project Title | STEAM LINE REPLACEMENT |
| Project Number | 659-24-903 |
| Building Number | |
| Approved: | |
| Location | SALISBURY VAMC |
| Issue Date | 09/27/2024 |
| Checked | GC |
| Drawn | DG |
| Drawing Number | MD405 |

VA FORM 08 - 6231

Autodesk Docs://0123056 - Salisbury Steam Line Replacement/0123056 - VA Salisbury Stm Line Repl - R23_ME.rvt
9/27/2024 11:10:49 AM

DRAWING NOTES:

1. CONTRACTOR TO FIELD-VERIFY EXISTING CONDITIONS AND BRING ANY KNOWN DISCREPANCIES TO THE ATTENTION OF THE COR FOR REVIEW AND CONTRACT RESOLUTION.

CODED NOTES:

1. BASEBID TO REMOVE EXISTING MANHOLE ACCESS AND ALL ASSOCIATED PIPING. DEDUCTIVE ALTERNATE #2 TO ABANDONED MANHOLE STRUCTURE AND EXISTING PIPING IN PLACE.
2. EXISTING STEAM PIPING TO BE DISCONNECTED FROM SYSTEM AND REMOVED.

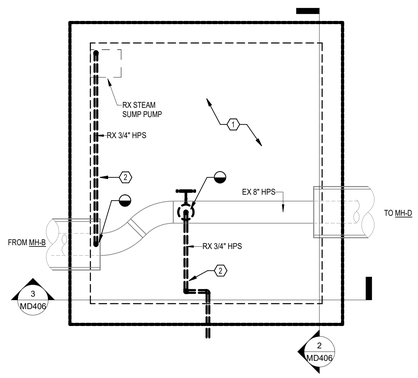


1 ENLARGED PLAN - MECHANICAL - DEMOLITION - MH-C - PH 6
1/2" = 1'-0"

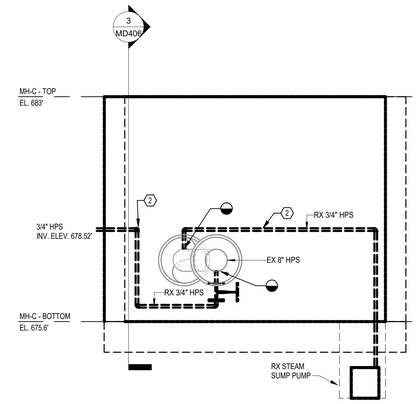


2 SECTION B - MECHANICAL - DEMOLITION - MH-C - PH 6
1/2" = 1'-0"

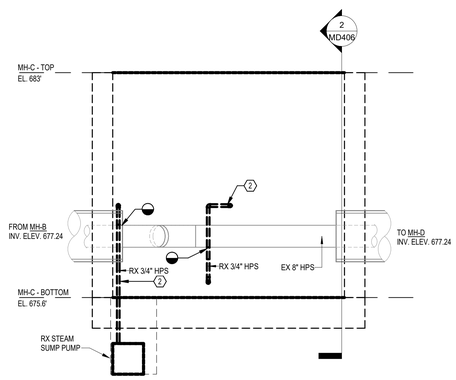


3 SECTION A - MECHANICAL - DEMOLITION - MH-C - PH 6
1/2" = 1'-0"

4 EXISTING CONDITIONS - MH-C - PH 6
N.T.S.

N 0 1' 2' 4' 6'
1/2" = 1'-0"

| Revisions | Date |
|---|---|

CONSULTANT

ARCHITECT/ENGINEER OF RECORD
2014-2024 10TH ANNIVERSARY Above Group ENGINEERING | DESIGN | CONSULTING
www.abovegroupinc.com
COA/CA Lic. No. 31120
305 East Dr., Suite H, Melbourne, Florida 32904
PH: 321.345.9026

STAMP
STATE OF MARYLAND GEOFFREY S. CHENOWETH No. 28825 REGISTERED PROFESSIONAL ENGINEER

Office of Construction and Facilities Management
VA U.S. Department of Veterans Affairs

| | | | |
|---|---|---|---|
| Drawing Title: MH-C - MECH PLANS AND SECTIONS - DEMOLITION - PHASE 6 | Phase: 100% CONSTRUCTION DOCUMENTS | Project Title: STEAM LINE REPLACEMENT | Project Number: 659-24-903 |
| | | | Building Number: |
| Approved: | | Location: SALISBURY VAMC | Drawing Number: MD406 |
| | | Issue Date: 09/27/2024 · Checked: GC · Drawn: DG | |

Autodesk Docs://012305b - Salisbury Steam Line Replacement/012305b - VA Salisbury Stm Line Repl - R23_ME.rvt
9/27/2024 11:10:59 AM

VA FORM 08 - 6231

DRAWING NOTES:

1. CONTRACTOR TO FIELD-VERIFY EXISTING CONDITIONS AND BRING ANY KNOWN DISCREPANCIES TO THE ATTENTION OF THE COR FOR REVIEW AND CONTRACT RESOLUTION.
2. ALL PIPING IN MANHOLE SHOWN AS INSIDE CLEAR DIMENSIONS. INSULATION FOR PIPING SHOWN AT MAN HOLE PENETRATION FOR ILLUSTRATION PURPOSES ONLY. SEE SPECS FOR INSULATION REQUIREMENTS.
3. ALL STEAM AND CONDENSATE PIPING THAT WILL REQUIRE FUTURE ISOLATION MUST BE PROVIDED WITH DOUBLE BLOCK AND BLEED ISOLATION VALVES.

CODED NOTES:

1. REMOVE EXISTING STEAM PIPING AND ASSOCIATED PIPING SUPPORT AND ANCHOR. SEE SITE PLAN FOR CONTINUATION.
2. OPEN/CLOSE EXISTING PHASING VALVE TO REDIRECT STEAM THROUGH NEW PIPING.

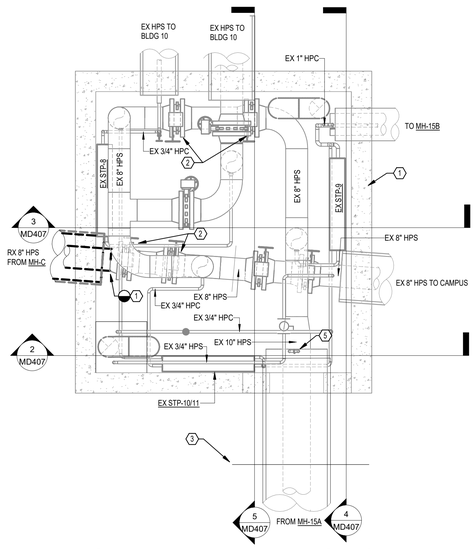


1 ENLARGED PLAN - EX MH-10B - DEMOLITION - PH6
1/2" = 1'-0"

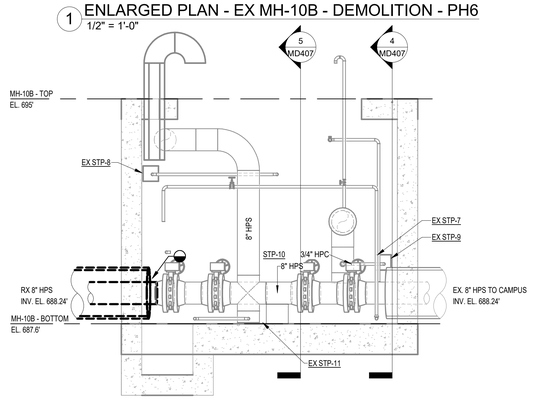


2 SECTION B - EX MH-10B - DEMOLITION - PH6
1/2" = 1'-0"

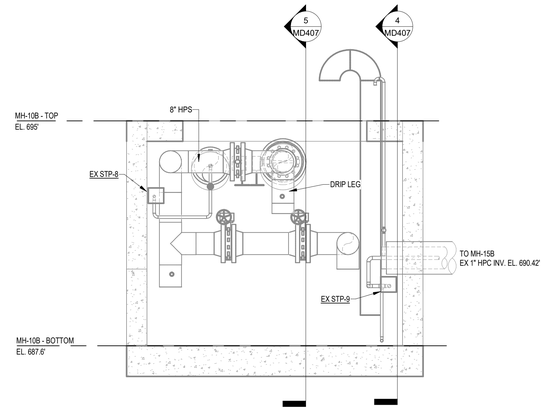


3 SECTION A - EX MH-10B - DEMOLITION - PH6
1/2" = 1'-0"

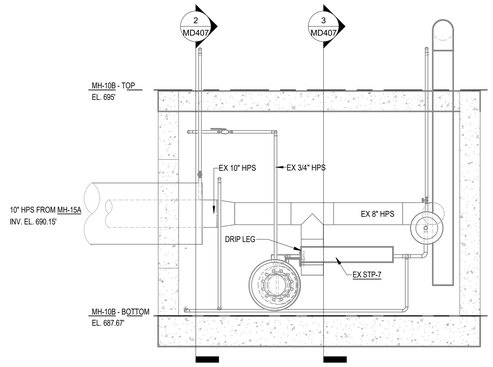


4 SECTION C - EX MH-10B - DEMOLITION - PH6
1/2" = 1'-0"

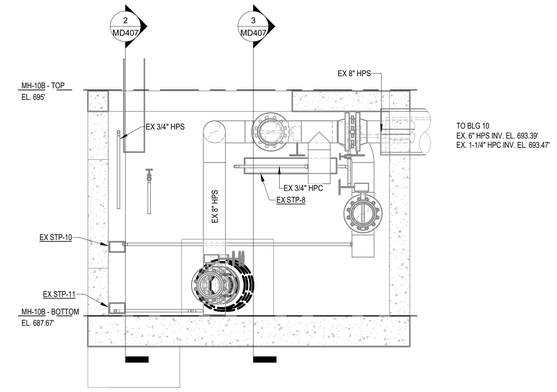


5 SECTION D - EX MH-10B - DEMOLITION - PH6
1/2" = 1'-0"

N 0 1' 2' 4' 6'
1/2" = 1'-0"

| Revisions | Date |
|---|---|

CONSULTANT

ARCHITECT/ENGINEER OF RECORD
2014-2024 10TH ANNIVERSARY Above Group ENGINEERING | DESIGN | CONSULTING
www.abovegroupinc.com
COA/CA Lic. No. 31120
305 East Dr., Suite H, Melbourne, Florida 32904
PH: 321.345.9026

STAMP
STATE OF MARYLAND GEOFREY S. CHENG No. 28825 REGISTERED PROFESSIONAL ENGINEER

Office of Construction and Facilities Management
VA U.S. Department of Veterans Affairs

| Drawing Title | Phase | Project Title | Project Number |
|---|---|---|---|
| MH-10B - MECH PLANS AND SECTIONS - DEMOLITION - PHASE 6 | 100% CONSTRUCTION DOCUMENTS | STEAM LINE REPLACEMENT | 659-24-903 |
| Approved: | | Location: SALISBURY VAMC | Building Number |
| | | Issue Date: 09/27/2024 · Checked: GC · Drawn: DG | Drawing Number: MD407 |

VA FORM 08 - 6231

Autodesk Docs://012305S - Salisbury Steam Line Replacement/012305S - VA Salisbury Stm Line Rep - R23_ME.rvt 9/27/2024 11:10:54 AM

DRAWING NOTES:

1. CONTRACTOR TO FIELD-VERIFY EXISTING CONDITIONS AND BRING ANY KNOWN DISCREPANCIES TO THE ATTENTION OF THE COR FOR REVIEW AND CONTRACT RESOLUTION.

CODED NOTES:

1. REMOVE EXISTING STEAM PIPING AND ASSOCIATED PIPING SUPPORTS TO 5' OUTSIDE OF MANHOLE.
2. REMOVE EXISTING TEMPORARY STEAM PIPING AND ASSOCIATED PIPING SUPPORTS. SEE SITE PLAN FOR CONTINUATION.

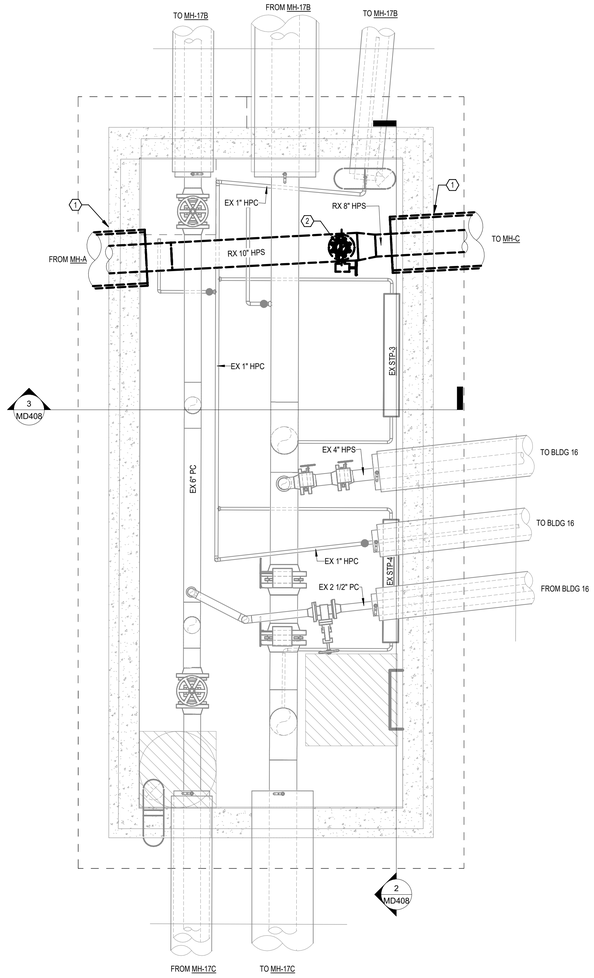


1 ENLARGED PLAN - MECHANICAL - DEMOLITION - MH-16A - PH 6
1/2" = 1'-0"

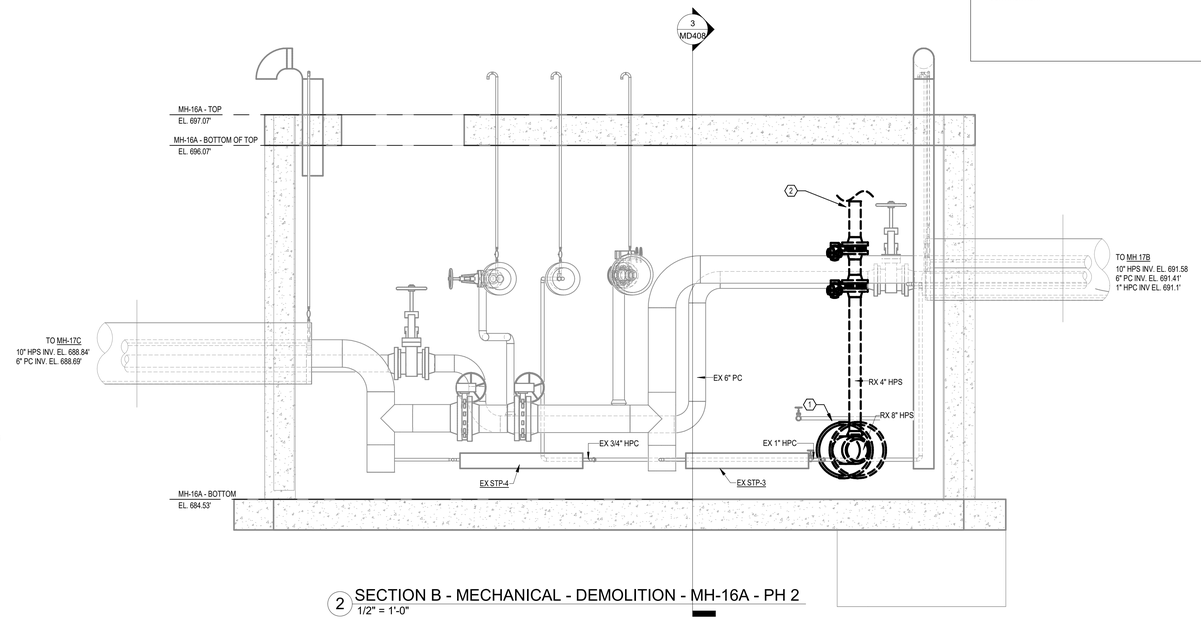


2 SECTION B - MECHANICAL - DEMOLITION - MH-16A - PH 2
1/2" = 1'-0"

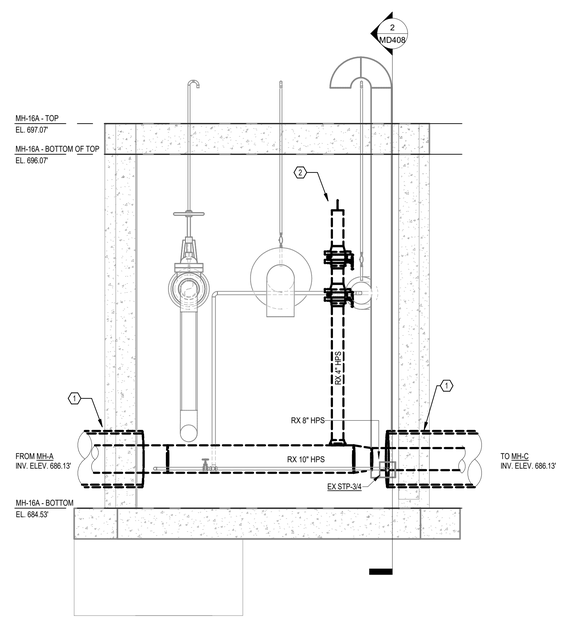


3 SECTION A - MECHANICAL - DEMOLITION - MH-16A - PH 6
1/2" = 1'-0"

4 EXISTING CONDITIONS - MH-B - PH 6
N.T.S.

N 0 1' 2' 4' 6'
1/2" = 1'-0"

| Revisions | Date |
|---|---|

CONSULTANT

ARCHITECT/ENGINEER OF RECORD
2014-2024 10TH ANNIVERSARY Above Group ENGINEERING | DESIGN | CONSULTING
SDVOSB
www.abovegroupinc.com
COA/CA Lic. No. 31120
305 East Dr., Suite H,
Melbourne, Florida 32904
PH: 321.345.9026

STAMP
STATE OF MARYLAND GEOFFREY S. CHENOWETH No. 29825 REGISTERED PROFESSIONAL ENGINEER

Office of Construction and Facilities Management
VA U.S. Department of Veterans Affairs

| | | | |
|---|---|---|---|
| Drawing Title: MH-16A - MECH PLANS AND SECTIONS - DEMOLITION - PHASE 6 | Phase: 100% CONSTRUCTION DOCUMENTS | Project Title: STEAM LINE REPLACEMENT | Project Number: 659-24-903 |
| | | | Building Number: |
| Approved: | | Location: SALISBURY VAMC | Drawing Number: MD408 |
| | | Issue Date: 09/27/2024 · Checked: GC · Drawn: DG | |

VA FORM 08 - 6231

Autodesk Docs://012305b - Salisbury Steam Line Replacement/012305b - VA Salisbury Stm Line Repl - R23_ME.rvt
9/27/2024 11:11:00 AM

DRAWING NOTES:

1. CONTRACTOR TO FIELD-VERIFY EXISTING CONDITIONS AND BRING ANY KNOWN DISCREPANCIES TO THE ATTENTION OF THE COR FOR REVIEW AND CONTRACT RESOLUTION.

CODED NOTES:

1. OPEN/CLOSE PHASING VALVES TO ROUTE STEAM THROUGH NEW STEAM PIPING.
2. REMOVE STEAM PIPING 5' OUTSIDE OF MANHOLE. PATCH MANHOLE. SEE STRUCTURAL DETAILS AND SPECIFICATIONS.
3. REMOVE EXISTING TEMPORARY STEAM/CONDENSATE PIPING AND ASSOCIATED PIPE SUPPORTS. UTILIZE TAP FOR FUTURE STEAM POWERED SUMP PUMP

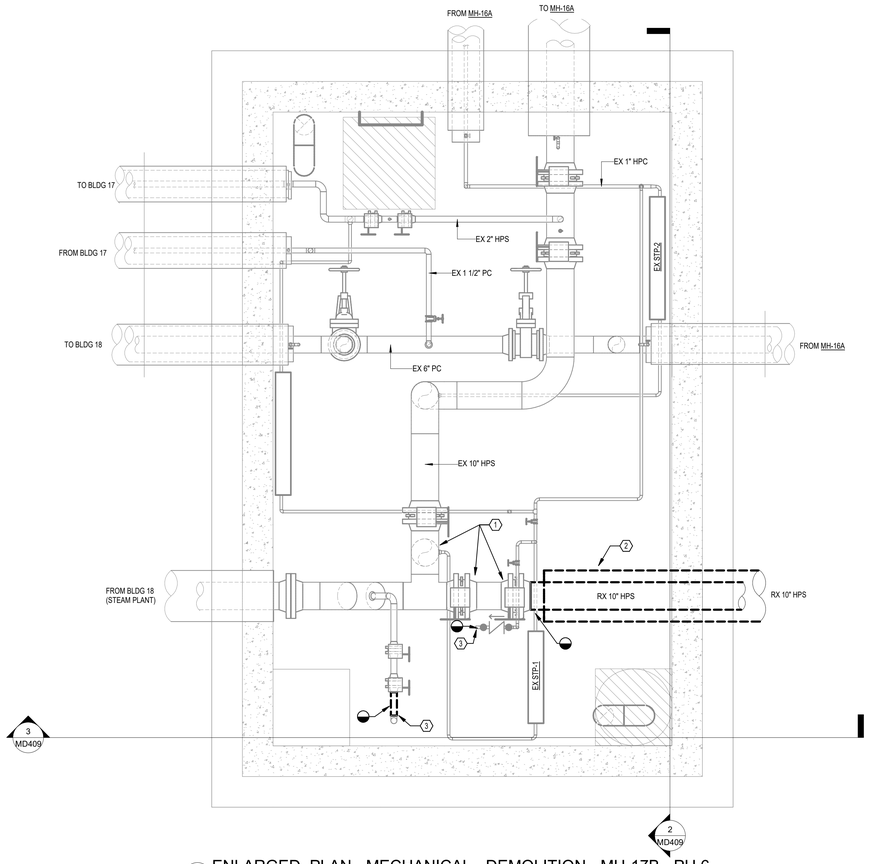


1 ENLARGED PLAN - MECHANICAL - DEMOLITION - MH-17B - PH 6
1/2" = 1'-0"

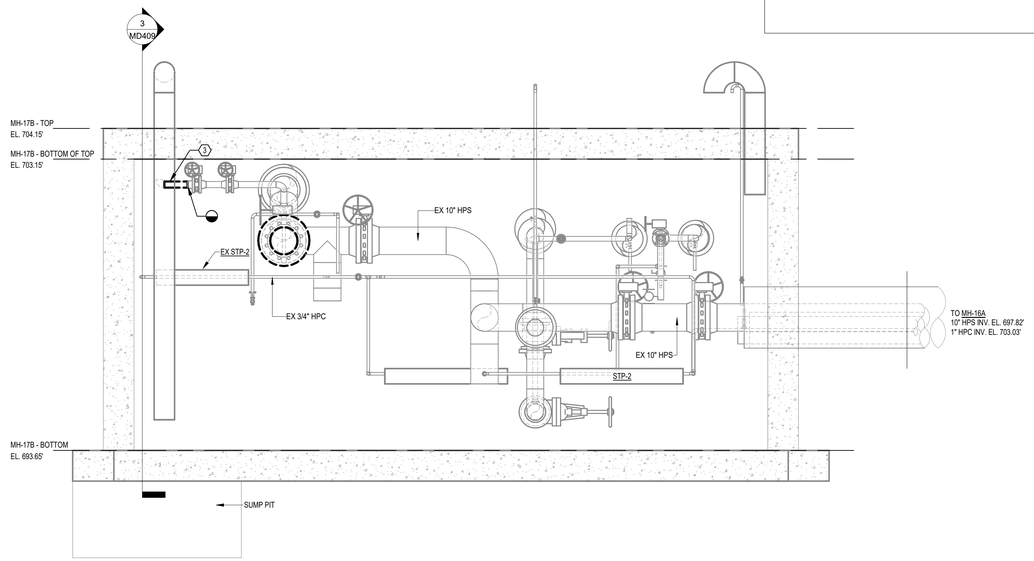


2 SECTION B - MECHANICAL - DEMOLITION - MH-17B - PH 6
1/2" = 1'-0"

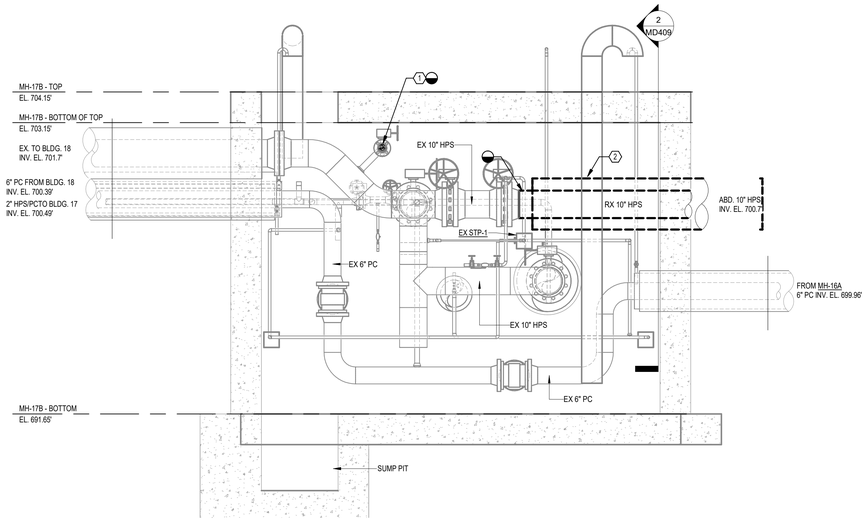


3 SECTION A - MECHANICAL - DEMOLITION - MH-17B - PH 6
1/2" = 1'-0"

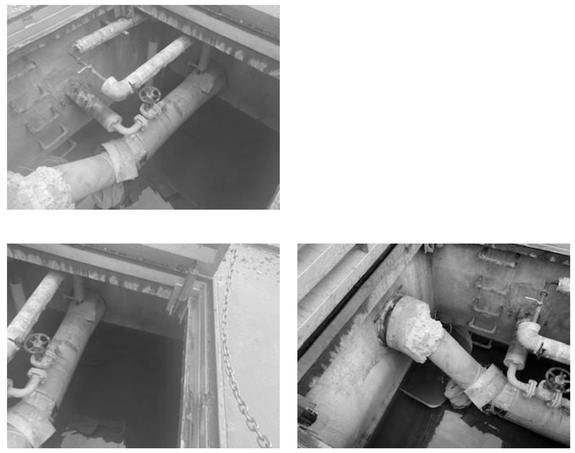

4 EXISTING CONDITIONS - MH-A - PH 6
N.T.S.

N 0 1' 2' 4' 6'
1/2" = 1'-0"

| Revisions | Date |
|---|---|

CONSULTANT

ARCHITECT/ENGINEER OF RECORD

2014-2024 10TH ANNIVERSARY
Above Group
ENGINEERING | DESIGN | CONSULTING
www.abovegroupinc.com
COA/CA Lic. No. 31120
305 East Dr., Suite H,
Melbourne, Florida 32904
PH: 321.345.9026

STAMP

STATE OF MARYLAND
GEOFFREY S. CHENOWETH
No. 28855
REGISTERED PROFESSIONAL ENGINEER

Office of Construction and Facilities Management

VA U.S. Department of Veterans Affairs

| Drawing Title | Phase | Project Title | Project Number |
|---|---|---|---|
| MH-17B - MECH PLANS AND SECTIONS - DEMOLITION - PHASE 6 | 100% CONSTRUCTION DOCUMENTS | STEAM LINE REPLACEMENT | 659-24-903 |
| Approved: | | Location: SALISBURY VAMC | Building Number |
| | | Issue Date: 09/27/2024 / Checked: GC / Drawn: DG | Drawing Number: MD409 |

VA FORM 08 - 6231

Autodesk Docs://0123056 - Salisbury Steam Line Replacement/0123056 - VA Salisbury Stm Line Repl - R23_ME.rvt
9/27/2024 11:11:08 AM

## DRAWING NOTES:

1. CONTRACTOR TO FIELD-VERIFY EXISTING CONDITIONS AND BRING ANY KNOWN DISCREPANCIES TO THE ATTENTION OF THE COR FOR REVIEW AND CONTRACT RESOLUTION.
2. ALL PIPING IN MANHOLE SHOWN AS INSIDE CLEAR DIMENSIONS. INSULATION FOR PIPING SHOWN AT MAN HOLE PENETRATION FOR ILLUSTRATION PURPOSES ONLY. SEE SPECS FOR INSULATION REQUIREMENTS.
3. ALL STEAM AND CONDENSATE PIPING THAT WILL REQUIRE FUTURE ISOLATION MUST BE PROVIDED WITH DOUBLE BLOCK AND BLEED ISOLATION VALVES.
4. INSTALL ALL VALVES PER MANUFACTURERS RECOMMENDATIONS. ANGLE VALVES AS REQUIRED TO ALLOW EASE OF ACCESS WHILE STAYING INSIDE MANUFACTURERS REQUIREMENTS.

## CODED NOTES:

1. EXISTING MANHOLE MH-10B TO REMAIN
2. STEAM/CONDENSATE PIPING CAPPED FOR FUTURE STEAM PUMP INSTALLATION.
3. PROVIDE ANCHOR 5' OUTSIDE OF MANHOLE. SEE SITE PLAN.
4. PROVIDE NEW ANCHOR INSIDE MANHOLE.
5. VENT PIPING CONDUIT THROUGH TOP OF MANHOLE. TERMINATE PIPING AT GOOSENECK WITH OPENING 14" ABOVE TOP OF MANHOLE.
6. SPACE BETWEEN BOTTOM OF PIPE AND MANHOLE IS EXTREMELY LIMITED. CONTRACTOR TO FIELD VERIFY FEASIBILITY OF INSTALLING A 4 WAY T IN PIPING AS SHOWN PRIOR TO START OF CONSTRUCTION.
7. PROVIDE WATER MONITORING SYSTEM WITH LEAK/LEVEL GAUGE ABOVE GRADE. SEE MANHOLE ANALOG ALARM INDICATOR DETAIL ON SHEET M-501. SCOPE TO BE REMOVED FROM THE PROJECT AS A PART OF DEDUCTIVE ALTERNATE #1. SEE DEDUCTIVE ALTERNATE SCHEDULE ON SHEET M-101
8. PHASING VALVE TO BE CLOSED AFTER INSTALLATION. VALVE TO BE OPENED AFTER COMPLETION OF NEW STEAM INSTALLATION IN PHASE 5.
9. PHASING VALVE TO BE OPENED AFTER INSTALLATION. VALVE TO BE CLOSED AFTER COMPLETION OF NEW STEAM INSTALLATION IN PHASE 5.
10. VALVE TO BE CLOSED AFTER INSTALLATION. VALVE TO BE UTILIZED FOR BACKUP OPERATION OF BUILDING 10 IN THE EVENT THAT BUILDING 10'S STEAM IS NON OPERATIONAL.
11. EXISTING ENTRANCE HATCH FOR MH-10B.
12. 8" HIGH VENT. TERMINATE WITH GOOSENECK 14" ABOVE MANHOLE TOP.
13. 8" LOW VENT. TERMINATE WITH GOOSENECK 14" ABOVE MANHOLE TOP. TERMINATE BOTTOM OF PIPE 12" ABOVE MANHOLE FLOOR.

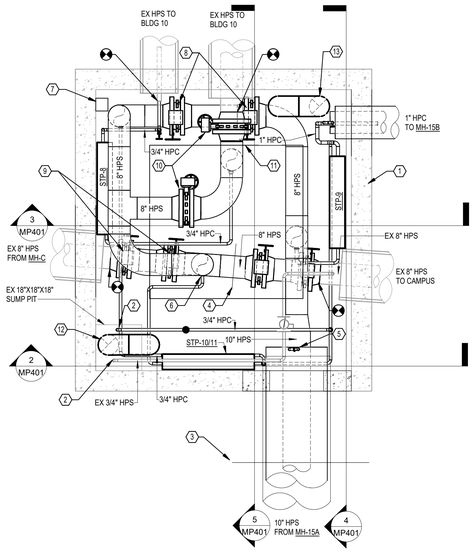


1 ENLARGED PLAN - EX MH-10B - NEW WORK - PH 3
1/2" = 1'-0"

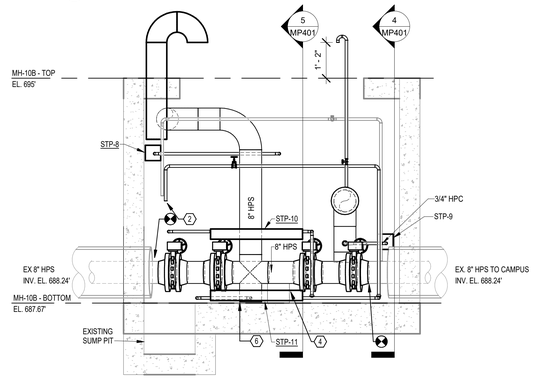


2 SECTION B - EX MH-10B - NEW WORK - PH 3
1/2" = 1'-0"

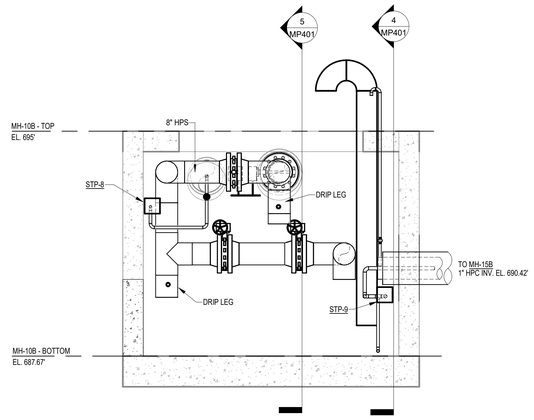


3 SECTION A - EX MH-10B - NEW WORK - PH 3
1/2" = 1'-0"

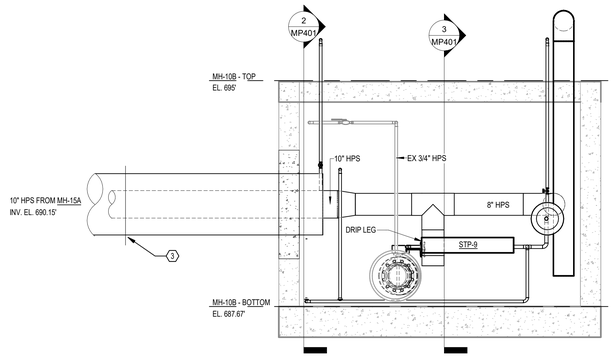


4 SECTION C - EX MH-10B - NEW WORK - PH 3
1/2" = 1'-0"

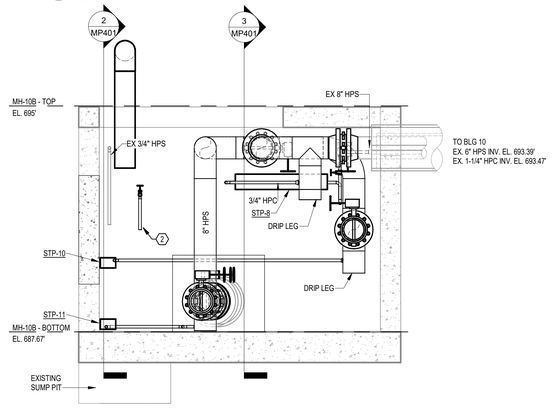


5 SECTION D - EX MH-10B - NEW WORK - PH 3
1/2" = 1'-0"

N 0 1' 2' 4' 6'
1/2" = 1'-0"

| Revisions | Date |
|---|---|

CONSULTANT

ARCHITECT/ENGINEER OF RECORD

2014-2024 10TH ANNIVERSARY Above Group ENGINEERING | DESIGN | CONSULTING
SDVOSB
www.abovegroupinc.com
COA/CA Lic. No. 31120
305 East Dr., Suite H,
Melbourne, Florida 32904
PH: 321.345.9026

STAMP
STATE OF MARYLAND GEOFFREY S. CHEUNG PROFESSIONAL ENGINEER NO. 28825 REGISTERED

Office of Construction and Facilities Management
VA U.S. Department of Veterans Affairs

| Drawing Title | Phase | Project Title | Project Number |
|---|---|---|---|
| MH-10B - MECH PLANS AND SECTIONS - NEW WORK - PHASE 3 | 100% CONSTRUCTION DOCUMENTS | STEAM LINE REPLACEMENT | 659-24-903 |
| Approved: | | Location: SALISBURY VAMC | Building Number |
| | | Issue Date: 09/27/2024 / Checked: GC / Drawn: DG | Drawing Number: MP401 |

VA FORM 08 - 6231

Autodesk Docs://0123056 - Salisbury Steam Line Replacement/0123056 - VA Salisbury Stm Line Repl - R23_ME.rvt 9/27/2024 11:11:11 AM

DRAWING NOTES:

1. CONTRACTOR TO FIELD-VERIFY EXISTING CONDITIONS AND BRING ANY KNOWN DISCREPANCIES TO THE ATTENTION OF THE COR FOR REVIEW AND CONTRACT RESOLUTION.
2. ALL PIPING IN MANHOLE SHOWN AS INSIDE CLEAR DIMENSIONS. INSULATION FOR PIPING SHOWN AT MAN HOLE PENETRATION FOR ILLUSTRATION PURPOSES ONLY. SEE SPECS FOR INSULATION REQUIREMENTS.
3. ALL STEAM AND CONDENSATE PIPING THAT WILL REQUIRE FUTURE ISOLATION MUST BE PROVIDED WITH DOUBLE BLOCK AND BLEED ISOLATION VALVES.

CODED NOTES:

1. 4" HIGH PRESSURE STEAM TEMPORARY CONNECTION.

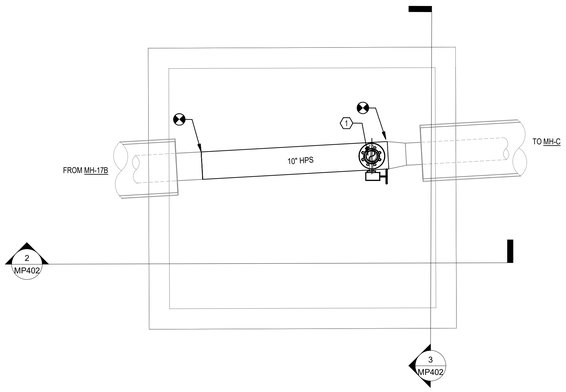


1 ENLARGED PLAN - MH-16A - NEW WORK - PH 3
1/2" = 1'-0"

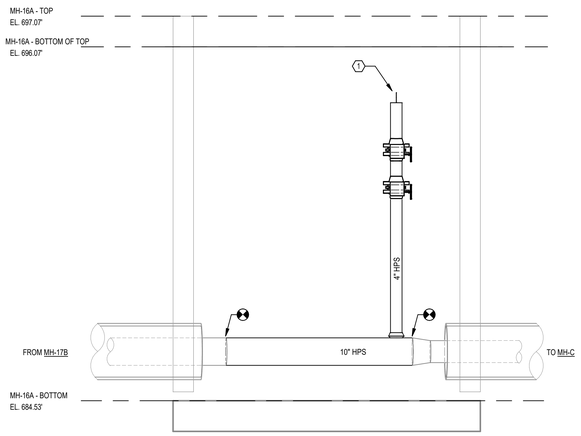


2 SECTION A - MH-16A - NEW WORK - PH 3
1/2" = 1'-0"

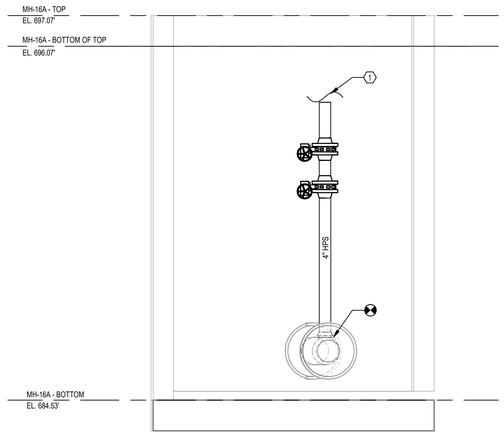


3 SECTION B - MH-16A - NEW WORK - PH 3
1/2" = 1'-0"

N 0 1' 2' 4' 6'
1/2" = 1'-0"

| Revisions | Date |
|---|---|

CONSULTANT

ARCHITECT/ENGINEER OF RECORD

2014-2024 10TH ANNIVERSARY Above Group ENGINEERING | DESIGN | CONSULTING

SDVOSB

www.abovegroupinc.com
COA/CA Lic. No. 31120

305 East Dr., Suite H,
Melbourne, Florida 32904
PH: 321.345.9026

STAMP

STATE OF MARYLAND · GEOFFREY S. CHENOWETH · No. 28825 · REGISTERED PROFESSIONAL ENGINEER

Office of Construction and Facilities Management

VA U.S. Department of Veterans Affairs

| | |
|---|---|
| Drawing Title | MH-16A - MECH PLANS AND SECTIONS - NEW WORK - PHASE 3 |
| Approved: | |
| Phase | 100% CONSTRUCTION DOCUMENTS |
| Project Title | STEAM LINE REPLACEMENT |
| Project Number | 659-24-903 |
| Building Number | |
| Location | SALISBURY VAMC |
| Issue Date | 09/27/2024 |
| Checked | GC |
| Drawn | DG |
| Drawing Number | MP402 |

VA FORM 08 - 6231

Autodesk Docs://012305b5 - Salisbury Steam Line Replacement/012305b5 - VA Salisbury Stm Line Repl - R23_ME.rvt 9/27/2024 11:11:11 AM

DRAWING NOTES:

1. CONTRACTOR TO FIELD-VERIFY EXISTING CONDITIONS AND BRING ANY KNOWN DISCREPANCIES TO THE ATTENTION OF THE COR FOR REVIEW AND CONTRACT RESOLUTION.
2. ALL PIPING IN MANHOLE SHOWN AS INSIDE CLEAR DIMENSIONS. INSULATION FOR PIPING SHOWN AT MAN HOLE PENETRATION FOR ILLUSTRATION PURPOSES ONLY. SEE SPECS FOR INSULATION REQUIREMENTS.
3. ALL STEAM AND CONDENSATE PIPING THAT WILL REQUIRE FUTURE ISOLATION MUST BE PROVIDED WITH DOUBLE BLOCK AND BLEED ISOLATION VALVES.

CODED NOTES:

1. 2" HIGH PRESSURE STEAM AND 1-1/4" HIGH PRESSURE CONDENSATE TEMPORARY CONNECTION, SEE 1/MP103 FOR TEMPORARY STEAM AND CONDENSATE ROUTING.
2. CONDENSATE PIPING CAPPED FOR CONTINUATION IN PHASE 4.
3. PHASING VALVE TO BE CLOSED AFTER INSTALLATION. VALVE TO BE OPENED AFTER COMPLETION OF NEW STEAM INSTALLATION IN PHASE 5.
4. PHASING VALVE TO BE OPENED AFTER INSTALLATION. VALVE TO BE CLOSED AFTER COMPLETION OF NEW STEAM INSTALLATION IN PHASE 5.

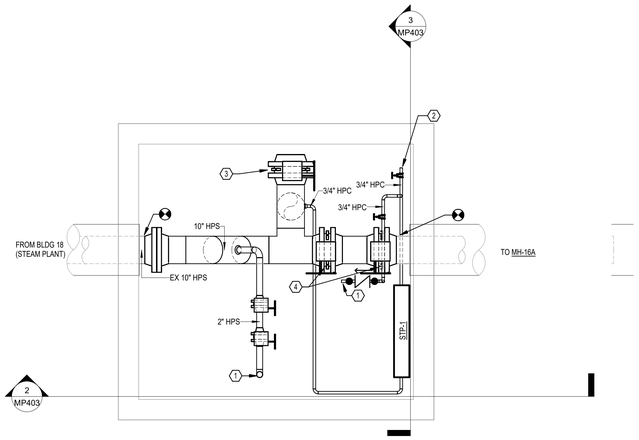


1 ENLARGED PLAN - MH-17B - NEW WORK - PH 3
1/2" = 1'-0"

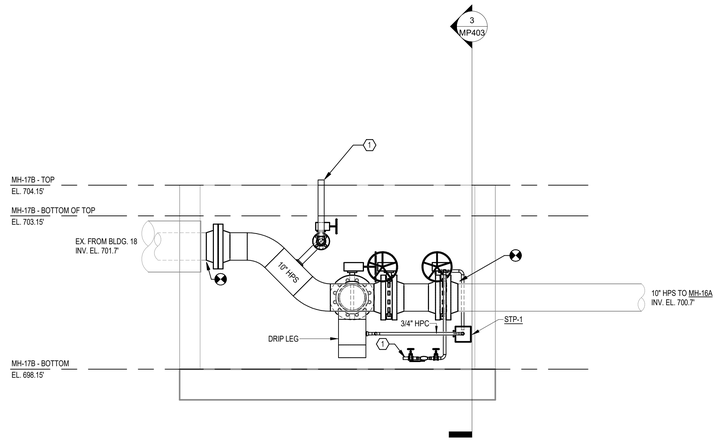


2 SECTION A - MH-17B - NEW WORK - PH 3
1/2" = 1'-0"

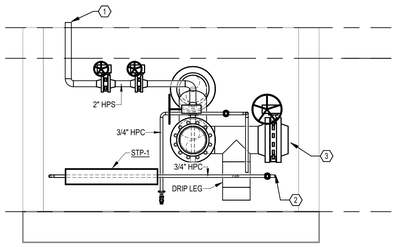


3 SECTION B - MH-17B - NEW WORK - PH 3
1/2" = 1'-0"

N 0 1' 2' 4' 6'
1/2" = 1'-0"

| Revisions | Date |
|---|---|

CONSULTANT

ARCHITECT/ENGINEER OF RECORD

2014-2024 10TH ANNIVERSARY Above Group ENGINEERING | DESIGN | CONSULTING
www.abovegroupinc.com
COA/CA Lic. No. 31120
305 East Dr., Suite H,
Melbourne, Florida 32904
PH: 321.345.9026

STAMP

STATE OF MARYLAND GEORGE S. CHENOWETH III No. 28825 REGISTERED PROFESSIONAL ENGINEER

Office of Construction and Facilities Management

VA U.S. Department of Veterans Affairs

| | |
|---|---|
| Drawing Title | MH-17B - MECH PLANS AND SECTIONS - NEW WORK - PHASE 3 |
| Phase | 100% CONSTRUCTION DOCUMENTS |
| Project Title | STEAM LINE REPLACEMENT |
| Project Number | 659-24-903 |
| Building Number | |
| Approved: | |
| Location | SALISBURY VAMC |
| Issue Date | 09/27/2024 |
| Checked | GC |
| Drawn | DG |
| Drawing Number | MP403 |

VA FORM 08 - 6231

Autodesk Docs://01230/56 - Salisbury Steam Line Replacement/01230/56 - VA Salisbury Stm Line Repl - R23_ME.rvt
9/27/2024 11:11:13 AM

## DRAWING NOTES:

1. CONTRACTOR TO FIELD-VERIFY EXISTING CONDITIONS AND BRING ANY KNOWN DISCREPANCIES TO THE ATTENTION OF THE COR FOR REVIEW AND CONTRACT RESOLUTION.
2. ALL PIPING IN MANHOLE SHOWN AS INSIDE CLEAR DIMENSIONS. INSULATION FOR PIPING SHOWN AT MAN HOLE PENETRATION FOR ILLUSTRATION PURPOSES ONLY. SEE SPECS FOR INSULATION REQUIREMENTS.
3. ALL STEAM AND CONDENSATE PIPING THAT WILL REQUIRE FUTURE ISOLATION MUST BE PROVIDED WITH DOUBLE BLOCK AND BLEED ISOLATION VALVES.

## CODED NOTES:

1. 48"X30" BILCO ENTRY DOOR BY OTHERS.
2. GALVANIZED LADDER BOLTED TO WALL WITH EXTENSION BAR ON TOP BY OTHERS.
3. 30"X30" BILCO DOORS FOR SUMP PIT ACCESS BY OTHERS.
4. 8" HIGH VENT. TERMINATE WITH GOOSENECK 14" ABOVE MANHOLE TOP.
5. 8" LOW VENT. TERMINATE WITH GOOSENECK 14" ABOVE MANHOLE TOP. TERMINATE BOTTOM OF PIPE 12" ABOVE MANHOLE FLOOR.
6. STEAM/CONDENSATE PIPING CAPPED FOR FUTURE STEAM PUMP INSTALLATION.
7. PROVIDE ANCHOR 5' OUTSIDE OF MANHOLE. SEE SITE PLAN.
8. VENT PIPING CONDUIT THROUGH TOP OF MANHOLE. TERMINATE PIPING AT GOOSENECK WITH OPENING 14" ABOVE TOP OF MANHOLE.
9. PROVIDE WATER MONITORING SYSTEM WITH LEAK/LEVEL GAUGE ABOVE GRADE. SEE MANHOLE ANALOG ALARM INDICATOR DETAIL ON SHEET M-501. SCOPE TO BE REMOVED FROM THE PROJECT AS A PART OF DEDUCTIVE ALTERNATE #1. SEE DEDUCTIVE ALTERNATE SCHEDULE ON SHEET M-101

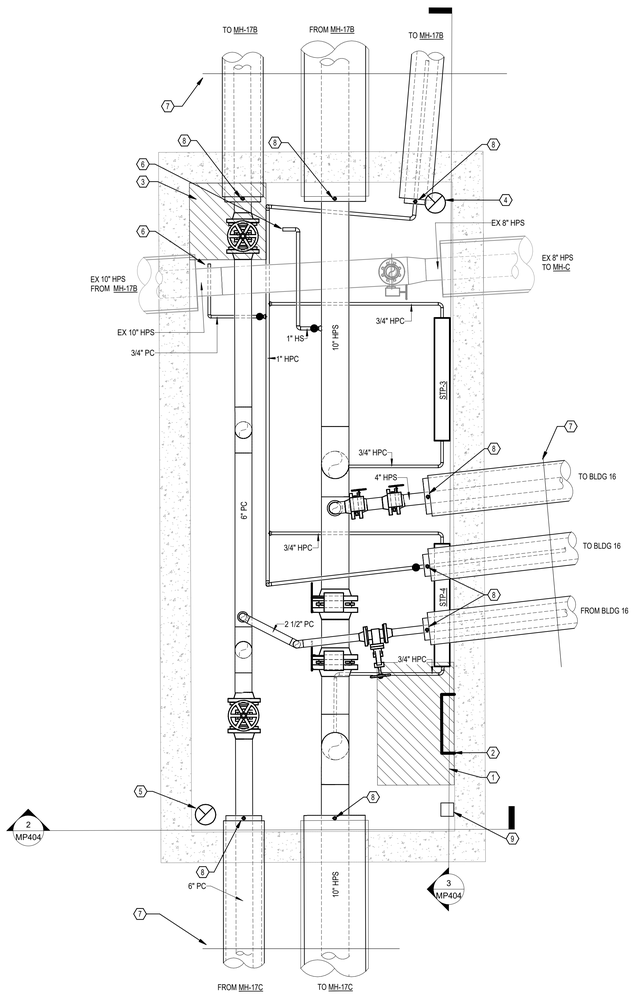


1 ENLARGED PLAN - MH-16A - NEW WORK - PH 4
1/2" = 1'-0"

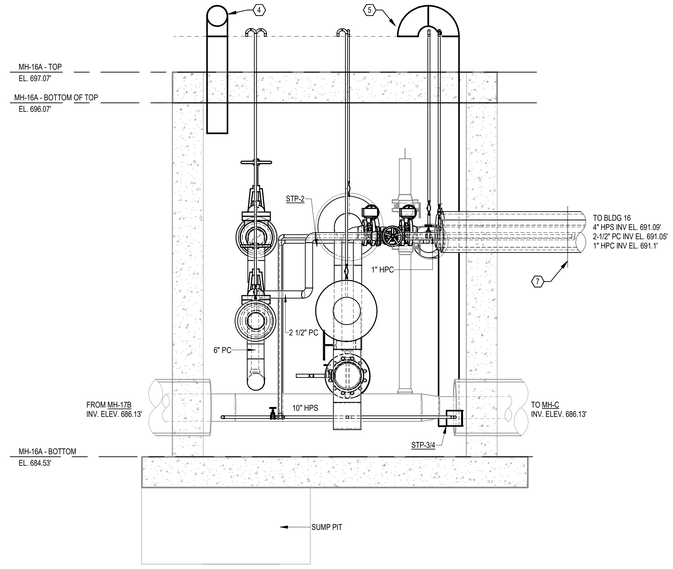


2 SECTION A - MH-16A - NEW WORK - PH 4
1/2" = 1'-0"

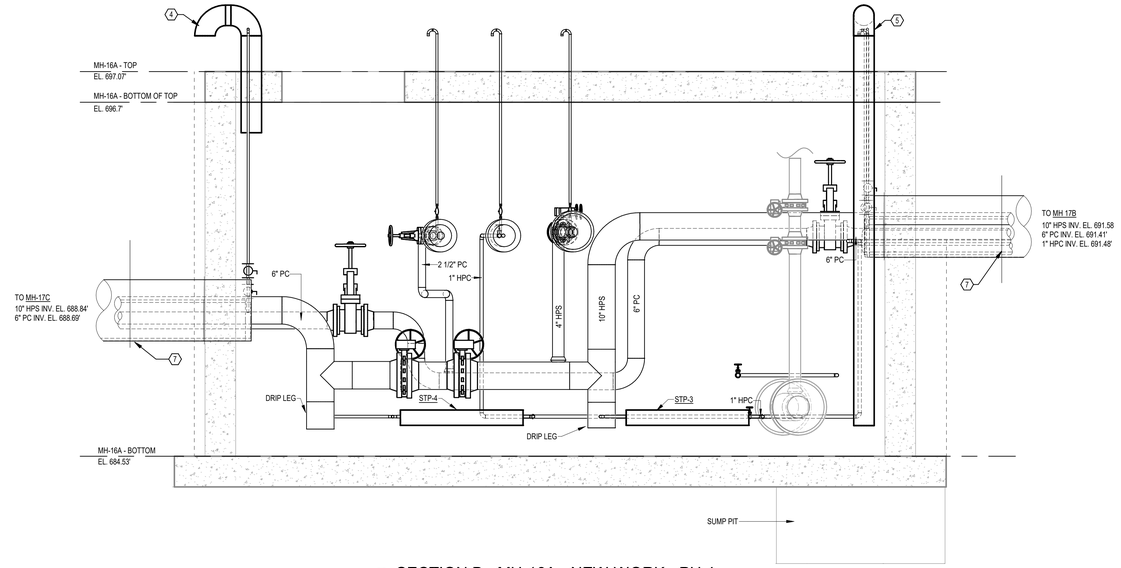


3 SECTION B - MH-16A - NEW WORK - PH 4
1/2" = 1'-0"

N 0 1' 2' 4' 6'
1/2" = 1'-0"

| CONSULTANT | ARCHITECT/ENGINEER OF RECORD | STAMP | Office of Construction and Facilities Management | Drawing Title | Phase | Project Title | Project Number |
|---|---|---|---|---|---|---|---|
| | 2014-2024 10TH ANNIVERSARY Above Group ENGINEERING \| DESIGN \| CONSULTING<br>www.abovegroupinc.com<br>COA/CA Lic. No. 31120<br>305 East Dr., Suite H, Melbourne, Florida 32904<br>PH: 321.345.9026 | STATE OF MARYLAND GEOFFREY S. CHENOWETH NO. 28825 REGISTERED PROFESSIONAL ENGINEER | VA U.S. Department of Veterans Affairs | MH-16A - MECH PLANS AND SECTIONS - NEW WORK - PHASE 4 | 100% CONSTRUCTION DOCUMENTS | STEAM LINE REPLACEMENT | 659-24-903 |
| | | | | Approved: | | Location: SALISBURY VAMC | Building Number |
| | | | | | | Issue Date: 09/27/2024 · Checked: GC · Drawn: DG | Drawing Number: MP404 |

Revisions | Date

VA FORM 08 - 6231

Autodesk Docs://0123056 - Salisbury Steam Line Replacement/0123056 - VA Salisbury Stm Line Repl - R23_ME.rvt 9/27/2024 11:11:21 AM

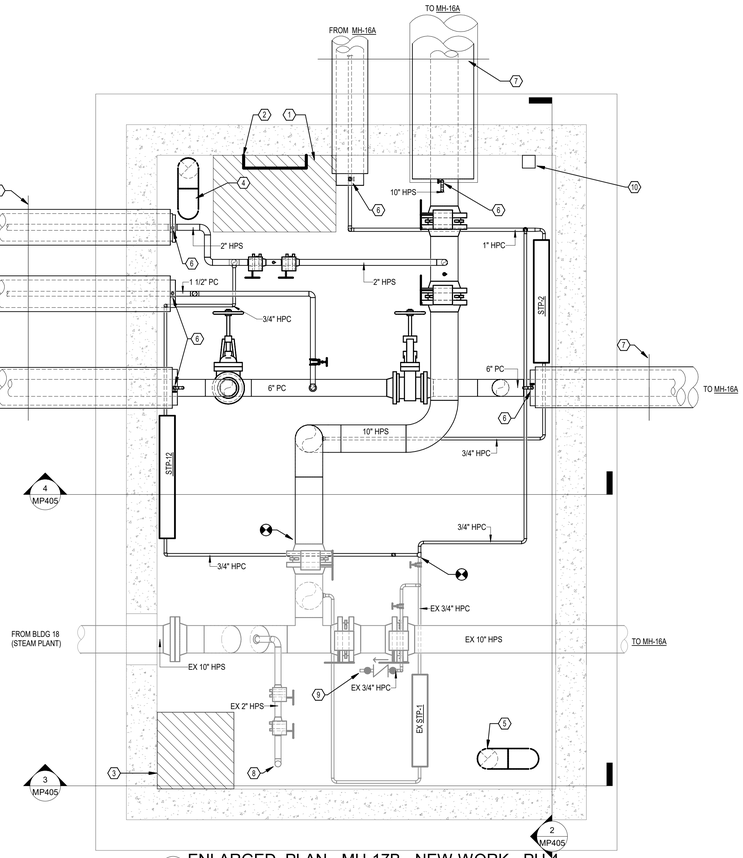


1 ENLARGED PLAN - MH-17B - NEW WORK - PH 4
1/2" = 1'-0"

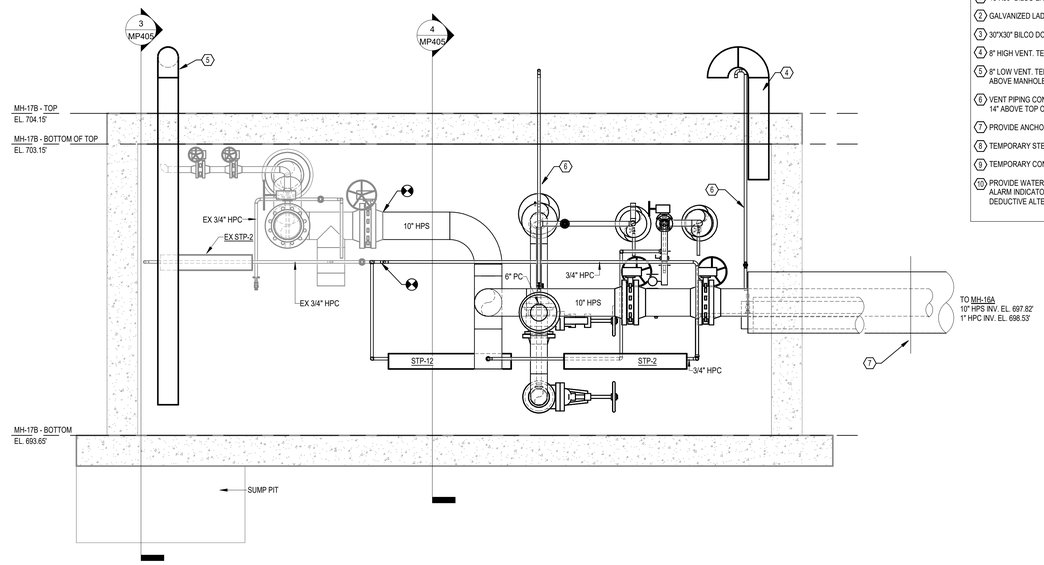


2 SECTION C - MH-17B - NEW WORK - PH 4
1/2" = 1'-0"

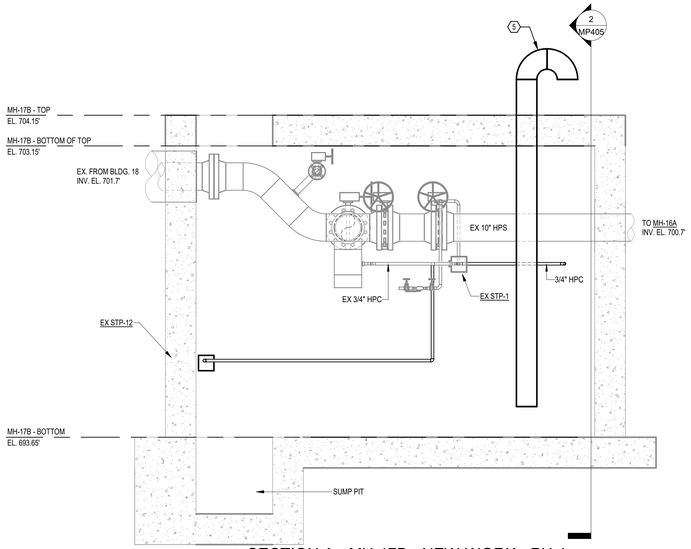


3 SECTION A - MH-17B - NEW WORK - PH 4
1/2" = 1'-0"

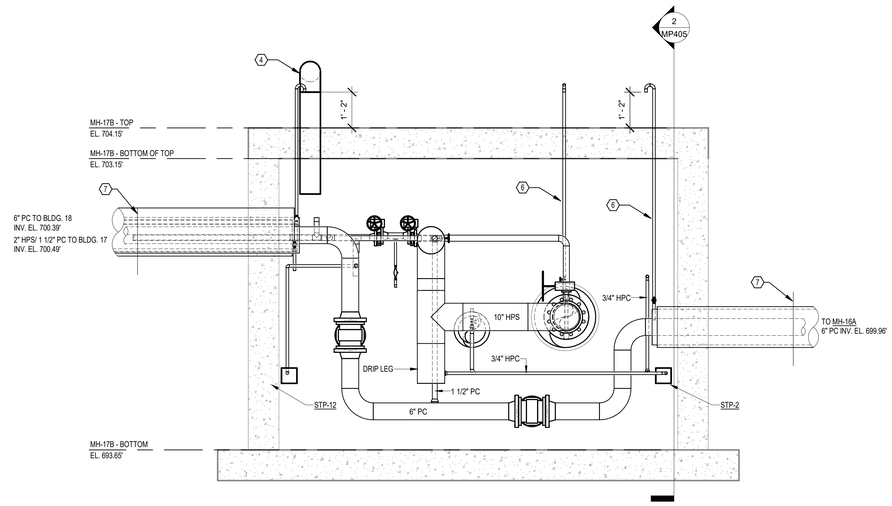


4 SECTION B - MH-17B - NEW WORK - PH 4
1/2" = 1'-0"

N 0 1' 2' 4' 6'
1/2" = 1'-0"

## DRAWING NOTES:

1. CONTRACTOR TO FIELD-VERIFY EXISTING CONDITIONS AND BRING ANY KNOWN DISCREPANCIES TO THE ATTENTION OF THE COR FOR REVIEW AND CONTRACT RESOLUTION.
2. ALL PIPING IN MANHOLE SHOWN AS INSIDE CLEAR DIMENSIONS. INSULATION FOR PIPING SHOWN AT MAN HOLE PENETRATION FOR ILLUSTRATION PURPOSES ONLY. SEE SPECS FOR INSULATION REQUIREMENTS.
3. ALL STEAM AND CONDENSATE PIPING THAT WILL REQUIRE FUTURE ISOLATION MUST BE PROVIDED WITH DOUBLE BLOCK AND BLEED ISOLATION VALVES.

## CODED NOTES:

1. 48"X30" BILCO ENTRY DOOR BY OTHERS.
2. GALVANIZED LADDER BOLTED TO WALL WITH EXTENSION BAR ON TOP BY OTHERS.
3. 30"X30" BILCO DOOR FOR SUMP PIT ACCESS BY OTHERS.
4. 8" HIGH VENT. TERMINATE WITH GOOSENECK 14" ABOVE MANHOLE TOP.
5. 8" LOW VENT. TERMINATE WITH GOOSENECK 14" ABOVE MANHOLE TOP. TERMINATE BOTTOM OF PIPE 12" ABOVE MANHOLE FLOOR.
6. VENT PIPING CONDUIT THROUGH TOP OF MANHOLE. TERMINATE PIPING AT GOOSENECK WITH OPENING 14" ABOVE TOP OF MANHOLE.
7. PROVIDE ANCHOR 5' OUTSIDE OF MANHOLE. SEE SITE PLAN.
8. TEMPORARY STEAM PIPING CONNECTION.
9. TEMPORARY CONDENSATE PIPING CONNECTION
10. PROVIDE WATER MONITORING SYSTEM WITH LEAK/LEVEL GAUGE ABOVE GRADE. SEE MANHOLE ANALOG ALARM INDICATOR DETAIL ON SHEET M-501. SCOPE TO BE REMOVED FROM THE PROJECT AS A PART OF DEDUCTIVE ALTERNATE #1. SEE DEDUCTIVE ALTERNATE SCHEDULE ON SHEET M-101

| Revisions | Date |
|---|---|

CONSULTANT

ARCHITECT/ENGINEER OF RECORD

2014-2024 10TH ANNIVERSARY Above Group ENGINEERING | DESIGN | CONSULTING
SDVOSB
www.abovegroupinc.com
COA/CA Lic. No. 31120
305 East Dr., Suite H, Melbourne, Florida 32904
PH: 321.345.9026

STAMP
STATE OF MARYLAND GEOFFREY S. CHEATHAM No. 28825 REGISTERED PROFESSIONAL ENGINEER

Office of Construction and Facilities Management
VA U.S. Department of Veterans Affairs

| | | | |
|---|---|---|---|
| Drawing Title: MH-17B - MECH PLANS AND SECTIONS - NEW WORK - PHASE 4 | Phase: 100% CONSTRUCTION DOCUMENTS | Project Title: STEAM LINE REPLACEMENT | Project Number: 659-24-903 |
| Approved: | | | Building Number: |
| | | Location: SALISBURY VAMC | Drawing Number: MP405 |
| | | Issue Date: 09/27/2024 · Checked: GC · Drawn: DG | |

VA FORM 08 - 6231

Autodesk Docs://01/23056 - Salisbury Steam Line Replacement/01/23056 - VA Salisbury Stm Line Repl - R23_ME.rvt
9/27/2024 11:11:28 AM

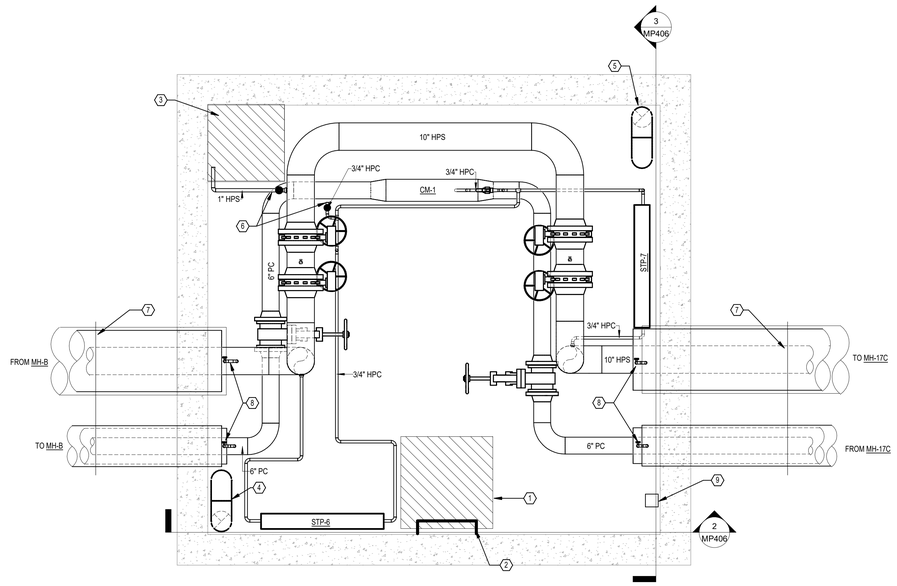


1 ENLARGED PLAN - MH-15A - NEW WORK - PH 5
1/2" = 1'-0"

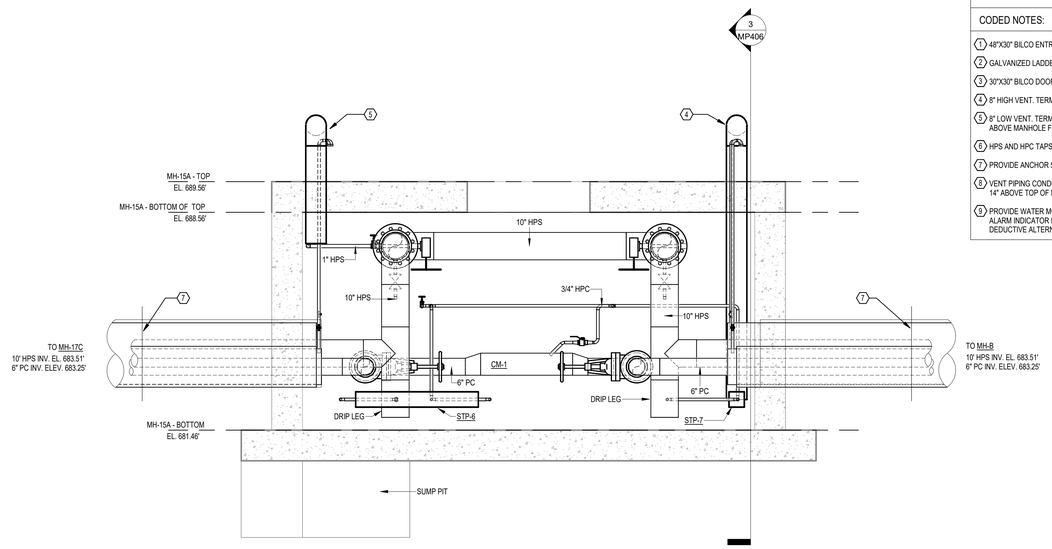


2 SECTION A - MH-15A - NEW WORK - PH 5
1/2" = 1'-0"

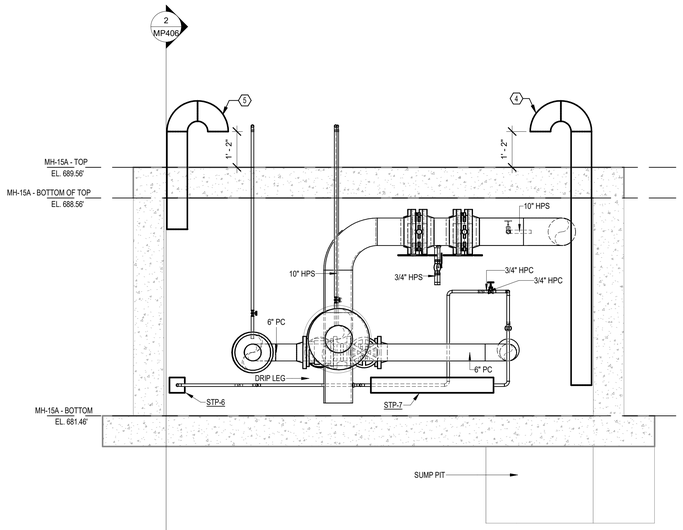


3 SECTION B - MH-15A - NEW WORK - PH 5
1/2" = 1'-0"

DRAWING NOTES:

1. CONTRACTOR TO FIELD-VERIFY EXISTING CONDITIONS AND BRING ANY KNOWN DISCREPANCIES TO THE ATTENTION OF THE COR FOR REVIEW AND CONTRACT RESOLUTION.
2. ALL PIPING IN MANHOLE SHOWN AS INSIDE CLEAR DIMENSIONS. INSULATION FOR PIPING SHOWN AT MAN HOLE PENETRATION FOR ILLUSTRATION PURPOSES ONLY. SEE SPECS FOR INSULATION REQUIREMENTS.
3. ALL STEAM AND CONDENSATE PIPING THAT WILL REQUIRE FUTURE ISOLATION MUST BE PROVIDED WITH DOUBLE BLOCK AND BLEED ISOLATION VALVES.

CODED NOTES:

1. 48"X30" BILCO ENTRY DOOR BY OTHERS.
2. GALVANIZED LADDER BOLTED TO WALL WITH EXTENSION BAR ON TOP BY OTHERS.
3. 30"X30" BILCO DOORS FOR SUMP PIT ACCESS BY OTHERS.
4. 8" HIGH VENT. TERMINATE WITH GOOSENECK 14" ABOVE MANHOLE TOP.
5. 8" LOW VENT. TERMINATE WITH GOOSENECK 14" ABOVE MANHOLE TOP. TERMINATE BOTTOM OF PIPE 12" ABOVE MANHOLE FLOOR.
6. HPS AND HPC TAPS FOR FUTURE SUMP PUMPS.
7. PROVIDE ANCHOR 5' OUTSIDE OF MANHOLE. SEE SITE PLAN.
8. VENT PIPING CONDUIT THROUGH TOP OF MANHOLE. TERMINATE PIPING AT GOOSENECK WITH OPENING 14" ABOVE TOP OF MANHOLE.
9. PROVIDE WATER MONITORING SYSTEM WITH LEAK/LEVEL GAUGE ABOVE GRADE. SEE MANHOLE ANALOG ALARM INDICATOR DETAIL ON SHEET M-501. SCOPE TO BE REMOVED FROM THE PROJECT AS A PART OF DEDUCTIVE ALTERNATE #1. SEE DEDUCTIVE ALTERNATE SCHEDULE ON SHEET M-101

N 0 1' 2' 4' 6'
1/2" = 1'-0"

| Revisions | Date |
|---|---|
| | |

CONSULTANT

ARCHITECT/ENGINEER OF RECORD

2014-2024 10TH ANNIVERSARY
Above Group
ENGINEERING | DESIGN | CONSULTING
SDVOSB
www.abovegroupinc.com
COA/CA Lic. No. 31120
305 East Dr., Suite H,
Melbourne, Florida 32904
PH: 321.345.9026

STAMP

STATE OF MARYLAND
GEOFFREY S. GRENDY
No. 39855
REGISTERED
PROFESSIONAL ENGINEER

Office of Construction and Facilities Management

VA U.S. Department of Veterans Affairs

| | | | |
|---|---|---|---|
| Drawing Title: MH-15A - MECH PLANS AND SECTIONS - NEW WORK - PHASE 5 | Phase: 100% CONSTRUCTION DOCUMENTS | Project Title: STEAM LINE REPLACEMENT | Project Number: 659-24-903 |
| | | | Building Number: |
| Approved: | | Location: SALISBURY VAMC | Drawing Number: MP406 |
| | | Issue Date: 09/27/2024 · Checked: GC · Drawn: DG | |

VA FORM 08 - 6231

Autodesk Docs://912305B - Salisbury Steam Line Replacement/912305B - VA Salisbury Stm Line Repl - R23_ME.rvt
9/27/2024 11:11:34 AM

## DRAWING NOTES:

1. CONTRACTOR TO FIELD-VERIFY EXISTING CONDITIONS AND BRING ANY KNOWN DISCREPANCIES TO THE ATTENTION OF THE COR FOR REVIEW AND CONTRACT RESOLUTION.
2. ALL PIPING IN MANHOLE SHOWN AS INSIDE CLEAR DIMENSIONS. INSULATION FOR PIPING SHOWN AT MAN HOLE PENETRATION FOR ILLUSTRATION PURPOSES ONLY. SEE SPECS FOR INSULATION REQUIREMENTS.
3. ALL STEAM AND CONDENSATE PIPING THAT WILL REQUIRE FUTURE ISOLATION MUST BE PROVIDED WITH DOUBLE BLOCK AND BLEED ISOLATION VALVES.

## CODED NOTES:

1. 48"X30" BILCO ENTRY DOOR BY OTHERS.
2. GALVANIZED LADDER BOLTED TO WALL WITH EXTENSION BAR ON TOP BY OTHERS.
3. 30"X30" BILCO DOORS FOR SUMP PIT ACCESS BY OTHERS.
4. 8" HIGH VENT. TERMINATE WITH GOOSENECK 14" ABOVE MANHOLE TOP.
5. 8" LOW VENT. TERMINATE WITH GOOSENECK 14" ABOVE MANHOLE TOP. TERMINATE BOTTOM OF PIPE 12" ABOVE MANHOLE FLOOR.
6. HPS AND HPC TAPS FOR FUTURE SUMP PUMPS.
7. PROVIDE ANCHOR 5' OUTSIDE OF MANHOLE. SEE SITE PLAN.
8. VENT PIPING CONDUIT THROUGH TOP OF MANHOLE. TERMINATE PIPING AT GOOSENECK WITH OPENING 14" ABOVE TOP OF MANHOLE.
9. PROVIDE WATER MONITORING SYSTEM WITH LEAK/LEVEL GAUGE ABOVE GRADE. SEE MANHOLE ANALOG ALARM INDICATOR DETAIL ON SHEET M-501. SCOPE TO BE REMOVED FROM THE PROJECT AS A PART OF DEDUCTIVE ALTERNATE #1. SEE DEDUCTIVE ALTERNATE SCHEDULE ON SHEET M-101

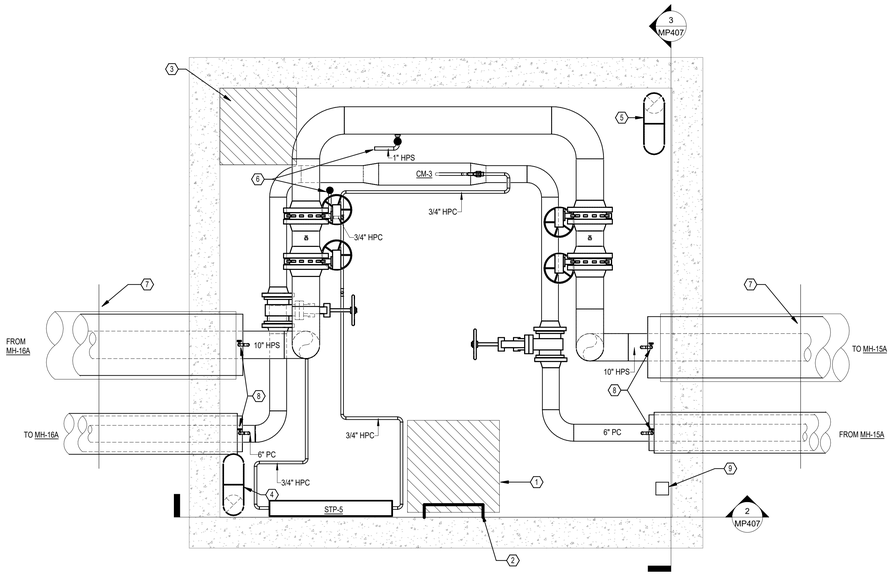


1 ENLARGED PLAN - MH-17C - NEW WORK - PH 5
1/2" = 1'-0"

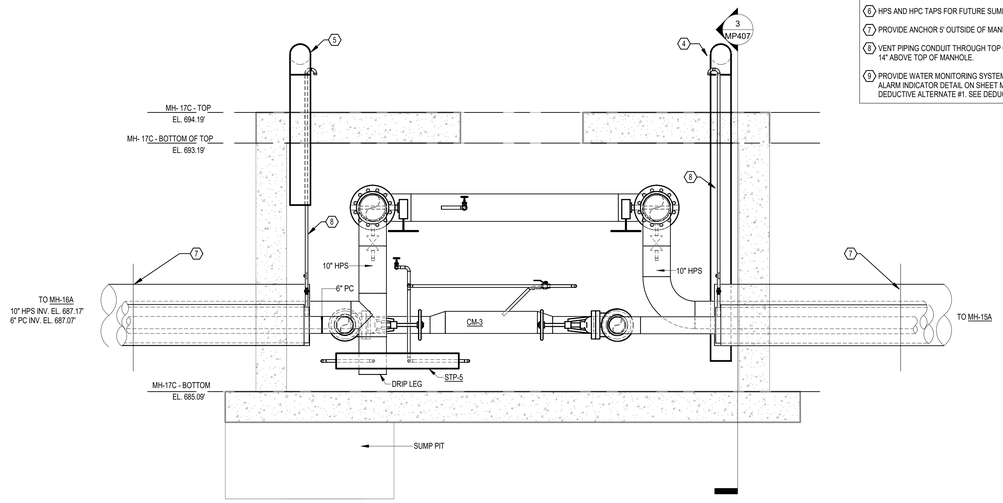


2 SECTION A - MH17C - NEW WORK - PH 5
1/2" = 1'-0"

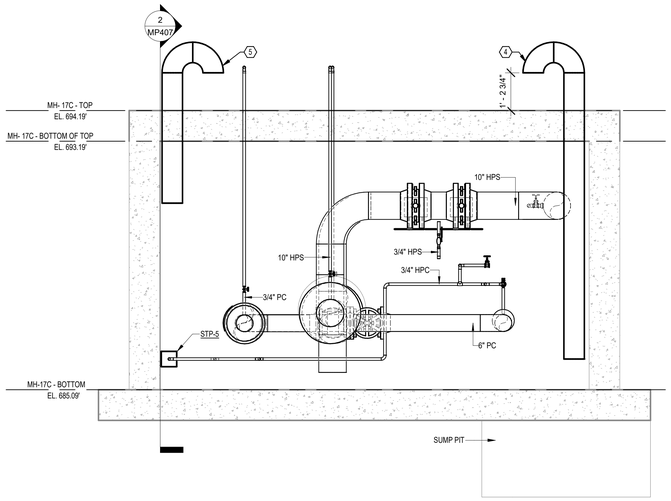


3 SECTION B - MH17C - NEW WORK - PH 5
1/2" = 1'-0"

N 0 1' 2' 4' 6'
1/2" = 1'-0"

| Revisions | Date |
|---|---|

CONSULTANT

ARCHITECT/ENGINEER OF RECORD

2014-2024 10TH ANNIVERSARY
Above Group
ENGINEERING | DESIGN | CONSULTING
www.abovegroupinc.com
COA/CA Lic. No. 31120
305 East Dr., Suite H,
Melbourne, Florida 32904
PH: 321.345.9026

STAMP

STATE OF MARYLAND
GEOFFREY S. CHENOWETH
No. 28825
REGISTERED
PROFESSIONAL ENGINEER

Office of Construction and Facilities Management

VA U.S. Department of Veterans Affairs

| | | | |
|---|---|---|---|
| Drawing Title: MH-17C- MECH PLANS AND SECTIONS - NEW WORK - PHASE 5 | Phase: 100% CONSTRUCTION DOCUMENTS | Project Title: STEAM LINE REPLACEMENT | Project Number: 659-24-903 |
| | | | Building Number: |
| Approved: | | Location: SALISBURY VAMC | Drawing Number: MP407 |
| | | Issue Date: 09/27/2024 · Checked: GC · Drawn: DG | |

VA FORM 08 - 6231

Autodesk Docs://012305b - Salisbury Steam Line Replacement/012305b - VA Salisbury Stm Line Repl - R23_ME.rvt
9/27/2024 11:11:40 AM

## DRAWING NOTES:

1. CONTRACTOR TO FIELD-VERIFY EXISTING CONDITIONS AND BRING ANY KNOWN DISCREPANCIES TO THE ATTENTION OF THE COR FOR REVIEW AND CONTRACT RESOLUTION.
2. ALL PIPING IN MANHOLE SHOWN AS INSIDE CLEAR DIMENSIONS. INSULATION FOR PIPING SHOWN AT MAN HOLE PENETRATION FOR ILLUSTRATION PURPOSES ONLY. SEE SPECS FOR INSULATION REQUIREMENTS.
3. ALL STEAM AND CONDENSATE PIPING THAT WILL REQUIRE FUTURE ISOLATION MUST BE PROVIDED WITH DOUBLE BLOCK AND BLEED ISOLATION VALVES.

## CODED NOTES:

1. 48"X30" BILCO ENTRY DOOR BY OTHERS.
2. GALVANIZED LADDER BOLTED TO WALL WITH EXTENSION BAR ON TOP BY OTHERS.
3. 30"X30" BILCO DOORS FOR SUMP PIT ACCESS BY OTHERS.
4. 8" HIGH VENT. TERMINATE WITH GOOSENECK 14" ABOVE MANHOLE TOP.
5. 8" LOW VENT. TERMINATE WITH GOOSENECK 14" ABOVE MANHOLE TOP. TERMINATE BOTTOM OF PIPE 12" ABOVE MANHOLE FLOOR.
6. PROVIDE ANCHOR 5' OUTSIDE OF MANHOLE. SEE SITE PLAN.
7. VENT PIPING CONDUIT THROUGH TOP OF MANHOLE. TERMINATE PIPING AT GOOSENECK WITH OPENING 14" ABOVE TOP OF MANHOLE.
8. PROVIDE WATER MONITORING SYSTEM WITH LEAK/LEVEL GAUGE ABOVE GRADE. SEE MANHOLE ANALOG ALARM INDICATOR DETAIL ON SHEET M-501. SCOPE TO BE REMOVED FROM THE PROJECT AS A PART OF DEDUCTIVE ALTERNATE #1. SEE DEDUCTIVE ALTERNATE SCHEDULE ON SHEET M-101

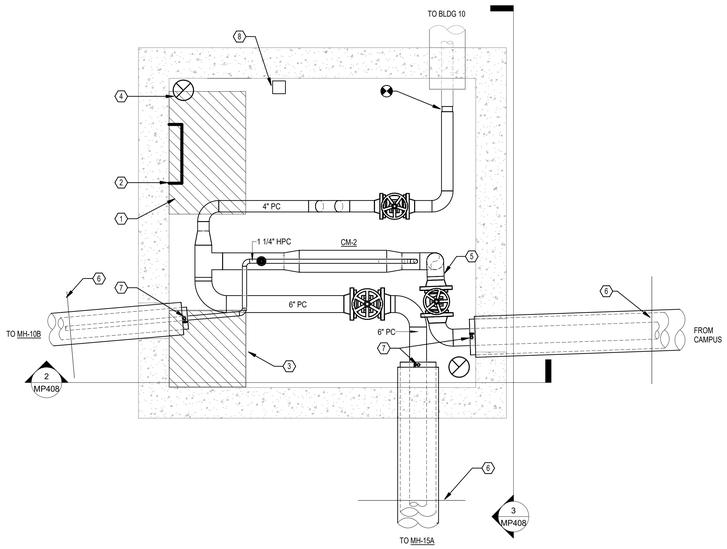


1 ENLARGED PLAN - MH-15B - NEW WORK - PH 6
1/2" = 1'-0"

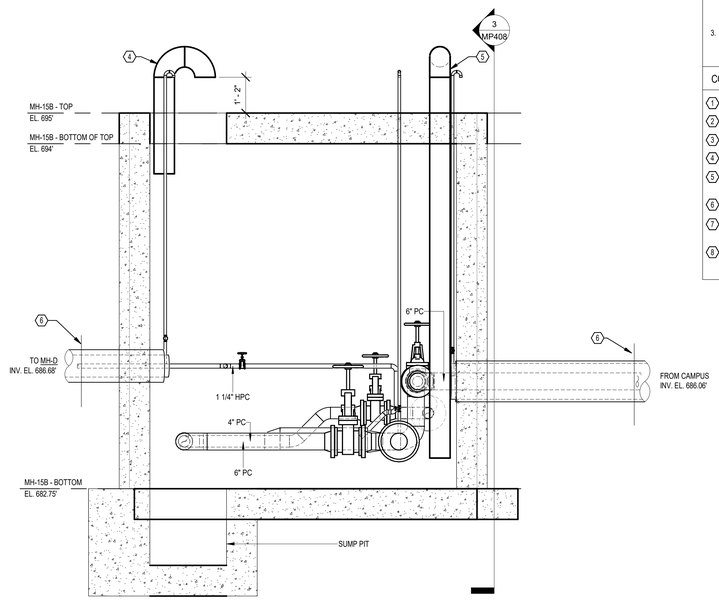


2 SECTION A - MH-15B - NEW WORK - PH 6
1/2" = 1'-0"

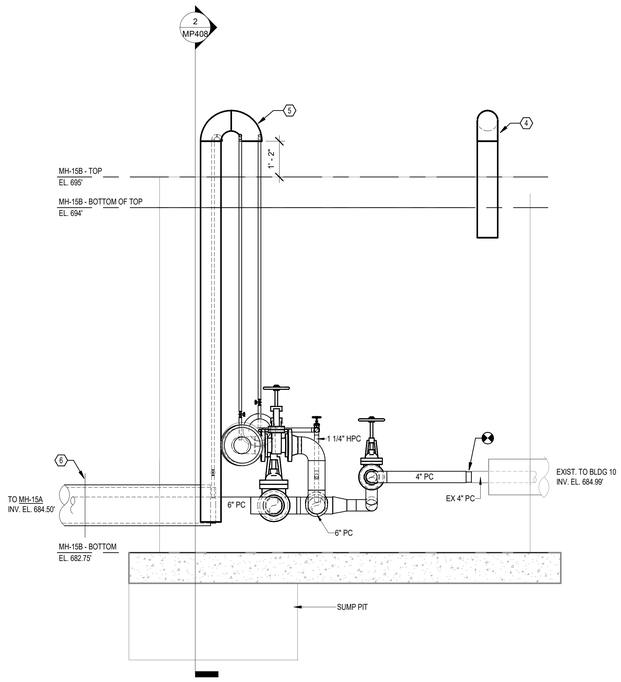


3 SECTION B - MH-15B - NEW WORK - PH 6
1/2" = 1'-0"

N 0 1' 2' 4' 6'
1/2" = 1'-0"

| Revisions | Date |
|---|---|

CONSULTANT

ARCHITECT/ENGINEER OF RECORD

2014-2024 10TH ANNIVERSARY Above Group ENGINEERING | DESIGN | CONSULTING
SDVOSB SVE
www.abovegroupinc.com
COA/CA Lic. No. 31120
305 East Dr., Suite H,
Melbourne, Florida 32904
PH: 321.345.9026

STAMP

STATE OF MARYLAND GEOFFREY S. CHENOWETH NO. 28825 REGISTERED PROFESSIONAL ENGINEER

Office of Construction and Facilities Management

VA U.S. Department of Veterans Affairs

| Drawing Title | Phase | Project Title | Project Number |
|---|---|---|---|
| MH-15B - MECH PLANS AND SECTIONS - NEW WORK - PHASE 6 | 100% CONSTRUCTION DOCUMENTS | STEAM LINE REPLACEMENT | 659-24-903 |
| | | | Building Number |
| Approved: | | Location: SALISBURY VAMC | Drawing Number |
| | | Issue Date: 09/27/2024 · Checked: GC · Drawn: DG | MP408 |

VA FORM 08 - 6231

Autodesk Docs://9123056 - Salisbury Steam Line Replacement/9123056 - VA Salisbury Stm Line Repl - R23_ME.rvt
9/27/2024 11:11:43 AM

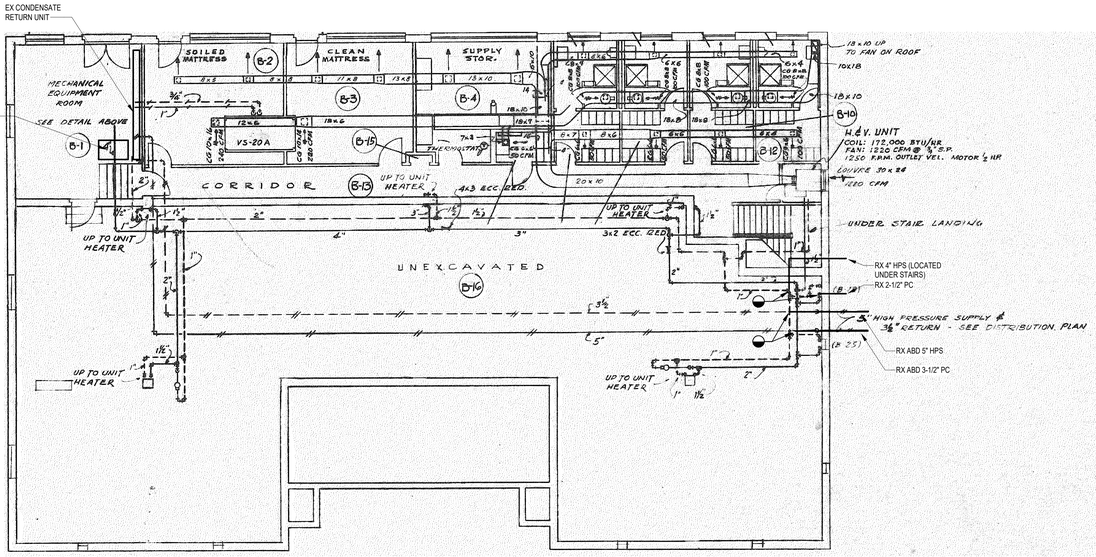


1 EXISTING CONDITIONS - BUILDING 16 - DEMOLITION
1/8" = 1'-0"

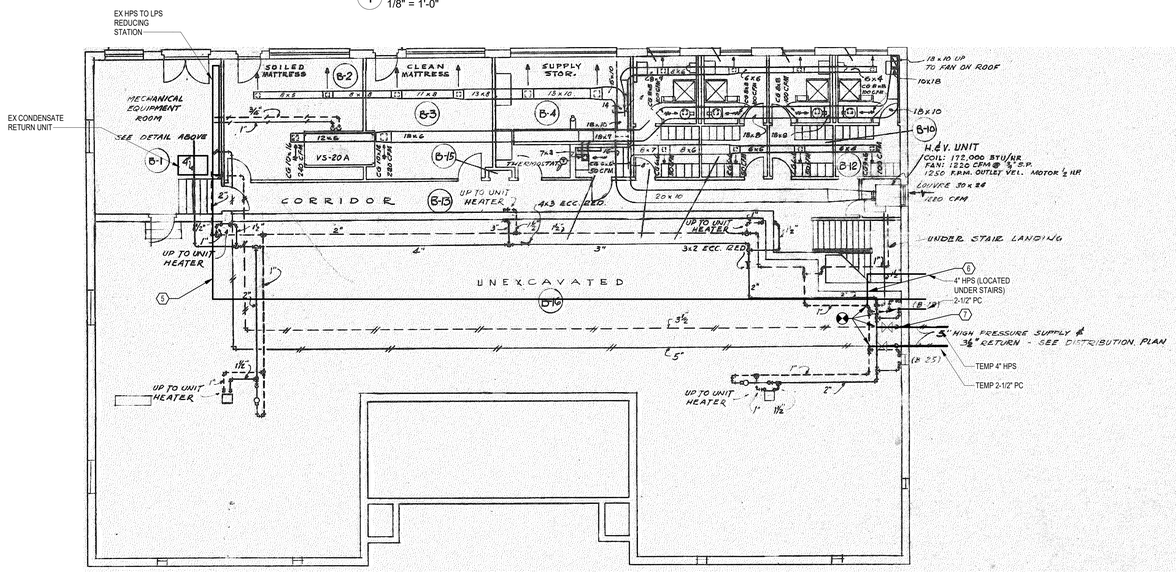


3 EXISTING CONDITIONS - BUILDING 16 - NEW WORK
1/8" = 1'-0"

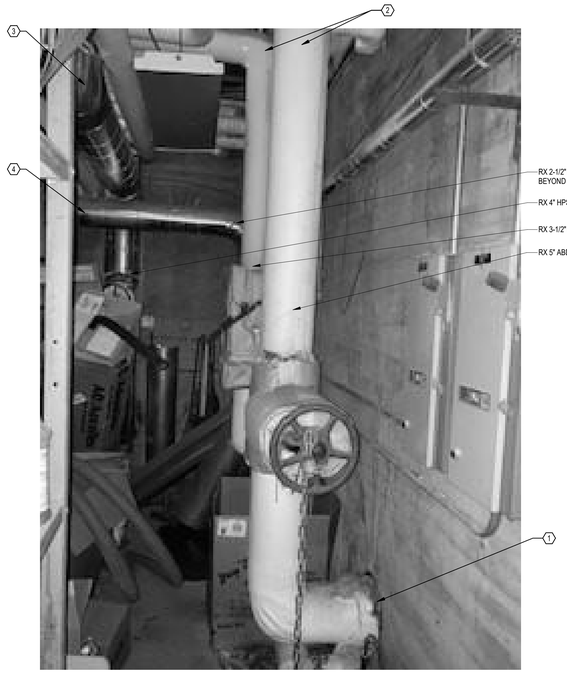


2 EXISTING CONDITIONS - BUILDING 16
N.T.S.

DRAWING NOTES:

1. CONTRACTOR TO FIELD-VERIFY EXISTING CONDITIONS AND BRING ANY KNOWN DISCREPANCIES TO THE ATTENTION OF THE COR FOR REVIEW AND CONTRACT RESOLUTION.
2. ALL STEAM AND CONDENSATE PIPING THAT WILL REQUIRE FUTURE ISOLATION MUST BE PROVIDED WITH DOUBLE BLOCK AND BLEED ISOLATION VALVES.

CODED NOTES:

1. PATCH EXISTING WALL PER STRUCTURAL DETAILS. PREPARE WALL WITH NEW SLEEVES FOR TEMPORARY HPS AND PC.
2. REMOVE/ABATE EXISTING ABANDONED HPS AND PC BACK TO A POINT NO LESS THAN 8 FEET FROM WALL PENETRATION OR TO THE NEXT VALVE. WHICHEVER IS CLOSER. CAP REMAINING ABANDONED PIPING.
3. POINT OF RECONNECTION FOR NEW WORK HPS.
4. POINT OF RECONNECTION FOR PC.
5. ROUTE 1" HPC FROM BUILDING ENTRANCE TO EXISTING CONDENSATE MANAGEMENT SYSTEM. CONNECT PIPING TO EXISTING HIGH PRESSURE CONDENSATE PIPING.
6. PROVIDE NEW STP-14 FOR INCOMING STEAM LINE AFTER ENTERING THE BUILDING. CONNECT 3/4" HIGH PRESSURE CONDENSATE PIPING DOWN STREAM OF STEAM TRAP TO 1" NEW HIGH PRESSURE CONDENSATE ENTERING THE BUILDING.
7. PROVIDE NEW TEMPORARY STP-TEMP-2 FOR INCOMING TEMPORARY STEAM LINE AFTER ENTERING THE BUILDING. CONNECT 3/4" HIGH PRESSURE CONDENSATE PIPING DOWN STREAM OF STEAM TRAP TO NEAREST HIGH PRESSURE CONDENSATE PIPING.

N 0 4' 8' 16' 24'
1/8" = 1'-0"

| Revisions | Date |
|---|---|

CONSULTANT

ARCHITECT/ENGINEER OF RECORD
2014-2024 10TH ANNIVERSARY
Above Group
ENGINEERING | DESIGN | CONSULTING
www.abovegroupinc.com
COA/CA Lic. No. 31120
305 East Dr., Suite H,
Melbourne, Florida 32904
PH: 321.345.9026

STAMP
STATE OF MARYLAND
GEOFFREY S. CHEADOR
No. 38825
REGISTERED
PROFESSIONAL ENGINEER

Office of Construction and Facilities Management
VA U.S. Department of Veterans Affairs

| | | | |
|---|---|---|---|
| Drawing Title: B16 - MECH PLANS AND PHOTOS | Phase: 100% CONSTRUCTION DOCUMENTS | Project Title: STEAM LINE REPLACEMENT | Project Number: 659-24-903 |
| Approved: | | | Building Number: |
| | | Location: SALISBURY VAMC | Drawing Number: MP409 |
| | | Issue Date: 09/27/2024 / Checked: GC | Drawn: DG |

VA FORM 08 - 6231

Autodesk Docs://B123056 - Salisbury Steam Line Replacement/B123056 - VA Salisbury Stm Line Repl - R23_ME.rvt
9/27/2024 11:11:44 AM

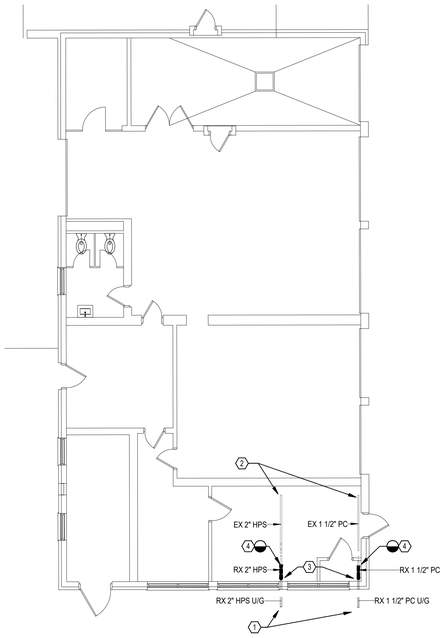


3 MECHANICAL - DEMOLITION - BUILDING 17
1/8" = 1'-0"

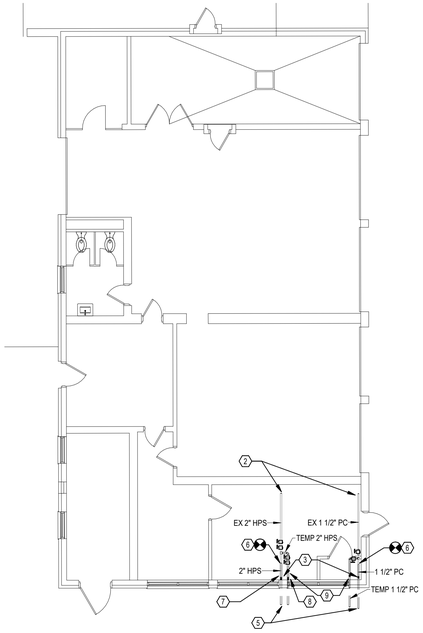


1 MECHANICAL - NEW WORK - BUILDING 17
1/8" = 1'-0"

2 EXISTING CONDITIONS - BUILDING 17
N.T.S.

DRAWING NOTES:

1. CONTRACTOR TO FIELD-VERIFY EXISTING CONDITIONS AND BRING ANY KNOWN DISCREPANCIES TO THE ATTENTION OF THE COR FOR REVIEW AND CONTRACT RESOLUTION.
2. ALL STEAM AND CONDENSATE PIPING THAT WILL REQUIRE FUTURE ISOLATION MUST BE PROVIDED WITH DOUBLE BLOCK AND BLEED ISOLATION VALVES.

CODED NOTES:

1. REFER TO 1/MD104 FOR DISTRIBUTION PIPING WORK OUTSIDE OF BUILDING 17.
2. EXISTING 2" HIGH PRESSURE STEAM AND 1 1/2" PUMPED CONDENSATE TO BUILDING 17 MECHANICAL ROOM.
3. PATCH EXISTING PENETRATION PER STRUCTURAL DETAILS. PREPARE WALL WITH NEW SLEEVES FOR NEW HPS AND PC.
4. REMOVE AND ABATE EXISTING HIGH PRESSURE STEAM AND PUMPED CONDENSATE PIPING. PREPARE EXISTING PIPING FOR NEW CONNECTIONS.
5. REFER TO 1/MP104 FOR DISTRIBUTION PIPING WORK OUTSIDE OF BUILDING 17.
6. CONNECT NEW 2" HIGH PRESSURE STEAM AND 1-1/2" PUMPED CONDENSATE TO EXISTING PIPING.
7. PROVIDE NEW STP-13 FOR INCOMING STEAM LINE AFTER ENTERING THE BUILDING. CONNECT 3/4" HIGH PRESSURE CONDENSATE PIPING DOWN STREAM OF STEAM TRAP TO NEAREST HIGH PRESSURE CONDENSATE PIPING. FIELD VERIFY EXACT LOCATION ACCOUNT FOR 150' OF PIPING IN INTIAL BID.
8. PROVIDE NEW TEMPORARY STP-TEMP-1 FOR INCOMING TEMPORARY STEAM LINE AFTER ENTERING THE BUILDING. CONNECT 3/4" HIGH PRESSURE CONDENSATE PIPING DOWN STREAM OF STEAM TRAP TO TEMPORARY PUMPED CONDENSATE PIPING.
9. CONNECT TEMPORARY 2" HIGH PRESSURE STEAM AND TEMPORARY 1-1/2" PUMPED CONDENSATE PIPING TO EXISTING LINES. SEE SITE PLANS AND PHASING PLANS FOR PHASING REQUIREMENTS. PROVIDE DOUBLE BLOCK AND BLEED VALVES ON ALL STEAM PIPING CONNECTIONS THAT REQUIRE ISOLATION. PROVIDE SINGLE ISOLATION VALVES ON CONDENSATE PIPING THAT REQUIRES ISOLATION.

N 0 4' 8' 16' 24'
1/8" = 1'-0"

| Revisions | Date |
|---|---|

CONSULTANT

ARCHITECT/ENGINEER OF RECORD
2014-2024 10TH ANNIVERSARY Above Group ENGINEERING | DESIGN | CONSULTING
SDVOSB
www.abovegroupinc.com
COA/CA Lic. No. 31120
305 East Dr., Suite H,
Melbourne, Florida 32904
PH: 321.345.9026

STAMP
STATE OF MARYLAND GEOFFREY S. CHENOWETH No. 38853 REGISTERED PROFESSIONAL ENGINEER

Office of Construction and Facilities Management
VA U.S. Department of Veterans Affairs

Drawing Title: B17 - MECH PLANS AND PHOTOS
Phase: 100% CONSTRUCTION DOCUMENTS
Project Title: STEAM LINE REPLACEMENT
Project Number: 659-24-903
Building Number:
Approved:
Location: SALISBURY VAMC
Issue Date: 09/27/2024
Checked: GC
Drawn: DG
Drawing Number: MP410

VA FORM 08 - 6231

Autodesk Docs://9123056 - Salisbury Steam Line Replacement/9123056 - VA Salisbury Stm Line Rplc - R23_ME.rvt
9/27/2024 11:11:45 AM

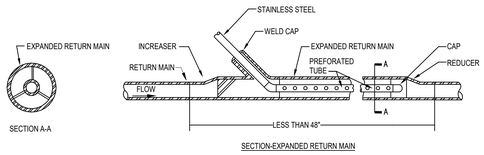


## 1 HIGH PRESSURE STEAM TRAP DISCHARGE DETAIL
N.T.S.

CONTRACTOR TO COORDINATE WITH PIPING MANUFACTURER FOR SCOPE OF ANCHOR

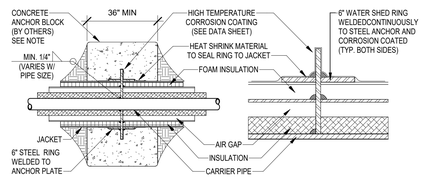


STEEL PIPE ANCHOR SPECIFICATIONS

ANCHOR PLATES ARE 1/2" STEEL CENTERED ON CONDUIT WITH DIMENSIONS 1 1/2" LARGER HORIZONTALLY AND 1 1/2" LARGER VERTICALLY THAN NOMINAL HDPE JACKET DIAMETER. THE CONCRETE ANCHOR BLOCK SHOULD EXTEND A MINIMUM OF 12" INTO THE TRENCH WALL, UNDISTURBED EARTH OR COMPACTED BACK FILL (MINIMUM 95 PROCTOR) IN ALL DIRECTIONS, WITH A MINIMUM OF 18" IN LENGTH ON BOTH SIDES OF THE ANCHOR PLATE. THE ANCHOR BLOCK SIZE IS BASED ON THE SOIL CONDITIONS AND THE FORCES EXERTED ON THE ANCHOR. SIZING OF THE ANCHOR BLOCK IS BY OTHERS. ANCHOR BLOCK SIZING IS THE RESPONSIBILITY OF THE ENGINEER OF RECORD.

ANCHOR DETAIL
SCALE: NONE

## 2 ANCHOR (STEAM) DETAIL
N.T.S.

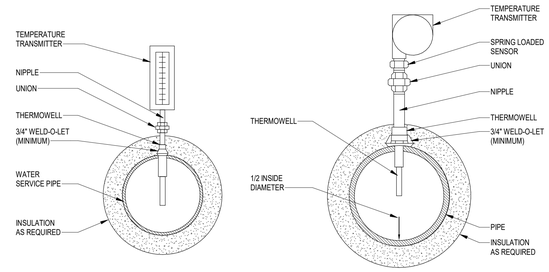


## 3 INSTALLATION OF THERMOMETER WELLS
N.T.S.

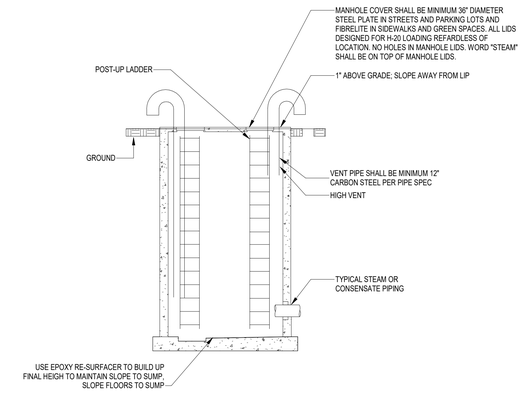


## 4 STEAM MANHOLE VENTING CONNECTIONS
N.T.S.

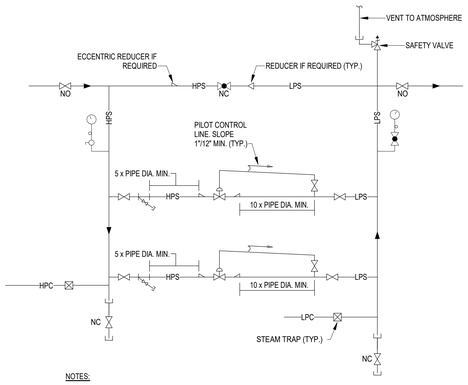


NOTES:

1. SEE FLOOR PLANS FOR PIPE SIZES.
2. INSTALL VALVES AS RECOMMENDED BY MANUFACTURER.
3. BYPASS SHALL BE SIZED TO MEET THE CAPACITY OF THE COMBINED CAPACITY OF THE TWO PRVs.
4. PROVIDE NECESSARY UNIONS FOR THE REMOVAL OF VALVE WITH THREADED CONNECTIONS.
5. SLOPE THE PILOT CONTROL LINE FROM THE PRV AS INDICATED.
6. PROVIDE MINIMUM PIPE DIAMETERS AS INDICATED UPSTREAM AND DOWNSTREAM OF PRVs.
7. ALL UPSTREAM REDUCERS SHALL BE ECCENTRIC IF REQUIRED.

## 5 STEAM PRESSURE REDUCING STATION DETAIL
N.T.S.

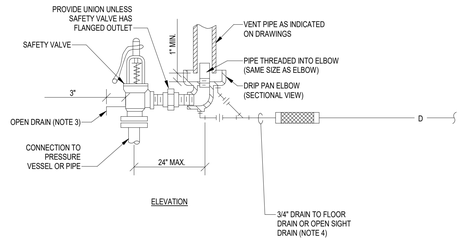


NOTES:

1. PROVIDE 10 PIPE DIAMETERS OF STRAIGHT PIPE RUN UPSTREAM OF SAFETY VALVE.
2. UNLESS OTHERWISE SHOWN ON THE DRAWINGS, SIZE THE VENT PIPE SO THAT STEAM IS NOT BLOWN OUT AT THE VENT PIPE ENTRANCE. UTILIZE THE CALCULATION METHOD CONTAINED IN ANSI B31.1. POWER PIPING CODE. APPENDIX II.
3. VENT PIPE SHALL TERMINATE 6' MIN. ABOVE FINISHED ROOF.
4. DISCHARGE OF DRAIN MUST BE DIRECTED AWAY FROM PLATFORMS OR OTHER AREAS WHICH PERSONNEL MAY OCCUPY.
5. DO NOT CONNECT ANY OTHER DRAIN TO THE DRIP PAN ELBOW DRAIN PIPE.

## 6 STEAM SAFETY VALVE DETAIL
N.T.S.

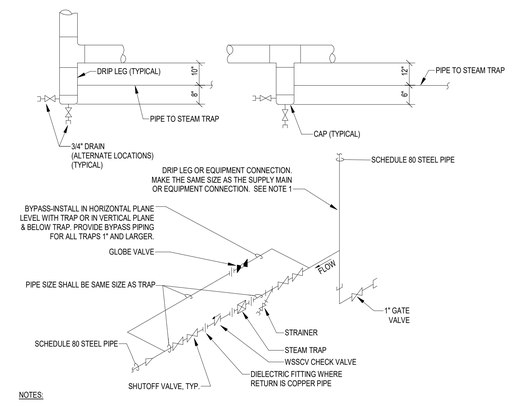


NOTES:

1. ALL DRIP POINTS ON STEAM MAINS SHALL BE PROVIDED WITH A 12" MINIMUM HIGH DRIP LEG FROM BOTTOM OF STEAM MAIN TO TRAP INLET. DRIP LEG SHALL HAVE 6" SCALE POCKET BELOW TRAP INLET.
2. DRIP POCKET PIPE SIZE SAME AS STEAM MAIN.
3. UTILIZE THIS TYPE OF STEAM TRAP FOR STEAM MAINS, STEAM BRANCHES, AND STEAM CONDENSATE FLASH TANKS OR AS INDICATED ON DRAWINGS. REFER TO STEAM TRAP SCHEDULE FOR TRAP TYPE.

## 7 STEAM TRAP ASSEMBLY DETAIL
N.T.S.

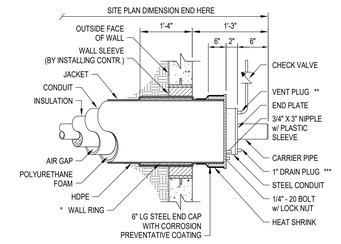


NOTES :

* WALL RING INCREASE OUTSIDE DIAMETER OF HDPE JACKET BY 1/2".

** CONTRACTOR TO VENT TO ATMOSPHERE TO PREVENT CONDUIT FLOODING IN ACCORDANCE WITH CONTRACT DRAWINGS IN THE EVENT THE VAULT FLOODS. VENT MUST BE OPEN AND INSTALLED PRIOR TO STARTING SYSTEM. INSTALL CHECK VALVE TO PREVENT WATER INTRUSION.

*** DRAIN SHOULD BE OPENED DURING START-UP TO ALLOW CONDUIT TO DRAIN.

## 8 WALL PENETRATION DETAIL (END CAP)
N.T.S.

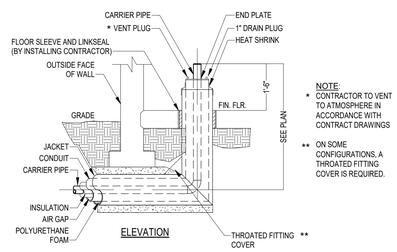


NOTE:
* CONTRACTOR TO VENT TO ATMOSPHERE IN ACCORDANCE WITH CONTRACT DRAWINGS

** ON SOME CONFIGURATIONS, A THROATED FITTING COVER IS REQUIRED.

BUILDING RISER DETAIL
SCALE: NONE

## 9 BUILDING RISER (STEAM) DETAIL
N.T.S.

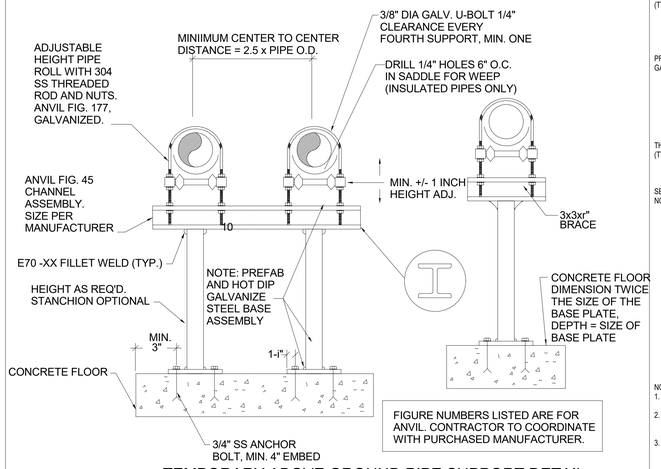


FIGURE NUMBERS LISTED ARE FOR ANVIL. CONTRACTOR TO COORDINATE WITH PURCHASED MANUFACTURER.

## 10 TEMPORARY ABOVE GROUND PIPE SUPPORT DETAIL
N.T.S.

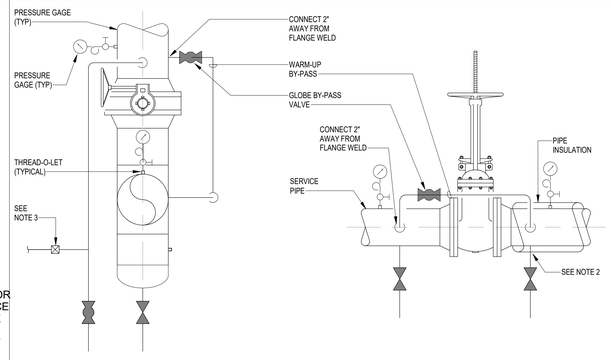


NOTES:

1. PROVIDE 2" BY-PASS, DRAIN AND VENT VALVES, AND PRESSURE GAGE FOR ALL 120S, PC, & HTHW VALVES 8" AND LARGER.
2. INSTALL DRAIN, VENT, GUAGE, AND GENERAL VALVES SO THAT THEY ARE CLEAR OF ALL PIPING INSULATION AND FREE FROM INTERFERENCE DURING OPERATION.
3. STEAM SHUT-OFF VALVES SHALL ONLY BE INSTALLED IN HORIZONTAL PIPING. STEAM VALVES SHALL BE INSTALLED IN THE VERTICAL ONLY IF REQUIRED ON THE CONTRACT DRAWINGS. VALVES IN THE VERTICAL WILL REQUIRE THE INSTALLATION OF A STEAM TRAP AS SHOWN IN THIS DETAIL (SEE DETAIL 7, THIS SHEET).

## 11 VALVE BY-PASS CONNECTIONS DETAIL
N.T.S.

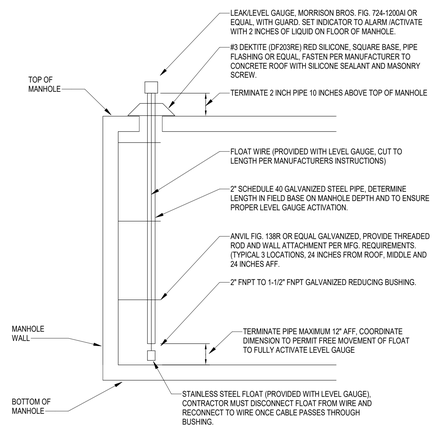


## 12 MANHOLE ANALOG ALARM INDICATOR DETAIL
N.T.S.

| Revisions | Date |
|---|---|

CONSULTANT

ARCHITECT/ENGINEER OF RECORD

2014-2024 10TH ANNIVERSARY Above Group ENGINEERING | DESIGN | CONSULTING
www.abovegroupinc.com
COA/CA Lic. No. 31120
305 East Dr., Suite H, Melbourne, Florida 32904
PH: 321.345.9026

STAMP

STATE OF MARYLAND — GEOFFREY S. CHEADLE — No. 28825 — REGISTERED PROFESSIONAL ENGINEER

Office of Construction and Facilities Management

VA U.S. Department of Veterans Affairs

| | | | |
|---|---|---|---|
| Drawing Title: MECHANICAL DETAILS | Phase: 100% CONSTRUCTION DOCUMENTS | Project Title: STEAM LINE REPLACEMENT | Project Number: 659-24-903 |
| | | | Building Number: |
| Approved: | | Location: SALISBURY VAMC | Drawing Number: M-501 |
| | | Issue Date: 09/27/2024 · Checked: GC · Drawn: DG | |

VA FORM 08 - 6231

Autodesk Docs://012306 - Salisbury Steam Line Replacement/012306 - VA Salisbury Stm Line Repl - R23_ME.rvt 9/27/2024 11:11:47 AM

# EXISTING DETAILS NOTE

THE BELOW DETAILS ARE FROM THE ORIGINAL STEAM DISTRIBUTION DRAWINGS DATED MAY 18, 1965. THESE DETAILS ARE SHOWN FOR INFORMATIONAL PURPOSES ONLY TO ASSIST IN THE DEMOLITION. ALL EXISTING CONDITIONS MUST BE FIELD VERIFIED.

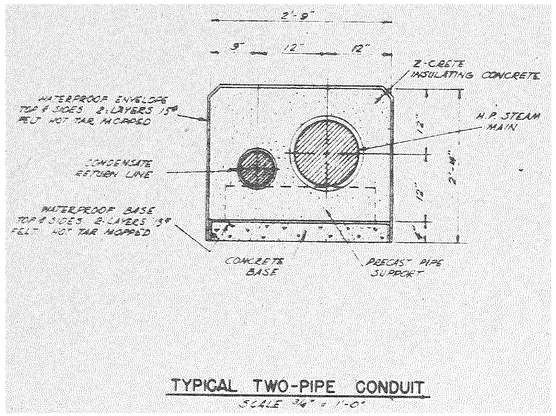


TYPICAL TWO-PIPE CONDUIT
SCALE 3/4" = 1'-0"

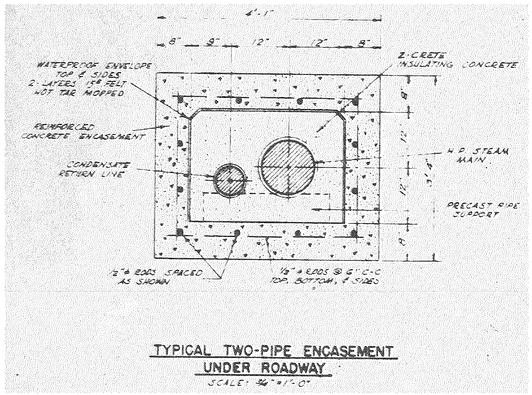


TYPICAL TWO-PIPE ENCASEMENT UNDER ROADWAY
SCALE: 3/4" = 1'-0"

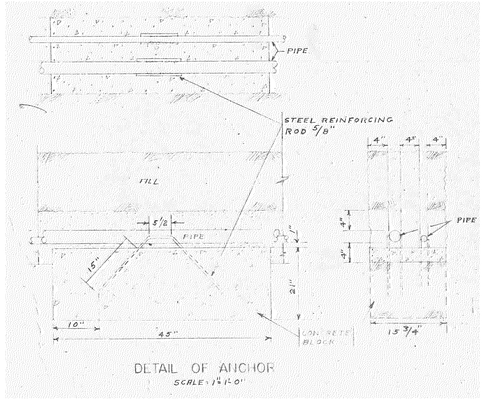


DETAIL OF ANCHOR
SCALE: 1/4" = 1'-0"

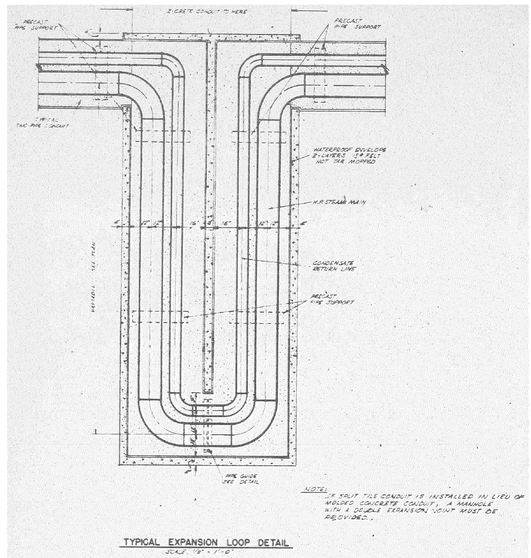


TYPICAL EXPANSION LOOP DETAIL
SCALE: 1/4" = 1'-0"

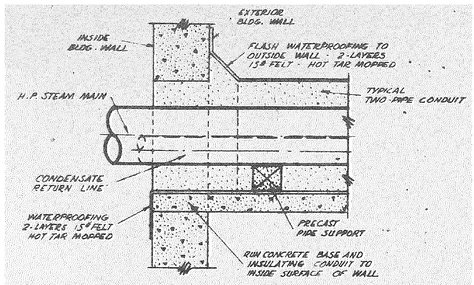


TYPICAL DETAIL OF FLASHING ENTRANCE TO BUILDINGS
SCALE: 3/4" = 1'-0"

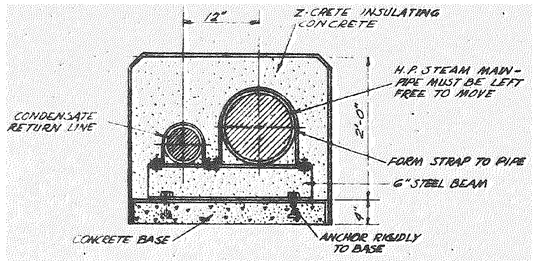


TYPICAL GUIDE DETAIL
SCALE: 3/4" = 1'-0"

| Revisions | Date |
|---|---|

CONSULTANT

ARCHITECT/ENGINEER OF RECORD

2014-2024 10TH ANNIVERSARY
Above Group
ENGINEERING | DESIGN | CONSULTING
SDVOSB
www.abovegroupinc.com
COA/CA Lic. No. 31120
305 East Dr., Suite H,
Melbourne, Florida 32904
PH: 321.345.9026

STAMP

STATE OF MARYLAND
GEORGE FREY S. CHENOWETH
No. 28825
REGISTERED PROFESSIONAL ENGINEER

Office of Construction and Facilities Management

VA U.S. Department of Veterans Affairs

| | | | |
|---|---|---|---|
| Drawing Title: MECHANICAL EXISTING CONDITIONS DETAILS | Phase: 100% CONSTRUCTION DOCUMENTS | Project Title: STEAM LINE REPLACEMENT | Project Number: 659-24-903 |
| Approved: | | | Building Number: |
| | | Location: SALISBURY VAMC | Drawing Number: M-502 |
| | | Issue Date: 09/27/2024 · Checked: GC · Drawn: DG | |

VA FORM 08 - 6231

Autodesk Docs://012305G - Salisbury Steam Line Replacement/012305G - VA Salisbury Stm Line Repl - R23_ME.rvt 9/27/2024 11:11:48 AM

## STEAM TRAP SCHEDULE

| UNIT NO. | GENERAL LOCATION/DESCRIPTION | TRAP TYPE | CONNECTOR SIZE (IN.) | INLET PRESSURE (PSIG) | | STEAM TEMP (°F) | | DIFFERENTIAL PRESSURE (PSID) | | MAX FLOW RATE FLOW RATE (LB/HR) | | | BASIS OF DESIGN MANUFACTURER | BASIS OF DESIGN MODEL | REMARKS |
|---|---|---|---|---|---|---|---|---|---|---|---|---|---|---|---|
| | | | | OPERATING | MAX | OPERATING | MAX | NORMAL OPERATION | MAX | OPERATING FLOW | SAFETY FACTOR | DESIGN FLOW | | | |
| STP-1 | MH-17B | INVERTED BUCKET | 3/4 | 90 | 134 | 331 | 357 | 35 | 45 | 135 | 3 | 405 | WATSON MCDANIEL | USIB450-150 | PROVIDE TRAP WITH UNIVERSAL CONNECTION |
| STP-2 | MH-17B | INVERTED BUCKET | 3/4 | 90 | 134 | 331 | 357 | 35 | 45 | 24 | 3 | 72 | WATSON MCDANIEL | USIB450-150 | PROVIDE TRAP WITH UNIVERSAL CONNECTION |
| STP-3 | MH-16A | INVERTED BUCKET | 3/4 | 90 | 134 | 331 | 357 | 35 | 45 | 120 | 3 | 360 | WATSON MCDANIEL | USIB450-150 | PROVIDE TRAP WITH UNIVERSAL CONNECTION |
| STP-4 | MH-16A | INVERTED BUCKET | 3/4 | 90 | 134 | 331 | 357 | 35 | 45 | 12 | 3 | 36 | WATSON MCDANIEL | USIB450-150 | PROVIDE TRAP WITH UNIVERSAL CONNECTION |
| STP-5 | MH-17C | INVERTED BUCKET | 3/4 | 90 | 134 | 331 | 357 | 35 | 45 | 100 | 3 | 300 | WATSON MCDANIEL | USIB450-150 | PROVIDE TRAP WITH UNIVERSAL CONNECTION |
| STP-6 | MH-15A | INVERTED BUCKET | 3/4 | 90 | 134 | 331 | 357 | 35 | 45 | 192 | 3 | 576 | WATSON MCDANIEL | USIB450H-200 | PROVIDE TRAP WITH UNIVERSAL CONNECTION |
| STP-7 | MH-15A | INVERTED BUCKET | 3/4 | 90 | 134 | 331 | 357 | 35 | 45 | 39 | 3 | 117 | WATSON MCDANIEL | USIB450-150 | PROVIDE TRAP WITH UNIVERSAL CONNECTION |
| STP-8 | MH-10B | INVERTED BUCKET | 3/4 | 90 | 134 | 331 | 357 | 35 | 45 | 150 | 3 | 450 | WATSON MCDANIEL | USIB450H-200 | PROVIDE TRAP WITH UNIVERSAL CONNECTION |
| STP-9 | MH-10B | INVERTED BUCKET | 3/4 | 90 | 134 | 331 | 357 | 35 | 45 | 132 | 3 | 396 | WATSON MCDANIEL | USIB450-150 | PROVIDE TRAP WITH UNIVERSAL CONNECTION |
| STP-10 | MH-10B | INVERTED BUCKET | 3/4 | 90 | 134 | 331 | 357 | 35 | 45 | 15 | 3 | 45 | WATSON MCDANIEL | USIB450-150 | PROVIDE TRAP WITH UNIVERSAL CONNECTION |
| STP-11 | MH-10B | INVERTED BUCKET | 3/4 | 90 | 134 | 331 | 357 | 35 | 45 | 237 | 3 | 711 | WATSON MCDANIEL | USIB450H-200 | PROVIDE TRAP WITH UNIVERSAL CONNECTION |
| STP-12 | MH-17B | INVERTED BUCKET | 3/4 | 90 | 134 | 331 | 357 | 35 | 45 | 10 | 3 | 30 | WATSON MCDANIEL | USIB450-150 | PROVIDE TRAP WITH UNIVERSAL CONNECTION |
| STP-13 | BUILDING 17 | INVERTED BUCKET | 3/4 | 90 | 134 | 331 | 357 | 35 | 45 | 8 | 3 | 24 | WATSON MCDANIEL | USIB450-150 | PROVIDE TRAP WITH UNIVERSAL CONNECTION |
| STP-14 | BUILDING 16 | INVERTED BUCKET | 3/4 | 90 | 134 | 331 | 357 | 35 | 45 | 38 | 3 | 144 | WATSON MCDANIEL | USIB450-150 | PROVIDE TRAP WITH UNIVERSAL CONNECTION |
| STP-TEMP-1 | TEMP PIPING, BUILDING 17 | INVERTED BUCKET | 3/4 | 90 | 134 | 331 | 357 | 35 | 45 | 10 | 3 | 30 | WATSON MCDANIEL | USIB450-150 | PROVIDE TRAP WITH UNIVERSAL CONNECTION |
| STP-TEMP-2 | TEMP PIPING, BUILDING 16 | INVERTED BUCKET | 3/4 | 90 | 134 | 331 | 357 | 35 | 45 | 40 | 3 | 120 | WATSON MCDANIEL | USIB450-150 | PROVIDE TRAP WITH UNIVERSAL CONNECTION |

## SPARGE TUBE / FLASH ARRESTOR SCHEDULE

| MARK | LOCATION | INLET / OUTLET CONNECTOIN SIZE (IN) | INLET / OUTLET CONNECTION TYPE | SHELL DIAMETER (IN) | HP INLET CONNECTION SIZE (IN) | HP INLET CONNECTION TYPE | WEIGHT (LBS) | STEAM TRAP INLET PRESSURE (PSIG) | MANUFACTURER | MODEL CODE |
|---|---|---|---|---|---|---|---|---|---|---|
| CM-1 | MH-15A | 6 | BUTT WELD | 8 | 1" | MNPT | 170 | 90 | WATSON MCDANIEL | FA-22-BW-23-14-N-SS |
| CM-2 | MH-15B | 6 | BUTT WELD | 8 | 1" | MNPT | 170 | 90 | WATSON MCDANIEL | FA-22-BW-23-14-N-SS |
| CM-3 | MH-17C | 6 | BUTT WELD | 8 | 1" | MNPT | 170 | 90 | WATSON MCDANIEL | FA-22-BW-23-14-N-SS |

Revisions | Date

CONSULTANT

ARCHITECT/ENGINEER OF RECORD

2014-2024 10TH ANNIVERSARY
Above Group
ENGINEERING | DESIGN | CONSULTING
SDVOSB
www.abovegroupinc.com
COA/CA Lic. No. 31120
305 East Dr., Suite H,
Melbourne, Florida 32904
PH: 321.345.9026

STAMP

STATE OF MARYLAND
GEOFFREY S. CHENOWETH
No. 28825
REGISTERED
PROFESSIONAL ENGINEER

Office of Construction and Facilities Management

VA U.S. Department of Veterans Affairs

Drawing Title: MECHANICAL SCHEDULES

Phase: 100% CONSTRUCTION DOCUMENTS

Project Title: STEAM LINE REPLACEMENT

Project Number: 659-24-903

Building Number:

Approved:

Location: SALISBURY VAMC

Issue Date: 09/27/2024

Checked: GC

Drawn: DG

Drawing Number: M-801

Autodesk Docs://012/20/56 - Salisbury Steam Line Replacement/012/20/56 - VA Salisbury Stim Line Repl - R23_ME.rvt

9/27/2024 11:11:48 AM

VA FORM 08 - 6231