Cisco Collaboration Devices – Audio Integration

Setup guide

D15496.02 | © 2023 Cisco and/or its affiliates. All rights reserved.

Document version: 02
Date: 23rd January 2023

Revision history

Version	Date	Comment
D15496.01	October 2022	Audio I/O over USB. Initial version. Based on D15479.01, which covered analog audio I/O.
D15496.02	January 2023	Two-way audio support for all products. Requires software version RoomOS 11.0 or later.

Disclaimer

The material and information contained in this publication is for general information purposes only. Cisco provides this publication as is without warranty of any kind, either express or implied, including the implied warranties of merchantability or fitness for a particular purpose.

© 2023 Cisco Systems, Inc.

Contents

4 Introduction
6 Installation
8 Configuration
11 Loudspeaker options
12 Audio tests

D15496.02 | © 2023 Cisco and/or its affiliates. All rights reserved.

Introduction

As frequent users of video conferencing, we have experienced how important audio quality is to avoid meeting fatigue and miscommunication. For the most common use cases, Cisco has a variety of collaboration devices and accessories to ensure good audio quality.

Video collaboration devices are used in different rooms and spaces. Optimizing the audio experience is important to ensure a successful online meeting. Cisco has documented best practices on how to create effective video-enabled rooms, and we recommend you download the Best Practices guide from Project Workplace.

Traditionally, audio I/O has been over analog audio inputs and outputs, and based on best practices for professional installations. The Cisco collaboration devices support analogue connections using 3.5 mm mini-jack connectors or Euroblock balanced audio connectors. These connections have their benefits and can be used when required.

Recently, audio I/O over USB has become more important, and it is fully supported by Cisco collaboration devices running RoomOS 11 or later. A single USB connection simplifies the installation, maintains the same audio quality, and allows for mute synchronization between the external audio components and the Cisco device.

Cisco collaboration devices

All devices in the Board, Desk, and Room Series except Board support USB audio I/O. These collaboration devices are referred to as *Cisco devices* in the remainder of this paper. At the time of writing (January 2023), it's the devices listed in the following table.

Cisco devices with USB audio I/O support
Codec Pro based devices
Cisco Codec Pro / Room Kit Pro
Cisco Room 70 G2
Cisco Room 70 Panorama
Cisco Room Panorama
Codec Plus based devices
Cisco Codec Plus / Room Kit Plus
Cisco Room 55 Dual*
Cisco Room 70*
Other Room Series devices
Cisco Codec EQ / Room Kit EQ
Cisco Room Bar
Cisco Room Kit Mini
Cisco Room Kit
Cisco Room 55
Desk Series
Cisco Desk Pro
Cisco Desk
Cisco Desk Mini
Cisco Desk Hub
Board Series
Cisco Board Pro

RoomOS software support

For two-way USB audio support on all Cisco devices, the software version must be RoomOS 11 or later.

If your device is registered to an on-premises service such as Cisco UCM, check for the latest RoomOS software here (requires service contract); if the device is registered to the Webex cloud service, it is upgraded automatically from the cloud.

* You must add a USB hub if you want to connect external USB audio equipment to these devices. Their only USB-A port is used by the device itself.

 © 2023 Cisco and/or its affiliates. All rights reserved.

3rd party audio equipment

In order to solve specific challenges, you may want to integrate 3rd party audio components with a Cisco device. Cisco's goal is to make integration of partner components as simple as possible and to ensure a setup that delivers the best possible audio quality.

This paper describes how to set-up external audio processing solutions with Cisco devices using a USB-A connection. The paper is further accompanied by vendor specific setup guides.

The audio components and partner integrations must be compatible with the Cisco devices. Cisco has a certification program to verify compatibility and interoperability. Please see Webex Certified Partner Ecosystem for a list of currently certified vendors and components.

Further reading

For additional information please refer to the latest product documentation, FAQs, and user guides available on Cisco and partner websites.

- Cisco Project Workplace
- Maintain and Operate Guides for Room Series (applies also to Desk and Board Series)
- Device configurations for Board, Desk, and Room Series
- USB microphone support for Desk and Room Series
- Webex Certified Partner Ecosystem
- Collaboration devices - Sound Quality blog (https://blog.webex.com/collaboration-devices/sound-quality/)

D15496.02 | © 2023 Cisco and/or its affiliates. All rights reserved.

Installation

In many advanced room installations, you can connect an external audio system via USB. All Cisco devices has at least one USB-A connector, and the interface can pass on both audio and control signaling.

You can connect a USB microphone directly to the Cisco device, or you can connect several audio components via a more advanced external audio system.

Typically, the components of an external audio system are connected to an Ethernet switch, and the system's USB interface is part of a signal processing component (DSP) or Ethernet-to-USB adapter. Installation details depend on the components and devices used.

Mute button and LED synchronization

The microphones of the external audio system may have a built-in mute LED and a built-in mute button. The Cisco device supports USB HID (Human Interface Devices) control messages. If the external audio system also support HID, the mute buttons and mute LEDs on the external audio equipment and the Cisco device can be synchronized. All mute LEDs then shows the mute status of the overall system, and mute can be toggled on and off both by the microphones and the Cisco device.

Example 1:

A USB microphone connected directly to the Cisco device.

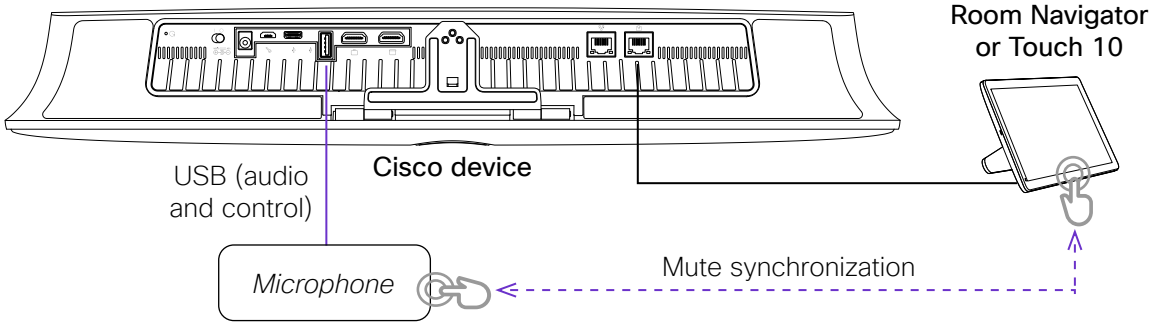

Example 2:

One or more USB microphones connected to the Cisco device via an external audio system.

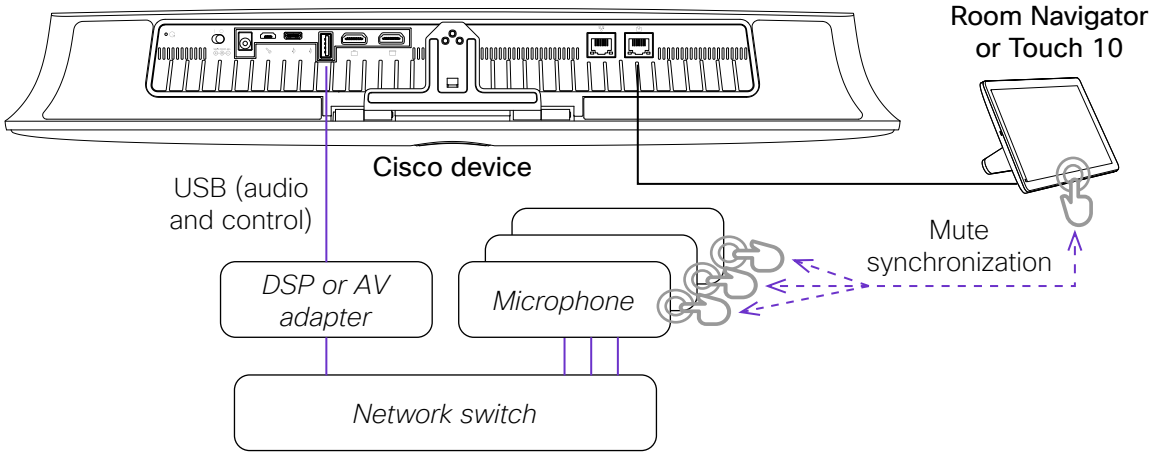

D15496.02 | © 2023 Cisco and/or its affiliates. All rights reserved.

Network security considerations

To strengthen the protection of media and other networking services, precautions must be taken to minimize security risks. Encrypted and authenticated media streams as well as control signaling are important to protect sensitive data.

We recommend precautions such as isolation of the networked audio components from the corporate network and enabling encryption and authentication.

Keep software and firmware of all devices up to date to benefit from functional and security related fixes and improvements.

D15496.02 | © 2023 Cisco and/or its affiliates. All rights reserved.

Configuration

Configuration of the vendor's audio components is outside the scope of this document. Please look for vendor specific integration guides in the Webex Certified Partner Ecosystem.

Audio signal processing

Audio signal processing, such as echo cancellation, noise reduction, microphone auto-mixing, and other time-variant processing, may be done either in the Cisco device or in the external audio system.

In many cases both alternatives give a working solution. Since the resulting audio quality is impacted by many factors, it may be valuable to set up and test both approaches to find the best solution in your environment.

We recommend that you, to the largest extent possible, do audio signal processing only in one place, that is, either in the external audio system or in the Cisco device. Turn it off the other place. Double processing may cause artifacts and quality reduction.

Note the following:

- Signal processing in the external audio system allows for more microphone channels than the Cisco device can handle itself, special signal routing, and integration of products that allow non-linear processing, beamforming, and auto-mixing.
- Signal processing in the Cisco device allows for stereo or directional audio, which require multiple AEC references to perform adequately. Many external audio systems only accept one AEC reference and hence can't perform spatial audio processing.

Other considerations

- For audio processing in the Cisco device, the external audio system should have a stable and linear frequency response. "Smart" signal processing, such as dynamic companding, may interfere with the performance of the Cisco device's echo canceller and degrade the audio quality.
- A USB interface may require higher power than offered on the Cisco device's USB-A port. In such cases, you must use an external power supply.
- Cisco recommends asynchronous USB audio.

  Cisco devices also support non-asynchronous USB audio. When using that you must switch off echo cancellation in the Cisco device, and leave it to be controlled by the external audio system. A diagnostics message, "USB microphone not supported. Asynchronous type is required", is issued if echo cancellation is not switched off.

Configuring the Cisco device

The next sections explain how to configure a Cisco device for audio over USB, for both signal processing alternatives:

- Echo cancellation in the external audio system
- Echo cancellation in the Cisco device

If you choose to do signal processing in the Cisco device remember to switch similar processing off in the external audio system. Refer to the vendor specific integration guides for information how to do that.

D15496.02 | © 2023 Cisco and/or its affiliates. All rights reserved.

Desk series, Board Pro, Room Bar, Room Kit Mini, Room Kit, and Room 55

Configuration	Echo cancellation in the external audio system	Echo cancellation in the Cisco device
Audio USB Mode	Microphone	Microphone
Audio Input USBMicrophone [n] EchoControl Mode	Off	On
Audio Input USBMicrophone [n] Level	0	adjustable (default: 5)
Audio Microphones AGC[1]	Off	On

[1] This configuration is available only on Codec EQ (without AVIntegrator option installed), Codec Plus, and Room Kit.

USB mode: Setting the *USB Mode* configuration to Microphone disables all microphones except external USB microphones. The audio output channel is not disabled, so the AEC reference signal is sent back to the microphone to allow for echo cancellation either in the Cisco device or in the external audio system.

Echo control mode, level, and AGC: Setting the *EchoControl Mode* to Off switches off the audio processing in the Cisco device, and a *Level* of 0 and *AGC* set to Off means that the Cisco device doesn't apply any gain. Hence audio processing and level adjustment is left to be controlled by the external audio system.

The default microphone *Level* is 5. When doing the audio processing in the Cisco device you may want to adjust it to suit the output level of your specific USB microphone or audio interface (steps of 1 dB).

Access Cisco device configurations

You have several options how to access device configurations. You can use Cisco UCM, Control Hub, the device web interface, the Audio Console, and API-commands. Choose your preferred way.

Device web interface:

- Sign into the web interface, click *Settings*, and open the *Configurations* tab to find all the device configurations.

API commands:

- Access the device API by SSH or other methods as described in the API Reference Guide.

Audio Console:

- Sign into the web interface and click *Audio Console* to open the application. The application is available only for Codec EQ (with AVIntegrator option installed) and Codec Pro based devices. It provides a graphical interface to customizable audio features.

Cisco UCM and Control Hub

- Read the Cisco UCM or Control Hub documentation to find the starting point on these portals. Once there, the path to a specific configuration is the same as for the other options.

D15496.02 | © 2023 Cisco and/or its affiliates. All rights reserved.

Codec EQ, Codec Plus, and Codec Pro based devices

Configuration	Echo cancellation in the external audio system	Echo cancellation in the Cisco device
Audio Input USBInterface [n] Mode	On	On
Audio Output USBInterface [n] Mode	On	On/Off
Audio Input USBInterface [n] EchoControl Mode	Off	On
Audio Input USBInterface [n] Level	0	adjustable (default: 5)
Audio Microphones AGC[1]	Off	On

[1] This configuration is available only on Codec EQ (without AVIntegrator option installed), Codec Plus, and Room Kit.

USB interface mode: The *Input USBInterface Mode* and *Output USBInterface Mode* must be On to allow audio input and audio output on the USB connector.

Echo control mode, level, and AGC: Setting the *EchoControl Mode* to Off switches off the audio processing in the Cisco device, and a *Level* of 0 and *AGC* set to Off means that the Cisco device doesn't apply any gain. Hence audio processing and level adjustment is left to be controlled by the external audio system.

The default microphone *Level* is 5. When doing the audio processing in the Cisco device you may want to adjust it to suit the output level of your specific USB microphone or audio interface (steps of 1 dB).

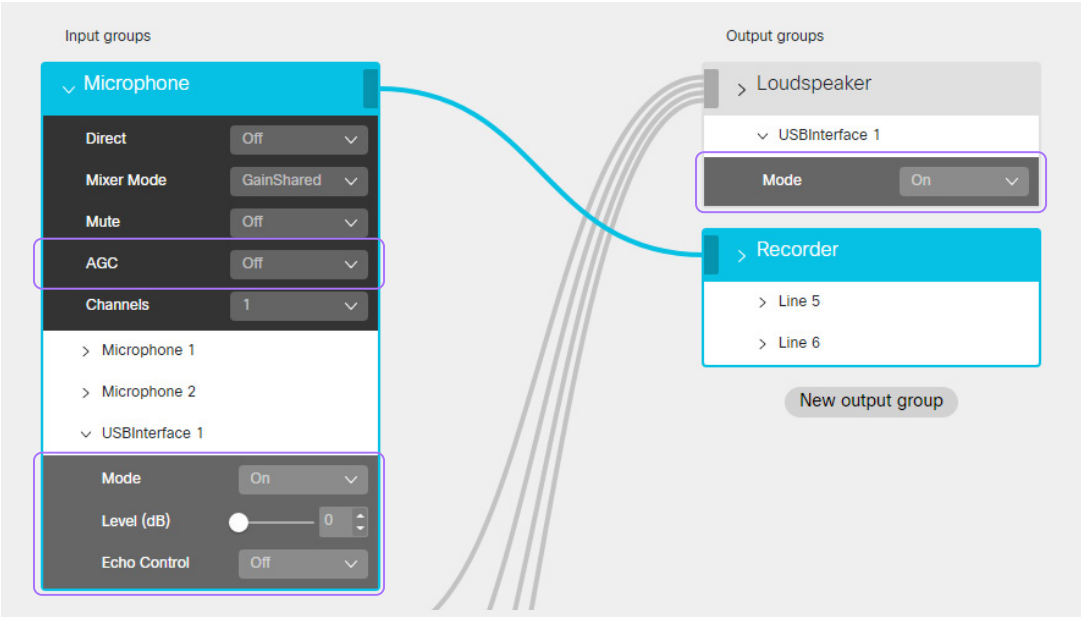

Example from Audio Console:
Echo cancellation turned off in the Cisco device to facilitate audio processing in the external audio system.

© 2023 Cisco and/or its affiliates. All rights reserved.

Loudspeaker options

When using an external audio system with the Cisco devices, you can use loudspeakers as part of the external audio system. If you do, you should not use the internal loudspeakers nor speakers connected to the analog output of the Cisco device to avoid delay artifacts.

If the external loudspeaker system does not support ultrasound (up to 22 kHz), you have on some devices the option to play ultrasound on the internal loudspeakers on the Cisco device.

Switching between loudspeaker modes on the Cisco devices is typically done via the Cisco device's local web interface under *Settings > Configurations > Audio*, or by accessing the command line API and performing steps using *xConfiguration Audio*. This requires an admin or integrator user role. For the Codec EQ and Codec Pro based products, settings can be changed with the Audio Console application.

Options for the *InternalSpeaker Mode* are: Off / On / UltrasoundOnly. If you have designed the system to use external loudspeakers only, we recommend selecting UltrasoundOnly. If you have chosen not to use external loudspeakers, then you should select the On setting for the *InternalSpeaker Mode*.

All Codec Plus based devices except Codec Plus itself, have the *UltrasoundOnly* option. The Codec EQ and Codec Pro doesn't have the *InternalSpeaker Mode* option.

D15496.02 | © 2023 Cisco and/or its affiliates. All rights reserved.

Audio tests

It is recommended to evaluate the quality of the overall system by performing tests. There is currently no simple automatic and/or objective test to determine the audio quality of the overall system.

Below are some suggestions for test call evaluation. We recommend making several calls, and wherever possible use multiple participants in the meeting room being tested and use multiple far end participants to gauge a range of responses.

Check the following (not exhaustive):

- Your microphone volume, tone, and speech quality are received fully and perceived by far end participants as satisfactory.
- Maximum loudspeaker volume in your meeting room is set to a reasonable level which cannot be exceeded by an in-room participant.
- Mute sync, LED, call status and their relevant feedback indicators work as described and without noticeable latency or lag between the touch controller (Touch 10 or Room Navigator) and external components.
- Audio does not pass when system is muted, and you cannot be heard by the far end in the mute state.
- Audio passes when system is not muted, and the far end hears you clearly in this state.
- The far end participant does not hear themselves back when talking. This proves AEC is working.
- Participants on both far end and in the meeting room are able to hear each other clearly if they momentarily talk over each other.
- System operates as normal following a power cycle of meeting room devices.
- System operates as normal following a power cycle of the network switch providing power to the external components.

There may be times during setup when it becomes clear the microphone gain or loudspeaker output levels must be adjusted. Use your best judgment and change settings in as few points in the signal chain as possible, as little as possible.

D15496.02 | © 2023 Cisco and/or its affiliates. All rights reserved.

January 2023

©2023 Cisco and/or its affiliates. All rights reserved. Cisco and the Cisco logo are trademarks or registered trademarks of Cisco and/or its affiliates in the U.S. and other countries. To view a list of Cisco trademarks, go to this URL: https://www.cisco.com/go/trademarks. Third-party trademarks mentioned are the property of their respective owners. The use of the word partner does not imply a partnership relationship between Cisco and any other company. (1110R)