Mechanical Compliance Certificate

Project Information

Energy Code: 2024 IECC
Project Title: Rehabilitate Kawuneeche Visitor Center
Location: Grand Lake, Colorado
Climate Zone: 7
Project Type: Alteration

Construction Site:
16018 US-34
Grand Lake , Colorado 80447

Owner/Agent:
National Park Service

Designer/Contractor:
360 Engineering, Inc.
Golden , Colorado 80403
303-940-2050

Mechanical Systems List

Quantity	Component	Description
HVAC Systems		
1	GF-1 (Single Zone):	Heating: 1 each - Central Furnace (GF-1), Gas, Capacity = 100 kBtu/h Proposed Efficiency = 96.00% Et, Required Efficiency: 80.00 % Et or 80% AFUE Fan System: GF-1 | NORTH OFFICES -- Compliance (Motor nameplate HP and fan efficiency method) : Passes Fans: FAN 1 Supply, Constant Volume, 2150 CFM, 1.0 motor nameplate hp, 1.00 fan energy index
1	GF-2 (Single Zone):	Heating: 1 each - Central Furnace (GF-2), Gas, Capacity = 120 kBtu/h Proposed Efficiency = 96.00% Et, Required Efficiency: 80.00 % Et or 80% AFUE Fan System: GF-2 | EXHIBIT NO. 1 -- Compliance (Motor nameplate HP and fan efficiency method) : Passes Fans: FAN 2 Supply, Constant Volume, 2250 CFM, 1.0 motor nameplate hp, 1.00 fan energy index
1	GF-3 (Single Zone):	Heating: 1 each - Central Furnace (GF-3), Gas, Capacity = 100 kBtu/h Proposed Efficiency = 96.00% Et, Required Efficiency: 80.00 % Et or 80% AFUE Fan System: GF-3 | SOUTH OFFICES & CORRIDOR -- Compliance (Motor nameplate HP and fan efficiency method) : Passes Fans: FAN 3 Supply, Constant Volume, 1800 CFM, 1.0 motor nameplate hp, 1.00 fan energy index
1	GF-4 (Single Zone):	Heating: 1 each - Central Furnace (GF-4), Gas, Capacity = 100 kBtu/h Proposed Efficiency = 96.00% Et, Required Efficiency: 80.00 % Et or 80% AFUE Fan System: GF-4 | AUDITORIUM -- Compliance (Motor nameplate HP and fan efficiency method) : Passes Fans: FAN 4 Supply, Constant Volume, 1700 CFM, 1.0 motor nameplate hp, 1.00 fan energy index
1	GF-5 (Single Zone):	Heating: 1 each - Central Furnace (GF-5), Gas, Capacity = 60 kBtu/h Proposed Efficiency = 96.00% Et, Required Efficiency: 80.00 % Et or 80% AFUE Fan System: GF-5 | EXHIBIT NO. 2 -- Compliance (Motor nameplate HP and fan efficiency method) : Passes Fans: FAN 5 Supply, Constant Volume, 100 CFM, 0.8 motor nameplate hp, 0.00 fan energy index , fan exception: Single fan < 1 HP or < 0.89 kW

Quantity	Component	Description
1	GF-6 (Single Zone):	Heating: 1 each - Central Furnace (GF-6), Gas, Capacity = 100 kBtu/h Proposed Efficiency = 96.00% Et, Required Efficiency: 80.00 % Et or 80% AFUE Fan System: GF-6 | COMFORT STATION -- Compliance (Motor nameplate HP and fan efficiency method) : Passes Fans: FAN 6 Supply, Constant Volume, 1200 CFM, 1.0 motor nameplate hp, 1.00 fan energy index
1	AC/CU-1 (Single Zone w/ PerimeterSystem):	Cooling: 1 each - Split System (AC/CU-1), Capacity = 30 kBtu/h, Air-Cooled Condenser, No Economizer, Economizer exception: None Proposed Efficiency = 19.00 SEER2, Required Efficiency = 13.40 SEER2 Proposed Part Load Efficiency = 0.00 , Required Part Load Efficiency = 0.00 Fan System: AC-1 | SERVER ROOM -- Compliance (Motor nameplate HP and fan efficiency method) : Passes Fans: FAN 7 Supply, Constant Volume, 750 CFM, 0.2 motor nameplate hp, 0.00 fan energy index , fan exception: Single fan < 1 HP or < 0.89 kW
1	EUH-1 (Single Zone w/ PerimeterSystem):	Heating: 1 each - Unit Heater (EUH-1), Electric, Capacity = 17 kBtu/h No minimum efficiency requirement applies Fan System: EUH-1 | MECH/ELEC -- Compliance (Motor nameplate HP and fan efficiency method) : Passes Fans: FAN 8 Supply, Constant Volume, 350 CFM, 0.2 motor nameplate hp, 0.00 fan energy index , fan exception: Single fan < 1 HP or < 0.89 kW
Water Heaters		
1	EWH-1:	Electric Storage Water Heater, Capacity: 20 gallons w/ Circulation Pump No minimum efficiency requirement applies
1	EWH-2:	Electric Storage Water Heater, Capacity: 10 gallons No minimum efficiency requirement applies
1	GWH-1:	Gas Storage Water Heater, Capacity: 50 gallons, Input Rating: 76 kBtu/h w/ Circulation Pump No minimum efficiency requirement applies

Mechanical Compliance Statement

Compliance Statement: The proposed mechanical design represented in this document is consistent with the building plans, specifications, and other calculations submitted with this permit application. The proposed mechanical systems have been designed to meet the 2024 IECC requirements in COMcheckWeb and to comply with any applicable mandatory requirements listed in the Inspection Checklist.

Name - Title	Signature	Date
Jonathan Garber - Project Manager	Jonathan Garber	08/21/25

Inspection Checklist

Energy Code: 2024 IECC

Requirements: 92% were addressed directly in the COM*check* software

Text in the "Comments/Assumptions" column is provided by the user in the COMcheck Requirements screen. For each requirement, the user certifies that a code requirement will be met and how that is documented, or that an exception is being claimed. Where compliance is itemized in a separate table, a reference to that table is provided.

Plan Review

Section # & Req.ID	Plan Review	Complies?	Comments/Assumptions
C105.2 [PR2]¹	Plans, specifications, and/or calculations provide all information with which compliance can be determined for the mechanical and service water heating systems and document where exceptions to the standard are claimed. Load calculations per acceptable engineering standards and handbooks. Hot water system sized per manufacturer's sizing guide.	☐ Complies ☐ Does Not Comply ☐ Not Observable ☐ Not Applicable	**Location on plans/spec:** Mechanical/Plumbing drawings

Additional Comments/Assumptions:

1	High Impact (Tier 1)	2	Medium Impact (Tier 2)	3	Low Impact (Tier 3)

Footing / Foundation Inspection

Section # & Req.ID	Footing / Foundation Inspection	Complies?	Comments/Assumptions
C403.14.2, C403.14.3 [FO7]¹	Snow/ice melting system and freeze protection systems have sensors and controls configured to limit service for pavement temperature above 50F and outdoor temperature above 40F.	☐ Complies ☐ Does Not Comply ☐ Not Observable ☐ Not Applicable	**Exception:** Requirement does not apply.

Additional Comments/Assumptions:

1	High Impact (Tier 1)	2	Medium Impact (Tier 2)	3	Low Impact (Tier 3)

Plumbing Rough-In Inspection

Section # & Req.ID	Plumbing Rough-In Inspection	Complies?	Comments/Assumptions
C404.5, C404.5.1, C404.5.2 [PL1]¹	Heated water supply piping conforms to pipe length and volume requirements. Refer to section details.	☐ Complies ☐ Does Not Comply ☐ Not Observable ☐ Not Applicable	**Exception:** Requirement does not apply.
C404.6.1, C404.6.1.1 [PL2]¹	Demand recirculation water systems have controls that start the pump upon receiving a signal from the action of a user of a fixture or appliance and limits the temperature of the water entering the cold-water piping to 104°F.	☐ Complies ☐ Does Not Comply ☐ Not Observable ☐ Not Applicable	**Location on plans/spec:** P600
C404.6.1, C404.6.2 [PL3]¹	Automatic time switches installed to automatically switch off the recirculating hot-water system or heat trace.	☐ Complies ☐ Does Not Comply ☐ Not Observable ☐ Not Applicable	**Location on plans/spec:** P600
C404.6.3 [PL4]¹	Pumps that circulate water between a heater and storage tank have controls that limit operation from startup to <= 5 minutes after end of heating cycle.	☐ Complies ☐ Does Not Comply ☐ Not Observable ☐ Not Applicable	**Exception:** Requirement does not apply.
C404.7 [PL5]¹	Drain water heat recovery (DWHR) units comply with CSA B55.2 with pressure loss < 10 pai at maximum flow. Group R occupancies have DWHR efficiencies in accordance with CSA B55.1.	☐ Complies ☐ Does Not Comply ☐ Not Observable ☐ Not Applicable	**Exception:** Requirement does not apply.

Additional Comments/Assumptions:

1	High Impact (Tier 1)	2	Medium Impact (Tier 2)	3	Low Impact (Tier 3)

Mechanical Rough-In Inspection

Section # & Req.ID	Mechanical Rough-In Inspection	Complies?	Comments/Assumptions
C403.3 [ME1]¹	HVAC equipment efficiency verified.	☐ Complies ☐ Does Not Comply ☐ Not Observable ☐ Not Applicable	*See the Mechanical Systems list for values*
C403.12.3, C403.12.3.1, C403.12.3.2 [ME13]¹	Refrigerated display cases, walk-in coolers or walk-in freezers served by remote compressors and remote condensers not located in a condensing unit, have fan-powered condensers that comply with Sections C403.12.3.1 and refrigeration compressor systems that comply with C403.12.3.2.	☐ Complies ☐ Does Not Comply ☐ Not Observable ☐ Not Applicable	**Exception:** Requirement does not apply.
C403.14.1 [ME14]¹	Systems that heat outside the building envelope are radiant heat systems controlled by an occupancy sensing device or timer switch.	☐ Complies ☐ Does Not Comply ☐ Not Observable ☐ Not Applicable	**Exception:** Requirement does not apply.
C403.13.1, C403.13.2 [ME15]¹	HVAC ducts and plenums insulated in accordance with C403.13.1 and constructed in accordance with C403.13.3, verification may need to occur during Foundation Inspection.	☐ Complies ☐ Does Not Comply ☐ Not Observable ☐ Not Applicable	**Location on plans/spec:** Spec section 230713
C403.13.3 [ME16]¹	HVAC piping insulation insulated in accordance with Table C403.13.3. Insulation exposed to weather is protected from damage and is provided with shielding from solar radiation.	☐ Complies ☐ Does Not Comply ☐ Not Observable ☐ Not Applicable	**Location on plans/spec:** Spec section 230716
C403.2.2 [ME18]¹	Natural or mechanical ventilation is provided in accordance with International Mechanical Code Chapter 4. Mechanical ventilation has capability to reduce outdoor air supply to minimum per IMC Chapter 4.	☐ Complies ☐ Does Not Comply ☐ Not Observable ☐ Not Applicable	**Location on plans/spec:** M600 and M800
C403.3.3 [ME20]¹	Hot gas bypass limited to: <=240 kBtu/h – 50% >240 kBtu/h – 25%	☐ Complies ☐ Does Not Comply ☐ Not Observable ☐ Not Applicable	**Location on plans/spec:** Requirement does not apply.
C403.4.1.3 [ME24]¹	Where thermostatic control setpoints are adjustable by occupants or HVAC operators, the adjustments are independent for heating and cooling setpoint.	☐ Complies ☐ Does Not Comply ☐ Not Observable ☐ Not Applicable	**Location on plans/spec:** M600
C403.4.1.5 [ME26]¹	Heating for vestibules and air curtains with integral heating include automatic controls that shut off the heating system when outdoor air temperatures > 45F. Vestibule heating and cooling systems controlled by a thermostat in the vestibule with heating setpoint <= 60F and cooling setpoint >= 90F.	☐ Complies ☐ Does Not Comply ☐ Not Observable ☐ Not Applicable	**Exception:** Requirement does not apply.
C403.9 [ME3]¹	Large diameter fans where installed shall be tested and labeled in accordance with AMCA 230 and meet efficacy requirements of Table C403.9.	☐ Complies ☐ Does Not Comply ☐ Not Observable ☐ Not Applicable	**Exception:** Requirement does not apply.
C403.4.7 [ME35]¹	Doors or operable openings from conditioned space to outdoors > 40 sq ft contain automatic controls interlocked with the heating and cooling system.	☐ Complies ☐ Does Not Comply ☐ Not Observable ☐ Not Applicable	**Exception:** Entrance doors as part of vestibule.

ASHRAE 62.1 - 2019: Outside Air Calculations Summary

System Name and Number	System Type	System Floor Area As (SQ. FT)	System Population Ps (People)	Average Air Distribution Effectiveness Ez	Outdoor Air Intake Flow (required by 62.1) Vot (CFM)	Outdoor Air Intake Flow Provided (measured or design) (CFM)	Outdoor air intake flow provided meets or exceeds Vot?	Notes
GF-1	Multi-Zone	643	9	1.0	111.4	115	YES	
GF-2	Multi-Zone	937	25	1.0	322.7	325	YES	
GF-3	Multi-Zone	1449	16	1.0	222.6	225	YES	
GF-4	Single Zone	1034	52	0.8	400.7	405	YES	
GF-5	Single Zone	495	15	0.8	176.3	180	YES	

GENERAL NOTES

A. THIS TABLE IS PROVIDED AS A CONDENSED SUMMARY OF THE CALCULATIONS FOR EACH SYSTEM. EACH SYSTEM'S OUTSIDE AIR QUANTITIES ARE CALCULATED USING THE VENTILATION RATE PROCEDURE OUTLINED IN SECTION 6.2 AND BASED ON THE SYSTEM TYPE CLASSIFIED USING SECTIONS 6.2.2, 6.2.3, AND 6.2.4.

SYSTEM NOTES

1 MULTI-ZONE SYSTEM OUTSIDE AIR QUANTITY WAS CALCULATED USING THE SIMPLIFIED METHOD IN SECTION 6.4.2.3

COLORADO LICENSED
JENNIFER JAMES RIDDLE
55863
01/16/26
PROFESSIONAL ENGINEER

AE FIRM	DESIGNED:	SUB SHEET NO.	TITLE OF SHEET	DRAWING NO.
PRIME: OTAK, INC. REDMOND, WA SUBCONTRACTOR: 360 ENGINEERING, INC. GOLDEN, CO	JEG/MM DRAWN: JEG/MM TECH REVIEW: SJR/DMD DATE: 01/16/2026	M800	MECHANICAL CALCS AND COMCHECK REHABILITATE KAWUNEECHE VISITOR CENTER ROCKY MOUNTAIN NATIONAL PARK	121 / 165639 PMIS/PKG NO. 326235 SHEET 104 OF 177

1/7/2026 8:37:07 PM Autodesk Docs://2024-260 NPS ROMO Kawuneeche VC DD-CA wOtak/ROMO KVC Mech-Plumb.rvt

Section # & Req.ID	Mechanical Rough-In Inspection	Complies?	Comments/Assumptions
C403.4.8.1 [ME36]^{1}	Dehumidification controls do not use mechanical cooling to reduce humidity < 60% or a dew point < 55F	☐ Complies ☐ Does Not Comply ☐ Not Observable ☐ Not Applicable	**Exception:** Requirement does not apply.
C403.4.8.2 [ME37]^{1}	Humidity controls do not use fossil fuel or electricity for a humidity > 30% in warmest zone.	☐ Complies ☐ Does Not Comply ☐ Not Observable ☐ Not Applicable	**Exception:** Requirement does not apply.
C403.4.8.3 [ME38]^{1}	Zones served by systems with both humidification and dehumification prevent simultaneous operation.	☐ Complies ☐ Does Not Comply ☐ Not Observable ☐ Not Applicable	**Exception:** Requirement does not apply.
C404.2 [ME4]^{1}	Service water heating equipment meets efficiency requirements.	☐ Complies ☐ Does Not Comply ☐ Not Observable ☐ Not Applicable	
C403.5.5 [ME45]^{1}	Fault detection and diagnostics installed with air-cooled unitary DX units or VRF units having economizers.	☐ Complies ☐ Does Not Comply ☐ Not Observable ☐ Not Applicable	**Exception:** Requirement does not apply.
C403.7.1 [ME56]^{1}	Demand control ventilation provided for spaces >250 ft2 and >15 people/1000 ft2 occupant density and served by systems with air side economizer, auto modulating outside air damper control, or design airflow >3,000 cfm.	☐ Complies ☐ Does Not Comply ☐ Not Observable ☐ Not Applicable	**Location on plans/spec:** M111 and M600
C403.7.2 [ME57]^{1}	Enclosed parking garage ventilation has separate ventilation systems for each section, can reduce airflow < 0.05 cfm/sq ft of floor area and >20% of design capacity.	☐ Complies ☐ Does Not Comply ☐ Not Observable ☐ Not Applicable	**Exception:** Requirement does not apply.
C403.7.4 [ME59]^{1}	Exhaust air energy recovery on systems meeting Table C403.7.4(1) and C403.7.4(2).	☐ Complies ☐ Does Not Comply ☐ Not Observable ☐ Not Applicable	**Exception:** Requirement does not apply.
C403.7.5 [ME60]^{1}	Kitchen exhaust systems comply with replacement air and conditioned supply air limitations, and satisfy hood rating requirements and maximum exhaust rate criteria. Type I exhaust hoods contain demand control kitchen ventilation with > 50% reduction in exhaust.	☐ Complies ☐ Does Not Comply ☐ Not Observable ☐ Not Applicable	**Exception:** Requirement does not apply.
C403.7.6 [ME61]^{1}	HVAC systems serving guestrooms in Group R-1 buildings with > 50 guestrooms: Each guestroom is provided with controls that automatically manage temperature setpoint and ventilation (see sections C403.7.6.1 and C403.7.6.2).	☐ Complies ☐ Does Not Comply ☐ Not Observable ☐ Not Applicable	**Exception:** Requirement does not apply.
C403.7.8, C403.7.8.1 [ME63]^{1}	Classrooms, training rooms, conference and multipurpose rooms, lounges, enclosed offices, open office areas and corridors contain occupied standby ventilation controls.	☐ Complies ☐ Does Not Comply ☐ Not Observable ☐ Not Applicable	**Location on plans/spec:** M600

Section # & Req.ID	Mechanical Rough-In Inspection	Complies?	Comments/Assumptions
C403.8.4 [ME67]^{1}	Motors for fans that are not less than 1/12 hp and less than 1 hp are electronically commutated motors or have a minimum motor efficiency of 70 percent. These motors have the means to adjust motor speed.	☐ Complies ☐ Does Not Comply ☐ Not Observable ☐ Not Applicable	**Location on plans/spec:** M600
C403.8.6 [ME68]^{1}	Each DX cooling system > 65 kBtu and chiller water/evaporative cooling system with fans > 1/4 hp are designed to vary the indoor fan airflow as a function of load and comply with detailed requirements of this section.	☐ Complies ☐ Does Not Comply ☐ Not Observable ☐ Not Applicable	**Exception:** Requirement does not apply.
C403.15 [ME69]^{1}	Dehumidification systems for plant growth and maintenance are tested in accordance with DOE 10 CFR 430, has on-site heat recovery > 75% of dehumidification energy or ha a solid or liquid desiccant.	☐ Complies ☐ Does Not Comply ☐ Not Observable ☐ Not Applicable	**Exception:** Requirement does not apply.
C403.16 [ME70]^{1}	Service water pressure boost systems contain pressure sensors for pump control, no devices used to reduce pressure and booster pumps do not operate when there is no service water flow.	☐ Complies ☐ Does Not Comply ☐ Not Observable ☐ Not Applicable	**Exception:** Requirement does not apply.
C403.17 [ME71]^{1}	Clean water pumps achieve a pump energy index (PEI) <= 1.0.	☐ Complies ☐ Does Not Comply ☐ Not Observable ☐ Not Applicable	**Exception:** Requirement does not apply.
C404.2.1 [ME72]^{1}	Gas-fired water-heating equipment installed in new buildings: where a singular piece of water-heating equipment >= 1,000 kBtu/h serves the entire building, thermal efficiency >= 92 Et. Where multiple pieces of water-heating equipment serve the building with combined rating >= 1,000 kBtu/h, the combined input-capacity-weighted-average thermal efficiency >= 90 Et. Exclude input rating of equipment in individual dwelling units and equipment <= 100 kBtu/h.	☐ Complies ☐ Does Not Comply ☐ Not Observable ☐ Not Applicable	
C408.2.2.1 [ME73]^{1}	Air outlets and zone terminal devices have means for air balancing.	☐ Complies ☐ Does Not Comply. ☐ Not Observable ☐ Not Applicable	**Location on plans/spec:** M111 and M600

Additional Comments/Assumptions:

1	High Impact (Tier 1)	2	Medium Impact (Tier 2)	3	Low Impact (Tier 3)

Final Inspection

Section # & Req.ID	Final Inspection	Complies?	Comments/Assumptions
C403.1.1 [FI112]^{1}	HVAC systems and equipment design loads calculated in accordance with ANSI/ASHRAE/ACCA Standard 183 or by an approved equivalent computational procedure	☐ Complies ☐ Does Not Comply ☐ Not Observable ☐ Not Applicable	**Location on plans/spec:** M000
C403.3.1 [FI113]^{1}	HVAC systems and equipment capacity does not exceed calculated loads.	☐ Complies ☐ Does Not Comply ☐ Not Observable ☐ Not Applicable	**Location on plans/spec:** M000
C403.4.1 [FI114]^{1}	Heating and cooling to each zone is controlled by a thermostat co/trol. Minimum one humidity control device per installed humidification/dehumidification system.	☐ Complies ☐ Does Not Comply ☐ Not Observable ☐ Not Applicable	**Location on plans/spec:** M111
C403.4.1.2 [FI116]^{1}	Thermostatic controls have a 5 °F deadband.	☐ Complies ☐ Does Not Comply ☐ Not Observable ☐ Not Applicable	**Exception:** Manual changeover thermostats.
C403.4.1.4 [FI117]^{1}	Temperature controls have setpoint overlap restrictions.	☐ Complies ☐ Does Not Comply ☐ Not Observable ☐ Not Applicable	**Exception:** Requirement does not apply.
C403.4.2 [FI118]^{1}	Each zone equipped with setback controls using automatic time clock or programmable control system.	☐ Complies ☐ Does Not Comply ☐ Not Observable ☐ Not Applicable	**Location on plans/spec:** M600
C403.4.2.1, C403.4.2.2 [FI119]^{1}	Automatic Controls: Setback to 55° F (heat) and 85° F (cool); 7-day clock, 2-hour occupant override, 10-hour backup	☐ Complies ☐ Does Not Comply ☐ Not Observable ☐ Not Applicable	**Exception:** Requirement does not apply.
C403.4.2.3 [FI120]^{1}	Systems include optimum start controls.	☐ Complies ☐ Does Not Comply ☐ Not Observable ☐ Not Applicable	**Exception:** Requirement does not apply.
C404.3 [FI2]^{1}	Heat traps installed on supply and discharge piping of non-circulating systems.	☐ Complies ☐ Does Not Comply ☐ Not Observable ☐ Not Applicable	**Exception:** Requirement does not apply.
C404.4 [FI3]^{1}	All service water heating piping meets the thickness requirements of Table C404.4.1.	☐ Complies ☐ Does Not Comply ☐ Not Observable ☐ Not Applicable	**Location on plans/spec:** Spec section 221116
C404.6.1 [FI21]^{1}	Controls are installed that limit the operation of a recirculation pump installed to maintain temperature of a storage tank. System return pipe is a dedicated return pipe or a cold water supply pipe.	☐ Complies ☐ Does Not Comply ☐ Not Observable ☐ Not Applicable	**Exception:** Requirement does not apply.

Section # & Req.ID	Final Inspection	Complies?	Comments/Assumptions
C405.15.1, C405.15.2 [FI25]^{1}	Buildings in climate zones 0 - 7 comply with the on-site and/or off -site renewable energy requirements of Section C405.15.	☐ Complies ☐ Does Not Comply ☐ Not Observable ☐ Not Applicable	**Exception:** Requirement does not apply.
C406.2.3.3 [FI36]^{1}	Service water heating energy credit measure W06 has been selected for energy credit - thermostatic balancing valves installed in hot water recirculation systems.	☐ Complies ☑ Does Not Comply ☐ Not Observable ☐ Not Applicable	
C408.1.1 [FI58]^{1}	Building operations and maintenance documents will be provided to the owner. Documents will cover manufacturers' information, specifications, programming procedures and means of illustrating to owner how building, equipment and systems are intended to be installed, maintained, and operated.	☐ Complies ☑ Does Not Comply ☐ Not Observable ☐ Not Applicable	
C408.2.1 [FI59]^{1}	Commissioning plan developed by registered design professional or approved agency.	☐ Complies ☐ Does Not Comply ☐ Not Observable ☐ Not Applicable	**Location on plans/spec:** M000
C408.2.3.1 [FI60]^{1}	HVAC equipment, systems and system-to-system relationships have been tested to ensure proper operation.	☐ Complies ☐ Does Not Comply ☐ Not Observable ☐ Not Applicable	**Location on plans/spec:** M000
C408.2.3.2 [FI74]^{1}	HVAC and service water heating control systems have been tested to ensure proper operation, calibration and adjustment of controls.	☐ Complies ☐ Does Not Comply ☐ Not Observable ☐ Not Applicable	**Location on plans/spec:** M000
C408.2.4 [FI61]^{1}	Preliminary commissioning report completed and certified by registered design professional or approved agency.	☐ Complies ☐ Does Not Comply ☐ Not Observable ☐ Not Applicable	**Location on plans/spec:** M000
C408.2.5 [FI75]^{1}	Furnished HVAC as-built drawings submitted within 90 days of system acceptance.	☐ Complies ☐ Does Not Comply ☐ Not Observable ☐ Not Applicable	
C408.2.5.1 [FI62]^{1}	An air and/or hydronic system balancing report is provided for HVAC systems.	☐ Complies ☐ Does Not Comply ☐ Not Observable ☐ Not Applicable	**Location on plans/spec:** Spec section 250593
C408.2.5.2 [FI76]^{1}	Final commissioning report due to building owner within 90 days of receipt of certificate of occupancy.	☐ Complies ☐ Does Not Comply ☐ Not Observable ☐ Not Applicable	**Location on plans/spec:** M000
C408.3.2.2 [FI77]^{1}	Furnished O&M instructions for systems and equipment to the building owner or designated representative.	☐ Complies ☐ Does Not Comply ☐ Not Observable ☐ Not Applicable	

Section # & Req.ID	Final Inspection	Complies?	Comments/Assumptions
C408.3.2.2 [FI63]^{1}	Furnished O&M manuals for HVAC systems within 90 days of system acceptance.	☐ Complies ☐ Does Not Comply ☐ Not Observable ☐ Not Applicable	

Additional Comments/Assumptions:

1	High Impact (Tier 1)	2	Medium Impact (Tier 2)	3	Low Impact (Tier 3)

ASHRAE 15 REFRIGERANT CALCULATIONS

System Information					Space Information (See space volume table)		Effective Dispersal Volume Charge (Maximum allowable refrigerant charge)					NOTES
System Name	System Type	Refrigerant	Refrigerant Type	Refrigerant Charge (lbs)	Space Tag(s)	Total Volume (ft3)	EDVC - RCL (lbs)	EDVC - RCL ADJ. FOR ALTITUDE (lbs)	RCL COMPLIANT?	EDVC - LFL (lbs)	LFL COMPLIANT?	
AC/CU-1	Split	R-454B	A2L	7.6875	A, B, C, D	6776	21.0	16.6	YES	149.1	YES	1,2,3

NOTES:

1. SPACE VOLUME INCLUDES SPACES ADJACENT TO ROOM, CONNECTED BY TRANSFER GRILLES AS SHOWN ON PLAN.
2. CALCULATIONS ARE BASED ON ASHRAE 15-2022 AND COMPLY WITH THE 2024 INTERNATIONAL MECHANICAL CODE, SECTION 1101.1.1.
3. CALCULATIONS ARE ADJUSTED FOR ALTITUDE EQUAL TO 8726 FEET ABOVE SEA LEVEL.

SPACE VOLUME TABLE

Space Tag	Space Description	Area (SQ FT)	Height (FT)	Total Volume (CU FT)
A	116 Server Room	100	8	800
B	117 Mail	38	8	304
C	118 Break	215	8	1,720
D	108 Hall	494	8	3,952

COLORADO LICENSED
SPENCER JAMES RIOUX
55863
01/16/26
PROFESSIONAL ENGINEER

AE FIRM
PRIME:
OTAK, INC.
REDMOND, WA

SUBCONTRACTOR:
360 ENGINEERING, INC.
GOLDEN, CO

DESIGNED: JEG/MM
DRAFTED: JEG/MM
TECH REVIEW: SJR/DMD
DATE: 01/16/2026

SUB SHEET NO. M801

TITLE OF SHEET
MECHANICAL CALCS AND COMCHECK

REHABILITATE KAWUNEECHE VISITOR CENTER
ROCKY MOUNTAIN NATIONAL PARK

DRAWING NO. 121
165639
PMIS/PKG NO. 326235
SHEET 105 OF 177

1/7/2026 8:37:09 PM Autodesk Docs://2024-260 NPS ROMO Kawuneeche VC DD-CA wOtak/ROMO KVC Mech-Plumb.rvt

PLUMBING NOTES

1. GENERAL
    1. THESE DRAWINGS ARE DIAGRAMMATIC IN NATURE AND NOT INTENDED TO SHOW ALL TRANSITIONS, OFFSETS, ETC. CONTRACTOR SHALL FIELD VERIFY EXISTING CONDITIONS AND PROVIDE ALL NECESSARY FITTINGS TO COMPLETE THE INTENT OF THE DRAWINGS. ANY DISCREPANCIES BETWEEN DRAWINGS AND FIELD CONDITIONS SHALL BE REPORTED TO THE CONTRACTING OFFICER FOR RESOLUTION.
    2. CONTRACTOR SHALL COORDINATE WORK WITH OTHER TRADES AND NOTIFY THE CONTRACTING OFFICER IF ANY CONFLICTS OCCUR.
    3. CONTRACTOR SHALL REVIEW THESE DOCUMENTS CAREFULLY. CONTRACTOR SHALL CONTACT THE CONTRACTING OFFICER FOR RESOLUTION OF ANY DISCREPANCIES, OMISSIONS, OR CLARIFICATIONS, BEFORE SOLICITATION DATE. IN THE EVENT THAT AN INTERPRETATION OF SOLICITATION DOCUMENTS IS NECESSARY AFTER THE SOLICITATION DATE, THE DECISION OF THE CONTRACTING OFFICER SHALL BE FINAL AND BINDING.
    4. THE CONTRACTOR SHALL BE RESPONSIBLE FOR THE COSTS OF ALL CHANGE ORDERS, WHICH THE CONTRACTING OFFICER HAS NOT APPROVED IN WRITING PRIOR TO THE EXECUTION OF THE ASSOCIATED WORK.
    5. IN THE CASE OF A CONFLICT, UNLESS OTHERWISE NOTED, KEYNOTES ON PLUMBING PLANS SHALL SUPERCEDE ANY GENERAL NOTES ON THE PLANS.
    6. ALL REMOVED EQUIPMENT SHALL REMAIN THE PROPERTY OF THE FEDERAL GOVERNMENT AND SHALL BE STORED OR DISPOSED OF PER THE DIRECTION OF THE CONTRACTING OFFICER.
2. EXECUTION
    1. ALL PLUMBING WORK SHALL COMPLY WITH LOCAL CODES AND ORDINANCES.
    2. PITCH WASTE LINES NOT LESS THAN 1/4" PER FOOT. (UNLESS NOTED OTHERWISE).
    3. RUN ALL PIPING ON WARM SIDE OF BUILDING INSULATION. PIPE INSULATION IS NOT CONSIDERED FREEZE PROTECTION.
    4. PROVIDE DIELECTRIC UNIONS AT CONNECTIONS BETWEEN DISSIMILAR METALS, I.E., IRON VALVES AND COPPER TUBING.
    5. PROVIDE PIPE HANGERS OF THE SAME MATERIAL AS THE PIPING SYSTEM OR USE COATED HANGERS.
    6. SET FLOOR DRAINS SO THAT TOP WILL BE SLIGHTLY LOWER THAN SURROUNDING FLOOR.
    7. PROVIDE BALL VALVES AND UNIONS ON ALL LINES TO EQUIPMENT FOR ISOLATION AND REMOVAL.
    8. PLUMBING CONTRACTOR SHALL CHECK OPERATION AND CONDITION OF ALL EXISTING PLUMBING EQUIPMENT WITHIN THE CONFINES OF THIS SPACE, AND PREPARE A WRITTEN LIST OF DEFICIENCIES IN EQUIPMENT OPERATION OR CONDITION. LIST SHALL BE SUBMITTED TO THE CONTRACTING OFFICER WITHIN 2 WEEKS OF CONTRACT AWARD DATE.
    9. THE CONTRACTOR SHALL X-RAY THE FLOOR AND OBTAIN CONTRACTING OFFICER APPROVAL BEFORE CUTTING ANY FLOOR PENETRATIONS.
    10. WHERE REMOVAL OR RELOCATION OF EXISTING FIXTURES OCCURS, CONTRACTOR SHALL REMOVE ALL WASTE AND VENT BRANCH LINES NOT REQUIRED FOR NEW, OR REMAINING FIXTURE LOCATIONS.
    11. PROVIDE ADHESIVE, MULTICOLOR PIPE LABELS FOR ALL SYSTEMS. PROVIDE EVERY 50 FEET, AND EVERY 25 FEET IN CONGESTED AREAS.
    12. CONTRACTOR SHALL FLUSH ALL FLOOR DRAINS PRIOR TO TURNING OVER BUILDING OCCUPANCY TO THE PARK.

PLUMBING LEGEND

PIPING SERVICES

- G — NATURAL GAS
- COLD WATER (CW)
- HOT WATER (HW)
- HOT WATER RECIRCULATION (HWC)
- VENT (V)
- WASTE ABOVE (W)
- WASTE BELOW (W)
- CONDENSATE ABOVE (CD)
- GAS (G)

DRAWING NOTATION

- NEW TO EXISTING
- NEW WORK
- EXISTING ITEMS
- EXISTING ITEMS TO BE DEMOLISHED

VALVES

- GATE VALVE
- BALL VALVE
- PLUG VALVE
- CHECK VALVE
- 2WAY ATC VALVE
- 3WAY ATC VALVE
- PRESSURE REDUCING VALVE
- SAFETY RELIEF VALVE
- BACK FLOW PREVENTER
- BALANCING VALVE
- BUTTERFLY VALVE
- THREE WAY CONTROL VALVE

PIPING SYSTEM COMPONENTS

- ELBOW DOWN
- ELBOW UP
- TEE DOWN
- TEE UP
- CAP
- UNION
- FLEXIBLE CONNECTION
- FLOOR DRAIN
- FLOOR SINK
- DRAIN VALVE
- VENTURI TYPE BALANCING VALVE
- STRAINER
- FS — FLOW SENSOR
- S — TEMPERATURE SENSOR
- GRADE CLEAN OUT
- FLOOR CLEAN OUT
- WALL CLEAN OUT
- AUTOMATIC AIR CENT
- GAUGE
- THERMOMETER
- MANUAL AIR VENT
- P&T TAP
- IN LINE PUMP
- M — METER
- T — THERMOSTAT
- P — PRESSURE SENSOR

PLUMBING ABBREVIATIONS

ADJ	ADJUSTABLE
AFF	ABOVE FINISHED FLOOR
AHJ	AUTHORITY HAVING JURISDICTION
BLDG	BUILDING
CA	COMPRESSED AIR
CD	CONDENSATE DRAIN
CFH	CUBIC FEET PER HOUR
CFM	CUBIC FEET PER MINUTE
CI	CAST IRON
CW	COLD WATER
CWV	COMBINATION WASTE AND VENT
Cx	COMMISSIONING
(D)	DEMOLISH
DIA	DIAMETER
DFU	DRAINAGE FIXTURE UNIT
(E)	EXISTING
FD	FLOOR DRAIN
FFA	FROM FLOOR ABOVE
FFB	FROM FLOOR BELOW
FPM	FEET PER MINUTE
GPM	GALLONS PER MINUTE
GW	GREASE WASTE
GPM	GALLON PER MINUTE
HW	HOT WATER
HWC	HOT WATER CIRCULATION
HT	HEAT TRACE
ID	INDIRECT DRAIN
I.D.	INSIDE DIAMETER
LPG	LIQUEFIED PETROLEUM GAS (PROPANE)
MAX	MAXIMUM
MIN	MINIMUM
(N)	NEW
NG	NATURAL GAS
NIC	NOT IN CONTRACT
O.C.	ON CENTER
O.D.	OUTSIDE DIAMETER
PSIA	POUNDS PER SQUARE INCH (ABSOLUTE)
PSIG	POUNDS PER SQUARE INCH (GAUGE)
(R)	RELOCATED
RE:__	REFERENCE ____
REQ	REQUIRED/REQUIREMENT
SF	SQUARE FEET
STD	STANDARD
TFA	TO FLOOR ABOVE
TFB	TO FLOOR BELOW
TYP	TYPICAL
UNO	UNLESS NOTED OTHERWISE
V	VENT
VTR	VENT THRU ROOF
W	WASTE
W.C.	WATER COLUMN
WSFU	WATER SUPPLY FIXTURE UNIT

PLUMBING SHEET LIST

NUMBER	SHEET NAME
P000	PLUMBING LEGENDS AND NOTES
P101	OVERALL DEMO PLUMBING FLOOR PLAN
P111	OVERALL PLUMBING FLOOR PLAN - DOMESTIC & GAS
P121	OVERALL PLUMBING FLOOR PLAN - WASTE & VENT
P300	PLUMBING SECTIONS
P400	PLUMBING DEMO ENLARGED PLANS
P401	PLUMBING ENLARGED PLANS
P500	PLUMBING DETAILS
P600	PLUMBING SCHEDULES
P800	PLUMBING CALCS AND COMCHECK
P900	PLUMBING WASTE AND VENT ISOMETRICS

APPLICABLE CODES:

2024 INTERNATIONAL MECHANICAL CODE (IMC)
2024 INTERNATIONAL BUILDING CODE (IBC)
2024 INTERNATIONAL PLUMBING CODE (IPC)
2024 INTERNATIONAL FUEL GAS CODE (IFGC)
2024 INTERNATIONAL EXISTING BUILDING CODE (IEBC)
2024 INTERNATIONAL ENERGY CONSERVATION CODE (IECC)
ASHRAE 90.1-2022
ASHRAE 90.1-2022
NPS SUSTAINABILITY GUIDELINES

COLORADO LICENSED PROFESSIONAL ENGINEER JAMES ROBERT SEWKER 55863 01/16/26

AE FIRM	DESIGNED:	SUB SHEET NO.	TITLE OF SHEET	DRAWING NO.
PRIME: OTAK, INC. REDMOND, WA	JEG/MM	P000	PLUMBING LEGENDS AND NOTES	121 / 165639
SUBCONTRACTOR: 360 ENGINEERING, INC. GOLDEN, CO	CADD: JEG/MM			PMIS/PKG NO. 326235
	TECH REVIEW: SJR/DMD		REHABILITATE KAWUNEECHE VISITOR CENTER ROCKY MOUNTAIN NATIONAL PARK	SHEET 106 OF 177
	DATE: 01/16/2026			

1/7/2026 8:37:10 PM Autodesk Docs://2024-260 NPS ROMO Kawuneeche VC DD-CA wOtak/ROMO KVC Mech-Plumb.rvt

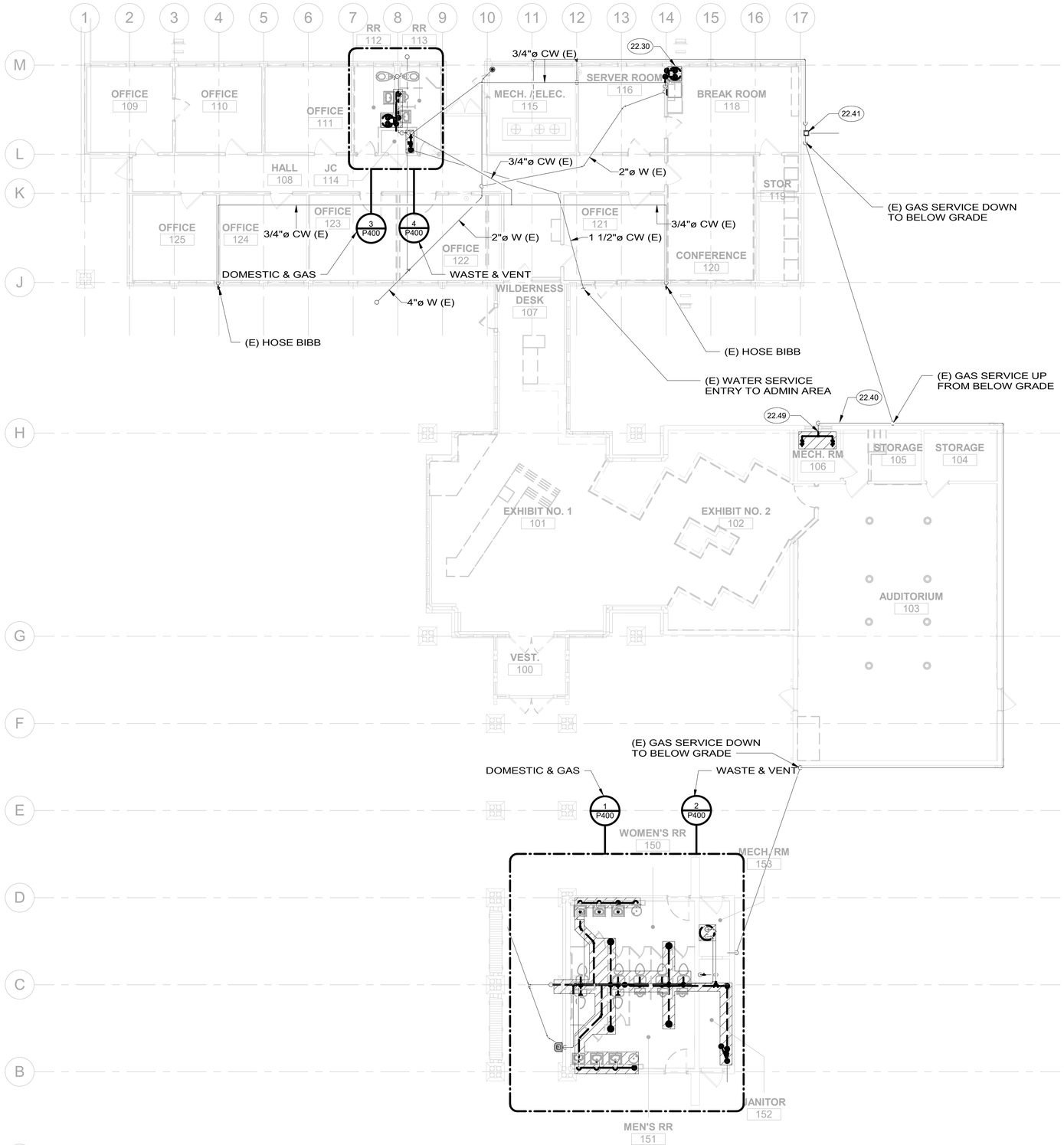

1 P101 OVERALL DEMO PLUMBING FLOOR PLAN
SCALE A

GENERAL NOTES:

1. SEE REFERENCED ENLARGED PLANS FOR ADDITIONAL NOTES AND DETAILS IN VARIOUS AREAS AS INDICATED.

KEYNOTES:

22.30 EXISTING WATER HEATER TO BE REMOVED. DISCONNECT ELECTRICAL CONNECTIONS PRIOR TO REMOVAL. DISCONNECT EXISTING HW AND CW CONNECTIONS AND MAKE READY FOR CONNECTION TO NEW WATER HEATER. SEE NEW WORK PLANS.

22.40 EXISTING GAS PIPING SHALL REMAIN. EXTEND EXISTING GAS BRANCH PIPING AS NECESSARY TO CONNECT TO NEW FURNACES.

22.41 EXISTING GAS METER SHALL REMAIN.

22.49 EXISTING GAS PIPING TO BE REMOVED IN MECHANICAL ROOM. EXISTING BRANCH SHALL BE MADE READY FOR RECONNECTION TO NEW PIPING.

SCALE: A 8 0 8 16 SCALE OF FEET

TRUE PLAN

COLORADO LICENSED PROFESSIONAL ENGINEER JEFFREY JAMES RUDY 55863 01/16/26

AE FIRM	DESIGNED:	SUB SHEET NO.	TITLE OF SHEET	DRAWING NO.
PRIME: OTAK, INC. REDMOND, WA	JEG/MM	P101	OVERALL DEMO PLUMBING FLOOR PLAN	121 165639
	CADD JEG/MM		REHABILITATE KAWUNEECHE VISITOR CENTER ROCKY MOUNTAIN NATIONAL PARK	PMIS/PKG NO. 326235
SUBCONTRACTOR: 360 ENGINEERING, INC. GOLDEN, CO	TECH REVIEW: SJR/DMD			SHEET 107 OF 177
	DATE: 01/16/2026			

1/7/2026 8:37:18 PM Autodesk Docs://2024-260 NPS ROMO Kawuneeche VC DD-CA wOtak/ROMO KVC Mech-Plumb.rvt

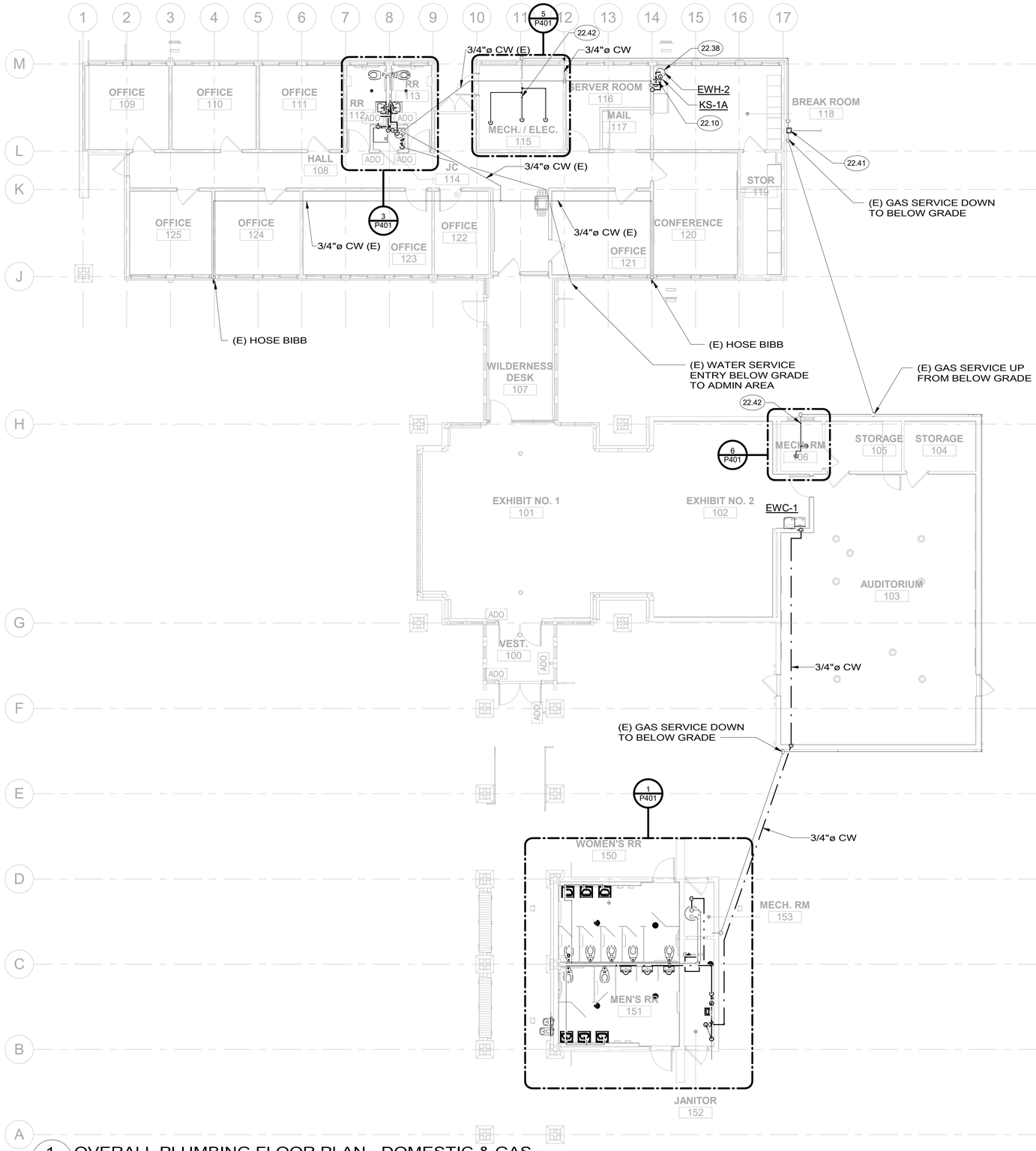

1 P111 OVERALL PLUMBING FLOOR PLAN - DOMESTIC & GAS
SCALE A

(#) KEYNOTES:

22.10 ROUTE CW AND HW, AND EXTEND TO SERVE FIXTURES SHOWN.

22.38 INSTALL PLUMBING EXPANSION TANK (PET-1) AS SHOWN IN DETAIL 1/P500.

22.41 EXISTING GAS METER SHALL REMAIN.

22.42 EXTEND 3/4"G TO EACH FURNACE.

SCALE: A 8 0 8 16 SCALE OF FEET

TRUE PLAN

COLORADO LICENSED PROFESSIONAL ENGINEER JAMES ROTH 55863 01/16/26

AE FIRM	DESIGNED:	SUB SHEET NO.	TITLE OF SHEET	DRAWING NO.
PRIME: OTAK, INC. REDMOND, WA	JEG/MM	P111	OVERALL PLUMBING FLOOR PLAN - DOMESTIC & GAS	121 165639
SUBCONTRACTOR: 360 ENGINEERING, INC. GOLDEN, CO	CADD JEG/MM		REHABILITATE KAWUNEECHE VISITOR CENTER ROCKY MOUNTAIN NATIONAL PARK	PMIS/PKG NO. 326235
	TECH REVIEW: SJR/DMD			SHEET 108 OF 177
	DATE: 01/16/2026			

1/7/2026 8:37:26 PM Autodesk Docs://2024-260 NPS ROMO Kawuneeche VC DD-CA wOtak/ROMO KVC Mech-Plumb.rvt

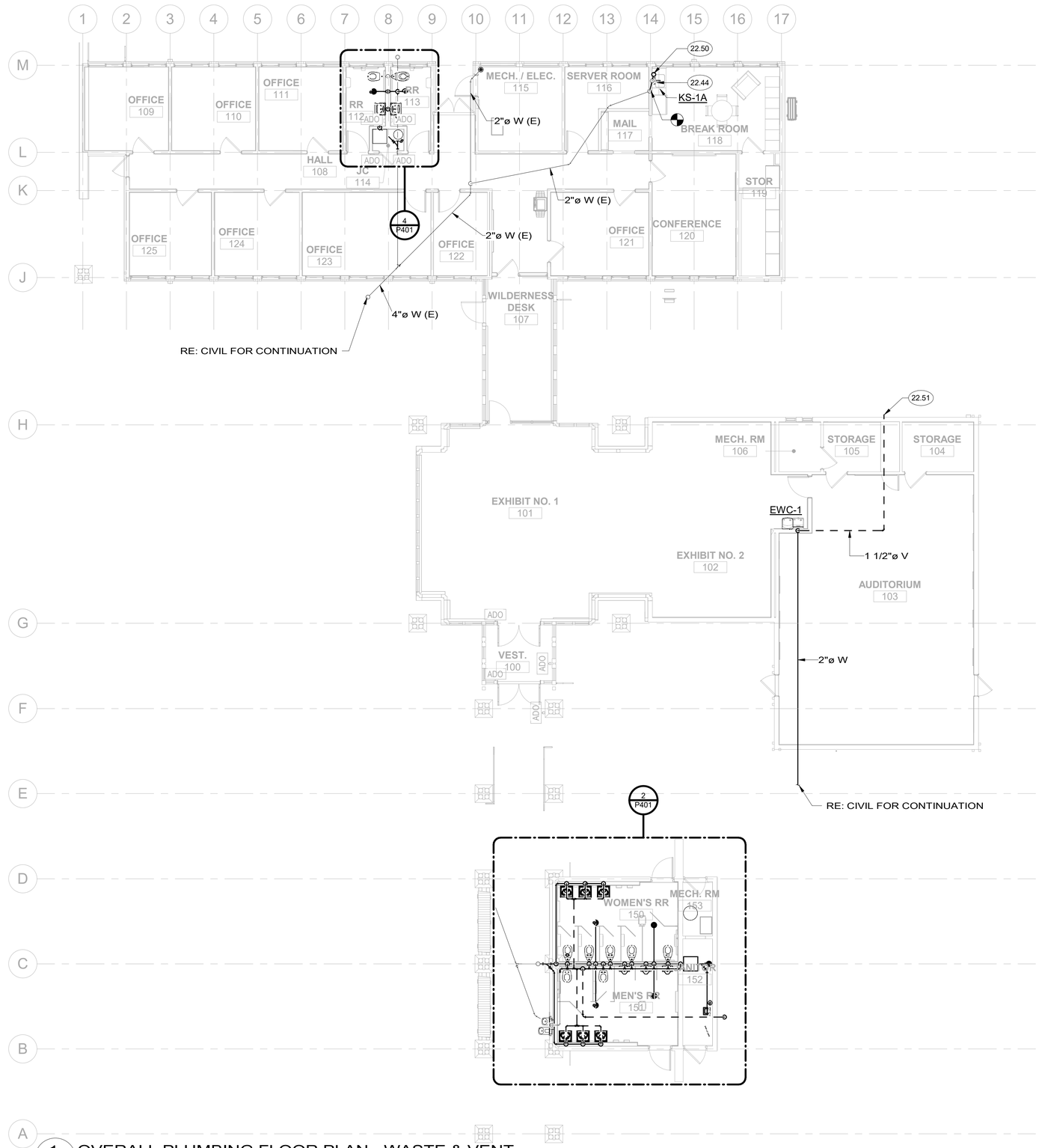

1 P121 OVERALL PLUMBING FLOOR PLAN - WASTE & VENT
SCALE A

KEYNOTES:

22.44 ROUTE WASTE TO CONNECT TO EXISTING. ROUTE ABOVE SLAB IN CABINETRY IF POSSIBLE. VENT PIPING SHALL CONNECT TO EXISTING.

22.50 PROVIDE HUB DRAIN FOR WATER HEATER T&P RELIEF.

22.51 VENT THRU WALL AT THIS LOCATION WITH DOWNTURNED 90 DEG ELBOW. PAINTED TO MATCH BUILDING EXTERIOR. TERMINATION SHALL BE COVERED WITH 1/2" WIRE MESH.

SCALE: A 8 0 8 16 SCALE OF FEET

TRUE PLAN

COLORADO LICENSED PROFESSIONAL ENGINEER JAMES ROBERT SCHWEIGER 55863 01/16/26

AE FIRM	DESIGNED:	SUB SHEET NO.	TITLE OF SHEET	DRAWING NO.
PRIME: OTAK, INC. REDMOND, WA	JEG/MM	P121	OVERALL PLUMBING FLOOR PLAN - WASTE & VENT	121 165639
SUBCONTRACTOR: 360 ENGINEERING, INC. GOLDEN, CO	CADD JEG/MM		REHABILITATE KAWUNEECHE VISITOR CENTER ROCKY MOUNTAIN NATIONAL PARK	PMIS/PKG NO. 326235
	TECH REVIEW: SJR/DMD			SHEET 109 OF 177
	DATE: 01/16/2026			

1/7/2026 8:37:32 PM Autodesk Docs://2024-260 NPS ROMO Kawuneeche VC DD-CA wOtak/ROMO KVC Mech-Plumb.rvt

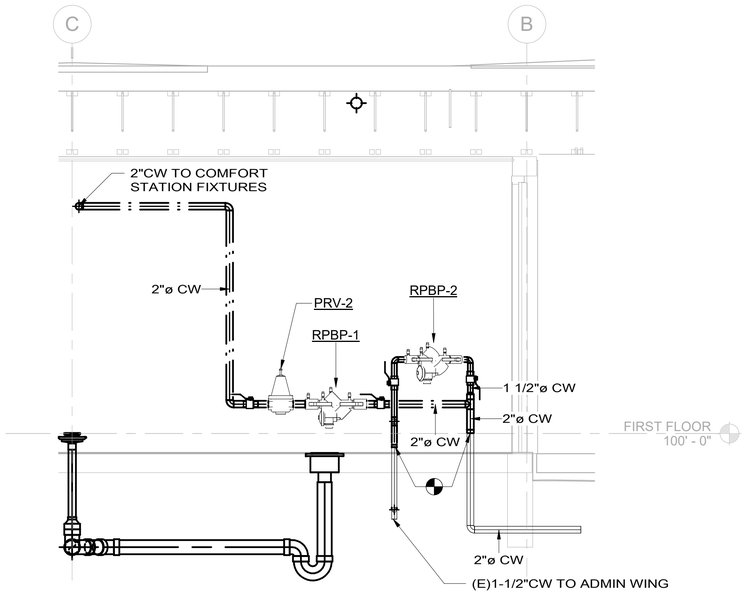

3 P300 COMFORT STATION WATER ENTRY - SECTION AA
SCALE D

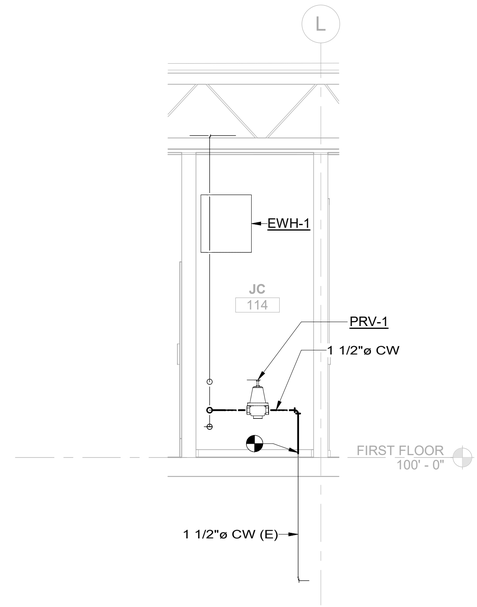

2 P300 JANITOR'S CLOSET WATER ENTRY - SECTION BB
SCALE D

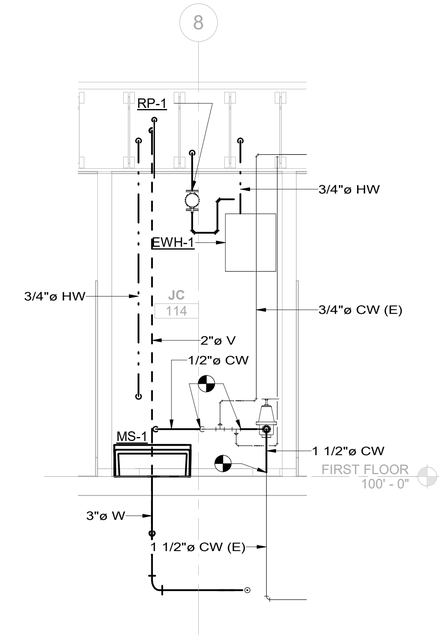

1 P300 JANITOR'S CLOSET WATER ENTRY - SECTION AA
SCALE D

SCALE: D 2 0 2 4
SCALE OF FEET

COLORADO LICENSED
JENNIFER JAMES RIOS
55863
01/16/26
PROFESSIONAL ENGINEER

AE FIRM	DESIGNED:	SUB SHEET NO.	TITLE OF SHEET	DRAWING NO.
PRIME: OTAK, INC. REDMOND, WA	JEG/MM	P300	PLUMBING SECTIONS	121 / 165639
SUBCONTRACTOR: 360 ENGINEERING, INC. GOLDEN, CO	CADD JEG/MM			PMIS/PKG NO. 326235
	TECH REVIEW: SJR/DMD		REHABILITATE KAWUNEECHE VISITOR CENTER ROCKY MOUNTAIN NATIONAL PARK	SHEET 110 OF 177
	DATE: 01/16/2026			

1/7/2026 8:37:37 PM Autodesk Docs://2024-260 NPS ROMO Kawuneeche VC DD-CA wOtak/ROMO KVC Mech-Plumb.rvt

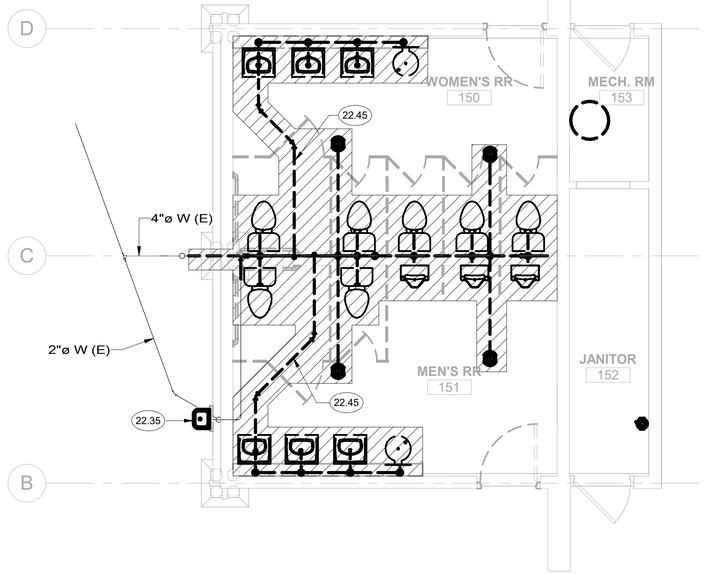

2 P400 ENLARGED DEMO PLUMBING FLOOR PLAN - WASTE & VENT - COMFORT STATION
SCALE B

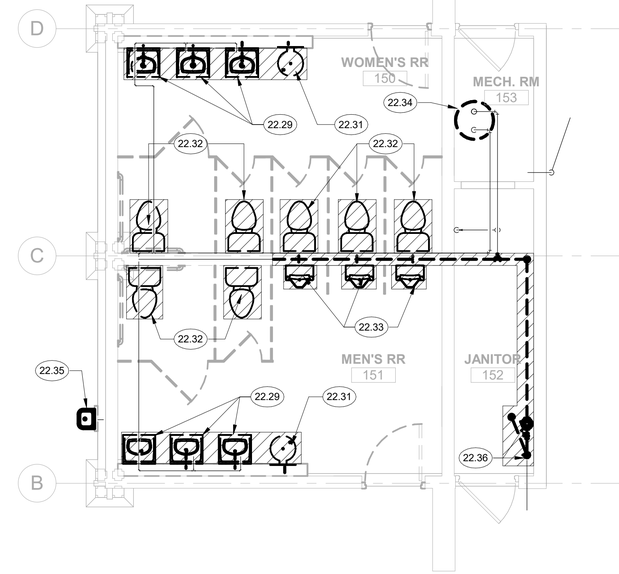

1 P400 ENLARGED DEMO PLUMBING FLOOR PLAN - DOMESTIC & GAS - COMFORT STATION
SCALE B

KEYNOTES:

22.29 EXISTING LAVATORY TO BE REMOVED. DISCONNECT EXISTING DOMESTIC WATER PIPING AND MAKE READY FOR CONNECTION TO NEW FIXTURE. SEE NEW WORK PLANS FOR DETAILS.

22.30 EXISTING WATER HEATER TO BE REMOVED. DISCONNECT ELECTRICAL CONNECTIONS PRIOR TO REMOVAL. DISCONNECT EXISTING HW AND CW CONNECTIONS AND MAKE READY FOR CONNECTION TO NEW WATER HEATER. SEE NEW WORK PLANS.

22.31 EXISTING DRINKING FOUNTAIN TO BE REMOVED. REMOVE EXISTING DOMESTIC WATER, SANITARY, AND VENT PIPING BACK TO THE MAIN.

22.32 EXISTING WATER CLOSET TO BE REMOVED. DISCONNECT EXISTING DOMESTIC WATER CONNECTIONS AND MAKE READY FOR CONNECTION TO NEW FIXTURE. SEE NEW WORK PLANS FOR DETAILS.

22.33 EXISTING URINAL TO BE REMOVED. DISCONNECT EXISTING DOMESTIC WATER PIPING AND MAKE READY FOR CONNECTION TO NEW FIXTURE. SEE NEW WORK PLANS FOR DETAILS.

22.34 EXISTING WATER HEATER TO BE REMOVED. DISCONNECT EXISTING DOMESTIC WATER AND GAS CONNECTIONS AND MAKE READY FOR CONNECTION TO NEW WATER HEATER. SEE NEW WORK PLANS FOR DETAILS.

22.35 EXISTING DRINKING FOUNTAIN TO BE REMOVED. DOMESTIC WATER, SANITARY, AND VENT CONNECTIONS SHALL BE MADE READY FOR RECONNECTION TO NEW FIXTURE.

22.36 EXISTING WATER SERVICE ENTRY PIPING, VALVES, ETC. TO BE REMOVED. SEE NEW WORK PLANS FOR NEW CONFIGURATION OF WATER SERVICE ENTRY.

22.45 WASTE AND VENT PIPING TO LAVATORIES AND DRINKING FOUNTAINS ARE SHOWN AS ASSUMPTIONS. CONTRACTOR SHALL VERIFY ROUTING PRIOR TO BEGINNING WORK AND NOTIFY CONTRACTING OFFICER OF ANY DISCREPANCIES. NEW WORK PIPING SHALL FOLLOW A SIMILAR ROUTING TO EXISTING

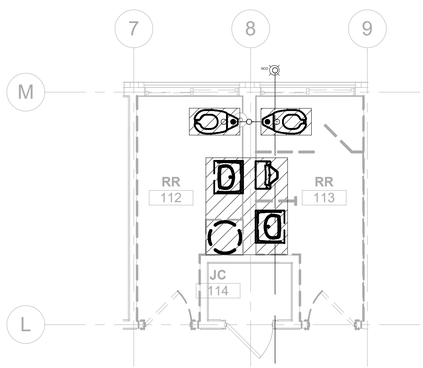

4 P400 ENLARGED DEMO PLUMBING FLOOR PLAN - WASTE & VENT - ADMIN RESTROOMS
SCALE B

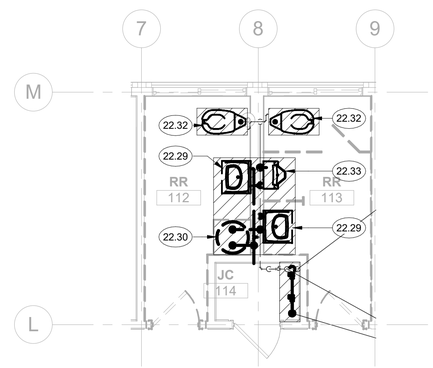

3 P400 ENLARGED DEMO PLUMBING FLOOR PLAN - DOMESTIC & GAS - ADMIN RESTROOMS
SCALE B

SCALE: B 4 0 4 8 SCALE OF FEET

TRUE PLAN

COLORADO LICENSED
SPENCER JAMES RIOS
55863
01/16/26
PROFESSIONAL ENGINEER

AE FIRM	DESIGNED:	SUB SHEET NO.	TITLE OF SHEET	DRAWING NO.
PRIME: OTAK, INC. REDMOND, WA	JEG/MM	P400	PLUMBING DEMO ENLARGED PLANS	121
	CADD JEG/MM			165639
SUBCONTRACTOR: 360 ENGINEERING, INC. GOLDEN, CO	TECH REVIEW: SJR/DMD		REHABILITATE KAWUNEECHE VISITOR CENTER ROCKY MOUNTAIN NATIONAL PARK	PMIS/PKG NO. 326235
	DATE: 01/16/2026			SHEET 111 OF 177

Autodesk Docs://2024-260 NPS ROMO Kawuneeche VC DD-CA wOtak/ROMO KVC Mech-Plumb.rvt
1/7/2026 8:37:44 PM

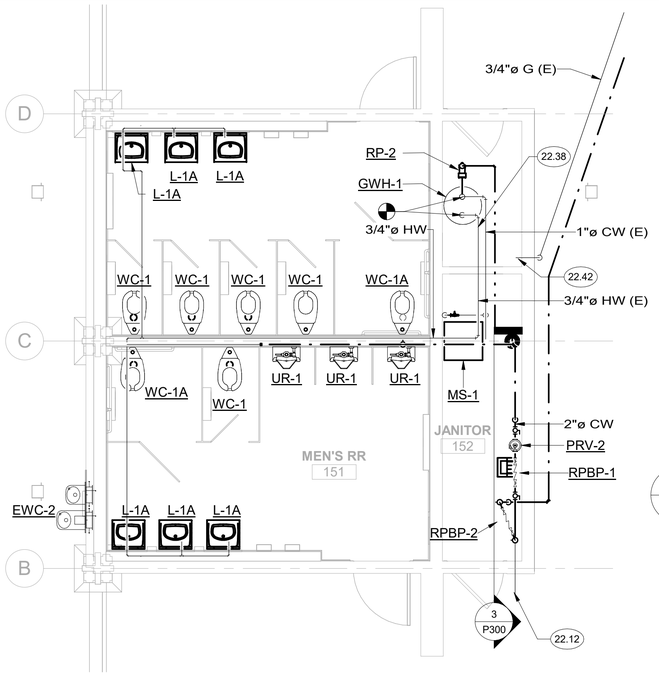

1 P401 ENLARGED PLUMBING FLOOR PLAN - DOMESTIC & GAS - COMFORT STATION
SCALE B

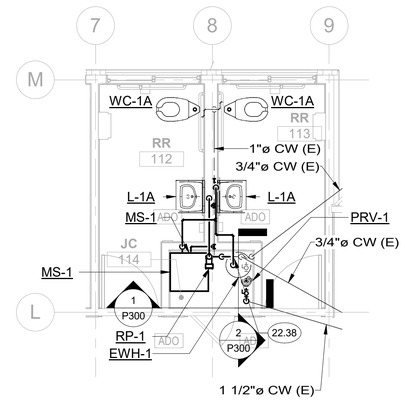

3 P401 ENLARGED PLUMBING FLOOR PLAN - DOMESTIC & GAS - ADMIN RESTROOMS
SCALE B

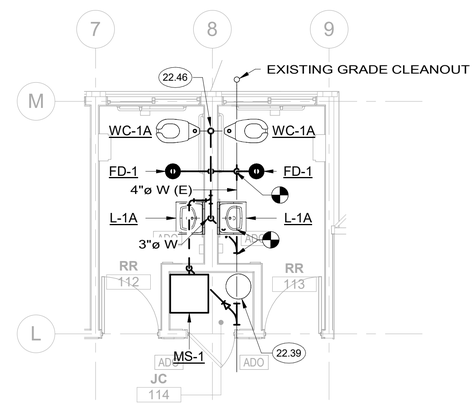

4 P401 ENLARGED PLUMBING FLOOR PLAN - WASTE & VENT - ADMIN RESTROOMS
SCALE B

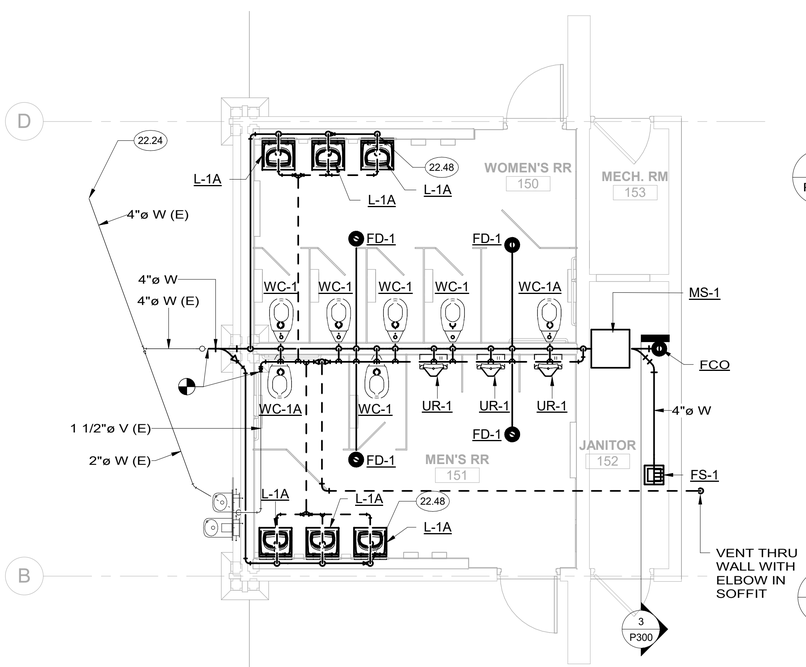

2 P401 ENLARGED PLUMBING FLOOR PLAN - WASTE & VENT - COMFORT STATION
SCALE B

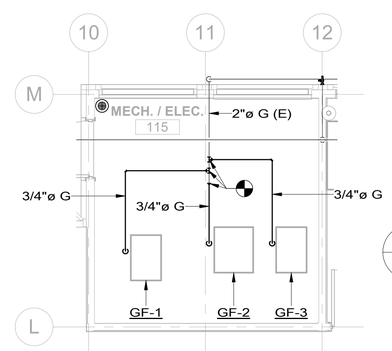

5 P401 ENLARGED PLUMBING FLOOR PLAN - DOMESTIC & GAS - 115 MECH
SCALE B

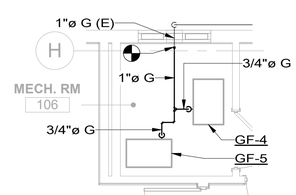

6 P401 ENLARGED PLUMBING FLOOR PLAN - DOMESTIC & GAS - 106 MECH
SCALE B

KEYNOTES:

22.12 WATER PIPING CONTINUES TO SUPPLY. RE: CIVIL FOR CONTINUATION.
22.24 WASTE PIPING TO DOWNSTREAM CONNECTION. RE: CIVIL FOR CONTINUATION.
22.38 INSTALL PLUMBING EXPANSION TANK (PET-1) AS SHOWN IN DETAIL 1/P500.
22.39 WATER HEATER P&T RELIEF AND DRAIN PAN DISCHARGE SHALL BE ROUTED TO MOP SINK. SEE DETAIL 1/P500.
22.42 EXTEND 3/4"G TO EACH FURNACE.
22.46 3" VTR. UTILIZE EXISTING ROOF PENETRATION.
22.48 PROVIDE WALL CLEANOUT UNDER LAVATORY.

SCALE: B 4 0 4 8 SCALE OF FEET

TRUE PLAN

COLORADO LICENSED PROFESSIONAL ENGINEER JAMES R. SPENCER 55863 01/16/26

AE FIRM	DESIGNED:	SUB SHEET NO.	TITLE OF SHEET	DRAWING NO.
PRIME: OTAK, INC. REDMOND, WA SUBCONTRACTOR: 360 ENGINEERING, INC. GOLDEN, CO	JEG/MM CADD JEG/MM TECH REVIEW: SJR/DMD DATE: 01/16/2026	P401	PLUMBING ENLARGED PLANS REHABILITATE KAWUNEECHE VISITOR CENTER ROCKY MOUNTAIN NATIONAL PARK	121 165639 PMIS/PKG NO. 326235 SHEET 112 OF 177

1/7/2026 8:37:48 PM Autodesk Docs://2024-260 NPS ROMO Kawuneeche VC DD-CA wOtak/ROMO KVC Mech-Plumb.rvt

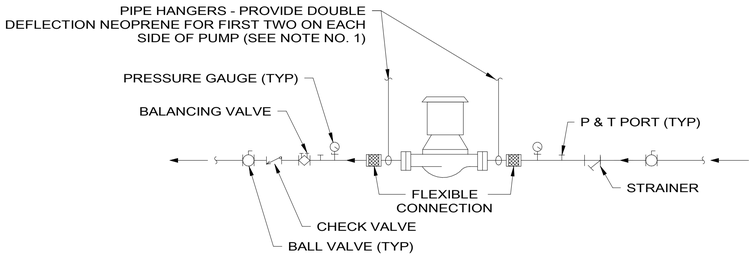

NOTES:

1. SUPPORT PUMP FROM PIPING ONLY. DO NOT SUPPORT PUMP FROM MOTOR.

6 / P500 HORIZONTAL IN-LINE PUMP DETAIL

NOT TO SCALE

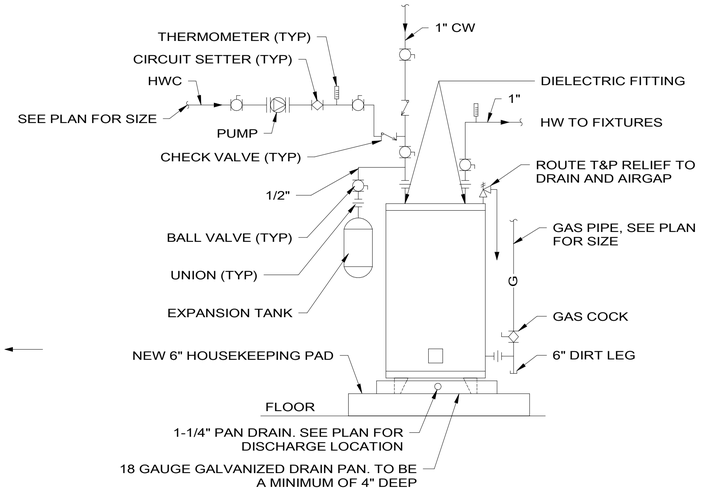

3 / P500 GAS WATER HEATER DETAIL

NOT TO SCALE

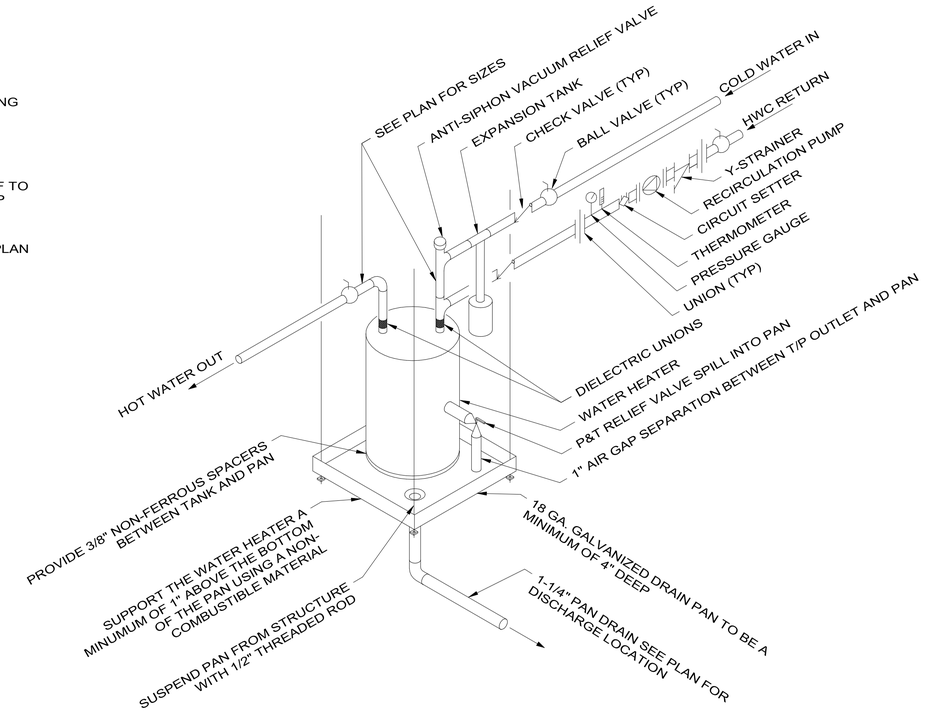

1 / P500 JANITOR CLOSET - ELECTRIC WATER HEATER DETAIL

NOT TO SCALE

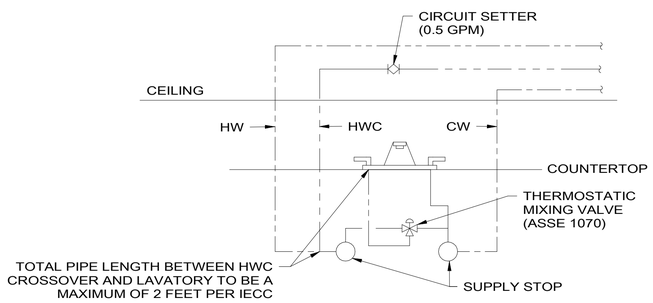

7 / P500 LAVATORY HOT WATER RECIRCULATION

NOT TO SCALE

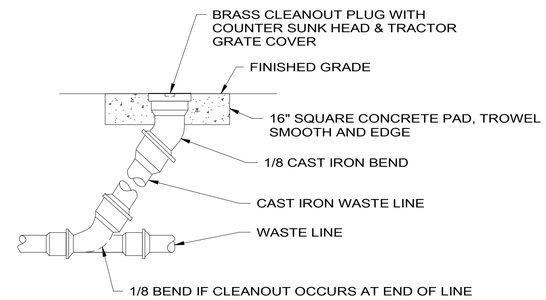

4 / P500 GRADE CLEANOUT DETAIL

NOT TO SCALE

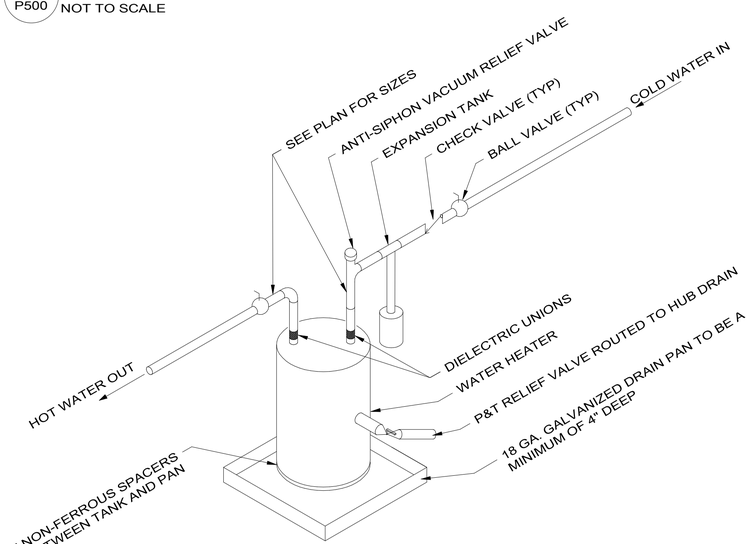

2 / P500 BREAK ROOM - ELECTRIC WATER HEATER DETAIL

NOT TO SCALE

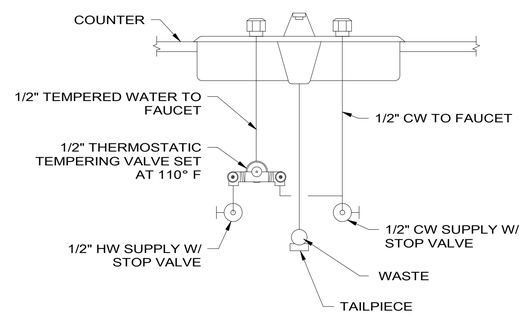

5 / P500 LOCAL MIXING VALVE DETAIL

NOT TO SCALE

COLORADO LICENSED PROFESSIONAL ENGINEER JAMES E. SWENKER 55863 01/16/26

AE FIRM	DESIGNED:	SUB SHEET NO.	TITLE OF SHEET	DRAWING NO.
PRIME: OTAK, INC. REDMOND, WA	JEG/MM	P500	PLUMBING DETAILS	121 165639
SUBCONTRACTOR: 360 ENGINEERING, INC. GOLDEN, CO	CADD JEG/MM			PMIS/PKG NO. 326235
	TECH REVIEW: SJR/DMD		REHABILITATE KAWUNEECHE VISITOR CENTER ROCKY MOUNTAIN NATIONAL PARK	SHEET 113 OF 177
	DATE: 01/16/2026			

1/7/2026 8:37:52 PM Autodesk Docs://2024-260 NPS ROMO Kawuneeche VC DD-CA wOtak/ROMO KVC Mech-Plumb.rvt

PLUMBING FIXTURE SCHEDULE / SALIENT CHARACTERISTICS

FIXTURE TAG	DESCRIPTION	BASIS OF DESIGN MANUFACTURER	BASIS OF DESIGN MODEL	FINISH	ACCESSORIES BASIS OF DESIGN MANUFACTURER	ACCESSORIES BASIS OF DESIGN MODEL	ACCESSORIES FINISH	INFO GPM/GPF	INFO ELECTRICAL	NOTES
EWC-1	ABA - ELECTRIC WATER COOLER HI/LO BOTTLE FILLER	HAWS	1119.14P	STAINLESS STEEL	-	-	-	-	120V/1PH	1,2,3,4
EWC-2	ABA - FREEZE RESISTANT HI/LO DRINKING FOUNTAIN AND BOTTLE FILLER	HAWS	1117P	STAINLESS STEEL	-	-	-	-	120V/1PH	1,2,3,4
FD-1	FLOOR DRAIN	JAY R SMITH	2005Y	NICKEL BRONZE	-	-	-	-	-	5,6,8
FS-1	FLOOR SINK	JAY R SMITH	3410-Y	WHITE - ACID RESISTANT	-	-	-	-	-	5,6,7,8
L-1A	ABA - WALL MOUNTED LAVATORY	AMERICAN STANDARD	0355.012	VITREOUS CHINA - WHITE	AMERICAN STANDARD	1340.227	CHROME	0.5 GPM	-	9,10,11,12,13
MS-1	MOP SINK BASIN	FIAT	MSB2424	WHITE	CHICAGO	445-897SRXKCCP	CHROME	2.2 GPM	-	14
RPBP-1	REDUCED PRESSURE BACKFLOW PREVENTER	WATTS	009	BRONZE	-	-	-	-	-	15
RPBP-2	REDUCED PRESSURE BACKFLOW PREVENTER	WATTS	009	BRONZE	-	-	-	-	-	15
S-1A	ABA - SINGLE COMPARTMENT KITCHEN SINK	AMERICAN STANDARD	20SB	STAINLESS STEEL	DELTA	9959-LS-DST	CHROME	1.8 GPM	-	16,17,18,19
UR-1	FLUSH VALVE URINAL	AMERICAN STANDARD	6590.001	VITREOUS CHINA - WHITE	AMERICAN STANDARD	6063.013.002	CHROME	0.125 GPF	-	20,21
WC-1	FLOOR MOUNTED FLUSH VALVE WATER CLOSET	AMERICAN STANDARD	2234.001	VITREOUS CHINA - WHITE	AMERICAN STANDARD	6065.121.002	CHROME	1.28 GPF	-	22,23,24
WC-1A	ABA - FLOOR MOUNTED FLUSH VALVE WATER CLOSET	AMERICAN STANDARD	3043.001	VITREOUS CHINA - WHITE	AMERICAN STANDARD	6065.121.002	CHROME	1.28 GPF	-	22,23,24,25

NOTES

DRINKING FOUNTAINS AND ELECTRIC WATER COOLERS

1. PROVIDE WITH CONCEALED FLOOR MOUNTED CARRIER (COORDINATE WITH WALL THICKNESS).
2. 17 GA. P-TRAP, LOOSE KEY ANGLE STOPS, STAINLESS STEEL BRAIDED SUPPLIES.
3. VANDAL PROOF.
4. PROVIDE WITH CANE DETECTION APRON TO BOTTOM OF HIGH FOUNTAIN.

FLOOR DRAINS AND SINKS

5. PROVIDE WITH TRAP GUARD.
6. MOUNT FLUSH WITH FLOOR.
7. 1/2 GRATE, DOME STRAINER.
8. BODY/CONNECTION MATERIAL TO MATCH WASTE PIPING.

LAVATORIES

9. 17 GA. P-TRAP, LOOSE KEY ANGLE STOPS, STAINLESS STEEL BRAIDED SUPPLIES.
10. PROVIDE MIXING VALVE UNDER FIXTURE. ASSE 1070 RATED.
    - MANUFACTURER/MODEL BASIS OF DESIGN: LEONARD #270-LF
11. PROVIDE WITH P-TRAP AND SUPPLIES INSULATION KIT.
    - MANUFACTURER/MODEL BASIS OF DESIGN: TRUEBRO #103 E-Z
12. PROVIDE WITH CONCEALED FLOOR MOUNTED CARRIER (COORDINATE WITH WALL THICKNESS).
13. SEE ARCHITECTURAL PLANS FOR MOUNTING HEIGHT.

MOP SERVICE BASIN

14. PROVIDE WITH HOSE AND HOSE BRACKET, MOP HANGER, SS WALL GUARD.

REDUCED PRESSURE BACKFLOW PREVENTER

15. PROVIDE WITH STRAINER.

NOTES

SINKS

16. 17 GA. P-TRAP, LOOSE KEY ANGLE STOPS, STAINLESS STEEL BRAIDED SUPPLIES.
17. PROVIDE MIXING VALVE UNDER FIXTURE. ASSE 1070 RATED.
    - MANUFACTURER/MODEL BASIS OF DESIGN: LEONARD #270-LF
18. PROVIDE WITH P-TRAP AND SUPPLIES INSULATION KIT.
    - MANUFACTURER/MODEL BASIS OF DESIGN: TRUEBRO #103 E-Z
19. 6" DEEP BOWL, REAR DRAIN LOCATION.

URINALS

20. PROVIDE WITH CONCEALED FLOOR MOUNTED CARRIER (COORDINATE WITH WALL THICKNESS).
21. SEE ARCHITECTURAL PLANS FOR MOUNTING HEIGHT.

WATER CLOSETS

22. LOOSE KEY ANGLE STOP, STAINLESS STEEL BRAIDED SUPPLIES.
23. FLUSHOMETER WATER CLOSET.
24. FLOOR MOUNTED WATER CLOSET WITH BOTTOM OUTLET.
25. PROVIDE FLUSH VALVE HANDLE ON OPEN SIDE OF FIXTURE AWAY FROM WALL FOR ABAAS ACCESS.

PLUMBING FIXTURE CONNECTION SCHEDULE

GENERAL TAG	CW [IN.]	HW [IN.]	HWC [IN.]	WASTE [IN.]	VENT [IN.]	NOTES
EWC-1	1/2"	-	-	2"	1-1/2"	-
EWC-2	1/2"	-	-	2"	1-1/2"	- -
FD-1	-	-	-	SEE DWGS	SEE DWGS	-
FS-1	-	-	-	SEE DWGS	SEE DWGS	-
L-1A	1/2"	1/2"	1/2"	1-1/2"	1-1/4"	1 -
MS-1	3/4"	3/4"	1/2"	3"	2"	-
RPBP-1	2"	-	-	-	-	-
RPBP-2	1-1/2"	-	-	-	-	-
S-1A	1/2"	1/2"	1/2"	1-1/2"	1-1/4"	-
UR-1	3/4"	-	-	2"	2"	- -
WC-1	1"	-	-	4"	2"	- -
WC-1A	1"	-	-	4"	2"	- -

NOTES

LAVATORIES

1. CONNECT HOT WATER RECIRCULATION TO HOT WATER LINE PER 2024 IECC TABLE C404.5.1.

GAS/ELECTRIC WATER HEATER SCHEDULE / SALIENT CHARACTERISTICS

GENERAL TAG	BASIS OF DESIGN MANUFACTURER	BASIS OF DESIGN MODEL	HEATING INPUT @ SEA LEVEL [BTU/H]	POWER [kW]	RECOVERY AT 90°F RISE	CAPACITY [GAL]	PHYSICAL HEIGHT [IN]	DIAMETER [IN.]	WEIGHT [LB]	ELECTRICAL VOLTAGE [V]	PHASE	NOTES
EWH-1	AO SMITH	DEL-20	-	2.5	11	20	22.25	21.75	73	240	1	1-2
EWH-2	AO SMITH	DEL-10	-	2.5	11	10	18.25	18	54	240	1	1-2
GWH-1	AO SMITH	BTX-80	76,000	-	95	50	71	27	225	120	1	3-6

NOTES

ELECTRIC WATER HEATER

1. PROVIDE WITH MAGNESIUM ANODE ROD
2. PROVIDE WITH EXPANSION TANK (PET-1)

GAS WATER HEATER

3. 3.5-14" W.C. GAS
4. PROVIDE WITH ACID NEUTRALIZATION KIT
5. 4" PVC INTAKE AND 4" VENT PER MANUFACTURER' RECOMMENDATIONS
6. PROVIDE WITH EXPANSION TANK (PET-1)

GENERAL NOTE:

BASIS OF DESIGN PRODUCTS LISTED IN THE SCHEDULES ESTABLISH THE QUALITIES AND CHARACTERISTICS FOR THE EVALUATION OF PRODUCT SUBSTITUTIONS BY THE CONTRACTING OFFICER. QUALITIES AND CHARACTERISTICS ARE LISTED FOR THE BASIS OF DESIGN PRODUCT IN THE SCHEDULES AND/OR THE PROJECT SPECIFICATIONS.

PLUMBING MISCELLANEOUS SCHEDULE / SALIENT CHARACTERISTICS

GENERAL TAG	DESCRIPTION	MANUFACTURER	MODEL	NOTES
PET-1	PLUMBING EXPANSION TANK	ARMSTRONG	AST-12	1
PRV-1	PRESSURE REDUCING VALVE	WATTS	LF25AUB-Z3	2
PRV-2	PRESSURE REDUCING VALVE	WATTS	LF25AUB-Z3	3

NOTES

PLUMBING EXPANSION TANKS

1. 3.3 GALLONS ACCEPTANCE VOLUME

PRESSURE REDUCING VALVES

2. 1-1/2" CONNECTION SIZE
3. 2" CONNECTION SIZE

PUMP SCHEDULE / SALIENT CHARACTERISTICS

GENERAL TAG	BASIS OF DESIGN MANUFACTURER	BASIS OF DESIGN MODEL	SYSTEM	PERFORMANCE FLOW [GPM]	HEAD [FT]	ELECTRICAL POWER [W]	NOTES
RP-1	BELL & GOSSETT	ECOCIRC+ 20-18	HOT WATER CIRCULATION	1.5	15	70	1-2
RP-2	BELL & GOSSETT	ECOCIRC+ 20-18	HOT WATER CIRCULATION	3.5	15	70	1-2

NOTES

RECIRCULATION PUMP

1. LEAD FREE BRONZE
2. PROVIDE WITH AQUASTAT AND TIMECLOCK TO RUN DURING OCCUPIED HOURS

COLORADO LICENSED PROFESSIONAL ENGINEER SPENCER JAMES RIOS 55863 01/16/26

AE FIRM	DESIGNED:	SUB SHEET NO.	TITLE OF SHEET	DRAWING NO.
PRIME: OTAK, INC. REDMOND, WA SUBCONTRACTOR: 360 ENGINEERING, INC. GOLDEN, CO	JEG/MM CADD JEG/MM TECH REVIEW: SJR/DMD DATE: 01/16/2026	P600	PLUMBING SCHEDULES REHABILITATE KAWUNEECHE VISITOR CENTER ROCKY MOUNTAIN NATIONAL PARK	121 165639 PMIS/PKG NO. 326235 SHEET 114 OF 177

1/7/2026 8:37:52 PM Autodesk Docs://2024-260 NPS ROMO Kawuneeche VC DD-CA wOtak/ROMO KVC Mech-Plumb.rvt

COMFORT STATION

WATER SUPPLY FIXTURE UNIT CALCULATION (CALCULATIONS BASED ON IPC TABLE E103.3(2))

FIXTURE	NUMBER OF INSTANCES	COLD (WSFU)	HOT (WSFU)	TOTAL LOAD (WSFU)	TOTAL LOAD (WSFU)
WATER CLOSET (VALVE)	7	10	--	10	70
URINAL	3	5	--	5	15
LAVATORY	6	1.5	1.5	2	12
MOP SINK BASIN	1	3	3	4	4
DRINKING FOUNTAIN	3	0.25	--	0.25	0.75
HOSE BIB	3	5	--	5	15
TOTAL					**117**

117 WSFU TOTAL -> 72 GPM. THE NEW SERVICE IS 2" AND CAN HANDLE A MAXIMUM FLOW RATE OF 85 GPM.

VISITOR CENTER + ADMIN WING

WATER SUPPLY FIXTURE UNIT CALCULATION (CALCULATIONS BASED ON IPC TABLE E103.3(2))

FIXTURE	NUMBER OF INSTANCES	COLD (WSFU)	HOT (WSFU)	TOTAL LOAD (WSFU)	TOTAL LOAD (WSFU)
WATER CLOSET (VALVE)	2	10	--	10	20
LAVATORY	2	1.5	1.5	2	4
KITCHEN SINK	1	3	3	4	4
MOP SINK BASIN	1	3	3	4	4
HOSE BIB	3	5	--	5	15
TOTAL					**47**

47 WSFU TOTAL -> 49 GPM. THE EXISTING SERVICE IS 1-1/2" AND CAN HANDLE A MAXIMUM FLOW RATE OF 50 GPM.

COMFORT STATION

SANITARY DRAINAGE FIXTURE UNIT CALCULATION
(CALCULATIONS BASED ON IPC TABLE 709.1)

FIXTURE	NUMBER OF INSTANCES	DFU UNITS	TOTAL LOAD
WATER CLOSET, FLUSH VALVE	7	4	28
URINAL, FLUSH VALVE	3	4	12
LAVATORY	6	1	6
MOP SERVICE BASIN	1	2	2
DRINKING FOUNTAIN	3	1	1.5
FLOOR DRAIN	6	2	12
TOTAL			61.5

EXISTING 4" WASTE MAIN CAN ACCEPT A 180 DFU CAPACITY AT 1/8" PER FOOT SLOPE

VISITOR CENTER + ADMIN WING

SANITARY DRAINAGE FIXTURE UNIT CALCULATION
(CALCULATIONS BASED ON IPC TABLE 709.1)

FIXTURE	NUMBER OF INSTANCES	DFU UNITS	TOTAL LOAD
WATER CLOSET, FLUSH VALVE	2	4	8
LAVATORY	2	1	2
SINK	1	2	2
MOP SERVICE BASIN	1	2	2
FLOOR DRAIN	2	2	4
TOTAL			18

EXISTING 4" WASTE MAIN CAN ACCEPT A 180 DFU CAPACITY AT 1/8" PER FOOT SLOPE

GAS CALCULATIONS (LINE SIZING PER IFGC TABLE 402.4(2))

NEW GAS LINE CONNECTED LOAD

EQUIPMENT	INPUT EACH AT SEA LEVEL (MBH)	INPUT EACH AT ALT (CFH)
(N) GWH-1	76	95
(N) GF-1	100	125
(N) GF-2	120	150
(N) GF-3	100	125
(N) GF-4	100	125
(N) GF-5	60	75
(N) GF-6	100	125
TOTAL LOAD (MBH)		656
TOTAL LOAD (CFH)		820
TOTAL EQUIVALENT LENGTH (FT)		65
SYSTEM DESIGN PRESSURE (PSI)		LESS THAN 2
SYSTEM DESIGN PRESSURE DROP (IN. W.C.)		0.5

820 CFH WITH THE ABOVE DESIGN VARIABLES EQUALS A 2" GAS MAIN.

COLORADO LICENSED
JENNIFER JAMES RIOS
55863
01/16/26
PROFESSIONAL ENGINEER

AE FIRM	DESIGNED:	SUB SHEET NO.	TITLE OF SHEET	DRAWING NO.
PRIME: OTAK, INC. REDMOND, WA	JEG/MM	P800	PLUMBING CALCS AND COMCHECK	121 / 165639
SUBCONTRACTOR: 360 ENGINEERING, INC. GOLDEN, CO	CADD JEG/MM		REHABILITATE KAWUNEECHE VISITOR CENTER ROCKY MOUNTAIN NATIONAL PARK	PMIS/PKG NO. 326235
	TECH REVIEW: SJR/DMD			SHEET 115 OF 177
	DATE: 01/16/2026			

1/7/2026 8:37:53 PM Autodesk Docs://2024-260 NPS ROMO Kawuneeche VC DD-CA wOtak/ROMO KVC Mech-Plumb.rvt

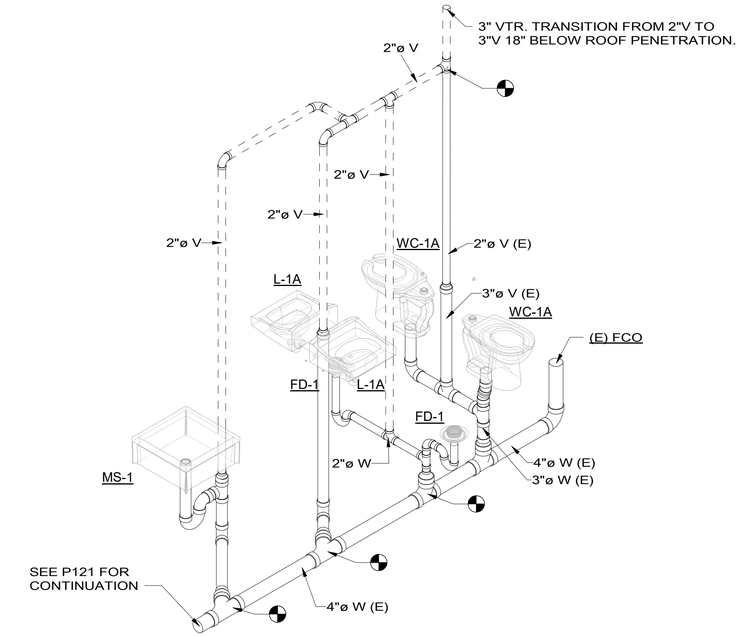

2 P900 WASTE & VENT ISO - ADMIN RESTROOMS
NOT TO SCALE

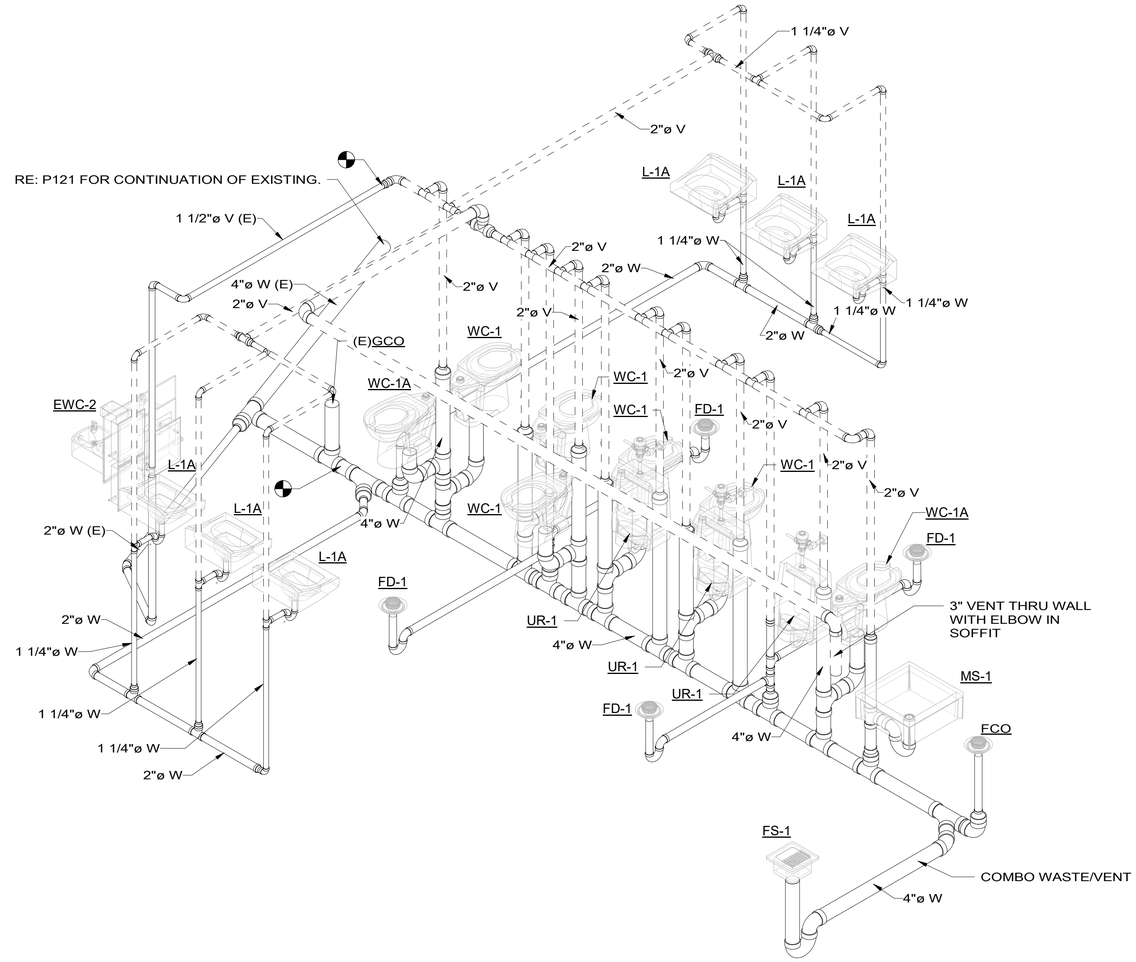

1 P900 WASTE & VENT ISO - COMFORT STATION
NOT TO SCALE

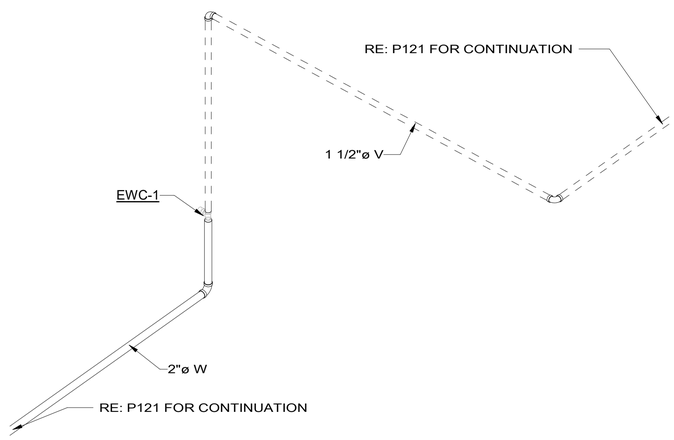

3 P900 WASTE & VENT ISO - EXHIBIT ELECTRIC WATER COOLER
NOT TO SCALE

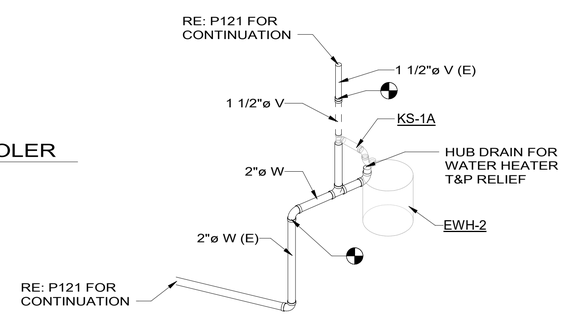

4 P900 WASTE & VENT ISO - BREAK ROOM SINK
NOT TO SCALE

COLORADO LICENSED
JEFFREY JAMES RIOUX
55863
01/16/26
PROFESSIONAL ENGINEER

AE FIRM	DESIGNED:	SUB SHEET NO.	TITLE OF SHEET	DRAWING NO.
PRIME: OTAK, INC. REDMOND, WA	JEG/MM	P900	PLUMBING WASTE AND VENT ISOMETRICS	121 165639
SUBCONTRACTOR: 360 ENGINEERING, INC. GOLDEN, CO	CADD JEG/MM		REHABILITATE KAWUNEECHE VISITOR CENTER ROCKY MOUNTAIN NATIONAL PARK	PMIS/PKG NO. 326235
	TECH REVIEW: SJR/DMD			SHEET 116 OF 177
	DATE: 01/16/2026			

1/7/2026 8:37:55 PM Autodesk Docs://2024-260 NPS ROMO Kawuneeche VC DD-CA wOtak/ROMO KVC Mech-Plumb.rvt

ELECTRICAL DEMOLITION REQUIREMENTS

1	THE BASIS OF THESE DRAWINGS WERE SITE OBSERVATIONS, ORIGINAL BUILDING DRAWINGS AND VARIOUS OTHER SOURCES. EVERY ATTEMPT HAS BEEN MADE TO DOCUMENT THE ACTUAL CONDITIONS. HOWEVER, THE CONTRACTOR SHALL CAREFULLY EXAMINE THE CONTRACT DOCUMENTS AND THOROUGHLY BECOME FAMILIAR WITH THE BUILDING/NPS STANDARDS RELATING TO THE WORK. FAILURE TO DO SO WILL NOT RELIEVE THE CONTRACTOR OF THE OBLIGATIONS OF THE CONTRACT.
2	THE ELECTRICAL CONTRACTOR SHALL NOTIFY THE CONTRACTING OFFICER OF ANY MATERIALS OR APPARATUS BELIEVED TO BE INADEQUATE, UNSUITABLE, IN VIOLATION OF LAWS, ORDINANCES, RULES OR REGULATIONS OF AUTHORITIES HAVING JURISDICTION.
3	THE ELECTRICAL CONTRACTOR SHALL INCLUDE IN THEIR COST THE REMOVAL OF ALL EXISTING ELECTRICAL DEVICES, CONDUITS, FIXTURES AND EQUIPMENT. DISCARD ALL EQUIPMENT AS REQUIRED, UNLESS NOTED OTHERWISE.
4	EXISTING DEVICES NOT NOTED AS EXISTING (E) OR INDICATED ON PLANS SHALL REMAIN, AS THEY PRESENTLY EXIST. FOR DEMOLISHED DEVICES IN WALLS WHICH ARE TO REMAIN, THE ELECTRICAL CONTRACTOR SHALL INSTALL A BLANK FACE PLATE ON THE BACKBOX. FOR DEMOLISHED DEVICES INSTALLED IN THE FLOOR, THE ELECTRICAL CONTRACTOR SHALL CUT THE FLOOR BOX FLUSH WITH THE FLOOR AND FILL WITH CONCRETE; COORDINATE WITH THE CONTRACTING OFFICER.
5	THE DEMOLITION OF SOME DEVICES MAY INTERRUPT POWER TO DEVICES DOWN STREAM. THE ELECTRICAL CONTRACTOR IS RESPONSIBLE FOR REWORKING THESE CIRCUITS TO MAINTAIN POWER TO THE DOWN STREAM DEVICES WHICH WILL REMAIN.
6	ALL UNENERGIZED/DEMOLISHED CIRCUITRY SHALL HAVE THE CONDUCTORS REMOVED FROM THE CONDUIT AND THE CONDUIT SHALL BE MARKED "EMPTY" WITH INDELIBLE MARKER.

HISTORIC MATERICAL CONSIDERATIONS

WOOD SLAT CEILING IN EXHIBIT HALL AREA IS A HISTORIC FABRIC AND SHALL NOT BE CUT/DRILLED/PENETRATED UNDER ANY CIRCUMSTANCES WITHOUT SPECIFIC APPROVAL AND COORDINATION WITH THE CONTRACTING OFFICER. EVERY EFFORT HAS BEEN MADE TO ENSURE THAT SPECIFIC LOCATIONS REQUIRING NEW OPENINGS ARE IDENTIFIED SPECIFICALLY. PHASING OF INSTALLATION OF EQUIPMENT SHALL BE COORDINATED WITH RE-INSTALLATION OF THE HISTORIC MATERIALS TO AVOID UNNECESSARY OPENINGS OR DAMAGE ASSOCIATED WITH THE CONSTRUCTABILITY OF THE SCOPE OF WORK.

ELECTRICAL GENERAL NOTES

1. THE CONTRACTOR SHALL PROVIDE ALL LABOR AND MATERIAL NECESSARY FOR A COMPLETE AND FUNCTIONING ELECTRICAL SYSTEM.
2. MATERIALS AND INSTALLATION SHALL COMPLY WITH CODES, LAWS AND ORDINANCES OF FEDERAL, STATE AND LOCAL GOVERNING BODIES HAVING JURISDICTION. CODES FOR THIS SCOPE OF WORK INCLUDE THE 2024 IBC AND IEBC, 2024 IECC, 2023 NEC, 2024 IFC, AND 2016 ASHRAE 90.1.
3. MATERIALS AND EQUIPMENT SHALL BE LISTED AND/OR LABELED BY U.L., ETL, CSA OR ANOTHER RECOGNIZED TESTING LAB.
4. ALL WORK REQUIRED FOR THE INSTALLATION AS SHOWN ON DRAWINGS INCLUDING LABOR, EQUIPMENT AND MATERIALS SHALL BE IN STRICT COMPLIANCE WITH THE BUILDING STANDARDS, EXCEPT AS NOTED OTHERWISE.
5. THE CONTRACTOR SHALL SECURE AND PAY FOR ALL PERMITS, GOVERNMENTAL FEES, TAXES AND LICENSES NECESSARY FOR THE PROPER EXECUTION AND COMPLETION OF THE ELECTRICAL WORK.
6. THE CONTRACTOR SHALL PREPARE AND SUBMIT TO GOVERNMENTAL AGENCIES AND UTILITY COMPANIES SHOP DRAWINGS, WHICH ARE REQUIRED BY THESE AGENCIES, FOR THEIR APPROVAL.
7. FOR ALL JOBS THAT INCLUDE DEMOLITION WORK BY THE ELECTRICAL CONTRACTOR, DURING AND AFTER DEMOLITION, EC SHALL MAINTAIN CIRCUIT CONTINUITY TO ALL EXISTING DEVICES THAT ARE TO REMAIN. EC SHALL REMOVE, RELOCATE, AND/OR REWORK ANY CONDUIT AND WIRING TO FACILITATE THE NEW CONSTRUCTION SCOPE OF WORK. FOR ALL LUMINAIRES THAT ARE EXISTING TO REMAIN OR EXISTING TO BE RELOCATED, EC SHALL CLEAN LENSES AND REPLACE ALL EXTINGUISHED LAMPS, UON.
8. ALL MATERIALS, AND EQUIPMENT SHALL BE ERECTED, INSTALLED, CONNECTED, CLEANED, ADJUSTED, TESTED, CONDITIONED, AND PLACED IN SERVICE IN ACCORDANCE WITH THE MANUFACTURER'S DIRECTIONS AND RECOMMENDATIONS.
9. ALL CUTTING, DRILLING AND PATCHING OF MASONRY, STEEL OR IRON WORK BELONGING TO THE BUILDING MUST BE DONE BY THIS CONTRACTOR IN ORDER THAT HIS WORK MAY BE PROPERLY INSTALLED, BUT UNDER NO CONDITIONS MAY STRUCTURAL MEMBERS BE CUT, EXCEPT AT THE DIRECTION OF THE CONTRACTING OFFICER.
10. ALL MATERIAL, EQUIPMENT, WIRING DEVICES, ETC. SHALL BE NEW, UNLESS SPECIFICALLY INDICATED AS EXISTING TO BE REUSED.
11. THE CONTRACTOR SHALL PROVIDE NEW TYPE WRITTEN PANEL DIRECTORIES FOR ALL NEW PANELS. PANELBOARD SHALL BE MARKED WHERE THE SOURCE OF POWER SUPPLY ORIGINATES.
12. DO NOT SHARE NEUTRAL CONDUCTORS FOR MULTIWIRE BRANCH CIRCUITS. WHERE THE E.C. PROPOSES THE USE OF SHARED NEUTRAL CONDUCTORS OR SHARED NEUTRAL CONDUCTORS ARE REQUIRED (SUCH AS POWERED FURNITURE SYSTEMS), HANDLE TIES SHALL BE PROVIDED ON THE CIRCUIT BREAKERS, WITH SHARED NEUTRALS, SUCH THAT IT WILL SIMULTANEOUSLY DISCONNECT ALL UNGROUNDED CONDUCTORS. ALL HANDLE TIES ARE REQUIRED TO BE INDICATED ON THE PANELBOARD SHOP DRAWINGS.
13. SHOULD ACTUAL FIELD CONDITIONS REQUIRE INDICATED CIRCUIT DESIGNATIONS TO VARY, INDICATE THE CIRCUIT NUMBER USED ON THE "AS-BUILT" DRAWINGS.
14. ALL SERVICE EQUIPMENT SHALL BE LEGIBLY MARKED IN THE FIELD BY THE ELECTRICAL CONTRACTOR WITH THE MAXIMUM AVAILABLE FAULT CURRENT AS INDICATED WITHIN THESE DOCUMENTS. THE FIELD MARKING(S) SHALL COMPLY WITH ELECTRICAL SPECIFICATIONS FOR READABILITY AND DURABILITY.
15. ALL NEW CIRCUITS SHALL HAVE A GROUND WIRE INSTALLED.
16. PER NPS REQUIREMENTS, ALL WIRING MUST BE INSTALLED IN CONDUIT (MINIMUM SIZE 3/4" UON).
17. ELECTRICAL CONTRACTOR SHALL PROVIDE ALL SPECIAL OUTLET BOXES THAT MAY BE REQUIRED TO ENCLOSE RECEPTACLES.
18. IN EXPOSED AND SUSPENDED CEILING APPLICATIONS, ROUTE CONDUIT AS CLOSE TO STRUCTURAL DECK AS POSSIBLE, AND SUPPORT CONDUIT AND JUNCTION BOXES DIRECTLY FROM THE STRUCTURAL DECK, OR FRAMING PROVIDED FOR THAT PURPOSE. BRANCH CIRCUIT CONDUITS SHALL NOT BE CLIPPED TO THE CEILING SYSTEM, UNLESS IT HAS BEEN SPECIFICALLY DESIGNED FOR THAT PURPOSE.
19. ALL EXPOSED CONDUIT SHALL BE CONCEALED TO THE GREATEST EXTENT POSSIBLE, AND SHALL BE INSTALLED PARALLEL AND CLOSE TO STRUCTURAL MEMBERS. GENERAL CONTRACTOR SHALL PAINT CONDUIT TO MATCH ADJACENT FINISHES.
20. PROVIDE LUMINAIRES SHOWN AS SHADED WITH EMERGENCY BATTERY BACKUP. EMERGENCY LUMINAIRES SHALL SENSE UNSWITCHED POWER TO THE SPACE AND OPERATED AUTOMATICALLY UPON LOSS OF NORMAL POWER. ALL EMERGENCY LUMINAIRES SHALL HAVE INTEGRAL TEST SWITCHES AND VISIBLE INDICATING LIGHTS. CONNECT THE EMERGENCY BATTERY BACKUP TO THE UN-SWITCHED LEG OF THE LIGHTING CIRCUIT INDICATED.
21. UNLESS OTHERWISE NOTED, LUMINAIRES DESIGNATED AS NIGHT LIGHT (NL) SHALL BE CONNECTED AHEAD OF LOCAL SWITCHING AND REMAIN ON 24 HOURS A DAY.
22. ALL DIMMED LIGHTING CIRCUITS ARE TO RECEIVE DEDICATED NEUTRALS. DO NOT SHARE NEUTRALS ON DIMMED LIGHTING CIRCUITS.
23. PROVIDE CONTRACTING OFFICER WITH A COMPLETE LISTING OF ALL LAMPS UTILIZED ON THE PROJECT INCLUDING MANUFACTURER AND CATALOG INFORMATION. PROVIDE A SUGGESTED SOURCE, INCLUDING CONTACT NAME AND PHONE NUMBER, FOR REORDERING.
24. THE CONTRACTOR SHALL VERIFY THE CEILING TYPE BEFORE ORDERING LIGHTING FIXTURES.
25. ROUGH-IN FOR MECHANICAL EQUIPMENT SHALL ONLY OCCUR AFTER MECHANICAL EQUIPMENT SUBMITTALS ARE THOROUGHLY REVIEWED FOR CHANGES. NOTIFY CONTRACTING OFFICER OF ANY DISCREPANCIES.
26. THE POWER AND CONTROL REQUIREMENTS FOR ALL EQUIPMENT CONNECTIONS SHALL BE CONFIRMED WITH APPROVED SHOP DRAWINGS PRIOR TO ELECTRICAL ROUGH-IN. FINAL POWER REQUIREMENTS, DIMENSIONED ROUGH-IN LOCATIONS, LOW VOLTAGE SYSTEM CONNECTIONS, ETC. SHALL BE CONFIRMED AND MODIFIED AS REQUIRED.
27. ALL EXISTING ELECTRICAL SERVICES NOT SPECIFICALLY INDICATED TO BE REMOVED OR ALTERED SHALL REMAIN AS THEY PRESENTLY EXIST.
28. G.C. SHALL INCLUDE IN HIS COST THE REMOVAL OF ALL EXISTING ELECTRICAL DEVICES, CONDUITS, FIXTURES AND EQUIPMENT. TURN EQUIPMENT OVER TO CONTRACTING OFFICER AS INDICATED OR RECYCLE/DISCARD ALL EQUIPMENT AS REQUIRED. E.C. SHALL BE RESPONSIBLE FOR DISCONNECTING PRIMARY SERVICE AND TEMPORARY POWER.
29. ALL CIRCUIT BREAKERS IN NEW ELECTRICAL PANELS TO BE BOLT ON TYPE WITH TRIP INDICATOR.

LIGHTNING PROTECTION SYSTEM NOTES

ELECTRICAL CONTRACTOR SHALL PROVIDE AND INSTALL A LIGHTNING PROTECTION SYSTEM WITH AN UNDERWRITER'S LABORATORIES LISTED MASTER C LABEL. REFER TO PERFORMACE SPECIFICATION SECTION 26 4113 FOR SYSTEM REQUIREMENTS. COORDINATE ALL AIR TERMINAL LOCATIONS ON ROOF WITH CONTRACTING OFFICER WHILE DEVELOPING SUBMITTALS. COORDINATE ALL DOWN CONDUCTOR LOCATIONS WITH CONTRACTING OFFICER AND MANUFACTURER DURING SUBMITTALS. SUBMITTALS REQUIRE FULL ROOF PLANS WITH ALL AIR TERMINALS (AND ALL OTHER EQUIPMENT) TO BE INDICATED FOR REVIEW PRIOR TO SUBMITTAL APPROVAL. SYSTEM SHALL BE INSTALLED IN A NEAT AND WORKMANLIKE MANNER. CONDUCTORS SHALL BE CONCEALED FROM VIEW TO THE GREATEST EXTENT POSSIBLE, WHERE VISIBLE, PROVIDE STRAIGHT RUNS, MINIMIZE LOOSE TURNS, AND PROVIDE SUPPORTS AT NO MORE THAN 3' INTERVALS. MAINTAIN A MINIMUM OF 8" BEND RADIUS ON ALL TURNS TO COMPLY WITH NFPA REQUIREMENTS.

COLORADO REGISTERED PROFESSIONAL ENGINEER
JOHN BROOKS
35717
01/08/2026

AE FIRM PRIME: OTAK, INC. REDMOND, WA SUBCONTRACTOR: AE DESIGN DENVER, CO	DESIGNED: AE DESIGN CADD TW/RS/BJLV TECH REVIEW: JM/JEB/MS DATE: 01/16/2026	SUB SHEET NO. E000	TITLE OF SHEET ELECTRICAL COVER SHEET REHABILITATE KAWUNEECHE VISITOR CENTER ROCKY MOUNTAIN NATIONAL PARK	DRAWING NO. 121 165639 PMIS/PKG NO. 326235 SHEET 117 OF 177

1/8/2026 2:58:13 PM Autodesk Docs://2024-260 NPS ROMO Kawuneeche VC DD-CA wOtak/NPS ROMO KAWUEECHE VISITOR CENTER - ELECTRICAL.rvt

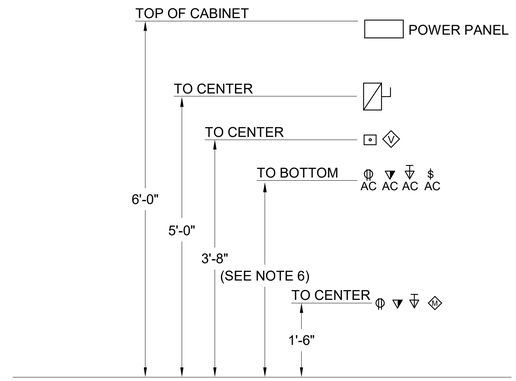

NOTES:

1. WHERE MULTIPLE LINE VOLTAGE DEVICES ARE SHOWN ADJACENT TO EACH OTHER, THEY ARE ALL TO SHARE THE SAME JUNCTION BOX, UP TO FOUR GANGS.
2. WHERE MORE THAN FOUR DEVICES ARE SHOWN ADJACENT TO EACH OTHER, DEVICES ARE TO STACK VERTICALLY ABOVE ONE ANOTHER IN TWO ROWS IN AS SMALL OF GANG BOXES AS POSSIBLE. I.E. SIX DEVICES WILL USE TWO THREE GANG BOXES, FIVE DEVICES WILL USE ONE THREE GANG AND ONE TWO GANG BOX.
3. SEPARATELY GANGED DEVICES ARE NOT ALLOWED TO BE INSTALLED ADJACENT TO ONE ANOTHER HORIZONTALLY WITHIN THE SAME STUD BAY.
4. ALL ELECTRICAL BOXES INSTALLED IN A WALL OR CEILING WITH A MINIMUM 1-HOUR FIRE-RESISTANCE RATING SHALL BE WRAPPED WITH AN INTUMESCENT MOLDABLE FIRESTOP PUTTY PAD DESIGNED TO HELP PROTECT ELECTRICAL OUTLET BOXES. INSTALL PER MANUFACTURERS LITERATURE.
5. ALL ELECTRICAL BOXES INSTALLED ON OPPOSITE SIDES OF A COMMON WALL, LESS THAN 24" HORIZONTAL SPACING, SHALL BE INSTALLED WITH A LAYER OF EXPANDABLE SPRAY FOAM INSULATION AROUND EACH ELECTRICAL BOX.
6. ALL ELECTRICAL BOXES/DEVICES SHALL BE INSTALLED TO MEET ABA MOUNTING HEIGHT REQUIREMENTS.

1 / E001 DEVICE MOUNTING HEIGHT

WIRING DEVICES

- DUPLEX RECEPTACLE
- FOUR PLEX RECEPTACLE
- SINGLE RECEPTACLE
- COMBO RECEPTACLE/SWITCH
- SWITCHED DUPLEX RECEPTACLE
- EMERGENCY POWERED DUPLEX RECEPTACLE
- SPECIAL PURPOSE RECEPTACLE
- FLOOR MOUNTED SPECIAL PURPOSE RECEPTACLE
- FLOOR MOUNTED RECEPTACLE DUPLEX/QUAD
- CEILING MOUNTED RECEPTACLE DUPLEX/QUAD
- SR — SURFACE RACEWAY
- JUNCTION BOX
- WALL MOUNTED J-BOX
- FLOOR MOUNTED JUNCTION BOX
- MOLDED CASE CIRCUIT BREAKER IN ENCLOSURE
- NON-FUSED DISCONNECT SWITCH
- FUSED DISCONNECT SWITCH
- MAGNETIC CONTROLLER (STARTER)
- HP — MOTOR
- TC — TIME CLOCK
- PC — PHOTOCELL
- $_{TO} — THERMAL OVERLOAD SWITCH
- $ — SINGLE POLE SWITCH, LINE VOLTAGE
- $_3 — 3-WAY SWITCH, LINE VOLTAGE
- $_4 — 4-WAY SWITCH, LINE VOLTAGE
- $_K — KEY OPERATED SWITCH
- $_D — DIMMER SWITCH, LINE VOLTAGE
- X — LIGHTING CONTROL DEVICE, REFER TO DETAILS FOR CONTROL INTENT

LIGHTNING PROTECTION SYSTEM

- LIGHTNING PROTECTION CABLE
- AIR TERMINAL (RE: #1,2,4/E405)
- ZONE OF PROTECTION FROM OTHER AIR TEMINALS
- GROUND TERMINAL (RE: #3,5,6/E405)
- THRU ROOF PENETRATION
- BONDING CONNECTION

DISTRIBUTION AND RACEWAY

- MDC — MAIN DISTRIBUTION CENTER (MDC)
- SURFACE MTD PANELBOARD
- RECESSED PANELBOARD
- T — TRANSFORMER
- BRANCH CIRCUIT HOMERUN
- CONDUIT CONCEALED IN FLOOR OR UNDERGROUND
- CONDUIT EXPOSED OR CONCEALED IN WALL OR CEILING
- RACEWAY UP
- RACEWAY DOWN
- CAPPED CONDUIT
- CURRENT TRANSFORMER
- CIRCUIT BREAKER SWITCH
- FUSED SWITCH
- GROUNDING ELECTRODE CONDUCTOR
- M — METER
- GFP — GROUND FAULT PROTECTION

LIGHTING FIXTURES

- $A1_a$ — LUMINAIRE TYPE, REFERENCING LUMINAIRE SCHEDULE TYPICAL ALL FIXTURES. SUBSCRIPT, IF SHOWN, REFERENCES WALL SWITCH OR RELAY/ZONE CONTROL
- WALL MOUNTED LUMINAIRE
- SURFACE OR PENDANT MOUNTED LUMINAIRE
- RECESSED LUMINAIRE
- RECESSED DOWNLIGHT LUMINAIRE
- SURFACE CEILING LUMINAIRE
- PENDANT LUMINAIRE
- ARROW INDICATES DIRECTIONAL LUMINAIRE
- MONOPOINT LUMINAIRE
- SURFACE OR PENDANT TRACK LUMINAIRE
- EXIT LUMINAIRE - SHADED INDICATES FACE / DIRECTIONAL ARROWS AS SHOWN
- BATTERY PACK EMERGENCY LUMINAIRE
- HATCH INDICATES EMERGENCY LUMINAIRE
- EXTERIOR AREA LIGHT

ABBREVIATIONS AND SYMBOLS

A	AMPERE(S)
AC	ABOVE COUNTER
AFF	ABOVE FINISHED FLOOR
AFG	ABOVE FINISHED GRADE
AHJ	AUTHORITY HAVING JURISDICTION
AIC	AMPERES INTERRUPTING CAPACITY
ATS	AUTOMATIC TRANSFER SWITCH
BFF	BELOW FINISHED FLOOR
C	CONDUIT
CATV	CABLE TELEVISION
CB	CIRCUIT BREAKER
CT	CURRENT TRANSFORMER
DISC	DISCONNECT
DW	DISHWASHER
DWG(S)	DRAWING(S)
(E)	EXISTING TO REMAIN
EC	ELECTRICAL CONTRACTOR
EF	EXHAUST FAN
(EL)	EXISTING LOCATION TO BE REUSED
(ER)	EXISTING TO BE RELOCATED
EM	EMERGENCY
EPO	EMERGENCY POWER OFF
EWC	ELECTRIC WATER COOLER
F	FUSE
FLA	FULL LOAD AMPS
FS	SPRINKLER FLOW SWITCH
G	GROUND
GC	GENERAL CONTRACTOR
GD	GARBAGE DISPOSAL
GFI	GROUND FAULT CIRCUIT INTERRUPTER
GFP	GROUND FAULT PROTECTION
HP	HORSEPOWER
IDF	INTERMEDIATE DISTRIBUTION FACILITY
IG	ISOLATED GROUND
ISC	SHORT CIRCUIT CURRENT
KVA	KILOVOLT AMPERE(S)
KW	KILOWATT(S)
LTG	LIGHTING
MCA	MINIMUM CIRCUIT AMPERE(S)
MCB	MAIN CIRCUIT BREAKER
MDP	MAIN DISTRIBUTION CENTER
MDF	MAIN DISTRIBUTION FACILITY
MLO	MAIN LUGS ONLY
MTS	MANUAL TRANSFER SWITCH
MW	MICROWAVE
NC	NORMALLY CLOSED
NL	NIGHT LIGHT - SEE GENERAL NOTES
NO	NORMALLY OPEN
OAE	OR APPROVED EQUAL
OH	OVERHEAD
P	POLE
PART	PARTIAL CIRCUIT
PH	PHASE
PNL	PANEL
RCPT	RECEPTACLE
REF	REFRIGERATOR
(R)	EXISTING TO BE REMOVED
(RL)	RELOCATED LOCATION
SPD	SURGE PROTECTION DEVICE
TS	SPRINKLER TAMPER SWITCH
UC	UNDER COUNTER/CABINET
UG	UNDERGROUND
UON	UNLESS OTHERWISE NOTED
V	VOLT(S)
W	WATT(S) OR WIRE
WG	WIRE GUARD
WP	WEATHERPROOF
XFMR	TRANSFORMER

- X/X — MECHANICAL EQUIPMENT SCHEDULE NOTATION
- X — DETAIL NOTE
- X — DELTA REVISION NOTE
- X — ELECTRICAL WIRE SIZE

COLORADO REGISTERED PROFESSIONAL ENGINEER 35717 01/08/2026

AE FIRM PRIME: OTAK, INC. REDMOND, WA SUBCONTRACTOR: AE DESIGN DENVER, CO	DESIGNED: AE DESIGN CADD TW/RS/BJLV TECH REVIEW: JM/JEB/MS DATE: 01/16/2026	SUB SHEET NO. E001	TITLE OF SHEET ELECTRICAL LEGENDS REHABILITATE KAWUNEECHE VISITOR CENTER ROCKY MOUNTAIN NATIONAL PARK	DRAWING NO. 121 165639 PMIS/PKG NO. 326235 SHEET 118 OF 177

1/8/2026 2:58:14 PM Autodesk Docs://2024-260 NPS ROMO Kawuneeche VC DD-CA wOtak/NPS ROMO KAWUEECHE VISITOR CENTER - ELECTRICAL.rvt

1/8/2026 2:58:14 PM Autodesk Docs://2024-260 NPS ROMO Kawuneeche VC DD-CA wOtak/NPS ROMO KAWUEECHE VISITOR CENTER - ELECTRICAL.rvt

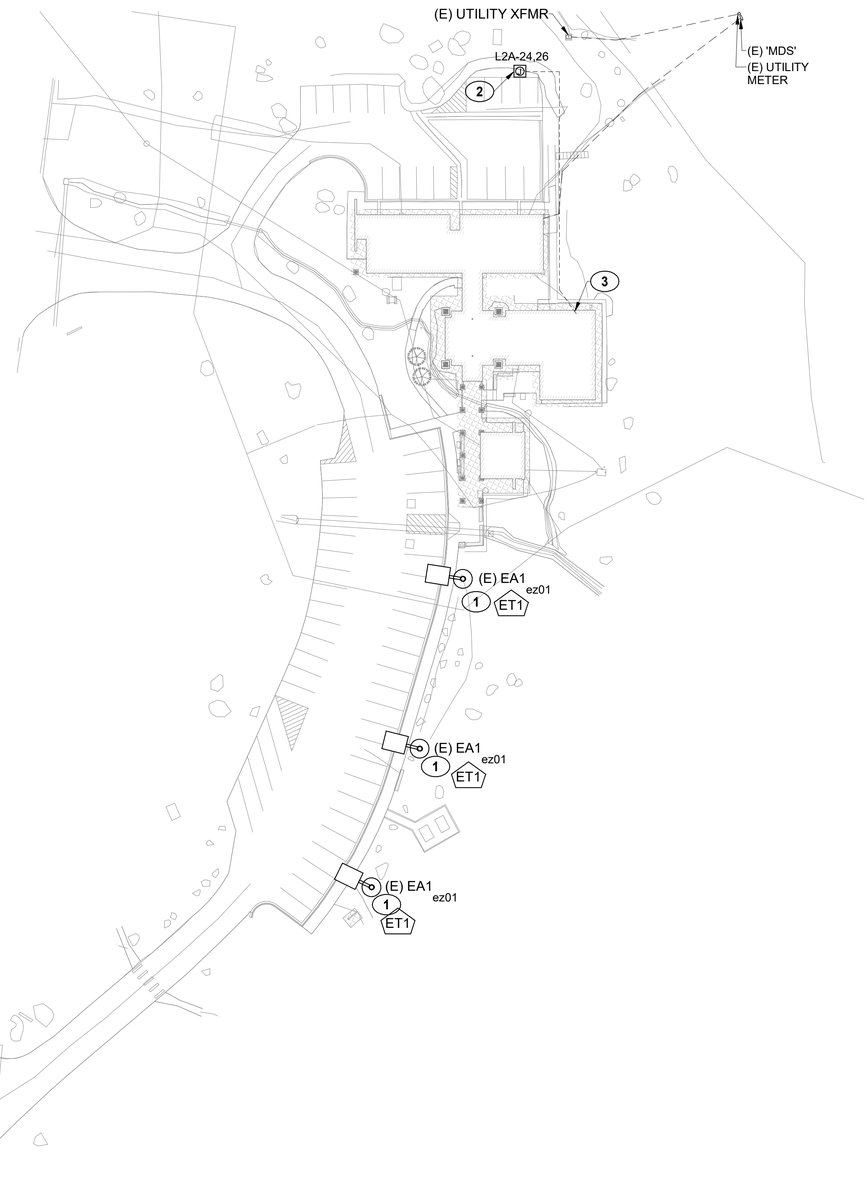

1 E002 ELECTRICAL SITE PLAN
SCALE A

KEYNOTE LEGEND

KEY VALUE	KEYNOTE TEXT
1	EXISTING HISTORIC SITE LIGHTING POLES SHALL BE RE-LAMPED AND GLASS GLOBE SHALL BE CLEANED BEFORE RE-INSTALLATION. FIXTURE COMPONENTS SHALL BE HANDLED WITH THE UTMOST CARE SUCH THAT REMAINING MATERIALS ARE NOT FURTHER IMPACTED OR DAMAGED DUE TO THE SCOPE OF THE WORK FOR REHABILITATION INDICATED. SEE FIXTURE SCHEDULE ON SHEET E402 FOR MORE INFORMATION. EC SHALL LOCATE REMOTE LIGHTING CONTROLLER UPSTREAM OF THE CIRCUIT, NEAR THE PANEL. EXISTING WIRING SHALL BE REUSED, AND SPLICES MADE AS NECESSARY TO INTEGRATE THE LIGHTING CONTROLLER. PROVIDE DETAILED PHOTO DOCUMENTATION OF HISTORIC FIXTURE PRIOR TO WORK COMMENCE TO CONTRACTING OFFICER FOR RECORD.
2	ABAAS COMPLIANT DUAL-PORT ELECTRIC VEHICLE SUPPLY EQUIPMENT (EVSE) INSTALLED SPACE. EC SHALL PROVIDE TRIANGULAR PEDESTAL/BOLLARD MOUNTED DUAL PORT, LEVEL 2, 7.7KW ELECTRIC VEHICLE CHARGING STATION. BASIS OF DESIGN SHALL BE BLINK CHARGING IQ 200 SERIES (OR APPROVED EQUAL), PROVIDE (1) DEDICATED 40-AMP, 240V, 1-PHASE ELECTRICAL CONNECTION (2#6, 1#8G, 1-1/4"C) AND (1) 1-1/4"C FOR FUTURE SECOND CONNECTION, ROUTED FROM PANEL INDICATED TO STUB-UP LOCATION AT NEW DUAL PORT CHARGING STATION. EC SHALL COORDINATE EXACT PEDESTAL LOCATION BETWEEN (2) ADJACENT PARKING STALLS WITH CONTRACTING OFFICER IN FIELD PRIOR TO INSTALLATION. CONTRACTING OFFICER SHALL VERIFY EQUIPMENT LOCATION AND SET-BACK DISTANCE FROM CURB WITH PARKING STALL CLEARANCE AS REQUIRED TO AVOID POTENTIAL DAMAGE FROM VEHICULAR IMPACT. CIRCUIT AS INDICATED. EC SHALL COORDINATE EXACT INSTALLATION REQUIREMENTS WITH MANUFACTURER'S INSTALLATION INSTRUCTIONS PRIOR TO COMMENCING WORK.
3	EC SHALL ROUTE CONDUIT ALONG EXTERIOR OF THE BUILDING, UP FROM GRADE ON EXTERIOR, AND SURFACE MOUNTED TO ENTER BUILDING INTO STORAGE 104 FOR FEED INTO PANEL 'L2A'. CONDUIT SHALL BE PAINTED TO MATCH EXTERIOR.

SCALE: A 40 0 40 80 SCALE OF FEET

TRUE PLAN

COLORADO REGISTERED PROFESSIONAL ENGINEER 35717 01/08/2026

AE FIRM PRIME: OTAK, INC. REDMOND, WA SUBCONTRACTOR: AE DESIGN DENVER, CO	DESIGNED: AE DESIGN CADD TW/RS/BJLV TECH REVIEW: JM/JEB/MS DATE: 01/16/2026	SUB SHEET NO. E002	TITLE OF SHEET ELECTRICAL SITE PLAN REHABILITATE KAWUNEECHE VISITOR CENTER ROCKY MOUNTAIN NATIONAL PARK

DRAWING NO. 121 / 165639
PMIS/PKG NO. 326235
SHEET 119 OF 177

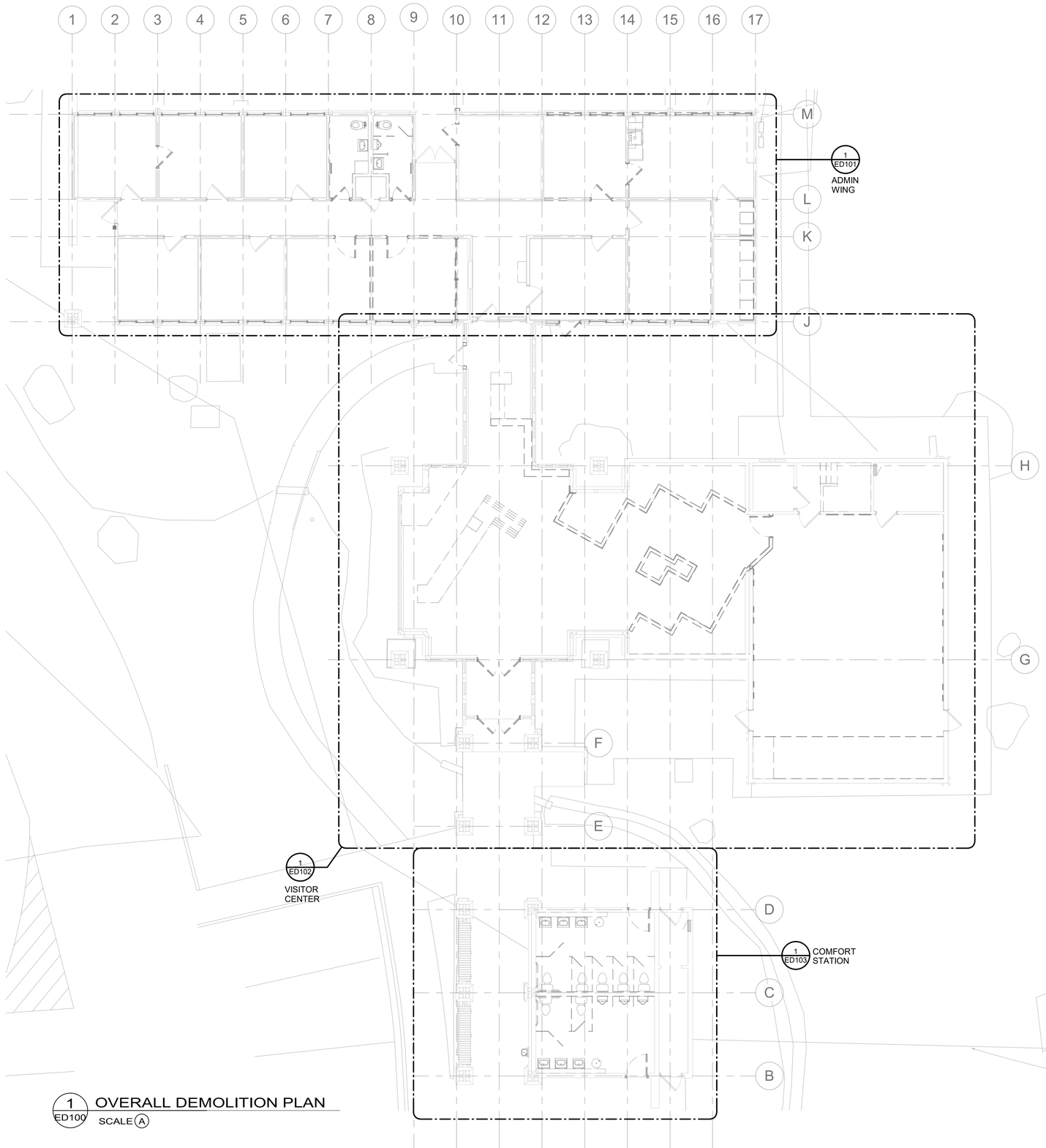

1 ED100 OVERALL DEMOLITION PLAN
SCALE A

SCALE: A 8 0 8 16 SCALE OF FEET

TRUE PLAN

COLORADO REGISTERED PROFESSIONAL ENGINEER 35717 01/08/2026

AE FIRM	DESIGNED:	SUB SHEET NO.	TITLE OF SHEET	DRAWING NO.
PRIME: OTAK, INC. REDMOND, WA	AE DESIGN	ED100	ELECTRICAL OVERALL DEMOLITION PLAN	121 165639
SUBCONTRACTOR: AE DESIGN DENVER, CO	CADD TW/RS/BJLV		REHABILITATE KAWUNEECHE VISITOR CENTER ROCKY MOUNTAIN NATIONAL PARK	PMIS/PKG NO. 326235
	TECH REVIEW: JM/JEB/MS			SHEET 120 OF 177
	DATE: 01/16/2026			

1/8/2026 2:58:15 PM Autodesk Docs://2024-260 NPS ROMO Kawuneeche VC DD-CA wOtak/NPS ROMO KAWUEECHE VISITOR CENTER - ELECTRICAL.rvt

DEMOLITION GENERAL NOTES

A.	LIGHT FIXTURE NOTED WITH (EL) SHALL MAINTAIN EXISTING LOCATION IN ORDER TO LIMIT IMPACT TO HISTORIC MATERIALS. LIGHT FIXTURE SHALL BE REMOVED AND REPLACED WITH NEW. CONDUIT SHALL BE MAINTAINED FOR REUSE WHILE HOUSING SHALL BE REMOVED. NEW BRANCH CIRCUIT FEEDERS SHALL BE PROVIDED. REFER TO NEW LIGHTING PLANS.
B.	ELECTRICAL DEVICES NOTED WITH (EL) SHALL MAINTAIN EXISTING LOCATION IN ORDER TO LIMIT IMPACT TO HISTORIC MATERIALS. DEVICE AND FACEPLATE SHALL BE REMOVED AND REPLACED WITH NEW. BACKBOX, IF PRESENT, AND CONDUIT SHALL BE MAINTAINED FOR REUSE. NEW BRANCH CIRCUIT FEEDERS SHALL BE PROVIDED. REFER TO NEW POWER PLANS.
C.	ALL DEVICES NOTED WITH (R) SHALL BE REMOVED. REMOVE ASSOCIATED CONDUIT AND WIRING BACK TO POINT OF ORIGIN. ABANDONED WIRING SHALL BE REMOVED. ABANDONED CONDUIT WILL BE ACCEPTABLE IN WALLS THAT ARE REMAINING.
D.	ALL CEILING MOUNTED SENSORS IN AREAS WHERE CEILING IS BEING DEMOLISHED AND REPLACED SHALL BE REMOVED. ABANDONED WIRING SHALL BE REMOVED.

KEYNOTE LEGEND

KEY VALUE	KEYNOTE TEXT
1	FIXTURE SHALL BE REMOVED AND TURNED OVER TO THE CONTRACTING OFFICER.
2	MAINTAIN EXISTING BACKBOX AND CONDUIT IN EXISTING LOCATION FOR REUSE FOR NEW DEVICE AND PRESERVE FINISH MATERIALS. REFER TO POWER PLANS FOR ADDITIONAL INFORMATION.
3	CONTRACTOR SHALL REMOVE DUAL GANG BACK BOX AND REPLACE WITH SINGLE GANG BACK BOX FOR NEW LIGHTING CONTROLS. CONTRACTOR SHALL PATCH AND FINISH THE WALL SURFACE TO MATCH ADJACENT CONDITIONS.
4	EC SHALL REMOVE ANY CEILING MOUNTED DEVICE IN THIS HALLWAY. REMOVE ASSOCIATED CONDUIT AND WIRING BACK TO POINT OF ORIGIN. ABANDONED WIRING SHALL BE REMOVED. ABANDONED CONDUIT WILL BE ACCEPTABLE IN WALLS THAT ARE REMAINING.

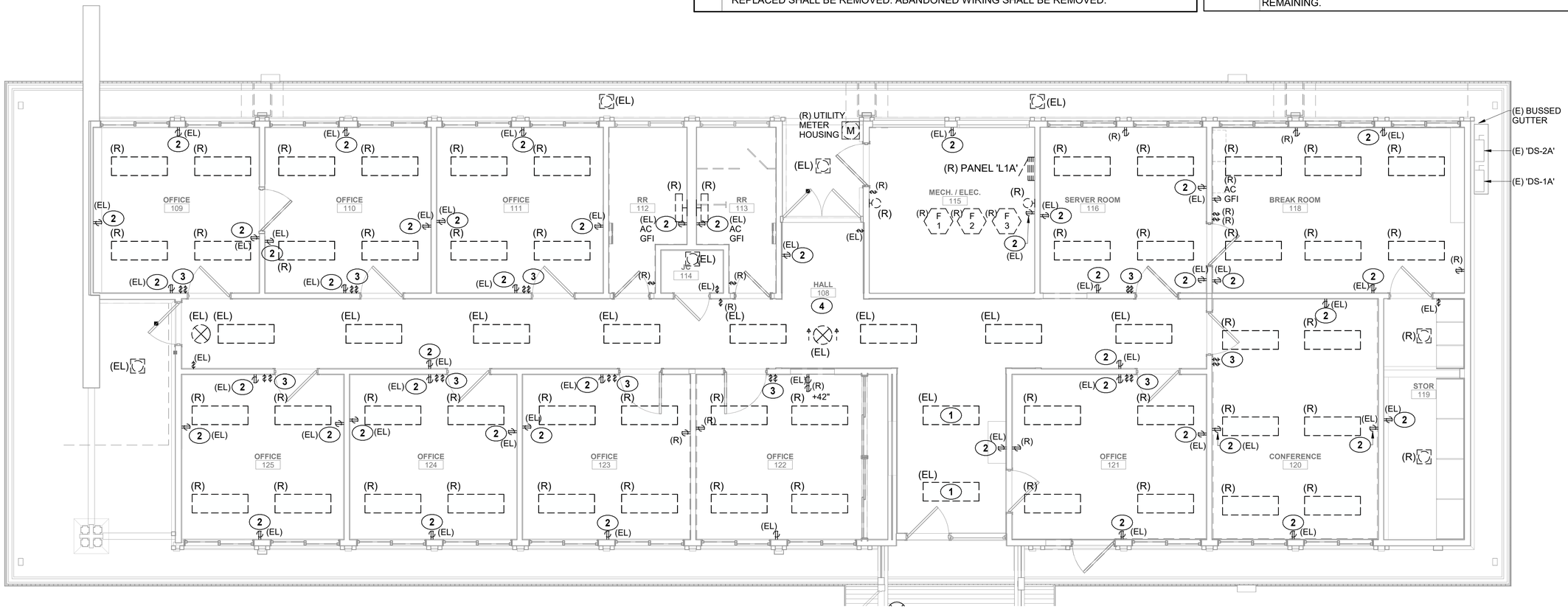

1 ED101 FIRST FLOOR DEMOLITION PLAN - ADMIN WING
SCALE B

SCALE: B 4 0 4 8 SCALE OF FEET

TRUE PLAN

COLORADO REGISTERED PROFESSIONAL ENGINEER 35717 01/08/2026

AE FIRM	DESIGNED:	SUB SHEET NO.	TITLE OF SHEET	DRAWING NO.
PRIME: OTAK, INC. REDMOND, WA	AE DESIGN	ED101	ELEC ENLARGED DEMOLITION PLAN - ADMIN WING	121 / 165639
SUBCONTRACTOR: AE DESIGN DENVER, CO	CADD: TW/RS/BJLV		REHABILITATE KAWUNEECHE VISITOR CENTER ROCKY MOUNTAIN NATIONAL PARK	PMIS/PKG NO. 326235
	TECH REVIEW: JM/JEB/MS			SHEET 121 OF 177
	DATE: 01/16/2026			

1/8/2026 2:58:16 PM Autodesk Docs://2024-260 NPS ROMO Kawuneeche VC DD-CA wOtak/NPS ROMO KAWUEECHE VISITOR CENTER - ELECTRICAL.rvt

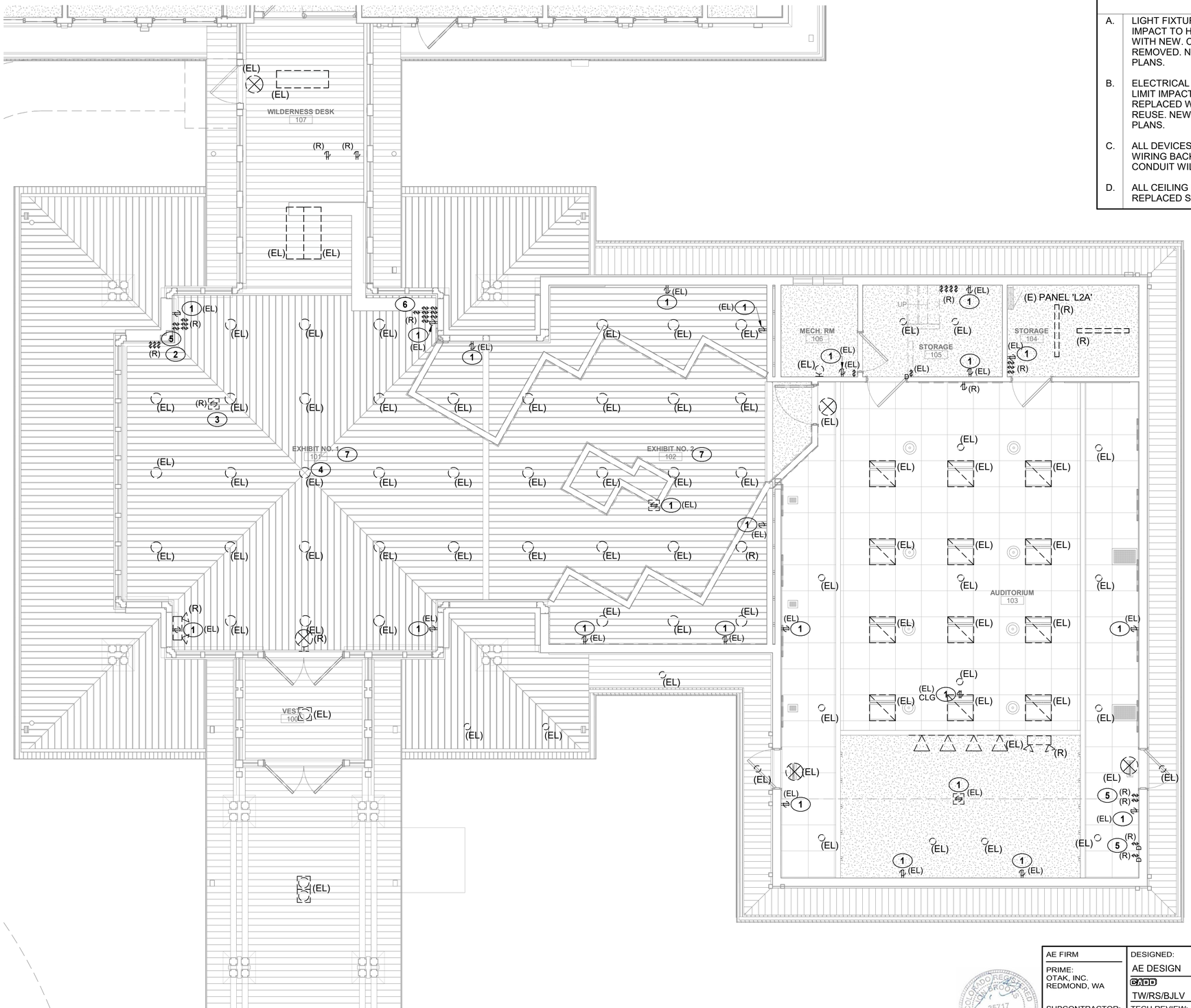

1 ED102 FIRST FLOOR DEMOLITION PLAN - AUDITORIUM & EXHIBIT

SCALE B

DEMOLITION GENERAL NOTES

A. LIGHT FIXTURE NOTED WITH (EL) SHALL MAINTAIN EXISTING LOCATION IN ORDER TO LIMIT IMPACT TO HISTORIC MATERIALS. LIGHT FIXTURE SHALL BE REMOVED AND REPLACED WITH NEW. CONDUIT SHALL BE MAINTAINED FOR REUSE WHILE HOUSING SHALL BE REMOVED. NEW BRANCH CIRCUIT FEEDERS SHALL BE PROVIDED. REFER TO NEW LIGHTING PLANS.

B. ELECTRICAL DEVICES NOTED WITH (EL) SHALL MAINTAIN EXISTING LOCATION IN ORDER TO LIMIT IMPACT TO HISTORIC MATERIALS. DEVICE AND FACEPLATE SHALL BE REMOVED AND REPLACED WITH NEW. BACKBOX, IF PRESENT, AND CONDUIT SHALL BE MAINTAINED FOR REUSE. NEW BRANCH CIRCUIT FEEDERS SHALL BE PROVIDED. REFER TO NEW POWER PLANS.

C. ALL DEVICES NOTED WITH (R) SHALL BE REMOVED. REMOVE ASSOCIATED CONDUIT AND WIRING BACK TO POINT OF ORIGIN. ABANDONED WIRING SHALL BE REMOVED. ABANDONED CONDUIT WILL BE ACCEPTABLE IN WALLS THAT ARE REMAINING.

D. ALL CEILING MOUNTED SENSORS IN AREAS WHERE CEILING IS BEING DEMOLISHED AND REPLACED SHALL BE REMOVED. ABANDONED WIRING SHALL BE REMOVED.

KEYNOTE LEGEND

KEY VALUE	KEYNOTE TEXT
1	MAINTAIN EXISTING BACKBOX AND CONDUIT IN EXISTING LOCATION FOR REUSE FOR NEW DEVICE AND PRESERVE FINISH MATERIALS. REFER TO POWER PLANS FOR ADDITIONAL INFORMATION.
2	NOAA MONITOR SHALL BE PROTECTED, REMOVED AND RELOCATED TO WILDERNESS DESK. SEE SHEET E102 FOR REINSTALLATION LOCATION. SEE KEYNOTES #2 AND #3, SHEET TD103 FOR MORE INFORMATION.
3	EC SHALL REMOVE ELECTRICAL AND LOW VOLTAGE CONNECTIONS TO LOBBY DESK. EXISTING CONNECTION IS SURFACE-MOUNTED CONDUIT ON THE FLOOR TO THE MILLWORK. EC SHALL PULL BACK CONDUCTORS AND REPAIR FLOOR FINISH WHERE SURFACE MOUNTED CONDUIT IS REMOVED. COORDINATE FINAL FINISH WITH CONTRACTING OFFICER.
4	CONTRACTOR SHALL REMOVE EXISTING CEILING FAN AND SAVE FOR RE-USE ONCE CEILING IS RE-INSTALLED. MAINTAIN EXISTING JUNCTION BOX LOCATION.
5	CONTRACTOR SHALL REMOVE ALL SWITCHES AND ASSOCIATED BACK BOX IN THIS AREA. ABANDONED CONDUIT MAY REMAIN IN WALLS THAT ARE TO BE RETAINED. CONTRACTOR SHALL PATCH AND FINISH THE WALL SURFACE TO MATCH ADJACENT CONDITIONS AS NECESSARY.
6	CONTRACTOR SHALL REMOVE ALL SWITCHES AND ASSOCIATED BACK BOX(ES) IN THIS AREA. CONTRACTOR SHALL INSTALL NEW BACK BOX(ES) AS REQUIRED FOR NEW LIGHTING CONTROLS. CONTRACTOR SHALL PATCH AND FINISH THE WALL SURFACE TO MATCH ADJACENT CONDITIONS AS NECESSARY. REFER TO ARCHITECTURAL DETAIL #8/A404 FOR DESIGN INTENT OF NEW DEVICES.
7	CONTRACTOR SHALL REMOVE ALL EXISTING DOWNLIGHTS IN EXHIBIT SPACE. CONTRACTOR SHALL UTILIZE EXISTING PLYWOOD CUTOUT LOCATIONS FOR FUTURE PLYWOOD CUTOUT LOCATIONS AS A TEMPLATE TO ENSURE EXACT LOCATIONS FOR RETROFIT DOWNLIGHTS. CONTRACTOR SHALL MAINTAIN EXISTING DOWNLIGHT CONDUITS FOR INSTALLATION OF NEW LIGHTS.

SCALE: B 4 0 4 8 SCALE OF FEET

TRUE PLAN

COLORADO REGISTERED PROFESSIONAL ENGINEER 35717 01/08/2026

AE FIRM	DESIGNED:	SUB SHEET NO.	TITLE OF SHEET	DRAWING NO.
PRIME: OTAK, INC. REDMOND, WA	AE DESIGN	ED102	ELEC ENLARGED DEMOLITION PLAN - AUDITORIUM/EXHIBIT	121 165639
SUBCONTRACTOR: AE DESIGN DENVER, CO	CADD TW/RS/BJLV		REHABILITATE KAWUNEECHE VISITOR CENTER ROCKY MOUNTAIN NATIONAL PARK	PMIS/PKG NO. 326235
	TECH REVIEW: JM/JEB/MS			SHEET 122 OF 177
	DATE: 01/16/2026			

1/8/2026 2:58:17 PM Autodesk Docs://2024-260 NPS ROMO Kawuneeche VC DD-CA wOtak/NPS ROMO KAWUEECHE VISITOR CENTER - ELECTRICAL.rvt

1/8/2026 2:58:18 PM Autodesk Docs://2024-260 NPS ROMO Kawuneeche VC DD-CA wOtak/NPS ROMO KAWUEECHE VISITOR CENTER - ELECTRICAL.rvt

DEMOLITION GENERAL NOTES

A. LIGHT FIXTURE NOTED WITH (EL) SHALL MAINTAIN EXISTING LOCATION IN ORDER TO LIMIT IMPACT TO HISTORIC MATERIALS. LIGHT FIXTURE SHALL BE REMOVED AND REPLACED WITH NEW. CONDUIT SHALL BE MAINTAINED FOR REUSE WHILE HOUSING SHALL BE REMOVED. NEW BRANCH CIRCUIT FEEDERS SHALL BE PROVIDED. REFER TO NEW LIGHTING PLANS.

B. ELECTRICAL DEVICES NOTED WITH (EL) SHALL MAINTAIN EXISTING LOCATION IN ORDER TO LIMIT IMPACT TO HISTORIC MATERIALS. DEVICE AND FACEPLATE SHALL BE REMOVED AND REPLACED WITH NEW. BACKBOX, IF PRESENT, AND CONDUIT SHALL BE MAINTAINED FOR REUSE. NEW BRANCH CIRCUIT FEEDERS SHALL BE PROVIDED. REFER TO NEW POWER PLANS.

C. ALL DEVICES NOTED WITH (R) SHALL BE REMOVED. REMOVE ASSOCIATED CONDUIT AND WIRING BACK TO POINT OF ORIGIN. ABANDONED WIRING SHALL BE REMOVED. ABANDONED CONDUIT WILL BE ACCEPTABLE IN WALLS THAT ARE REMAINING.

D. ALL CEILING MOUNTED SENSORS IN AREAS WHERE CEILING IS BEING DEMOLISHED AND REPLACED SHALL BE REMOVED. ABANDONED WIRING SHALL BE REMOVED.

KEYNOTE LEGEND

KEY VALUE	KEYNOTE TEXT
1	MAINTAIN EXISTING BACKBOX AND CONDUIT IN EXISTING LOCATION FOR REUSE FOR NEW DEVICE AND PRESERVE FINISH MATERIALS. REFER TO POWER PLANS FOR ADDITIONAL INFORMATION.
2	CONTRACTOR SHALL REPLACE WOOD PIECE AFTER REMOVAL OF LIGHT FIXTURE IN THIS LOCATION. CONTRACTOR SHALL COORDINATE EXACT DIMENSIONS AND FINISH WITH ARCHITECT PRIOR TO INSTALLATION.
3	EC SHALL INSTALL BRANCH FEEDS TO EXISTING PANEL DURING ROOF REPLACEMENT AND CARRY SUPPORT FOR POTENTIAL DRYWALL REPAIR.
4	EC SHALL REMOVE ELECTRICAL CONNECTIONS FOR HAND DRYERS AND COORDINATE REPAIR OF EXISTING WALLS.

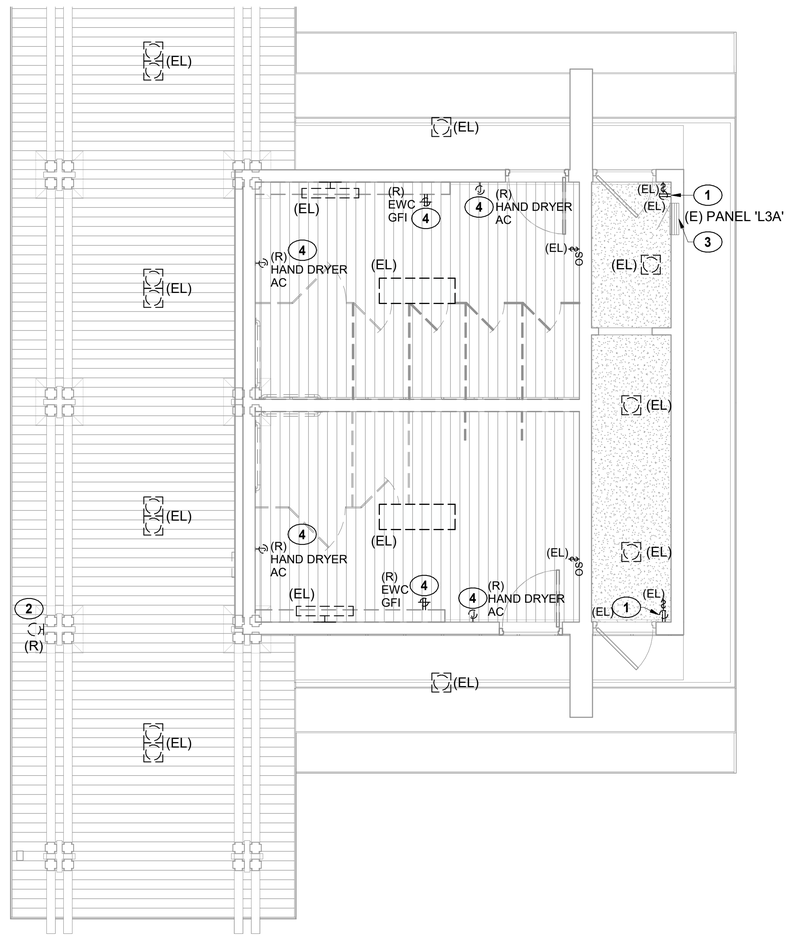

1 ED103 FIRST FLOOR DEMOLITION PLAN - COMFORT STATION
SCALE B

SCALE: B 4 0 4 8 SCALE OF FEET

TRUE PLAN

COLORADO REGISTERED PROFESSIONAL ENGINEER 35717 01/08/2026

AE FIRM	DESIGNED:	SUB SHEET NO.	TITLE OF SHEET	DRAWING NO.
PRIME: OTAK, INC. REDMOND, WA	AE DESIGN	ED103	ELEC ENLARGED DEMOLITION PLAN - COMFORT STATION	121 / 165639
SUBCONTRACTOR: AE DESIGN DENVER, CO	CADD: TW/RS/BJLV		REHABILITATE KAWUNEECHE VISITOR CENTER ROCKY MOUNTAIN NATIONAL PARK	PMIS/PKG NO. 326235
	TECH REVIEW: JM/JEB/MS			SHEET 123 OF 177
	DATE: 01/16/2026			

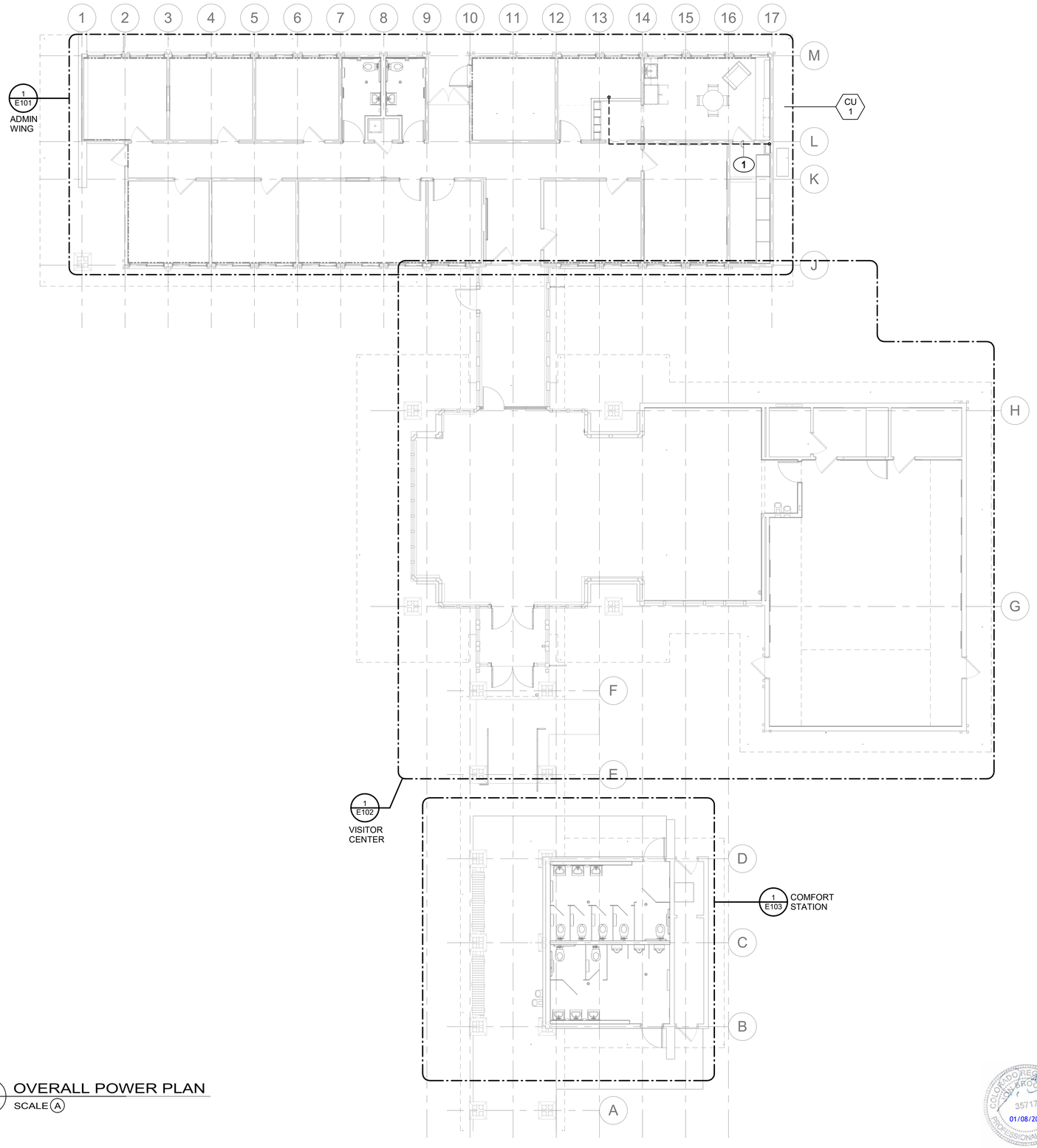

KEYNOTE LEGEND

KEY VALUE	KEYNOTE TEXT
1	APPROXIMATE ROUTING OF CONDUIT FROM INDOOR SPLIT SYSTEM UNIT AC-1 TO EXTERIOR SPLIT SYSTEM UNIT CU-1. ROUTE CONDUIT ABOVE CEILING WITHIN THE BUILDING TO CONDUIT CHASE IN STORAGE ROOM 119, BELOW GRADE TO CONDENSING UNIT PAD (ALONG SIMILAR PATH AS MECHANICAL PIPING AND WITHIN LIMITS OF CONCRETE WORK). PROVIDE (1) 1-1/2" CONDUIT. SEE MECHANICAL DRAWINGS FOR MORE INFORMATION.

1 / E100 OVERALL POWER PLAN
SCALE A

SCALE: A 8 0 8 16 SCALE OF FEET

TRUE PLAN

COLORADO REGISTERED PROFESSIONAL ENGINEER 35717 01/08/2026

AE FIRM	DESIGNED:	SUB SHEET NO.	TITLE OF SHEET	DRAWING NO.
PRIME: OTAK, INC. REDMOND, WA	AE DESIGN	E100	ELECTRICAL OVERALL POWER PLAN	121 / 165639
SUBCONTRACTOR: AE DESIGN DENVER, CO	CADD TW/RS/BJLV		REHABILITATE KAWUNEECHE VISITOR CENTER ROCKY MOUNTAIN NATIONAL PARK	PMIS/PKG NO. 326235
	TECH REVIEW: JM/JEB/MS			SHEET 124 OF 177
	DATE: 01/16/2026			

1/8/2026 2:58:19 PM Autodesk Docs://2024-260 NPS ROMO Kawuneeche VC DD-CA wOtak/NPS ROMO KAWUEECHE VISITOR CENTER - ELECTRICAL.rvt

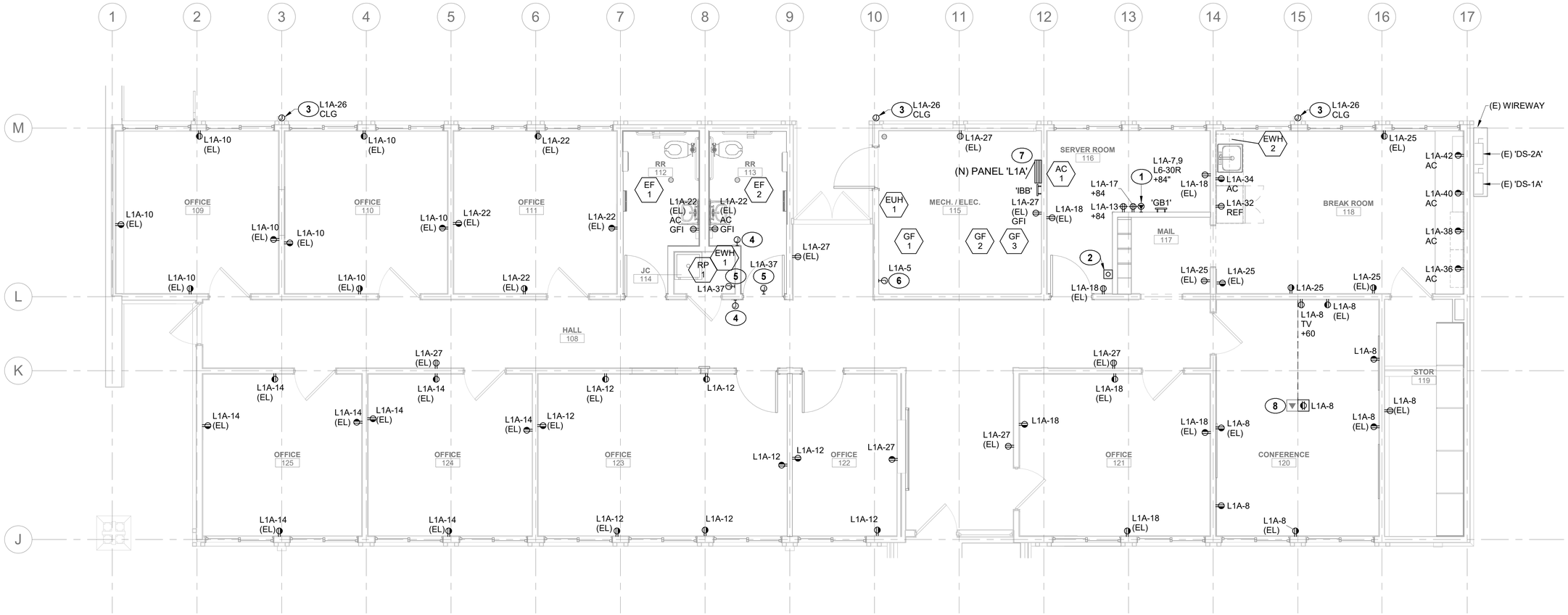

1 E101 ENLARGED POWER PLAN - ADMIN WING

SCALE B

KEYNOTE LEGEND

KEY VALUE	KEYNOTE TEXT
1	EC SHALL PROVIDE 240V, 1PH, 30A CONNECTION FED WITH 2#10, 1#10G, 3/4"C, TO A NEMA L6-30R RECEPTACLE FOR SERVER RACKS. CONFIRM NEMA AND WIRING WITH EQUIPMENT INSTALLATION MANUAL.
2	EC SHALL PROVIDE AN EMERGENCY POWER OFF (EPO) SYSTEM TO SHUTDOWN POWER TO ALL OUTLETS CONNECTED TO SERVER EQUIPMENT (VIA SHUNT TRIP BREAKERS) AS WELL AS SENDING A SIGNAL TO THE UPS TO OVERRIDE THE BATTERY BACKUP FUNCTION SUCH THAT A COMPLETE SHUTDOWN OF THE SERVER IS ACHIEVED. PROVIDE EPO WITH COVER TO PREVENT ACCIDENTAL SHUTDOWN OF SERVER EQUIPMENT AND REQUIRED SIGNAGE. REFER TO DETAILS #3 AND 4 SHEET E400 FOR MORE INFORMATION.
3	EC SHALL PROVIDE 120V/1PH, 20A CONNECTION FOR DOWNSPOUT HEAT CABLE DE-ICING SYSTEM. RUN 2#12, 1#12G, IN 3/4"C. PROVIDE GFEP CIRCUIT PROTECTION AT BREAKER PER NEC 426.28. SPECIFICATION TO BE 'EASY HEAT' #SR SERIES '52J', SELF REGULATING (OR APPROVED EQUAL). SYSTEM REQUIRES #SRP POWER CONNECTION AND #GC-1 MOISTURE/TEMP CONTROLLER. LAYOUT SHOWN IS FOR REFERENCE ONLY, AND SHOULD ONLY BE USED AS A BASIS FOR DESIGN. MAXIMUM CONTINUOUS RUN LENGTH SHALL BE NO MORE THAN 25FT PER DOWNSPOUT. AT DOWNSPOUT LOCATIONS, LOOP CABLE A MINIMUM OF 18" BELOW GRADE TO PREVENT ICE BUILDUP WITHIN DOWNSPOUT. COORDINATE EXACT INSTALLATION PER THE MANUFACTURER'S SPECIFICATIONS & SHOP DRAWINGS. J-BOX SHALL BE MOUNTED WITHIN SOFFIT FROM THE INTERIOR WITH NO IMPACT TO EXTERIOR SOFFIT MATERIALS. FIELD VERIFY WITH CONTRACTING OFFICER ON SITE.
4	RECESSED JUNCTION BOX WITH 3/4" CONDUIT ROUTED BACK TO MOTORIZED ASSIST PUSH PAD DEVICE INSTALLATION. COORDINATE EXACT LOCATION AND CONNECTION REQUIREMENTS WITH APPROVED SHOP DRAWINGS AND CONTRACTING OFFICER PRIOR TO ROUGH-IN.

KEYNOTE LEGEND

KEY VALUE	KEYNOTE TEXT
5	RECESSED JUNCTION BOX FOR 120V POWER CONNECTION TO MOTORIZED AUTOMATED ACCESS DOOR OPERATOR (PROVIDED BY OTHERS). EC SHALL MAKE ALL NECESSARY INTERCONNECTIONS BETWEEN JUNCTION BOX, OPERATOR MOTOR, AND PUSH PAD LOCATIONS PER MANUFACTURER'S REQUIREMENTS. COORDINATE EXACT LOCATIONS WITH APPROVED EQUIPMENT DRAWINGS. REFER TO KEYNOTE #4 FOR LOCATION OF ACTUATOR PUSH PAD. ALL REMOTE EQUIPMENT SHALL BE LOCATED IN JANITOR CLOSET 114. REFER TO ARCHITECTURAL SHEETS FOR MORE INFORMATION.
6	EC SHALL PROVIDE POWER CONNECTION FOR FIRE ALARM PANEL IN HALLWAY. COORDINATE EXACT LOCATION AND REQUIREMENTS WITH APPROVED FIRE ALARM SHOP DRAWINGS PRIOR TO ROUGH-IN.
7	EC SHALL MAINTAIN AND PRESERVE INCOMING ELECTRICAL CONDUIT TO PANEL 'L1A'. MECHANICAL DUCT CURRENTLY SUPPORTING CONDUIT SHALL BE REMOVED. EC SHALL REVISE CONDUIT SUPPORT FROM MECHANICAL DUCT TO STRUCTURE.
8	EC SHALL PROVIDE CONCRETE DUAL-SERVICE FLOOR BOX, SLAB ON GRADE, PROVISIONS FOR (1) DUPLEX, (1) 2-DATA, (1) USB, AND (1) HDMI CONNECTIONS. PROVIDE 3/4" CONDUIT FOR POWER AND 1-1/2" CONDUIT FOR AV TO TV WALL AND UP TO ABOVE ACCESSIBLE CEILING. COORDINATE FINAL LOCATION OF FLOORBOX WITH CONTRACTING OFFICER PRIOR TO ROUGH-IN.

POWER GENERAL NOTES

A	DEVICES NOTED WITH (EL) ADJACENT TO THE DEVICE SHALL MAINTAIN EXISTING LOCATION IN ORDER TO LIMIT IMPACT TO MATERIALS. RECEPTACLE DEVICE AND FACEPLATE TO BE REMOVED AND REPLACED WITH NEW. BACKBOX AND CONDUIT SHALL BE REUSED. REMOVE ASSOCIATED WIRING BACK TO PANELBOARD OF ORIGIN. NEW BRANCH CIRCUIT FEEDERS SHALL BE PROVIDED AS SHOWN.

SCALE: B

4 0 4 8
SCALE OF FEET

TRUE PLAN

COLORADO REGISTERED PROFESSIONAL ENGINEER 35717 01/08/2026

AE FIRM	DESIGNED:	SUB SHEET NO.	TITLE OF SHEET	DRAWING NO.
PRIME: OTAK, INC. REDMOND, WA SUBCONTRACTOR: AE DESIGN DENVER, CO	AE DESIGN CADD TW/RS/BJLV TECH REVIEW: JM/JEB/MS DATE: 01/16/2026	E101	ELEC ENLARGED POWER PLAN - ADMIN WING REHABILITATE KAWUNEECHE VISITOR CENTER ROCKY MOUNTAIN NATIONAL PARK	121 165639 PMIS/PKG NO. 326235 SHEET 125 OF 177

1/8/2026 2:58:20 PM Autodesk Docs://2024-260 NPS ROMO Kawuneeche VC DD-CA wOtak/NPS ROMO Kawuneeche VC DD-CA_ELECTRICAL.rvt

Autodesk Docs://2024-260 NPS ROMO Kawuneeche VC DD-CA wOtak/NPS ROMO KAWUEECHE VISITOR CENTER - ELECTRICAL.rvt

1/8/2026 2:58:25 PM

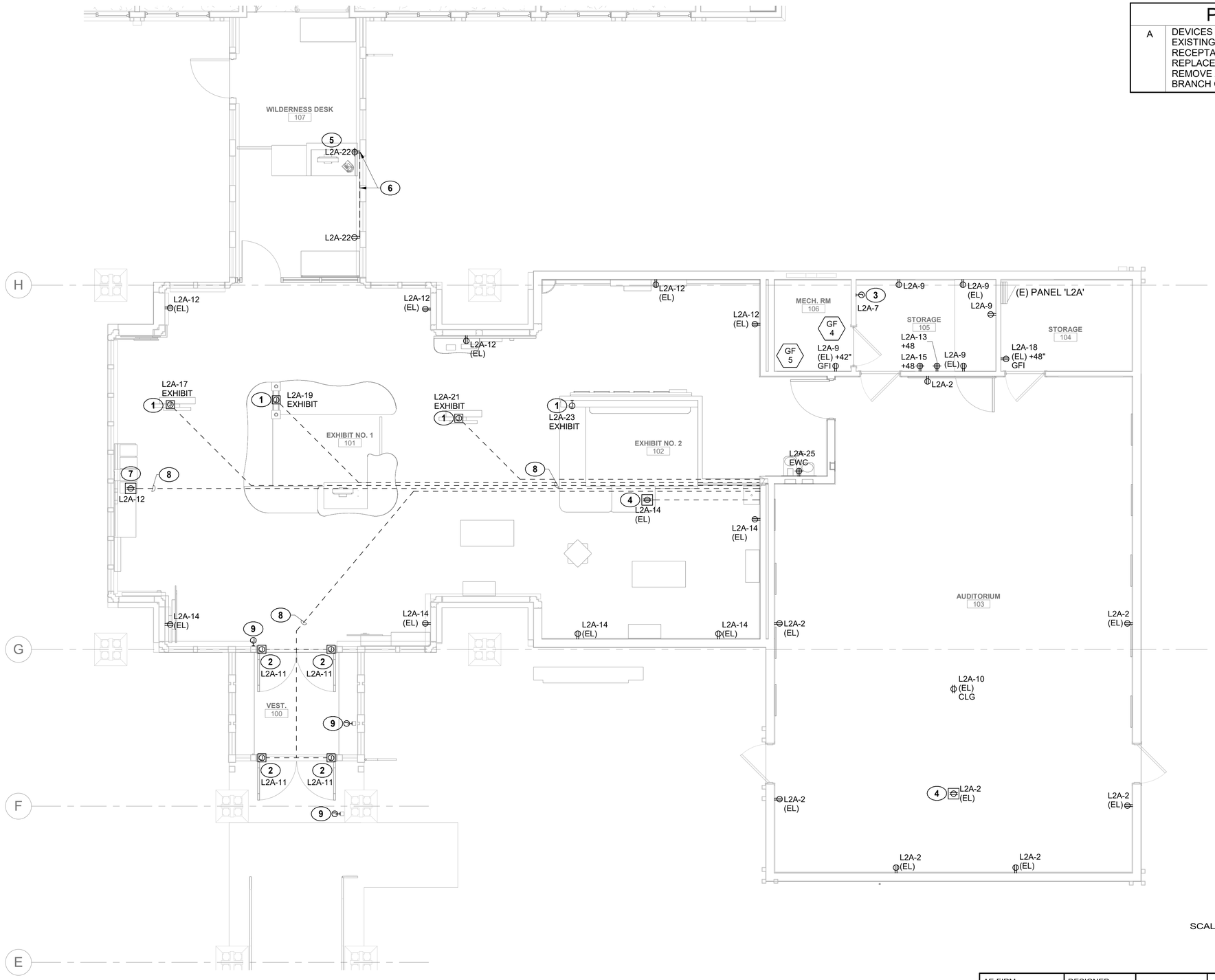

POWER GENERAL NOTES

A	DEVICES NOTED WITH (EL) ADJACENT TO THE DEVICE SHALL MAINTAIN EXISTING LOCATION IN ORDER TO LIMIT IMPACT TO MATERIALS. RECEPTACLE DEVICE AND FACEPLATE TO BE REMOVED AND REPLACED WITH NEW. BACKBOX AND CONDUIT SHALL BE REUSED. REMOVE ASSOCIATED WIRING BACK TO PANELBOARD OF ORIGIN. NEW BRANCH CIRCUIT FEEDERS SHALL BE PROVIDED AS SHOWN.

KEYNOTE LEGEND

KEY VALUE	KEYNOTE TEXT
1	EC SHALL PROVIDE FLOOR MOUNTED J-BOX FOR FUTURE EXHIBIT INSTALLATION POWER REQUIREMENTS. PROVIDE 3/4"C FOR POWER TO WALL AND UP TO ABOVE CEILING. COORDINATE FINAL LOCATION OF FLOORBOX WITH CONTRACTING OFFICER PRIOR TO ROUGH-IN.
2	JUNCTION BOX FOR 120V POWER CONNECTION TO MOTORIZED AUTOMATED ACCESS DOOR OPERATOR (PROVIDED BY OTHERS). EC SHALL MAKE ALL NECESSARY INTERCONNECTIONS BETWEEN JUNCTION BOX, OPERATOR MOTOR, AND PUSH PAD LOCATIONS PER MANUFACTURER'S REQUIREMENTS. COORDINATE EXACT LOCATIONS WITH APPROVED EQUIPMENT DRAWINGS. REFER TO ARCHITECTURAL SHEETS FOR LOCATION OF WIRELESS ACTUATOR PUSH PAD.
3	EC SHALL PROVIDE POWER CONNECTION FOR FIRE ALARM PANEL IN HALLWAY. COORDINATE EXACT LOCATION AND REQUIREMENTS WITH APPROVED FIRE ALARM SHOP DRAWINGS PRIOR TO ROUGH-IN.
4	EC SHALL MAINTAIN EXISTING FLOOR BOX AND PROVIDE NEW (1) 20A DUPLEX RECEPTACLE. PROVIDE COVER PLATE, DEVICE PLATES, AND ALL ACCESSORIES AS REQUIRED FOR A COMPLETE SYSTEM. REUSE EXISTING CONDUIT FROM BACKBOX TO PANEL 'L2A'.
5	NEW LOCATION FOR SALVAGED NOAA MONITOR. REFER TO KEYNOTE #2, SHEET ED102 AND KEYNOTE #3, SHEET T202 FOR MORE INFORMATION.
6	EC SHALL RUN CONDUIT FROM EXTERIOR, POKE THROUGH TO SURFACE MOUNTED LOCATION, AND RUN SURFACE MOUNTED CONDUIT ALONG THE BOTTOM WINDOW MULLION, CONCEALING THE CONDUIT AS MUCH AS POSSIBLE, TO DOWNSTREAM RECEPTACLE.
7	PROVIDE CONCRETE DUAL-SERVICE FLOOR BOX, SLAB ON GRADE, PROVISIONS FOR (1) DUPLEX AND (1) 4-DATA CONNECTIONS. PROVIDE 3/4" CONDUIT FOR POWER AND 1-1/2" CONDUIT FOR DATA TO WALL AND UP TO ABOVE CEILING. COORDINATE FINAL LOCATION OF FLOORBOX WITH CONTRACTING OFFICER PRIOR TO ROUGH-IN.
8	EC SHALL VERIFY SLAB DEPTH AND ROUTE CONDUIT BELOW EXISTING UNDERSLAB DUCTS PRIOR TO ROUGH-IN.
9	EC SHALL PROVIDE BACKBOX FOR WIRELESS DOOR OPENER. REFER TO ARCHITECTURAL SHEETS FOR MORE INFORMATION.

SCALE: B — 4 0 4 8 SCALE OF FEET

TRUE PLAN

1 / E102 ENLARGED POWER PLAN - AUDITORIUM & EXHIBIT
SCALE B

COLORADO REGISTERED PROFESSIONAL ENGINEER 35717 01/08/2026

AE FIRM PRIME: OTAK, INC. REDMOND, WA SUBCONTRACTOR: AE DESIGN DENVER, CO	DESIGNED: AE DESIGN CADD TW/RS/BJLV TECH REVIEW: JM/JEB/MS DATE: 01/16/2026	SUB SHEET NO. E102	TITLE OF SHEET ELEC ENLARGED POWER PLAN - AUDITORIUM/EXHIBIT REHABILITATE KAWUNEECHE VISITOR CENTER ROCKY MOUNTAIN NATIONAL PARK

DRAWING NO. 121 / 165639
PMIS/PKG NO. 326235
SHEET 126 OF 177

POWER GENERAL NOTES

A	DEVICES NOTED WITH (EL) ADJACENT TO THE DEVICE SHALL MAINTAIN EXISTING LOCATION IN ORDER TO LIMIT IMPACT TO MATERIALS. RECEPTACLE DEVICE AND FACEPLATE TO BE REMOVED AND REPLACED WITH NEW. BACKBOX AND CONDUIT SHALL BE REUSED. REMOVE ASSOCIATED WIRING BACK TO PANELBOARD OF ORIGIN. NEW BRANCH CIRCUIT FEEDERS SHALL BE PROVIDED AS SHOWN.

KEYNOTE LEGEND

KEY VALUE	KEYNOTE TEXT
1	WALL MOUNTED JUNCTION BOX FOR 120V, 20A HARDWIRED POWER CONNECTION TO HAND DRYER. EC SHALL CONFIRM EXACT FINAL LOCATION AND MOUNTING HEIGHT PRIOR TO ROUGH-IN.
2	EC SHALL MOUNT WATER FOUNTAIN RECEPTACLE BEHIND SHROUD OF DRINKING FOUNTAIN.

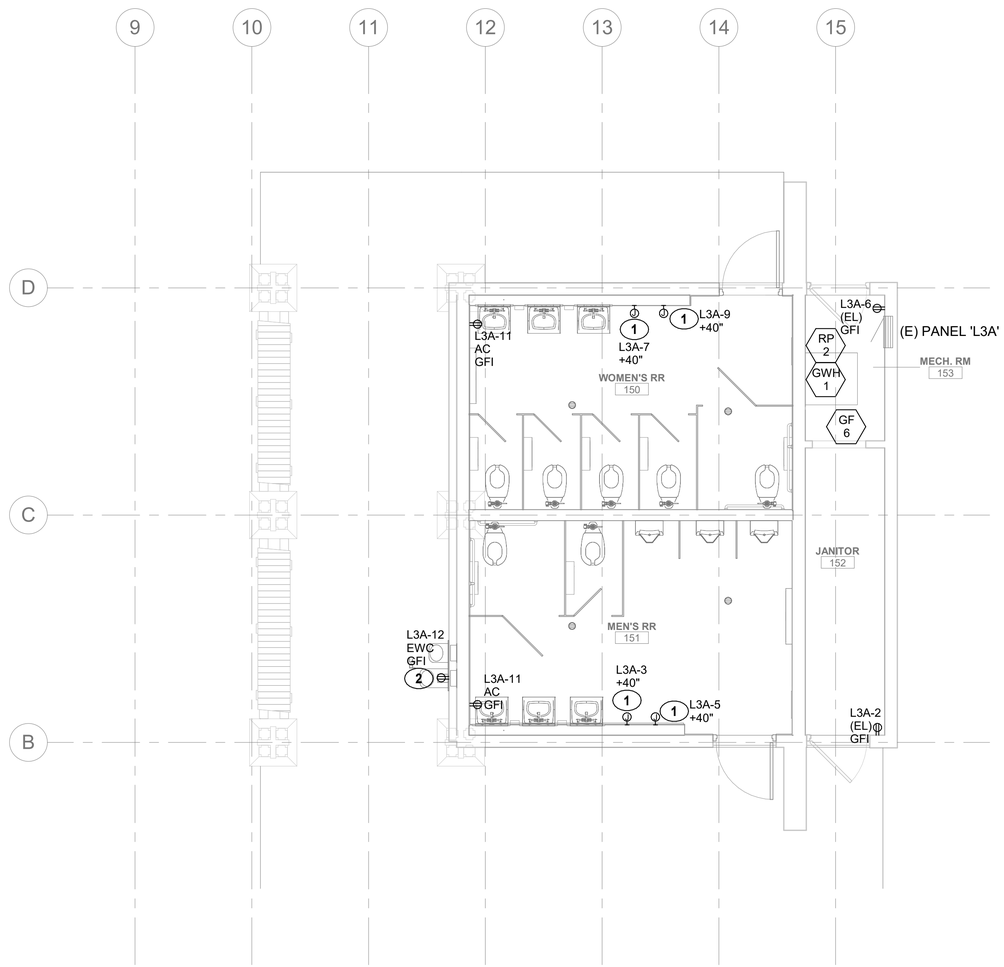

1 / E103 ENLARGED POWER PLAN - COMFORT STATION
SCALE (B)

SCALE: (B) 4 0 4 8 SCALE OF FEET

TRUE PLAN

COLORADO REGISTERED PROFESSIONAL ENGINEER 35717 01/08/2026

AE FIRM	DESIGNED:	SUB SHEET NO.	TITLE OF SHEET	DRAWING NO.
PRIME: OTAK, INC. REDMOND, WA	AE DESIGN	E103	ELEC ENLARGED POWER PLAN - COMFORT STATION	121 / 165639
	CADD TW/RS/BJLV		REHABILITATE KAWUNEECHE VISITOR CENTER ROCKY MOUNTAIN NATIONAL PARK	PMIS/PKG NO. 326235
SUBCONTRACTOR: AE DESIGN DENVER, CO	TECH REVIEW: JM/JEB/MS			SHEET 127 OF 177
	DATE: 01/16/2026			

1/8/2026 2:58:28 PM Autodesk Docs://2024-260 NPS ROMO Kawuneeche VC DD-CA wOtak/NPS ROMO KAWUEECHE VISITOR CENTER - ELECTRICAL.rvt

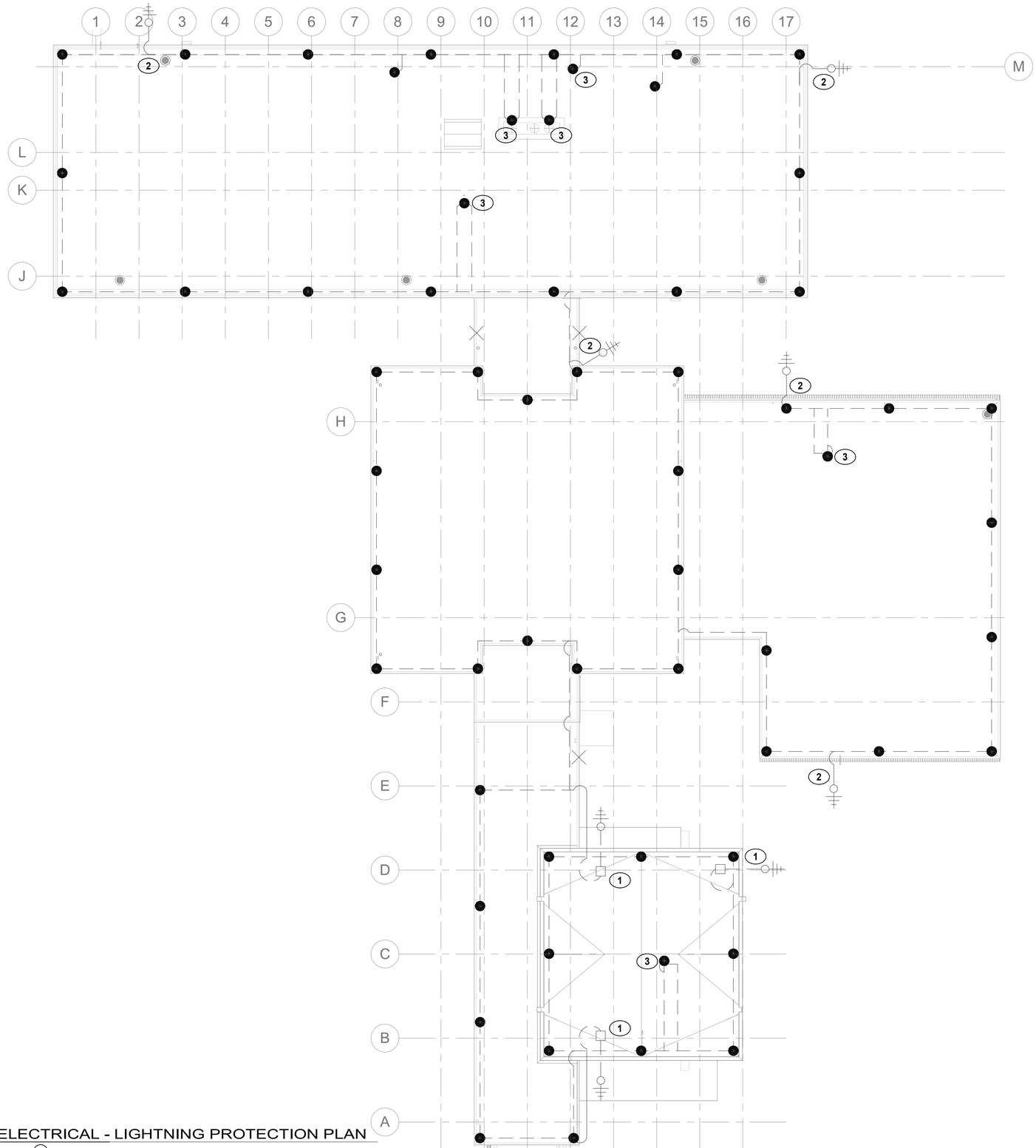

1 E104 ELECTRICAL - LIGHTNING PROTECTION PLAN
SCALE A

GENERAL NOTES

A	VERIFY ALL AIR TERMINAL, DOWNLEAD, AND GROUND ROD LOCATIONS WITH APPROVED SHOP DRAWINGS AND EXISTING FIELD CONDITIONS PRIOR TO INSTALLATION.
B	ALL CONDUCTIVE SERVICES (ELECTRICAL, COMMUNICATIONS, ETC.) AND BURIED METALLIC PIPING (WATER, GAS, FIRE, SANITARY, STORM, ETC.) WHICH ENTERS THE PROTECTED BUILDING SHALL BE BONDED TO THE LIGHTNING PROTECTION SYSTEM WITHIN 12 FT (3.6M) OF GRADE, PER NFPA 780 4.13. GAS TO BE BONDED ON CUSTOMER SIDE OF METER.
C	THE LIGHTNING PROTECTION SYSTEM REQUIRES A SURGE PROTECTION DEVICE TO BE INSTALLED ON EACH POWER SERVICE ENTRANCE. THESE SURGE PROTECTION DEVICES MUST BE A TYPE 1 OR TYPE 2 SURGE PROTECTION DEVICE THAT IS LISTED TO COMPLY WITH UL 1449, 4TH EDITION AND HAVE A NOMINAL DISCHARGE CURRENT OF 20KA PER PHASE, PER NFPA 780 4.18.
D	SURGE PROTECTION DEVICES SHALL BE PROVIDED FOR ALL COMMUNICATION SYSTEMS, INCLUDING BUT NOT LIMITED TO CATV, ALARM, DATA, AND ANTENNA SYSTEMS AT FACILITY ENTRANCES, PER NFPA 780 4.18.

KEYNOTE LEGEND

KEY VALUE	KEYNOTE TEXT
1	DOWNLEAD CONDUCTOR SHALL BE ROUTED WITHIN WALL. REFER TO DETAIL #6/E405 FOR ROUTING REQUIREMENTS. VERIFY EXACT REQUIREMENTS WITH APPROVED SHOP DRAWINGS PRIOR TO ROUGH-IN.
2	DOWNLEAD CONDUCTOR SHALL BE ROUTED WITHIN PVC CONDUIT ON THE EXTERIOR OF THE BUILDING. CONDUIT SHALL BE PAINTED TO MATCH THE BUILDING. CONDUIT AND DOWNLEAD SHALL BE CONCEALED TO THE GREATEST EXTENT POSSIBLE. REFER TO DETAIL #5/E405 FOR ROUTING REQUIREMENTS. VERIFY EXACT ROUTING IN FIELD WITH CONTRACTING OFFICER PRIOR TO ROUGH-IN. VERIFY EXACT REQUIREMENTS WITH APPROVED SHOP DRAWINGS PRIOR TO ROUGH-IN.
3	FLUE MOUNTED AIR TERMINAL, REFER TO DETAIL #4/E405 FOR ADDITIONAL INFORMATION.

SCALE: A 8 0 8 16 SCALE OF FEET TRUE PLAN

COLORADO REGISTERED PROFESSIONAL ENGINEER 35717 01/08/2026

AE FIRM	DESIGNED:	SUB SHEET NO.	TITLE OF SHEET	DRAWING NO.
PRIME: OTAK, INC. REDMOND, WA	AE DESIGN	E104	ELEC LIGHTNING PROTECTION PLAN	121 165639
SUBCONTRACTOR: AE DESIGN DENVER, CO	CADD TW/RS/BJLV		REHABILITATE KAWUNEECHE VISITOR CENTER ROCKY MOUNTAIN NATIONAL PARK	PMIS/PKG NO. 326235
	TECH REVIEW: JM/JEB/MS			SHEET 128 OF 177
	DATE: 01/16/2026			

1/8/2026 2:58:29 PM Autodesk Docs://2024-260 NPS ROMO Kawuneeche VC DD-CA wOtak/NPS ROMO KAWUEECHE VISITOR CENTER - ELECTRICAL.rvt

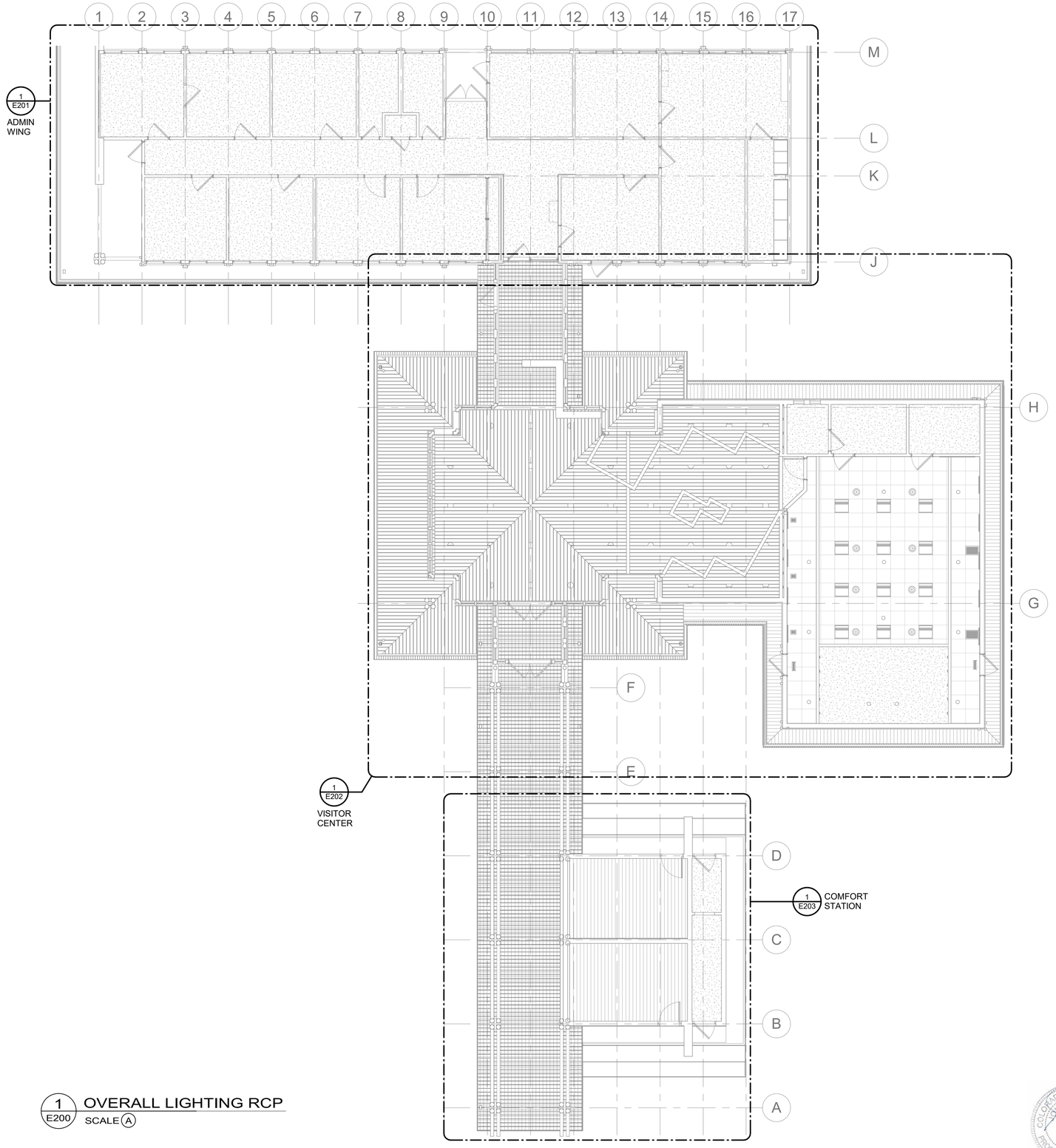

1 E200 OVERALL LIGHTING RCP
SCALE A

SCALE: A 8 0 8 16
SCALE OF FEET
TRUE PLAN

COLORADO REGISTERED PROFESSIONAL ENGINEER 35717 01/08/2026

AE FIRM	DESIGNED:	SUB SHEET NO.	TITLE OF SHEET	DRAWING NO.
PRIME: OTAK, INC. REDMOND, WA	AE DESIGN	E200	ELECTRICAL OVERALL LIGHTING RCP	121 165639
SUBCONTRACTOR: AE DESIGN DENVER, CO	CADD TW/RS/BJLV		REHABILITATE KAWUNEECHE VISITOR CENTER ROCKY MOUNTAIN NATIONAL PARK	PMIS/PKG NO. 326235
	TECH REVIEW: JM/JEB/MS			SHEET 129 OF 177
	DATE: 01/16/2026			

1/8/2026 2:58:30 PM Autodesk Docs://2024-260 NPS ROMO Kawuneeche VC DD-CA wOtak/NPS ROMO KAWUEECHE VISITOR CENTER - ELECTRICAL.rvt

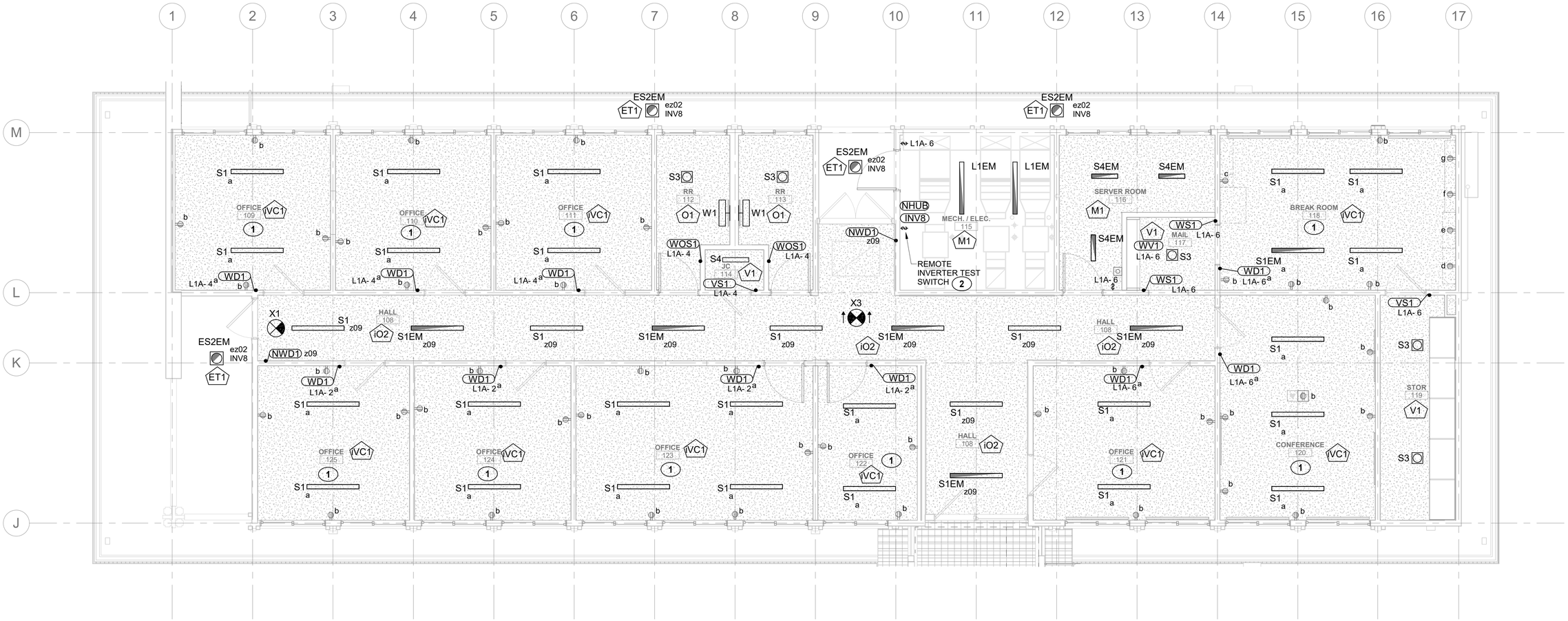

1 E201 LIGHTING RCP - ADMIN WING

SCALE B

LIGHTING GENERAL NOTES

A	ALL FIXTURES WITH HATCHING AND/OR DESIGNATED AS 'EM' SHALL BE PROVIDED WITH INTEGRAL BATTERY BACKUP OR REMOTE EMERGENCY INVERTER. BATTERY AND/OR INVERTER SHALL ENGAGE ONLY AFTER COMPLETE LOSS OF POWER TO THE CIRCUIT. REFER TO FIXTURE SCHEDULE ON SHEET E402 FOR FIXTURES WITH INTEGRAL EMERGENCY BATTERY OR REMOTE EMERGENCY INVERTER.
B	CIRCUIT ALL EXIT SIGNS TO NEAREST LINE VOLTAGE CIRCUIT, AHEAD OF ALL SWITCH LEGS.

KEYNOTE LEGEND

KEY VALUE	KEYNOTE TEXT
1	THIS ROOM CONTAINS WIRELESS LIGHTING AND RECEPTACLE CONTROL AND SHALL BE CONNECTED TO THE NETWORKED LIGHTING CONTROL SYSTEM. EACH LETTER DESIGNATED TO A LIGHT FIXTURE IN THIS ROOM INDICATES A NEW ZONE CONNECTED TO THE LIGHTING CONTROL SYSTEM. EACH RECEPTACLE IN THIS ROOM SHALL BE IT'S OWN DESIGNATED HALF HOT, HALF CONTROLLED RECEPTACLE. WIRELESS LIGHTING AND RECEPTACLE CONTROLS ARE USED IN THIS ROOM TO MINIMIZE SURFACE MOUNTED ROOM CONTROLLER EQUIPMENT. CONTROLLED RECEPTACLES IN THIS ROOM SHALL BE CONTROLLED FROM IN FIXTURE SENSOR. SEE SEQUENCE OF OPERATIONS SCHEDULE AND #2/E400 FOR MORE INFORMATION.
2	CONTRACTOR SHALL LOCATE REMOTE TEST SWITCH IN ACCESSIBLE LOCATION NEAR INVERTER.

SCALE: B

4 0 4 8
SCALE OF FEET

TRUE PLAN

COLORADO REGISTERED PROFESSIONAL ENGINEER 35717 01/08/2026

AE FIRM PRIME: OTAK, INC. REDMOND, WA SUBCONTRACTOR: AE DESIGN DENVER, CO	DESIGNED: AE DESIGN CADD TW/RS/BJLV TECH REVIEW: JM/JEB/MS DATE: 01/16/2026	SUB SHEET NO. E201	TITLE OF SHEET ELEC ENLARGED LIGHTING RCP - ADMIN WING REHABILITATE KAWUNEECHE VISITOR CENTER ROCKY MOUNTAIN NATIONAL PARK

DRAWING NO. 121 / 165639

PMIS/PKG NO. 326235

SHEET 130 OF 177

1/8/2026 2:58:31 PM Autodesk Docs://2024-260 NPS ROMO Kawuneeche VC DD-CA wOtak/NPS ROMO KAWUEECHE VISITOR CENTER - ELECTRICAL.rvt

Autodesk Docs://2024-260 NPS ROMO Kawuneeche VC DD-CA wOtak/NPS ROMO KAWUEECHE VISITOR CENTER - ELECTRICAL.rvt

1/8/2026 2:58:32 PM

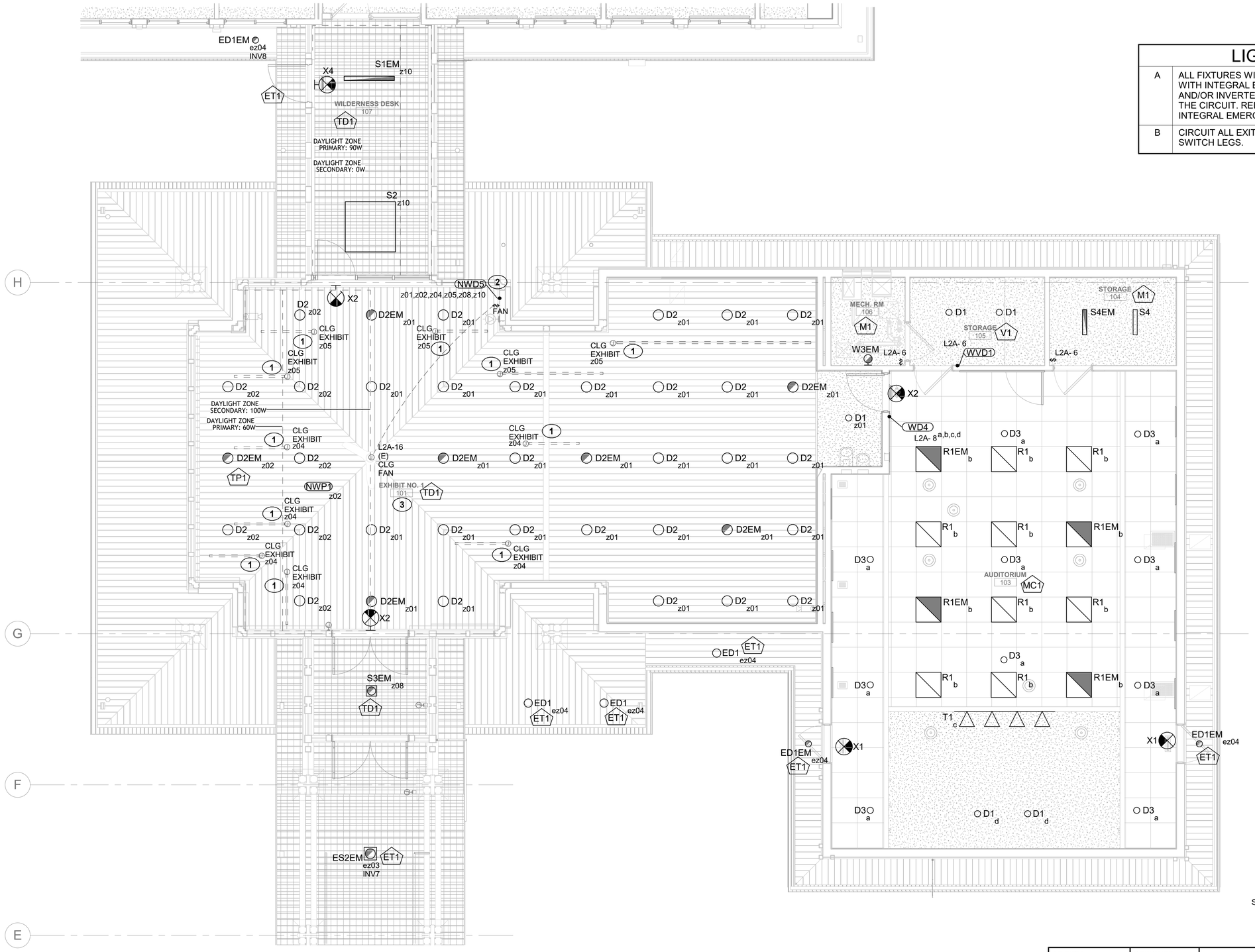

LIGHTING GENERAL NOTES

A	ALL FIXTURES WITH HATCHING AND/OR DESIGNATED AS 'EM' SHALL BE PROVIDED WITH INTEGRAL BATTERY BACKUP OR REMOTE EMERGENCY INVERTER. BATTERY AND/OR INVERTER SHALL ENGAGE ONLY AFTER COMPLETE LOSS OF POWER TO THE CIRCUIT. REFER TO FIXTURE SCHEDULE ON SHEET E402 FOR FIXTURES WITH INTEGRAL EMERGENCY BATTERY OR REMOTE EMERGENCY INVERTER.
B	CIRCUIT ALL EXIT SIGNS TO NEAREST LINE VOLTAGE CIRCUIT, AHEAD OF ALL SWITCH LEGS.

KEYNOTE LEGEND

KEY VALUE	KEYNOTE TEXT
1	EC SHALL LOCATE ALL JUNCTION BOXES FOR FUTURE TRACK LIGHTING ABOVE CEILING WITH MC CABLE SNAKED THROUGH PLYWOOD AND WOOD SLAT CEILING. COORDINATE EXACT LOCATIONS WITH EXHIBIT DESIGN PRIOR TO INSTALLATION. REFER TO DETAIL #5/E404 FOR DESIGN INTENT. CONTROL DEVICE SHALL BE LOCATED NEAR ACCESSIBLE DOWNLIGHT IN EXHIBIT AREA. TRACK LIGHTING SHALL BE FURNISHED, INSTALLED, AND CONNECTED AT MC CABLE BY EXHIBIT CONTRACTOR, CONCURRENT TO NEW EXHIBIT SCOPE OF WORK.
2	CONTRACTOR SHALL PROVIDE LOCKABLE WALL BOX COVER FOR NEW LIGHT SWITCHES AFTER EXISTING SWITCHES ARE REMOVED AND WALL IS PATCHED. REFER TO SPECIFICATION 26 27 26 - WIRING DEVICES FOR SALIENT CHARACTERISTICS.
3	CONTRACTOR SHALL REMOVE ALL EXISTING LIGHTING IN THIS SPACE AND INSTALL NEW RETROFIT DOWNLIGHT PER DETAIL #4/E404. SEQUENCING IS CRITICAL TO PROTECT HISTORIC MATERIALS.

SCALE: B 4 0 4 8 SCALE OF FEET

TRUE PLAN

1 / E202 LIGHTING RCP - AUDITORIUM & EXHIBIT
SCALE B

COLORADO REGISTERED PROFESSIONAL ENGINEER 35717 01/08/2026

AE FIRM PRIME: OTAK, INC. REDMOND, WA SUBCONTRACTOR: AE DESIGN DENVER, CO	DESIGNED: AE DESIGN CADD TW/RS/BJLV TECH REVIEW: JM/JEB/MS DATE: 01/16/2026	SUB SHEET NO. E202	TITLE OF SHEET ELEC ENLARGED LIGHTING RCP - AUDITORIUM/EXHIBIT REHABILITATE KAWUNEECHE VISITOR CENTER ROCKY MOUNTAIN NATIONAL PARK

DRAWING NO. 121 165639
PMIS/PKG NO. 326235
SHEET 131 OF 177

Autodesk Docs://2024-260 NPS ROMO Kawuneeche VC DD-CA wOtak/NPS ROMO KAWUEECHE VISITOR CENTER - ELECTRICAL.rvt
1/8/2026 2:58:33 PM

LIGHTING GENERAL NOTES

A	ALL FIXTURES WITH HATCHING AND/OR DESIGNATED AS 'EM' SHALL BE PROVIDED WITH INTEGRAL BATTERY BACKUP OR REMOTE EMERGENCY INVERTER. BATTERY AND/OR INVERTER SHALL ENGAGE ONLY AFTER COMPLETE LOSS OF POWER TO THE CIRCUIT. REFER TO FIXTURE SCHEDULE ON SHEET E402 FOR FIXTURES WITH INTEGRAL EMERGENCY BATTERY OR REMOTE EMERGENCY INVERTER.

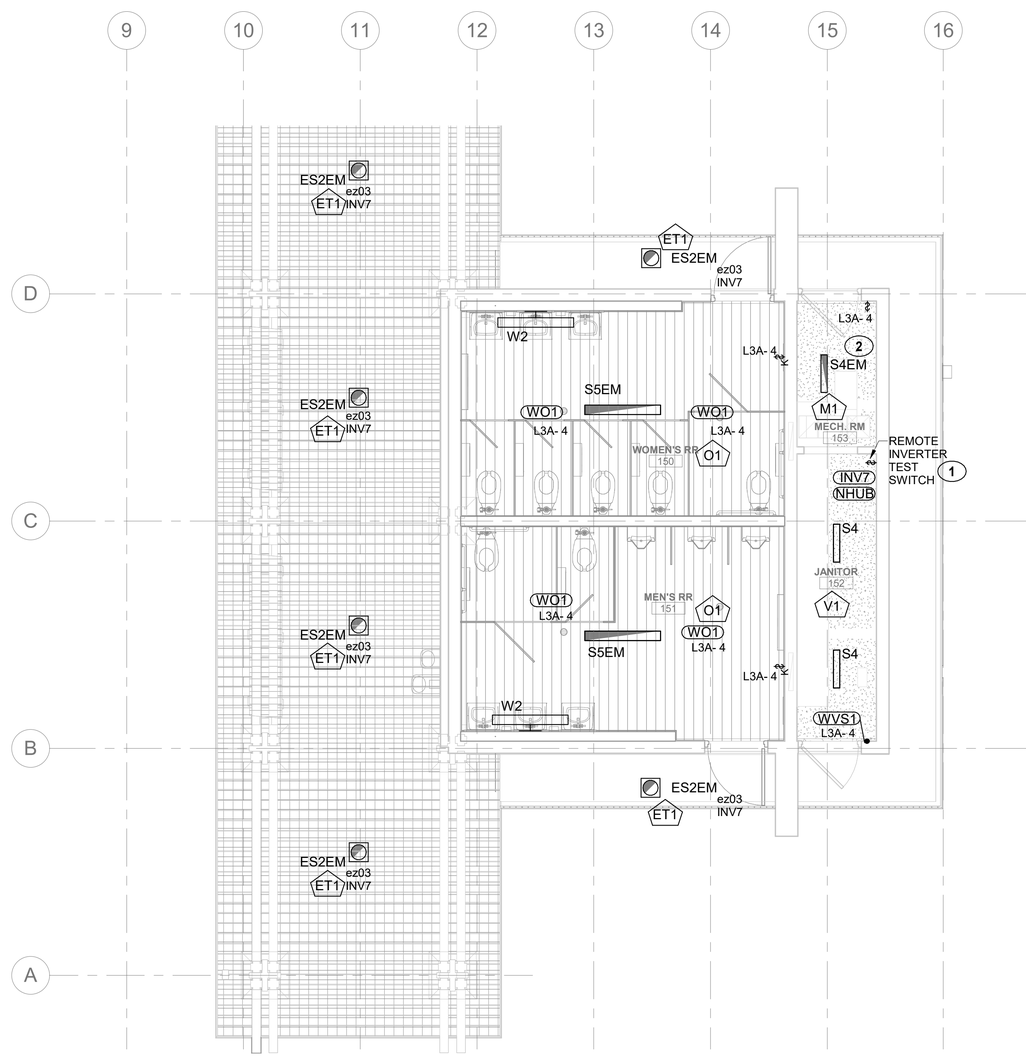

1 E203 LIGHTING RCP - COMFORT STATION
SCALE B

SCALE: B 4 0 4 8 SCALE OF FEET

TRUE PLAN

COLORADO REGISTERED PROFESSIONAL ENGINEER 35717 01/08/2026

AE FIRM PRIME: OTAK, INC. REDMOND, WA SUBCONTRACTOR: AE DESIGN DENVER, CO	DESIGNED: AE DESIGN CADD TW/RS/BJLV TECH REVIEW: JM/JEB/MS DATE: 01/16/2026	SUB SHEET NO. E203	TITLE OF SHEET ELEC ENLARGED LIGHTING RCP - COMFORT STATION REHABILITATE KAWUNEECHE VISITOR CENTER ROCKY MOUNTAIN NATIONAL PARK

DRAWING NO. 121 165639
PMIS/PKG NO. 326235
SHEET 132 OF 177

FAULT CURRENT CALCULATION SCHEDULE

POINT	LOCATION DESCRIPTION	LENGTH (L) (ft)	VOLTAGE (EL-L)	VOLTAGE (EL-N)	PHASE	WIRE SIZE	CONDUCTOR MATERIAL	CONDUCTOR TYPE	CONDUIT MATERIAL	VOLTAGE CLASS	C VALUE	# OF PARALLEL RUNS	Isc AVAILABLE UPSTREAM	Isc AT EQUIP (I3ph) OR (IL-L)	POINT
F0	UTILITY XFMR												--	11,000	F0
F1	UTILITY METER	40	240	120	1	3X	COPPER	THREE SINGLE CONDUCTORS	NONMAGNETIC	600V	13923	2	11,000	9,720	F1
F2	'MDS	10	240	120	1	3X	COPPER	THREE SINGLE CONDUCTORS	STEEL	600V	13923	2	9,720	9,445	F2
F3	WIREWAY	120	240	120	1	3X	COPPER	THREE SINGLE CONDUCTORS	NONMAGNETIC	600V	13923	2	9,445	7,053	F3
F4	'L1A' DISCONNECT	5	240	120	1	3X	COPPER	THREE SINGLE CONDUCTORS	STEEL	600V	12843	1	7,053	6,895	F4
F5	PANEL 'L1A'	50	240	120	1	3X	COPPER	THREE SINGLE CONDUCTORS	STEEL	600V	12843	1	6,895	5,635	F5
F6	PANEL 'L3A'	130	240	120	1	1	COPPER	THREE SINGLE CONDUCTORS	STEEL	600V	7292	1	5,635	3,067	F6
F7	'L2A' DISCONNECT	5	240	120	1	3X	COPPER	THREE SINGLE CONDUCTORS	STEEL	600V	12843	1	7,053	6,895	F7
F8	PANEL 'L2A'	75	240	120	1	3X	COPPER	THREE SINGLE CONDUCTORS	NONMAGNETIC	600V	13923	1	6,895	5,265	F8

NOTES:

1. ALL CALCULATIONS WERE DONE USING BUSSMAN "POINT-TO-POINT" METHOD.
2. REFER TO PLANS FOR UTILITY TRANSFORMER SIZE UTILIZED FOR CALCULATIONS.
3. CONDUCTOR LENGTHS INDICATED IN THIS SCHEDULE ARE FOR THE PURPOSES OF FAULT CURRENT CALCULATIONS ONLY. THESE LENGTHS ASSUME WORST CASE SHORTEST DISTANCE CONDITIONS AND SHOULD NOT BE UTILIZED BY THE ELECTRICAL CONTRACTOR FOR SOLICITATION PURPOSES. THE ELECTRICAL CONTRACTOR SHALL BE RESPONSIBLE FOR ESTIMATING AND MEASURING ACTUAL FIELD CONDITION LENGTHS AS PART OF THE SOLICITATION PROCESS.

KEYNOTE LEGEND

KEY VALUE	KEYNOTE TEXT
1.	CONTRACTOR SHALL PROVIDE E-MON D-MON GREEN CLASS, OR EQUAL, DEMAND METER FOR FEEDER INDICATED. REFER TO SPECIFICATION 26 27 13 - ELECTRICITY METERING FOR SALIENT CHARACTERISTICS.
2.	PANEL L1A SHALL BE REPLACED IN PLACE IN KIND WITH A NEW 200A 240V 1 PHASE 42 SPACE PANELBOARD. MAINTAIN EXISTING CONNECTIONS IN MANNER TO FACILITATE RECONNECTION TO NEW PANEL L1A.
3.	EC SHALL PROVIDE 100KA EXTERNAL SURGE PROTECTION DEVICE. REFER TO SPECIFICATION 26 43 13 - TRANSIENT -VOLTAGE SUPPRESSION FOR LOW-VOLTAGE ELECTRICAL POWER CIRCUITS FOR SALIENT CHARACTERISTICS.

GENERAL GROUNDING NOTES

A. ALL CABLES TO BE TERMINATED ONTO BUS BAR WITH TWO HOLE COMPRESSION LUGS AND ATTACHED TO BUS BAR WITH TAB COMPRESSION BELLEVILLE WASHERS AND TORK BOLT ASSEMBLY.

B. ALL GROUND CONNECTORS SHALL BE STRANDED.

C. ALL BUS BARS SHALL BE ATTACHED TO SURFACE WITH NON-CONDUCTIVE STAND-OFFS.

D. GROUND BUS BAR AND GROUNDING SYSTEM SHALL BE U.L. LISTED AND COMPLY WITH MANUFACTURERS INSTALLATION INSTRUCTIONS.

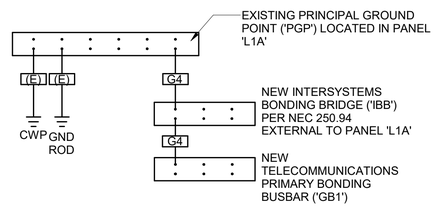

2 E300 GROUNDING DETAIL & NOTES

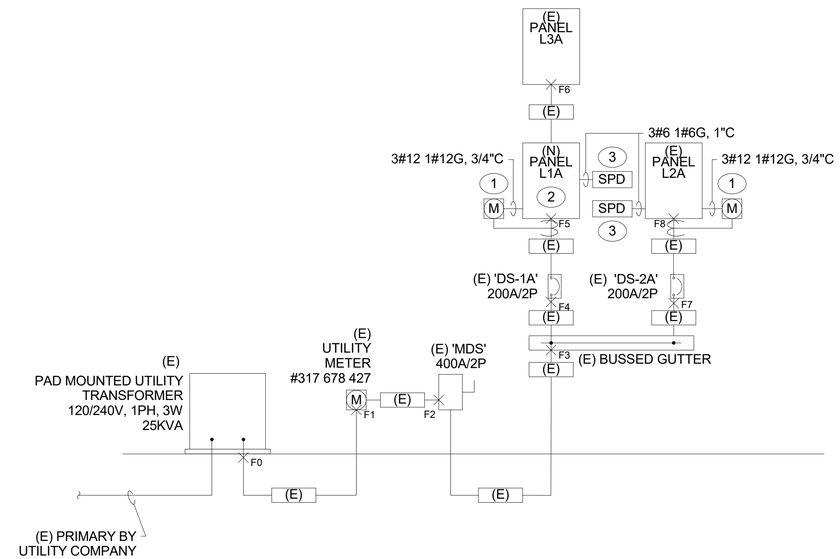

1 E300 ONE-LINE DIAGRAM

COLORADO REGISTERED PROFESSIONAL ENGINEER 35717 01/08/2026

AE FIRM	DESIGNED:	SUB SHEET NO.	TITLE OF SHEET	DRAWING NO.
PRIME: OTAK, INC. REDMOND, WA SUBCONTRACTOR: AE DESIGN DENVER, CO	AE DESIGN CADD TW/RS/BJLV TECH REVIEW: JM/JEB/MS DATE: 01/16/2026	E300	ELECTRICAL ONE-LINE DIAGRAM REHABILITATE KAWUNEECHE VISITOR CENTER ROCKY MOUNTAIN NATIONAL PARK	121 165639 PMIS/PKG NO. 326235 SHEET 133 OF 177

1/8/2026 2:58:33 PM Autodesk Docs://2024-260 NPS ROMO Kawuneeche VC DD-CA wOtak/NPS ROMO KAWUEECHE VISITOR CENTER - ELECTRICAL.rvt

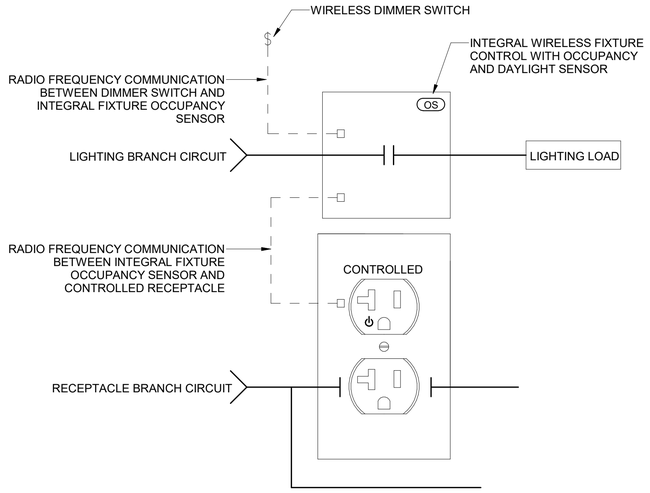

LEGEND

- - - - RADIO FREQUENCY COMMUNICATION. TERMINATIONS AND SPECIFICATIONS PER MANUFACTURER.

——— LINE VOLTAGE

REFER TO LIGHTING CONTROL NOTES FOR INFORMATION ON HEAD-END/HUB REQUIRED SPARE CAPACITY.

2 E400 WIRELESS RISER DIAGRAM - RECEPTS + LIGHTS

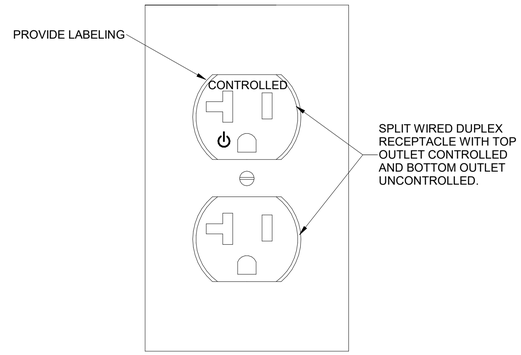

1 E400 CONTROLLED RECEPTACLE

MECHANICAL EQUIPMENT SCHEDULE

KEY		EQUIPMENT DESCRIPTION	LOAD	ELECTRICAL	MOCP/ MFS	FEEDER	DISCONNECT	PANEL	CIRCUIT	NOTES
AC	1	SPLIT SYSTEM INDOOR UNIT	NOTE 1	240 V/1-120 VA	--	3#12, 1#12G, 3/4"C	30A/2P	L1A	29,31	1
CU	1	SPLIT SYSTEM OUTDOOR UNIT	19 MCA	240 V/1-4560 VA	30A	3#10, 1#10G, 3/4"C	30A/2P	L1A	29,31	1
EF	1	EXHAUST FAN	0.18 FLA	120 V/1-22 VA	15A	2#12, 1#12G, 3/4"C	WALL SWITCH	L1A	22	
EF	2	EXHAUST FAN	0.18 FLA	120 V/1-22 VA	15A	2#12, 1#12G, 3/4"C	WALL SWITCH	L1A	22	
EUH	1	ELECTRIC UNIT HEATER	20 MCA	240 V/1-4800 VA	30A	2#10, 1#10G, 3/4"C	INTEGRAL	L1A	21,23	
EWH	1	ELECTRIC WATER HEATER	2.5 KW	240 V/1-2500 VA	20A	2#12, 1#12G, 3/4"C	30A/2P	L1A	28,30	
EWH	2	ELECTRIC WATER HEATER	2.5 KW	240 V/1-2500 VA	20A	2#12, 1#12G, 3/4"C	30A/2P	L1A	33,35	
GF	1	GAS FURNACE	14.1 MCA	120 V/1-1692 VA	15A	2#12, 1#12G, 3/4"C	30A/1P	L1A	16	
GF	2	GAS FURNACE	14.1 MCA	120 V/1-1692 VA	15A	2#12, 1#12G, 3/4"C	30A/1P	L1A	20	
GF	3	GAS FURNACE	14.1 MCA	120 V/1-1692 VA	15A	2#12, 1#12G, 3/4"C	30A/1P	L1A	24	
GF	4	GAS FURNACE	14.1 MCA	120 V/1-1692 VA	15A	2#12, 1#12G, 3/4"C	30A/1P	L2A	1	
GF	5	GAS FURNACE	10.3 MCA	120 V/1-1236 VA	15A	2#12, 1#12G, 3/4"C	30A/1P	L2A	3	
GF	6	GAS FURNACE	13.3 MCA	120 V/1-1596 VA	15A	2#12, 1#12G, 3/4"C	30A/1P	L3A	10	
GWH	1	GAS WATER HEATER	5 MCA	120 V/1-600 VA	15A	2#12, 1#12G, 3/4"C	30A/1P	L3A	8	
RP	1	RECIRCULATION PUMP	70 W	120 V/1-70 VA	15A	2#12, 1#12G, 3/4"C	INTEGRAL	L1A	22	
RP	2	RECIRCULATION PUMP	70 W	120 V/1-70 VA	15A	2#12, 1#12G, 3/4"C	INTEGRAL	L3A	8	

MECHANICAL EQUIPMENT GENERAL NOTES

A	REFER TO MECHANICAL PLANS FOR SPECIFIC EQUIPMENT LOCATIONS AND REQUIREMENTS.
B	PRIOR TO ROUGH-IN, COORDINATE ALL MECHANICAL EQUIPMENT POWER AND CONNECTION REQUIREMENTS WITH MECHANICAL CONTRACTOR'S FINAL SHOP DRAWINGS.
C	PROVIDE ALL 120V CONTROL WIRING, REFER TO SPECIFICATIONS FOR FURTHER CONTROL WIRING CLARIFICATION.
D	EC TO PROVIDE HAND/OFF/AUTO STARTERS FOR ALL MOTORS WHEN NOT INDICATED AS TO BE PROVIDED BY THE MECHANICAL CONTRACTOR ON THE MECHANICAL PLANS. SIZE OF STARTER TO BE BASED UPON SIZE OF MOTOR HORSEPOWER INDICATED.

MECHANICAL EQUIPMENT SPECIFIC NOTES

1	INDOOR UNIT SHALL BE POWERED BY OUTDOOR UNIT. PROVIDE A NEUTRAL CONDUCTOR FOR 120V PUMP IN INDOOR UNIT.

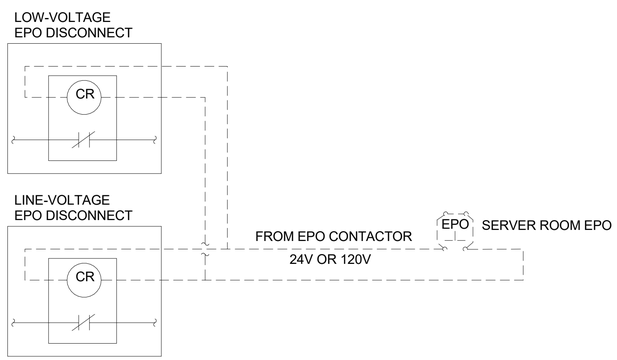

3 E400 EMERGENCY POWER OFF DETAIL
NO SCALE

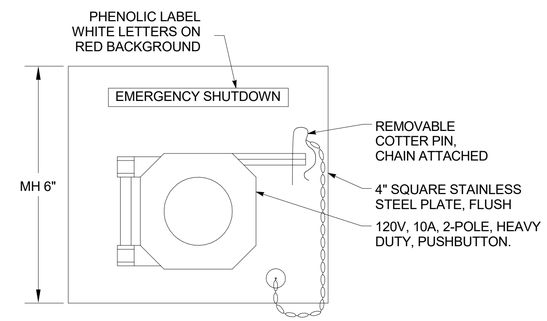

4 E400 EPO PUSH BUTTON DETAIL
NO SCALE

EPO SEQUENCE OF OPERATION

1. AN EMERGENCY POWER OFF (EPO) SYSTEM SHALL BE PROVIDED TO PROVIDE EMERGENCY DISCONNECTION OF POWER TO ALL SERVER RELATED DEVICES WITHIN SERVER ROOM 116.

GENERAL NOTES

1. EMERGENCY POWER OFF SHALL BE INSTALLED AND OPERATE PER LOCAL AUTHORITY HAVING JURISDICTION. COORDINATE EXACT REQUIREMENTS WITH CONTRACTING OFFICER PRIOR TO PREPARATION OF SUBMITTALS.
2. WIRING DIAGRAM SHOWN FOR GENERAL INTENT, ACTUAL WIRING CONFIGURATION INCLUDING RELAY CONTACT CONFIGURATION TO BE COORDINATED WITH MANUFACTURER SHOP DRAWINGS.
3. CONTRACTOR TO PROVIDE ALL CONTROL RELAYS, CONDUIT, WIRE, ACCESSORIES, TERMINATIONS AND TESTING AS REQUIRED TO MEET THE INTENT OF THE 'EPO' SHUTDOWN SEQUENCE.

EPO STATIONS

1. EPO STATIONS SHALL CONSIST OF THE FOLLOWING COMPONENTS:
   a. RED, PUSHBUTTON WITH NORMALLY OPEN CONTACTS. THE PUSHBUTTON SHALL LOCK IN THE DEPRESSED POSITION. THE PUSHBUTTON SHALL BE RELEASED IN ITS NORMAL STATE BY MEANS OF A KEY RELEASE MECHANISM.
   b. HINGED PUSHBUTTON COVER WITH SAFETY PIN AND HINGED LEXAN COVER GUARD TO PROTECT PUSHBUTTON STATION FROM INCIDENTAL CONTACT BY PERSONNEL OR EQUIPMENT.
2. EPO STATIONS SHALL BE LOCATED IN THE FIELD AS DIRECTED BY CONTRACTING OFFICER. ANTICIPATED LOCATIONS INDICATED ON PLANS.

COLORADO REGISTERED PROFESSIONAL ENGINEER 35717 01/08/2026

AE FIRM PRIME: OTAK, INC. REDMOND, WA SUBCONTRACTOR: AE DESIGN DENVER, CO	DESIGNED: AE DESIGN CADD TW/RS/BJLV TECH REVIEW: JM/JEB/MS DATE: 01/16/2026	SUB SHEET NO. E400	TITLE OF SHEET ELECTRICAL SCHEDULES REHABILITATE KAWUNEECHE VISITOR CENTER ROCKY MOUNTAIN NATIONAL PARK

DRAWING NO. 121 / 165639
PMIS/PKG NO. 326235
SHEET 134 OF 177

1/8/2026 2:58:33 PM Autodesk Docs://2024-260 NPS ROMO Kawuneeche VC DD-CA wOtak/NPS ROMO KAWUEECHE VISITOR CENTER - ELECTRICAL.rvt

1/8/2026 2:58:34 PM Autodesk Docs://2024-260 NPS ROMO Kawuneeche VC DD-CA wOtak/NPS ROMO KAWUEECHE VISITOR CENTER - ELECTRICAL.rvt

PANEL: L2A

LOCATION: STORAGE 104
SUPPLY FROM: ENCLOSED BREAKER 'DS-2A'
MOUNTING: SURFACE
ENCLOSURE: TYPE 1

VOLTS: 120/240 Single
PHASES: 1
WIRES: 3

A.I.C. RATING: 10K AIC
MAINS TYPE: MLO
MAINS RATING: 225 A
MCB RATING: N/A

Notes:

CKT	CCT TYPE	LOAD DESCRIPTION	TRIP	POLES	CB TYPE	A		B		CB TYPE	POLES	TRIP	LOAD DESCRIPTION	CCT TYPE	CKT
1	E	GF-4 (N2)	20	1		1692	1440				1	20	RCPT - AUDITORIUM (N2)	R	2
3	E	GF-5 (N2)	20	1				1236	3750		1	20	LTG - EXHIBIT (N2)	L	4
5	L	LTG - EXHIBIT (N2)	20	1		977	80				1	20	LTG - STORAGE/PROJECTION (N2)	L	6
7	E	FIRE ALARM PANEL (N2)	20	1				200	594		1	20	LTG - AUDITORIUM (N2)	L	8
9	R	RCPT - STORAGE, MECH (N2)	20	1		900	180				1	20	RCPT - PROJECTOR (N2)	R	10
11	M	AUTOMATED DOORS (N2)	20	1				400	1080		1	20	RCPT - EXHIBIT CONVENIENCE (N2)	R	12
13	R	RCPT - AV (N2)	20	1		360	1080				1	20	RCPT - EXHIBIT CONVENIENCE (N2)	R	14
15	R	RCPT - AV (N2)	20	1				360	200		1	20	CEILING FAN (N1)	M	16
17	E	EXHIBIT (N2)	20	1		500	180				1	20	RCPT - STORAGE (N2)	R	18
19	E	EXHIBIT (N2)	20	1				1000	0		1	20	SPARE (N2)	--	20
21	E	EXHIBIT (N2)	20	1		500	540				1	20	RCPT - WILDERNESS DESK (N2)	R	22
23	E	EXHIBIT (N2)	20	1				1000	3850		2	40	EV CHARGER (N3)	E	24
25	R	EWC (N3)	20	1	GFCI	500	3850				--	--	--	--	26
27	--	SPARE (N1)	20	1				0	0		1	20	SPARE (N1)	--	28
29	--	SPARE (N1)	20	1		0	0				1	20	SPARE (N1)	--	30
31	--	SPARE (N1)	20	1				0	0		1	20	SPARE (N1)	--	32
33	--	SPARE (N1)	20	1		0	0				1	20	SPARE (N1)	--	34
35	--	SPARE (N1)	20	1				0	0		1	20	SPARE (N1)	--	36
37	--	SPARE (N1)	20	1		0	0				1	20	SPARE (N1)	--	38
39	--	E-MON D-MON METER (N3)	20	2				0	0		2	30	SPD (N3)	--	40
41	--	--	--	--		0	0				--	--	--	--	42
					Total Load:	12779 VA		13655 VA							
					Total Amps:	106 A		114 A							

CB TYPE LEGEND
GFCI: 5mA GROUND FAULT CIRCUIT INTERRUPTER
GFEP: 30mA GROUND FAULT PROTECTION FOR EQUIPMENT
AFCI: ARC FAULT CIRCUIT INTERRUPTER
CAFCI: COMBINATION ARC FAULT & 5mA GROUND FAULT CIRCUIT INTERRUPTER
HC(-ON/OFF): HANDLE CLAMP FOR LOCKING IN...
HT#: HANDLE TIE WITH GROUPING #
ST: SHUNT TRIP
LOCK: PERMANENTLY LOCKABLE BREAKER

CIRCUIT PHASE CODE LEGEND
N1. EXISTING LOAD ON EXISTING CIRCUIT BREAKER.
N2. NEW LOAD ON EXISTING CIRCUIT BREAKER.
N3. NEW LOAD ON NEW CIRCUIT BREAKER. CIRCUIT BREAKER AND AIC RATING TO MATCH EXISTING.

CCT TYPE:	LOAD	DEMAND LOAD	PANEL TOTALS	
LIGHTING:	5387 VA	6733 VA		
RECEPTACLE:	6620 VA	6620 VA	**TOTAL CONN. LOAD:**	26433 VA
MOTOR:	600 VA	650 VA	**TOTAL EST. LOAD:**	27830 VA
EQUIPMENT:	13828 VA	13828 VA	**TOTAL CONN.:**	110 A
KITCH EQUIP:			**TOTAL EST. DEMAND:**	116 A

NOTES:

PANEL: L3A

LOCATION: MECH. RM 153
SUPPLY FROM: L1A
MOUNTING: RECESSED
ENCLOSURE: TYPE 1

VOLTS: 120/240 Single
PHASES: 1
WIRES: 3

A.I.C. RATING: 10K AIC
MAINS TYPE: MCB
MAINS RATING: 100 A
MCB RATING: 100 A

Notes:
EXISTING 20-POLE PANELBOARD

CKT	CCT TYPE	LOAD DESCRIPTION	TRIP	POLES	CB TYPE	A		B		CB TYPE	POLES	TRIP	LOAD DESCRIPTION	CCT TYPE	CKT
1	L	LTG - EXTERIOR (N2)	15	1		377	180				1	20	RCPT - STORAGE (N2)	R	2
3	E	MENS HAND DRYER (N2)	20	1				1000	214		1	20	LTG - COMFORT STATION (N2)	L	4
5	E	MENS HAND DRYER (N2)	20	1		1000	180				1	20	RCPT - MECH ROOM (N2)	R	6
7	E	WOMENS HAND DRYER (N2)	20	1				1000	670		1	20	GWH-1, RP-2 (N2)	E; M	8
9	E	WOMENS HAND DRYER (N2)	20	1		1000	1596				1	15	GF-6 (N3)	E	10
11	R	RCPT - RESTROOMS (N3)	20	1				360	500		1	20	EXTERIOR EWC (N3)	E	12
13	--	BUSSED SPACE	--	1		--	--				1	--	BUSSED SPACE	--	14
15	--	BUSSED SPACE	--	1				--	--		1	--	BUSSED SPACE	--	16
17	--	BUSSED SPACE	--	1		--	--				1	--	BUSSED SPACE	--	18
19	--	BUSSED SPACE	--	1				--	--		1	--	BUSSED SPACE	--	20
					Total Load:	4333 VA		3744 VA							
					Total Amps:	36 A		31 A							

CB TYPE LEGEND
GFCI: 5mA GROUND FAULT CIRCUIT INTERRUPTER
GFEP: 30mA GROUND FAULT PROTECTION FOR EQUIPMENT
AFCI: ARC FAULT CIRCUIT INTERRUPTER
CAFCI: COMBINATION ARC FAULT & 5mA GROUND FAULT CIRCUIT INTERRUPTER
HC(-ON/OFF): HANDLE CLAMP FOR LOCKING IN...
HT#: HANDLE TIE WITH GROUPING #
ST: SHUNT TRIP
LOCK: PERMANENTLY LOCKABLE BREAKER

CIRCUIT PHASE CODE LEGEND
N1. EXISTING LOAD ON EXISTING CIRCUIT BREAKER.
N2. NEW LOAD ON EXISTING CIRCUIT BREAKER.
N3. NEW LOAD ON NEW CIRCUIT BREAKER. CIRCUIT BREAKER AND AIC RATING TO MATCH EXISTING.

CCT TYPE:	LOAD	DEMAND LOAD	PANEL TOTALS	
LIGHTING:	591 VA	739 VA		
RECEPTACLE:	720 VA	720 VA	**TOTAL CONN. LOAD:**	8077 VA
MOTOR:	70 VA	88 VA	**TOTAL EST. LOAD:**	8242 VA
EQUIPMENT:	6696 VA	6696 VA	**TOTAL CONN.:**	34 A
KITCH EQUIP:			**TOTAL EST. DEMAND:**	34 A

NOTES:

PANEL: L1A

LOCATION: MECH. / ELEC. 115
SUPPLY FROM: ENCLOSED BREAKER 'DS-1A'
MOUNTING: SURFACE
ENCLOSURE: TYPE 1

VOLTS: 120/240 Single
PHASES: 1
WIRES: 3

A.I.C. RATING: 10K AIC
MAINS TYPE: MLO
MAINS RATING: 225 A
MCB RATING: N/A

Notes:

CKT	CCT TYPE	LOAD DESCRIPTION	TRIP	POLES	CB TYPE	A		B		CB TYPE	POLES	TRIP	LOAD DESCRIPTION	CCT TYPE	CKT
1	L; E; R; M	PANEL 'L3A'	100	2		4333	320				1	20	LTG - OFFICES/HALLWAY	L	2
3	--	--	--	--				3744	692		1	20	LTG - OFFICES	L	4
5	E	FACP	20	1		200	448				1	20	LTG - OFFICES	L	6
7	E	SERVER L6-30R	30	2				1500	1620		1	20	RCPT - CONFERENCE	R	8
9	--	--	--	--		1500	1440				1	20	RCPT - OFFICE 109, 110	R	10
11	--	SHUNT TRIP SPACE	--	1				--	1440		1	20	RCPT - OFFICE 122,123	R	12
13	R	SERVER ROOM	20	1		360	1440				1	20	RCPT - OFFICE 123, 125	R	14
15	--	SHUNT TRIP SPACE	--	1				--	1692		1	15	GF-1	E	16
17	R	SERVER ROOM	20	1		360	1260				1	20	RCPT - OFFICE 121, SERVER	R	18
19	--	SHUNT TRIP SPACE	--	1				--	1692		1	15	GF-2	E	20
21	E	EUH-1	30	2		2400	1193				1	20	RCPT - OFFICE 111, RR, EF-1,2	R; M	22
23	--	--	--	--				2400	1692		1	15	GF-3	E	24
25	R	RCPT - BREAK ROOM	20	1	GFCI	1080	1500			GFEP	1	20	HEAT TRACE	E	26
27	R	RCPT - HALLWAY, MECH	20	1				1260	1250		2	20	EWH-1	E	28
29	E	AC-1, CU-1	30	2		2340	1250				--	--	--	--	30
31	--	--	--	--				2340	750	GFCI	1	20	REF - BREAK ROOM	R	32
33	E	EWH-2	20	2		1250	180			GFCI	1	20	RCPT - BREAK ROOM	R	34
35	--	--	--	--				1250	180	GFCI	1	20	RCPT - BREAK ROOM	R	36
37	M	RESTROOM DOORS	20	1		200	180			GFCI	1	20	RCPT - BREAK ROOM	R	38
39	--	SPARE	20	1				0	180	GFCI	1	20	RCPT - BREAK ROOM	R	40
41	--	SPARE	20	1		0	180			GFCI	1	20	RCPT - BREAK ROOM	R	42
43	--	SPARE	20	1				0	0		1	20	SPARE	--	44
45	--	SPARE	20	1		0	0				1	20	SPARE	--	46
47	--	SPARE	20	1				0	--		1	--	BUSSED SPACE	--	48
49	--	SPARE	20	1		0	--				1	--	BUSSED SPACE	--	50
51	--	SPARE	20	1				0	--		1	--	BUSSED SPACE	--	52
53	--	SPARE	20	1		0	--				1	--	BUSSED SPACE	--	54
55	--	SPARE	20	1				0	--		1	--	BUSSED SPACE	--	56
57	--	E-MON D-MON METER	20	2		0	0				2	30	SPD	--	58
59	--	--	--	--				0	0		--	--	--	--	60
					Total Load:	23414 VA		23682 VA							
					Total Amps:	195 A		197 A							

CB TYPE LEGEND
GFCI: 5mA GROUND FAULT CIRCUIT INTERRUPTER
GFEP: 30mA GROUND FAULT PROTECTION FOR EQUIPMENT
AFCI: ARC FAULT CIRCUIT INTERRUPTER
CAFCI: COMBINATION ARC FAULT & 5mA GROUND FAULT CIRCUIT INTERRUPTER
HC(-ON/OFF): HANDLE CLAMP FOR LOCKING IN...
HT#: HANDLE TIE WITH GROUPING #
ST: SHUNT TRIP
LOCK: PERMANENTLY LOCKABLE BREAKER

CIRCUIT PHASE CODE LEGEND
N1. EXISTING LOAD ON EXISTING CIRCUIT BREAKER.
N2. NEW LOAD ON EXISTING CIRCUIT BREAKER.
N3. NEW LOAD ON NEW CIRCUIT BREAKER. CIRCUIT BREAKER AND AIC RATING TO MATCH EXISTING.

CCT TYPE:	LOAD	DEMAND LOAD	PANEL TOTALS	
LIGHTING:	2051 VA	2564 VA		
RECEPTACLE:	13710 VA	11855 VA	**TOTAL CONN. LOAD:**	47096 VA
MOTOR:	383 VA	433 VA	**TOTAL EST. LOAD:**	45804 VA
EQUIPMENT:	30952 VA	30952 VA	**TOTAL CONN.:**	196 A
KITCH EQUIP:			**TOTAL EST. DEMAND:**	191 A

NOTES:

COLORADO REGISTERED PROFESSIONAL ENGINEER JON BROOKS 35717 01/08/2026

AE FIRM	DESIGNED:	SUB SHEET NO.	TITLE OF SHEET	DRAWING NO.
PRIME: OTAK, INC. REDMOND, WA	AE DESIGN	E401	ELECTRICAL PANEL SCHEDULES	121 / 165639
SUBCONTRACTOR: AE DESIGN DENVER, CO	CADD TW/RS/BJLV		REHABILITATE KAWUNEECHE VISITOR CENTER ROCKY MOUNTAIN NATIONAL PARK	PMIS/PKG NO. 326235
	TECH REVIEW: JM/JEB/MS			SHEET 135 OF 177
	DATE: 01/16/2026			

LIGHTING FIXTURE SCHEDULE

TYPE	DESCRIPTION	MANUFACTURER	CATALOG NUMBER	VOLTAGE	LAMP QUAN.	LAMP WATTAGE	LAMP / CCT / CRI	MAX WATTAGE	LUMEN OUTPUT	DIMMING	FIXTURE FINISH	LOCATION	BOF/RFD/ OFH	NOTES
D1	6" LED RETROFIT DOWNLIGHT IN GYP CEILING, SWITCHABLE LUMENS SET TO 1000LM AND CCT SET TO 3500K	LITHONIA (OR APPROVED EQUAL)	LBR6-AL02[1000LM]-SWW1[3500K]-WR-TRW-MWD-MVOLT-UGZ-90CRI (OR APPROVED EQUAL)	120	1	13 W	LED / 3500K / 90CRI	13 VA	1000LM	0-10V TO 1%	WHITE	RECESSED CEILING	RFD = 4.5"	
D2	10" LED RETROFIT DOWNLIGHT IN 10" CEILING CUTOUT, SWITCHABLE CCT SET TO 3500K	LITHONIA (OR APPROVED EQUAL)	LBR10-20LM-SWW1[3500K]-AR-LSS-MWD-MVOLT-UGZ1-90CRI (OR APPROVED EQUAL)	120	1	25 W	LED / 3500K / 90CRI	25 VA	2000LM	0-10V TO 1%	CLEAR SEMI-SPECULAR	RECESSED CEILING	RFD = 7"	
D2EM	10" LED RETROFIT DOWNLIGHT IN 10" CEILING CUTOUT, SWITCHABLE CCT SET TO 3500K, INTEGRAL BATTERY BACKUP	LITHONIA (OR APPROVED EQUAL)	LBR10-20LM-SWW1[3500K]-AR-LSS-MWD-MVOLT-UGZ1-90CRI-E10WCP (OR APPROVED EQUAL)	120	1	25 W	LED / 3500K / 90CRI	25 VA	2000LM	0-10V TO 1%	CLEAR SEMI-SPECULAR	RECESSED CEILING	RFD = 7"	
D3	6" LED RETROFIT DOWNLIGHT IN GRID CEILING, SWITCHABLE LUMENS SET TO 1000LM AND CCT SET TO 3500K	LITHONIA (OR APPROVED EQUAL)	LBR6-AL02[1000LM]-SWW1[3500K]-WR-TRW-MWD-MVOLT-UGZ1-90CRI (OR APPROVED EQUAL)	120	1	13 W	LED / 3500K / 90CRI	13 VA	1000LM	0-10V TO 1%	WHITE	RECESSED CEILING	RFD = 4.5"	
L1EM	4' LINEAR SUSPENDED FIXTURE, INTEGRAL BATTERY BACKUP	LITHONIA (OR APPROVED EQUAL)	CLX-L48-5000LM-SEF-FDL-WD-MVOLT-GZ10-35K-90CRI-E10WLCP (OR APPROVED EQUAL)	120	1	32 W	LED / 3500K / 90CRI	32 VA	5000LM	0-10V TO 10%	WHITE	PENDANT CEILING	[NOTE 1]	1
R1	2'X2' RECESSED FLAT PANEL	LITHONIA (OR APPROVED EQUAL)	EPANL-2X2-4000LM-80CRI-35K-MIN1-ZT-MVOLT (OR APPROVED EQUAL)	120	1	37 W	LED / 3500K / 80CRI	37 VA	3963LM	0-10V TO 1%	WHITE	RECESSED CEILING	RFD = 2.19"	
R1EM	2'X2' RECESSED FLAT PANEL, INTEGRAL BATTERY BACKUP	LITHONIA (OR APPROVED EQUAL)	EPANL-2X2-4000LM-80CRI-35K-MIN1-ZT-MVOLT-E10WCP (OR APPROVED EQUAL)	120	1	37 W	LED / 3500K / 80CRI	37 VA	3963LM	0-10V TO 1%	WHITE	RECESSED CEILING	RFD = 2.19"	
S1	2"x4' SURFACE MOUNTED LED LINEAR, WIDE DIFFUSE DISTRIBUTION, INTEGRAL FIXTURE CONTROL WITH OCCUPANCY AND DAYLIGHT SENSOR	STARTEK (OR APPROVED EQUAL)	SLIMD-4'-1000-WD-35K-90-PB-SM-U-1C-VDO (OR APPROVED EQUAL)	120	1	32 W	LED / 3500K / 90CRI	32 VA	1000LM/FT	0-10V TO 1%	BLACK	SURFACE CEILING	OFH = 3.5"	
S1EM	2"x4' SURFACE MOUNTED LED LINEAR, WIDE DIFFUSE DISTRIBUTION, INTEGRAL FIXTURE CONTROL WITH OCCUPANCY AND DAYLIGHT SENSOR, INTEGRAL BATTERY BACKUP	STARTEK (OR APPROVED EQUAL)	SLIMD-4'-1000-WD-35K-90-PB-SM-U-1C-VDO-#FCEMB14 (OR APPROVED EQUAL)	120	1	32 W	LED / 3500K / 90CRI	32 VA	1000LM/FT	0-10V TO 1%	BLACK	SURFACE CEILING	OFH = 3.5"	
S2	4'x4' SURFACE MOUNTED LED PANEL, LOW LUMEN OUTPUT, SURFACE STANDOFF WITH INTEGRAL FIXTURE CONTROL LOCATED ON TOP OF FIXTURE	PRUDENTIAL (OR APPROVED EQUAL)	GazeSGH-48-LED3590-LO-LVO-D1-SC-SC-X3-DM01, IN FIXTURE CONTROL: DFCSJ-OEM-RF (OR APPROVED EQUAL)	120	1	58 W	LED / 3500K / 90CRI	58 VA	6200LM	0-10V TO 1%	OAK	SURFACE CEILING	OFH = 2.25"	
S3	6" SLIM SURFACE MOUNT ROUND DOWNLIGHT, SWITCHABLE CCT SET TO 3500K	SPITZER (OR APPROVED EQUAL)	ERS-0609L-R-5CC[3500K]-BK (OR APPROVED EQUAL)	120	1	14 W	LED / 3500K / 90CRI	14 VA	950LM	PHASE/ TRIAC	BLACK	SURFACE CEILING	OFH = 0.69"	
S3EM	6" SLIM SURFACE MOUNT ROUND DOWNLIGHT, SWITCHABLE CCT SET TO 3500K, INTEGRAL BATTERY BACKUP	SPITZER (OR APPROVED EQUAL)	ERS-0609L-R-5CC[3500K]-BK/ERS-0609L-R-EM (OR APPROVED EQUAL)	120	1	14 W	LED / 3500K / 90CRI	14 VA	950LM	PHASE/ TRIAC	BLACK	SURFACE CEILING	OFH = 2.23"	
S4	2' LED SURFACE STRIP FIXTURE	LITHONIA (OR APPROVED EQUAL)	CLX-L24-1500LM-SEF-FDL-WD-MVOLT-GZ10-35K-90CRI (OR APPROVED EQUAL)	120	1	18 W	LED / 3500K / 90CRI	18 VA	1500LM	0-10V TO 10%	WHITE	SURFACE CEILING	OFH = 3.75"	
S4EM	2' LED SURFACE STRIP FIXTURE, INTEGRAL BATTERY BACKUP	LITHONIA (OR APPROVED EQUAL)	CLX-L24-1500LM-SEF-FDL-WD-MVOLT-GZ10-35K-90CRI-E10WLCP (OR APPROVED EQUAL)	120	1	18 W	LED / 3500K / 90CRI	18 VA	1500LM	0-10V TO 10%	WHITE	SURFACE CEILING	OFH = 3.75"	
S5EM	6"x 48" LED LINEAR FIXTURE, IK10 RATED	PACO (OR APPROVED EQUAL)	PUCSA-4'-S-80-9-35-MV-WT-EMS-D1(OR APPROVED EQUAL)	120	1	72 W	LED / 3500K / 90CRI	72 VA	8000LM	0-10V TO 1%	WHITE	SURFACE CEILING	OFH = 4"	
T1	8' TRACK LIGHTING WITH 4 HEADS, FIELD CUTTABLE, 300W CURRENT LIMITER	WAC (OR APPROVED EQUAL)	TRACK: HT8-BK, HEAD:WTK-6022-F-835-BK, CURRENT LIMITER: THL-HLE-2A (OR APPROVED EQUAL)	120	4	22 W	LED / 3500K / 85CRI	300 VA	1650LM/HEAD	ELV/TRIAC TO 5%	BLACK	SURFACE WALL	BOF = 8'-0"	
W1	2' LED VANITY FIXTURE, SWITCHABLE CCT SET TO 3500K	LITHONIA (OR APPROVED EQUAL)	FMVCSLS-24IN-MVOLT-[3500K]-90CRI-KR (OR APPROVED EQUAL)	120	1	36 W	LED / 3500K / 90CRI	36 VA	3100LM	0-10V	CHROME	SURFACE WALL	ABOVE MIRROR	
W2	4' LED VANITY FIXTURE, SWITCHABLE CCT SET TO 3500K	LITHONIA (OR APPROVED EQUAL)	FMVCSLS-48IN-MVOLT-[3500K]-90CRI-KR (OR APPROVED EQUAL)	120	1	26 W	LED / 3500K / 90CRI	26 VA	2650LM	0-10V	CHROME	SURFACE WALL	ABOVE MIRROR	
W3EM	2' LED STRIP FIXTURE MOUNTED VERTICALLY IN EXISTING LOCATION, WIDE DISTRIBUTION, INTEGRAL BATTERY BACKUP	LITHONIA (OR APPROVED EQUAL)	CLX-L24-1500LM-SEF-FDL-WD-MVOLT-GZ10-35K-90CRI-E10WLCP (OR APPROVED EQUAL)	120	1	18 W	LED / 3500K / 90CRI	18 VA	1500LM	0-10V TO 10%	WHITE	SURFACE WALL	BOF = 6'-0"	
X1	EMERGENCY EXIT SIGN, LED, GLASS, CEILING-MOUNTED, SINGLE FACE, GREEN LETTERING	EVENLITE (OR APPROVED EQUAL)	SOVII-EM-G-1M-BR-SC-UC (OR APPROVED EQUAL)	120	1	5 W	LED / GREEN	5 VA	--	SWITCHING	BRUSHED BRASS	SURFACE CEILING	OFH = 12"	
X2	EMERGENCY EXIT SIGN, LED, GLASS, WALL-MOUNTED, SINGLE FACE, GREEN LETTERING	EVENLITE (OR APPROVED EQUAL)	SOVII-EM-G-1M-BR-SW-UC (OR APPROVED EQUAL)	120	1	5 W	LED / GREEN	5 VA	--	SWITCHING	BRUSHED BRASS	SURFACE WALL	BOF = 7'-0"	
X3	EMERGENCY EXIT SIGN, LED, GLASS, CEILING-MOUNTED, DOUBLE FACE, GREEN LETTERING	EVENLITE (OR APPROVED EQUAL)	SOVII-EM-G-2M-BR-SC-UC (OR APPROVED EQUAL)	120	1	5 W	LED / GREEN	5 VA	--	SWITCHING	BRUSHED BRASS	SURFACE CEILING	OFH = 12"	
X4	EMERGENCY PHOTOILLUMINASCENT EXIT SIGN, WALL MOUNTED, SINGLE FACE, GREEN LETTERING	EVENLITE (OR APPROVED EQUAL)	PH100-1-WH-U (OR APPROVED EQUAL)	120	1	1 W	LED / GREEN	1 VA	--	UNPOWERED	WHITE	SURFACE WALL	BOF = 7'-0"	
EA1	EXISTING HISTORIC EXTERIOR POLE LIGHT, REPLACEMENT AMBER BULB	LAMP: TCP (OR APPROVED EQUAL)	LAMP: TCP FA19D6024E26SFR92 (OR APPROVED EQUAL)	120	1	8 W	LED / 2400K	25 VA	800LM	SWITCHING	--	EXISTING POLE	OFH = 12'-0"	2
ED1	8" RETROFIT LED DOWNLIGHT, AMBER LIGHT, HEAVY DUTY TENSION SPRINGS	ALCON LIGHTING (OR APPROVED EQUAL)	11248-810-UNI-TS-WH(NONTF) (OR APPROVED EQUAL)	120	1	10 W	LED / AMBER	10 VA	1000LM	0-10V	WHITE	RECESSED CEILING	RFD = 7-5/8"	
ED1EM	8" RETROFIT LED DOWNLIGHT, AMBER LIGHT, HEAVY DUTY TENSION SPRINGS, CONNECTED TO INDIVIDUAL EMERGENCY MICROINVERTER	ALCON LIGHTING (OR APPROVED EQUAL)	11248-810-UNI-TS-WH(NONTF), MICROINVERTER: BODINE ELI-S-10 (OR APPROVED EQUAL)	120	1	10 W	LED / AMBER	10 VA	1000LM	0-10V	WHITE	RECESSED CEILING	RFD = 7-5/8"	
ES2EM	6" SURFACE MOUNTED LED DOWNLIGHT, AMBER LIGHT, CONNECTED TO EMERGENCY INVERTER	ALCON LIGHTING (OR APPROVED EQUAL)	11226-TF-R-UNI-WH (OR APPROVED EQUAL)	120	1	22 W	LED / AMBER	22 VA	250LM	0-10V	WHITE	SURFACE CEILING	OFH = 4-3/4"	

LIGHTING FIXTURE GENERAL NOTES

A	MANUFACTURER LISTED AS BASIS OF DESIGN OR APPROVED EQUAL PER SALIENT CHARACTERISTICS IN SPECIFICATION SECTION 26 51 00 - LIGHTING FIXTURES.
B	PROVIDE SAMPLES TO CONTRACTING OFFICER FOR VERIFICATION. REFER TO 265100 - LIGHTING FIXTURES FOR MORE INFORMATION.
C	ALL REFLECTOR LAMPS TO BE PROVIDED AS WIDE FLOOD DISTRIBUTION, UNLESS NOTED OTHERWISE.

LIGHTING FIXTURE SPECIFIC NOTES

1	CONTRACTOR SHALL MOUNT SUSPENDED STRIP LIGHTS SUCH THAT THE BOTTOM OF THE LIGHT IS IN LINE WITH THE BOTTOM OF MECHANICAL UNITS.
2	FIXTURE COMPONENTS SHALL BE HANDLED WITH THE UPTMOST CARE SUCH THAT REMAINING MATERIALS ARE NOT FURTHER IMPACTED OR DAMAGED DUE TO THE SCOPE OF WORK FOR REHABILITATION INDICATED.

COLORADO REGISTERED PROFESSIONAL ENGINEER 35717 01/08/2026

AE FIRM PRIME: OTAK, INC. REDMOND, WA SUBCONTRACTOR: AE DESIGN DENVER, CO	DESIGNED: AE DESIGN CADD TW/RS/BJLV TECH REVIEW: JM/JEB/MS DATE: 01/16/2026	SUB SHEET NO. E402	TITLE OF SHEET ELECTRICAL LIGHTING SCHEDULES REHABILITATE KAWUNEECHE VISITOR CENTER ROCKY MOUNTAIN NATIONAL PARK	DRAWING NO. 121 / 165639 PMIS/PKG NO. 326235 SHEET 136 OF 177

1/8/2026 2:58:34 PM Autodesk Docs://2024-260 NPS ROMO Kawuneeche VC DD-CA wOtak/NPS ROMO KAWUEECHE VISITOR CENTER - ELECTRICAL.rvt

LIGHTING CONTROL NOTES

GENERAL CONTROL NOTES	
G1	THE LIGHTING CONTROL SYSTEM CONSISTS OF THE FOLLOWING: a. STAND-ALONE CONTROLS b. NETWORKED WIRELESS DISTRIBUTED LIGHTING CONTROLS
G2	ALTERNATE MANUFACTURER'S WILL BE REVIEWED ACCORDING TO THE NOTES PROVIDED IN THE LIGHTING FIXTURE SCHEDULE.
G3	ALL WIRING DIAGRAMS WITHIN THESE DRAWINGS ARE PROVIDED TO COMMUNICATE THE DESIGN INTENT. SYSTEM SHALL BE WIRED ACCORDING TO THE APPROVED SHOP DRAWINGS.
G4	ALL STRUCTURED CABLE WIRING SHOWN ON RISER DIAGRAMS IS INTENDED TO BE BY CONTROL MANUFACTURER APPROVED STANDARD STRUCTURED CABLING, UNLESS OTHERWISE NOTED. EC SHALL PROVIDE ALL CABLING WITHIN THE LIGHTING CONTROL SYSTEM, CABLING BETWEEN THE NETWORKED HEAD-END AND THE BUILDINGS COMMUNICATION NETWORK SHALL BE PROVIDED BY THE LOW VOLTAGE CONTRACTOR.
G5	ALL MANUALLY DIMMED LIGHT LOADS SHALL BE CAPABLE OF DIMMING LIGHTS TO OFF SETTING. DIMMING COMPATIBILITY BETWEEN THE CONTROLS AND LIGHT FIXTURES SHALL BE COORDINATED BY THE EC TO ENSURE THAT LIGHTING IS ABLE TO DIM TO LEVEL NOTED ON LIGHTING FIXTURE SCHEDULE.
G6	LIGHTING CONTROL SYSTEM SHALL INCLUDE A MINIMUM OF (4) HOURS OF MANUFACTURER'S REPRESENTATIVE TIME ON SITE FOR SYSTEM CHECK-OUT AND GOV TRAINING. ELECTRICAL CONTRACTOR SHALL VIDEO RECORD TRAINING SESSION AND PROVIDE COPY OF VIDEO TO C.O. AS PART OF PROJECT COMPLETION SUBMITTALS.
G7	ALL DIGITAL SWITCHES FOR OVERRIDE CONTROL OF LIGHTING CONTROL SYSTEM(S) SHALL HAVE A MAXIMUM SETTING OF 2 HOURS PER IECC REQUIREMENTS.
G8	FINAL OCCUPANCY AND DAYLIGHT SENSOR LOCATION SHALL BE PROVIDED BY MANUFACTURER AND LOCATED PER APPROVED SHOP DRAWINGS AND DEVICE REQUIREMENTS. LOCATIONS INDICATED IN THESE DRAWINGS SHALL BE REVIEWED AND ALTERED AS NECESSARY FOR CORRECT OPERATION BY MANUFACTURER. IF OPERATIONS OF SENSORS DOES NOT MEET THE INTENT OUTLINED IN THESE DOCUMENTS THE MANUFACTURER REPRESENTATIVE SHALL PROVIDE FIELD RECTIFICATION SERVICES AS NECESSARY IN ORDER TO RECONFIGURE SYSTEM TO MEET OUTINED INTENT.
G9	OCCUPANCY SENSORS SHALL BE COORDINATED SUCH THAT THE MOUNTING IS NOT WITHIN 6' OF AIR RETURN SYSTEMS.
G10	PHOTOCELL SENSORS SHALL BE COORDINATED SUCH THAT THE DEVICE(S) ARE NOT WITHIN PROXIMATY TO INDIRECT LIGHTING OR WHERE SUBJECT TO VEILING REFLECTIONS FROM GLASS OR WATER SURFACES.
G11	WHERE APPLICABLE, WALLSTATIONS WITH MORE THAN ONE GANG SHALL BE CONGREGATED TOGETHER UNDER A SINGLE FACEPLATE, UON.
G12	PROVIDE SAMPLES TO CONTRACTING OFFICER FOR VERIFICATION. REFER TO 260923 - LIGHTING CONTROL DEVICES FOR MORE INFORMATION.
	STANDALONE LIGHTING CONTROL GENERAL NOTES
S1	APPROVED STANDALONE LIGHTING CONTROLS TO BE PROVIDED BY ONE OF THE FOLLOWING PRE-APPROVED MANUFACTURERS: a. LUTRON (OR APPROVAL EQUAL)

NETWORKED WIRELESS DISTRIBUTED LIGHTING CONTROLS	
N1	APPROVED DISTRIBUTED NETWORK BASED LIGHTING CONTROLS TO BE PROVIDED BY ONE OF THE FOLLOWING PRE-APPROVED MANUFACTURERS: a. LUTRON (OR APPROVED EQUAL)
N2	REFER TO ELECTRICAL LIGHTING LAYOUTS FOR LAYOUT OF DEVICES CONNECTED TO DISTRIBUTED LIGHTING CONTROL SYSTEM. DISTRIBUTED COMPONENTS ARE INDICATED IN THE “LIGHTING CONTROL DEVICE” SCHEDULE, THESE COMPONENTS START WITH THE DESIGNATION 'NW'.
N3	DISTRIBUTED LIGHTING CONTROL HEAD-ENDS/HUBS SHALL BE PROVIDED BASED ON THE QUANTITY OF ZONES INDICATED IN THE 'NETWORKED LIGHTING CONTROL ZONE SCHEDULE'. COMPONENTS PROVIDED SHALL BE CAPABLE OF PROVIDING FUNCTIONALITY IN ACCORDANCE WITH 'SEQUENCE OF OPERATIONS' SCHEDULE.
N4	ALL COMPONENTS OF NETWORKED DISTRIBUTED LIGHTING CONTROL SYSTEM REQUIRING LINE VOLTAGE CONNECTIONS SHALL BE FED FROM LOCAL UNSWITCHED LIGHTING CIRCUIT.
N5	ALL REMOTE LOAD CONTROLLERS SUCH AS POWER PACKS AND RELAY DEVICES SHALL BE LOCATED IN A READILY ACCESSIBLE LOCATION.
N6	ALL REMOTE LOAD CONTROLLERS SUCH AS POWER PACKS AND RELAY DEVICES SHALL BE LOCATED IN A READILY ACCESSIBLE LOCATION.
N7	POWER REQUIREMENTS SHALL BE CONFIRMED WITH APPROVED SUBMITTAL AND CONNECTED TO NEAREST UNSWITCHED LIGHTING CIRCUIT.
N8	DISTRIBUTED LIGHTING CONTROL HEAD-END/HUBS SHALL BE EQUIPPED WITH CAPABILITY FOR PROGRAMMATIC AND ZONING SOFTWARE EXPANSION FOR A MINIMUM OF 20% ADDITIONAL SPARE CAPACITY.

LIGHTING CONTROLS NAMING CONVENTION

SYSTEM TYPE:
- **N** = NETWORKED
- **R** = ROOM CONTROLLER
- **W** = WIRELESS
- - THE ABSENCE OF LETTERS UNDER 'SYSTEM TYPE' INDICATES A WIRED STANDALONE SYSTEM
- - THE ABSENCE OF 'W' MEANS THE SYSTEM IS WIRED

SENSOR TYPE:
- **O** = OCCUPANCY
- **V** = VACANCY
- **P** = PHOTOCELL

DEVICES:
- **D** = DIMMER
- **S** = SWITCH
- **H** = HUB
- **U** = UNIQUE DEVICE TYPE

NUMBERING:
- **1**,**2**,**3**... = QUANTITY AS REQUIRED FOR DIFFERENT HARDWARE, DEVICE CHARACTERISTICS, OR MOUNTING CONDITIONS.

LIGHTING SEQUENCE OF OPERATION

CONTROL SEQUENCE	ON	OFF	SENSOR TYPE	TIME OUT	DIMMING	CONTROLLED RECEPTACLE	DAYLIGHT HARVESTING	TARGET ILLUMINANCE (FC)	NOTES
ET1	AUTOMATIC ON WITH ASTRONOMICAL TIMECLOCK AT SUNSET, AUTOMATIC ON FROM 4AM TO SUNRISE	TIMECLOCK AUTOMATIC OFF BETWEEN 11PM AND 4AM, AUTOMATIC OFF AT SUNRISE	NONE	N/A	SWITCHING	NO	NO	--	
iO2	AUTOMATIC ON TO 100% OUTPUT UPON OCCUPANCY VIA INTEGRAL SENSOR	AUTOMATIC DIM TO 50% OUTPUT	INTEGRAL OCCUPANCY	15 MINUTES	DIMMING	NO	NO	--	
iVC1	MANUAL ON FOR LIGHTING FIXTURES, AUTOMATIC ON FOR CONTROLLED RECEPTACLES	AUTOMATIC OFF	INTEGRAL VACANCY	15 MINUTES	0-10V DIMMING	YES	NO	--	
M1	MANUAL ON	MANUAL OFF	NONE	N/A	SWITCHING	NO	NO	--	MANUAL CONTROLS HAVE BEEN SPECIFIED FOR OCCUPANCY SAFETY CONSIDERATIONS RELATED TO MAINTENANCE OF EQUIPMENT
MC1	MANUAL ON	MANUAL OFF	NONE	N/A	SWITCHING	YES	NO	--	
O1	AUTOMATIC ON	AUTOMATIC OFF	OCCUPANCY	15 MINUTES	SWITCHING	NO	NO	--	EXHAUST FANS SHALL BE CONNECTED TO OCCUPANCY SENSOR IN CONJUNCTION WITH LIGHTING
TD1	TIMECLOCK AUTOMATIC ON 30 MINUTES PRIOR TO BUSINESS HOURS	TIMECLOCK AUTOMATIC OFF 30 MINUTES AFTER CLOSE OF BUSINESS	NONE	N/A	0-10V DIMMING	NO	NO	--	
TP1	TIMECLOCK AUTOMATIC ON 30 MINUTES PRIOR TO BUSINESS HOURS, OVERRIDE WITH PHOTOCELL BELOW TARGET ILLUMINANCE	TIMECLOCK AUTOMATIC OFF 30 MINUTES AFTER CLOSE OF BUSINESS, OVERRIDE WITH PHOTOCELL ABOVE TARGET ILLUMINANCE	PHOTOCELL	N/A	0-10V DIMMING	NO	YES	30FC	PHOTOCELL OVERRIDE FUNCTIONALITY DURING TIMECLOCK ON HOURS ONLY
V1	MANUAL ON	AUTOMATIC OFF	VACANCY	15 MINUTES	SWITCHING	NO	NO	--	

LIGHTING CONTROL DEVICES

TYPE	DESCRIPTION	DETAILS
NETWORKED COMPONENTS		
NHUB	NETWORKED HEAD END LIGHTING CONTROL EQUIPMENT	
NWD1	NETWORKED MANUAL DIMMING BUTTONS, 0-10V	
NWD5	NETWORKED DIMMING BUTTON STATION	#2/E404
NWP1	NETWORKED, CEILING MOUNTED, CLOSED LOOP PHOTOCELL/ DAYLIGHT SENSOR	
STANDALONE CONTROL SYSTEMS		
VS1	WALL MOUNT, DUAL TECH, OCCUPANCY SENSOR SET TO VACANCY MODE, SINGLE RELAY	
WD1	LOW VOLTAGE DIMMING SWITCH	
WD4	LOW VOLTAGE DIMMING SWITCH, 4 ZONES	#2/E404
WO1	CEILING MOUNTED, PIR OCCUPANCY SENSOR	
WOS1	WALLSWITCH MOUNT, PIR OCCUPANCY SENSOR, SINGLE RELAY	
WS1	LOW VOLTAGE TOGGLE SWITCH	
WV1	CEILING MOUNTED, DUAL TECH, OCCUPANCY SENSOR	
WVD1	WALLSWITCH MOUNT, DUAL TECH, DIMMING, OCCUPANCY SENSOR SET TO VACANCY MODE, SINGLE RELAY	
WVS1	WALLSWITCH MOUNT, DUAL TECH, OCCUPANCY SENSOR SET TO VACANCY MODE, SINGLE RELAY	

LIGHTING ZONE SCHEDULE

ZONE ID	ZONE DESCRIPTION	DIMMING / SWITCHING	VOLTAGE	PANEL	CIRCUIT NUMBER	ZONE LOAD	CONTROL SEQUENCE
ez01	EXTERIOR REHABILITATED LIGHT POLES	SWITCHING	120	L3A	1	75 VA	ET1
ez02	EXTERIOR ADMIN WING SURFACE DOWNLIGHTS - EMERGENCY	0-10V	120	L3A	1	88 VA	ET1
ez03	EXTERIOR CANOPY WALKWAY SURFACE DOWNLIGHTS - EMERGENCY	0-10V	120	L3A	1	154 VA	ET1
ez04	EXTERIOR CANOPY RECESSED DOWNLIGHTS	0-10V	120	L3A	1	60 VA	ET1
z01	EXHIBIT DOWNLIGHTS	0-10V TO 1%	120	L2A	5	763 VA	TD1
z02	EXHIBIT DOWNLIGHTS - DAYLIGHT ZONE	0-10V TO 1%	120	L2A	5	200 VA	TP1
z04	EXHIBIT FUTURE TRACK LIGHTING	PHASE/TRIAC	120	L2A	4	1050 VA	TD1
z05	EXHIBIT FUTURE TRACK LIGHTING	PHASE/TRIAC	120	L2A	4	1050 VA	TD1
z08	VESTIBULE DOWNLIGHT	PHASE/ TRIAC	120	L2A	5	14 VA	TD1
z09	HALL 108 LINEARS	0-10V TO 1%	120	L1A	4	320 VA	iO2
z10	WILDERNESS DESK LINEARS	0-10V TO 1%	120	L1A	4	90 VA	TD1

COLORADO REGISTERED PROFESSIONAL ENGINEER 35717 01/08/2026

AE FIRM
PRIME: OTAK, INC. REDMOND, WA
SUBCONTRACTOR: AE DESIGN DENVER, CO

DESIGNED: AE DESIGN
CADD TW/RS/BJLV
TECH REVIEW: JM/JEB/MS
DATE: 01/16/2026

SUB SHEET NO. E403

TITLE OF SHEET
ELECTRICAL LIGHTING CONTROL SCHEDULES
REHABILITATE KAWUNEECHE VISITOR CENTER
ROCKY MOUNTAIN NATIONAL PARK

DRAWING NO. 121 165639
PMIS/PKG NO. 326235
SHEET 137 OF 177

1/8/2026 2:58:34 PM Autodesk Docs://2024-260 NPS ROMO Kawuneeche VC DD-CA wOtak/NPS ROMO KAWUEECHE VISITOR CENTER - ELECTRICAL.rvt

Autodesk Docs://2024-260 NPS ROMO Kawuneeche VC DD-CA wOtak/NPS ROMO KAWUEECHE VISITOR CENTER - ELECTRICAL.rvt
1/8/2026 2:58:35 PM

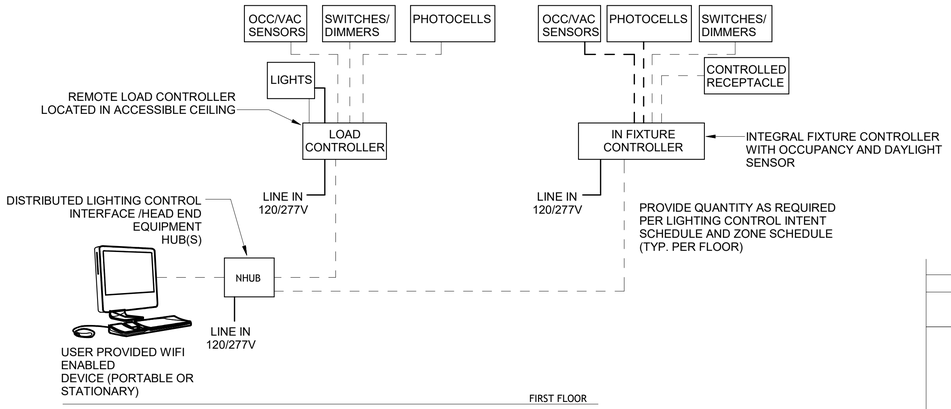

LEGEND

- RADIO FREQUENCY COMMUNICATION. TERMINATIONS AND SPECIFICATIONS PER MANUFACTURER. LOW-VOLTAGE
- INTEGRAL SENSOR TO FIXTURE CONTROLLER
- CABLING
- LINE VOLTAGE

REFER TO LIGHTING CONTROL NOTES FOR INFORMATION ON HEAD-END/HUB REQUIRED SPARE CAPACITY.

3 E404 WIRELESS LIGHTING CONTROLS RISER

EMERGENCY INVERTER SCHEDULE

INVERTER ID	DESCRIPTION	PANEL-CIRCUIT	CONNECTED LOAD	MAX LOAD	DETAIL
INV7	IOTA IIS 250 HE DR EMERGENCY INVERTER (OR APPROVED EQUAL)	L3A-1	154 VA	250W	#1/E404
INV8	IOTA IIS 125 HE SM EMERGENCY INVERTER (OR APPROVED EQUAL)	L3A-1	98 VA	125W	#1/E404

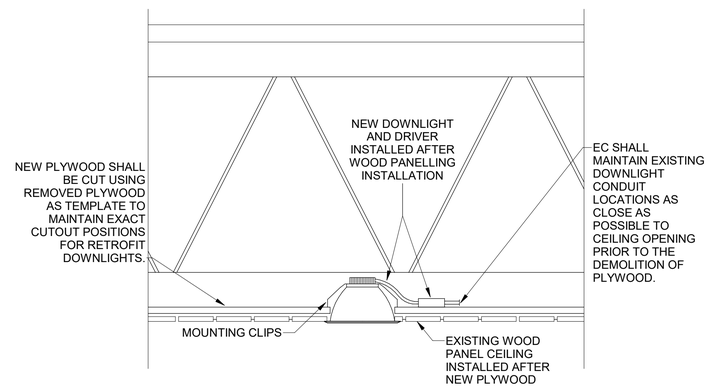

4 E404 EXHIBIT DOWNLIGHT CEILING DETAIL

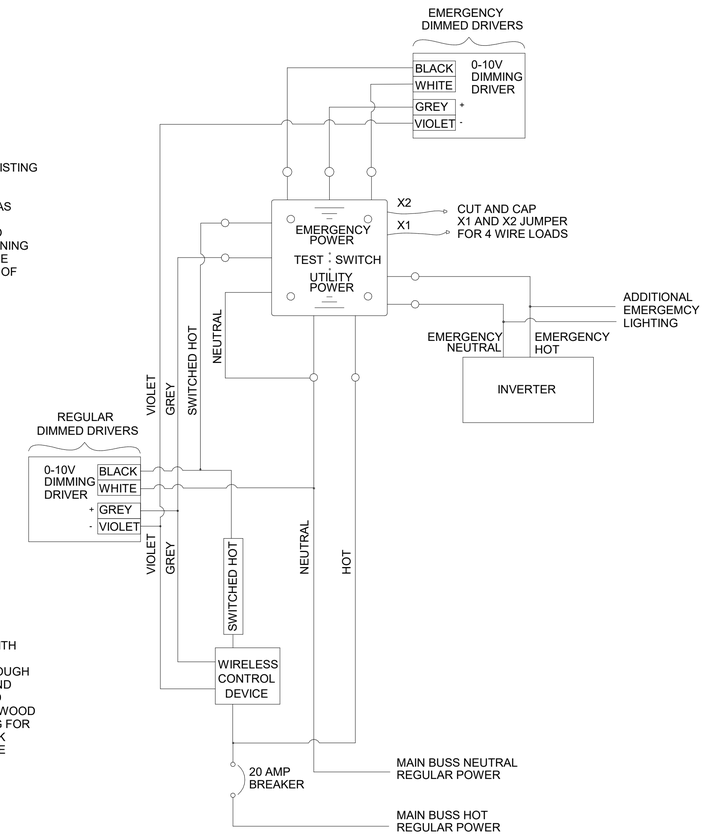

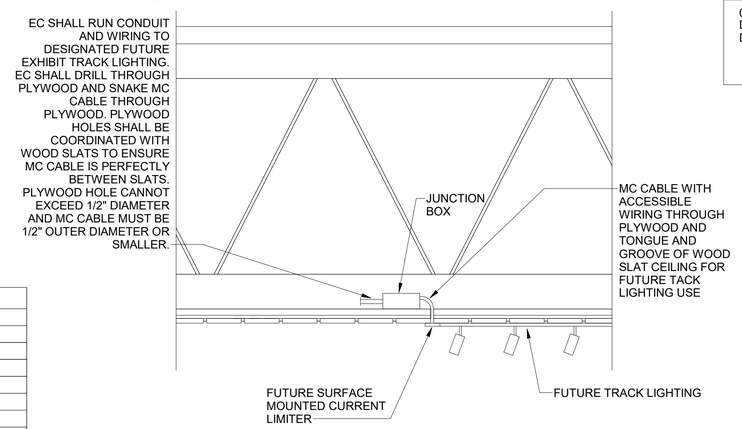

5 E404 EXHIBIT FUTURE TRACK CEILING DETAIL

WALLSTATION 'NDW4'	
LOCATION: AUDITORIUM	
ALL ON	a,b,c,d: 100% OUTPUT
ALL OFF	a,b,c,d: 0% OUTPUT
STAGE ON	c,d: 100% OUTPUT
STAGE OFF	c,d: 0% OUTPUT
SHOW	a,b,c,d: PER CONTRACTING OFFICER REQUEST
RAISE	DIM UP
LOWER	DIM DOWN

WALLSTATION 'NDW5'	
LOCATION: EXHIBIT SPACE	
ALL ON	z01-z05: 100% OUTPUT
ALL OFF	z01-z05: 0% OUTPUT
CANS	z01,z02: 100% OUTPUT
EXHIBIT	z04,z05: 100% OUTPUT
SHOW	z01-z05: PER CONTRACTING OFFICER REQUEST
ENTRY	z08,z10: 100% OUTPUT
RAISE	DIM UP
LOWER	DIM DOWN

TYPICAL KEYPAD DETAILS GENERAL NOTES

A. ALL BUTTON ENGRAVINGS ARE NOTED FOR DESIGN INTENT ONLY AND SHALL BE FINALIZED WITH THE CONTRACTING OFFICER PRIOR TO PROCUREMENT. EC SHALL CONFIRM THAT ENGRAVINGS FIT WITHIN MANUFACTURER CHARACTER LIMITS PRIOR TO PROCUREMENT.

B. ALL FACEPLATES AND BUTTON FINISHES SHALL BE PROVIDED WHITE UNLESS OTHERWISE NOTED BY THE CONTRACTING OFFICER. FINAL APPROVAL REQUIRED PRIOR TO PROCUREMENT.

2 E404 WALLSTATION ENGRAVING DETAIL

EMERGENCY LIGHTING CONTROL DEVICE GENERAL NOTES

1. USE WITH MANUFACTURER CONTROL TO DETERMINE THE SUITABILITY OF THE SPECIFIED DIMMER FOR SHUNT TRIP OPERATION.
2. EM SWITCHING DEVICE SHALL BE INSTALLED DOWNSTREAM OF THE EM LIGHTING INVERTER AND POWERED WITH THE SAME CIRCUIT AS THE ZONE IT IS CONTROLLING.
3. INVERTER DEVICE SHALL BE UL924 LISTED.

1 E404 EMERGENCY CONTROL DEVICE DIAGRAM

COLORADO REGISTERED PROFESSIONAL ENGINEER 35717 01/08/2026

AE FIRM PRIME: OTAK, INC. REDMOND, WA SUBCONTRACTOR: AE DESIGN DENVER, CO	DESIGNED: AE DESIGN CADD TW/RS/BJLV TECH REVIEW: JM/JEB/MS DATE: 01/16/2026	SUB SHEET NO. E404	TITLE OF SHEET ELECTRICAL LIGHTING CONTROL SCHEDULES REHABILITATE KAWUNEECHE VISITOR CENTER ROCKY MOUNTAIN NATIONAL PARK

DRAWING NO. 121 165639
PMIS/PKG NO. 326235
SHEET 138 OF 177

1/8/2026 2:58:35 PM Autodesk Docs://2024-260 NPS ROMO Kawuneeche VC DD-CA wOtak/NPS ROMO KAWUEECHE VISITOR CENTER - ELECTRICAL.rvt

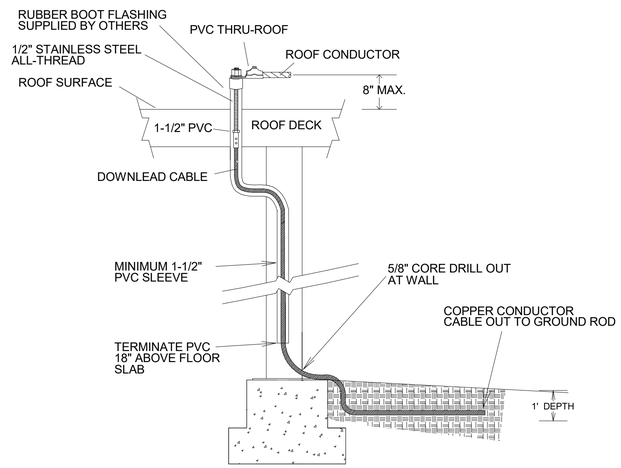

6 / E405 DOWNLEAD PVC DETAIL
SCALE: NONE

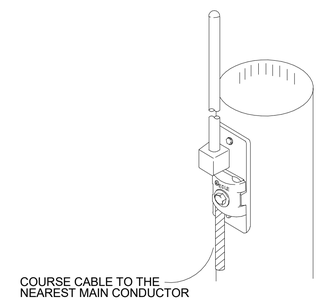

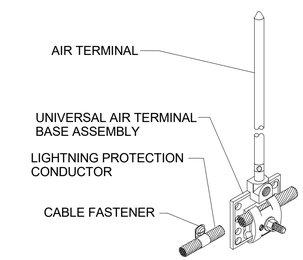

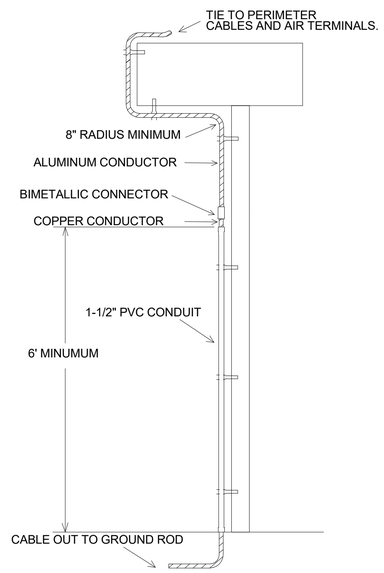

5 / E405 EXTERIOR DOWNLEAD DETAIL
SCALE: NONE

4 / E405 FLUE AIR TERMINAL DETAIL
SCALE: NONE

2 / E405 AIR TERMINAL WITH VERTICAL BASE
SCALE: NONE

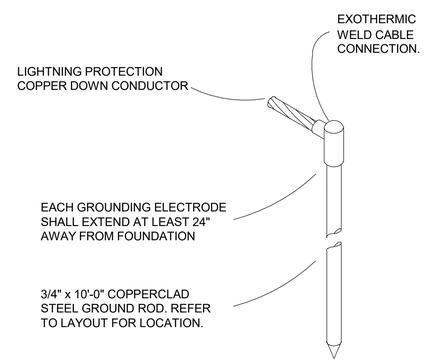

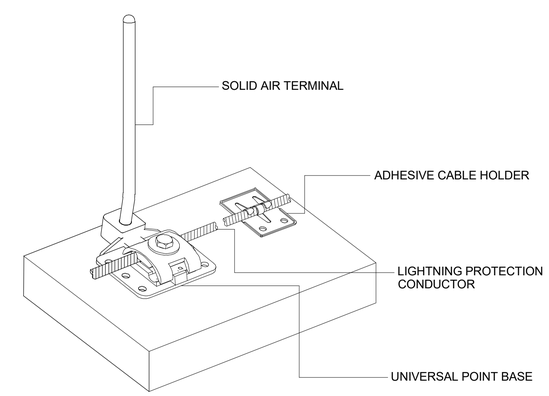

3 / E405 GROUND ROD DETAIL
SCALE: NONE

1 / E405 TOP MOUNT POINT BASE & AIR TERMINAL
SCALE: NONE

COLORADO REGISTERED PROFESSIONAL ENGINEER 35717 01/08/2026

AE FIRM PRIME: OTAK, INC. REDMOND, WA SUBCONTRACTOR: AE DESIGN DENVER, CO	DESIGNED: AE DESIGN CADD TW/RS/BJLV TECH REVIEW: JM/JEB/MS DATE: 01/16/2026	SUB SHEET NO. E405	TITLE OF SHEET ELEC LIGHTNING PROTECTION DETAILS REHABILITATE KAWUNEECHE VISITOR CENTER ROCKY MOUNTAIN NATIONAL PARK	DRAWING NO. 121 165639 PMIS/PKG NO. 326235 SHEET 139 OF 177

DISTRIBUTION & RACEWAY

- CONDUIT CONCEALED IN FLOOR OR UNDERGROUND
- CONDUIT EXPOSED OR CONCEALED IN WALL OR CEILING
- RACEWAY UP
- RACEWAY DOWN
- CONDUIT WITH CAPPING
- CONDUIT WITH BUSHING
- CONDUIT WITH CONTINUATION
- LADDER RACK — LENGTH AS INDICATED ON DRAWINGS
- CABLE TRAY — LENGTH AS INDICATED ON DRAWINGS
- MDF OR IDF BOUNDARY
- XX — PATHWAY/JUNCTION/OUTLET BOX
  - HH HANDHOLE
  - PB PULL BOX
- XX# — (HAND HOLE WILL BE SPECIFIED IN SCHEDULE) (PULL BOX WILL BE SPECIFIED IN SCHEDULE)

PATHWAY/JUNCTION/OUTLET BOX
(XX = TYPE, # = IDENTIFIER)

TELECOMMUNICATIONS LEGEND

- # #-# — TYPICAL TELECOMMUNICATION SYMBOLS WHERE FIRST (OR SINGLE) '#' DENOTES THE NUMBER OF NETWORK CABLES TO BE PROVIDED AT THE DEVICE, AND THE SECOND '#' DENOTES THE NUMBER OF VOICE CABLES TO BE PROVIDED AT THE DEVICE.
- XXX — 'XXX' REFERENCES A CABLE DEFINED IN THE EQUIPMENT SCHEDULES. REFER TO SCHEDULE KEY VALUES FOR CABLE REFERENCE AND ASSOCIATED REQUIREMENTS.
- TELECOMMUNICATION OUTLET
- CABLE TELEVISION (CATV) OUTLET
- FLOOR MOUNTED TELECOMMUNICATION/CATV OUTLET
- FLOOR MOUNTED INTEGRATED POWER / TELECOM OUTLET
- CLG — CEILING MOUNTED TELECOMMUNICATION/CATV OUTLET
- WALL MOUNTED WIRELESS ACCESS POINT (WAP) OUTLET
- CEILING MOUNTED WIRELESS ACCESS POINT (WAP) OUTLET

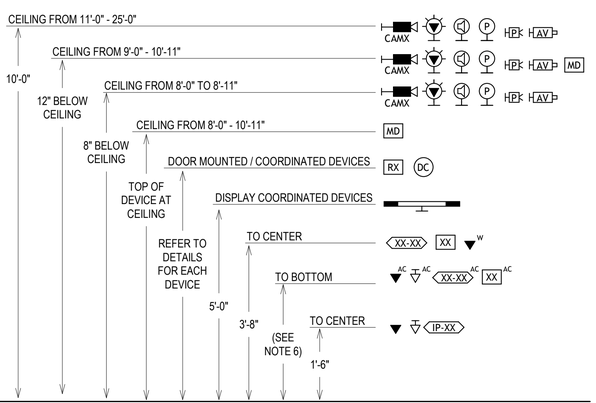

NOTES:

1. HEIGHTS INDICATED ON LEGEND REPRESENT THE CENTERLINE MOUNTING HEIGHT OF THE DEVICE'S BACKBOX/MOUNTING EQUIPMENT, UNLESS OTHERWISE NOTED.
2. NOT ALL CAMERA VERSIONS OUR SHOWN. THE SINGLE LENS CAMERA SHOWN SHALL REPRESENT THE MOUNTING HEIGHTS FOR ALL SECURITY CAMERAS, UNLESS OTHERWISE NOTED.
3. NOT ALL SYMBOL VARIATIONS ARE. FOR DEVICES WHERE THE 'SYSTEM CABLING' VERSION OF SYMBOL IS DEFINED, THE HIEGHT REQUIREMENTS SHALL BE APPLIED TO THE 'BUILDING NETWORK CABLING' VERSION AS WELL.
4. AUDIOVISUAL DEVICE SYMBOL SHOWN SHALL REPRESENT ALL AUDIOVISUAL DEVICE SUBSCRIPTS WITHIN THE SYMBOL UNLESS A DEVICE IS SPECIFICALLY CALLED OUT FOR A DIFFERENT HEIGHT ON THE LEGEND OR ON THE PLAN SHEETS.
5. WALL MOUNTED SECURITY DEVICE SYMBOL SHOWN SHALL REPRESENT ALL WALL MOUNTED SECURITY DEVICE SUBSCRIPTS WITHIN THE SYMBOL UNLESS A DEVICE IS SPECIFICALLY CALLED OUT FOR A DIFFERENT HEIGHT ON THE LEGEND OR ON THE PLAN SHEETS.
6. THE E.C. SHALL REFER TO ARCHITECTURAL ELEVATIONS TO COORDINATE ALL COUNTER HEIGHTS. ALL "AC" DEVICES SHALL HAVE BOTTOM OF BACK-BOX MOUNTED 4" ABOVE THE BACK/SIDE SPLASH.

ABBREVIATIONS AND SYMBOLS

AC	ABOVE COUNTER MOUNTED
ADA	AMERICANS WITH DISABILITIES ACT
AFF	ABOVE FINISHED FLOOR
AFG	ABOVE FINISHED GRADE
AHJ	AUTHORITY HAVING JURISDICTION
ALS	ASSISTIVE LISTENING SYSTEM
AV	AUDIO VIDEO
AVC	AUDIO VIDEO CONTRACTOR COORDINATED
BB	BACK BOX, FLAT PANEL MONITOR
BGM	BACKGROUND MUSIC
BRF	BOLLARD (RF TRANSPARENT)
BT	BLUETOOTH RECEIVER
C	CONDUIT
CATV	COMMUNITY ACCESS TELEVISION
CC	DRY CONTACT CLOSURE
CCTV	CLOSED CIRCUIT TELEVISION
CFCI	CONTRACTOR FURNISHED / CONTRACTOR INSTALLED
CFOI	CONTRACTOR FURNISHED / OWNER INSTALLED
CH	CHANNEL ROUTED, MOUNTED, TERMINATED
CLG	CEILING MOUNTED
CM	CART MOUNTED
CPU	CENTRAL PROCESSING UNIT
DM	DESK MOUNTED
DSP	DIGITAL SIGNAL PROCESSOR
DVD	DIGITAL VIDEO DISC/VERSATILE DISC
(E)	EXISTING TO REMAIN
EC	ELECTRICAL CONTRACTOR COORDINATED
ELEV	ELEVATOR CONTRACTOR COORDINATED
(ER)	EXISTING TO BE RELOCATED
FACP	FIRE ALARM CONTROL PANEL
FB	FLOOR BOX MOUNTED
FC	FIRE ALARM CONTRACTOR COORDINATED
FF	FURNITURE FEEDTHROUGH
FFE	FIXTURES, FURNITURE, AND EQUIPMENT
FM	FREQUENCY MODULATION
FP	VIDEO FLAT PANEL MONITOR
FPD	FLAT PANEL DISPLAY
GAS	GAS SERVICE / METER COORDINATED
GC	GENERAL CONTRACTOR COORDINATED
GPC	GENERAL PURPOSE COMPUTER
HDBT	HD BASED T
IC	INTERNET PROTOCOL
IR	INFRARED
IT	INFORMATION TECHNOLOGY
J	JUNCTION BOX
LAN	LOCAL AREA NETWORK
LIGH	LIGHTING CONTROL COORDINATED
LCD	LIQUID CRYSTAL DISPLAY
LTG	LIGHTING
MATV	MASTER ANTENNA TELEVISION
M	MULLION MOUNTED
MC	MECHANICAL CONTRACTOR COORDINATED
(N)	NEW
OAE	OR APPROVED EQUAL
OFCI	OWNER FURNISHED / CONTRACTOR INSTALLED
OFOI	OWNER FURNISHED / OWNER INSTALLED
OH	OVERHEAD
PA	PUBLIC ADDRESS
PB	PLENUM BOX
PC	PERSONAL COMPUTER
PDP	PLASMA DISPLAY PANEL
PH	PHASE
PJ	PLENUM BOX
PS	PROJECTION SCREEN
PT	POKE THROUGH MOUNTED
PTZ	PAN TILT ZOOM CAMERA
RCPT	RECEPTACLE
(R)	EXISTING TO BE REMOVED
RF	RADIO FREQUENCY
(RL)	RELOCATED LOCATION
RU	RACK UNIT (TIA/EIA RACK)
SC	SECURITY CONTRACTOR COORDINATED
SPC	SPRINKLER CONTROL CONTRACTOR COORDINATED
TO	TELECOMMUNICATIONS OUTLET
TC	TELECOMMUNICATIONS CONTRACTOR COORDINATED
TV	TELEVISION
UC	UNDER COUNTER/CABINET MOUNTED
UG	UNDERGROUND
UHF	ULTRA HIGH FREQUENCY
UON	UNLESS OTHERWISE NOTED
UPS	UNINTERRUPTIBLE POWER SUPPLY.
USB	UNIVERSAL SERIAL BUS
VHF	VERY HIGH FREQUENCY
VP	VIDEO PROJECTOR
VSB	VIDEO SOUND BAR
W	WALL PHONE
WAN	WIDE AREA NETWORK
WG	WIREGUARD
WM	WIRELESS MICROPHONE ANTENNA
WP	WEATHERPROOF OR WATERPROOF
+XX"	MOUNTING HEIGHT OF 'XX' INCHES
x	DETAIL NOTE
x	REVISION (DELTA) TAG

PROJECT GENERAL NOTES

1. THE WORK DESCRIBED HEREIN SHALL BE REVIEWED, COORDINATED, AND FACILITATED BY ALL CONTRACTORS; THIS INCLUDES, BUT IS NOT LIMITED TO THE COMMUNICATIONS, SECURITY, LOW VOLTAGE, AV, ELECTRICAL, AND GENERAL CONTRACTORS. FURTHERMORE, ALL WORK SHALL BE COORDINATED WITH THE CONTRACTING OFFICER TO SCHEDULE THE SEQUENCE OF ALL WORK.
2. THESE DRAWINGS ARE DIAGRAMMATIC IN NATURE; NOT ALL EQUIPMENT, PARTS, OR ANCILLARY PIECES ARE SHOWN FOR A COMPLETE SYSTEM. CONTRACTORS ARE RESPONSIBLE FOR FURNISHING, INSTALLING, AND SUCCESSFULLY TESTING FULLY FUNCTIONING AND COMPLETE SYSTEMS, UNLESS OTHERWISE NOTED.
3. DEVICES SHOWN ON PLAN ARE DIAGRAMMATIC. THE PRECISE LOCATION OF DEVICES SHALL BE COORDINATED WITH THE FINAL ARCHITECTURAL DRAWINGS AND APPROVED VENDOR SHOP DRAWINGS PRIOR TO ROUGH-IN. EXACT DEVICE LOCATIONS SHALL ALLOW FOR COORDINATED, PRE-DRYWALL RELOCATION, WITHIN A 10-FOOT RADIUS AT NO CHARGE TO THE CONTRACTING OFFICER.
4. ALL WORK SHOWN HEREIN SHALL BE ASSUMED TO BE RESPONSIBILITY OF THE CONTRACTOR, UNLESS OTHERWISE NOTED. REFER TO RESPONSIBILITY MATRIX FOR FURTHER CLARIFICATION AND DELINEATION OF CONSTRUCTION RESPONSIBILITIES.
5. EACH CONTRACTOR SHALL BE RESPONSIBLE FOR COORDINATING WITH ALL OTHER TRADES AND THEIR ASSOCAITED DRAWINGS/SPECIFICATIONS.
6. CONTRACTORS SHALL MAINTAIN AN UPDATED DOCUMENT SET CONTAINING THE MOST RECENT CONSTRUCTION DOCUMENTS, ALL FIELD AND/OR DOCUMENT CHANGES, AND UPDATED 'AS BUILT' DRAWINGS THROUGHOUT CONSTRUCTION.
7. ALL MATERIAL AND EQUIPMENT SHALL BE ERECTED, INSTALLED, CONNECTED, CLEANED, ADJUSTED, TESTED, CONDITIONED, AND PLACED IN SERVICE IN ACCORDANCE WITH THE MANUFACTURER'S DIRECTIONS AND RECOMMENDATIONS.
8. ALL CUTTING, DRILLING, AND PATCHING OF MASONRY, STEEL, OR IRON WORK BELONGING TO THE BUILDING MUST BE COORDINATED WITH ELECTRICAL, GENERAL, AND STRUCTURAL CONTRACTOR, AS WELL AS THE CONTRACTING OFFICER. UNDER NO CIRCUMSTANCES MAY STRUCTURAL WORK BE CUT UNLESS WRITTEN INSTRUCTION IS PROVIDED BY CONTRACTING OFFICER.
9. ALL MATERIAL, EQUIPMENT, WIRING DEVICES, CABLING, ETC. SHALL BE NEW, UNLESS SPECIFICALLY INDICATED OTHERWISE.
10. PULL BOXES AND HANDHOLES SHALL NOT BE INSTALLED IN PLACE OF CONDUIT BENDS. CONTRACTOR SHALL INSTALL PULL BOXES AND HANDHOLES IN STRAIGHT SECTIONS OF CONDUIT.
11. THE ENTIRE CABLE PLANT SHALL BE TESTED AND CERTIFIED BY CONTRACTOR AS DETERMINED BY BICSI, NEC, AND TIA/EIA STANDARDS AT A MINIMUM, UNLESS OTHERWISE SPECIFIED.
12. ALL TELECOMMUNIATIONS SYSTEMS CONDUITS WHICH ARE INTERIOR OR EXPOSED IN THE EXTERIOR SHALL BE METALLIC CONDUIT AS INDICATED IN SPECIFICATIONS. UNDER NO CIRCUMSTANCES SHALL FLEXIBLE CONDUIT BE UTILIZED FOR PATHWAYS. ALL CONDUITS SHALL BE, AT MINIMUM, 1 INCH IN TRADE SIZE, UNLESS SPECIFICALLY AND OTHERWISE NOTED. WHEN CONDUIT IS EXPOSED, COORDINATE WITH CONTRACTING OFFICER FOR CONDUIT COLOR AND/OR PAINTING REQUIREMENTS.
13. ALL TELECOMMUNICATIONS SYSTEMS CONDUITS WHICH ARE UNDERGROUND SHALL BE RIGID POLYVINYL CHLORIDE CONDUIT (PVC), UNLESS OTHERWISE NOTED. REFER TO SPECIFICATIONS FOR MORE INFORMATION.
14. NO MORE THAN TWO (2) 90-DEGREE BENDS (OR A TOTAL OF 180-DEGREES) MAY BE INSTALLED BETWEEN PULLBOXES, HANDHOLES, OR PULL POINTS. A 4 INCH SQUARE, 2-1/8 INCH DEEP BACKBOX SHALL BE PROVIDED AND INSTALLED AS A PULL BOX FOR 1 INCH CONDUIT PATHWAYS, UNLESS OTHERWISE NOTED. FOR ALL OTHER PATHWAYS, REFER TO DRAWINGS AND SPECIFICATIONS FOR PULL BOX SIZE REQUIREMENTS.
15. FOR INTERIOR SPACES, NO MORE THAN 100 FEET OF PATHWAY MAY BE INSTALLED BETWEEN PULLBOXES OR PULL POINTS.
16. FOR EXTERIOR PATHWAY, NO MORE THAN 500 FEET OF PATHWAY MAY BE INSTALLED BETWEEN HANDHOLES OR PULL POINTS.
17. ALL MANUFACTURER CABLE BEND RADIUS REQUIREMENTS SHALL BE OBSERVED AND PROTECTED DURING THE INSTALLATION OF CABLING. FOR 2 INCH (TRADE SIZE) CONDUITS OR LESS, CONDUITS BEND RADIUS SHALL BE A MINIMUM OF 6 TIMES THE CONDUIT DIAMETER. FOR CONDUITS GREATER THAN 2 INCHES (TRADE SIZE), CONDUIT BEND RADIUS SHALL BE A MINIMUM OF 10 TIMES THE CONDUIT DIAMETER. ALL CONDUIT BENDS SHALL BE "SWEEPING" TYPE, NO BEND FITTINGS ARE PERMITTED.
18. FOR LOCATIONS WHERE BOTH POWER AND NETWORK OUTLETS ARE TO BE INSTALLED, NETWORK OUTLETS SHALL BE IMMEDIATELY ADJACENT AND ORTHOGONAL TO THE POWER OUTLET, UNLESS OTHERWISE NOTED. THE CONTRACTOR SHALL ENSURE THAT ALL NETWORK OUTLET LOCATIONS AND POWER OUTLET LOCATIONS ARE COORDINATED TO BE ADJACENT TO EACH OTHER WITH PROPER SPACING PER ARCHITECTURAL ELEVATIONS AND/OR NOTES.
19. BACK-TO-BACK MOUNTED OUTLETS IN WALLS ARE NOT PERMITTED, BOXES SHALL MAINTAIN A MINIMUM OF 12-INCHES OF SEPARATION. IN CASES WHERE OUTLET BOXES IN ADJACENT ROOMS ARE IN THE SAME STUD CAVITY, PROVIDE A LAYER OF EXPANDABLE SPRAY FOAM INSULATION AROUND EACH BOX CAVITY. FOR ALL OUTLETS/BACKBOXES INSTALLED INTO ACOUSTICALLY-RATED PARTITIONS (TYPICALLY OFFICES, CONFERENCE ROOM, CLASSROOMS, PRESENTATION SPACES, ETC.), PROVIDE ACOUSTICAL OUTLET BACKER PUTTY AND/OR PUTTY PADS. ACOUSTICAL RATING SHALL BE MAINTAINED PER ASTM C919 AND ASTM E497, AND BE TESTED TO UL 263 (ASTM E119) AND UL 1479 (ASTM E814) STANDARDS.
20. ALL CABLING SHALL BE SUPPORTED BY DEDICATED INFRASTRUCTURE AND EQUIPMENT. THIS INCLUDES CABLE TRAY, CONDUIT, AND MANUFACTURED SLEEVES. CABLE SHALL NOT BE SUPPORTED BY OTHER TRADE'S EQUIPMENT OR ARCHITECTURAL ELEMENTS. THIS INCLUDES, BUT IS NOT LIMITED TO, HVAC DUCTS, PIPING, ELECTRICALLY DEDICATED CONDUIT, CEILING TILE/GRID, ETC.
21. CABLE TRAY, CONDUIT, SLEEVES, PENETRATIONS, AND ANY OTHER PATHWAYS USED FOR ROUTING TELECOMMUNICATIONS (NETWORK/VOICE/CATV) CABLING SHALL BE DEDICATED TO TELECOMMUNICATION CABLING. NO OTHER TRADE, SERVICE, OR SYSTEM SHALL UTILIZE SAME PATHWAY.
22. CABLE TRAY SHALL ONLY BE INSTALLED WHERE INDICATED AND ABOVE ACCESSIBLE CEILINGS. EXPOSED OR NON-ACCESSIBLE CABLING IS NOT ACCEPTABLE; CONDUIT PATHWAY SHALL BE PROVIDED AND INSTALLED FOR ROUTING OF CABLING FROM EACH OUTLET BACK TO THE NEAREST CABLE TRAY OR TELECOMMUNICATION SPACE. CONDUIT SHALL BE UTILIZED FOR CABLE ROUTING THROUGH NON-ACCESSIBLE CEILINGS, OPEN CEILING ENVIRONMENTS, AND/OR HIGH CEILING ENVIRONMENTS WHERE THE CABLE IS BELOW THE CEILING, UNLESS OTHERWISE NOTED.
23. ALL INTERIOR CABLING SHALL BE PLENUM RATED UNLESS SPECIFICALLY AND OTHERWISE NOTED.
24. ALL BACKBOX INSTALLATIONS SHALL BE COORDINATED TO ENSURE THAT MUD RING/EXTENSION RING IS MOUNTED FLUSH WITH WALL SURFACE TO ALLOW PROPER MOUNTING OF FACEPLATE(S).
25. FOR ALL OPEN ENDED CONDUIT NOT TERMINATED INTO A BOX OR ENLCOSURE, CONTRACTOR SHALL PROVIDE AND INSTALL A NYLON BUSHING AND CONDUIT END.
26. A PULL STRING SHALL BE PROVIDED FOR ALL CONDUIT PATHWAYS. FOR EXTERIOR PATHWAYS, PULL STRING SHALL BE MULE TAPE WITH A MINIMUM TENSION STRENGTH OF 2200 LBS. FOR INTERIOR PATHWAYS, A STRING OR MULE TAPE WITH A MINIMUM TENSION STRENGTH OF 200 LBS. SHALL BE INSTALLED. ALL PULL STRINGS SHALL BE TIED OFF WITH 3 FEET OF SLACK ON EACH END.

COLORADO REGISTERED PROFESSIONAL ENGINEER 35717 01/08/2026

AE FIRM PRIME: OTAK, INC. REDMOND, WA SUBCONTRACTOR: AE DESIGN DENVER, CO	DESIGNED: AE DESIGN CADD TW/RS/BJLV TECH REVIEW: JM/JEB/MS DATE: 01/16/2026	SUB SHEET NO. T000	TITLE OF SHEET TECHNOLOGY COVERSHEET REHABILITATE KAWUNEECHE VISITOR CENTER ROCKY MOUNTAIN NATIONAL PARK

DRAWING NO. 121 165639
PMIS/PKG NO. 326235
SHEET 140 OF 177

1/8/2026 2:58:35 PM Autodesk Docs://2024-260 NPS ROMO Kawuneeche VC DD-CA wOtak/NPS ROMO KAWUEECHE VISITOR CENTER - ELECTRICAL.rvt

MATRIX OF CONSTRUCTION RESPONSIBILITIES

THE RESPONSIBILITIES LISTED HEREIN ARE PROVIDED AS A RECOMMENDATION AND DO NOT SUPERSEDE OR REPLACE ANY CONTRACTS, OR OTHERWISE DEFINED RESPONSIBILITIES, BETWEEN THE DESIGNATED PARTIES. IN ADDITION, THE INFORMATION IS MEANT TO INDICATE GENERAL RESPONSIBILITY FOR A SCOPE OF WORK AND IN NO WAY DISALLOWS THE RESPONSIBLE PARTY TO SUBCONTRACT THE SCOPE.

RESPONSIBLE PARTY	GENERAL CONTRACTOR		ELECTRICAL CONTRACTOR		TELECOM CONTRACTOR		LOW VOLTAGE CONTRACTOR		AUDIO-VISUAL CONTRACTOR		SECURITY CONTRACTOR		CONTRACTING OFFICER		NOTES
SCOPE OF WORK	FURNISH	INSTALL	FURNISH	INSTALL	FURNISH	INSTALL	FURNISH	INSTALL	FURNISH	INSTALL	FURNISH	INSTALL	FURNISH	INSTALL	
BUDGET OF WORK	GC		GC		GC		GC		GC		GC		FFE		
DEMOLITION															
GENERAL															
SITE															
INCOMING SERVICE PROVIDER CABLING & COORDINATION													X	X	1
CAMPUS / LAN CABLING & COORDINATION					X	X									
HANDHOLE / MAINTENANCE HOLE			X	X											9
EXTERIOR CONDUIT PATHWAY / DUCTBANK			X	X											
TRENCHING			X	X											
INTERIOR INFRASTRUCTURE															
GROUNDING & BONDING			X	X	X	X									3, 4
INTERIOR CONDUIT PATHWAY			X	X											
BACKBOX / JUNCTION BOX			X	X											
FLOOR BOX / POKE THROUGH			X	X		X									5
CABLE TRAY			X	X											
J-HOOK / SLING					X	X									
SLEEVE / CONDUIT PENETRATIONS			X	X	X	X									6, 7
TELECOMMUNICATIONS															
PLYWOOD BACKBOARD	X	X													
LADDER RACK / LADDER RUNWAY / ACCESSORIES					X	X									
RACK / FRAME / CABINET (TELECOM)					X	X									
WIREMANAGER					X	X									
FIBER PATCH PANEL					X	X									
COPPER PATCH PANEL					X	X									
POWER DISTRIBUTION UNIT (PDU)					X	X									
UNINTERRUPTIBLE POWER SUPPLY (UPS)													X	X	
MISCELLANEOUS RACK COMPONENTS (DRAWER, SHELF, ETC.)					X	X									
BACKBONE CABLING SYSTEM (NETWORK, VOICE, CATV)					X	X									
HORIZONTAL CABLING SYSTEM (NETWORK, VOICE, CATV)					X	X									
FACEPLATE / JACK / SURFACE MOUNT BOX					X	X									
PATCH CABLE (INTERIOR TO TELECOMMUNICATIONS ROOM)					X									X	
PATCH CABLE (END DEVICE / OUTLET)					X	X		X		X		X		X	2
LABELING					X	X									
WIRELESS ACCESS POINT (WAP)													X	X	
NETWORK EQUIPMENT (SWITCH, HEADEND, FIREWALL, ETC.)													X	X	
PERIPHERAL EQUIPMENT (PHONE, PRINTER, PC, ETC.)													X	X	
AUDIO VISUAL															
RACK / FRAME / CABINET (AV)									X	X					
AMPLIFIER / CONTROLLER / PROCESSOR / MATRIX									X	X					
MICROPHONE									X	X					
FACEPLATE / JACK									X	X					
CABLING (NON-NETWORK)									X	X					
SPEAKER									X	X					
COAXIAL EQUIPMENT (SPLITTER, AMP, ETC.)					X	X									
DISPLAY & MOUNT									X	X					
DISPLAY BACKING	X	X													
PROJECTOR									X	X					
PROJECTOR SCREEN									X	X					
SECURITY - ACCESS CONTROL (ACS)															
ACS HEADEND / CONTROLLER / PANEL											X	X			
ACS SOFTWARE, PROGRAMMING, & INTEGRATION											X	X			
CARD READER / KEYPAD AND LICENSE (AUTHENTICATION DEVICE)											X	X			
REQUEST TO EXIT (WHEN NOT INTEGRAL TO DOOR HARDWARE)											X	X			
INTERCOM & INTERCOM MASTER STATION											X	X			
DOOR POSITION SWITCH											X	X			
DOOR RELEASE BUTTON											X	X			
DOOR HARDWARE / COMPONENTS	X	X													
SECURITY - VIDEO SURVIELLANCE SYSTEM (VSS)															
VSS NETWORK VIDEO RECORDER (NVR)											X	X			
VSS SOFTWARE, PROGRAMMING, & INTEGRATION											X	X			
VSS DEDICATED SWITCH											X	X			
CAMERA AND LICENSE											X	X			
SECURITY - INTRUSION DETECTION (ID)															
ID HEADEND / CONTROLLER / PANEL											X	X			
ID SOFTWARE, PROGRAMMING, & INTEGRATION											X	X			
MOTION SENSOR											X	X			
GLASS BREAK SENSOR											X	X			
LOCK-DOWN BUTTON											X	X			
PANIC / DURESS BUTTON											X	X			
AUTO-DIALER & DIAL DESTINATION COORDINATION											X	X			

NOTES:

1. CONTRACTOR SHALL COORDINATE WITH CONTRACTING OFFICER REGARDING TIMELINE OF INSTALLATION AND REQUIREMENTS FOR INSTALLATION TO ENSURE A TIMLEY INSTALLATION.
2. THE PARTY RESPONSIBLE FOR INSTALLING THE END DEVICE (PC, CAMERA, WAP, ETC.) SHALL BE RESPONSIBLE FOR INSTALLING THE END-OF-RUN PATCH CABLE. AFTER INSTALLATION, VERIFICATION OF OPERABILITY IS REQUIRED.
3. THE ELECTRICAL CONTRACTOR SHALL i) EXTEND THE BUILDING GROUND TO EACH TELECOMMUNICATION SPACE ii) PROVIDE AND INSTALL THE BUSBAR(S), GROUNDING CABLES, AND ASSOCIATED EQUIPMENT, iii) AND ENSURE EACH TELECOMMUNICATION SPACE HAS PROPER ACCESS TO BUILDING GROUND THROUGH THE LOCAL BUSBAR AS SHOWN IN THE DRAWINGS.
4. FOR ALL DEVICES, EQUIPMENT, PATHWAY, AND OTHER SUCH MATERIAL REQUIRED TO BE GROUNDED, THE CONTRACTOR/PARTY, WITH WHICH THE DEVICE, EQUIPMENT, PATHWAY OR OTHER SUCH MATERIAL WAS INSTALLED BY, SHALL BE RESPONSIBLE FOR ITS PROPER BONDING AND GROUNDING.
5. THE ELECTRICAL CONTRACTOR SHALL BE RESPONSIBLE FOR THE PROVISION AND INSTALLATION OF ALL FLOOR BOXES AND POKE THROUGHS, AS WELL AS ALL CONDUIT/PATHWAY REQUIREMENTS PERTAINING TO IT, REGARDLESS IF THERE IS POWER CABLING INCLUDED AT DEVICE. THE TELECOM CONTRACTOR SHALL COORDINATE WITH DRAWINGS AND ELECTRICAL CONTRACTOR TO ENSURE LOW VOLTAGE INFRASTRUCTURE AND CABLING REQUIREMENTS ARE MET AND SHALL PROVIDE AND INSTALL ALL CABLING AND FACEPLATE/TERMINATION EQUIPMENT PERTAINING TO DEVICE.
6. FOR ALL PENETRATIONS SHOWN IN DRAWINGS, THE ELECTRICAL CONTRACTOR SHALL PROVIDE AND INSTALL. THE ELECTRICAL CONTRACTOR SHALL ENSURE THE EXTERIOR OF EACH PENETRATION IS FIRE-RATED TO MATCH OR EXCEED THE PENETRATED SURFACE.
7. ALL PENETRATIONS NOT SHOWN ON DRAWINGS, BUT REQUIRED FOR CABLING INSTALLATION, SHALL BE PROVIDED AND INSTALLED BY THE CABLING INSTALLATION CONTRACTOR/TEAM.
8. NA
9. THIS SCOPE IS DETERMINED TO BE EXISTING TO REMAIN AND SHALL BE UTILIZED THROUGH COORDINATION WITH CONTRACTING OFFICER AND OTHER TRADES.

SECURITY LEGEND

'CAMX' DEFINES THE CAMERA TYPE. REFER TO SCHEDULES FOR MORE INFORMATION. EACH CAMERA SHALL RECEIVE ONE (1) BUILDING NETWORK CONNECTION.

CEILING-MOUNTED / WALL-MOUNTED

- SINGLE LENSE CAMERA
- DUAL LENSE CAMERA
- TRIPLE LENSE CAMERA
- QUAD LENSE CAMERA
- MOTION DETECTOR - DIRECTIONAL
- MOTION DETECTOR - OMNI-DIRECTIONAL

WALL-MOUNTED
POLE-MOUNTED
CORNER-MOUNTED

SECURITY DEVICE - REFER TO SPECIAL SYMBOLS LEGEND. 'XX' DENOTES THE DEVICE DESCRIPTION FROM REFERENCE BELOW.

WALL MOUNTED SECURITY DEVICES

CR	CARD READER DEVICE
KP	KEYPAD ACCESS DEVICE
CK	CARD READER / KEYPAD COMBINATION DEVICE
BM	BIOMETRIC COMBINATION DEVICE
IC	INTERCOM (REMOTE)
IM	INTERCOM (MASTER)
DU	DURESS BUTTON
RX	REQUEST-TO-EXIT DEVICE
KI	KEYPAD INTERFACE - INTRUSION SYSTEM
DB	DOOR BELL

CEILING MOUNTED SECURITY DEVICES

DC	DOOR CONTACT
GB	GLASS BREAK SENSOR

AUDIO-VISUAL LEGEND

- PROJECTION SCREEN - CEILING MOUNTED
- PROJECTION SCREEN - WALL MOUNTED
- DISPLAY - CEILING MOUNTED
- DISPLAY - WALL MOUNTED
- VIDEO PROJECTOR
- VIDEO PROJECTOR - WALL MOUNTED SHORT THROW
- AUDIOVISUAL CAMERA - CEILING MOUNTED
- AUDIOVISUAL CAMERA - WALL MOUNTED
- AUDIO-VISUAL DEVICE - REFER TO SPECIAL SYMBOLS LEGEND FOR MOUNTING REQUIREMENTS

IP	INTERFACE PLATE
CP	CONTROL PANEL
AR	ANTENNA RECEIVER
RS	ROOM SCHEDULER
IC	INTERCOM DEVICE
VC	VOLUME CONTROL

- AUDIOVISUAL SPEAKER - CEILING MOUNTED
- AUDIOVISUAL SPEAKER - WALL MOUNTED
- PAGING SPEAKER - CEILING MOUNTED
- PAGING SPEAKER - WALL MOUNTED

SYMBOL NOMENCLATURE LEGEND

FOR DEVICES SHOWN AS A FILLED-IN SYMBOL, ONE (1) BUILDING NETWORK CABLING CONNECTION SHALL BE REQUIRED AT THAT DEVICE/OUTLET. INFRASTRUCTURE SHALL BE DETERMINED PER DEVICE/OUTLET REQUIREMENTS. (NOT ALL SYMBOL OPTIONS ARE SHOWN BELOW)

XX# XX-## Sx Px

FOR DEVICES SHOWN AS AN UNFILLED SYMBOL, A SYSTEM CABLING CONNECTION IS REQUIRED AT THE DEVICE/OUTLET. INFRASTRUCTURE SHALL BE DETERMINED PER DEVICE/OUTLET REQUIREMENTS. (NOT ALL SYMBOL OPTIONS ARE SHOWN BELOW)

AV XX# XX-## S# P#

DEVICE MOUNTING TYPES ARE DEFINED BELOW. (NOT ALL SYMBOL OPTIONS ARE SHOWN)

CEILING MOUNTED DEVICE / FACEPLATE — XX-## XX#
FLOOR MOUNTED DEVICE / FACEPLATE — XX-## FB/PT XX# FB/PT
WALL MOUNTED FACEPLATE — XX-## XX#
WALL MOUNTED DEVICE — XX-## XX#
CORNER MOUNTED DEVICE — XX-## XX#
POLE MOUNTED DEVICE — XX-## XX#

THE ALPHANUMERIC TAG IS MEANT TO INDICATE A DEVICE BY ITS CATEGORY AND ITS SPECIFIC KEY REFERENCE WITHIN THE SCHEDULES. REFER TO THE 'KEY ID' WITHIN THE SCHEDULES FOR DEVICE REFERENCE. (NOT ALL SYMBOL OPTIONS ARE SHOWN)

XX-## XX# XX#

COLORADO REGISTERED PROFESSIONAL ENGINEER — JON BROOKS — 35717 — 01/08/2026

AE FIRM PRIME: OTAK, INC. REDMOND, WA SUBCONTRACTOR: AE DESIGN DENVER, CO	DESIGNED: AE DESIGN CADD TW/RS/BJLV TECH REVIEW: JM/JEB/MS DATE: 01/16/2026	SUB SHEET NO. T001	TITLE OF SHEET TECHNOLOGY RESPONSIBILITY MATRIX REHABILITATE KAWUNEECHE VISITOR CENTER ROCKY MOUNTAIN NATIONAL PARK

DRAWING NO. 121 165639
PMIS/PKG NO. 326235
SHEET 141 OF 177

1/8/2026 2:58:36 PM Autodesk Docs://2024-260 NPS ROMO Kawuneeche VC DD-CA wOtak/NPS ROMO KAWUEECHE VISITOR CENTER - ELECTRICAL.rvt

Autodesk Docs://2024-260 NPS ROMO Kawuneeche VC DD-CA wOtak/NPS ROMO KAWUEECHE VISITOR CENTER - ELECTRICAL.rvt

1/8/2026 2:58:36 PM

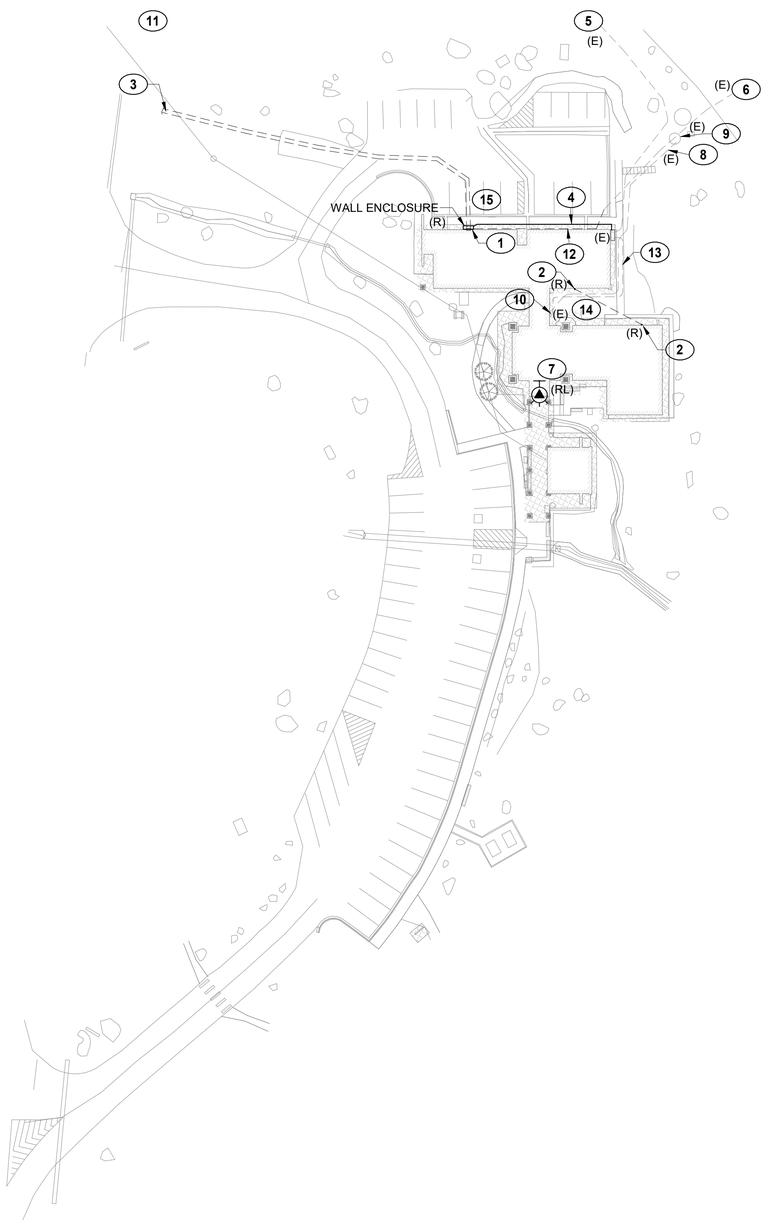

1 TD100 TECH - DEMOLITION PLAN - SITE PLAN

SCALE (A)

KEYNOTE LEGEND

KEY VALUE	KEYNOTE TEXT
1	EXISTING TELECOM BOX SURFACE MOUNTED TO SIDE OF BUILDING. BOX AND CONDUIT SHALL BE DEMOLISHED. THERE ARE FIVE (5) INCOMING SERVICE CONNECTIONS AT THIS LOCATION, ALL SHALL BE TRACED AND CONFIRMED PRIOR TO ANY WORK. REFER TO OTHER KEYNOTES AND SHEET T002 FOR MORE INFORMATION.
2	EXISTING CONDUIT IS SURFACE MOUNTED ON EACH SIDE OF BUILDING AND ROUTED UNDERGROUND AS INDICATED. AFTER CABLES ARE PULLED BACK (REFER TO DEMOLITION FLOOR/CEILING PLANS) CONDUIT SHALL BE DEMOLISHED. BUILDING SHALL BE PATCHED AND REPAIRED, PENETRATIONS SHALL BE SEALED.
3	APPROXIMATE ROUTE OF INCOMING FIBER CONNECTION FROM GRAND LAKE ENTRANCE STATION AND MAINTENANCE BUILDING. CABLE SHALL BE DEMOLISHED BACK TO EACH BUILDING (ENTRANCE STATION AND MAINTENANCE BUILDING). COORDINATE WITH REHABILITATION PLAN, BACKBONE SCHEDULE, AND CONTRACTING OFFICER FOR ROUTING AND CONNECTION OF NEW CABLE TO MINIMIZE DOWNTIME.
4	INCOMING CATV SERVICE CABLE IS ROUTED FROM EXTERIOR WALL MOUNTED ENCLOSURE ALONG THE UNDERSIDE OF ROOF LINE. THE WALL MOUNTED ENCLOSURE IS EXISTING TO REMAIN. THE CABLE SHALL BE PULLED BACK AND ROUTED TO NEW IT ROOM LOCATION. REFER TO SHEET T002. THE OTHER CABLES ROUTED IN ROOF UNDERHANG ADJACENT TO COAXIAL CABLE SHALL BE DEMOLISHED TO ORIGIN. TRACE CABLES PRIOR TO DEMOLITION TO VERIFY CONNECTIONS. (EXISTING CONNECTIONS ARE FOR GROUNDING AND VOICE CONNECTION)
5	EXISTING INCOMING COAXIAL CABLE BASED SERVICE FROM INTERNET SERVICE PROVIDER (ISP). CONTRACTOR SHALL PROTECT IN PLACE THE CABLE ROUTE TO THE SIDE OF BUILDING. REFER TO KEYNOTE 4 AND THE REHABILITATION PLAN FOR MORE INFORMATION.
6	EXISTING SECONDARY PEDESTAL, CONDUIT, AND INCOMING COPPER PAIR CABLE FROM INTERNET SERVICE PROVIDER (ISP). PEDESTAL, PATHWAY, AND CABLING SHALL BE EXISTING TO REMAIN, AND SHALL BE PROTECTED IN PLACE.
7	EXISTING EXTERIOR WAP LOCATED HERE SHALL BE RELOCATED. REF T303 FOR PLACEMENT. AFTER EXISTING WAP IS REMOVED, CONTRACTOR SHALL REPAIR ANY DAMAGE, HOLES, AND/OR PENETRATIONS FROM PREVIOUS MOUNTING. ALL CONDUIT BACK BOXES, AND CABLING SHALL BE REMOVED. IF BACKBOX IS ABLE TO BE REUSED, RELOCATE WITH WAP. APPROVAL FROM CONTRACTING OFFICER IS REQUIRED FOR ANY REPAIR TO THE HISTORIC WOOD CEILING/STRUCTURE.
8	EXISTING UNDERGROUND UTILITY LINES AND CONNECTION TO WEATHER EQUIPMENT. CONTRACTOR SHALL LOCATE CABLE TO THE WEATHER STATION ON SITE AS A FIRST PRIORITY AND SHALL PROTECT THROUGHOUT CONSTRUCTION. CABLE CONNECTION TO WEATHER STATION SHALL NOT HAVE ANY DOWNTIME UNLESS SPECIFICALLY COORDINATED WITH CONTRACTING OFFICER.
9	EXISTING WEATHER EQUIPMENT SHALL BE PROTECTED AND MAINTAINED.
10	INCOMING WEATHER STATION CABLING ENTERS THE BUILDING AT THIS LOCATION. CABLING IS UNPROTECTED AND DIRECTLY BURIED. CABLE SHALL BE PROTECTED IN PLACE UNTIL NEW CABLE IS DEPLOYED, REFER TO SHEET T002.
11	SITE INCOMING SERVICE PEDESTAL LOCATIONS. AN EXISTING COAXIAL PEDESTAL AND AN EXISTING COPPER PEDESTAL ARE NEAR THE ROAD AT APPROXIMATELY THIS LOCATION. BOTH CABLES ROUTE TO BUILDING ALONG THE ROUTES AS INDICATED BY KEYNOTES 5 AND 6.
12	APPROXIMATE PATH OF INCOMING COPPER SERVICE ROUTED TO WALL MOUNTED PANEL. IT IS OBSERVED THAT THERE ARE TWO (2) INCOMING COPPER SERVICES; AN ABANDONED SERVICE INTO THE MECHANICAL SPACE (115) AND AN ACTIVE SERVICE INTO THE OFFICE (110). THE ACTIVE SERVICE CABLE SHALL BE PULLED BACK AND ROUTED TO SERVER ROOM 116. THE INACTIVE SERVICE SHALL BE PULLED BACK TO PEDESTAL AND COILED FOR SERVICE PROVIDER. COORDINATION WITH SERVICE PROVIDER IS REQUIRED FOR SCOPE OF WORK.
13	EXISTING DIRECT BURY COAXIAL CABLE. CABLE SHALL BE DEMOLISHED BACK TO ORIGIN. CABLE ROUTES AS INDICATED, THEN ROUTES UP WALL, PENETRATES INTO BUILDING, AND ROUTES TO THE FRONT DESK INTO AN EXISTING SERVICE PROVIDER WIRELESS ACCESS POINT (WAP). WAP SHALL BE RETURNED TO CONTRACTING OFFICER.
14	THERE ARE EXTERIOR VOICE CABLES ROUTED ON UNDERSIDE OF ROOF OVERHANG IN THE APPROXIMATE LOCATION INDICATED. CABLES SHALL BE DEMOLISHED BACK TO ORIGIN, REFER TO OTHER KEY NOTES AND REHABILITATION DRAWINGS FOR SPECIFIC REFERENCES TO OTHER CABLES IN THE VICINITY.

TECHNOLOGY GENERAL NOTES

A.	CONTRACTOR SHALL REFER TO LEGEND, NOTES, SCHEDULES, DETAILS, AND SPECIFICATIONS FOR MORE INFORMATION.
B.	VERIFY ALL EXISTING CONDITIONS PRIOR RO BEGINNING WORK. BRING ANY DISCREPANCIES FROM THE DRAWINGS AND NOTES TO THE CONTRACTING OFFICER IMMEDIATELY.
C.	ALL WORK MUST BE COORDINATED AND SCHEDULED WITH THE CONTRACTING OFFICER AND OCCUPANTS OF THIS BUILDING SO AS TO PROVIDE THE LEAST AMOUNT OF DISRUPTION OF BUILDING ACTIVITIES AS POSSIBLE.
D.	CONTRACTOR IS RESPONSIBLE FOR IDENTIFYING ITEMS TO BE RETURNED TO THE CONTRACTING OFFICER FOR REUSE. REUSABLE ITEMS DAMAGED OR DISCARDED SHALL BE REPLACED AT NO ADDITIONAL COST TO THE CONTRACTING OFFICER.
E.	ALL EXISTING LOW VOLTAGE (NETWORK, VOICE, COAX, SECURITY, AUDIO VIDEO) CABLING IS SURFACE ROUTED AND MOUNTED. ALL EXISTING LOW VOLTAGE CABLING AND PATHWAY SHALL BE DEMOLISHED, WITH EXCEPTION TO ANY ITEMS SPECIFICALLY NOTED TO BE PROTECTED IN PLACE OR RELOCATED.

DEMOLITION LEGEND

———	OUTLETS, DEVICES, EQUIPMENT, ELEMENTS AND ANY OTHER ITEMS SHOWN IN GREY SHALL BE CONSIDERED OUTSIDE THIS SCOPE OF WORK. ITEMS SHALL BE CONSIDERED AS EXISTING TO REMAIN.
———	OUTLETS, DEVICES, EQUIPMENT, ELEMENTS AND ANY OTHER ITEMS SHOWN IN BLACK SHALL BE CONSIDERED WITHIN THIS SCOPE OF WORK. ITEMS SHALL BE CONSIDERED AS SCHEDULED FOR DEMOLITION OR SCHEDULED FOR RELOCATION.

KEYNOTE LEGEND

KEY VALUE	KEYNOTE TEXT
15	PHASED CONSTRUCTION AND COORDINATION: THERE ARE MULTIPLE SITES (ENTRANCE STATION AND MAINTENANCE BUILDING) WITH NETWORK CONNECTIVITY DEPENDENT ON THE VISITOR CENTER'S NETWORK CONNECTION. CONTRACTOR SHALL COORDINATE WITH CONTRACTING OFFICER AND REFER TO THE DEMOLITION AND REHABILITATION DRAWINGS HEREIN FOR THE DEVELOPMENT OF A CONSTRUCTION PHASING STRATEGY THAT MIGRATES THE INCOMING SERVICE CONNECTION AND CONNECTION TO OTHER SITES WITH MINIMAL DOWNTIME. CONTRACTOR AND CONTRACTING OFFICER SHALL COORDINATE CONSTRUCTION SCHEDULE WITH I) THE SERVICE PROVIDERS CABLE RELOCATION SCHEDULE, II) THE INSTALLATION AND CONNECTION OF ALL EXTERIOR CONDUIT AND FIBER CONNECTIONS TO OTHER SITES, AND III) THE BUILDOUT OF THE NEW SERVER ROOM. THE EXISTING SERVER ROOM AND EQUIPMENT SHALL BE PROTECTED IN PLACE THROUGHOUT CONSTRUCTION UNTIL I) THE NEW SERVER ROOM IS BUILT OUT AND ABLE TO PROTECT/SUPPORT IT EQUIPMENT, II) ALL CONNECTIONS TO OTHER SITES ARE TESTED AND VERIFIED, AND III) ALL SERVICE PROVIDER CABLING HAS BEEN MIGRATED TO BE DEMARCATED IN THE NEW SERVER ROOM. THE EXISTING FIBER ROUTES TO OTHER SITES SHALL BE PROTECTED IN PLACE UNTIL THE NEW FIBER AND CONDUIT PATHS ARE IN PLACE AND PREPPED FOR TRANSITION. DOWNTIME IS EXPECTED AT THE VISITOR CENTER DUE TO CONNECTING NEW CONDUIT TO EXISTING CONDUIT. CONTRACTOR SHALL INSTALL CONDUIT FROM SERVER ROOM TO CONDUIT JUNCTION POINT AND COORDINATE NEW CABLE PULL SO AS TO MINIMIZE DOWNTIME FROM THE REMOVAL OF EXISTING FIBER TO THE ACTIVATION OF NEW FIBER.

SCALE: (A) 40 0 40 80 SCALE OF FEET

TRUE PLAN

COLORADO REGISTERED PROFESSIONAL ENGINEER 35717 01/08/2026

AE FIRM PRIME: OTAK, INC. REDMOND, WA SUBCONTRACTOR: AE DESIGN DENVER, CO	DESIGNED: AE DESIGN CADD TW/RS/BJLV TECH REVIEW: JM/JEB/MS DATE: 01/16/2026	SUB SHEET NO. TD100	TITLE OF SHEET TECHNOLOGY SITE DEMOLITION PLAN REHABILITATE KAWUNEECHE VISITOR CENTER ROCKY MOUNTAIN NATIONAL PARK

DRAWING NO. 121 165639

PMIS/PKG NO. 326235

SHEET 142 OF 177

REHABILITATION LEGEND

———	OUTLETS, DEVICES, EQUIPMENT, ELEMENTS AND ANY OTHER ITEMS SHOWN IN GREY SHALL BE CONSIDERED OUTSIDE THIS SCOPE OF WORK. ITEMS SHALL BE CONSIDERED AS EXISTING TO REMAIN
———	OUTLETS, DEVICES, EQUIPMENT, ELEMENTS AND ANY OTHER ITEMS SHOWN IN BLACK SHALL BE CONSIDERED WITHIN THIS SCOPE OF WORK. ITEMS SHALL BE CONSIDERED AS NEW, REFER TO RESPONSIBILITY MATRIX FOR MORE INFORMATION.

TECHNOLOGY GENERAL NOTES

A.	CONTRACTOR SHALL REFER TO LEGEND, NOTES, SCHEDULES, DETAILS, AND SPECIFICATIONS FOR MORE INFORMATION.
B.	SITE CONDITIONS INDICATED ARE BASED ON LIMITED SITE INVESTIGATION AND DRAWING REFERENCES. CONTRACTOR SHALL VERIFY AND RECORD EXISTING CONDITIONS PRIOR TO COMMENCEMENT OF WORK.
C.	DEVICES AND PATHWAY SHOWN ARE DIAGRAMMATIC IN NATURE AND DO NOT REPRESENT PRECISE LOCATIONS. CONTRACTOR SHALL FIELD COORDINATE DEVICES AND PATHWAYS WITH OTHER UTILITIES AND SERVICES, CIVIL, STRUCTURAL, ARCHITECTURAL, AND CONTRACTING OFFICER.
D.	ANY BURIED CONDUIT SHALL BE COORDINATED SPECIFICALLY TO AVOID BUILDING FOOTINGS AND OTHER STRUCTURAL ELEMENTS.
E.	NO MORE THAN 500 FEET OF PATHWAY MAY BE INSTALLED BETWEEN PULL POINTS.
F.	NO MORE THAN TWO (2) 90-DEGREE BENDS (OR 180 DEGREE OF BENDS IN TOTAL) MAY BE INSTALLED BETWEEN PULL POINTS. THE ONLY EXCEPTION IS TO ALLOW THE STUB INTO THE DEMARC SPACE TO BE THE THIRD 90-DEGREE BEND BETWEEN PULL POINTS.
G.	ALL CONDUIT BENDS SHALL BE THE "SWEEPING" TYPE AND IN ACCORDANCE WITH THE BEND RADIUS REQUIREMENTS SPECIFIED IN PROJECT GENERAL NOTES. NO "BEND" OR "ELBOW" FITTINGS ARE PERMITTED UNLESS SPECIFICALLY NOTED.
H.	CONTRACTOR SHALL REPAIR ANY DAMAGES TO WALLS/CEILING THAT OCCUR DURING THE DEMOLITION OF EXISTING TELECOM OUTLET DEVICES.
I.	ANTICIPATE AREA OF DISTURBANCE AROUND THE RED LINES TO BE 5 FEET FROM CENTER OF TRENCH. THE TRENCH SIZE AND TRENCHING DISTURBANCE SHALL BE MINIMIZED TO PROTECT TREES.

KEYNOTE LEGEND

KEY VALUE	KEYNOTE TEXT
1	EXISTING SECONDARY PEDESTAL, CONDUIT, AND INCOMING COPPER PAIR CABLE FROM INTERNET SERVICE PROVIDER (ISP). PEDESTAL, PATHWAY, AND CABLING SHALL BE EXISTING TO REMAIN, AND SHALL BE PROTECTED IN PLACE. WHERE THE NEW CONDUIT IS SHOWN ALONG PATH, CABLE SHALL BE REROUTED INTO CONDUIT AND ROUTED INTO BUILDING. CONDUIT SHALL EXTEND TO FURTHEST POINT AVAILABLE FROM BUILDING, ALONG EXISTING CABLE ROUTE, WITHOUT DISTURBING EXISTING EQUIPMENT OR LANDSCAPING OUTSIDE THE AREA OF DISTURBANCE.
2	CONDUIT AND CABLE SHALL ROUTE TO THE MAINTENANCE BUILDING. COORDINATE NEW ROUTE WITH EXISTING PENETRATIONS, HANDHOLES, AND ROUTE TO THE MAINTENANCE BUILDING. REFER TO VIEWPORT 2 ON THIS SHEET.
3	CONDUIT AND CABLE SHALL ROUTE TO THE GRAND LAKE ENTRANCE STATION. COORDINATE NEW ROUTE WITH EXISTING PENETRATIONS, HANDHOLES, AND ROUTE TO THE ENTRANCE STATION. REFER TO VIEWPORT 2 ON THIS SHEET.
4	EXISTING INCOMING COAXIAL CABLE BASED SERVICE FROM INTERNET SERVICE PROVIDER (ISP). CONTRACTOR SHALL PROTECT IN PLACE THE INCOMING SERVICE TO THE SIDE OF BUILDING.
5	EXISTING UNDERGROUND UTILITY LINES AND CONNECTION TO WEATHER EQUIPMENT. CONTRACTOR SHALL LOCATE CABLE TO THE WEATHER STATION ON SITE AS A FIRST PRIORITY AND SHALL PROTECT THROUGHOUT CONSTRUCTION. CABLE CONNECTION TO WEATHER STATION SHALL NOT HAVE ANY DOWNTIME UNLESS SPECIFICALLY COORDINATED WITH CONTRACTING OFFICER.
6	EXISTING WEATHER EQUIPMENT SHALL BE PROTECTED AND MAINTAINED.
7	INCOMING CATV CABLING FROM WALL UNIT SHALL ROUTE THROUGH CONDUIT INDICATED AND INTO SERVER ROOM 116. ALL CATV HEADEND EQUIPMENT THAT IS EXISTING IN THE BUILDING SHALL BE RELOCATED TO SERVER ROOM 116.
8	CONTRACTOR SHALL PROTECT THE EXISTING INCOMING WEATHER SERVICE CABLE. ANY DOWNTIME REQUIRED SHALL BE COORDINATED DIRECTLY WITH THE CONTRACTING OFFICER, WRITTEN APPROVAL IS REQUIRED FOR ANY DOWNTIME.
9	THE BELOW SUPPORTS A TRANSITIONAL AND LONG TERM SOLUTION TO PROTECT AND PRESERVE THE FUNCTION OF THE WEATHER STATION AND ITS REPORTING REQUIREMENTS: CONTRACTOR SHALL REFER TO DEMOLITION PLAN WHERE LOCATING OF THE EXISTING CABLE IS REQUIRED. REFERRING TO THE DEFINED LOCATION IS INTEGRAL TO PROTECTING THE CABLE DURING TRANSITION. PRIOR TO ANY DIGGING/TRENCHING, A CABLE AND CONDUIT SHALL ROUTE FROM THE WEATHER STATION TO THE WEATHER STATION END DEVICE (AS INDICATED BY THE BLACK DASHED LINE). INSIDE THE BUILDING. CONDUIT SHALL PENETRATE INTO WALL OF BUILDING AT LOCATION INDICATED. COORDINATE WITH CONTRACTING OFFICER PRIOR TO PENETRATION. COORDINATE WITH EXISTING CABLE TO MATCH NEW CABLE (BASED ON FIELD INVESTIGATION, UTILIZE AN 18 AWG, 2 CONDUCTOR CABLE). SEE KEYNOTE #11 FOR CONDUIT ROUTING INFORMATION. AFTER CONDUIT IS INSTALLED, THE NEW CABLE SHALL ROUTE INTO CONDUIT AND BE STAGED FOR TRANSITION. THROUGH COORDINATION WITH CONTRACTING OFFICER, AND WITH MINIMAL DOWNTIME, THE EXISTING WEATHER STATION CABLING SHALL BE DISCONNECTED AT BOTH ENDS AND THE NEW CABLE SHALL BE CONNECTED AT BOTH ENDS. CONTRACTOR SHALL VALIDATE FUNCTION OF WEATHER STATION AND END DEVICE WITH END USER, ADJUST AS NEEDED TO ENSURE SYSTEM ACTIVATION.
10	EXISTING CATV JUNCTION BOX.
11	BOTH CONDUIT PATHWAY'S FINAL ROUTING THROUGH THE COURTYARD SHALL BE FIELD COORDINATED WITH CONTRACTING OFFICER TO NOT IMPACT TREE ROOTS, VEGETATION, EXISTING UTILITY OR DISTRIBUTION CABLING/CONDUIT, ETC. THE CONDUITS SHALL ROUTE FROM THE HANDHOLE AND PENETRATE INTO BUILDING AT AREA INDICATED.
12	EXISTING FIBER CABLE ROUTED IN CONDUIT (INDICATED BY ORANGE LINE) BETWEEN THE GRAND LAKE ENTRANCE (GLE) AND THE KAWUNEECHE VISITOR CENTER (KVC). EXISTING DIRECT BURY FIBER (INDICATED BY RED LINE). THE EXISTING FIBER BETWEEN GLE AND KVC IS TO BE DEMOLISHED (REFER TO TD002), THE CONTRACTOR SHALL PROVIDE AND INSTALL A NEW CONDUIT PATHWAY FROM THE KVC TO MEET THE EXISTING CONDUIT PATHWAY FED FROM GLE. THE LOCATION INDICATED IS APPROXIMATED AND SHALL BE FIELD VERIFIED BY CONTRACTOR PRIOR TO COMMENCING WORK. THE DIRECT BURY PATH (INDICATED BY RED LINE) IS THE APPROXIMATE PATH AND LENGTH OF CONDUIT REQUIRED, APPROXIMATELY 200 FEET OF NEW CONDUIT PATH REQUIRED. NEW CABLING SHALL UTILIZE THE EXISTING AND NEW PATHWAYS, REFER TO BACKBONE SCHEDULE.
13	HANDHOLE SHALL BE LOCATED IN THE LANDSCAPE ON THE NORTHEAST SIDE OF WALKWAY INTERSECTION. CONDUITS SHALL ROUTE UNDER THE LANDSCAPE WHILE HEADING EAST AND WHEN TURNING TO ROUTE SOUTH, SHALL ROUTE UNDER WALKWAY FOR AS MUCH OF ROUTE AS POSSIBLE TO MINIMIZE LANDSCAPE DISTURBANCE. FIELD COORDINATE WITH CONTRACTING OFFICER FOR FINAL ROUTE.
14	REFER TO SHEET T101 FOR MORE DETAILED INFORMATION ABOUT ROUTE.
15	LOCATION INDICATED IS APPROXIMATE BASED ON SITE INVESTIGATION AND THE EXISTING CONDITION OF LANDSCAPE. CONTRACTOR SHALL COORDINATE WITH THE CONTRACTING OFFICER PRIOR TO INSTALL AND WITH EXISTING CONDUIT/CABLING FOR INSTALLED LOCATION OF HANDHOLE.

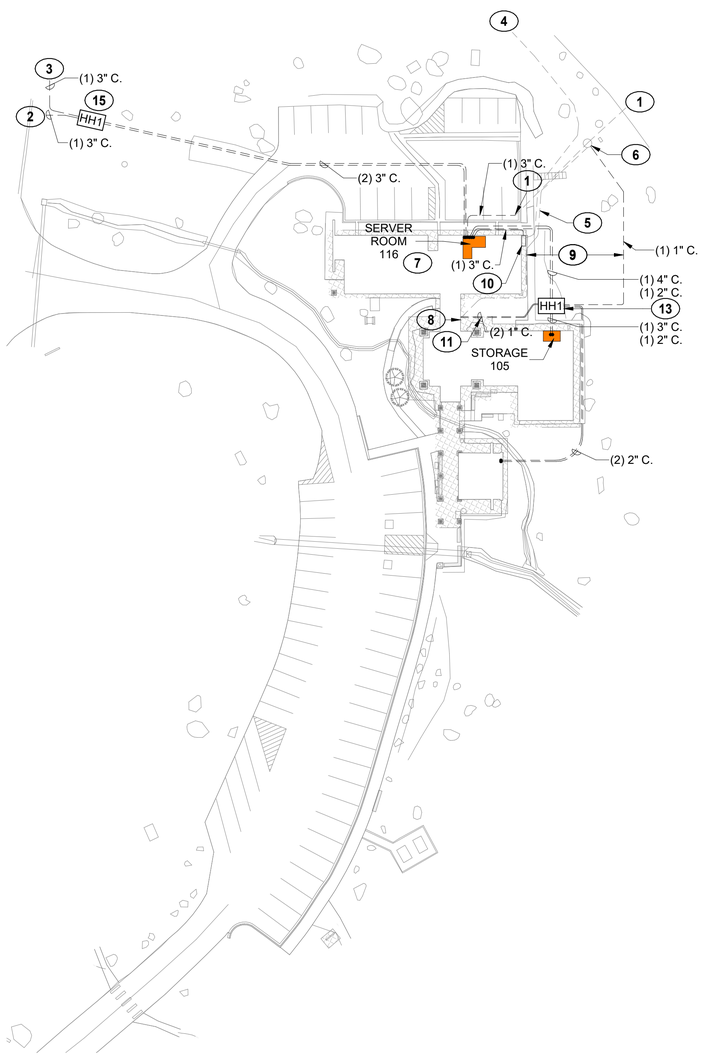

1 T100 TECHNOLOGY SITE PLAN
SCALE A

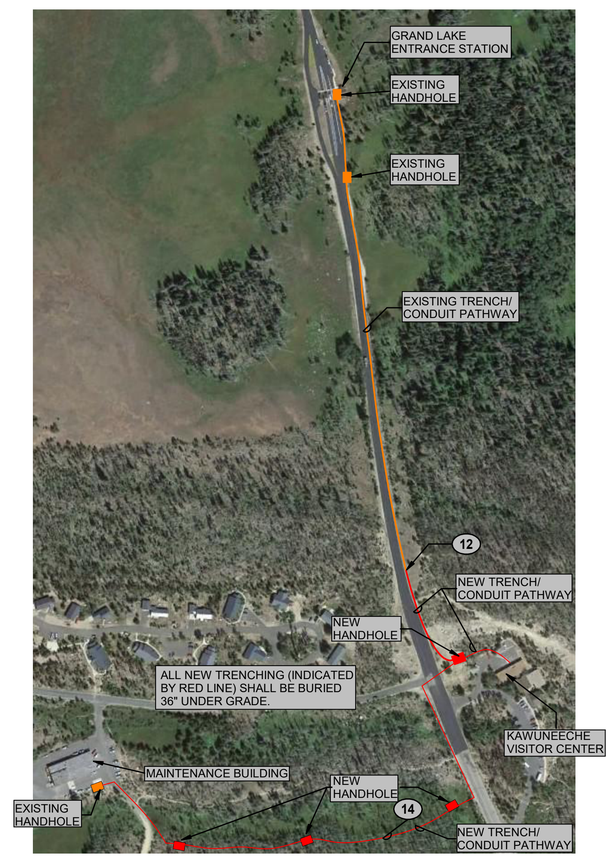

2 T100 OVERALL INFASTRUCTURE SITE PLAN
NTS

SCALE: A 40 0 40 80 SCALE OF FEET

TRUE PLAN

COLORADO REGISTERED PROFESSIONAL ENGINEER 35717 03/20/2026

AE FIRM	DESIGNED:	SUB SHEET NO.	TITLE OF SHEET	DRAWING NO.
PRIME: OTAK, INC. REDMOND, WA SUBCONTRACTOR: AE DESIGN DENVER, CO	AE DESIGN CADD TW/RS/BJLV TECH REVIEW: JM/JEB/MS DATE: 01/16/2026	T100	TECHNOLOGY SITE PLAN REHABILITATE KAWUNEECHE VISITOR CENTER ROCKY MOUNTAIN NATIONAL PARK	121 165639 PMIS/PKG NO. 326235 SHEET 143 OF 177

3/20/2026 11:42:31 AM Autodesk Docs://2024-260 NPS ROMO Kawuneeche VC DD-CA wOtak/NPS ROMO KAWUEECHE VISITOR CENTER - ELECTRICAL.rvt

Autodesk Docs://2024-260 NPS ROMO Kawuneeche VC DD-CA wOtak/NPS ROMO KAWUEECHE VISITOR CENTER - ELECTRICAL.rvt
3/30/2026 5:43:26 PM

KEYNOTE LEGEND

KEY VALUE	KEYNOTE TEXT
1	THE SOLID RED LINE INDICATES WHERE THE CONTRACTOR SHALL PROVIDE AND INSTALL A CONDUIT VIA TRENCHING. THE ROUTE SHOWN IS IN EFFORT TO REDUCE THE AMOUNT OF DISTURBANCE TO TREES AND LARGE BOULDERS. CONTRACTOR SHALL FIELD COORDINATE WITH THE CONTRACTING OFFICER FOR THE OPTIMAL ROUTE PRIOR TO INSTALL.
2	THE DASHED RED LINE INDICATES WHERE THE CONTRACTOR SHALL PROVIDE AND INSTALL A CONDUIT VIA UNDERGROUND BORING. CONTRACTOR SHALL FIELD COORDINATE WITH THE CONTRACTING OFFICER FOR THE OPTIMAL ROUTE PRIOR TO INSTALL.
3	THE SCOPE OF WORK SHOWN EAST OF HIGHWAY 34 (THE VISITOR CENTER AREA) IS APPROXIMATE, CONTRACTOR SHALL REFER TO SHEET T100 FOR THE DETAILED SCOPE OF WORK FOR THIS AREA.
4	TRENCH AND CONDUIT SHALL BE INSTALLED IN ROAD TO AVOID ANY EXISTING UTILITIES. ADJACENT WETLAND AREA SHALL NOT BE IMPACTED. FINAL LOCATION OF TRENCH AND CONDUIT SHALL BE COORDINATED AND APPROVED WITH THE CONTRACTING OFFICER.
5	GENERAL CONTRACTOR SHALL CONFIRM WETLAND BOUNDARIES AND ENSURE WORK AREA IS OUTSIDE OF CONFIRMED BOUNDARIES. FINAL LOCATION OF TRENCH, CONDUIT, AND HANDHOLES SHALL BE COORDINATED AND APPROVED WITH THE CONTRACTING OFFICER.
6	TRENCH AND CONDUIT SHALL BE INSTALLED ALONG THE ROAD SHOULDER. CONTRACTOR SHALL TAKE STEPS TO AVOID ROAD SIGNS. ANY ROAD SIGNS THAT ARE IMPACTED SHALL BE REMOVED AND REPLACED AT COMPLETION OF WORK. FINAL LOCATION OF TRENCH, CONDUIT, AND HANDHOLES SHALL BE COORDINATED AND APPROVED WITH THE CONTRACTING OFFICER.
7	THE GREEN LINE REPRESENTS THE APPROXIMATE BOUNDARY FOR THE ROUTE. THE ROUTE SHALL REMAIN 100-FEET OR MORE FROM THE PATH AT ALL TIMES. VARIANCE IN THE ROUTE BETWEEN THE PATH AND THE BOUNDARY IS ACCEPTABLE AND SHALL BE FIELD COORDINATED WITH THE CONTRACTING OFFICER PRIOR TO INSTALLATION. NO ROUTE SHALL CROSS THE PATH TO THE NORTH AT ANY TIME.
8	ITEMS IN ORANGE ARE EXISTING TO REMAIN.

1 T101 ENLARGED INFASTRUCTURE SITE PLAN
SCALE (A)

TECHNOLOGY GENERAL NOTES

A.	CONTRACTOR SHALL REFER TO LEGEND, NOTES, SCHEDULES, DETAILS, AND SPECIFICATIONS FOR MORE INFORMATION.
B.	SITE CONDITIONS INDICATED ARE BASED ON LIMITED SITE INVESTIGATION AND DRAWING REFERENCES. CONTRACTOR SHALL VERIFY AND RECORD EXISTING CONDITIONS PRIOR TO COMMENCEMENT OF WORK.
C.	DEVICES AND PATHWAY SHOWN ARE DIAGRAMMATIC IN NATURE AND DO NOT REPRESENT PRECISE LOCATIONS. CONTRACTOR SHALL FIELD COORDINATE DEVICES AND PATHWAYS WITH OTHER UTILITIES AND SERVICES, CIVIL, STRUCTURAL, ARCHITECTURAL, AND CONTRACTING OFFICER.
D.	ANY BURIED CONDUIT SHALL BE COORDINATED SPECIFICALLY TO AVOID BUILDING FOOTINGS AND OTHER STRUCTURAL ELEMENTS.
E.	NO MORE THAN 500 FEET OF PATHWAY MAY BE INSTALLED BETWEEN PULL POINTS.
F.	NO MORE THAN TWO (2) 90-DEGREE BENDS (OR 180 DEGREE OF BENDS IN TOTAL) MAY BE INSTALLED BETWEEN PULL POINTS. THE ONLY EXCEPTION IS TO ALLOW THE STUB INTO THE DEMARC SPACE TO BE THE THIRD 90-DEGREE BEND BETWEEN PULL POINTS.
G.	ALL CONDUIT BENDS SHALL BE THE "SWEEPING" TYPE AND IN ACCORDANCE WITH THE BEND RADIUS REQUIREMENTS SPECIFIED IN PROJECT GENERAL NOTES. NO "BEND" OR "ELBOW" FITTINGS ARE PERMITTED UNLESS SPECIFICALLY NOTED.
H.	CONTRACTOR SHALL REPAIR ANY DAMAGES TO WALLS/CEILING THAT OCCUR DURING THE DEMOLITION OF EXISTING TELECOM OUTLET DEVICES.
I.	ANTICIPATE AREA OF DISTURBANCE AROUND THE RED LINES TO BE 5 FEET FROM CENTER OF TRENCH. THE TRENCH SIZE AND TRENCHING DISTURBANCE SHALL BE MINIMIZED TO PROTECT TREES.

SCALE: (A) 80 0 80 160 SCALE OF FEET
TRUE PLAN

COLORADO REGISTERED JOHN BROOKS 35717 03/30/2026 PROFESSIONAL ENGINEER

AE FIRM PRIME: OTAK, INC. REDMOND, WA SUBCONTRACTOR: AE DESIGN DENVER, CO	DESIGNED: AE DESIGN CADD TW/RS/BJLV TECH REVIEW: JM/JEB/MS DATE: 01/16/2026	SUB SHEET NO. T101	TITLE OF SHEET TECHNOLOGY SITE PLAN ENLARGED REHABILITATE KAWUNEECHE VISITOR CENTER ROCKY MOUNTAIN NATIONAL PARK

DRAWING NO. 121 165639
PMIS/PKG NO. 326235
SHEET 144 OF 177

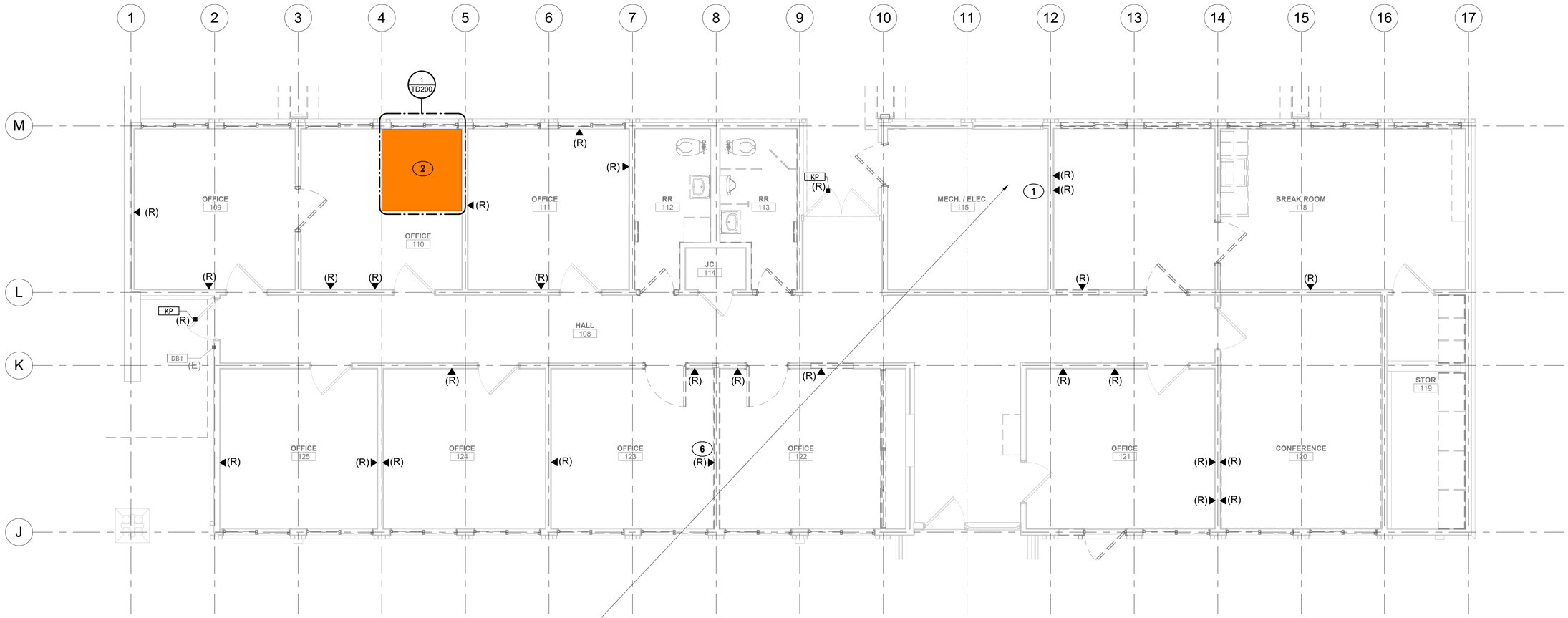

1 TD102 TECHNOLOGY FIRST FLOOR DEMOLITION - ADMIN WING

SCALE B

*NOTE: THE EQUIPMENT INDICATED ARE ASSUMPTIONS OF EQUIPMENT ONLY AND FUNCTIONALITY ONLY. THE CONTRACTOR SHALL FIELD VERIFY THE USE OF ALL EQUIPMENT AND CABLING.

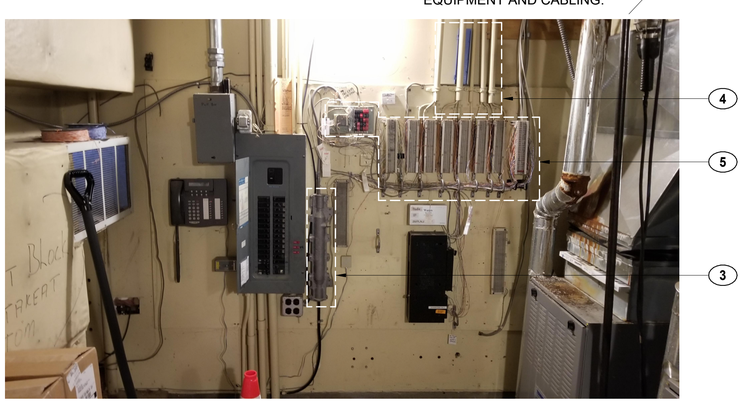

2 TD102 INCOMING COPPER SERVICE

KEYNOTE LEGEND

KEY VALUE	KEYNOTE TEXT
1	REFER TO DETAIL #2/TD102 FOR EXISTING AND NEW COPPER INCOMING SERVICE COORDINATION.
2	EXISTING IDF/SERVER ROOM.
3	EXISTING INCOMING SERVICE SPLICE POINT / DEMARC. CONTRACTOR SHALL CONFIRM SERVICE IS DEACTIVATED AND DEMOLISH THE INCOMING SERVICE AND DEMARC LOCATION.
4	EXISTING ANALOG CABLE DISTRIBUTION, 400 CABLING CONNECTIONS. CONTRACTOR SHALL TEST AND VERIFY FOR ACTIVE AND DEACTIVATED CONNECTIONS. CONTRACTOR SHALL ASSUME 5% OF CONNECTIONS ARE ACTIVE. FOR ALL ACTIVE CONNECTIONS, CONTRACTOR SHALL PROTECT IN PLACE UNTIL DEMARCATION/INCOMING SERVICE IS RELOCATED. ALL CABLING SHALL BE DEMOLISHED AFTER SERVICE RELOCATION.
5	EXISTING ANALOG INCOMING SERVICE PATCH BLOCK, DISTRIBUTION BLOCKS, AND SURGE PROTECTION PANEL. THE SURGE PROTECTION PANEL (INCOMING SERVICE) IS NOT ACTIVE, ALONG WITH ITS CONNECTIONS, AND IT SHALL BE DEMOLISHED. REFER TO KEYNOTE 4 (SHEET TD102) AND SHEET TD200 FOR EXISTING SERVICE AND DISTRIBUTION INFORMATION. ACTIVE CABLING FROM ACTIVE SERVICE (IN OFFICE 110) AND ACTIVE DISTRIBUTION CABLING (20 CONNECTIONS) SHALL REMAIN ACTIVE UNTIL ACTIVE SERVICE IS RELOCATED. ALL CABLING AND CONNECTION BLOCKS SHALL BE DEMOLISHED AFTER SERVICE RELOCATION.
6	CONTRACTOR SHALL DEMOLISH PUNCH BLOCK/LOW VOLTAGE EQUIPMENT IN OFFICE 123.

TECHNOLOGY GENERAL NOTES

A.	CONTRACTOR SHALL REFER TO LEGEND, NOTES, SCHEDULES, DETAILS, AND SPECIFICATIONS FOR MORE INFORMATION.
B.	VERIFY ALL EXISTING CONDITIONS PRIOR RO BEGINNING WORK. BRING ANY DISCREPANCIES FROM THE DRAWINGS AND NOTES TO THE CONTRACTING OFFICER IMMEDIATELY.
C.	ALL WORK MUST BE COORDINATED AND SCHEDULED WITH THE CONTRACTING OFFICER AND OCCUPANTS OF THIS BUILDING SO AS TO PROVIDE THE LEAST AMOUNT OF DISRUPTION OF BUILDING ACTIVITIES AS POSSIBLE.
D.	CONTRACTOR IS RESPONSIBLE FOR IDENTIFYING ITEMS TO BE RETURNED TO THE CONTRACTING OFFICER FOR REUSE. REUSABLE ITEMS DAMAGED OR DISCARDED SHALL BE REPLACED AT NO ADDITIONAL COST TO THE CONTRACTING OFFICER.
E.	ALL EXISTING LOW VOLTAGE (NETWORK, VOICE, COAX, SECURITY, AUDIO VIDEO) CABLING IS SURFACE ROUTED AND MOUNTED. ALL EXISTING LOW VOLTAGE CABLING AND PATHWAY SHALL BE DEMOLISHED, WITH EXCEPTION TO ANY ITEMS SPECIFICALLY NOTED TO BE PROTECTED IN PLACE OR RELOCATED.

DEMOLITION LEGEND

———	OUTLETS, DEVICES, EQUIPMENT, ELEMENTS AND ANY OTHER ITEMS SHOWN IN GREY SHALL BE CONSIDERED OUTSIDE THIS SCOPE OF WORK. ITEMS SHALL BE CONSIDERED AS EXISTING TO REMAIN.
———	OUTLETS, DEVICES, EQUIPMENT, ELEMENTS AND ANY OTHER ITEMS SHOWN IN BLACK SHALL BE CONSIDERED WITHIN THIS SCOPE OF WORK. ITEMS SHALL BE CONSIDERED AS SCHEDULED FOR DEMOLITION OR SCHEDULED FOR RELOCATION.

SCALE: B

4 0 4 8
SCALE OF FEET

TRUE PLAN

COLORADO REGISTERED PROFESSIONAL ENGINEER
JOHN BROOKS JEB
35717
03/20/2026

AE FIRM	DESIGNED:	SUB SHEET NO.	TITLE OF SHEET	DRAWING NO.
PRIME: OTAK, INC. REDMOND, WA	AE DESIGN	TD102	TECHNOLOGY DEMOLITION PLAN - ADMIN WING	121 165639
SUBCONTRACTOR: AE DESIGN DENVER, CO	CADD: TW/RS/BJLV		REHABILITATE KAWUNEECHE VISITOR CENTER ROCKY MOUNTAIN NATIONAL PARK	PMIS/PKG NO. 326235
	TECH REVIEW: JM/JEB/MS			SHEET 145 OF 177
	DATE: 01/16/2026			

3/30/2026 10:34:29 AM Autodesk Docs://2024-260 NPS ROMO Kawuneeche VC DD-CA wOtak/NPS ROMO KAWUEECHE VISITOR CENTER - ELECTRICAL.rvt

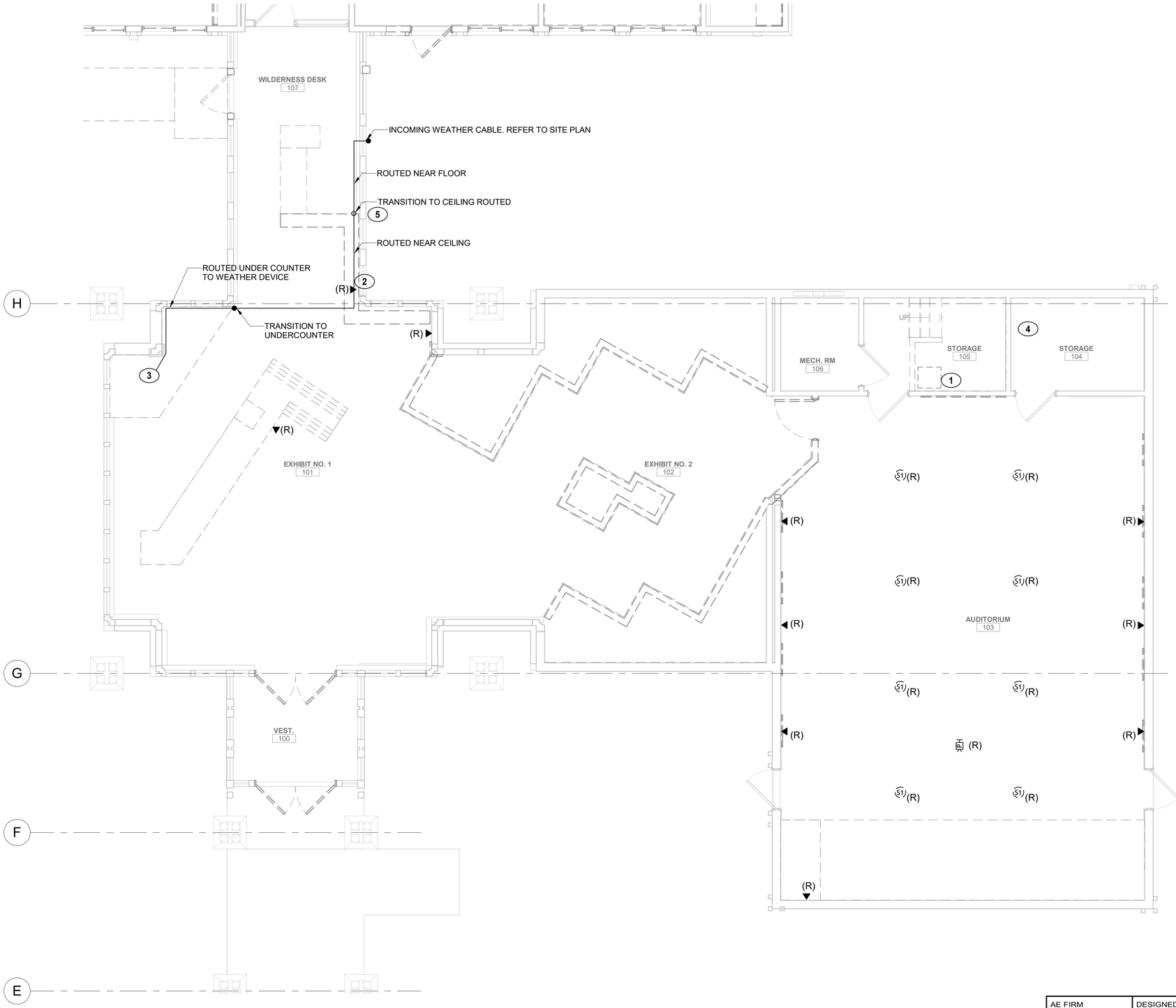

1 TD103 TECHNOLOGY FIRST FLOOR DEMOLITION - LOBBY/AUDITORIUM

SCALE B

TECHNOLOGY GENERAL NOTES

A.	CONTRACTOR SHALL REFER TO LEGEND, NOTES, SCHEDULES, DETAILS, AND SPECIFICATIONS FOR MORE INFORMATION.
B.	VERIFY ALL EXISTING CONDITIONS PRIOR RO BEGINNING WORK. BRING ANY DISCREPANCIES FROM THE DRAWINGS AND NOTES TO THE CONTRACTING OFFICER IMMEDIATELY.
C.	ALL WORK MUST BE COORDINATED AND SCHEDULED WITH THE CONTRACTING OFFICER AND OCCUPANTS OF THIS BUILDING SO AS TO PROVIDE THE LEAST AMOUNT OF DISRUPTION OF BUILDING ACTIVITIES AS POSSIBLE.
D.	CONTRACTOR IS RESPONSIBLE FOR IDENTIFYING ITEMS TO BE RETURNED TO THE CONTRACTING OFFICER FOR REUSE. REUSABLE ITEMS DAMAGED OR DISCARDED SHALL BE REPLACED AT NO ADDITIONAL COST TO THE CONTRACTING OFFICER.
E.	ALL EXISTING LOW VOLTAGE (NETWORK, VOICE, COAX, SECURITY, AUDIO VIDEO) CABLING IS SURFACE ROUTED AND MOUNTED. ALL EXISTING LOW VOLTAGE CABLING AND PATHWAY SHALL BE DEMOLISHED, WITH EXCEPTION TO ANY ITEMS SPECIFICALLY NOTED TO BE PROTECTED IN PLACE OR RELOCATED.

DEMOLITION LEGEND

————	OUTLETS, DEVICES, EQUIPMENT, ELEMENTS AND ANY OTHER ITEMS SHOWN IN GREY SHALL BE CONSIDERED OUTSIDE THIS SCOPE OF WORK. ITEMS SHALL BE CONSIDERED AS EXISTING TO REMAIN.
————	OUTLETS, DEVICES, EQUIPMENT, ELEMENTS AND ANY OTHER ITEMS SHOWN IN BLACK SHALL BE CONSIDERED WITHIN THIS SCOPE OF WORK. ITEMS SHALL BE CONSIDERED AS SCHEDULED FOR DEMOLITION OR SCHEDULED FOR RELOCATION.

KEYNOTE LEGEND

KEY VALUE	KEYNOTE TEXT
1	EXISTING RACK. EQUIPMENT SHALL BE DEMOLISHED AND RETURNED TO CONTRACTING OFFICER. RACK SHALL BE EXISTING TO REMAIN AND SHALL SUPPORT NEW EQUIPMENT.
2	THE WEATHER CABLE ROUTING IS SHOWN HERE. WHILE REMAINING CONNECTED TO END DEVICE, BOTH THE END DEVICE AND CABLING SHALL BE RELOCATED TO WILDERNESS DESK. COORDINATE WITH CONTRACTING OFFICER FOR ANY REQUIRED DOWNTIME AND THE FINAL INSTALLATION LOCATION.
3	WEATHER STATION END DEVICE. RELOCATE AS NOTED IN KEY NOTE 2.
4	CONTRACTOR SHALL DEMOLISH THE PUNCH BLOCKS/LOW VOLTAGE EQUIPMENT IN STORAGE ROOM 104.
5	APPROXIMATE LOCATION OF CATV INCOMING SERVICE. CABLING SHALL BE PULLED BACK TO EXTERIOR WALL MOUNTED DEVICE (REFER TO SHEET TD002) AND DEMOLISHED.

SCALE: B 4 0 4 8 SCALE OF FEET

TRUE PLAN

COLORADO REGISTERED PROFESSIONAL ENGINEER 35717 01/08/2026

AE FIRM PRIME: OTAK, INC. REDMOND, WA SUBCONTRACTOR: AE DESIGN DENVER, CO	DESIGNED: AE DESIGN CADD TW/RS/BJLV TECH REVIEW: JM/JEB/MS DATE: 01/16/2026	SUB SHEET NO. TD103	TITLE OF SHEET TECHNOLOGY DEMOLITION PLAN - LOBBY/AUDITORIUM REHABILITATE KAWUNEECHE VISITOR CENTER ROCKY MOUNTAIN NATIONAL PARK

DRAWING NO. 121 / 165639

PMIS/PKG NO. 326235

SHEET 146 OF 177

1/8/2026 2:58:38 PM Autodesk Docs://2024-260 NPS ROMO Kawuneeche VC DD-CA wOtak/NPS ROMO KAWUEECHE VISITOR CENTER - ELECTRICAL.rvt

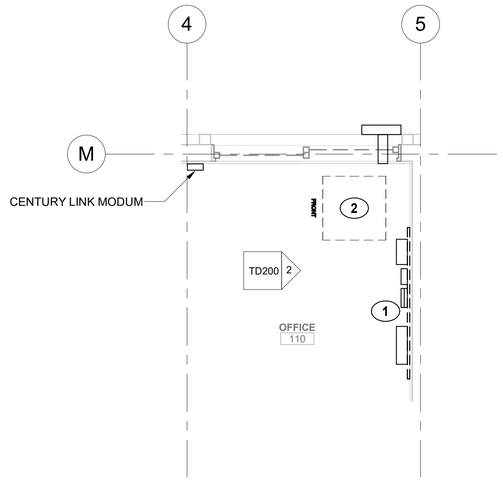

1 TD200 TECHNOLOGY ENLARGED RACK LOCATION DEMOLITION

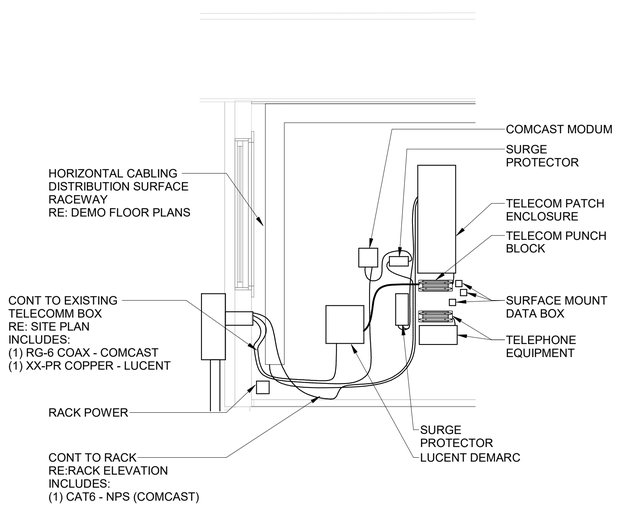

2 TD200 TECHNOLOGY DEMOLITION RACK ELEVATION - EAST

TECHNOLOGY GENERAL NOTES

A.	CONTRACTOR SHALL REFER TO LEGEND, NOTES, SCHEDULES, DETAILS, AND SPECIFICATIONS FOR MORE INFORMATION.
B.	VERIFY ALL EXISTING CONDITIONS PRIOR RO BEGINNING WORK. BRING ANY DISCREPANCIES FROM THE DRAWINGS AND NOTES TO THE CONTRACTING OFFICER IMMEDIATELY.
C.	ALL WORK MUST BE COORDINATED AND SCHEDULED WITH THE CONTRACTING OFFICER AND OCCUPANTS OF THIS BUILDING SO AS TO PROVIDE THE LEAST AMOUNT OF DISRUPTION OF BUILDING ACTIVITIES AS POSSIBLE.
D.	CONTRACTOR IS RESPONSIBLE FOR IDENTIFYING ITEMS TO BE RETURNED TO THE CONTRACTING OFFICER FOR REUSE. REUSABLE ITEMS DAMAGED OR DISCARDED SHALL BE REPLACED AT NO ADDITIONAL COST TO THE CONTRACTING OFFICER.
E.	ALL EXISTING LOW VOLTAGE (NETWORK, VOICE, COAX, SECURITY, AUDIO VIDEO) CABLING IS SURFACE ROUTED AND MOUNTED. ALL EXISTING LOW VOLTAGE CABLING AND PATHWAY SHALL BE DEMOLISHED, WITH EXCEPTION TO ANY ITEMS SPECIFICALLY NOTED TO BE PROTECTED IN PLACE OR RELOCATED.

KEYNOTE LEGEND

KEY VALUE	KEYNOTE TEXT
1	ALL EXISTING DISTRIBUTION / HORIZONTAL CABLING AND PATCH PANELS SHALL BE DEMOLISHED TO ORIGIN. FOR EXISTING INCOMING SERVICE CABLING, REFER TO DEMOLITION SITE PLAN, REHABILITATION SITE PLAN, AND REHABILITATION FLOOR PLANS. ALL EQUIPMENT NOT SCHEDULED FOR RELOCATION AND/OR REUSE SHALL BE DEMOLISHED. COORDINATE WITH CONTRACTING OFFICER PRIOR TO DEMOLITION OF ANY EQUIPMENT/CABLING.
2	ALL EQUIPMENT SHALL BE RELOCATED INTO THE NEW TELECOMMUNICATION SPACE. THE RACK SHALL BE RETURNED TO THE GOVERNMENT OR CONTRACTING OFFICER. REFER TO PROPOSED FLOOR PLANS FOR MORE INFORMATION.

DEMOLITION LEGEND

	OUTLETS, DEVICES, EQUIPMENT, ELEMENTS AND ANY OTHER ITEMS SHOWN IN GREY SHALL BE CONSIDERED OUTSIDE THIS SCOPE OF WORK. ITEMS SHALL BE CONSIDERED AS EXISTING TO REMAIN.
	OUTLETS, DEVICES, EQUIPMENT, ELEMENTS AND ANY OTHER ITEMS SHOWN IN BLACK SHALL BE CONSIDERED WITHIN THIS SCOPE OF WORK. ITEMS SHALL BE CONSIDERED AS SCHEDULED FOR DEMOLITION OR SCHEDULED FOR RELOCATION.

TRUE PLAN

COLORADO REGISTERED PROFESSIONAL ENGINEER 35717 01/08/2026

AE FIRM PRIME: OTAK, INC. REDMOND, WA SUBCONTRACTOR: AE DESIGN DENVER, CO	DESIGNED: AE DESIGN CADD TW/RS/BJLV TECH REVIEW: JM/JEB/MS DATE: 01/16/2026	SUB SHEET NO. TD200	TITLE OF SHEET TECH ENLARGED DEMOLITION - RACK LOCATIONS REHABILITATE KAWUNEECHE VISITOR CENTER ROCKY MOUNTAIN NATIONAL PARK

DRAWING NO. 121 / 165639
PMIS/PKG NO. 326235
SHEET 147 OF 177

1/8/2026 2:58:39 PM Autodesk Docs://2024-260 NPS ROMO Kawuneeche VC DD-CA wOtak/NPS ROMO KAWUEECHE VISITOR CENTER - ELECTRICAL.rvt

1 T201 FIRST FLOOR TECH - ADMIN WING
SCALE B

TECHNOLOGY GENERAL NOTES

A.	CONTRACTOR SHALL REFER TO LEGEND, NOTES, SCHEDULES, DETAILS, AND SPECIFICATIONS FOR MORE INFORMATION.
B.	DEVICE LOCATIONS SHOWN SHALL BE COORDINATED WITH ARCHITECTURAL ELEMENTS, FURNITURE, AND OTHER TRADES FOR FINAL INSTALLATION LOCATION.FINAL LOCATION TO BE APPROVED BY CONTRACTING OFFICER.
C.	ALL NETWORK, SECURITY, AND/OR AUDIO VIDEO CABLE SUPPORTING SYSTEM DEVICES/OUTLETS SHALL BE ENCLOSED IN CONDUIT FROM THE SERVER ROOM 116 TO THE DEVICE/OUTLET. NO CABLING SHALL BE VISIBLE OR 'FREE RUN' IN CEILING SPACE. REFER TO DETAILS.
D.	NO MORE THAN 100 FEET OF PATHWAY MAY BE INSTALLED BETWEEN PULL POINTS.
E.	ALL CONDUIT BENDS SHALL BE THE "SWEEPING" TYPE AND IN ACCORDANCE WITH THE BEND RADIUS REQUIREMENTS SPECIFIED IN THE PROJECT GENERAL NOTES. NO "BEND" OR "ELBOW" FITTINGS ARE PERMITTED UNLESS SPECIFICALLY NOTED.
F.	WHERE TECHNOLOGY OUTLET IS INDICATED ON AN EXISTING WALL, IT IS ACCEPTABLE TO UTILIZE FLEXIBLE CONDUIT TO ROUTE THROUGH WALL SPACE. WHERE TECHNOLOGY OUTLET IS INDICATED ON A NEW WALL, ELECTRICAL METALLIC TUBING (EMT) SHALL BE UTILIZED. REFER TO DETAILS FOR MORE INFORMATION.

REHABILITATION LEGEND

	OUTLETS, DEVICES, EQUIPMENT, ELEMENTS AND ANY OTHER ITEMS SHOWN IN GREY SHALL BE CONSIDERED OUTSIDE THIS SCOPE OF WORK. ITEMS SHALL BE CONSIDERED AS EXISTING TO REMAIN
	OUTLETS, DEVICES, EQUIPMENT, ELEMENTS AND ANY OTHER ITEMS SHOWN IN BLACK SHALL BE CONSIDERED WITHIN THIS SCOPE OF WORK. ITEMS SHALL BE CONSIDERED AS NEW, REFER TO RESPONSIBILITY MATRIX FOR MORE INFORMATION.

KEYNOTE LEGEND

KEY VALUE	KEYNOTE TEXT
1	COORDINATE PRECISE INSTALLED LOCATION WITH CONTRACTING OFFICER.

SCALE: B
4 0 4 8
SCALE OF FEET
TRUE PLAN

COLORADO REGISTERED PROFESSIONAL ENGINEER 35717 01/08/2026

AE FIRM	DESIGNED:	SUB SHEET NO.	TITLE OF SHEET	DRAWING NO.
PRIME: OTAK, INC. REDMOND, WA SUBCONTRACTOR: AE DESIGN DENVER, CO	AE DESIGN CADD TW/RS/BJLV TECH REVIEW: JM/JEB/MS DATE: 01/16/2026	T201	TECHNOLOGY ENLARGED PLAN - ADMIN WING REHABILITATE KAWUNEECHE VISITOR CENTER ROCKY MOUNTAIN NATIONAL PARK	121 165639 PMIS/PKG NO. 326235 SHEET 148 OF 177

1/8/2026 2:58:40 PM Autodesk Docs://2024-260 NPS ROMO Kawuneeche VC DD-CA wOtak/NPS ROMO KAWUEECHE VISITOR CENTER - ELECTRICAL.rvt

Autodesk Docs://2024-260 NPS ROMO Kawuneeche VC DD-CA wOtak/NPS ROMO KAWUEECHE VISITOR CENTER - ELECTRICAL.rvt
1/8/2026 2:58:45 PM

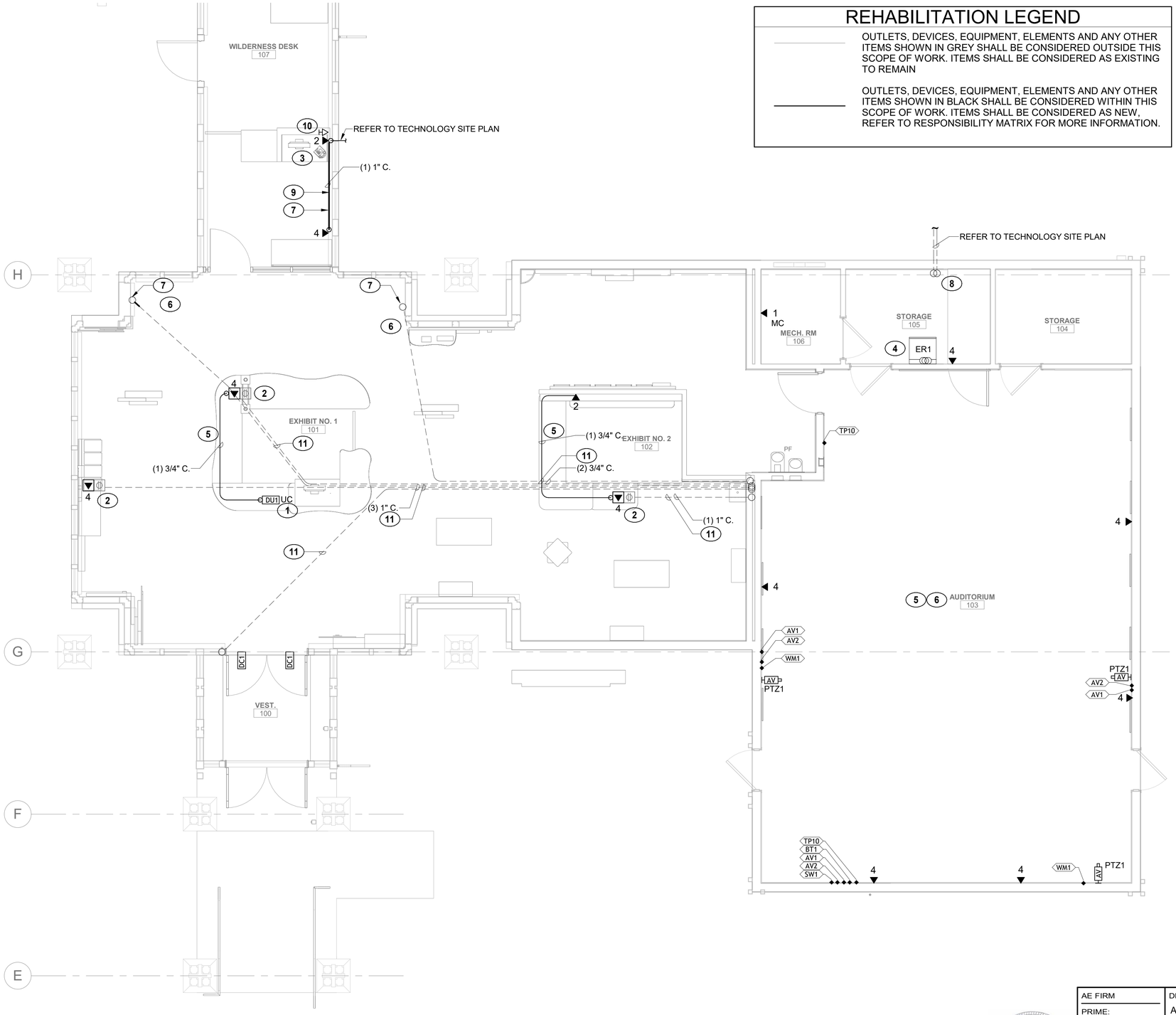

1 T202 FIRST FLOOR TECH - AUDITORIUM & EXHIBIT
SCALE B

REHABILITATION LEGEND

	OUTLETS, DEVICES, EQUIPMENT, ELEMENTS AND ANY OTHER ITEMS SHOWN IN GREY SHALL BE CONSIDERED OUTSIDE THIS SCOPE OF WORK. ITEMS SHALL BE CONSIDERED AS EXISTING TO REMAIN
	OUTLETS, DEVICES, EQUIPMENT, ELEMENTS AND ANY OTHER ITEMS SHOWN IN BLACK SHALL BE CONSIDERED WITHIN THIS SCOPE OF WORK. ITEMS SHALL BE CONSIDERED AS NEW, REFER TO RESPONSIBILITY MATRIX FOR MORE INFORMATION.

TECHNOLOGY GENERAL NOTES

A.	CONTRACTOR SHALL REFER TO LEGEND, NOTES, SCHEDULES, DETAILS, AND SPECIFICATIONS FOR MORE INFORMATION.
B.	DEVICE LOCATIONS SHOWN SHALL BE COORDINATED WITH ARCHITECTURAL ELEMENTS, FURNITURE, AND OTHER TRADES FOR FINAL INSTALLATION LOCATION.FINAL LOCATION TO BE APPROVED BY CONTRACTING OFFICER.
C.	ALL NETWORK, SECURITY, AND/OR AUDIO VIDEO CABLE SUPPORTING SYSTEM DEVICES/OUTLETS SHALL BE ENCLOSED IN CONDUIT FROM THE SERVER ROOM 116 TO THE DEVICE/OUTLET. NO CABLING SHALL BE VISIBLE OR 'FREE RUN' IN CEILING SPACE. REFER TO DETAILS.
D.	NO MORE THAN 100 FEET OF PATHWAY MAY BE INSTALLED BETWEEN PULL POINTS.
E.	ALL CONDUIT BENDS SHALL BE THE "SWEEPING" TYPE AND IN ACCORDANCE WITH THE BEND RADIUS REQUIREMENTS SPECIFIED IN THE PROJECT GENERAL NOTES. NO "BEND" OR "ELBOW" FITTINGS ARE PERMITTED UNLESS SPECIFICALLY NOTED.
F.	WHERE TECHNOLOGY OUTLET IS INDICATED ON AN EXISTING WALL, IT IS ACCEPTABLE TO UTILIZE FLEXIBLE CONDUIT TO ROUTE THROUGH WALL SPACE. WHERE TECHNOLOGY OUTLET IS INDICATED ON A NEW WALL, ELECTRICAL METALLIC TUBING (EMT) SHALL BE UTILIZED. REFER TO DETAILS FOR MORE INFORMATION.

KEYNOTE LEGEND

KEY VALUE	KEYNOTE TEXT
1	PROVIDE AN UNDER COUNTER MOUNTED DURESS BUTTON, BOSCH ISC-PB1-100 (BASIS OF DESIGN). MOUNTING LOCATION SHALL BE CONFIRMED BY CONTRACTING OFFICER.
2	NETWORK OUTLET SHALL SUPPORT EXHIBIT, LOCATION INDICATED IS IN COORDINATION WITH EXHIBIT DESIGN REQUIREMENTS. PRECISE LOCATION SHALL BE COORDINATED WITH EXHIBIT INSTALLATION CONTRACTOR AND CONTRACTING OFFICER PRIOR TO INSTALLATION.
3	THE WEATHER STATION CABLING SHALL REMAIN CONNECTED TO END DEVICE, BOTH THE END DEVICE AND CABLING SHALL BE RELOCATED TO WILDERNESS DESK DURING CONSTRUCTION. COORDINATE WITH CONTRACTING OFFICER FOR ANY REQUIRED DOWNTIME AND THE FINAL INSTALLATION LOCATION.
4	BLU RAY PLAYER SHALL CONNECT TO PROJECTOR AND SHALL BE INCORPORATED INTO EQUIPMENT RACK. SEAMLESS CONNECTIVITY SHALL BE TESTED AND APPROVED BY CONTRACTING OFFICER. AV CONTRACTOR TO COORDINATE.
5	CONDUIT SHALL BE ROUTED TIGHT AROUND CASEWORK/DESK. REFER TO T600 DETAIL #8.
6	CONDUIT SHALL BE TRANSITIONED TO WIREMOLD AT SLAB PENETRATION. REFER TO T601 DETAIL #5. WIREMOLD SHALL BE PAINTED TO MATCH ATTACHED WALL.
7	EXPOSED CONDUIT INDICATED SHALL BE SURFACE MOUNTED WIREMOLD. ALL SURFACE MOUNTED WIREMOLD SHALL BE PAINTED TO MATCH WALLS AT WHICH IS ATTACHED.
8	REFER TO T602 DETAIL #2.
9	SURFACE MOUNTED WIREMOLD SHALL BE ROUTED CLOSE TO FLOOR/BASEBOARD TO LIMIT VISIBILITY AND CONCEAL AS MUCH AS POSSIBLE.
10	COORDINATE WITH CONTRACTING OFFICER TO LOCATE THE SERVICE PROVIDER WAP (SEE DEMOLITION SHEETS) FROM THE ENTRANCE DESK TO THE WILDERNESS DESK. NEW COAXIAL CABLE SHALL TERMINATE INTO RELOCATED WAP. COORDINATE WITH CONTRACTING OFFICER FOR PRECISE WAP LOCATION.
11	EC SHALL VERIFY SLAB DEPTH AND ROUTE CONDUIT BELOW EXISTING UNDERSLAB DUCTS PRIOR TO ROUGH-IN.

SCALE: B
4 0 4 8
SCALE OF FEET
TRUE PLAN

COLORADO REGISTERED ARCHITECT 35717 01/08/2026 PROFESSIONAL ENGINEER

AE FIRM PRIME: OTAK, INC. REDMOND, WA SUBCONTRACTOR: AE DESIGN DENVER, CO	DESIGNED: AE DESIGN CADD TW/RS/BJLV TECH REVIEW: JM/JEB/MS DATE: 01/16/2026	SUB SHEET NO. T202	TITLE OF SHEET TECHNOLOGY ENLARGED PLAN - AUDITORIUM/EXHIBIT REHABILITATE KAWUNEECHE VISITOR CENTER ROCKY MOUNTAIN NATIONAL PARK

DRAWING NO. 121 / 165639
PMIS/PKG NO. 326235
SHEET 149 OF 177

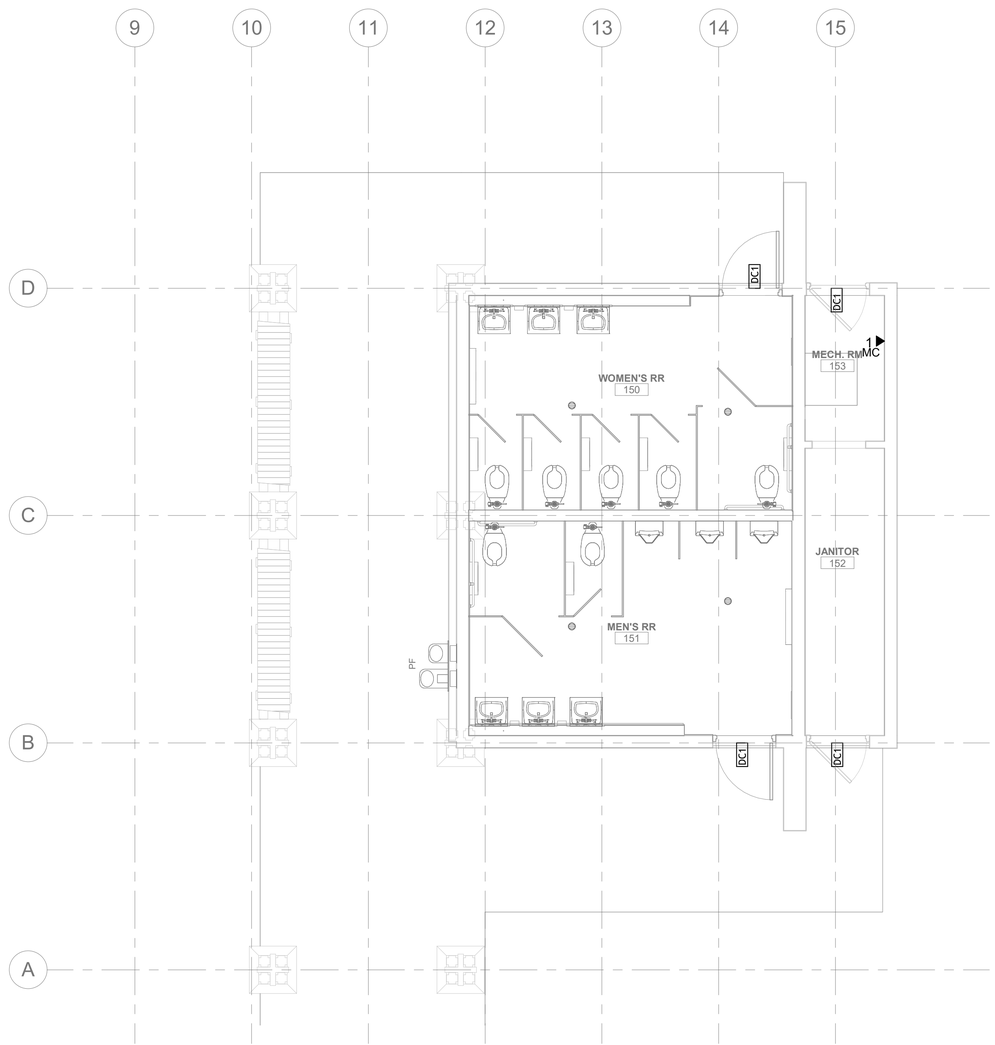

1 T203 FIRST FLOOR TECH - COMFORT STATION
SCALE B

TECHNOLOGY GENERAL NOTES

A.	CONTRACTOR SHALL REFER TO LEGEND, NOTES, SCHEDULES, DETAILS, AND SPECIFICATIONS FOR MORE INFORMATION.
B.	DEVICE LOCATIONS SHOWN SHALL BE COORDINATED WITH ARCHITECTURAL ELEMENTS, FURNITURE, AND OTHER TRADES FOR FINAL INSTALLATION LOCATION.FINAL LOCATION TO BE APPROVED BY CONTRACTING OFFICER.
C.	ALL NETWORK, SECURITY, AND/OR AUDIO VIDEO CABLE SUPPORTING SYSTEM DEVICES/OUTLETS SHALL BE ENCLOSED IN CONDUIT FROM THE SERVER ROOM 116 TO THE DEVICE/OUTLET. NO CABLING SHALL BE VISIBLE OR 'FREE RUN' IN CEILING SPACE. REFER TO DETAILS.
D.	NO MORE THAN 100 FEET OF PATHWAY MAY BE INSTALLED BETWEEN PULL POINTS.
E.	ALL CONDUIT BENDS SHALL BE THE "SWEEPING" TYPE AND IN ACCORDANCE WITH THE BEND RADIUS REQUIREMENTS SPECIFIED IN THE PROJECT GENERAL NOTES. NO "BEND" OR "ELBOW" FITTINGS ARE PERMITTED UNLESS SPECIFICALLY NOTED.
F.	WHERE TECHNOLOGY OUTLET IS INDICATED ON AN EXISTING WALL, IT IS ACCEPTABLE TO UTILIZE FLEXIBLE CONDUIT TO ROUTE THROUGH WALL SPACE. WHERE TECHNOLOGY OUTLET IS INDICATED ON A NEW WALL, ELECTRICAL METALLIC TUBING (EMT) SHALL BE UTILIZED. REFER TO DETAILS FOR MORE INFORMATION.

REHABILITATION LEGEND

	OUTLETS, DEVICES, EQUIPMENT, ELEMENTS AND ANY OTHER ITEMS SHOWN IN GREY SHALL BE CONSIDERED OUTSIDE THIS SCOPE OF WORK. ITEMS SHALL BE CONSIDERED AS EXISTING TO REMAIN
	OUTLETS, DEVICES, EQUIPMENT, ELEMENTS AND ANY OTHER ITEMS SHOWN IN BLACK SHALL BE CONSIDERED WITHIN THIS SCOPE OF WORK. ITEMS SHALL BE CONSIDERED AS NEW, REFER TO RESPONSIBILITY MATRIX FOR MORE INFORMATION.

SCALE: B
4 0 4 8
SCALE OF FEET
TRUE PLAN

COLORADO REGISTERED PROFESSIONAL ENGINEER 35717 01/08/2026

AE FIRM PRIME: OTAK, INC. REDMOND, WA SUBCONTRACTOR: AE DESIGN DENVER, CO	DESIGNED: AE DESIGN CADD TW/RS/BJLV TECH REVIEW: JM/JEB/MS DATE: 01/16/2026	SUB SHEET NO. T203	TITLE OF SHEET TECHNOLOGY ENLARGED PLAN - COMFORT STATION REHABILITATE KAWUNEECHE VISITOR CENTER ROCKY MOUNTAIN NATIONAL PARK

DRAWING NO. 121 / 165639
PMIS/PKG NO. 326235
SHEET 150 OF 177

1/8/2026 2:58:48 PM Autodesk Docs://2024-260 NPS ROMO Kawuneeche VC DD-CA wOtak/NPS ROMO KAWUEECHE VISITOR CENTER - ELECTRICAL.rvt