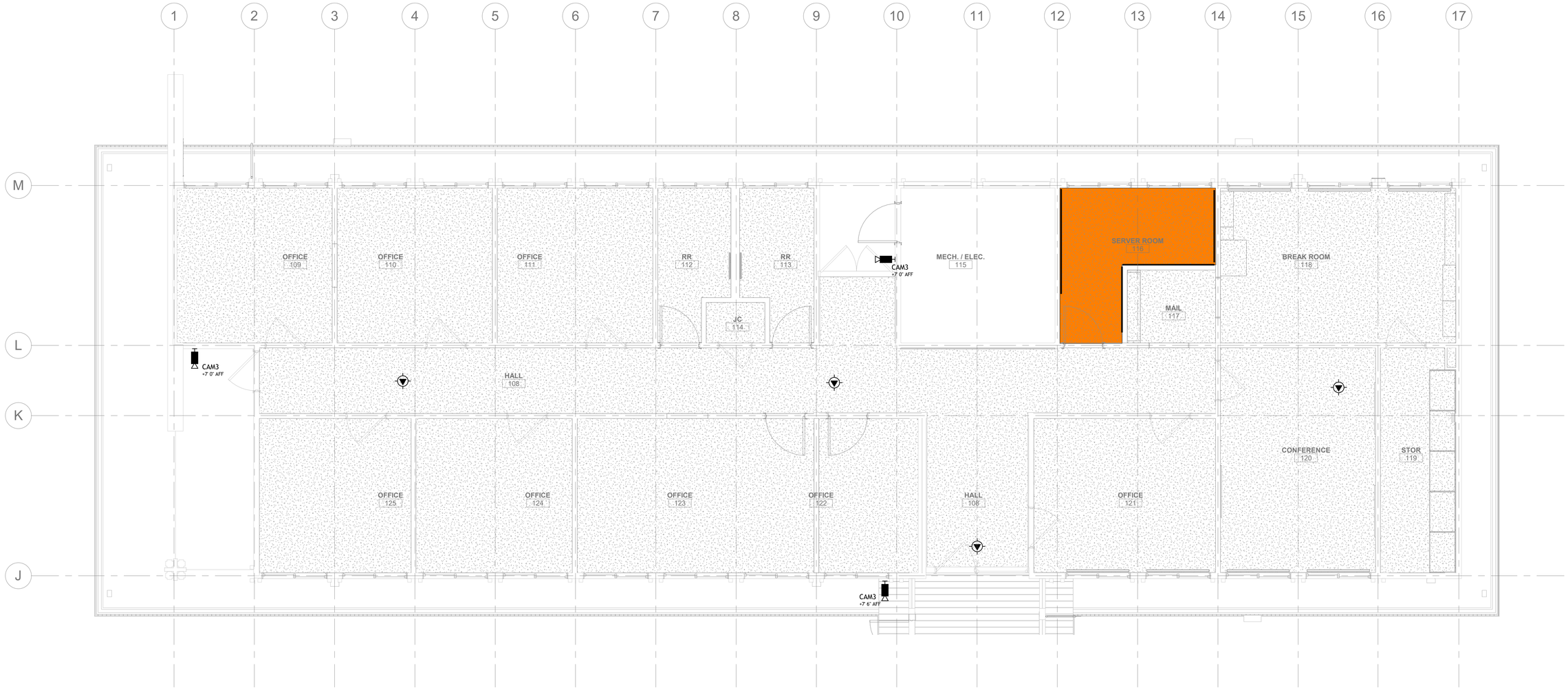

1 T301 TECH FIRST FLOOR CEILING PLAN - ADMIN WING

SCALE B

TECHNOLOGY GENERAL NOTES

A.	CONTRACTOR SHALL REFER TO LEGEND, NOTES, SCHEDULES, DETAILS, AND SPECIFICATIONS FOR MORE INFORMATION.
B.	DEVICE LOCATIONS SHOWN SHALL BE COORDINATED WITH ARCHITECTURAL ELEMENTS, FURNITURE, AND OTHER TRADES FOR FINAL INSTALLATION LOCATION.FINAL LOCATION TO BE APPROVED BY CONTRACTING OFFICER.
C.	ALL NETWORK, SECURITY, AND/OR AUDIO VIDEO CABLE SUPPORTING SYSTEM DEVICES/OUTLETS SHALL BE ENCLOSED IN CONDUIT FROM THE SERVER ROOM 116 TO THE DEVICE/OUTLET. NO CABLING SHALL BE VISIBLE OR 'FREE RUN' IN CEILING SPACE. REFER TO DETAILS.
D.	NO MORE THAN 100 FEET OF PATHWAY MAY BE INSTALLED BETWEEN PULL POINTS.
E.	ALL CONDUIT BENDS SHALL BE THE "SWEEPING" TYPE AND IN ACCORDANCE WITH THE BEND RADIUS REQUIREMENTS SPECIFIED IN THE PROJECT GENERAL NOTES. NO "BEND" OR "ELBOW" FITTINGS ARE PERMITTED UNLESS SPECIFICALLY NOTED.
F.	WHERE TECHNOLOGY OUTLET IS INDICATED ON AN EXISTING WALL, IT IS ACCEPTABLE TO UTILIZE FLEXIBLE CONDUIT TO ROUTE THROUGH WALL SPACE. WHERE TECHNOLOGY OUTLET IS INDICATED ON A NEW WALL, ELECTRICAL METALLIC TUBING (EMT) SHALL BE UTILIZED. REFER TO DETAILS FOR MORE INFORMATION.

REHABILITATION LEGEND

———	OUTLETS, DEVICES, EQUIPMENT, ELEMENTS AND ANY OTHER ITEMS SHOWN IN GREY SHALL BE CONSIDERED OUTSIDE THIS SCOPE OF WORK. ITEMS SHALL BE CONSIDERED AS EXISTING TO REMAIN
———	OUTLETS, DEVICES, EQUIPMENT, ELEMENTS AND ANY OTHER ITEMS SHOWN IN BLACK SHALL BE CONSIDERED WITHIN THIS SCOPE OF WORK. ITEMS SHALL BE CONSIDERED AS NEW, REFER TO RESPONSIBILITY MATRIX FOR MORE INFORMATION.

SCALE: B 4 0 4 8 SCALE OF FEET

TRUE PLAN

COLORADO REGISTERED PROFESSIONAL ENGINEER 35717 01/08/2026

AE FIRM PRIME: OTAK, INC. REDMOND, WA SUBCONTRACTOR: AE DESIGN DENVER, CO	DESIGNED: AE DESIGN CADD TW/RS/BJLV TECH REVIEW: JM/JEB/MS DATE: 01/16/2026	SUB SHEET NO. T301	TITLE OF SHEET TECHNOLOGY RCP - ADMIN WING REHABILITATE KAWUNEECHE VISITOR CENTER ROCKY MOUNTAIN NATIONAL PARK	DRAWING NO. 121 165639 PMIS/PKG NO. 326235 SHEET 151 OF 177

1/8/2026 2:58:48 PM Autodesk Docs://2024-260 NPS ROMO Kawuneeche VC DD-CA wOtak/NPS ROMO KAWUEECHE VISITOR CENTER - ELECTRICAL.rvt

Autodesk Docs://2024-260 NPS ROMO Kawuneeche VC DD-CA wOtak/NPS ROMO KAWUEECHE VISITOR CENTER - ELECTRICAL.rvt
1/8/2026 2:58:49 PM

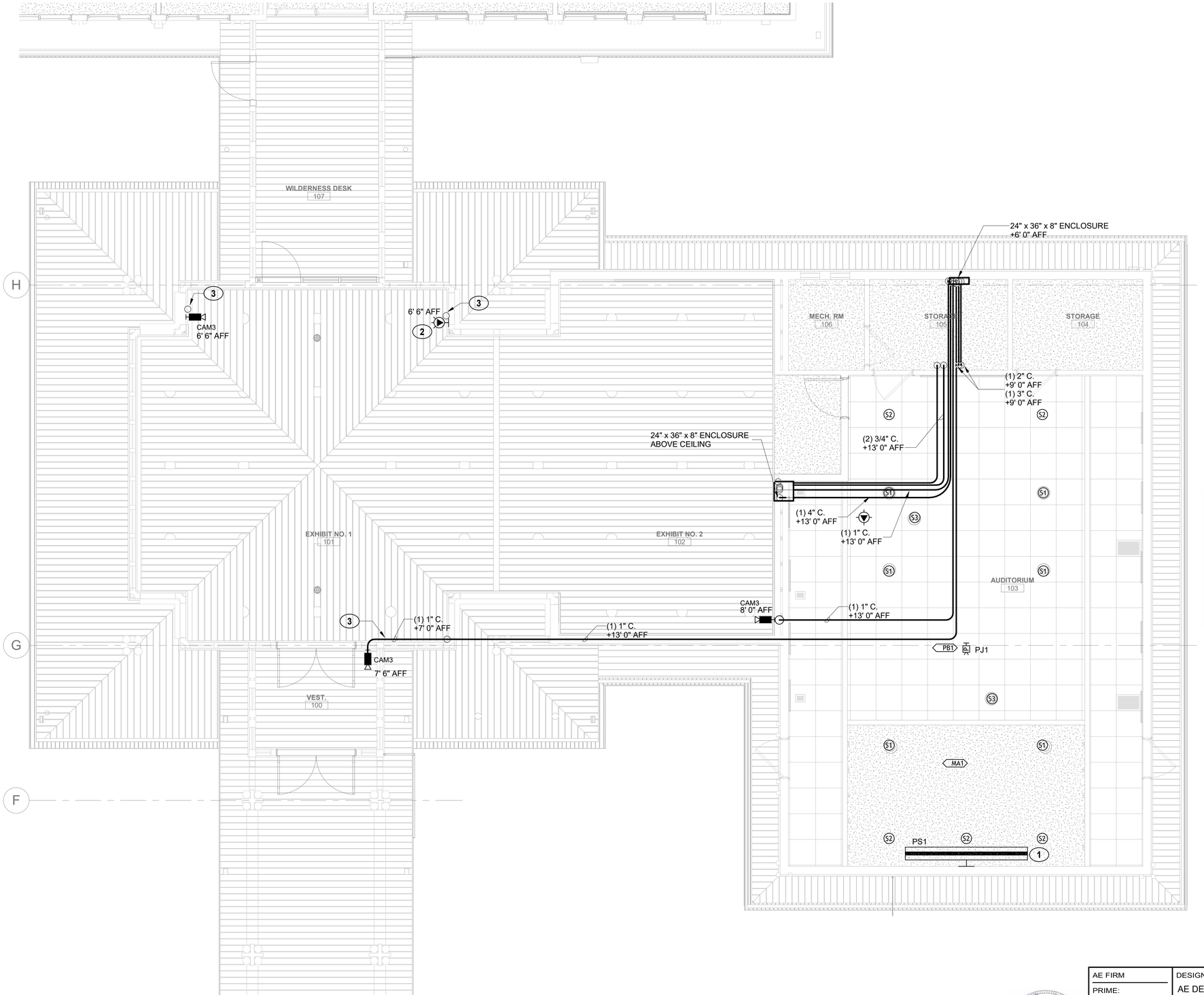

TECHNOLOGY GENERAL NOTES

A.	CONTRACTOR SHALL REFER TO LEGEND, NOTES, SCHEDULES, DETAILS, AND SPECIFICATIONS FOR MORE INFORMATION.
B.	DEVICE LOCATIONS SHOWN SHALL BE COORDINATED WITH ARCHITECTURAL ELEMENTS, FURNITURE, AND OTHER TRADES FOR FINAL INSTALLATION LOCATION.FINAL LOCATION TO BE APPROVED BY CONTRACTING OFFICER.
C.	ALL NETWORK, SECURITY, AND/OR AUDIO VIDEO CABLE SUPPORTING SYSTEM DEVICES/OUTLETS SHALL BE ENCLOSED IN CONDUIT FROM THE SERVER ROOM 116 TO THE DEVICE/OUTLET. NO CABLING SHALL BE VISIBLE OR 'FREE RUN' IN CEILING SPACE. REFER TO DETAILS.
D.	NO MORE THAN 100 FEET OF PATHWAY MAY BE INSTALLED BETWEEN PULL POINTS.
E.	ALL CONDUIT BENDS SHALL BE THE "SWEEPING" TYPE AND IN ACCORDANCE WITH THE BEND RADIUS REQUIREMENTS SPECIFIED IN THE PROJECT GENERAL NOTES. NO "BEND" OR "ELBOW" FITTINGS ARE PERMITTED UNLESS SPECIFICALLY NOTED.
F.	WHERE TECHNOLOGY OUTLET IS INDICATED ON AN EXISTING WALL, IT IS ACCEPTABLE TO UTILIZE FLEXIBLE CONDUIT TO ROUTE THROUGH WALL SPACE. WHERE TECHNOLOGY OUTLET IS INDICATED ON A NEW WALL, ELECTRICAL METALLIC TUBING (EMT) SHALL BE UTILIZED. REFER TO DETAILS FOR MORE INFORMATION.

REHABILITATION LEGEND

———	OUTLETS, DEVICES, EQUIPMENT, ELEMENTS AND ANY OTHER ITEMS SHOWN IN GREY SHALL BE CONSIDERED OUTSIDE THIS SCOPE OF WORK. ITEMS SHALL BE CONSIDERED AS EXISTING TO REMAIN
———	OUTLETS, DEVICES, EQUIPMENT, ELEMENTS AND ANY OTHER ITEMS SHOWN IN BLACK SHALL BE CONSIDERED WITHIN THIS SCOPE OF WORK. ITEMS SHALL BE CONSIDERED AS NEW, REFER TO RESPONSIBILITY MATRIX FOR MORE INFORMATION.

KEYNOTE LEGEND

KEY VALUE	KEYNOTE TEXT
1	BOTTOM OF PROJECTOR SCREEN SHALL BE 4' 0" AFF WHEN SCREEN IS DEPLOYED.
2	COORDINATE PRECISE INSTALLED LOCATION WITH CONTRACTING OFFICER.
3	EXPOSED CONDUIT INDICATED SHALL BE SURFACE MOUNTED WIREMOLD. ALL SURFACE MOUNTED WIREMOLD SHALL BE PAINTED TO MATCH WALLS AT WHICH IS ATTACHED.

SCALE: B
4 0 4 8
SCALE OF FEET
TRUE PLAN

1 / T302 TECH FIRST FLOOR CEILING PLAN - AUDITORIUM & EXHIBIT
SCALE B

COLORADO REGISTERED PROFESSIONAL ENGINEER 35717 01/08/2026

AE FIRM PRIME: OTAK, INC. REDMOND, WA SUBCONTRACTOR: AE DESIGN DENVER, CO	DESIGNED: AE DESIGN CADD TW/RS/BJLV TECH REVIEW: JM/JEB/MS DATE: 01/16/2026	SUB SHEET NO. T302	TITLE OF SHEET TECHNOLOGY RCP - AUDITORIUM & EXHIBIT REHABILITATE KAWUNEECHE VISITOR CENTER ROCKY MOUNTAIN NATIONAL PARK	DRAWING NO. 121 165639 PMIS/PKG NO. 326235 SHEET 152 OF 177

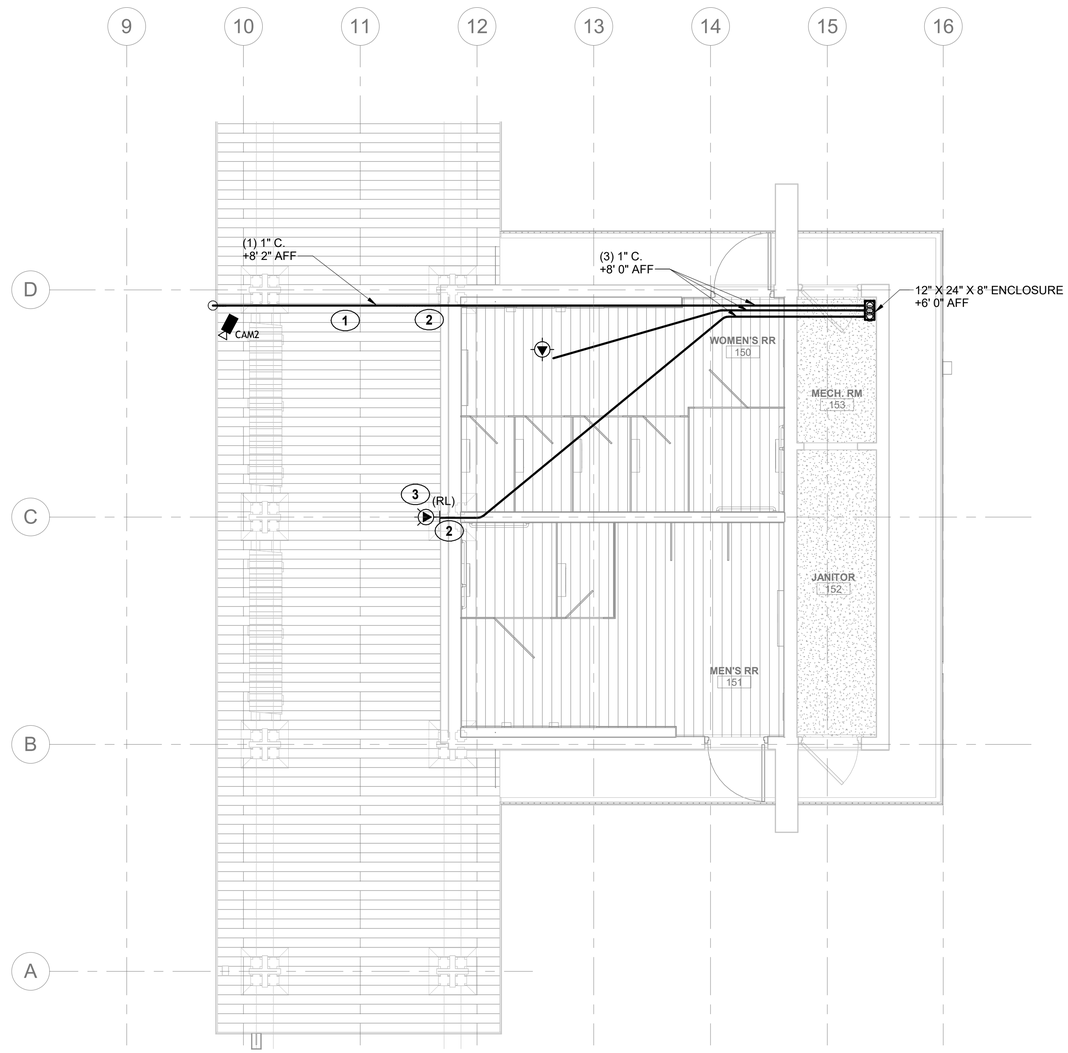

1 / T303 TECH FIRST FLOOR CEILING PLAN - COMFORT STATION

SCALE (B)

TECHNOLOGY GENERAL NOTES

A.	CONTRACTOR SHALL REFER TO LEGEND, NOTES, SCHEDULES, DETAILS, AND SPECIFICATIONS FOR MORE INFORMATION.
B.	DEVICE LOCATIONS SHOWN SHALL BE COORDINATED WITH ARCHITECTURAL ELEMENTS, FURNITURE, AND OTHER TRADES FOR FINAL INSTALLATION LOCATION.FINAL LOCATION TO BE APPROVED BY CONTRACTING OFFICER.
C.	ALL NETWORK, SECURITY, AND/OR AUDIO VIDEO CABLE SUPPORTING SYSTEM DEVICES/OUTLETS SHALL BE ENCLOSED IN CONDUIT FROM THE SERVER ROOM 116 TO THE DEVICE/OUTLET. NO CABLING SHALL BE VISIBLE OR 'FREE RUN' IN CEILING SPACE. REFER TO DETAILS.
D.	NO MORE THAN 100 FEET OF PATHWAY MAY BE INSTALLED BETWEEN PULL POINTS.
E.	ALL CONDUIT BENDS SHALL BE THE "SWEEPING" TYPE AND IN ACCORDANCE WITH THE BEND RADIUS REQUIREMENTS SPECIFIED IN THE PROJECT GENERAL NOTES. NO "BEND" OR "ELBOW" FITTINGS ARE PERMITTED UNLESS SPECIFICALLY NOTED.
F.	WHERE TECHNOLOGY OUTLET IS INDICATED ON AN EXISTING WALL, IT IS ACCEPTABLE TO UTILIZE FLEXIBLE CONDUIT TO ROUTE THROUGH WALL SPACE. WHERE TECHNOLOGY OUTLET IS INDICATED ON A NEW WALL, ELECTRICAL METALLIC TUBING (EMT) SHALL BE UTILIZED. REFER TO DETAILS FOR MORE INFORMATION.

REHABILITATION LEGEND

	OUTLETS, DEVICES, EQUIPMENT, ELEMENTS AND ANY OTHER ITEMS SHOWN IN GREY SHALL BE CONSIDERED OUTSIDE THIS SCOPE OF WORK. ITEMS SHALL BE CONSIDERED AS EXISTING TO REMAIN
	OUTLETS, DEVICES, EQUIPMENT, ELEMENTS AND ANY OTHER ITEMS SHOWN IN BLACK SHALL BE CONSIDERED WITHIN THIS SCOPE OF WORK. ITEMS SHALL BE CONSIDERED AS NEW, REFER TO RESPONSIBILITY MATRIX FOR MORE INFORMATION.

KEYNOTE LEGEND

KEY VALUE	KEYNOTE TEXT
1	CONDUIT SHALL BE ROUTED TIGHT ALONG ROOFLINE OF COVERED WALKWAY. CONDUIT SHALL BE PAINTED TO MATCH THE SURROUNDING SURFACE.
2	PENETRATION LOCATION FROM COVERED WALKWAY INTO ATTIC SPACE SHALL BE APPROVED BY CONTRACTING OFFICER. THE PENETRATION SHALL BE CONCEALED AS MUCH AS POSSIBLE.
3	EXTERIOR WIRELESS ACCESS POINT (WAP) SHALL BE RELOCATED TO THIS LOCATION TO SUPPORT EXTERIOR WIFI ACCESS IN THE PUBLIC PARKING LOT. THE WALL MOUNTED ENCLOSURE THE WIRELESS ACCESS POINT SHALL BE MOUNTED IN SHALL BE OUTDOOR RATED, RADIO FREQUENCY TRANSPARENT, AND PAINTABLE. ENCLOSURE SHALL BE PAINTED WITH MANUFACTURER APPROVED PAINT TO COLOR MATCH BUILDING WHERE MOUNTED. PAINT COLOR AND MOUNTING LOCATION TO BE APPROVED BY CONTRACTING OFFICER. THE ENCLOSURE SHALL BE MOUNTED ABOVE THE COVERED WALKWAY ROOF, SURFACE MOUNTED TO THE COMFORT STATION WALL.

SCALE: (B) 4 0 4 8 SCALE OF FEET

TRUE PLAN

COLORADO REGISTERED PROFESSIONAL ENGINEER 35717 01/08/2026

AE FIRM PRIME: OTAK, INC. REDMOND, WA SUBCONTRACTOR: AE DESIGN DENVER, CO	DESIGNED: AE DESIGN CADD TW/RS/BJLV TECH REVIEW: JM/JEB/MS DATE: 01/16/2026	SUB SHEET NO. T303	TITLE OF SHEET TECHNOLOGY RCP - COMFORT STATION REHABILITATE KAWUNEECHE VISITOR CENTER ROCKY MOUNTAIN NATIONAL PARK	DRAWING NO. 121 165639 PMIS/PKG NO. 326235 SHEET 153 OF 177

1/8/2026 2:58:49 PM Autodesk Docs://2024-260 NPS ROMO Kawuneeche VC DD-CA wOtak/NPS ROMO KAWUEECHE VISITOR CENTER - ELECTRICAL.rvt

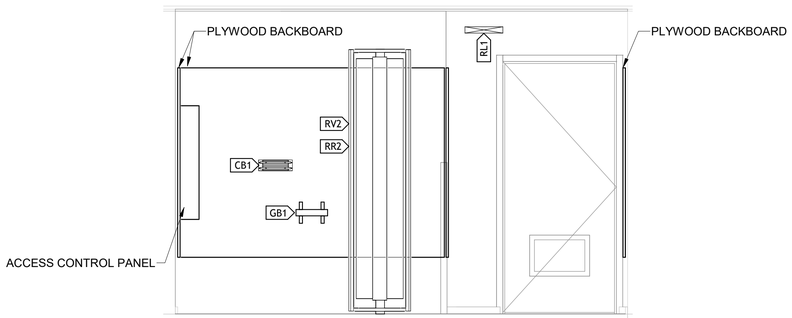

3 T400 SERVER ROOM 116 - SOUTH ELEVATION
SCALE D

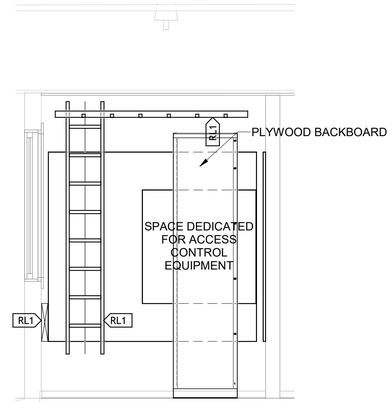

2 T400 SERVER ROOM 116 - EAST ELEVATION
SCALE D

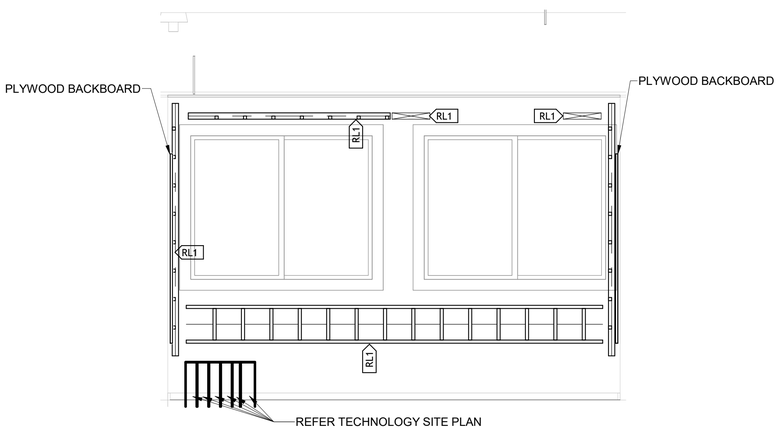

5 T400 SERVER ROOM 116 - NORTH ELEVATION
SCALE D

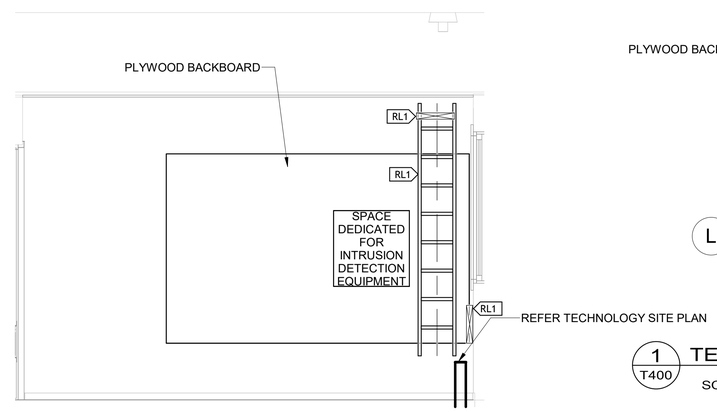

4 T400 SERVER ROOM 116 - WEST ELEVATION
SCALE D

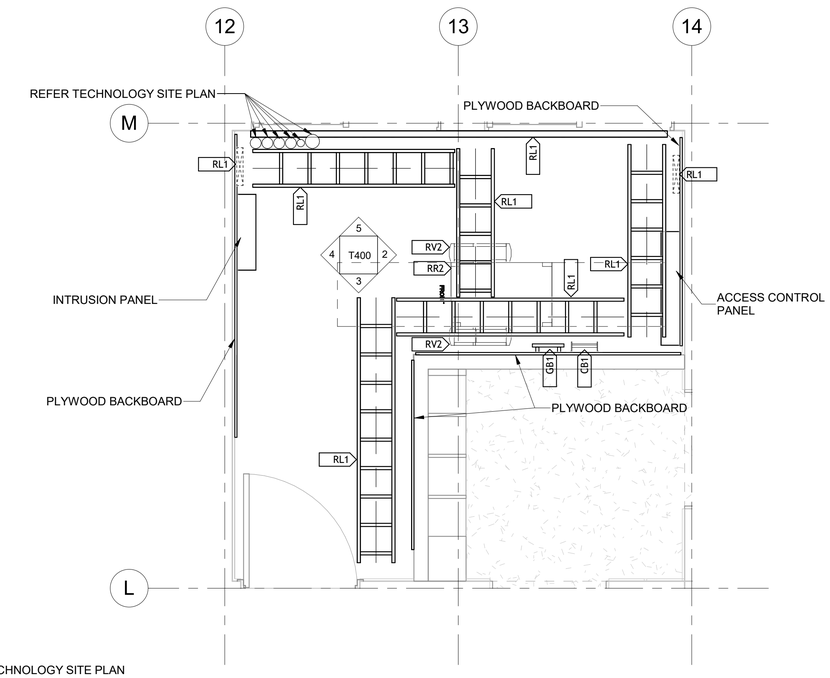

1 T400 TECHNOLOGY ENLARGED PLAN - SERVER ROOM 116
SCALE D

TECHNOLOGY GENERAL NOTES

A.	CONTRACTOR SHALL REFER TO LEGEND, NOTES, SCHEDULES, DETAILS, AND SPECIFICATIONS FOR MORE INFORMATION.
B.	NO EQUIPMENT MAY ENTER OR PASS THROUGH THE TELECOMMUNICATION SPACE UNLESS SPECIFICALLY SUPPORTING THE SPACE. THIS INCLUDES, BUT IS NOT LIMITED TO, HVAC DUCTS, CONDUIT, PLUMBING, ETC.
C.	ALL CABLING ROUTED VERTICALLY ON WALLS SHALL BE SUPPORTED WITH CABLE TIES MOUNTED TO WALL MOUNTED VERTICAL LADDER RACK AND/OR D-RINGS.
D.	A MINIMUM OF 3 FEET OF CLEARANCE SHALL BE MAINTAINED IN THE FRONT AND BACK OF EACH RACK, AFTER EQUIPMENT IS INSTALLED. CONTRACTOR SHALL ASSUME A MINIMUM OF 24 INCHES OF DEPTH FOR RACK MOUNTED ACTIVE EQUIPMENT IN 2-POST RACKS.
E.	ALL WALLS SHALL BE COVERED WITH PLYWOOD, REFER TO SPECIFICATIONS FOR MORE INFORMATION.
F.	THE DEDICATED IN-ROOM HVAC THERMOSTAT SHALL BE MOUNTED ADJACENT THE LIGHT SWITCH NEAR ENTRY DOOR.
G.	CONTRACTOR SHALL COORDINATE WITH ALL OTHER CONTRACTORS/TRADES TO ENSURE WALL AND RACK SPACE ALLOCATION NEEDS.

SCALE: D 2 0 2 4
SCALE OF FEET

TRUE PLAN

COLORADO REGISTERED PROFESSIONAL ENGINEER 35717 01/08/2026

AE FIRM PRIME: OTAK, INC. REDMOND, WA SUBCONTRACTOR: AE DESIGN DENVER, CO	DESIGNED: AE DESIGN CADD TW/RS/BJLV TECH REVIEW: JM/JEB/MS DATE: 01/16/2026	SUB SHEET NO. T400	TITLE OF SHEET TECHNOLOGY ENLARGED - RACK LOCATION REHABILITATE KAWUNEECHE VISITOR CENTER ROCKY MOUNTAIN NATIONAL PARK

DRAWING NO. 121 165639
PMIS/PKG NO. 326235
SHEET 154 OF 177

1/8/2026 2:58:50 PM Autodesk Docs://2024-260 NPS ROMO Kawuneeche VC DD-CA wOtak/NPS ROMO KAWUEECHE VISITOR CENTER - ELECTRICAL.rvt

1/8/2026 2:58:51 PM Autodesk Docs://2024-260 NPS ROMO Kawuneeche VC DD-CA wOtak/NPS ROMO KAWUEECHE VISITOR CENTER - ELECTRICAL.rvt

		KEY	RACK 01		
6" WIDE VERTICAL WIRE MANAGER	45	RA6	UPPER TROUGH	45	6" WIDE VERTICAL WIRE MANAGER
	44	FP1	FIBER PANEL	44	
	43	RA7	HORIZONTAL WIRE MANAGER	43	
	42	SPACE RESERVED FOR OWNER HEADEND		42	
	41			41	
	40			40	
	39			39	
	38			38	
	37			37	
	36	SP1	PDU	36	
	35	CP1	CAT6A PATCH PANEL	35	
	34	RA7	HORIZONTAL WIRE MANAGER	34	
	33	OWNER SWITCH		33	
	32	RA7	HORIZONTAL WIRE MANAGER	32	
	31	CP2	CAT6A PATCH PANEL	31	
	30			30	
	29	RA7	HORIZONTAL WIRE MANAGER	29	
	28	OWNER SWITCH		28	
	27	RA7	HORIZONTAL WIRE MANAGER	27	
	26	CP2	CAT6A PATCH PANEL	26	
	25			25	
	24	RA7	HORIZONTAL WIRE MANAGER	24	
	23	OWNER SWITCH		23	
	22	RA7	HORIZONTAL WIRE MANAGER	22	
	21	CP2	CAT6A PATCH PANEL	21	
	20			20	
	19	RA7	HORIZONTAL WIRE MANAGER	19	
	18	SV1	VIDEO SURVEILLANCE DEDICATED SWITCH	18	
	17	FUTURE		17	
	16			16	
	15			15	
	14			14	
	13			13	
	12			12	
	11			11	
	10			10	
	9			9	
	8	UPS (E)		8	
	7			7	
	6	UPS (E)		6	
	5			5	
	4	UPS (E)		4	
	3			3	
	2	EMPTY		2	
	1			1	
RV2	RR2				RV2

1 / T401 SERVER ROOM 116 - RACK ELEVATION

COLORADO REGISTERED PROFESSIONAL ENGINEER 35717 01/08/2026

AE FIRM	DESIGNED:	SUB SHEET NO.	TITLE OF SHEET	DRAWING NO.
PRIME: OTAK, INC. REDMOND, WA	AE DESIGN	T401	TECHNOLOGY - RACK ELEVATIONS	121 / 165639
SUBCONTRACTOR: AE DESIGN DENVER, CO	CADD: TW/RS/BJLV		REHABILITATE KAWUNEECHE VISITOR CENTER ROCKY MOUNTAIN NATIONAL PARK	PMIS/PKG NO. 326235
	TECH REVIEW: JM/JEB/MS			SHEET 155 OF 177
	DATE: 01/16/2026			

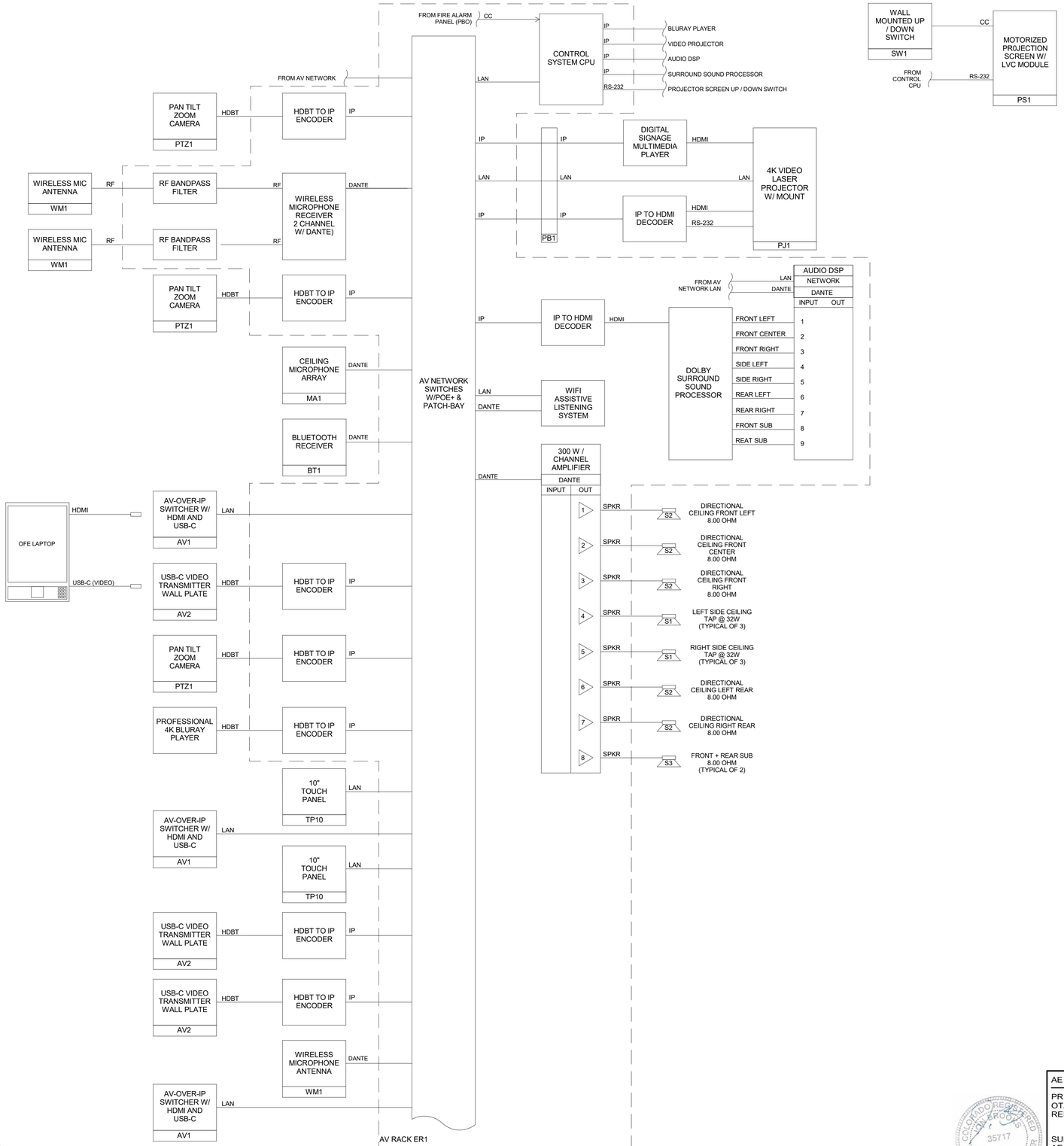

1 T500 AV ONE-LINE AUDITORIUM

GENERAL NOTES:

A. ALL DATA PATCH CABLES REQUIRED TO CONNECT AN AV DEVICE TO A DATA NETWORK OUTLET SHALL BE PROVIDED BY THE AVC AND SHALL BE OF EXACTLY THE SAME CATEGORY CLASS (OR BETTER) AS THE INCOMING CABLES, I.E. A SHIELDED CAT6A INCOMING CABLES TO THE PATCH BAY SHALL REQUIRE A SHIELDED CAT6A RATED PATCH CABLE

B. AVC SHALL PROVIDE ALL REQUIRED SPECIALIZED/CUSTOM CABLES PROVIDING THE PARK WITH A TURN-KEY SOLUTION.

C. AVC SHALL SUPPLY AND UTILIZE RS-485/422/232 BALUNS FOR LOW VOLTAGE CONTROL APPLICATIONS ETCETERA AS DISTANCE LIMITATIONS REQUIRE.

D. AVC MUST UTILIZE THE 274100 SPECIFICATION SECTION IN CONJUNCTION WITH THESE DRAWINGS TO FULLY UNDERSTAND THE SCOPE OF WORK AND SYSTEM FUNCTIONALITY REQUIRED FOR THIS PROJECT.

E. AVC SHALL VERIFY AND COORDINATE ALL INFRASTRUCTURE REQUIREMENTS, I.E. CONDUIT, PULL, JOB AND BACK BOXES ETCETERA WITH EC PRIOR TO THE COMPLETION OF ELECTRICAL ROUGH-IN PHASE. IMMEDIATELY BRING DISCREPANCIES TO THE ATTENTION OF THE EC AND THE AV CONSULTANT.

F. PROVIDE QUANTITIES AS SHOWN ELSEWHERE ON THE DRAWINGS, AS CALLED FOR IN THE SPECIFICATIONS, AND/OR AS NECESSARY FOR COMPLETE AND FULLY OPERATIONAL SYSTEM.

G. ALL HIGH VOLTAGE CONNECTIONS SHALL BE PERFORMED BY THE BY EC WITH THE LOW VOLTAGE WORK BY AVC.

H. ALL AUDIO CABLING AND TERMINATIONS SHALL UTILIZE THE THREE WIRE "BALANCED" PROFESSIONAL AUDIO INDUSTRY STANDARD WHEREVER POSSIBLE. STEREO AUDIO, THOUGH NOT ALWAYS DETAILED IS REQUIRED.

I. ALL AV EQUIPMENT FURNISHED AND INSTALLED BY AVC UNLESS SPECIFIED OTHERWISE.

J. AVC SHALL INSTALL EACH CEILING LOUDSPEAKER OR LOUDSPEAKER CLUSTER WITH A SEISMIC RESTRAINING SYSTEM PER ALL LOCAL, STATE AND FEDERAL CODES.

K. BASED ON SITE CONDITIONS, THE CONTRACTOR SHALL FIELD VERIFY THE PROJECTION SCREEN IMAGE SIZE AS WELL AD THE PHYSICAL SITE INSTALLATION LOCATIONS PRIOR TO SHOP DRAWING SUBMITTAL, PURCHASE AND INSTALLATION. IN CASES WHEN THE SCREENS ARE PBO THE CONTRACTOR SHALL VERIFY THE VALIDITY OF THE SCREEN SIZE AND IMMEDIATELY CONTACT THE DESIGN TEAM IF VARIANCES OR DEFICIENCIES HAVE BEEN FOUND WHERE THERE IS A MISMATCH IN THE SCREEN ASPECT RATIO AND THE NATIVE PROJECTOR RESOLUTION

L. EQUIPMENT AND SIGNAL FLOW SHOWN IS OF A CONCEPTUAL NATURE. AVC SHALL PROVIDE ALL NECESSARY INCIDENTAL ELECTRONICS AND EQUIPMENT SUCH THAT A TURN-KEY SOLUTION IS INSTALLED AND READY FOR THE IMMEDIATE USAGE. ITEMS SUCH AS BALUNS, POWER SUPPLIES, CABLE MANAGEMENT ACCESSORIES, SMALL LOCAL ETHERNET ROUTERS ETCETERA SHALL BE INCLUDED IN THE BASE SCOPE. SUBMIT QUESTIONS FOR CLARIFICATION PRIOR TO YOUR RETURN AS MONIES SHALL NOT BE AVAILABLE FOR ITEMS NOT ACCOUNTED FOR IN YOUR DOCUMENTATION. NO EXCEPTIONS.

M. AVC SHALL CLOSELY COORDINATE WITH THE TELEDATA CONTRACTOR ALL DATA DROP LOCATIONS AND MOUNTING HEIGHTS AS NECESSARY.

N. AVC SHALL CLOSELY COORDINATE WITH PARK IT STAFF TO PROCURE THE NECESSARY NETWORK ACCESS, IP ADDRESSES ETCETERA REQUIRED FOR THIS PROJECT.

O. AV CONTRACTOR SHALL PROVIDE A TURN-KEY THE DEDICATED ETHERNET NETWORK FOR THIS PROJECT INCLUDING BUT NOT LIMITED TO SWITCHES,PATCH-BAYS, PATCH CABLES ETCETERA.

COLORADO REGISTERED PROFESSIONAL ENGINEER JON BROOKS 35717 01/08/2026

AE FIRM PRIME: OTAK, INC. REDMOND, WA SUBCONTRACTOR: AE DESIGN DENVER, CO	DESIGNED: AE DESIGN CADD TW/RS/BJLV TECH REVIEW: JM/JEB/MS DATE: 01/16/2026	SUB SHEET NO. T500	TITLE OF SHEET AV ONE-LINES REHABILITATE KAWUNEECHE VISITOR CENTER ROCKY MOUNTAIN NATIONAL PARK	DRAWING NO. 121 165639 PMIS/PKG NO. 326235 SHEET 156 OF 177

1/8/2026 2:58:51 PM Autodesk Docs://2024-260 NPS ROMO Kawuneeche VC DD-CA wOtak/NPS ROMO KAWUEECHE VISITOR CENTER - ELECTRICAL.rvt

1/8/2026 2:58:51 PM Autodesk Docs://2024-260 NPS ROMO Kawuneeche VC DD-CA wOtak/NPS ROMO KAWUEECHE VISITOR CENTER - ELECTRICAL.rvt

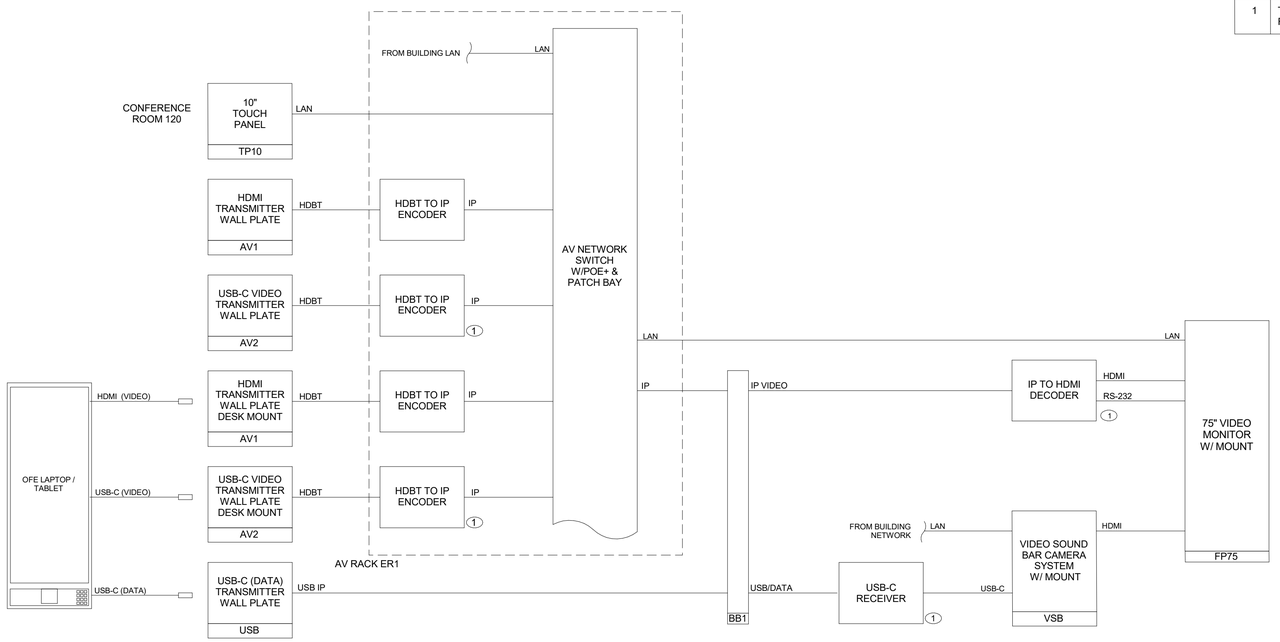

1
T501
AV ONE-LINE CONFERENCE ROOM

KEYNOTE LEGEND	
KEY VALUE	
1	THIS DEVICE IS MOUNTED INSIDE THE FLAT PANEL BACK BOX BB1.

GENERAL NOTES:

1. ALL DATA PATCH CABLES REQUIRED TO CONNECT AN AV DEVICE TO A DATA NETWORK OUTLET SHALL BE PROVIDED BY THE AVC AND SHALL BE OF EXACTLY THE SAME CATEGORY CLASS (OR BETTER) AS THE INCOMING CABLES, I.E. A SHIELDED CAT6A INCOMING CABLES TO THE PATCH BAY SHALL REQUIRE A SHIELDED CAT6A RATED PATCH CABLE
2. AVC SHALL PROVIDE ALL REQUIRED SPECIALIZED/CUSTOM CABLES PROVIDING THE PARK WITH A TURN-KEY SOLUTION.
3. AVC SHALL SUPPLY AND UTILIZE RS-485/422/232 BALUNS FOR LOW VOLTAGE CONTROL APPLICATIONS ETCETERA AS DISTANCE LIMITATIONS REQUIRE.
4. AVC MUST UTILIZE THE 274100 SPECIFICATION SECTION IN CONJUNCTION WITH THESE DRAWINGS TO FULLY UNDERSTAND THE SCOPE OF WORK AND SYSTEM FUNCTIONALITY REQUIRED FOR THIS PROJECT.
5. AVC SHALL VERIFY AND COORDINATE ALL INFRASTRUCTURE REQUIREMENTS, I.E. CONDUIT, PULL, JOB AND BACK BOXES ETCETERA WITH EC PRIOR TO THE COMPLETION OF ELECTRICAL ROUGH-IN PHASE. IMMEDIATELY BRING DISCREPANCIES TO THE ATTENTION OF THE EC AND THE AV CONSULTANT.
6. PROVIDE QUANTITIES AS SHOWN ELSEWHERE ON THE DRAWINGS, AS CALLED FOR IN THE SPECIFICATIONS, AND/OR AS NECESSARY FOR COMPLETE AND FULLY OPERATIONAL SYSTEM.
7. ALL HIGH VOLTAGE CONNECTIONS SHALL BE PERFORMED BY THE BY EC WITH THE LOW VOLTAGE WORK BY AVC.
8. ALL AUDIO CABLING AND TERMINATIONS SHALL UTILIZE THE THREE WIRE "BALANCED" PROFESSIONAL AUDIO INDUSTRY STANDARD WHEREVER POSSIBLE. STEREO AUDIO, THOUGH NOT ALWAYS DETAILED IS REQUIRED.
9. ALL AV EQUIPMENT FURNISHED AND INSTALLED BY AVC UNLESS SPECIFIED OTHERWISE.
10. AVC SHALL INSTALL EACH CEILING LOUDSPEAKER OR LOUDSPEAKER CLUSTER WITH A SEISMIC RESTRAINING SYSTEM PER ALL LOCAL, STATE AND FEDERAL CODES.
11. BASED ON SITE CONDITIONS, THE CONTRACTOR SHALL FIELD VERIFY THE PROJECTION SCREEN IMAGE SIZE AS WELL AD THE PHYSICAL SITE INSTALLATION LOCATIONS PRIOR TO SHOP DRAWING SUBMITTAL, PURCHASE AND INSTALLATION. IN CASES WHEN THE SCREENS ARE PBO THE CONTRACTOR SHALL VERIFY THE VALIDITY OF THE SCREEN SIZE AND IMMEDIATELY CONTACT THE DESIGN TEAM IF VARIANCES OR DEFICIENCIES HAVE BEEN FOUND WHERE THERE IS A MISMATCH IN THE SCREEN ASPECT RATIO AND THE NATIVE PROJECTOR RESOLUTION
12. EQUIPMENT AND SIGNAL FLOW SHOWN IS OF A CONCEPTUAL NATURE. AVC SHALL PROVIDE ALL NECESSARY INCIDENTAL ELECTRONICS AND EQUIPMENT SUCH THAT A TURN-KEY SOLUTION IS INSTALLED AND READY FOR THE IMMEDIATE USAGE. ITEMS SUCH AS BALUNS, POWER SUPPLIES, CABLE MANAGEMENT ACCESSORIES, SMALL LOCAL ETHERNET ROUTERS ETCETERA SHALL BE INCLUDED IN THE BASE. SUBMIT QUESTIONS FOR CLARIFICATION PRIOR TO YOUR RETURN AS MONIES SHALL NOT BE AVAILABLE FOR ITEMS NOT ACCOUNTED FOR IN YOUR DOCUMENTATION. NO EXCEPTIONS.
13. AVC SHALL CLOSELY COORDINATE WITH THE TELEDATA CONTRACTOR ALL DATA DROP LOCATIONS AND MOUNTING HEIGHTS AS NECESSARY.
14. AVC SHALL CLOSELY COORDINATE WITH PARK IT STAFF TO PROCURE THE NECESSARY NETWORK ACCESS, IP ADDRESSES ETCETERA REQUIRED FOR THIS PROJECT.
15. AV CONTRACTOR SHALL PROVIDE A TURN-KEY THE DEDICATED ETHERNET NETWORK FOR THIS PROJECT INCLUDING BUT NOT LIMITED TO SWITCHES,PATCH-BAYS, PATCH CABLES ETCETERA.

COLORADO REGISTERED PROFESSIONAL ENGINEER 35717 01/08/2026

AE FIRM	DESIGNED:	SUB SHEET NO.	TITLE OF SHEET	DRAWING NO.
PRIME: OTAK, INC. REDMOND, WA	AE DESIGN	T501	AV ONE-LINES	121 / 165639
SUBCONTRACTOR: AE DESIGN DENVER, CO	CADD TW/RS/BJLV		REHABILITATE KAWUNEECHE VISITOR CENTER ROCKY MOUNTAIN NATIONAL PARK	PMIS/PKG NO. 326235
	TECH REVIEW: JM/JEB/MS			SHEET 157 OF 177
	DATE: 01/16/2026			

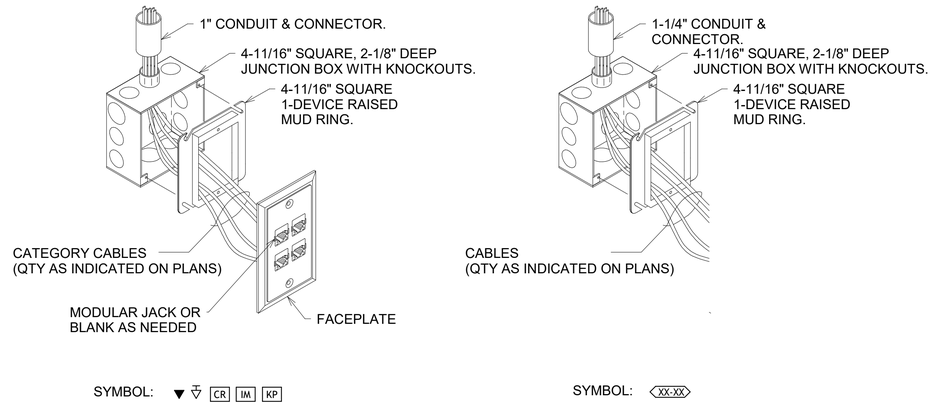

1 T600 TECHNOLOGY SYSTEMS OUTLETS AND CONDUIT

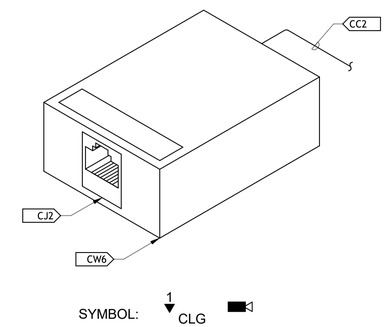

2 T600 1 PORT SURFACE MOUNT BOX

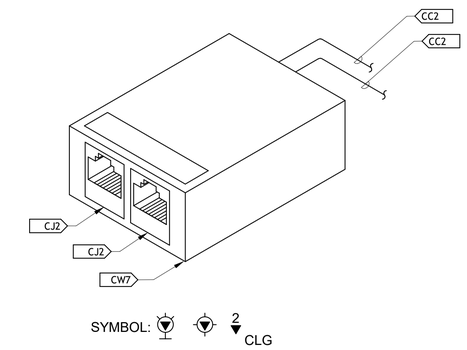

3 T600 2 PORT SURFACE MOUNT BOX

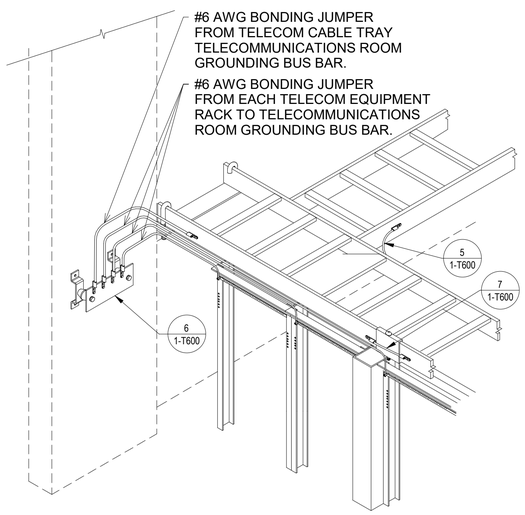

4 T600 TELECOMMUNICATIONS GROUNDING SYSTEM OVERVIEW ER/TR ONLY

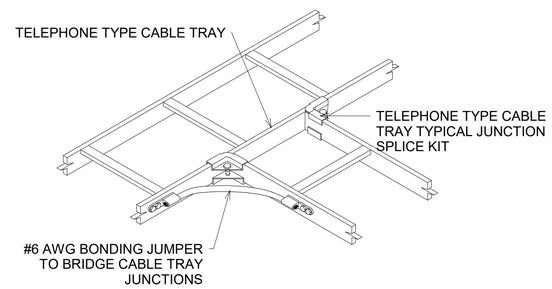

5 T600 TYPICAL CABLE TRAY JUNCTION GROUNDING DETAILS ER/TR ONLY

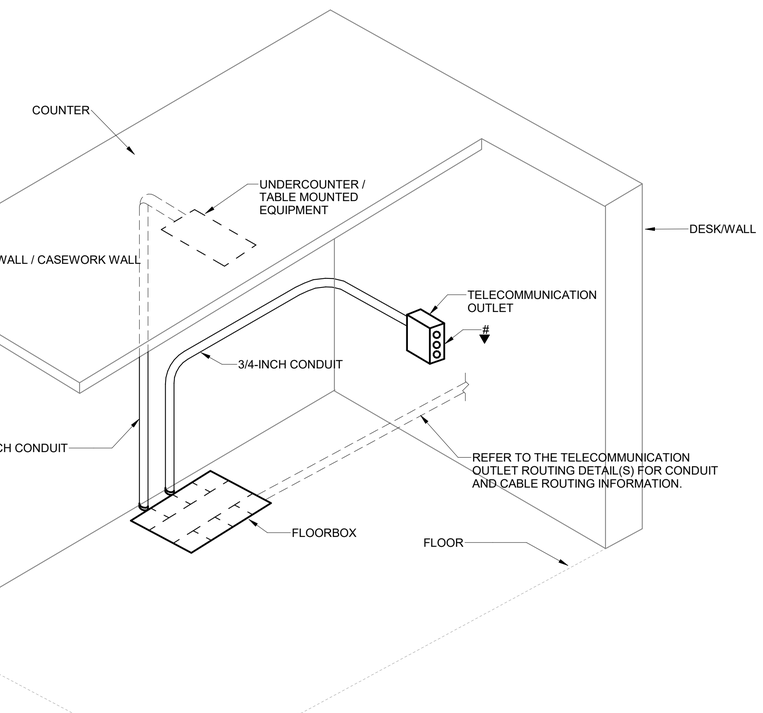

NOTES:
1. A MAX OF (14) CAT6 CABLES / (7) CAT6A CABLES SHALL BE ROUTED THROUGH A 1-1/4-INCH CONDUIT.
2. A MAX OF (8) CAT6 CABLES / (4) CAT6A CABLES SHALL BE ROUTED THROUGH A 1-INCH CONDUIT.
3. CONFIGURATIONS AND QUANTITIES SHOWN ARE FOR REFERENCE ONLY. PRECISE COUNTS,QUANTITIES, AND ROUTINGS SHALL BE BASED ON DRAWINGS AND IN-FIELD COORDINATION.
4. HEIGHT OF NETWORK TERMINATED OUTLETS SHALL BE AS INDICATED ON DRAWINGS. HEIGHT OF JUNCTION OUTLET ('FF' OUTLET) SHALL BE FIELD COORDINATED.

8 T600 FURNITURE FEEDTHROUGH OUTLETS AT CASEWORK/HALFWALL

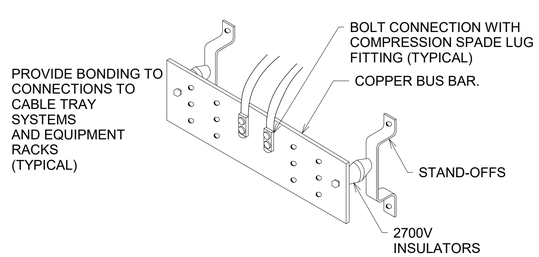

6 T600 TELECOMMUNICATIONS GROUNDING BUS BAR (TYPICAL)

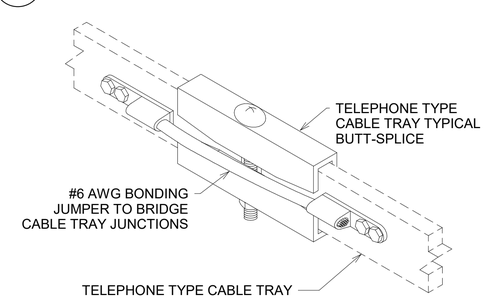

7 T600 TYPICAL CABLE TRAY GROUNDING DETAILS ER/TR ONLY

COLORADO REGISTERED PROFESSIONAL ENGINEER 35717 01/08/2026

AE FIRM PRIME: OTAK, INC. REDMOND, WA SUBCONTRACTOR: AE DESIGN DENVER, CO	DESIGNED: AE DESIGN CADD TW/RS/BJLV TECH REVIEW: JM/JEB/MS DATE: 01/16/2026	SUB SHEET NO. T600	TITLE OF SHEET TECHNOLOGY DETAILS REHABILITATE KAWUNEECHE VISITOR CENTER ROCKY MOUNTAIN NATIONAL PARK

DRAWING NO. 121 165639
PMIS/PKG NO. 326235
SHEET 158 OF 177

1/8/2026 2:58:51 PM Autodesk Docs://2024-260 NPS ROMO Kawuneeche VC DD-CA wOtak/NPS ROMO KAWUEECHE VISITOR CENTER - ELECTRICAL.rvt

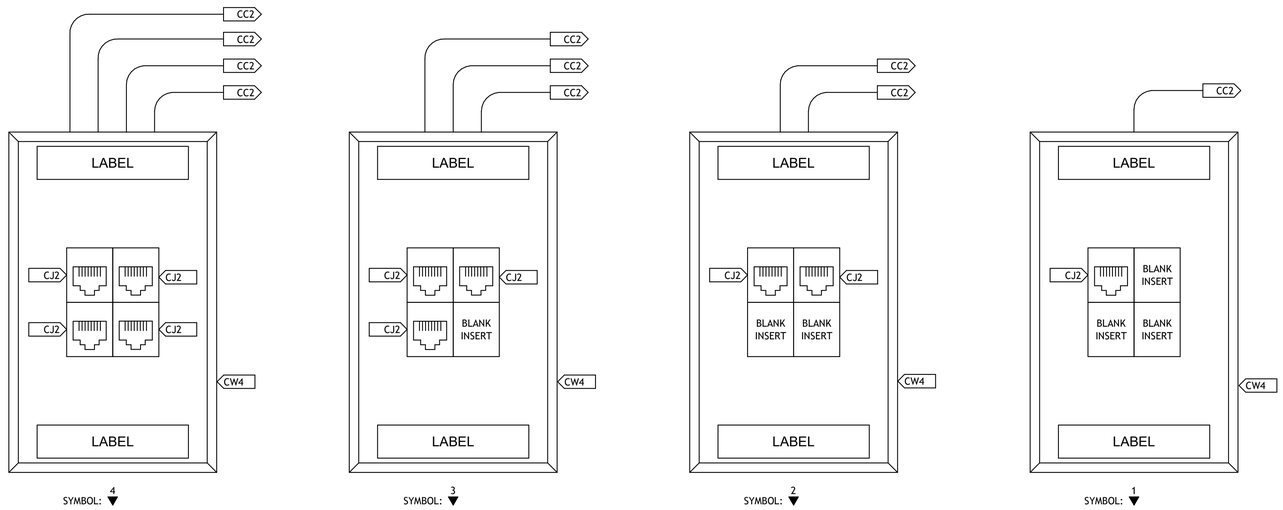

1 T601 TELECOMMUNICATION OUTLET FACEPLATE DETAIL

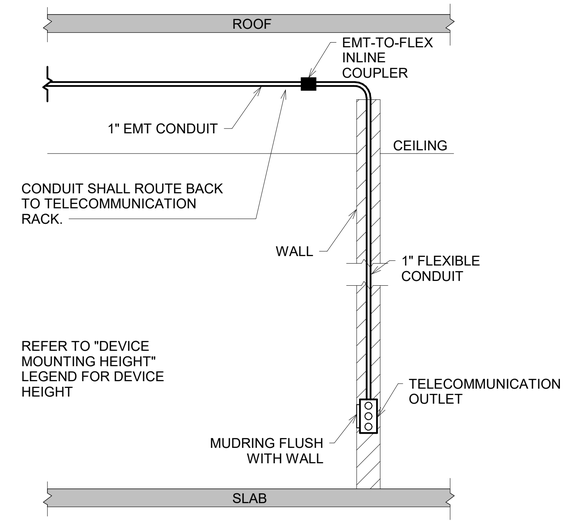

2 T601 TECHNOLOGY OUTLET ROUTING - EXISTING WALL

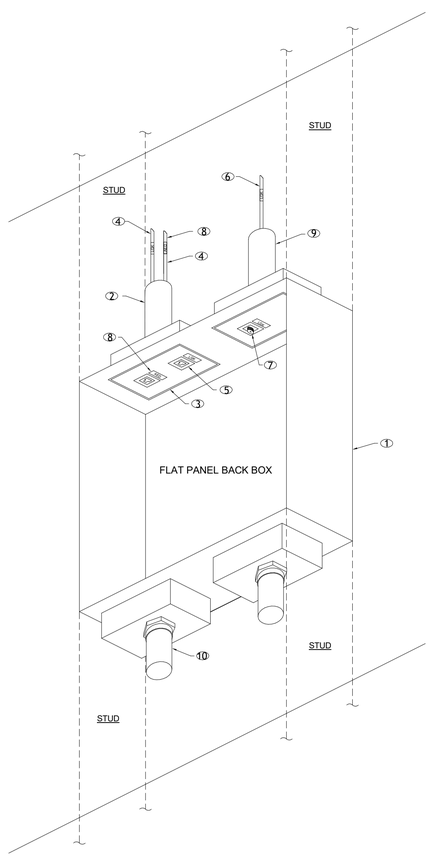

3 T601 AUDIO VIDEO DETAIL - FLAT PANEL BACKBOX - BB1

GENERAL NOTES	
1.	CONTRACTOR SHALL PROVIDE CONDUITS THROUGH WALLS AND ACROSS INACCESSIBLE CEILING SPACES TO ENSURE UNOBSTRUCTED PATHWAY BACK TO NEAREST COMM ROOM.
2.	CONDUITS AS THEY ARE SHOWN ENTERING THE FLAT PANEL BACK BOX ARE FOR ILLUSTRATIVE PURPOSES ONLY. IT IS POSSIBLE THAT CONDUITS MAY ENTER FROM A DIFFERENT LOCATION BASED ON THE PROJECT SPECIFICS, I.E. CONDUITS MAY ENTER FROM THE SIDES, AND ADDITIONAL CONDUITS MAY BE ROUTED TO EITHER THE TOP OR BOTTOM OF THE BOX AS DETERMINED BY THE EC / AVC.
3.	DRAWING NOT TO SCALE.

KEYNOTE LEGEND	
KEY VALUE	
1.	BACK-BOX: SHOWN FOR REFERENCE ONLY. REFER TO AV DRAWINGS FOR REQUIREMENTS. COORDINATE HEIGHT WITH ARCHITECTURAL SO BOX WILL BE HIDDEN BY DISPLAY.
2.	CONDUIT: PROVIDE (1) 1" CONDUIT ROUTED TO NEAREST COMMUNICATIONS ROOM OR IT RACK.
3.	FACE PLATE: PROVIDE MODULAR 2-PORT PLATE.
4.	DATA CABLE: PROVIDE (2) 4-PAIR CAT. 6A (AUGMENTED) STP CABLE ORIGINATING FROM THE NEAREST TELE-DATA ROOM. OR IT RACK.
5.	DATA TERMINATIONS: PROVIDE CAT. 6A RJ45 TYPE MODULAR JACK INTERCONNECTED TO CAT. 6A UTP CABLE PER EIA/TIA-T568B.
6.	COAXIAL CABLE: SHOWN FOR REFERENCE ONLY. PROVIDED BY OTHERS. REFER TO AV DRAWINGS FOR MORE INFORMATION.
7.	COAXIAL TERMINATION: SHOWN FOR REFERENCE ONLY. PROVIDED BY OTHERS. REFER TO AV DRAWINGS FOR MORE INFORMATION.
8.	LABELS: PROVIDE WHITE LABELS WITH BLACK TEXT TO NOTE STATION ID (YYY), TERMINATION ID (ZZZ) AND CABLE ID (XXX). REFER TO TYPICAL DEVICE LABELING DETAIL FOR ADDITIONAL REQUIREMENTS.
9.	AV: PROVIDE (1) 1.00" CONDUIT STUBBED UP TO ACCESSIBLE CEILING SPACE (FUTURE).
10.	POWER: POWER RECEPTACLES AND CONDUIT SHOWN FOR REFERENCE ONLY. EC TO FLUSH MOUNT AC DUPLEX IN BACK BOX AND SIZE CONDUIT FOR POWER AS REQUIRED.

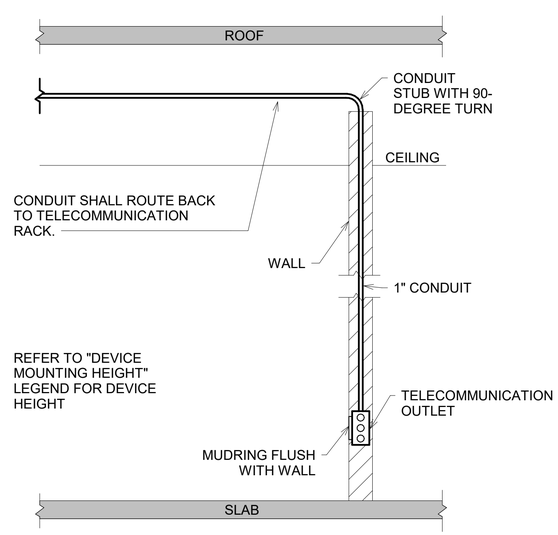

4 T601 TECHNOLOGY OUTLET ROUTING - NEW WALL

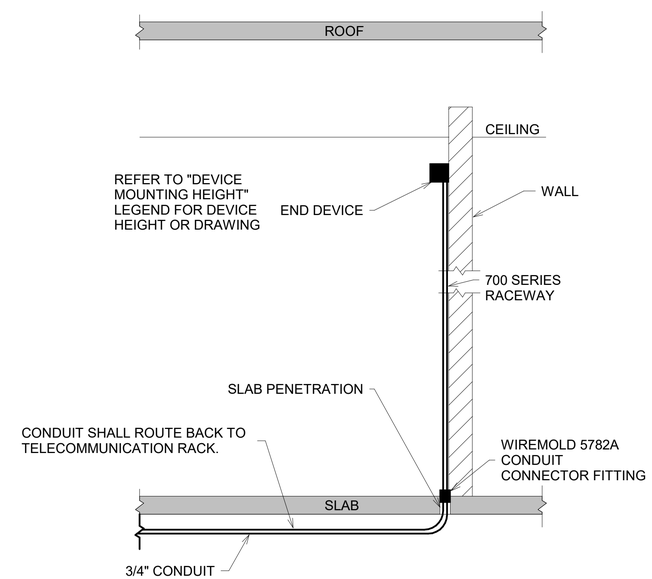

5 T601 CONDUIT TO WIREMOLD TRANSITION

COLORADO REGISTERED PROFESSIONAL ENGINEER 35717 01/08/2026

AE FIRM	DESIGNED:	SUB SHEET NO.	TITLE OF SHEET	DRAWING NO.
PRIME: OTAK, INC. REDMOND, WA	AE DESIGN	T601	TECHNOLOGY DETAILS	121 165639
SUBCONTRACTOR: AE DESIGN DENVER, CO	CADD TW/RS/BJLV		REHABILITATE KAWUNEECHE VISITOR CENTER ROCKY MOUNTAIN NATIONAL PARK	PMIS/PKG NO. 326235
	TECH REVIEW: JM/JEB/MS			SHEET 159 OF 177
	DATE: 01/16/2026			

1/8/2026 2:58:51 PM Autodesk Docs://2024-260 NPS ROMO Kawuneeche VC DD-CA wOtak/NPS ROMO KAWUEECHE VISITOR CENTER - ELECTRICAL.rvt

Autodesk Docs://2024-260 NPS ROMO Kawuneeche VC DD-CA wOtak/NPS ROMO KAWUEECHE VISITOR CENTER - ELECTRICAL.rvt

1/8/2026 2:58:52 PM

CEILING COORDINATION

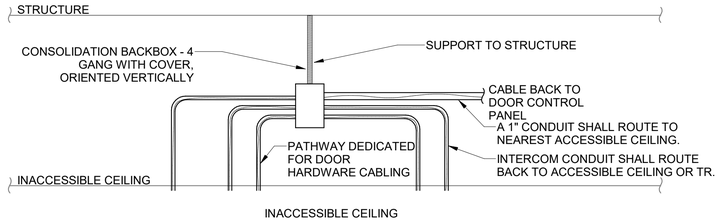

DOOR COORDINATION

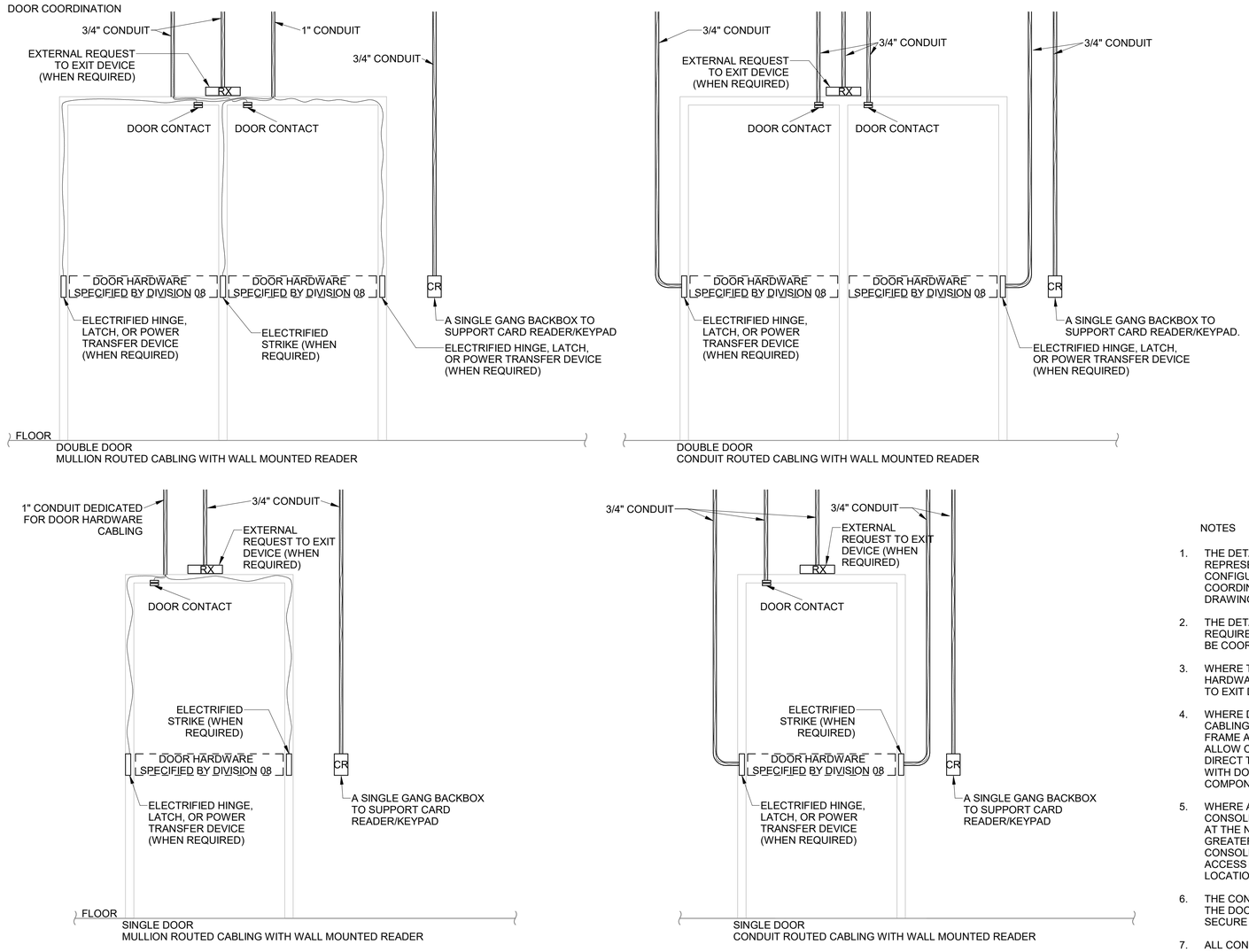

1 T602 DOOR ROUGH-IN: ACCESS CONTROLLED DOORS WITH CARD READERS

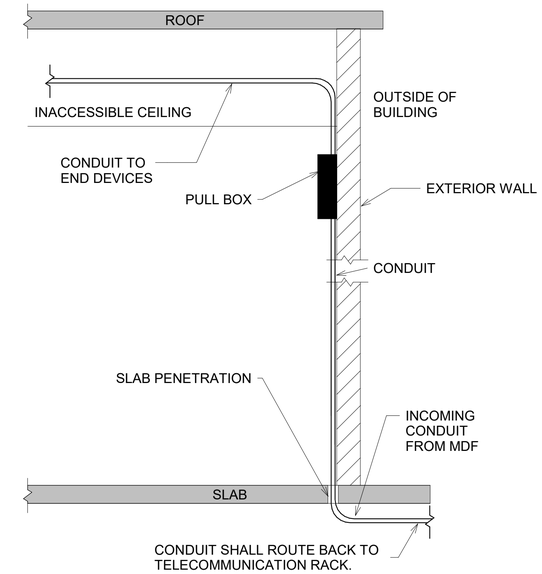

2 T602 CONDUIT TO WIREMOLD TRANSITION

NOTES

1. THE DETAILS HEREIN ARE DIAGRAMMATIC IN NATURE AND DO NOT REPRESENT A SPECIFIC INSTANCE. THE DOOR TYPE, DOOR CONFIGURATION, AND OTHER MISCELLANEOUS INFORMATION SHALL BE COORDINATED WITH THE DIVISION 08 SPECIFICATIONS, ARCHITECTURAL DRAWINGS, AND TECHNOLOGY DRAWINGS.
2. THE DETAILS HEREIN REPRESENT TYPICAL INFRASTRUCTURE REQUIREMENTS. THE SPECIFIC ROUTING OF CONDUIT AND CABLING SHALL BE COORDINATED FOR EACH ACCESS POINT LOCATION.
3. WHERE THE REQUEST TO EXIT DEVICE/FUNCTION IS INTEGRAL TO DOOR HARDWARE COMPONENTS, CONDUIT, BACKBOX, AND EXTERNAL REQUEST TO EXIT DEVICE SHOWN ARE NOT REQUIRED.
4. WHERE DOOR FRAME ALLOWS THE ROUTING OF CABLING, DOOR CONTACT CABLING AND DOOR HARDWARE CABLING SHALL ROUTE THROUGH DOOR FRAME AND CONSOLIDATED CONDUIT. WHERE DOOR FRAME DOES NOT ALLOW CABLE ROUTING, INDIVIDUAL 3/4-INCH CONDUITS SHALL ROUTE DIRECT TO EACH DEVICE FROM THE CONSOLIDATION BOX. COORDINATE WITH DOOR HARDWARE SPECIFICATIONS TO DETERMINE ELECTRIFIED COMPONENTS.
5. WHERE ACCESSIBLE CEILING IS WITHIN 50 FEET OF DOOR LOCATION, THE CONSOLIDATION BACKBOX SHALL BE LOCATED ABOVE ACCESSIBLE CEILING AT THE NEAREST POINT TO THE DOOR. WHERE AN ACCESSIBLE CEILING IS GREATER THAN 50 FEET AWAY FROM THE DOOR LOCATION, THE CONSOLIDATION BOX SHALL BE WALL OR CEILING MOUNTED BEHIND AN ACCESS PANEL. CONTRACTOR SHALL FIELD COORDINATE ACCESS PANEL LOCATION WITH ARCHITECT.
6. THE CONSOLIDATION BOX SHALL BE MOUNTED ON THE SECURE SIDE OF THE DOOR; IT SHALL BE PLACED SO THAT IT IS ONLY ACCESSIBLE FROM THE SECURE SIDE OF THE DOOR.
7. ALL CONDUITS AND CABLING SHALL BE RECESSED WITHIN THE WALL OR FRAME, NO SURFACE MOUNT INFRASTRUCTURE IS ACCEPTABLE UNLESS SPECIFICALLY NOTED.

COLORADO REGISTERED PROFESSIONAL ENGINEER 35717 01/08/2026

AE FIRM PRIME: OTAK, INC. REDMOND, WA SUBCONTRACTOR: AE DESIGN DENVER, CO	DESIGNED: AE DESIGN CADD TW/RS/BJLV TECH REVIEW: JM/JEB/MS DATE: 01/16/2026	SUB SHEET NO. T602	TITLE OF SHEET TECHNOLOGY DETAILS REHABILITATE KAWUNEECHE VISITOR CENTER ROCKY MOUNTAIN NATIONAL PARK	DRAWING NO. 121 165639 PMIS/PKG NO. 326235 SHEET 160 OF 177

EQUIPMENT SCHEDULES INFORMATION

ALL COMPONENTS SHOWN HEREIN SHALL BE CONSIDERED AS 'BASIS OF DESIGN'. THEY ARE SHOWN TO INDICATE GENERAL FUNCTION AND APPLICATION, IT IS ACCEPTABLE TO SUBMIT/PROVIDE COMPONENTS DETERMINED TO BE 'APPROVED EQUAL'.

POWER DISTRIBUTION DEVICES

KEY	DESCRIPTION	MANUFACTURER	PART NUMBER	COMMENTS
SP1	PDU, HORIZTONAL, 120V INPUT, (16) 5-20 OUTLETS	TRIPPLITE	PDUMH20ATS	

FIBER CONNECTIVITY

KEY	DESCRIPTION	MANUFACTURER	PART NUMBER	COMMENTS
FC1	12 STRAND SM (OS2) FIBER, ISP/OSP, PLENUM, LOOSE TUBE, ARMORED	PANDUIT	FSGP912Y	
FM2	FIBER CASSETTE, 12 STRAND SM, LC CONNECTOR	PANDUIT	FCS9N-12-10P	
FP1	1 RU FIBER PANEL	PANDUIT	FRME-1U	

COPPER CONNECTIVITY

KEY	DESCRIPTION	MANUFACTURER	PART NUMBER	COMMENTS
CC2	CAT 6A CABLE, PLENUM, UTP	COMMSCOPE	CS44P	
CC3	25-PAIR COPPER, CAT 5E, PLENUM, UTP	SUPERIOR ESSEX	51-478-48	
CJ2	CAT 6A JACK	COMMSCOPE	UKJ10G	
CX3	CAT6A PATCH CABLE	COMMSCOPE	UC1AAA2	
CX4	CAT6A PATCH CABLE - PLENUM RATED	COMMSCOPE	UC1AA22	
CB1	110-BLOCK, WALL MOUNTED	COMMSCOPE	569440-1	
CW4	4-PORT FACEPLATE, LABELED	COMMSCOPE	2111039-x	FINISH SHALL MATCH COLOR OF POWER RECEPTACLE DEVICE FACEPLATES
CW5	FLOOR BOX TELECOM FACEPLATE	SEE COMMENTS	SEE COMMENTS	FLOORBOX SPECIFIED BY ELECTRICAL. FACEPLATE COORDINATED WITH FLOORBOX MANUFACTURER.
CW6	SURFACE MOUNT BOX, (BISCUIT), PLENUM, 1 PORT	COMMSCOPE	SMB-1P-xxx PLENUM	SECURITY CAMERA LOCATIONS
CW7	SURFACE MOUNT BOX, (BISCUIT), PLENUM, 2 PORT	COMMSCOPE	SMB-2P-xxx PLENUM	WIRELESS ACCESSS POINT LOCATIONS
CP1	CAT 6A PATCH PANEL, 24 PORTS, 1RU, BLACK, FLAT	COMMSCOPE	UNP-6A-DM-1U-24	
CP2	CAT 6A PATCH PANEL, 48 PORTS, 2RU, BLACK, FLAT	COMMSCOPE	UNP-6A-DM-2U-48	

RACKS AND ACCESSORIES

KEY	DESCRIPTION	MANUFACTURER	PART NUMBER	COMMENTS
RR2	4-POST RACK, 7-FOOT IN HEIGHT, EIA. 19-INCH IN WIDTH, BLACK	CPI	50120-703	
RV2	VERTICAL WIRE MANAGER, 7-FOOT IN HEIGHT, 6-INCH IN WIDTH, BLACK DOUBLE-SIDED, FINGER STYLE FRONT, VERTICAL SECTION BACK	CPI	30162-703	
RL1	LADDER RUNWAY, 12-INCH WIDE	CPI	10250-712	
RA1	BUTT-SPLICE KIT	CPI	11301-701	
RA2	JUNCTION-SPLICE KIT	CPI	11302-701	
RA3	LADDER RUNWAY ELEVATION KIT	CPI	10506-706	
RA4	LADDER RUNWAY RADIUS DROP	CPI	12100-712	
RA5	LADDER RUNWAY CORNER BRACKET	CPI	11959-715	
RA6	UPPER TROUGH	CPI	13183-719	
RA7	HORIZONTAL WIRE MANAGER, 1U, 5" DEEP	CPI	30139-719	
RA8	HORIZONTAL WIRE MANAGER, 2U, 5" DEEP	CPI	30130-719	

PATHWAYS

KEY	DESCRIPTION	MANUFACTURER	PART NUMBER	COMMENTS
HH1	SMALL HANDHOLE - NON-TRAFFIC RATED	OLDCASTLE INFRASTRUCTURE	2436-36	TIER 15 RATED COVER

HORIZONTAL CABLE MATRIX

SYSTEM	CABLE KEY	CABLE COLOR	JACK KEY	JACK COLOR	PATCH CABLE COLOR: IT ROOM	PATCH CABLE COLOR: PREMISE	COMMENTS
NETWORK	CC2	BLUE	CJ2	BLUE	BLUE	BLUE	
VOICE	CC2	BLUE	CJ2	BLUE	BLUE	BLUE	
WIRELESS ACCESS POINT (WAP)	CC2	GREEN	CJ2	GREEN	GREEN	GREEN	
SECURITY	CC2	BLUE	CJ2	BLUE	BLUE	BLUE	
PAGING	CC2	BLUE	CJ2	BLUE	BLUE	BLUE	
AUDIO VISUAL	CC2	BLUE	CJ2	BLUE	BLUE	BLUE	

GROUNDING

KEY	DESCRIPTION	MANUFACTURER	PART NUMBER	COMMENTS
GB1	PRIMARY BONDING BUSBAR (PBB) COMPLIANT WITH ANSI/TIA-607	CPI	40153-020	
GS1	SURGE PROTECTION - 25 PAIR COPPER, CAT3/CAT5E	CIRCA MAX	1880ENA/NSC-6E	
GS2	SURGE PROTECTION - CAT6 / CAT6A	CIRCA MAX	604-75RJ	

BACKBONE CABLE MATRIX

ORIGINATION SPACE	TERMINATION SPACE	CABLE 1			CABLE 2			CABLE 3			
		KEY	COLOR	QUANTITY	KEY	COLOR	QUANTITY	KEY	COLOR	QUANTITY	COMMENTS
SERVER ROOM 116	GRAND LAKE ENTRANCE STATION	--	--	--	--	--	--	--	--		CABLE IS EXISTING, COORDINATE WITH CONTRACTING OFFICER. CABLE IS OWNER FURNISHED, CONTRACTOR INSTALLED (OFCI).
SERVER ROOM 116	MAINTENANCE FACILITY BUILDING	FC1	YELLOW	1	--	--	--	--	--		ESTIMATE LENGTH OF CABLE RUN SHALL BE 2,000 FEET.

SECURITY - ACCESS CONTROL SYSTEM (ACS)

KEY	DESCRIPTION	MANUFACTURER	PART NUMBER	COMMENTS
KP1	KEYPAD DOOR HARDWARE	-	-	REFER TO DIVISION 8 FOR DOOR HARDWARE
DC1	DOOR CONTACT (POSITION SWITCH), CONCEALED MOUNT	GE INTERLOGIX	2767-L	
RX1	REQUEST TO EXIT SENSOR	BOSCH	DS-160	

SECURITY - INTRUSION DETECTION SYSTEM (IDS)

KEY	DESCRIPTION	MANUFACTURER	PART NUMBER	COMMENTS
MD3	MOTION DETECTOR - WALL MOUNT, SHORT RANGE	BOSCH	DS860	DEVICE SHALL BE ALMOND COLOR.
KI1	SECURITY KEYPAD INTERFACE	BOSCH	B921C	
CP1	SECURITY CONTROL PANEL	BOSCH	9512G	
DB1	DURESS BUTTON - HOLD UP SWITCH	BOSCH	ISC-PB1-100	

SECURITY - VIDEO SURVEILLANCE SYSTEM (VSS)

KEY	DESCRIPTION	MANUFACTURER	PART NUMBER	COMMENTS
CAM2	BLACK DOME AND COVER - EXTERIOR RATED - FIXED DOME CAMERA, 5MP - IP66/IK10 RATED	AXIS	P3267-LVE	PROVIDE MOUNT AS INDICATED ON DETAILS AND AS REQUIRED PER LOCATION. CAMERA DOME AND COVER SHALL BE BLACK.
CAM3	INTERIOR RATED - FIXED DOME CAMERA, 5MP - IP66/IK10 RATED	AXIS	P3267-LV	PROVIDE MOUNT AS INDICATED ON DETAILS AND AS REQUIRED PER LOCATION
SV1	VIDEO SURVEILLANCE DEDICATED SWITCH	AXIS	T8524	EXISTING SERVER/WORKSTATION FOR VIDEO SURVEILLANCE SHALL BE RELOCATED FROM GRAND LAKE ENTRANCE STATION TO SERVER 116.

COLORADO REGISTERED PROFESSIONAL ENGINEER
TIMOTHY R. BROOKS
35717
01/08/2026

AE FIRM	DESIGNED:	SUB SHEET NO.	TITLE OF SHEET	DRAWING NO.
PRIME: OTAK, INC. REDMOND, WA SUBCONTRACTOR: AE DESIGN DENVER, CO	AE DESIGN CADD TW/RS/BJLV TECH REVIEW: JM/JEB/MS DATE: 01/16/2026	T700	TECHNOLOGY SCHEDULES REHABILITATE KAWUNEECHE VISITOR CENTER ROCKY MOUNTAIN NATIONAL PARK	121 165639 PMIS/PKG NO. 326235 SHEET 161 OF 177

1/8/2026 2:58:52 PM Autodesk Docs://2024-260 NPS ROMO Kawuneeche VC DD-CA wOtak/NPS ROMO KAWUEECHE VISITOR CENTER - ELECTRICAL.rvt

FIRE PROTECTION SYMBOL LIST

NOTE: This is a standard symbol list and not all items listed may be used.

Abbreviations

(A)	ABANDON IN PLACE
(E)	EXISTING
(F)	FUTURE
(N)	NEW
(R)	RELOCATE/RELOCATED LOCATION
(X)	DEMOLITION
AFF	ABOVE FINISHED FLOOR
AS	AUTOMATIC SPRINKLER
BOB	BOTTOM OF BEAM
BOD	BOTTOM OF DECK
BOP	BOTTOM OF PIPE
BOR	BOTTOM OF RISER
BV	BUTTERFLY VALVE
C	CENTER LINE
CV	CHECK VALVE
DDCV	DOUBLE DETECTOR CHECK VALVE ASSEMBLY
DN	DROP NIPPLE
EC	EXTENDED COVERAGE
EL	ELEVATION
F	FAHRENHEIT
FDC	FIRE DEPARTMENT CONNECTION
FF	FINISHED FLOOR
FFL	FLOOR FLANGE
FHC	FIRE HOSE CABINET
FHS	FIRE HOSE STATION
FS	FLOW SWITCH
FT	FEET
G	GRADE
GPM	GALLONS PER MINUTE
GV	GATE VALVE
H	HANGER
HSW	HORIZONTAL SIDE WALL
HV	HOSE VALVE
ID	INSIDE DIAMETER
IN	INCHES
MAX	MAXIMUM
MIN	MINIMUM
N&C	NIPPLE AND CAP
NIC	NOT IN CONTRACT
NO	NUMBER
NTS	NOT TO SCALE
OBJ	OPEN BAR JOIST
OD	OUTSIDE DIAMETER
OS & Y	OUTSIDE SCREW & YOKE
PIV	POST INDICATOR VALVE
PRV	PRESSURE REDUCING VALVE
PS	PRESSURE SWITCH
RM	ROOF MANIFOLD
RN	RISER NIPPLE
SB	SWAY BRACE
SF	SQUARE FEET
SOV	SHUT OFF VALVE
SP	STANDPIPE
SSP	STANDARD SPRAY PENDENT
SSU	STANDARD SPRAY UPRIGHT
TOB	TOP OF BEAM
TOP	TOP OF PIPE
TOR	TOP OF RISER
TOS	TOP OF STEEL
TS	TAMPER SWITCH
TYP	TYPICAL
UNO	UNLESS NOTED OTHERWISE

Control

- BELL/GONG
- CONTROL PANEL
- FLOW DETECTION SWITCH
- MONITOR SWITCH
- PRESSURE GAUGE
- TAMPER DETECTOR
- WATER MOTOR ALARM

Miscellaneous

- 1 — 2-WAY SWAY BRACE
- 1 — 4-WAY SWAY BRACE
- AUXILIARY DRAIN
- CONTINUATION OF PIPE
- COUPLING
- DEMOLITION PIPE
- DEMOLITION PIPE
- DRY HOSE STATION
- (14'-0") — ELEVATION ABOVE FINISHED FLOOR
- EXISTING PIPE
- FLANGED COUPLING
- FLEX — FLEXIBLE COUPLING
- GROOVED CAP
- GROOVED COUPLING
- H1 — HANGER (TEXT INDICATES TYPE)
- HYDRAULIC CALCULATION NODE
- NEW PIPE
- POINT OF CONNECTION
- RISER
- SCREWED CAP
- SCREWED PLUG
- UNION
- WET HOSE STATION

Valves

- ALARM CHECK VALVE, ELEVATION VIEW
- ALARM CHECK VALVE, PLAN VIEW
- ANGLE VALVE
- CHECK VALVE
- DELUGE VALVE
- DRY PIPE VALVE, PLAN VIEW
- INDICATING BUTTERFLY VALVE
- NON-RISING STEM VALVE
- PREACTION VALVE
- VALVE WITH TAMPER SWITCH

Water Service

- DOUBLE CHECK BACKFLOW PREVENTER (RP-TYPE)
- FIRE DEPARTMENT CONNECTION
- FREE STANDING F.D. CONNECTION
- O.S.&Y. VALVE
- POST INDICATOR VALVE

WATER FLOW INFORMATION

DATE OF REPORT/TEST	9-2024
LOCATION	VC ENTRANCE (NORTH)
MAIN SIZE	6 "
STATIC PRESSURE	81 PSI
RESIDUAL PRESSURE	52 PSI
FLOW AT RESIDUAL	715 GPM
COMMENTS:	
EXISTING HYDRANT FIELD FLOW TESTED	

MAXIMUM DISTANCE BETWEEN HANGERS (FT-IN)

STEEL PIPE	NOMINAL PIPE SIZE (IN)							
	1	1-1/4	1-1/2	2	2-1/2	3	4	6
	12-0	12-0	15-0	15-0	15-0	15-0	15-0	15-0

FOR STEEL PIPE, THE MAXIMUM LENGTH FOR UNSUPPORTED ARMOVER SHALL BE 2'-0". WHEN PRESSURE EXCEEDS 100 PSI, UNSUPPORTED LENGTH SHALL BE 1'-0".

DISTANCE FROM SPRINKLER TO HANGER

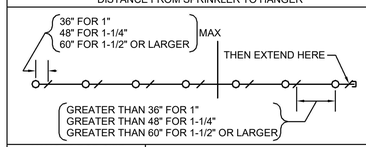

HANGER ROD SIZE

PIPE SIZE	DIA. OF ROD
UP TO AND INCLUDING 4"	3/8"
6" AND 8"	1/2"

NOTE: TYPICAL TICK MARKS AS SHOWN ON PIPING PLAN MAY NOT REFLECT ACTUAL FIELD INSTALLATION. FINAL HANGER INSTALLATION SHALL BE IN ACCORDANCE WITH THE REQUIREMENTS OF NFPA 13 CHAPTER 9.

GENERAL FIRE PROTECTION NOTES

A. SCOPE OF WORK:
- PROVIDE A WET-PIPE FIRE SPRINKLERS SYSTEM FOR THE ADMIN, VC AND EXHIBIT WINGS IN ACCORDANCE WITH NFPA 13, IBC/IFC AND NPS AHJ REQUIREMENTS. SYSTEM(S) TO BE FILLED WITH A UL-APPROVED ANTI-FREEZE (TYCO LFP+ OR SIMILAR).
  a. PROVIDE (1) SYSTEM WITH ASSOCIATED RP-BACKFLOW AND CONTROL VALVES LOCATED WITHIN THE ADMIN WING TO PROTECT BOTH ADMIN AND VC WINGS.
- PROVIDE A DRY-PIPE SPRINKLER SYSTEM FOR THE COVERED WALKWAY AND COMFORT STATION IN ACCORDANCE WITH NFPA 13, IBC/IFC AND NPS AHJ REQUIREMENTS. DRY-PIPE SYSTEM TO BE FILLED WITH SUPERVISORY NITROGEN.
  a. PROVIDE (1) SYSTEM WITH ASSOCIATED BACKFLOW AND CONTROL VALVE LOCATED WITHIN THE COMFORT STATION.
- PROVIDE A SINGLE INTERLOCK PREACTION SPRINKLER SYSTEM TO PROTECT SERVER ROOM INSTALLED IN ACCORDANCE WITH NFPA 13, IBC/IFC AND NPS AHJ REQUIREMENTS. PROVIDE WITH A DEDICATED RELEASE PANEL AND DETECTION DEVICES.

B. PROVIDE A FIRE DEPARTMENT CONNECTION (FDC). FDC LOCATED ON-SITE, REFER TO CIVIL FOR ADDITIONAL INFORMATION.

C. SEISMIC DESIGN CATEGORY-B. NO SEISMIC BRACING REQUIRED. REFER TO STRUCTURAL DRAWINGS FOR ADDITIONAL SITE/SEISMIC INFORMATION.

D. CONTRACTOR TO PROVIDE ALL REQUIRED HANGERS, AND THE LIKE IN ACCORDANCE WITH NFPA 13 REQUIREMENTS.

E. ALL ABOVE GROUND FIRE SPRINKLER PIPING SHALL BE SCHEDULE 40 PER NPS STANDARDS.

F. FIRE PROTECTION SYSTEM(S) SHALL BE DESIGNED BY SOMEONE MEETING THE FOLLOWING:
  a. NICET III OR HIGHER FOR WATER-BASED SYSTEMS.
  b. FIRE PROTECTION ENGINEER.
  c. AS APPROVED BY THE NPS AHJ.

G. FIRE PROTECTION SYSTEM(S) SHALL BE INSTALLED BY SOMEONE MEETING THE FOLLOWING:
  a. NICET II OR HIGHER FOR WATER-BASED SYSTEMS.
  b. FIRE PROTECTION ENGINEER.
  c. AS APPROVED BY THE AHJ.

SPRINKLER HEAD LEGEND

SYMBOL	DESCRIPTION	K-FACTOR	ORIFICE SIZE	RESPONSE	TEMP	COVERAGE	FINISH	ESCHUTCHEON	COUNT	COMMENTS
	CONCEALED PENDENT SPRINKLER	5.6	1/2"	Quick	165	Standard	WOOD GRAIN	FLAT, ROUND	14	COORDINATE FINISH TYPE WITH CO AT WOOD CEILINGS
	DRY BARREL SIDEWALL SPRINKLER	5.6	1/2"	Quick	205	Standard	CHROME	CHROME	7	
	HORIZONTAL SIDEWALL SPRINKLER	5.6	1/2"	Quick	165	Standard	WHITE POLY	NONE	2	INSTALL TIGHT TO BRANCH LINE PIPE
	RECESSED PENDENT SPRINKLER	5.6	1/2"	Quick	165	Standard	WHITE POLY	RECESSED, WHITE	47	
	DRY BARREL CONCEALED PENDENT SPRINKLER	5.6	1/2"	Quick	205	Standard	CHROME	FLAT, ROUND	22	
	UPRIGHT SPRINKLER	5.6	1/2"	Quick	165	Standard	BRASS	NONE	48	PROVIDE WITH METAL CAGE IN MECHANICAL SPACES

TOTAL SPRINKLERS: 140

HAZARD CLASSIFICATIONS

OCCUPANCY	DESCRIPTION	MAX COVERAGE	DESIGN DENSITY	REMOTE AREA
LIGHT HAZARD	VESTIBULES, HALLS, RESTROOMS, OFFICES, TELECOMMUNICATION ROOMS, EVES AND OVERHANGS WITH COMBUSTIBLE CONSTRUCTION AND NO COMBUSTIBLE BENEATH, EXHIBIT AREA.	225 SQ FT	0.10 GPM/SQ FT	1500 SQ FT
ORDINARY HAZARD GROUP 1	ELECTRICAL ROOMS, MECHANICAL ROOMS, JANITORS CLOSEST, MISC. STORAGE ROOMS	130 SQ FT	0.15 GPM/SQ FT	1500 SQ FT

APPLICABLE CODES:

A. 2024 INTERNATIONAL BUILDING CODE (IBC)
B. 2024 INTERNATIONAL FIRE CODE (IFC)
C. ARCHITECTURAL BARRIERS ACT ACCESSIBILITY STANDARDS (ABAAS)
D. 2022 NATIONAL FIRE ALARM AND SIGNALING CODE (NFPA 72)
E. NPS STRUCTURAL FIRE MANAGEMENT REFERENCE MANUAL 58 (RM #58)

SHEET INDEX

FP001 SYMBOL LIST AND GENERAL NOTES - FIRE PROTECTION
FP090 SITE PLAN - FIRE PROTECTION
FP101 OVERALL REFLECTED CEILING PLAN - FIRE PROTECTION
FP401 ENLARGED PLAN - ADMIN - FIRE PROTECTION
FP402 ENLARGED PLAN - AUDITORIUM & EXHIBIT - FIRE PROTECTION
FP403 ENLARGED PLAN - COMFORT STATION - FIRE PROTECTION
FP501 SECTIONS - FIRE PROTECTION
FP601 ADMIN SERVER ROOM - FIRE PROTECTION
FP701 DETAILS - FIRE PROTECTION

COLORADO LICENSED PROFESSIONAL ENGINEER NEWTON JAY KIRKLAND #0057398

AE FIRM PRIME: OTAK, INC. REDMOND, WA SUBCONTRACTOR: INTERFACE ENGINEERING PORTLAND, OR	DESIGNED: CK CADD CK TECH REVIEW: KA DATE: 01/16/2026	SUB SHEET NO. FP001	TITLE OF SHEET SYMBOL LIST AND GENERAL NOTES - FIRE PROTECTION REHABILITATE KAWUEECHE VISITOR CENTER ROCKY MOUNTAIN NATION PARK	DRAWING NO. 121 165639 PMIS/PKG NO. 326235 SHEET 162 OF 177

1/7/2026 11:47:16 AM Autodesk Docs://2024-260 NPS ROMO Kawuneeche VC DD-CA wOtak/2024260 NPS ROMO KAWUEECHE VISITOR CENTER_FLS_R24.rvt

GENERAL SHEET NOTES

A. REFER TO CIVIL DRAWINGS FOR ADDITIONAL SITE INFORMATION.

B. FIRE SPRINKLER SCOPE OF WORK TO START 5-FT OUT FROM BUILDING FOOTPRINT. CONTRACTOR TO PROVIDE ALL REQUIRED RESTRAINT JOINTS.

C. FREE-STANDING 2-PORT FDC TO SUPPLY ALL FIRE SPRINKLER SYSTEM(S). CHECK VALVE PROVIDED INSIDE AT EACH (2) FIRE RISER LOCATIONS.

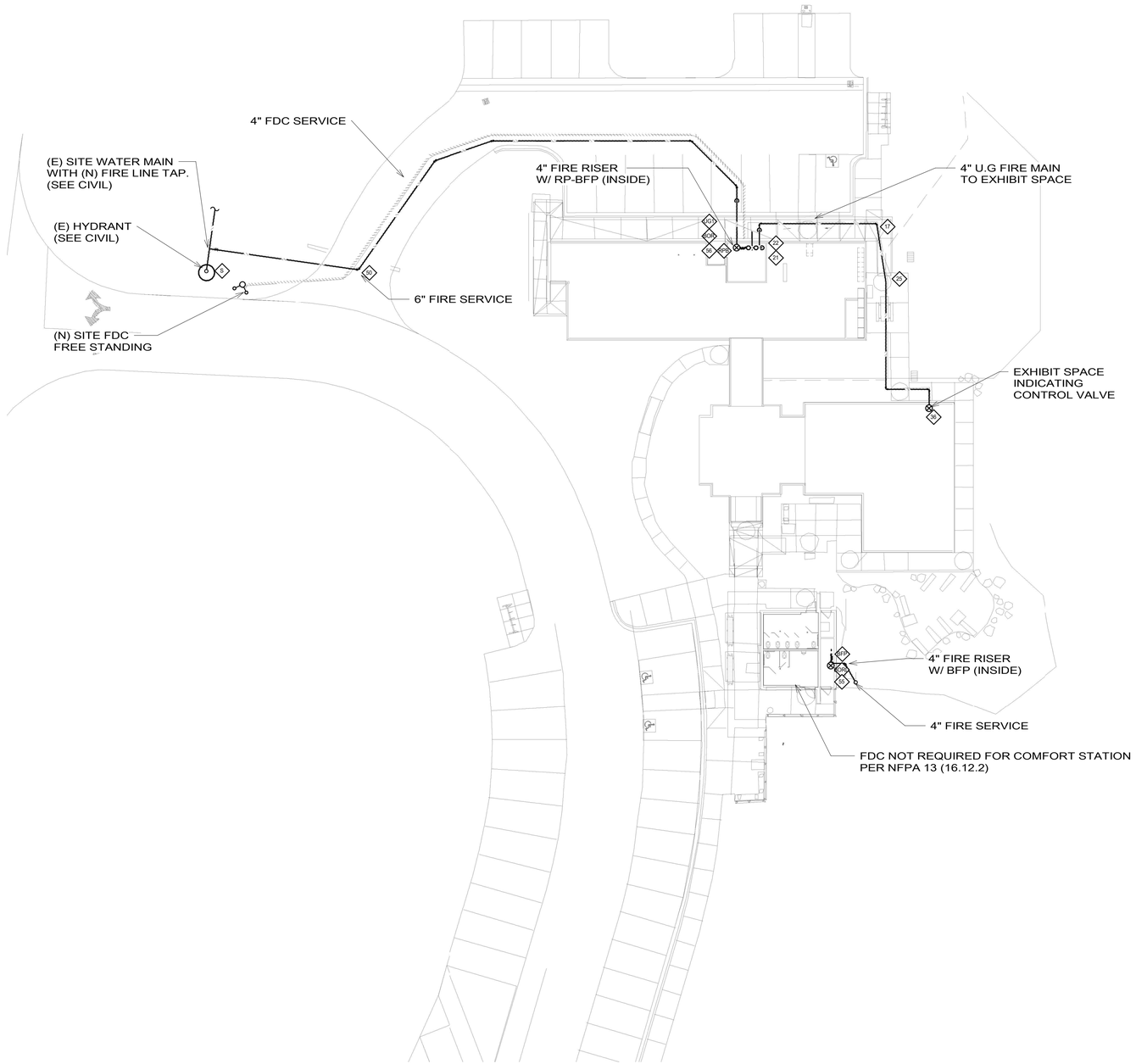

1 FP090 SITE PLAN - FIRE PROTECTION
SCALE A

SCALE: A 20 0 20 40 SCALE OF FEET

TRUE PLAN

COLORADO LICENSED
CLINTON JAY KIRKING
#0057390
PROFESSIONAL ENGINEER

AE FIRM	DESIGNED:	SUB SHEET NO.	TITLE OF SHEET	DRAWING NO.
PRIME: OTAK, INC. REDMOND, WA	CK	FP090	SITE PLAN - FIRE PROTECTION	121 165639
SUBCONTRACTOR: INTERFACE ENGINEERING PORTLAND, OR	CADD CK			PMIS/PKG NO. 326235
	TECH REVIEW: KA		REHABILITATE KAWUEECHE VISITOR CENTER ROCKY MOUNTAIN NATION PARK	SHEET 163 OF 177
	DATE: 01/16/2026			

1/7/2026 11:47:18 AM Autodesk Docs://2024-260 NPS ROMO Kawuneeche VC DD-CA wOtak/2024260 NPS ROMO KAWUEECHE VISITOR CENTER_FLS_R24.rvt

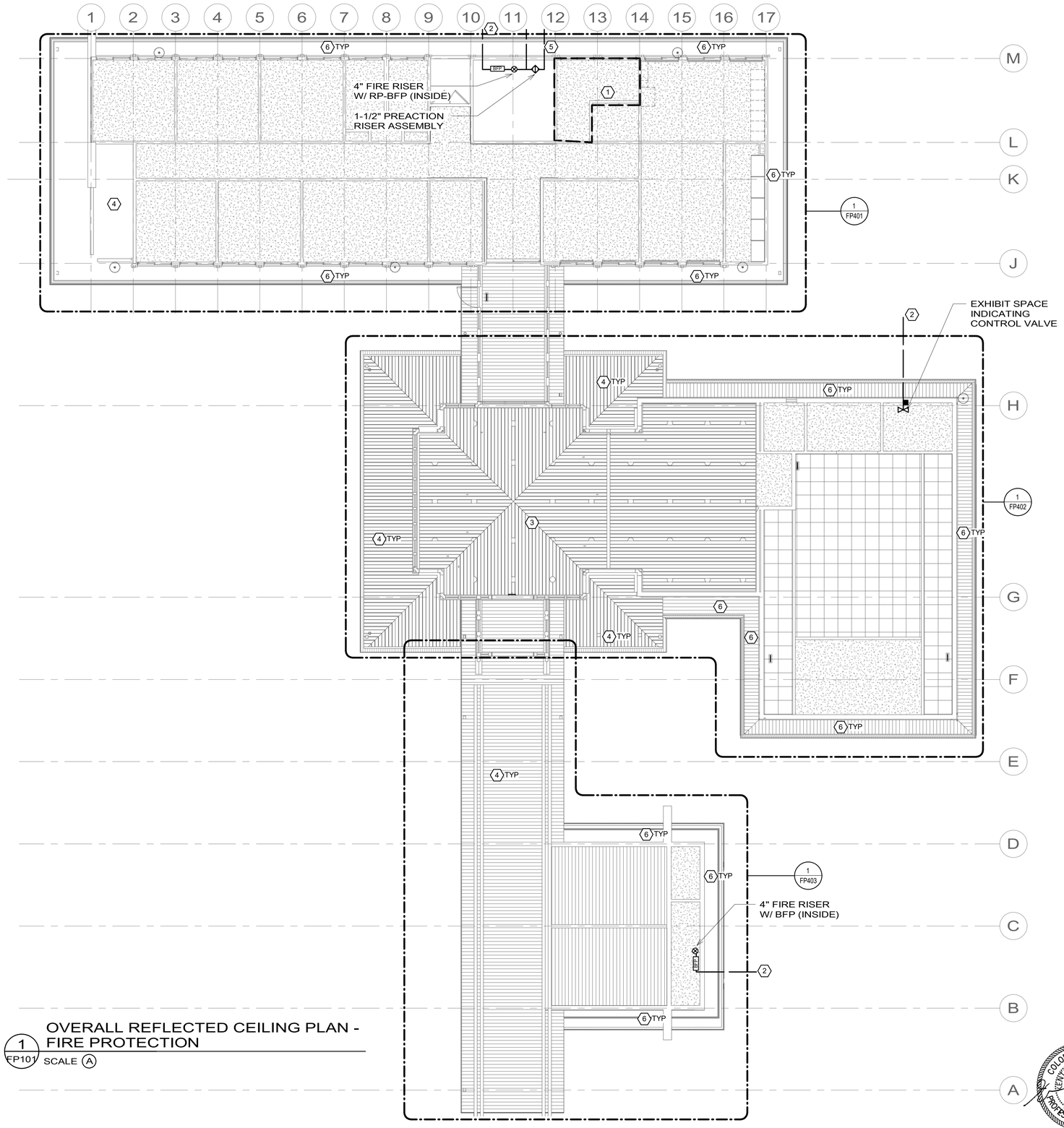

1 FP101 OVERALL REFLECTED CEILING PLAN - FIRE PROTECTION
SCALE (A)

SHEET KEYNOTES

1. PROVIDE PREACTION SPRINKLER SYSTEM FOR SERVER, REFER TO FP601 FOR RISER ASSEMBLY DETAIL.
2. REFER TO CIVIL WATER PLANS FOR SITE CONDITIONS AND INFORMATION.
3. PROVIDE CONCEALED TYPE PENDENT SPRINKLERS WITH COVER PLATES MATCHING THE CEILING TYPE.
4. PROVIDE DRY-TYPE SPRINKLERS PROTECTING EXTERIOR OVERHANGS 4-FT OR GREATER.
5. ROUTE 4" FIRE MAIN, UNDERGROUND TO SERVE VC/EXHIBIT WING. REFER TO CIVIL FOR SITE PIPING AND CONTINUATION.
6. SPRINKLER PROTECTION OMITTED FROM EXTERIOR EAVES OR OVERHANGS LESS THAN 4-FT IN WIDTH PER NFPA 13 (9.2.1.20).

SCALE: (A) 8 0 8 16 SCALE OF FEET

TRUE PLAN

COLORADO LICENSED
NEWTON JAY KIRWIN
#0057393
PROFESSIONAL ENGINEER

AE FIRM	DESIGNED:	SUB SHEET NO.	TITLE OF SHEET	DRAWING NO.
PRIME: OTAK, INC. REDMOND, WA	CK	FP101	OVERALL REFLECTED CEILING PLAN - FIRE PROTECTION	121 / 165639
SUBCONTRACTOR: INTERFACE ENGINEERING PORTLAND, OR	CADD: CK		REHABILITATE KAWUEECHE VISITOR CENTER ROCKY MOUNTAIN NATION PARK	PMIS/PKG NO. 326235
	TECH REVIEW: KA			SHEET 164 OF 177
	DATE: 01/16/2026			

1/7/2026 11:47:22 AM Autodesk Docs://2024-260 NPS ROMO Kawuneeche VC DD-CA wOtak/2024260 NPS ROMO KAWUEECHE VISITOR CENTER_FLS_R24.rvt

Hydraulic Information	
Remote Area Name	ADMIN - UPRIGHTS
Remote Area Size	1521 SF
Occupancy Classification	Light Hazard
Density	0.10 GPM/SF
K-Factor	5.213316
Flowing Heads	8 @ 17.60 + 4 @ 15.00
Head Coverage	225 (MAX) SF
Flow at Base of Riser	242.15 GPM
Pressure at Base of Riser	42.44 PSI
Flow at Source	342.15 GPM
Pressure at Source	46.35 PSI
Total Hose Streams	100.00 GPM
Safety Margin	+28.01 (37.67%)
Comments:	UPRIGHTS ABOVE CEILING. DARCY-WEISBACH FOR ANTI-FREEZE (TEMP = 0-F)
NFPA 13 - 22	

Hydraulic Information	
Remote Area Name	ADMIN - PENDENTS
Remote Area Size	917 SF
Occupancy Classification	Light Hazard
Density	0.10 GPM/SF
K-Factor	5.213316
Flowing Heads	9 @ 13.79 + 1 @ 16.50
Head Coverage	VARIES, AVG. 88 SF
Flow at Base of Riser	179.81 GPM
Pressure at Base of Riser	37.72 PSI
Flow at Source	279.81 GPM
Pressure at Source	40.96 PSI
Total Hose Streams	100.00 GPM
Safety Margin	+35.6 (46.5%)
Comments:	RA REDUCTION PER 19.2.3.2.3.1. (40%). DARCY-WEISBACH FOR ANTI-FREEZE (TEMP = 0-F)
NFPA 13 - 22	

SHEET KEYNOTES

1. PROVIDE UPRIGHT SPRINKLER PROTECTION FOR COMBUSTIBLE CONCEALED SPACE IN ACCORDANCE WITH NFPA 13.
2. ROUTE PIPING IN WILDERNESS AREA EXPOSED, BELOW CEILING.
3. PROVIDE DRY-TYPE FLEX PENDENT SPRINKLER TO SERVE EXTERIOR AREA. RIGID PIPE TO BE WITHIN BUILDING ENVELOPE.

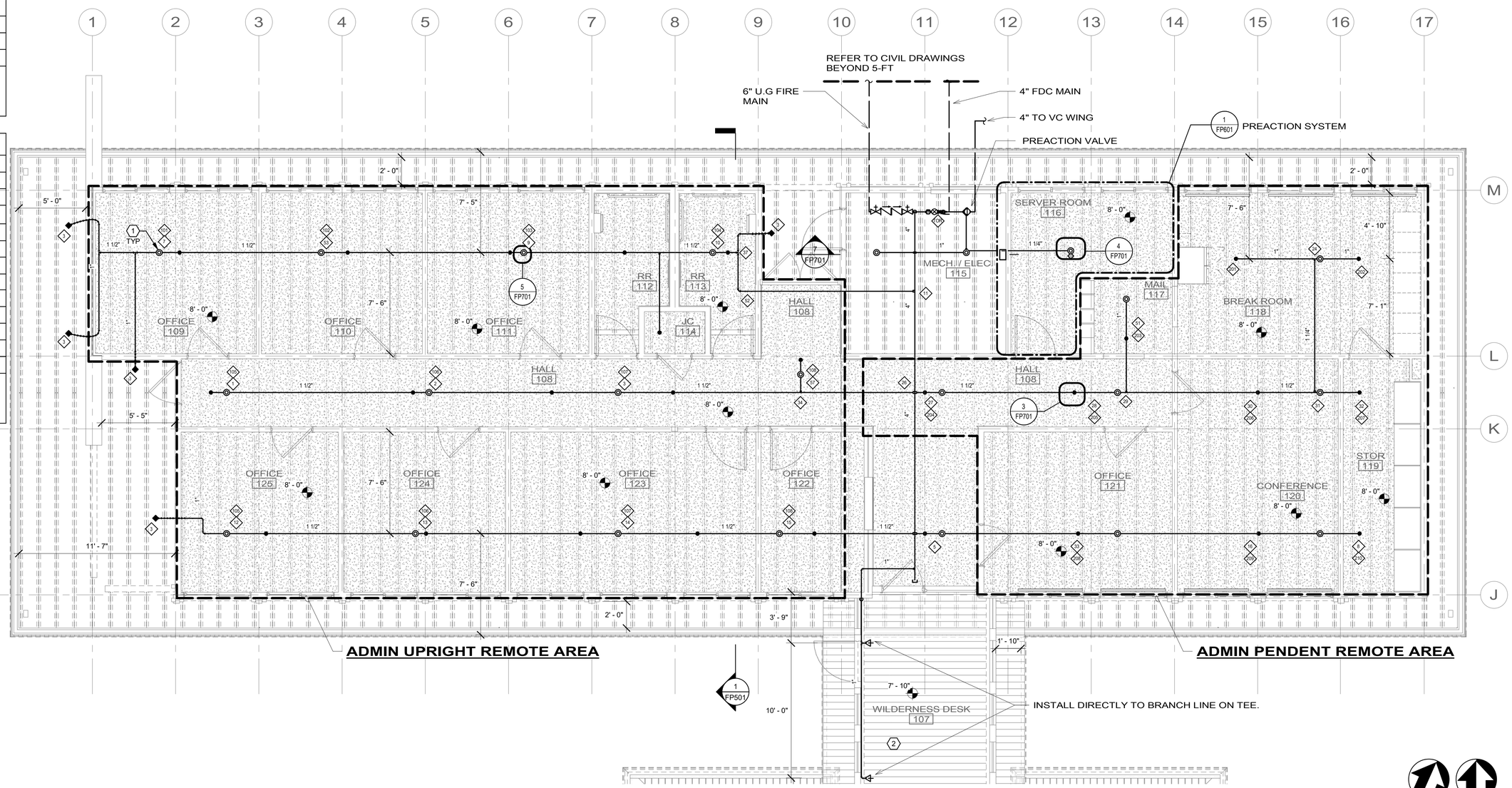

1 FP401 ENLARGED PLAN - ADMIN - FIRE PROTECTION
SCALE (A)

SCALE: (A) 4 0 4 8 SCALE OF FEET

TRUE PLAN

COLORADO LICENSED NEWTON JAY KIRAN #0057393 PROFESSIONAL ENGINEER

AE FIRM	DESIGNED:	SUB SHEET NO.	TITLE OF SHEET	DRAWING NO.
PRIME: OTAK, INC. REDMOND, WA	CK	FP401	ENLARGED PLAN - ADMIN - FIRE PROTECTION	121 / 165639
	CADD: CK			PMIS/PKG NO. 326235
SUBCONTRACTOR: INTERFACE ENGINEERING PORTLAND, OR	TECH REVIEW: KA		REHABILITATE KAWUEECHE VISITOR CENTER ROCKY MOUNTAIN NATION PARK	SHEET 165 OF 177
	DATE: 01/16/2026			

1/7/2026 11:47:27 AM Autodesk Docs://2024-260 NPS ROMO Kawuneeche VC DD-CA wOtak/2024260 NPS ROMO KAWUEECHE VISITOR CENTER_FLS_R24.rvt

Autodesk Docs://2024-260 NPS ROMO Kawuneeche VC DD-CA wOtak/2024260 NPS ROMO KAWUEECHE VISITOR CENTER_FLS_R24.rvt
1/7/2026 11:47:32 AM

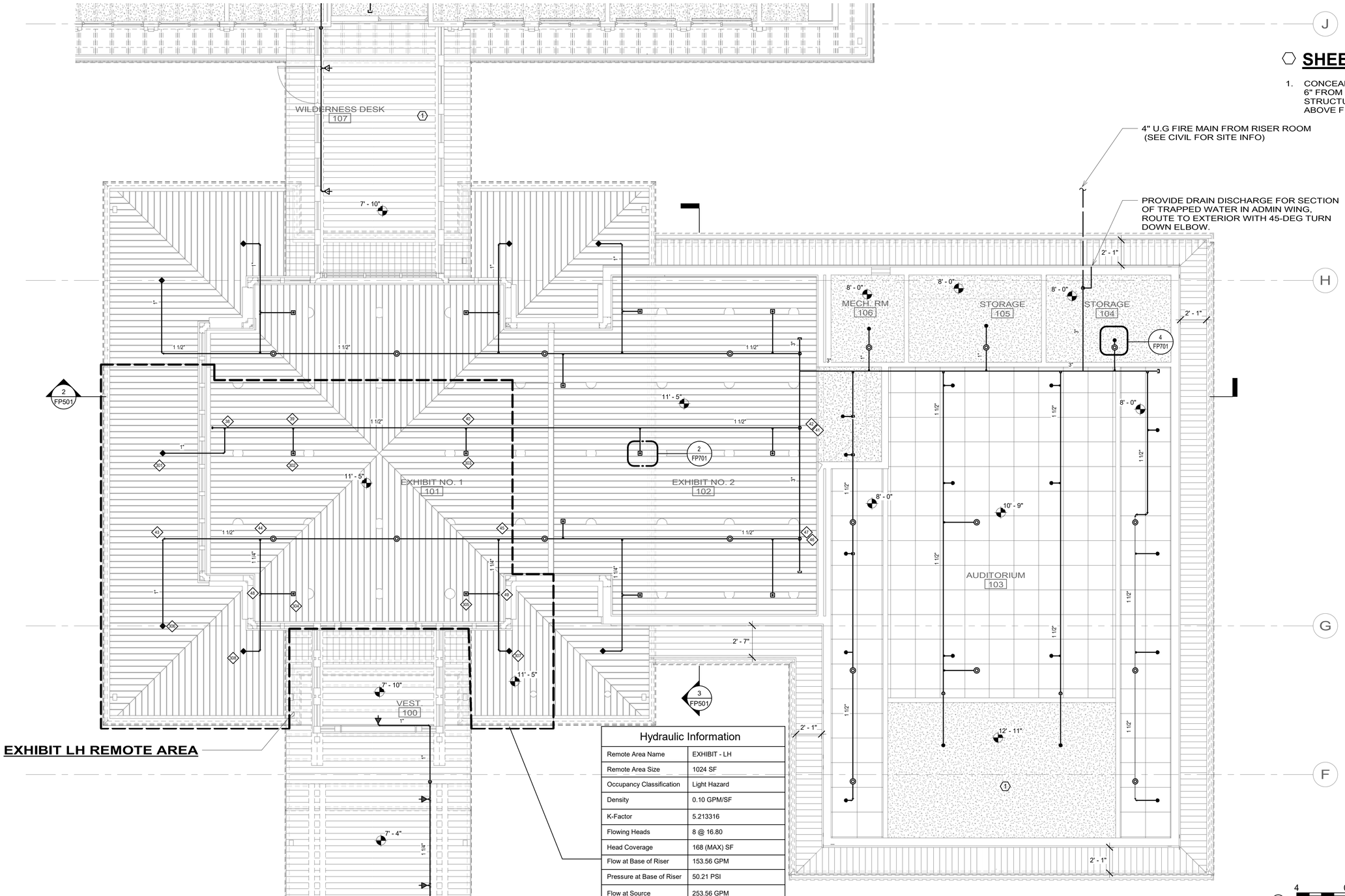

SHEET KEYNOTES

1. CONCEALED COMBUSTIBLE SPACE LESS THAN 6" FROM TOP OF CEILING TO BOTTOM OF STRUCTURE, NO SPRINKLERS PROVIDED ABOVE FINISHED CEILING/DECK.

4" U.G FIRE MAIN FROM RISER ROOM (SEE CIVIL FOR SITE INFO)

PROVIDE DRAIN DISCHARGE FOR SECTION OF TRAPPED WATER IN ADMIN WING, ROUTE TO EXTERIOR WITH 45-DEG TURN DOWN ELBOW.

Hydraulic Information

Remote Area Name	EXHIBIT - LH
Remote Area Size	1024 SF
Occupancy Classification	Light Hazard
Density	0.10 GPM/SF
K-Factor	5.213316
Flowing Heads	8 @ 16.80
Head Coverage	168 (MAX) SF
Flow at Base of Riser	153.56 GPM
Pressure at Base of Riser	50.21 PSI
Flow at Source	253.56 GPM
Pressure at Source	55.40 PSI
Total Hose Streams	100.00 GPM
Safety Margin	+25.46 (31.49%)
Comments:	RA REDUCTION PER 19.2.3.2.3.1. (32%) DARCY-WEISBACH FOR ANTI-FREEZE (TEMP = 0-F)
NFPA 13 - 22	

1 / FP402 ENLARGED PLAN - AUDITORIUM & EXHIBIT - FIRE PROTECTION
SCALE (A)

SCALE: (A) 4 0 4 8 SCALE OF FEET

TRUE PLAN

COLORADO LICENSED
KENTON JAY KIRK
#0057399
PROFESSIONAL ENGINEER

AE FIRM PRIME: OTAK, INC. REDMOND, WA SUBCONTRACTOR: INTERFACE ENGINEERING PORTLAND, OR	DESIGNED: CK CADD CK TECH REVIEW: KA DATE: 01/16/2026	SUB SHEET NO. FP402	TITLE OF SHEET ENLARGED PLAN - AUDITORIUM & EXHIBIT - FIRE PROTECTION REHABILITATE KAWUEECHE VISITOR CENTER ROCKY MOUNTAIN NATION PARK

DRAWING NO. 121 / 165639
PMIS/PKG NO. 326235
SHEET 166 OF 177

1/7/2026 11:47:35 AM Autodesk Docs://2024-260 NPS ROMO Kawuneeche VC DD-CA wOtak/2024260 NPS ROMO KAWUEECHE VISITOR CENTER_FLS_R24.rvt

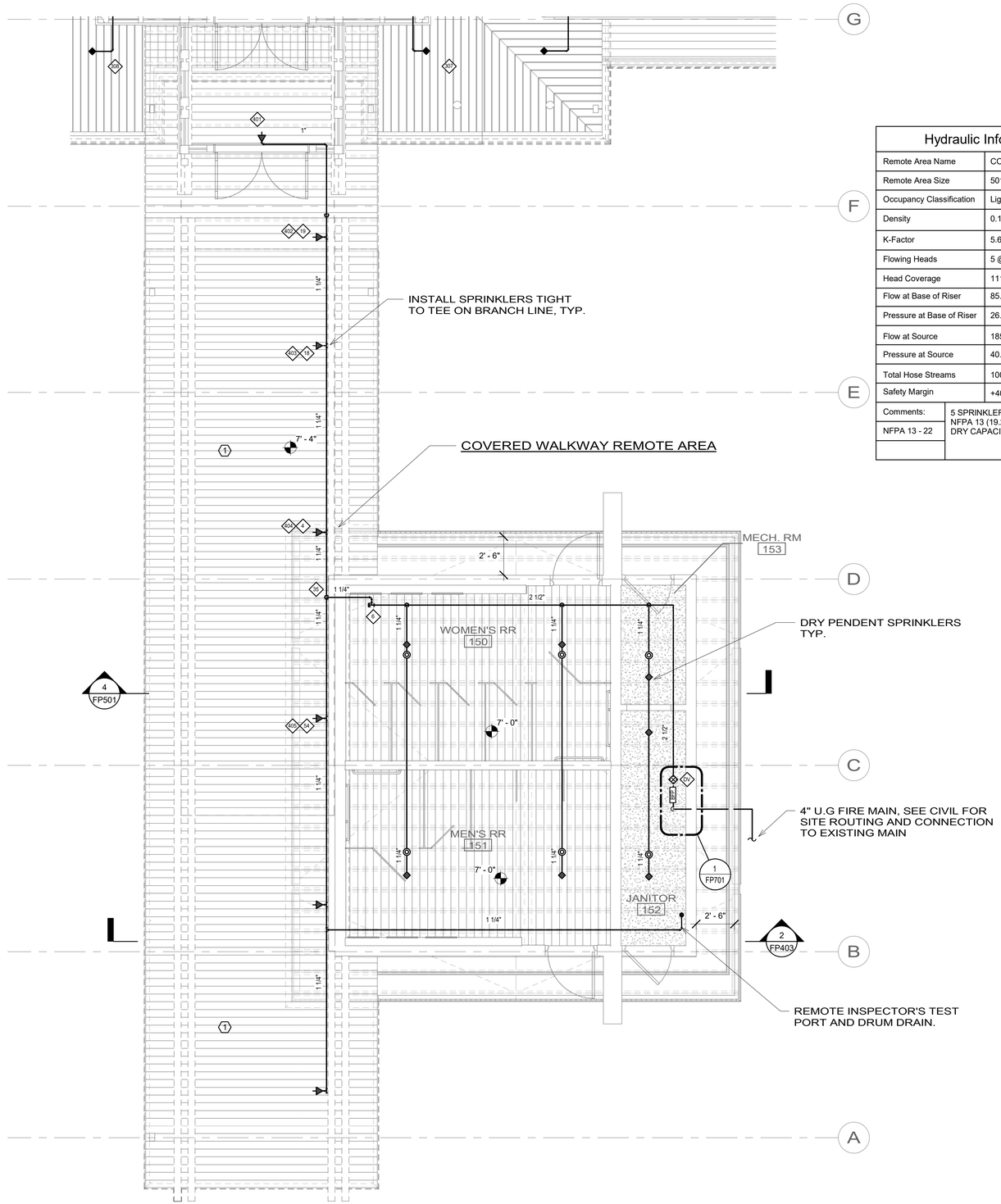

1 FP403 ENLARGED PLAN - COMFORT STATION - FIRE PROTECTION
SCALE (A)

SHEET KEYNOTES

1. CONCEALED COMBUSTIBLE SPACE LESS THAN 6" FROM TOP OF CEILING TO BOTTOM OF STRUCTURE, NO SPRINKLERS PROVIDED ABOVE FINISHED CEILING/DECK.

Hydraulic Information	
Remote Area Name	COVERED WALKWAY - 5 HEAD
Remote Area Size	501 SF
Occupancy Classification	Light Hazard
Density	0.10 GPM/SF
K-Factor	5.6
Flowing Heads	5 @ 14.82
Head Coverage	111 SF
Flow at Base of Riser	85.69 GPM
Pressure at Base of Riser	26.44 PSI
Flow at Source	185.69 GPM
Pressure at Source	40.64 PSI
Total Hose Streams	100.00 GPM
Safety Margin	+40.14 (49.69%)
Comments: NFPA 13 - 22	5 SPRINKLER CORRIDOR CALC PER NFPA 13 (19.2.3.3.6). DRY CAPACITY = 21.5 GALLONS.

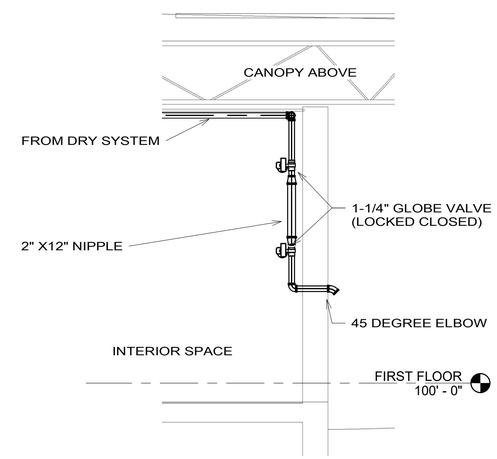

2 FP403 DRY SYSTEM DRIP DRUM - INSPECTOR TEST
SCALE (D)

SCALE: (D) 2 0 2 4 SCALE OF FEET

SCALE: (A) 4 0 4 8 SCALE OF FEET

TRUE PLAN

COLORADO LICENSED KENYON JAY NIKOLAI #0057395 PROFESSIONAL ENGINEER

AE FIRM	DESIGNED:	SUB SHEET NO.	TITLE OF SHEET	DRAWING NO.
PRIME: OTAK, INC. REDMOND, WA	CK	FP403	ENLARGED PLAN - COMFORT STATION - FIRE PROTECTION	121 165639
SUBCONTRACTOR: INTERFACE ENGINEERING PORTLAND, OR	CADD: CK		REHABILITATE KAWUEECHE VISITOR CENTER ROCKY MOUNTAIN NATION PARK	PMIS/PKG NO. 326235
	TECH REVIEW: KA			SHEET 167 OF 177
	DATE: 01/16/2026			

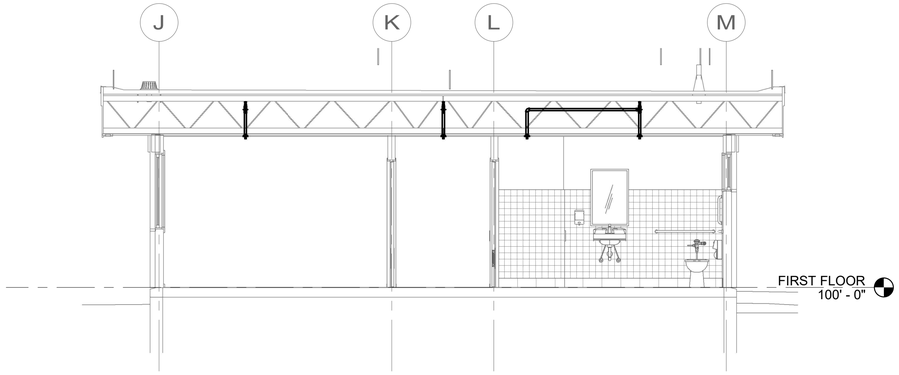

1 FP501 ADMIN SECTION - FIRE PROTECTION
SCALE

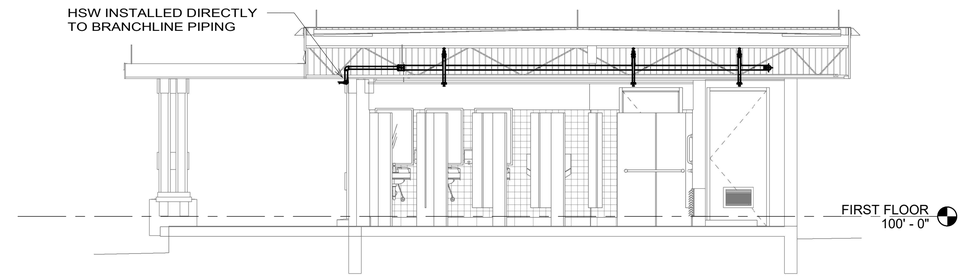

4 FP501 COMFORT STATION - FIRE PROTECTION
SCALE

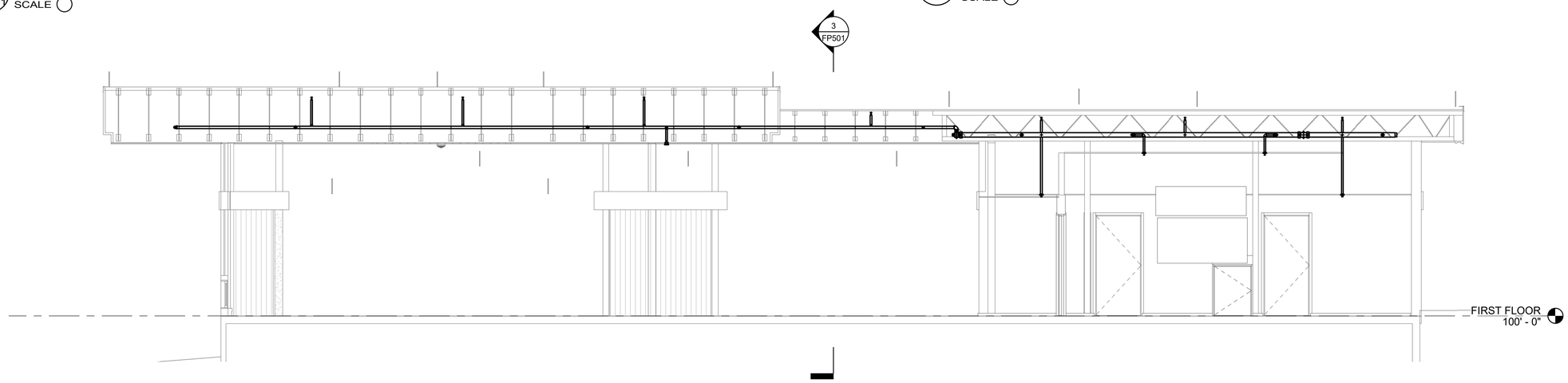

2 FP501 EXHIBIT SECTION 1 - FIRE PROTECTION
SCALE

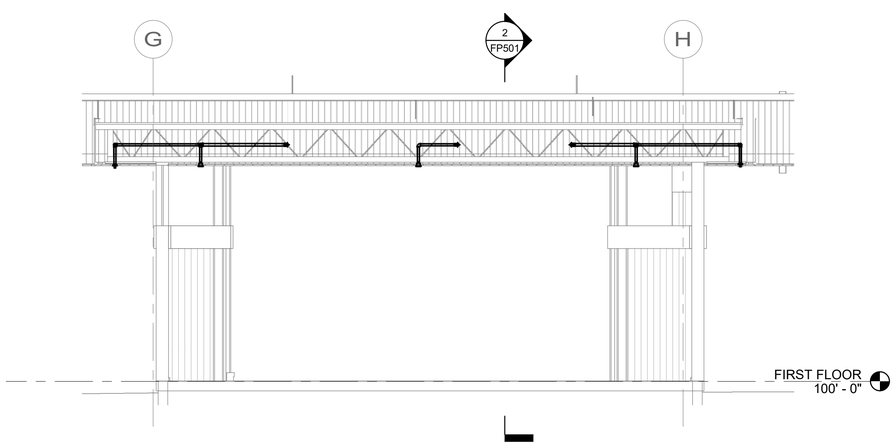

3 FP501 EXHIBIT SECTION 2 - FIRE PROTECTION
SCALE

SCALE: A 4 0 4 8
SCALE OF FEET

COLORADO LICENSED
NEWTON JAY AYRES
#0057399
PROFESSIONAL ENGINEER

AE FIRM PRIME: OTAK, INC. REDMOND, WA SUBCONTRACTOR: INTERFACE ENGINEERING PORTLAND, OR	DESIGNED: CK CADD CK TECH REVIEW: KA DATE: 01/16/2026	SUB SHEET NO. FP501	TITLE OF SHEET SECTIONS - FIRE PROTECTION REHABILITATE KAWUEECHE VISITOR CENTER ROCKY MOUNTAIN NATION PARK

DRAWING NO. 121 / 165639
PMIS/PKG NO. 326235
SHEET 168 OF 177

1/7/2026 11:47:39 AM Autodesk Docs://2024-260 NPS ROMO Kawuneeche VC DD-CA wOtak/2024260 NPS ROMO KAWUEECHE VISITOR CENTER_FLS_R24.rvt

SHEET KEYNOTES

1. PROVIDE SINGLE INTERLOCK PREACTION SPRINKLER SYSTEM FOR SERVER ROOM.
2. PROVIDE DEDICATED PREACTION RELEASE PANEL. PROVIDE 120V POWER. CONNECT TO MAIN FIRE ALARM CONTROL PANEL.
3. PROVIDE (2) PHOTOELECTRIC TYPE SMOKE DETECTORS DEDICATE TO PREACTION SYSTEM. CONNECT TO PREACTION RELEASE PANEL.
4. PROVIDE DRY PENDENT SPRINKLER WITH UPRIGHT SPRINKLER ABOVE. MIN DRY BARREL LENGTH PER MFG RECOMMENDATIONS.

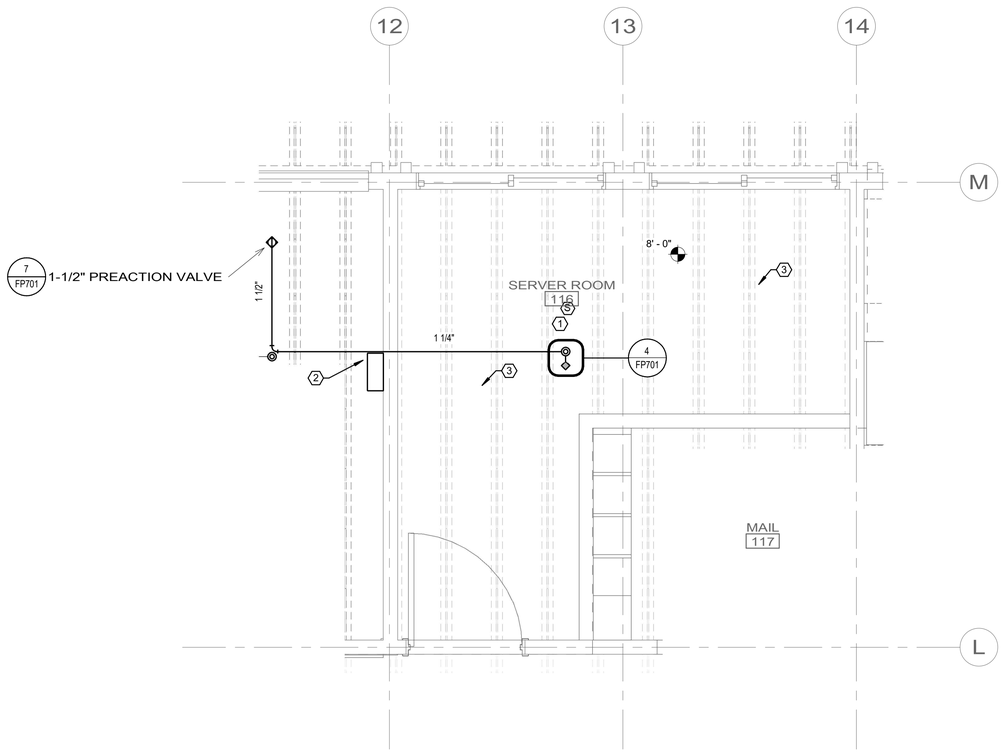

1 FP601 PREACTION SYSTEM PLAN - FIRE PROTECTION
SCALE A

SCALE: A 2 0 2 4
SCALE OF FEET

COLORADO LICENSED NEWTON JAY APPAK #0057393 PROFESSIONAL ENGINEER

AE FIRM	DESIGNED:	SUB SHEET NO.	TITLE OF SHEET	DRAWING NO.
PRIME: OTAK, INC. REDMOND, WA	CK	FP601	ADMIN SERVER ROOM - FIRE PROTECTION	121 / 165639
	CADD: CK			PMIS/PKG NO. 326235
SUBCONTRACTOR: INTERFACE ENGINEERING PORTLAND, OR	TECH REVIEW: KA		REHABILITATE KAWUEECHE VISITOR CENTER ROCKY MOUNTAIN NATION PARK	SHEET 169 OF 177
	DATE: 01/16/2026			

1/7/2026 11:47:42 AM Autodesk Docs://2024-260 NPS ROMO Kawuneeche VC DD-CA wOtak/2024260 NPS ROMO KAWUEECHE VISITOR CENTER_FLS_R24.rvt

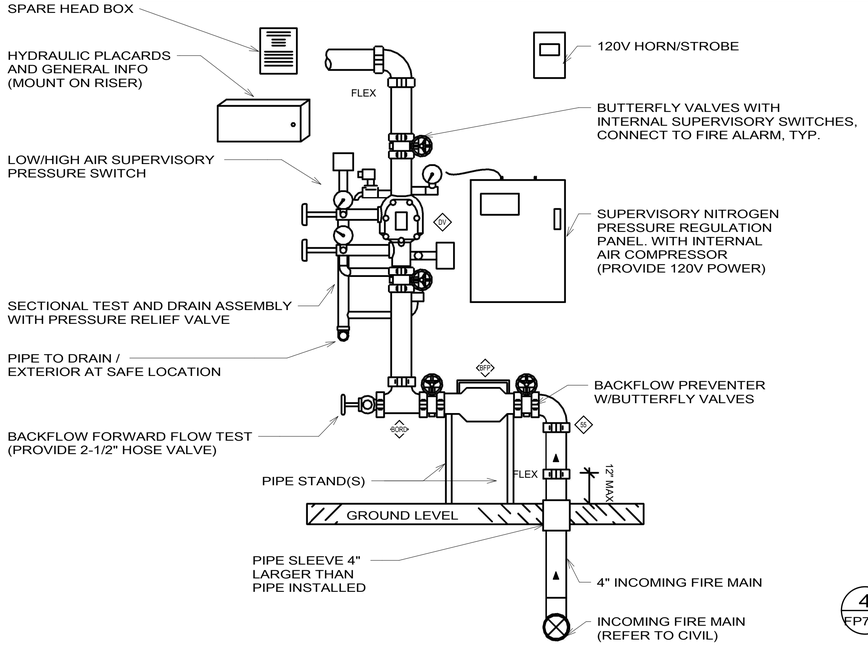

1 FP701 DRY VALVE - W/NITROGEN GAS AND BFP - COMFORT STATION

SCALE

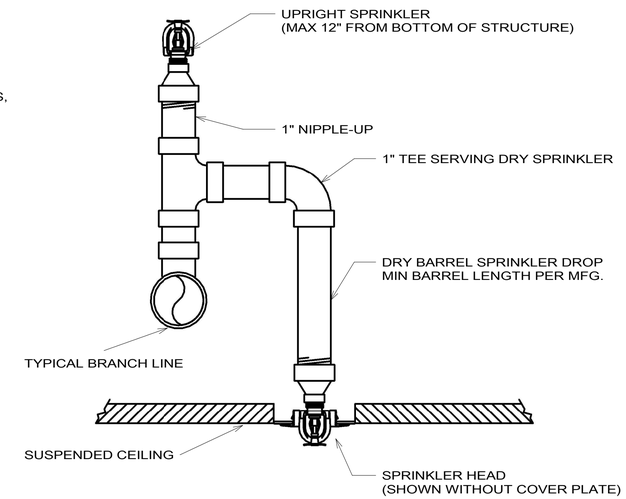

4 FP701 UPRIGHT AND PENDENT SPRINKLER

SCALE

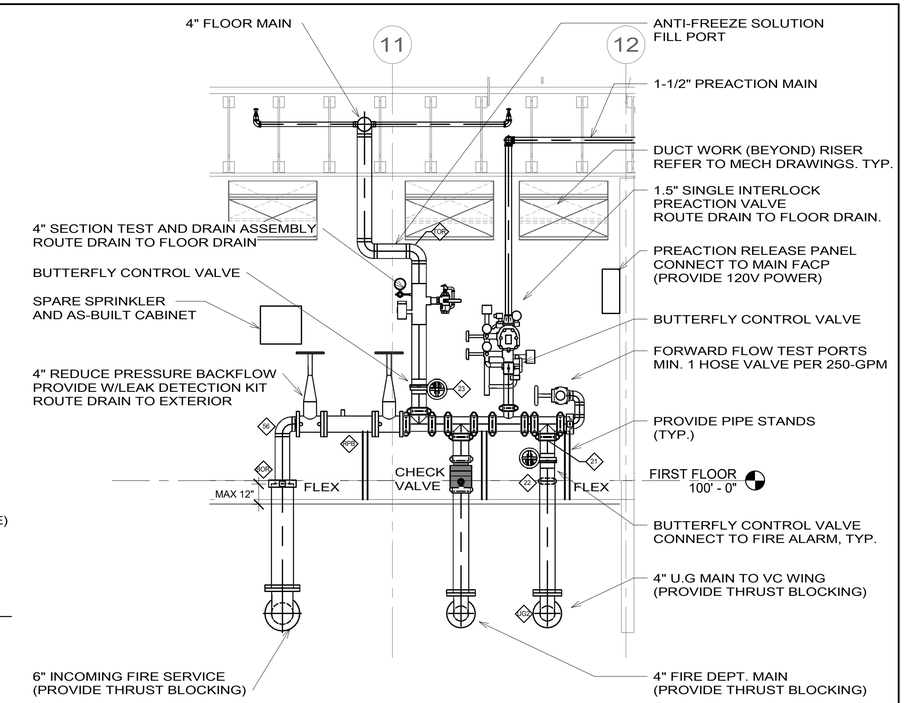

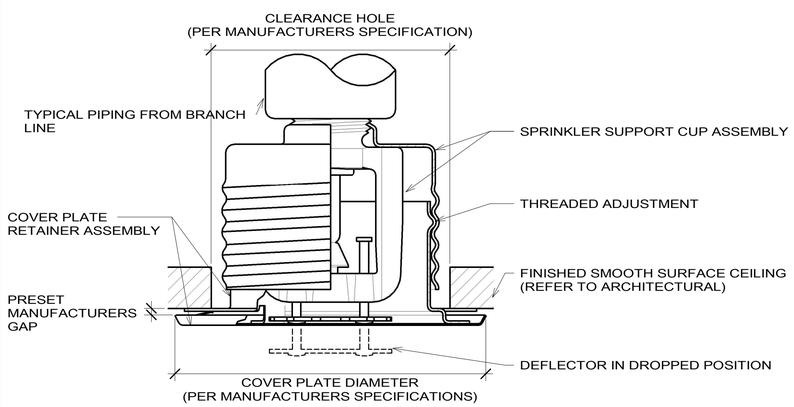

2 FP701 CONCEALED FLAT PLATE SPRINKLER

SCALE

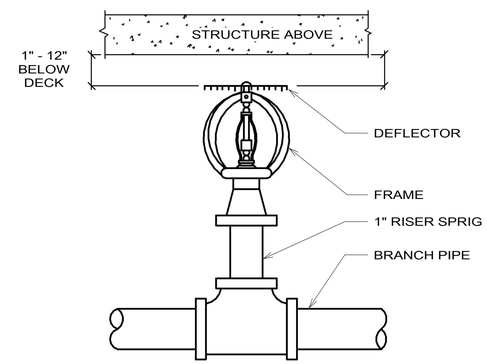

5 FP701 UPRIGHT HEAD ON SPRIG UP

SCALE

7 FP701 WET VALVE - W/PRE ACTION VALVE AND RP-BFP - ADMIN

SCALE

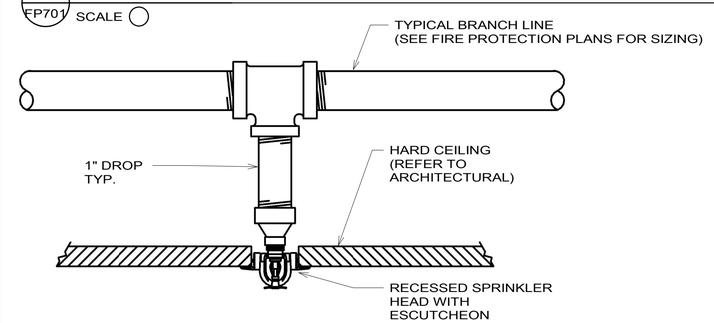

3 FP701 PENDENT IN HARD LID CEILING

SCALE

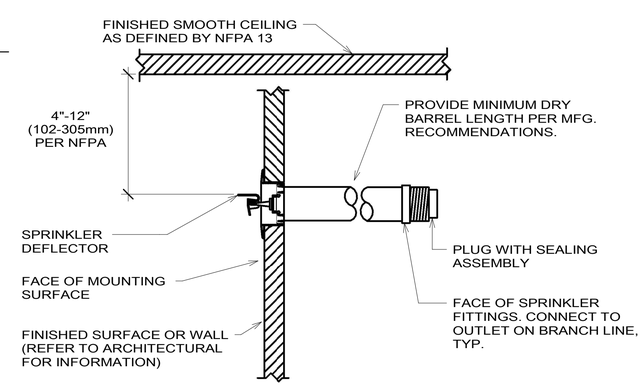

6 FP701 DRY BARREL HORIZONTAL SIDEWALL SPRINKLER

SCALE

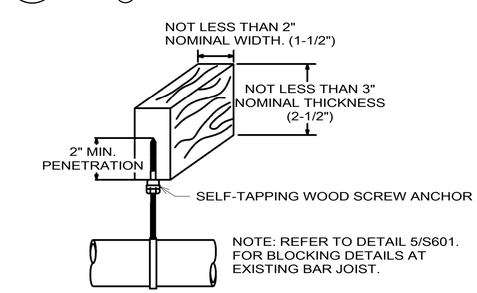

9 FP701 WOOD JOIST HANGER

SCALE

COLORADO LICENSED NEWTON JAY AYRES #0057598 PROFESSIONAL ENGINEER

AE FIRM	DESIGNED:	SUB SHEET NO.	TITLE OF SHEET	DRAWING NO.
PRIME: OTAK, INC. REDMOND, WA	CK	FP701	DETAILS - FIRE PROTECTION	121 / 165639
SUBCONTRACTOR: INTERFACE ENGINEERING PORTLAND, OR	CADD CK			PMIS/PKG NO. 326235
	TECH REVIEW: KA		REHABILITATE KAWUEECHE VISITOR CENTER ROCKY MOUNTAIN NATION PARK	SHEET 170 OF 177
	DATE: 01/16/2026			

1/7/2026 11:47:45 AM Autodesk Docs://2024-260 NPS ROMO Kawuneeche VC DD-CA wOtak/2024260 NPS ROMO KAWUEECHE VISITOR CENTER_FLS_R24.rvt

FIRE ALARM SYMBOL LIST

NOTE: This is a standard symbol list and not all items listed may be used.

Abbreviations

(E)	EXISTING
(X)	DEMOLISH
AHJ	AUTHORITY HAVING JURISDICTION
AUX	AUXILIARY
AWG	AMERICAN WIRE GAUGE
BAS	BUILDING AUTOMATION SYSTEM
C	CONDUIT
CLG	CEILING
CO	CARBON MONOXIDE
COORD	COORDINATE
dB	DECIBEL
DIA	DIAMETER
DIV	DIVISION
DTL	DETAIL
DWG	DRAWING
EA	EACH
EMT	ELECTRICAL METALLIC TUBING
ENCL	ENCLOSURE
FA	FIRE ALARM
FAA	FIRE ALARM ANNUNCIATOR
FACP	FIRE ALARM CONTROL PANEL
FF	FINISHED FLOOR
FMC	FLEXIBLE METAL CONDUIT
FT	FOOT, FEET
GEN	GENERAL
HT	HEIGHT
ID	IDENTIFICATION
IN	INCH, INCHES
LED	LIGHT EMITTING DIODE
LV	LOW VOLTAGE
mA	MILLIAMPERE
MIN	MINIMUM
MISC	MISCHELLANEOUS
N/A	NOT APPLICABLE
NAC	NOTIFICATION APPLINACE CIRCUIT
NTS	NOT TO SCALE
PG	PROTECTIVE GUARD
PNL	PANEL
PVC	POLYVINYL CHLORIDE
PWR	POWER
QTY	QUANTITY
REF	REFERENCE
RFI	REQUEST FOR INFORMATION
SHT	SHEET
SIM	SIMILAR
SLC	SIGNALING LINE CIRCUIT
STD	STANDARD
TBD	TO BE DETERMINED
TYP	TYPICAL
UG	UNDERGROUND
UL	UNDERWRITERS LABORATORIES
V	VOLT, VOLTS
WG	WIREGUARD
WP	WEATHERPROOF

Fire Alarm

FACP	FIRE ALARM CONTROL PANEL
PRE	PREACTION SPRINKLER PANEL, SPECIFIED IN DIV 21.
NAC	NOTIFICATION APPLIANCE CIRCUIT PANEL
FAA	FIRE ALARM ANNUNCIATOR PANEL
FAC	FIRE ALARM COMMUNICATOR
S	SMOKE DETECTOR
S CO	COMBINATION SMOKE/CARBON MONOXIDE DETECTOR
S	SMOKE DETECTOR
S	DUCT SMOKE DETECTOR
CO	CARBON MONOXIDE DETECTOR
H +F	HEAT DETECTOR (+F = FIXED, HIGH TEMP)
F	PULL STATION
WF	SPRINKLER FLOW SWITCH ADDRESSABLE INPUT MODULE
VS	SPRINKLER TAMPER SWITCH ADDRESSABLE INPUT MODULE
PS	PRESSURE SWITCH ADDRESSABLE INPUT MODULE
H #	HORN/STROBE COMBINATION (# INDICATES MINIMUM CANDELA RATING, C = CEILING MOUNTED)
#	STROBE, CEILING MOUNTED (# INDICATES MINIMUM CANDELA RATING)
#	STROBE, WALL MOUNTED (# INDICATES MINIMUM CANDELA RATING)
AIM	ADDRESSABLE INPUT MODULE
AOM	ADDRESSABLE OUTPUT MODULE
IM	FAULT ISOLATER MODULE
SS	SURGE SUPPRESSOR
SD	SMOKE ALARM, WALL MOUNTED
SD	SMOKE ALARM, CEILING MOUNTED

General

X X	DETAIL NUMBER AND SHEET LOCATION
X	KEYED NOTE

Raceways

————	CONDUIT
----------	CONDUIT ROUTED BELOW FLOOR / GRADE

FIRE ALARM SCOPE NOTES:

A. DEMOLISH EXISTING SMOKE ALARMS AND CIRCUITING BACK TO SOURCE.

B. PROVIDE NEW ADDRESSABLE FIRE ALARM SYSTEM THROUGHOUT THE ADMIN WING, AUDITORIUM AND EXHIBIT BUILDING, AND COMFORT STATION.
   a. PROVIDE AUDIBLE NOTIFICATION THROUGHOUT THE BUILDINGS.
   b. PROVIDE VISUAL NOTIFICATION IN ALL PUBLIC AND COMMON USE SPACES.
   c. PROVIDE SMOKE DETECTION THROUGHOUT ALL SPACES OF THE BUILDINGS, EXCEPT RESTROOMS AND SPACES NOT SUITABLE FOR SMOKE DETECTION, WHICH FIRE SPRINKLERS WILL ACT AS INITIATION DEVICES IN THOSE SPACES.
   d. PROVIDE SUPERVISION OF THE PREACTION PANEL FOR THE ADMIN WING SERVER ROOM.
   e. PROVIDE MONITORING OF THE NEW FIRE SPRINKLER SYSTEMS.

APPLICABLE CODES:

A. 2024 INTERNATIONAL BUILDING CODE (IBC)
B. 2024 INTERNATIONAL FIRE CODE (IFC)
C. ARCHITECTURAL BARRIERS ACT ACCESSIBILITY STANDARDS (ABAAS)
D. 2023 NATIONAL ELECTRICAL CODE (NEC)
E. 2024 NATIONAL MECHANICAL CODE (NMC)
F. 2022 NATIONAL FIRE ALARM AND SIGNALING CODE (NFPA 72)
G. NPS STRUCTURAL FIRE MANAGEMENT REFERENCE MANUAL 58 (RM58)

SHEET INDEX

FA001	SYMBOL LIST AND GENERAL NOTES - FIRE ALARM
FAD101	OVERALL DEMO FLOOR PLAN - FIRE ALARM
FA101	OVERALL FLOOR PLAN - FIRE ALARM
FA401	ENLARGED PLAN - ADMIN - FIRE ALARM
FA402	ENLARGED PLAN - AUDITORIUM & EXHIBIT - FIRE ALARM
FA403	ENLARGED PLAN - COMFORT STATION - FIRE ALARM
FA701	DETAILS - FIRE ALARM

COLORADO LICENSED
TREVOR JAY ALLEN
#0057399
PROFESSIONAL ENGINEER

AE FIRM PRIME: OTAK, INC. REDMOND, WA SUBCONTRACTOR: INTERFACE ENGINEERING PORTLAND, OR	DESIGNED: JM CADD JM TECH REVIEW: KA DATE: 01/16/2026	SUB SHEET NO. FA001	TITLE OF SHEET SYMBOL LIST AND GENERAL NOTES - FIRE ALARM REHABILITATE KAWUEECHE VISITOR CENTER ROCKY MOUNTAIN NATION PARK	DRAWING NO. 121 165639 PMIS/PKG NO. 326235 SHEET 171 OF 177

1/7/2026 7:57:56 AM Autodesk Docs://2024-260 NPS ROMO Kawuneeche VC DD-CA wOtak/2024260 NPS ROMO KAWUEECHE VISITOR CENTER_FLS_R24.rvt

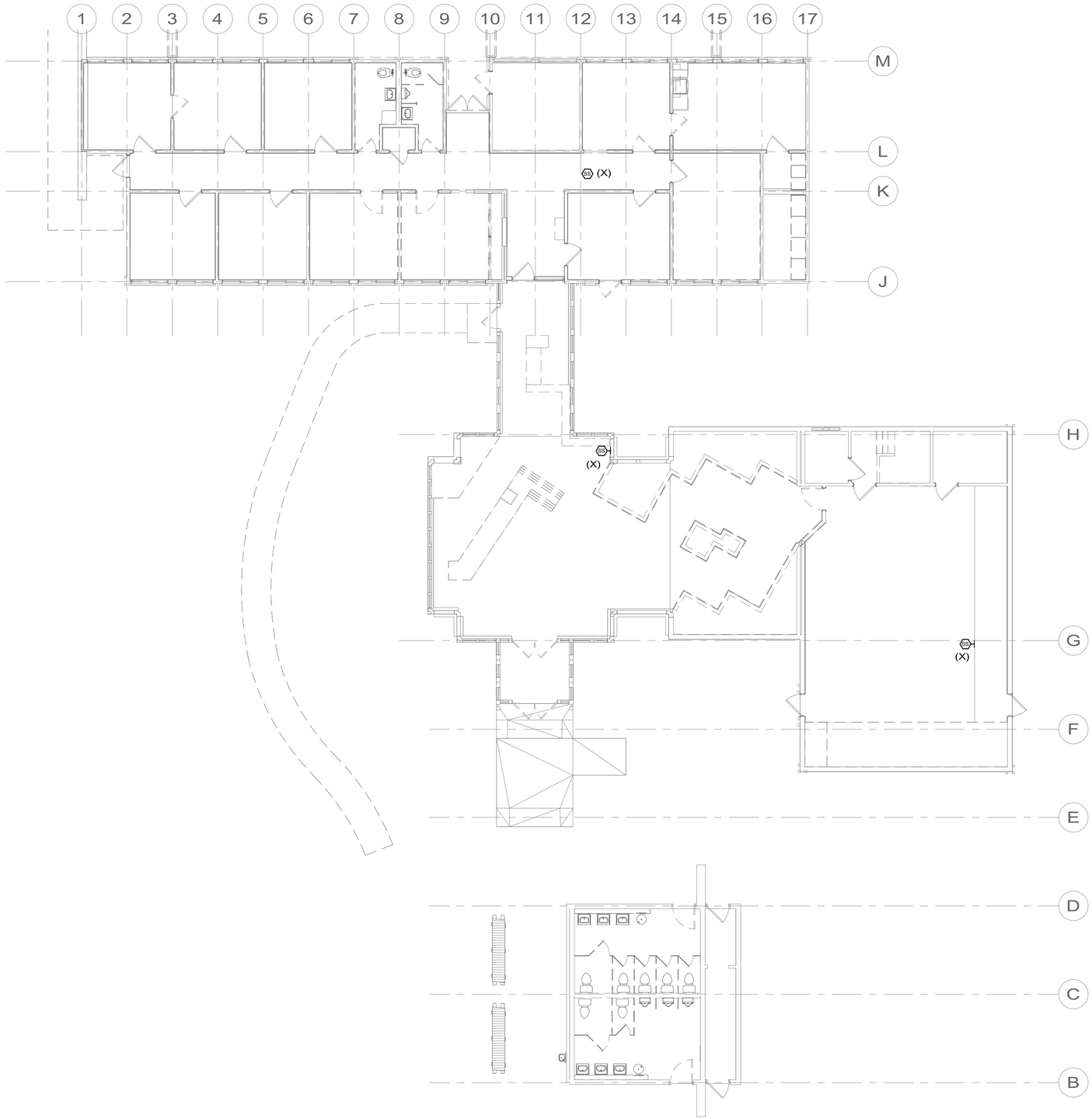

GENERAL SHEET NOTES

A. DEMOLISH EXISTING SMOKE ALARMS. DEMOLISH SMOKE ALARM CIRCUIT/WIRING BACK TO SOURCE.

SCALE: (A) 8 0 8 16 SCALE OF FEET

TRUE PLAN

1 FAD101 OVERALL DEMO FLOOR PLAN - FIRE ALARM
SCALE (A)

COLORADO LICENSED PROFESSIONAL ENGINEER #0027399

AE FIRM	DESIGNED:	SUB SHEET NO.	TITLE OF SHEET	DRAWING NO.
PRIME: OTAK, INC. REDMOND, WA SUBCONTRACTOR: INTERFACE ENGINEERING PORTLAND, OR	JM CADD JM TECH REVIEW: KA DATE: 01/16/2026	FAD101	OVERALL DEMO FLOOR PLAN - FIRE ALARM REHABILITATE KAWUEECHE VISITOR CENTER ROCKY MOUNTAIN NATION PARK	121 165639 PMIS/PKG NO. 326235 SHEET 172 OF 177

1/7/2026 7:57:59 AM Autodesk Docs://2024-260 NPS ROMO Kawuneeche VC DD-CA wOtak/2024260 NPS ROMO KAWUEECHE VISITOR CENTER_FLS_R24.rvt

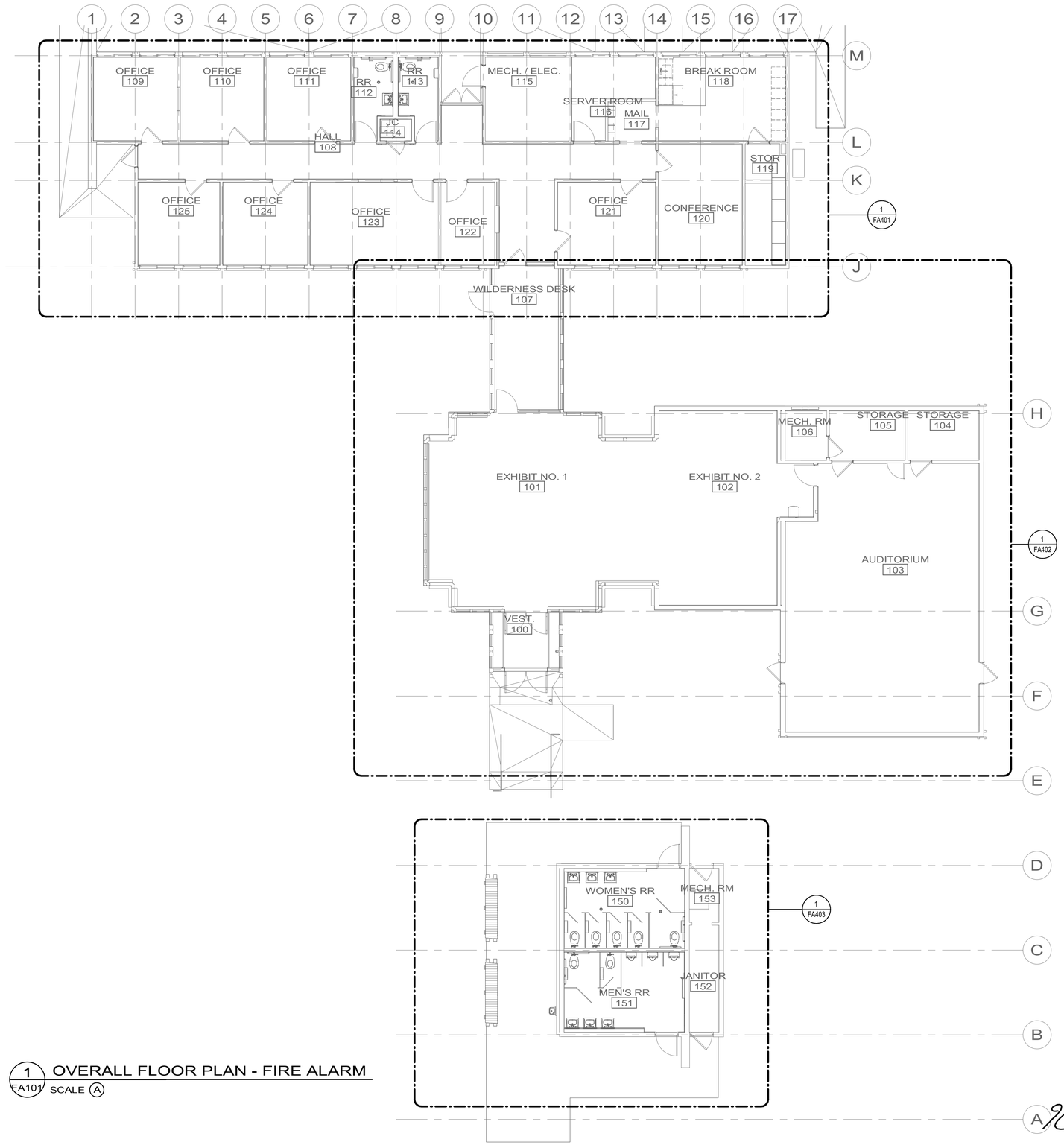

1 FA101 OVERALL FLOOR PLAN - FIRE ALARM
SCALE (A)

SCALE: (A) 8 0 8 16 SCALE OF FEET

TRUE PLAN

COLORADO LICENSED PROFESSIONAL ENGINEER #0027399

AE FIRM	DESIGNED:	SUB SHEET NO.	TITLE OF SHEET	DRAWING NO.
PRIME: OTAK, INC. REDMOND, WA	JM	FA101	OVERALL FLOOR PLAN - FIRE ALARM	121 165639
	CADD JM			PMIS/PKG NO. 326235
SUBCONTRACTOR: INTERFACE ENGINEERING PORTLAND, OR	TECH REVIEW: KA		REHABILITATE KAWUEECHE VISITOR CENTER ROCKY MOUNTAIN NATION PARK	SHEET 173 OF 177
	DATE: 01/16/2026			

1/7/2026 7:58:04 AM Autodesk Docs://2024-260 NPS ROMO Kawuneeche VC DD-CA wOtak/2024260 NPS ROMO KAWUEECHE VISITOR CENTER_FLS_R24.rvt

SHEET KEYNOTES

1. PROVIDE ADDRESSABLE INPUT MODULES FOR MONITORING THE PREACTION SPRINKLER SYSTEM FOR ALARM, TROUBLE, AND SUPERVISORY CONDITIONS. PROVIDE QUANTITY OF ADDRESSABLE INPUT MODULES AS REQUIRED FOR COMPLETE MONITORING.
2. PROVIDE QUANTITY OF POWER SUPPLIES FOR A COMPLETE OPERABLE SYSTEM.
3. PROVIDE EXTERIOR APPLIANCE TO SOUND ON FIRE SPRINKLER WATER FLOW. HORN TO SILENCE ONLY UPON CEASE OF WATER FLOW.

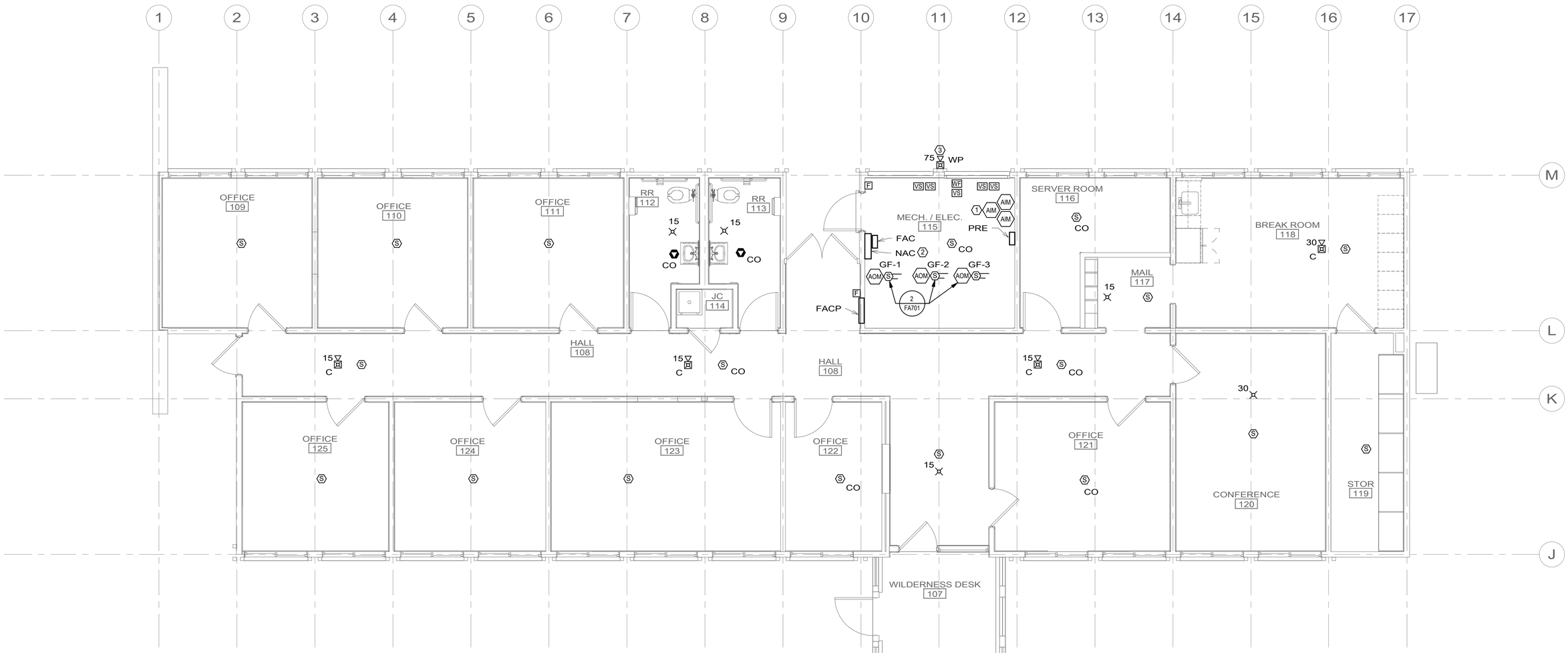

1 FA401 ENLARGED PLAN - ADMIN - FIRE ALARM
SCALE A

SCALE: A 4 0 4 8 SCALE OF FEET

TRUE PLAN

COLORADO LICENSED PROFESSIONAL ENGINEER #0057399

AE FIRM	DESIGNED:	SUB SHEET NO.	TITLE OF SHEET	DRAWING NO.
PRIME: OTAK, INC. REDMOND, WA SUBCONTRACTOR: INTERFACE ENGINEERING PORTLAND, OR	JM CADD JM TECH REVIEW: KA DATE: 01/16/2026	FA401	ENLARGED PLAN - ADMIN - FIRE ALARM REHABILITATE KAWUEECHE VISITOR CENTER ROCKY MOUNTAIN NATION PARK	121 165639 PMIS/PKG NO. 326235 SHEET 174 OF 177

Autodesk Docs://2024-260 NPS ROMO Kawuneeche VC DD-CA wOtak/2024260 NPS ROMO KAWUEECHE VISITOR CENTER_FLS_R24.rvt
1/7/2026 7:58:06 AM

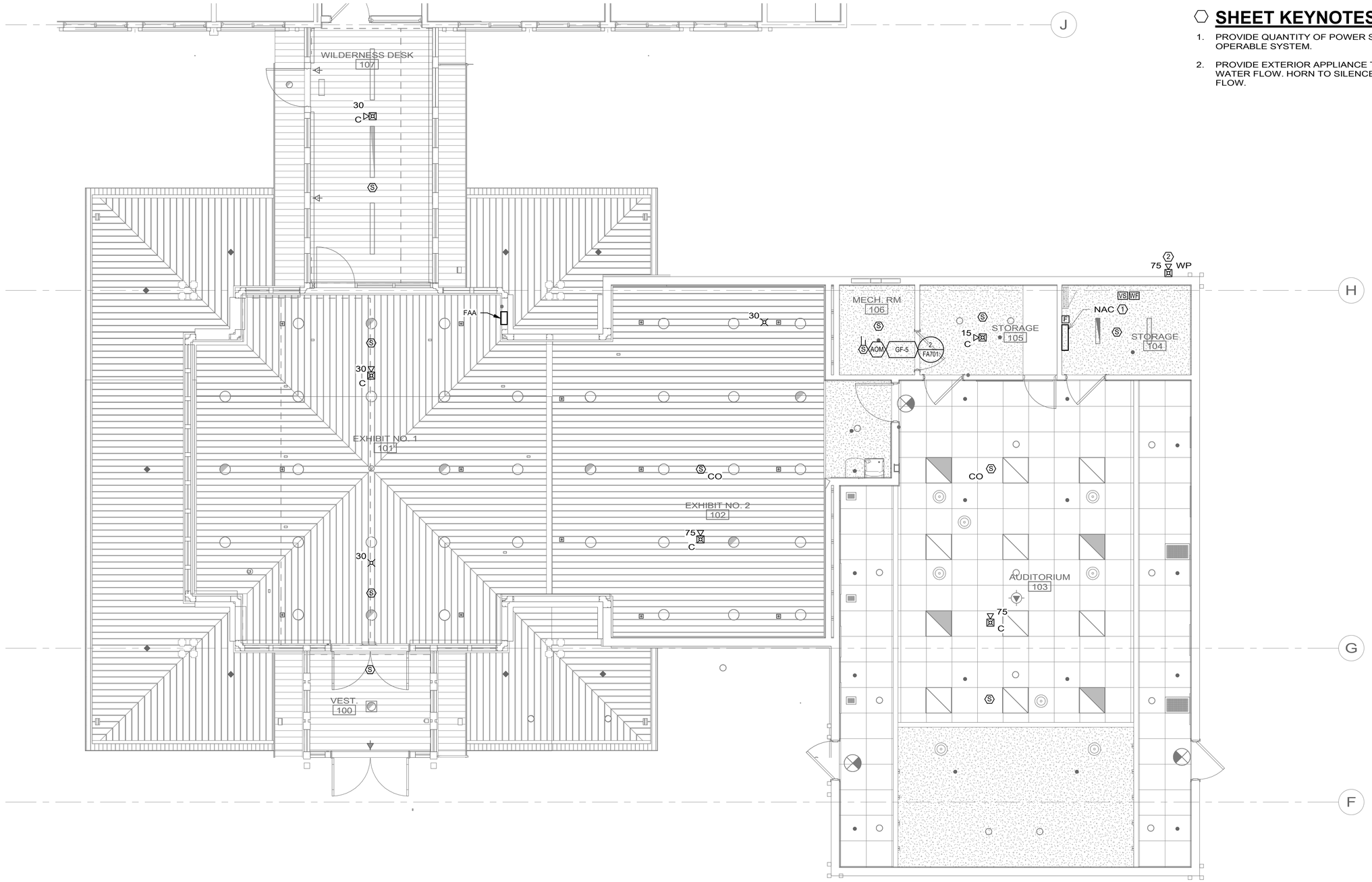

SHEET KEYNOTES

1. PROVIDE QUANTITY OF POWER SUPPLIES FOR A COMPLETE OPERABLE SYSTEM.
2. PROVIDE EXTERIOR APPLIANCE TO SOUND ON FIRE SPRINKLER WATER FLOW. HORN TO SILENCE ONLY UPON CEASE OF WATER FLOW.

SCALE: A 4 0 4 8 SCALE OF FEET

TRUE PLAN

1 FA402 ENLARGED PLAN - AUDITORIUM & EXHIBIT - FIRE ALARM
SCALE A

COLORADO LICENSED PROFESSIONAL ENGINEER #0052399

AE FIRM PRIME: OTAK, INC. REDMOND, WA SUBCONTRACTOR: INTERFACE ENGINEERING PORTLAND, OR	DESIGNED: JM CADD JM TECH REVIEW: KA DATE: 01/16/2026	SUB SHEET NO. FA402	TITLE OF SHEET ENLARGED PLAN - AUDITORIUM & EXHIBIT - FIRE ALARM REHABILITATE KAWUEECHE VISITOR CENTER ROCKY MOUNTAIN NATION PARK	DRAWING NO. 121 165639 PMIS/PKG NO. 326235 SHEET 175 OF 177

Autodesk Docs://2024-260 NPS ROMO Kawuneeche VC DD-CA wOtak/2024260 NPS ROMO KAWUEECHE VISITOR CENTER_FLS_R24.rvt
1/7/2026 7:58:08 AM

SHEET KEYNOTES

1. PROVIDE EXTERIOR APPLIANCE TO SOUND ON FIRE SPRINKLER WATER FLOW. HORN TO SILENCE ONLY UPON CEASE OF WATER FLOW.

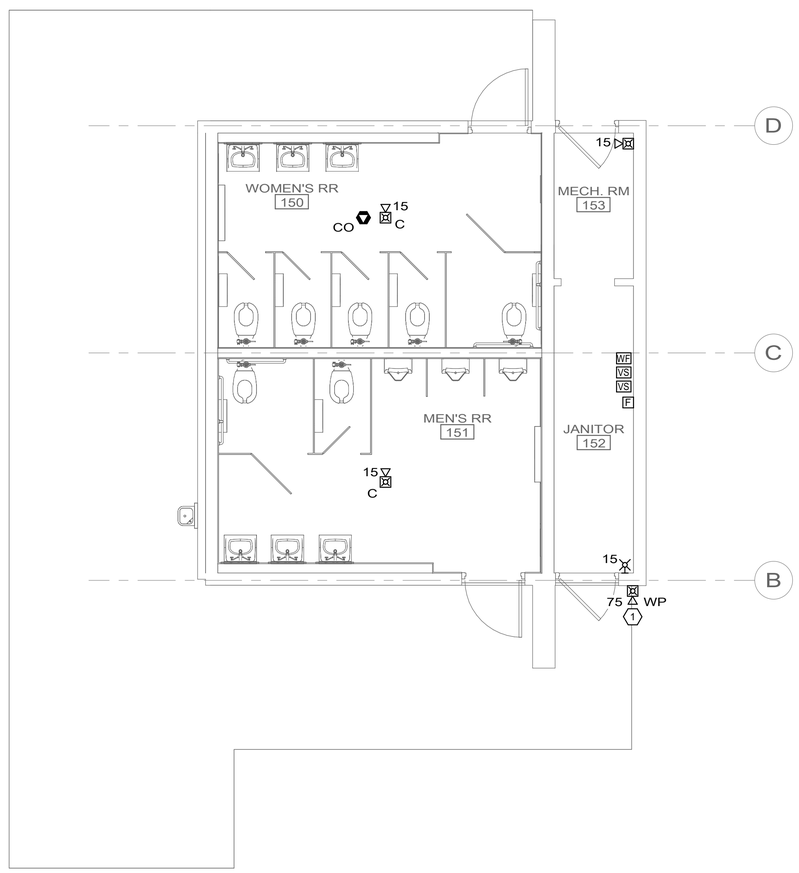

1 FA403 ENLARGED PLAN - COMFORT STATION - FIRE ALARM

SCALE (A)

SCALE: (A) 4 0 4 8 SCALE OF FEET

TRUE PLAN

COLORADO LICENSED PROFESSIONAL ENGINEER

AE FIRM PRIME: OTAK, INC. REDMOND, WA SUBCONTRACTOR: INTERFACE ENGINEERING PORTLAND, OR	DESIGNED: JM CADD JM TECH REVIEW: KA DATE: 01/16/2026	SUB SHEET NO. FA403	TITLE OF SHEET ENLARGED PLAN - COMFORT STATION - FIRE ALARM REHABILITATE KAWUEECHE VISITOR CENTER ROCKY MOUNTAIN NATION PARK

DRAWING NO. 121 / 165639

PMIS/PKG NO. 326235

SHEET 176 OF 177

1/7/2026 7:58:11 AM Autodesk Docs://2024-260 NPS ROMO Kawuneeche VC DD-CA wOtak/2024260 NPS ROMO KAWUEECHE VISITOR CENTER_FLS_R24.rvt

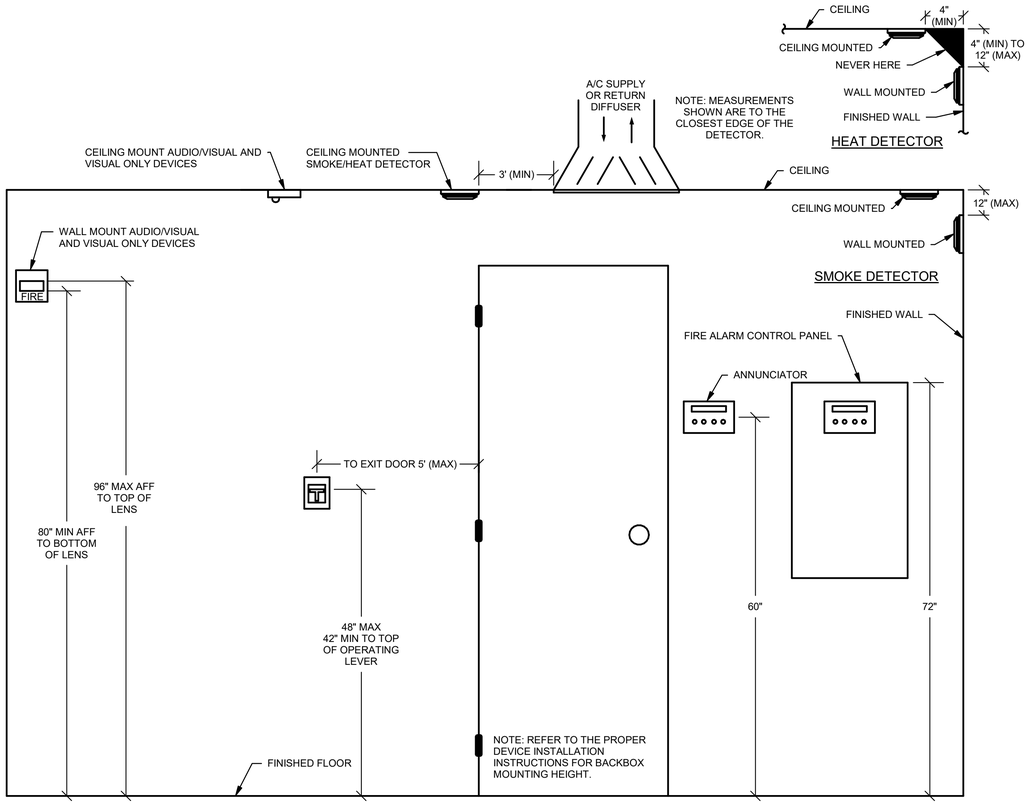

1 DEVICE MOUNTING HEIGHTS
FA701 SCALE

DETAIL KEYNOTES

1. 120VAC PRIMARY POWER SOURCE SHALL BE A MECHANICALLY PROTECTED BRANCH CIRCUIT. THE CIRCUIT DISCONNECTING MEANS SHALL HAVE A RED MARKING AND BE IDENTIFIED AS "FIRE ALARM CIRCUIT".

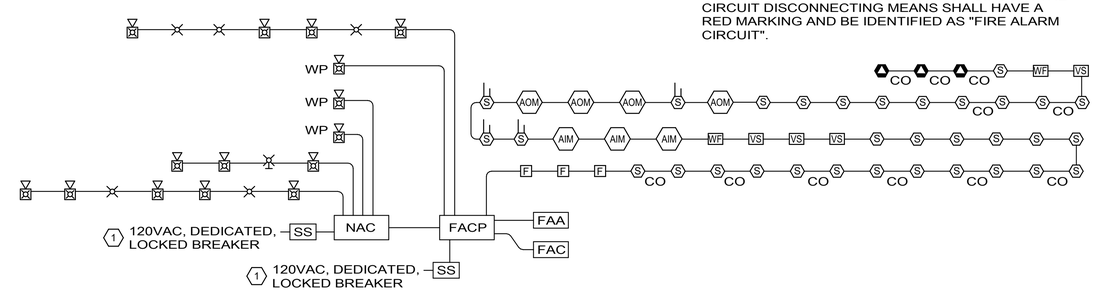

FIRST FLOOR

3 ONE-LINE DIAGRAM
FA701 SCALE

DETAIL KEYNOTES

1 AIR HANDLING UNIT (AHU) STARTER/VFD.

2 FIRE ALARM ADDRESSABLE RELAY. CONNECT TO EMERGENCY STOP INPUT ON FAN CONTROLLER. PROGRAM TO STOP FAN ON ACTIVATION OF ASSOCIATED SMOKE DETECTION. PROVIDE RELAY FOR EACH FAN CONTROLLER.

3 FIRE ALARM ADDRESSABLE DUCT SMOKE DETECTOR.

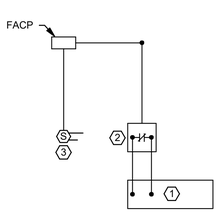

2 HVAC FAN SHUT DOWN DIAGRAM
FA701 SCALE

COLORADO LICENSED PROFESSIONAL ENGINEER
JAYON JAY JENKINS
No. 0057399

AE FIRM	DESIGNED:	SUB SHEET NO.	TITLE OF SHEET	DRAWING NO.
PRIME: OTAK, INC. REDMOND, WA	JM	FA701	DETAILS - FIRE ALARM	121 165639
SUBCONTRACTOR: INTERFACE ENGINEERING PORTLAND, OR	CADD JM			PMIS/PKG NO. 326235
	TECH REVIEW: KA		REHABILITATE KAWUEECHE VISITOR CENTER ROCKY MOUNTAIN NATION PARK	SHEET 177 OF 177
	DATE: 01/16/2026			

1/7/2026 7:58:11 AM Autodesk Docs://2024-260 NPS ROMO Kawuneeche VC DD-CA wOtak/2024260 NPS ROMO KAWUEECHE VISITOR CENTER_FLS_R24.rvt