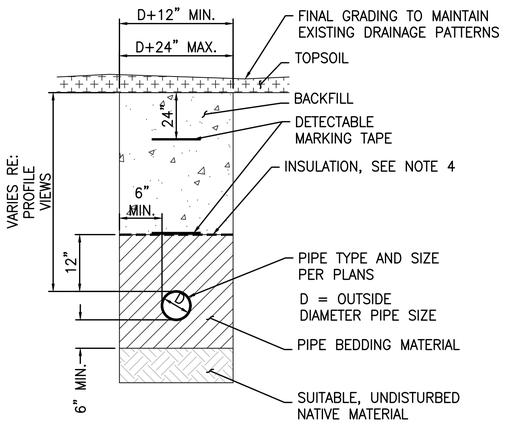

1 C606 TRENCH, NON-TRAFFIC AREA
NTS

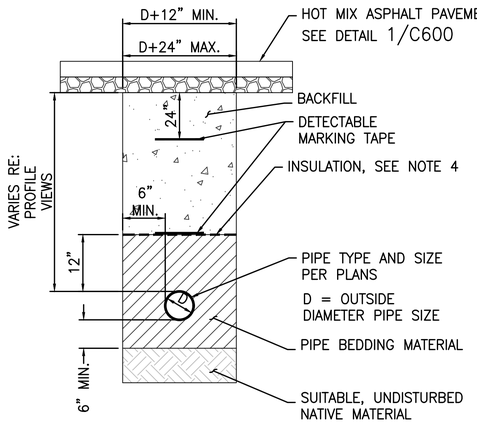

2 C606 TRENCH, PAVED AREA
NTS

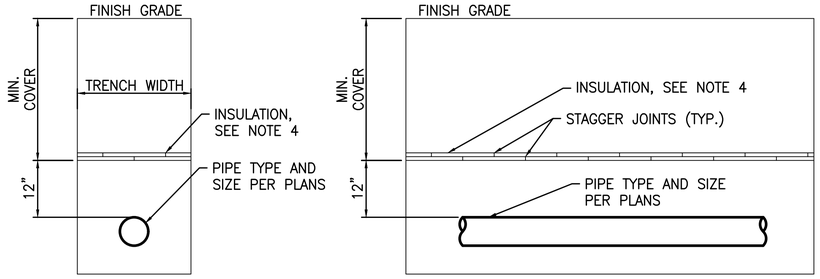

3 C606 TYPICAL UTILITY INSULATION PLACEMENT
NTS

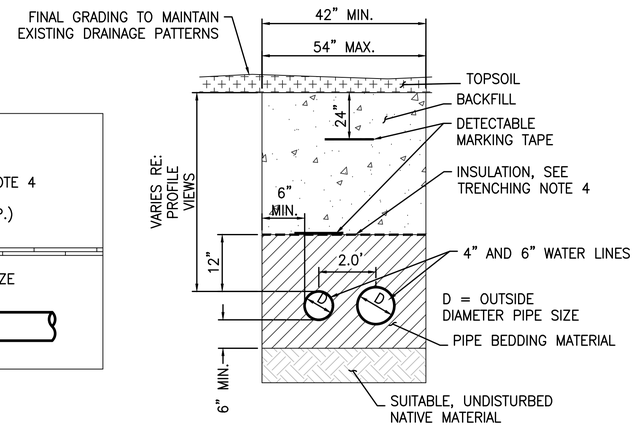

9 C606 SHARED TRENCH
NTS

TRENCHING NOTES:

1. COMPACT BACKFILL PER SPECIFICATIONS.
2. WATER: MAINTAIN 6' BURY DEPTH (MINIMUM) WITH MINIMUM 2.5" POLYSTYRENE INSULATION. INSTALL MINIMUM 1-INCH OF INSULATION FOR EVERY 1-FOOT OF COVER THAT CANNOT BE PROVIDED OVER UTILITY MAINS AND SERVICES.
3. RAMPS SHALL BE PROVIDED EVERY 20'-50' ALONG TRENCH LENGTH AT SLOPES LESS THAN 45° TO ALLOW ANIMALS TO ESCAPE SHOULD THEY FALL IN. ALTERNATIVELY, TRENCHES MAY BE COVERED WHEN WORK IS NOT BEING PERFORMED IN SUCH A WAY AS TO PREVENT ANIMALS FROM FALLING IN. CONTRACTOR TO VERIFY NO ANIMALS IN TRENCH PRIOR TO COVERING.
4. WHERE WATER MAINS AND SERVICES CROSS BENEATH STORM SEWER, INSTALL MINIMUM 1-INCH OF INSULATION FOR EVERY 1-FOOT OF COVER THAT CANNOT BE PROVIDED. EXTEND INSULATION MINIMUM 5-FEET BEYOND STORM CROSSING IN BOTH DIRECTIONS.
5. INSULATION BOARD SHALL COMPLY WITH ASTM C578, TYPE VI, WITH A MINIMUM COMPRESSIVE STRENGTH OF 40 PSI. STAGGER JOINTS OF UPPER AND LOWER LAYERS OF INSULATION BOARD AND TAPE ALL JOINTS.
6. CONTRACTOR OPTION: INSTALL SINGLE LAYER OF 2.5" THICK POLYSTYRENE INSULATION BOARD WHERE REQUIRED AND ENSURE JOINTS ARE TIGHT PRIOR TO PLACEMENT OF BACKFILL OVER INSULATION BOARD. WHERE ADDITIONAL THICKNESS OF INSULATION IS REQUIRED CONTRACTOR SHALL USE BOARD THICKNESSES THAT MAKEUP THE TOTAL REQUIRED.

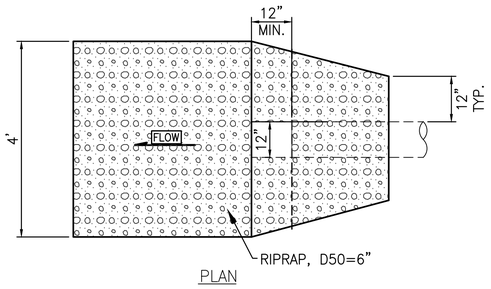

7 C606 OUTFALL PROTECTION
NTS

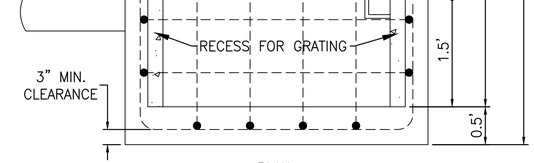

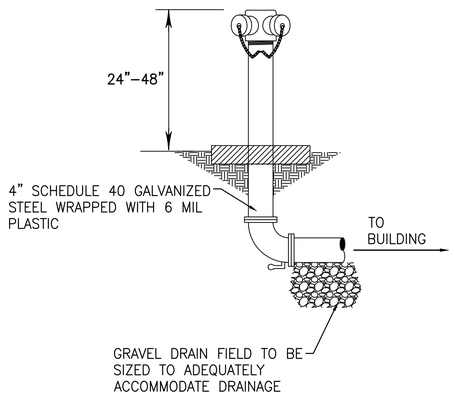

4 C606 FIRE DEPARTMENT CONNECTION
NTS

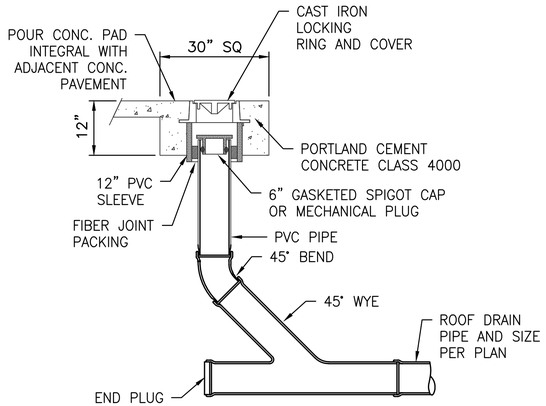

6 C606 CLEANOUT AND WYE
NTS

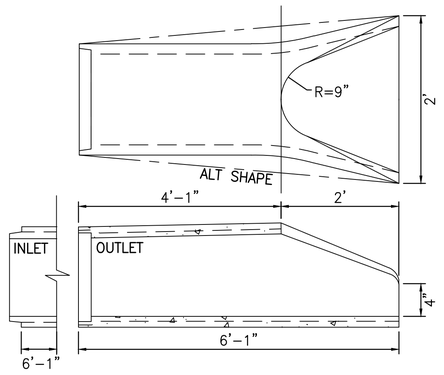

8 C606 RCP FLARED END SECTION
NTS

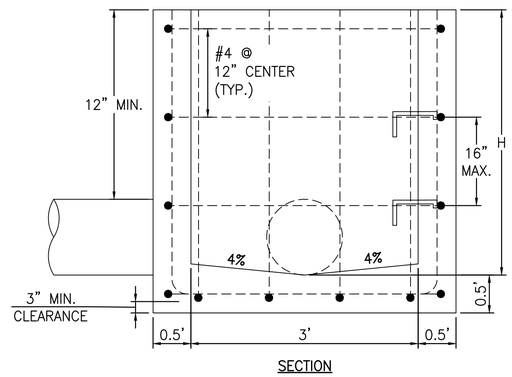

5 C606 CONCRETE INLET B
NTS

COLORADO LICENSED
KEVIN FRANCIS DOOLEY
47088
PROFESSIONAL ENGINEER
1/23/2026

AE FIRM: PRIME: OTAK, INC. REDMOND, WA	DESIGNED: EM / CS CADD: ZS TECH REVIEW: EM / KK DATE: 01/16/2026	SUB SHEET NO. C606	TITLE OF SHEET: SITE DETAILS VII REHABILITATE KAWUNEECHE VISITOR CENTER ROCKY MOUNTAIN NATIONAL PARK	DRAWING NO. 121 165639 PMIS/PKG NO. 326235 SHEET 56 OF 177

Plotted: Jan. 23, 2026 - 7:34pm emily.maggio O:\PROJECT\33200\332784\04 CAD\ACAD\KWO\326235\DRAWINGS\CIVIL\08 DETAILS.dwg Layout Name: S5

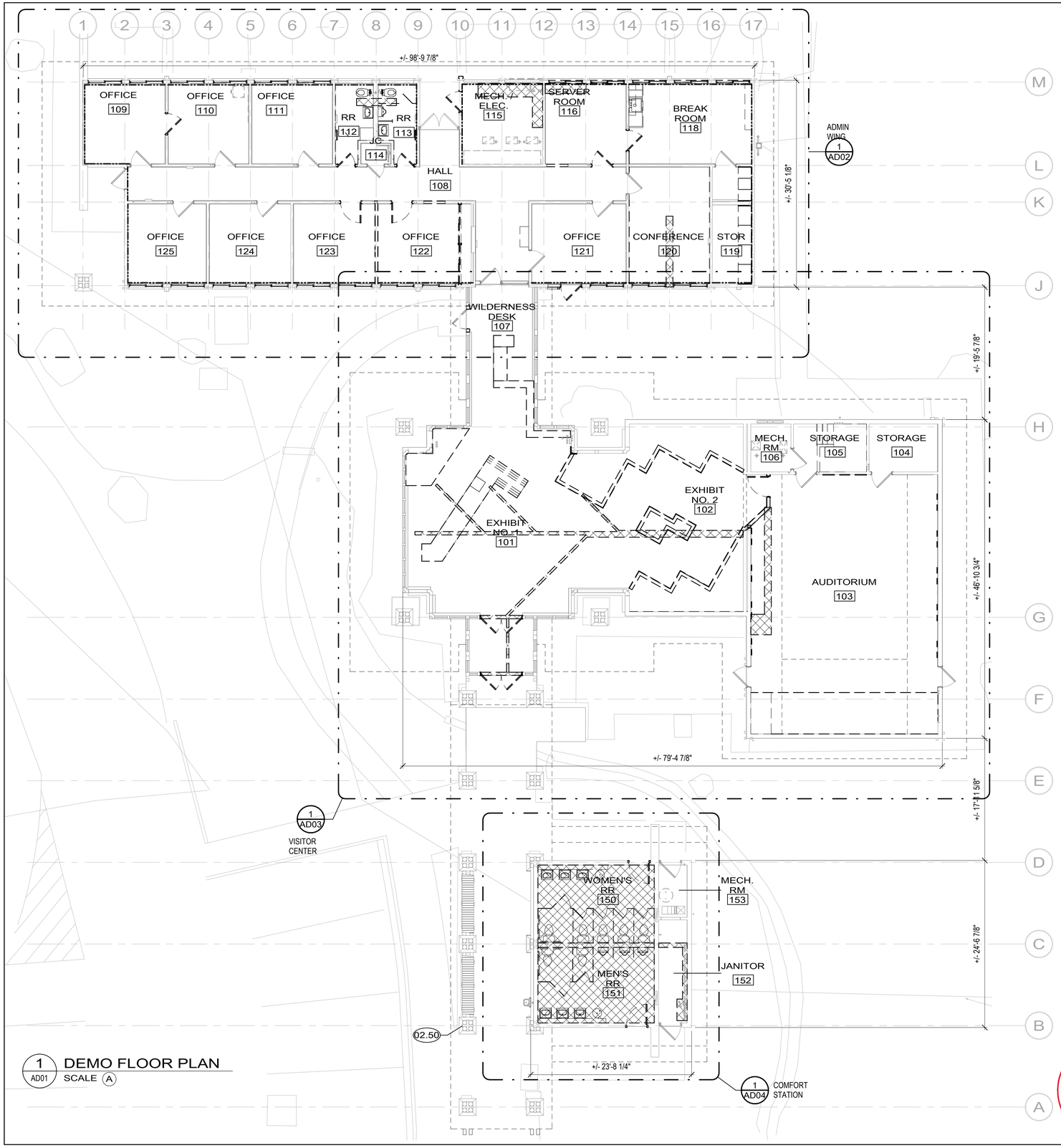

1 AD01 DEMO FLOOR PLAN
SCALE A

GENERAL NOTES

1. CONTRACTOR SHALL HOLD PRE-DEMOLITION SITE WALK WITH C.O.
2. ALL EXISTING ELEMENTS ARE SHOWN BASED ON AVAILABLE INFORMATION, NON-DESTRUCTIVE FIELD OBSERVATION, AND PREVIOUS DRAWINGS PROVIDED BY GOVERNMENT. CONTRACTOR TO FIELD VERIFY ALL EXISTING CONSTRUCTION AND NOTIFY C.O. OF ANY DISCREPANCY BETWEEN CONTRACT DOCUMENTS AND ACTUAL FIELD CONDITIONS AND REQUEST CLARIFICATION PRIOR TO PROCEEDING WITH CONSTRUCTION.
3. REFER TO CIVIL, STRUCTURAL, MECHANICAL, ELECTRICAL, AND PLUMBING DRAWINGS FOR FULL SCOPE OF THE DEMO WORK.
4. DRAWINGS SEEK TO REPRESENT THE SCOPE AND RANGE OF DEMOLITION REQUIRED BUT ARE NOT INTENDED TO BE INCLUSIVE OF ALL NECESSARY WORK. DIMENSIONS SHOWN FOR DEMOLITION ARE APPROXIMATE. VERIFY IN FIELD EXTENT OF DEMOLITION REQUIRED TO ACHIEVE <N> WORK.
5. VERIFY DIMENSIONS OF ALL EXISTING CONSTRUCTION IN FIELD. EXPECT THAT EXISTING BUILDING ELEMENTS MAY NOT BE PLUMB, LEVEL OR SQUARE.
6. ADMIN WING/VISITOR CENTER FINISHED FLOOR ELEVATION: 100'-0" = USGS 8726.5'. COMFORT STATION FINISHED FLOOR ELEVATION: 99'-3 5/8" = USGS 8725.8'. RE: CIVIL
7. REFER TO AD05 FOR CEILING DEMO SCOPE.
8. REFER TO FINISH SCHEDULE AND INTERIOR ELEVATIONS FOR ADDITIONAL FINISH REMOVAL INFORMATION.
9. REFER TO A501 FOR ADDITIONAL INFORMATION ON DOOR DEMO, SALVAGE AND REUSE.
10. REMOVE ALL ABANDONED EXTERIOR SURFACE MOUNTED HOOKS, NAILS, CONDUIT, PIPING AND EQUIPMENT, RE: ELEC AND TECH.
11. GC TO REMOVE ALL FFE PRIOR TO CONSTRUCTION. COORDINATE RELOCATION TO TEMPORARY FACILITIES, STORAGE, OR DISPOSAL WITH C.O. REFER TO SPECS.
12. GC SHALL BE RESPONSIBLE FOR PROTECTING ALL ELEMENTS/MATERIALS TO REMAIN. ALL REMOVAL/DEMO ACTIVITIES SHALL BE EXECUTED IN A MANNER WHICH PROTECTS ALL UNDERLYING AND/OR ADJACENT HISTORIC MATERIALS.
13. FOR ALL ITEMS TO BE REMOVED AND SALVAGED FOR REINSTALLATION, PROVIDE TEMPORARY, SECURE, WEATHERPROOF STORAGE UNTIL REINSTALLATION.
14. COORDINATE ALL DEMO WORK WITH HAZARDOUS ABATEMENT, RE: SPECIFICATIONS AND HAZARDOUS MATERIALS REPORT FOR KNOWN HAZARDOUS MATERIALS AND REMOVAL REQUIREMENTS. STOP WORK AND NOTIFY C.O. IF ANY ADDITIONAL SUSPECTED HAZARDOUS MATERIAL IS FOUND DURING DEMO.
15. REFER TO SHEET A511 FOR ADDITIONAL DEMO / SALVAGE INFORMATION AT WINDOW LOCATIONS.
16. REFER TO SHEET A502 FOR ADDITIONAL DEMO / SALVAGE INFORMATION AT VESTIBULE.

KEYNOTES

02.50 REMOVE AND SALVAGE <E> LIGHT FIXTURE ON COLUMN. RETURN TO PARK

LEGEND

- INSIDE FACE OF EXTERIOR WALL; REMOVE AND SALVAGE <E> WD TRIM AND WD FURRING FOR REINSTALLATION. REMOVE <E> WALL ACCESSORIES. REMOVE <E> ROLLER SHADES AND JAMB TRACKS AT EA. JAMB. REMOVE <E> GYP. BD. FINISH / WD WALL PANELS FROM FLOOR TO STRUCTURE ABOVE. REMOVE <E> WALL INSULATION FROM WALL CAVITY FROM FLOOR TO STRUCTURE ABOVE.
- <E> OVERHEAD ELEMENT TO REMAIN
- <E> ELEMENT TO REMAIN, PROTECT IN PLACE
- <E> ELEMENT TO BE REMOVED
- REMOVE <E> CONCRETE SLAB ON GRADE TO PROVIDE ACCESS FOR PLUMBING WORK OR CONDUIT ROUTING. PRIOR TO DEMO LOCATE UNDER SLAB <E> DUCTS, CONDUITS, RE: STRUCT, MECH, PLUMB AND ELEC
- <E> DOOR TO BE REMOVED, RE: DOOR SCHEDULE
- <E> DOOR TO BE REMOVED AND REINSTALLED, RE: DOOR SCHEDULE
- <E> DOOR TO REMAIN, RE: DOOR SCHEDULE
- <E> WINDOW TO BE REMOVED

SCALE: A 8 0 8 16 SCALE OF FEET

TRUE PLAN

STATE OF COLORADO 1-16-2026 ELIZABETH McCLURE HALLAS 203482 LICENSED ARCHITECT

AE FIRM PRIME: OTAK, INC. REDMOND, WA SUBCONTRACTOR: ANDERSON HALLAS ARCHITECTS GOLDEN, CO	DESIGNED: CR / VC DRAWN: VC / MS / DM TECH REVIEW: CR / EMH DATE: 01/16/2026	SUB SHEET NO. AD01	TITLE OF SHEET OVERALL DEMO FLOOR PLAN REHABILITATE KAWUNEECHE VISITOR CENTER ROCKY MOUNTAIN NATIONAL PARK	DRAWING NO. 121 165639 PMIS/PKG NO. 326235 SHEET 57 OF 177

1/20/2026 10:19:05 AM Autodesk Docs://2024-260 NPS ROMO Kawuneeche VC DD-CA wOtak/2024260 NPS ROMO KAWUNEECHE VISITOR CENTER_BIM360.rvt

1/20/2026 10:33:43 AM Autodesk Docs://2024-260 NPS ROMO Kawuneeche VC DD-CA wOtak/2024260 NPS ROMO KAWUNEECHE VISITOR CENTER_BIM360.rvt

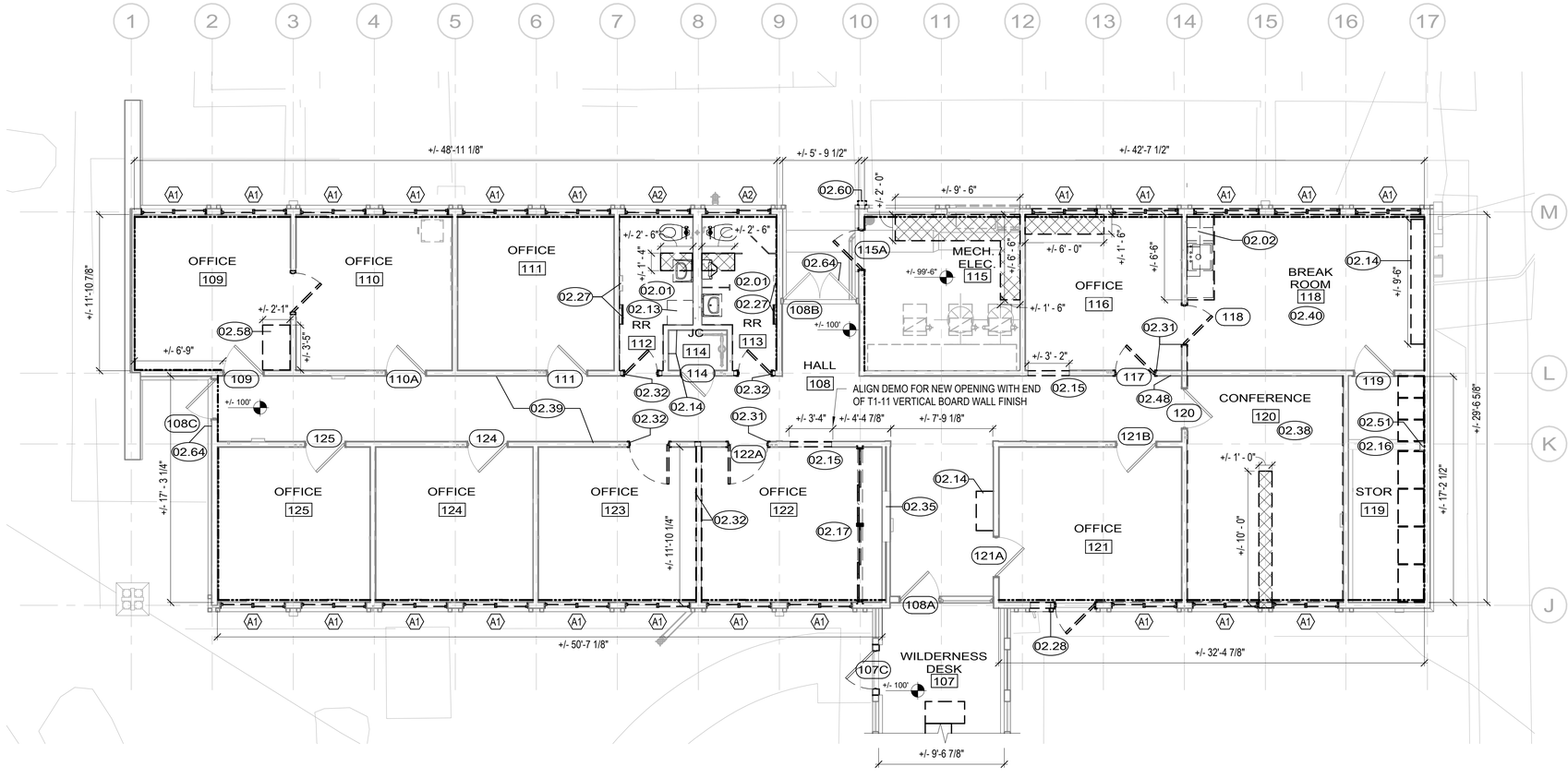

1 AD02 ENLARGED DEMO PLAN - ADMIN
SCALE (A)

GENERAL NOTES

1. CONTRACTOR SHALL HOLD PRE-DEMOLITION SITE WALK WITH C.O.
2. ALL EXISTING ELEMENTS ARE SHOWN BASED ON AVAILABLE INFORMATION, NON-DESTRUCTIVE FIELD OBSERVATION, AND PREVIOUS DRAWINGS PROVIDED BY GOVERNMENT. CONTRACTOR TO FIELD VERIFY ALL EXISTING CONSTRUCTION AND NOTIFY C.O. OF ANY DISCREPANCY BETWEEN CONTRACT DOCUMENTS AND ACTUAL FIELD CONDITIONS AND REQUEST CLARIFICATION PRIOR TO PROCEEDING WITH CONSTRUCTION.
3. REFER TO CIVIL, STRUCTURAL, MECHANICAL, ELECTRICAL, AND PLUMBING DRAWINGS FOR FULL SCOPE OF THE DEMO WORK.
4. DRAWINGS SEEK TO REPRESENT THE SCOPE AND RANGE OF DEMOLITION REQUIRED BUT ARE NOT INTENDED TO BE INCLUSIVE OF ALL NECESSARY WORK. DIMENSIONS SHOWN FOR DEMOLITION ARE APPROXIMATE. VERIFY IN FIELD EXTENT OF DEMOLITION REQUIRED TO ACHIEVE <N> WORK.
5. VERIFY DIMENSIONS OF ALL EXISTING CONSTRUCTION IN FIELD. EXPECT THAT EXISTING BUILDING ELEMENTS MAY NOT BE PLUMB, LEVEL OR SQUARE.
6. ADMIN WING/VISITOR CENTER FINISHED FLOOR ELEVATION: 100'-0" = USGS 8726.5'. COMFORT STATION FINISHED FLOOR ELEVATION: 99'-3 5/8" = USGS 8725.8'. RE: CIVIL
7. REFER TO AD05 FOR CEILING DEMO SCOPE.
8. REFER TO FINISH SCHEDULE AND INTERIOR ELEVATIONS FOR ADDITIONAL FINISH REMOVAL INFORMATION.
9. REFER TO A501 FOR ADDITIONAL INFORMATION ON DOOR DEMO, SALVAGE AND REUSE.
10. REMOVE ALL ABANDONED EXTERIOR SURFACE MOUNTED HOOKS, NAILS, CONDUIT, PIPING AND EQUIPMENT, RE: ELEC AND TECH.
11. GC TO REMOVE ALL FFE PRIOR TO CONSTRUCTION. COORDINATE RELOCATION TO TEMPORARY FACILITIES, STORAGE, OR DISPOSAL WITH C.O. REFER TO SPECS.
12. GC SHALL BE RESPONSIBLE FOR PROTECTING ALL ELEMENTS/MATERIALS TO REMAIN. ALL REMOVAL/DEMO ACTIVITIES SHALL BE EXECUTED IN A MANNER WHICH PROTECTS ALL UNDERLYING AND/OR ADJACENT HISTORIC MATERIALS.
13. FOR ALL ITEMS TO BE REMOVED AND SALVAGED FOR REINSTALLATION, PROVIDE TEMPORARY, SECURE, WEATHERPROOF STORAGE UNTIL REINSTALLATION.
14. COORDINATE ALL DEMO WORK WITH HAZARDOUS ABATEMENT, RE: SPECIFICATIONS AND HAZARDOUS MATERIALS REPORT FOR KNOWN HAZARDOUS MATERIALS AND REMOVAL REQUIREMENTS. STOP WORK AND NOTIFY C.O. IF ANY ADDITIONAL SUSPECTED HAZARDOUS MATERIAL IS FOUND DURING DEMO.
15. REFER TO SHEET A511 FOR ADDITIONAL DEMO / SALVAGE INFORMATION AT WINDOW LOCATIONS.
16. REFER TO SHEET A502 FOR ADDITIONAL DEMO / SALVAGE INFORMATION AT VESTIBULE.

KEYNOTES

02.01	REMOVE ALL <E> FINISHES DOWN TO <E> FRAMING IN RESTROOMS. REMOVE <E> PLUMBING FIXTURES, ACCESSORIES, AND STALL PARTITIONS, RE: PLUMB.
02.02	REMOVE <E> WD CASEWORK, COUNTERTOP, AND STAINLESS STEEL SINK, RE: PLUMB
02.13	CAREFULLY REMOVE <E> PLYWOOD AND GWB ENCLOSURE AND WATER HEATER. PROTECT ADJACENT FINISHES, RE: PLUMB.
02.14	CAREFULLY REMOVE <E> ADJUSTABLE WOOD SHELVES AND WALL MOUNTED METAL STANDARDS.
02.15	REMOVE <E> WALL FRAMING AND FINISHES IN PREPARATION FOR <N> DOOR. REMOVE WOOD WALL BASE TRIM.
02.16	REMOVE <E> FLOOR-TO-CEILING PLYWOOD BUILT-IN SHELVING FOR REPLACEMENT.
02.17	REMOVE <E> WOOD FRAMED INTERIOR PARTITION, SHELVING, RAISED BOTTOM AND FRAMING, AND TWO SLIDING WOOD DOORS.
02.27	REMOVE <E> WD FLOOR REGISTER (2) LOCATIONS IN EA. RR. LOCATION, RE: MECH.
02.28	REMOVE <E> DOOR AND INFILL, RE: STRUCT. PROTECT <E> FINISHES TO REMAIN.
02.31	<E> WD DOOR TRIM TO REMAIN. PROTECT IN PLACE. MODIFY AS REQUIRED FOR DOOR MODIFICATIONS.
02.32	CAREFULLY REMOVE AND SALVAGE HISTORIC WD TRIM FOR REINSTALLATION IN NEW LOCATION
02.35	<E> FIREHOSE CABINET TO REMAIN. PROTECT IN PLACE. REMOVE ANY WAYFINDING SIGNAGE RELATED TO THIS HOSE CABINET.
02.38	REMOVE NON-HISTORIC WOOD CHAIR RAIL AROUND PERIMETER OF ROOM.
02.39	REMOVE NON-HISTORIC WOOD PICTURE RAIL
02.40	REMOVE NON-HISTORIC 3" BASE TRIM AROUND PERIMETER OF ROOM. RETAIN HISTORIC TYPE A TRIM WHERE EXTANT.
02.48	REMOVE <E> FIRST AID AND DEFIBRILLATOR EQUIPMENT
02.51	<E> COLUMN TO REMAIN.
02.58	REMOVE ADDITIONAL LINOLEUM FLOORING AND METAL TRANSITION STRIPS
02.60	REMOVE <E> DOWNSPOUT
02.64	REMOVE SURFACE MOUNTED DOORBELL ON GLAZING

LEGEND

- INSIDE FACE OF EXTERIOR WALL; REMOVE AND SALVAGE <E> WD TRIM FOR REINSTALLATION. REMOVE <E> WALL ACCESSORIES AND WD OR TILE WALL BASE. REMOVE <E> ROLLER SHADES, JAMB TRACKS, CURTAIN RODS, AND BLOCKING AT EA. WINDOW JAMB. REMOVE <E> GWB FINISH / WD WALL PANELS FROM FLOOR TO STRUCTURE ABOVE. REMOVE <E> WALL INSULATION FROM WALL CAVITY FROM FLOOR TO STRUCTURE ABOVE.
- <E> ELEMENT TO REMAIN, PROTECT IN PLACE
- <E> ELEMENT TO BE REMOVED
- REMOVE <E> CONCRETE SLAB ON GRADE TO PROVIDE ACCESS FOR UTILITY WORK, RE: PLUMB & ELEC
- <E> DOOR TO BE REMOVED, RE: DOOR SCHEDULE
- <E> DOOR TO BE REMOVED AND REINSTALLED, RE: DOOR SCHEDULE
- <E> DOOR TO REMAIN, RE: DOOR SCHEDULE

SCALE: (A) 4 0 4 8 12 SCALE OF FEET

TRUE PLAN

STATE OF COLORADO
1-16-2026
ELIZABETH McCLURE HALLAS
203482
LICENSED ARCHITECT

KEY PLAN

AE FIRM
PRIME:
OTAK, INC.
REDMOND, WA

SUBCONTRACTOR:
ANDERSON HALLAS ARCHITECTS
GOLDEN, CO

DESIGNED: CR / VC
DRAWN: VC / MS / DM
TECH REVIEW: CR / EMH
DATE: 01/16/2026

SUB SHEET NO. AD02

TITLE OF SHEET
ENLARGED DEMO PLAN - ADMIN

REHABILITATE KAWUNEECHE VISITOR CENTER
ROCKY MOUNTAIN NATIONAL PARK

DRAWING NO. 121 165639
PMIS/PKG NO. 326235
SHEET 58 OF 177

1/20/2026 10:33:43 AM Autodesk Docs://2024-260 NPS ROMO Kawuneeche VC DD-CA wOtak/2024260 NPS ROMO KAWUNEECHE VISITOR CENTER_BIM360.rvt

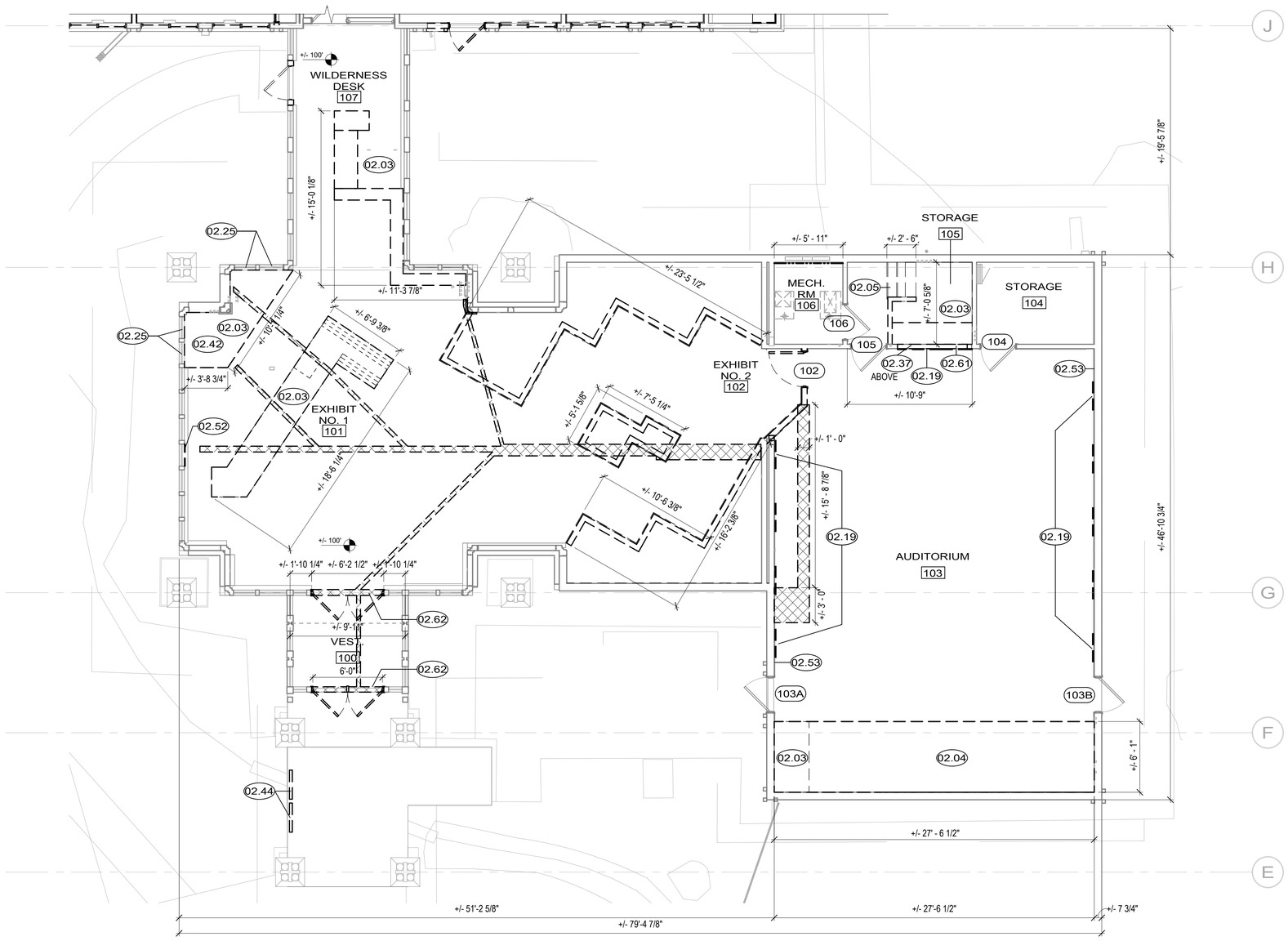

1 AD03 ENLARGED DEMO PLAN - AUDITORIUM & EXHIBIT
SCALE A

GENERAL NOTES

1. CONTRACTOR SHALL HOLD PRE-DEMOLITION SITE WALK WITH C.O.
2. ALL EXISTING ELEMENTS ARE SHOWN BASED ON AVAILABLE INFORMATION, NON-DESTRUCTIVE FIELD OBSERVATION, AND PREVIOUS DRAWINGS PROVIDED BY GOVERNMENT. CONTRACTOR TO FIELD VERIFY ALL EXISTING CONSTRUCTION AND NOTIFY C.O. OF ANY DISCREPANCY BETWEEN CONTRACT DOCUMENTS AND ACTUAL FIELD CONDITIONS AND REQUEST CLARIFICATION PRIOR TO PROCEEDING WITH CONSTRUCTION.
3. REFER TO CIVIL, STRUCTURAL, MECHANICAL, ELECTRICAL, AND PLUMBING DRAWINGS FOR FULL SCOPE OF THE DEMO WORK.
4. DRAWINGS SEEK TO REPRESENT THE SCOPE AND RANGE OF DEMOLITION REQUIRED BUT ARE NOT INTENDED TO BE INCLUSIVE OF ALL NECESSARY WORK. DIMENSIONS SHOWN FOR DEMOLITION ARE APPROXIMATE. VERIFY IN FIELD EXTENT OF DEMOLITION REQUIRED TO ACHIEVE <N> WORK.
5. VERIFY DIMENSIONS OF ALL EXISTING CONSTRUCTION IN FIELD. EXPECT THAT EXISTING BUILDING ELEMENTS MAY NOT BE PLUMB, LEVEL OR SQUARE.
6. ADMIN WING/VISITOR CENTER FINISHED FLOOR ELEVATION: 100'-0" = USGS 8726.5'. COMFORT STATION FINISHED FLOOR ELEVATION: 99'-3 5/8" = USGS 8725.8'. RE: CIVIL
7. REFER TO AD05 FOR CEILING DEMO SCOPE.
8. REFER TO FINISH SCHEDULE AND INTERIOR ELEVATIONS FOR ADDITIONAL FINISH REMOVAL INFORMATION.
9. REFER TO A501 FOR ADDITIONAL INFORMATION ON DOOR DEMO, SALVAGE AND REUSE.
10. REMOVE ALL ABANDONED EXTERIOR SURFACE MOUNTED HOOKS, NAILS, CONDUIT, PIPING AND EQUIPMENT, RE: ELEC AND TECH.
11. GC TO REMOVE ALL FFE PRIOR TO CONSTRUCTION. COORDINATE RELOCATION TO TEMPORARY FACILITIES, STORAGE, OR DISPOSAL WITH C.O. REFER TO SPECS.
12. GC SHALL BE RESPONSIBLE FOR PROTECTING ALL ELEMENTS/MATERIALS TO REMAIN. ALL REMOVAL/DEMO ACTIVITIES SHALL BE EXECUTED IN A MANNER WHICH PROTECTS ALL UNDERLYING AND/OR ADJACENT HISTORIC MATERIALS.
13. FOR ALL ITEMS TO BE REMOVED AND SALVAGED FOR REINSTALLATION, PROVIDE TEMPORARY, SECURE, WEATHERPROOF STORAGE UNTIL REINSTALLATION.
14. COORDINATE ALL DEMO WORK WITH HAZARDOUS ABATEMENT, RE: SPECIFICATIONS AND HAZARDOUS MATERIALS REPORT FOR KNOWN HAZARDOUS MATERIALS AND REMOVAL REQUIREMENTS. STOP WORK AND NOTIFY C.O. IF ANY ADDITIONAL SUSPECTED HAZARDOUS MATERIAL IS FOUND DURING DEMO.
15. REFER TO SHEET A511 FOR ADDITIONAL DEMO / SALVAGE INFORMATION AT WINDOW LOCATIONS.
16. REFER TO SHEET A502 FOR ADDITIONAL DEMO / SALVAGE INFORMATION AT VESTIBULE.

KEYNOTES

02.03	REMOVE <E> WD CASEWORK
02.04	REMOVE <E> RAISED WD PLATFORM +/-8" TALL, PADDING, AND CARPET.
02.05	REMOVE <E> WD STAIRCASE, HANDRAIL, AND RAISED FLOOR.
02.19	<E> ACOUSTIC WALL PANELS TO BE REMOVED.
02.25	REMOVE <E> T1-11 INFILL AT <E> WINDOW LOCATION. PREP AREA FOR <N> WINDOW.
02.37	REMOVE <E> PROJECTOR ROOM WINDOW AND TRIM
02.42	<E> NOAA PANEL TO REMAIN OPERATIONAL AND ACCESSIBLE TO PARK STAFF AT ALL TIMES DURING CONSTRUCTION, COORDINATE ACCESS WITH C.O. PROTECT IN PLACE. RE: TECH
02.44	REMOVE NON-HISTORIC SIGNAGE AND WOOD SUPPORT RAILS.
02.52	REMOVE NON-HISTORIC WD CHAIR RAIL
02.53	CAREFULLY REMOVE <E> NON-HISTORIC FRP WALL FINISH
02.61	CAREFULLY REMOVE +/-30" X 40" WALL FINISH TO CREATE OPENING FOR NEW ACCESS DOOR
02.62	REMOVE <E> SLAB AND THRESHOLD BETWEEN JAMBS FOR INSTALL OF CONDUIT AND CLOSER UNITS, DO NOT CUT INTO FOUNDATION

LEGEND

- INSIDE FACE OF EXTERIOR WALL; REMOVE AND SALVAGE <E> WD TRIM FOR REINSTALLATION. REMOVE <E> GWB FINISH AND CAVITY INSULATION FROM FLOOR TO STRUCTURE ABOVE.
- <E> WALL TO REMAIN, PROTECT IN PLACE
- <E> ELEMENT TO BE REMOVED
- REMOVE <E> CONCRETE SLAB ON GRADE TO PROVIDE ACCESS FOR PLUMBING WORK OR CONDUIT ROUTING. PRIOR TO DEMO LOCATE UNDER SLAB <E> DUCTS, CONDUITS, RE: STRUCT, MECH, PLUMB AND ELEC
- <E> DOOR TO BE REMOVED, RE: DOOR SCHEDULE
- <E> DOOR TO BE REMOVED AND REINSTALLED, RE: DOOR SCHEDULE
- <E> DOOR TO REMAIN, RE: DOOR SCHEDULE

SCALE: A 4 0 4 8 12 SCALE OF FEET TRUE PLAN

STATE OF COLORADO 1/16/2026 ELIZABETH McCLURE HALLAS 203482 LICENSED ARCHITECT

KEY PLAN

AE FIRM
PRIME: OTAK, INC. REDMOND, WA
SUBCONTRACTOR: ANDERSON HALLAS ARCHITECTS GOLDEN, CO

DESIGNED: CR / VC
DRAWN: VC / MS / DM
TECH REVIEW: CR / EMH
DATE: 01/16/2026

SUB SHEET NO. AD03

TITLE OF SHEET
ENLARGED DEMO PLAN - AUDITORIUM & EXHIBIT
REHABILITATE KAWUNEECHE VISITOR CENTER
ROCKY MOUNTAIN NATIONAL PARK

DRAWING NO. 121 165639
PMIS/PKG NO. 326235
SHEET 59 OF 177

1/20/2026 10:33:44 AM Autodesk Docs://2024-260 NPS ROMO Kawuneeche VC DD-CA wOtak/2024260 NPS ROMO KAWUNEECHE VISITOR CENTER_BIM360.rvt

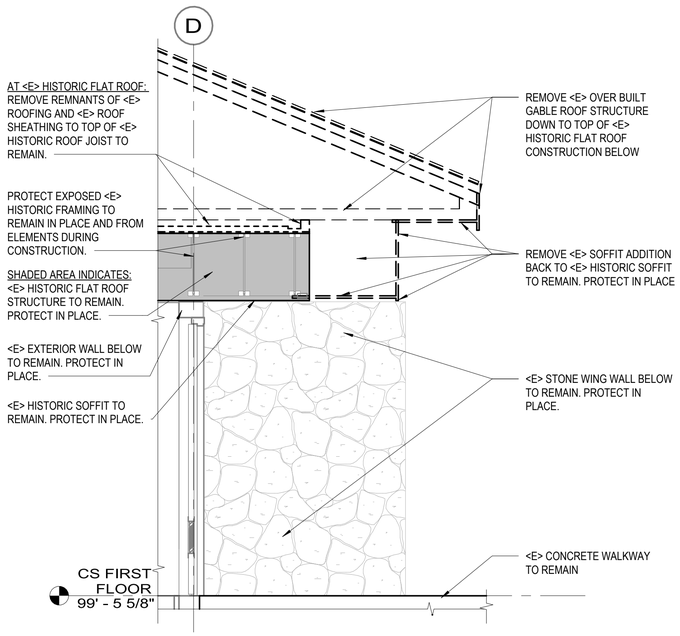

2 AD04 DEMO WALL SECTION AT COMFORT STATION
SCALE (B)

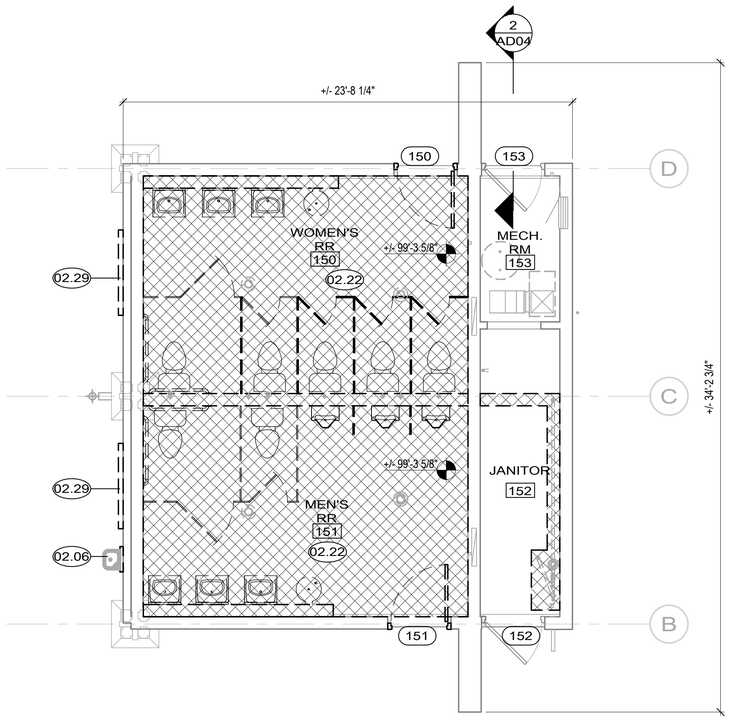

1 AD04 ENLARGED DEMO PLAN - COMFORT STATION
SCALE (A)

GENERAL NOTES

1. CONTRACTOR TO HOLD PRE-DEMOLITION SITE WALK WITH C.O.
2. ALL EXISTING ELEMENTS ARE SHOWN BASED ON AVAILABLE INFORMATION, NON-DESTRUCTIVE FIELD OBSERVATION, AND PREVIOUS DRAWINGS PROVIDED BY GOVERNMENT. CONTRACTOR TO FIELD VERIFY ALL EXISTING CONSTRUCTION AND NOTIFY C.O. OF ANY DISCREPANCY BETWEEN CONTRACT DOCUMENTS AND ACTUAL FIELD CONDITIONS AND REQUEST CLARIFICATION PRIOR TO PROCEEDING WITH CONSTRUCTION.
3. REFER TO CIVIL, STRUCTURAL, MECHANICAL, ELECTRICAL, AND PLUMBING DRAWINGS FOR FULL SCOPE OF THE DEMO WORK.
4. DRAWINGS SEEK TO REPRESENT THE SCOPE AND RANGE OF DEMOLITION REQUIRED BUT ARE NOT INTENDED TO BE INCLUSIVE OF ALL NECESSARY WORK. DIMENSIONS SHOWN FOR DEMOLITION ARE APPROXIMATE. VERIFY IN FIELD EXTENT OF DEMOLITION REQUIRED TO ACHIEVE <N> WORK.
5. VERIFY DIMENSIONS OF ALL EXISTING CONSTRUCTION IN FIELD. EXPECT THAT EXISTING BUILDING ELEMENTS MAY NOT BE PLUMB, LEVEL OR SQUARE.
6. ADMIN WING/VISITOR CENTER FINISHED FLOOR ELEVATION: 100'-0" = USGS 8726.5'. COMFORT STATION FINISHED FLOOR ELEVATION: 99'-3 5/8" = USGS 8725.8'. RE: CIVIL
7. REFER TO AD05 FOR CEILING DEMO SCOPE.
8. REFER TO FINISH SCHEDULE AND INTERIOR ELEVATIONS FOR ADDITIONAL FINISH REMOVAL INFORMATION.
9. REFER TO A501 FOR ADDITIONAL INFORMATION ON DOOR DEMO, SALVAGE AND REUSE.
10. REMOVE ALL ABANDONED EXTERIOR SURFACE MOUNTED HOOKS, NAILS, CONDUIT, PIPING AND EQUIPMENT, RE: ELEC, MECH, AND PLUMB.
11. GC TO REMOVE ALL FFE PRIOR TO CONSTRUCTION.
12. GC SHALL BE RESPONSIBLE FOR PROTECTING ALL ELEMENTS/MATERIALS TO REMAIN. ALL REMOVAL/DEMO ACTIVITIES SHALL BE EXECUTED IN A MANNER WHICH PROTECTS ALL UNDERLYING AND/OR ADJACENT HISTORIC MATERIALS.
13. FOR ALL ITEMS TO BE REMOVED AND SALVAGED FOR REINSTALLATION, PROVIDE TEMPORARY, SECURE, WEATHERPROOF STORAGE UNTIL REINSTALLATION.
14. COORDINATE ALL DEMO WORK WITH HAZARDOUS ABATEMENT, RE: SPECIFICATIONS AND HAZARDOUS MATERIALS REPORT FOR KNOWN HAZARDOUS MATERIALS AND REMOVAL REQUIREMENTS. STOP WORK AND NOTIFY C.O. IF ANY ADDITIONAL SUSPECTED HAZARDOUS MATERIAL IS FOUND DURING DEMO.

KEYNOTES

02.06	<E> DRINKING FOUNTAIN TO BE REMOVED, RE: PLUMB
02.22	REMOVE ALL <E> WALL AND FLOOR FINISHES IN RESTROOMS. REMOVE <E> PLUMBING FIXTURES, ACCESSORIES, AND STALL PARTITIONS, RE: PLUMB.
02.29	REMOVE <E> WALL MOUNTED BULLETIN BOARD AND MTL CASE

LEGEND

- <E> ELEMENT TO REMAIN, PROTECT IN PLACE
- <E> ELEMENT TO BE REMOVED
- REMOVE <E> CONCRETE SLAB ON GRADE TO PROVIDE ACCESS FOR PLUMBING WORK, RE: PLUMB
- <E> DOOR TO BE REMOVED, RE: DOOR SCHEDULE
- <E> DOOR TO BE REMOVED AND REINSTALLED, RE: DOOR SCHEDULE
- <E> DOOR TO REMAIN, RE: DOOR SCHEDULE

SCALE: (B) 2 0 2 4 SCALE OF FEET
SCALE: (A) 8 0 8 16 SCALE OF FEET
TRUE PLAN

STATE OF COLORADO
1-16-2026
ELIZABETH McCLURE HALLAS
203482
LICENSED ARCHITECT

KEY PLAN

AE FIRM
PRIME:
OTAK, INC.
REDMOND, WA
SUBCONTRACTOR:
ANDERSON HALLAS ARCHITECTS
GOLDEN, CO

DESIGNED: CR / VC
DRAWN: VC / MS / DM
TECH REVIEW: CR / EMH
DATE: 01/16/2026

SUB SHEET NO. AD04

TITLE OF SHEET
ENLARGED DEMO PLANS - COMFORT STATION
REHABILITATE KAWUNEECHE VISITOR CENTER
ROCKY MOUNTAIN NATIONAL PARK

DRAWING NO. 121 165639
PMIS/PKG NO. 326235
SHEET 60 OF 177

1/20/2026 10:19:11 AM Autodesk Docs://2024-260 NPS ROMO Kawuneeche VC DD-CA wOtak/2024260 NPS ROMO KAWUNEECHE VISITOR CENTER_BIM360.rvt

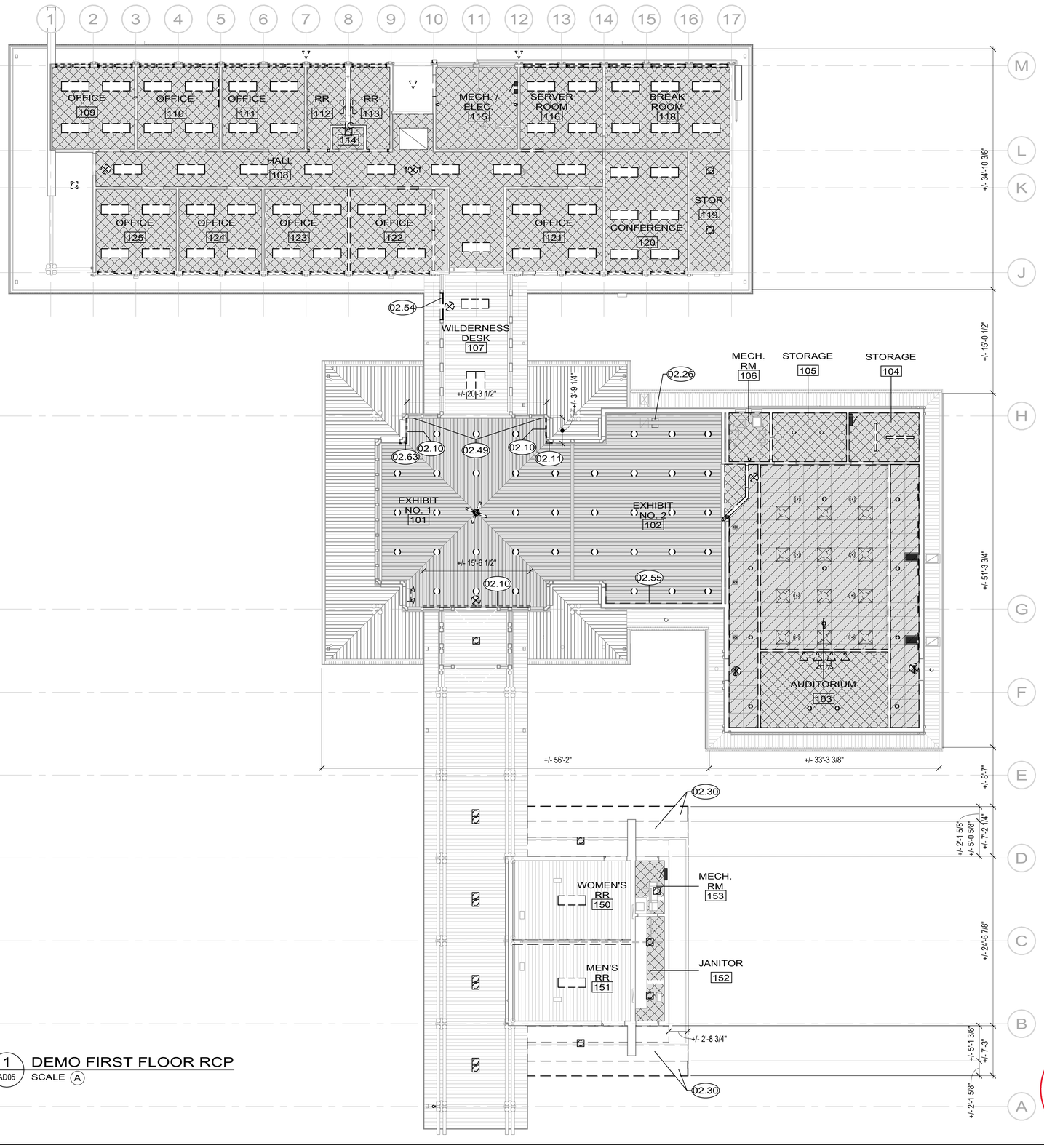

1 AD05 DEMO FIRST FLOOR RCP
SCALE A

GENERAL NOTES

1. CONTRACTOR TO HOLD PRE-DEMOLITION SITE WALK WITH C.O.
2. ALL EXISTING ELEMENTS ARE SHOWN BASED ON AVAILABLE INFORMATION, NON-DESTRUCTIVE FIELD OBSERVATION, AND PREVIOUS DRAWINGS PROVIDED BY GOVERNMENT. CONTRACTOR TO FIELD VERIFY ALL EXISTING CONSTRUCTION AND NOTIFY C.O. OF ANY DISCREPANCY BETWEEN CONTRACT DOCUMENTS AND ACTUAL FIELD CONDITIONS AND REQUEST CLARIFICATION PRIOR TO PROCEEDING WITH CONSTRUCTION.
3. REFER TO STRUCTURAL, MECHANICAL, ELECTRICAL, AND PLUMBING DRAWINGS FOR FULL SCOPE OF THE DEMO WORK.
4. DRAWINGS SEEK TO REPRESENT THE SCOPE AND RANGE OF DEMOLITION REQUIRED BUT ARE NOT INTENDED TO BE INCLUSIVE OF ALL NECESSARY WORK. DIMENSIONS SHOWN FOR DEMOLITION ARE APPROXIMATE. VERIFY IN FIELD EXTENT OF DEMOLITION REQUIRED TO ACHIEVE <N> WORK.
5. VERIFY DIMENSIONS OF ALL EXISTING CONSTRUCTION IN FIELD. EXPECT THAT EXISTING BUILDING ELEMENTS MAY NOT BE PLUMB, LEVEL OR SQUARE.
6. ADMIN WING/VISITOR CENTER FINISHED FLOOR ELEVATION: 100'-0" = USGS 8726.5'. COMFORT STATION FINISHED FLOOR ELEVATION: 99'-3 5/8" = USGS 8725.8'. RE: CIVIL
7. REMOVE ALL ABANDONED EXTERIOR SURFACE MOUNTED HOOKS, NAILS, CONDUIT, PIPING AND EQUIPMENT, RE: ELEC, MECH, AND PLUMB.
8. GC SHALL BE RESPONSIBLE FOR PROTECTING ALL ELEMENTS/MATERIALS TO REMAIN. ALL REMOVAL/DEMO ACTIVITIES SHALL BE EXECUTED IN A MANNER WHICH PROTECTS ALL UNDERLYING AND/OR ADJACENT HISTORIC MATERIALS.
9. FOR ALL ITEMS TO BE REMOVED AND SALVAGED FOR REINSTALLATION, PROVIDE TEMPORARY, SECURE, WEATHERPROOF STORAGE UNTIL REINSTALLATION.
10. COORDINATE ALL DEMO WORK WITH HAZARDOUS ABATEMENT, RE: SPECIFICATIONS AND HAZARDOUS MATERIALS REPORT FOR KNOWN HAZARDOUS MATERIALS AND REMOVAL REQUIREMENTS. STOP WORK AND NOTIFY C.O. IF ANY ADDITIONAL SUSPECTED HAZARDOUS MATERIAL IS FOUND DURING DEMO.

KEYNOTES

02.10	CAREFULLY REMOVE <E> +/- 2' TALL T1-11 WALL PANEL AND ASSOCIATED FASTENERS
02.11	CAREFULLY REMOVE <E> NON-HISTORIC PANEL WRAP AROUND CORNER MULLION
02.26	<E> CEILING ACCESS HATCH. CATALOG & REMOVE HISTORIC 1X6 BOARDS. SALVAGE FOR REINSTALLATION.
02.30	REMOVE <E> STANDING SEAM METAL ROOFING, SHEATHING, TRUSSES, SOFFIT FRAMING, AND FASCIA AND SOFFIT, RE: STRUCT.
02.49	PROTECT <E> +/- 2' TALL T1-11 WALL PANEL IN PLACE.
02.54	REMOVE NON-HISTORIC WD TRIM AT DOOR HEADER
02.55	CAREFULLY REMOVE <E> PANEL AT INTERIOR FACE OF CLERESTORY WINDOWS
02.63	CAREFULLY REMOVE <E> NON-HISTORIC PANEL WRAP AROUND CORNER MULLION ABOVE HORIZONTAL BAND ONLY. RETAIN PANEL WRAP BELOW BAND.

NON-HISTORIC WD TRIM TO BE REMOVED AT DR 107B. REFER TO KEYNOTE 02.54

TYP <E> NON-HISTORIC PANEL WRAP AROUND CORNER MULLION IN EXHIBIT NO.1. TO BE REMOVED. REFER TO KEYNOTE 02.11

TYP <E> T1-11 WALL PANEL TO REMOVE. REFER TO KEYNOTE 02.10

RETAIN <E> NON-HISTORIC PANEL WRAP AROUND CORNER MULLION (THIS CORNER AND BELOW BAND ONLY). REMOVE UPPER PANEL WRAP. REFER TO KEYNOTE 02.63

LEGEND

- <E> WALL, CEILING, COLUMN TO REMAIN, PROTECT IN PLACE
- <E> GYPSUM BOARD CEILING TO BE REMOVED
- CATALOG AND REMOVE <E> HISTORIC 1X6 BOARD CEILING, REMOVE FOR REHABILITATION AND REINSTALLATION, PLYWOOD SUBSTRATE TO BE REMOVED
- <E> HISTORIC 1X6 BOARD CEILING TO REMAIN, PROTECT IN PLACE
- <E> HISTORIC WOOD BOARD CEILING TO REMAIN, PROTECT IN PLACE
- <E> ELEMENT TO BE REMOVED
- REMOVE <E> CEILING TILES AND SUSPENDED TRACK SYSTEM

ELECTRICAL, LIGHTING, AND FIRE PROTECTION ELEMENTS SHOWN FOR REFERENCE. SEE DISCIPLINE SHEETS FOR SPECIFIC INFORMATION.

SCALE: A 8 0 8 16 SCALE OF FEET

TRUE PLAN

STATE OF COLORADO 1-16-2026 ELIZABETH McCLURE HALLAS 203482 LICENSED ARCHITECT

AE FIRM PRIME: OTAK, INC. REDMOND, WA SUBCONTRACTOR: ANDERSON HALLAS ARCHITECTS GOLDEN, CO	DESIGNED: CR / VC DRAWN: VC / MS / DM TECH REVIEW: CR / EMH DATE: 01/16/2026	SUB SHEET NO. AD05	TITLE OF SHEET OVERALL DEMO REFLECTED CEILING PLAN REHABILITATE KAWUNEECHE VISITOR CENTER ROCKY MOUNTAIN NATIONAL PARK	DRAWING NO. 121 165639 PMIS/PKG NO. 326235 SHEET 61 OF 177

2 AD10 DEMO ROOF PLAN
SCALE A

GENERAL NOTES

1. CONTRACTOR TO HOLD PRE-DEMOLITION SITE WALK WITH C.O.
2. ALL EXISTING ELEMENTS ARE SHOWN BASED ON AVAILABLE INFORMATION, NON-DESTRUCTIVE FIELD OBSERVATION, AND PREVIOUS DRAWINGS PROVIDED BY GOVERNMENT. CONTRACTOR TO FIELD VERIFY ALL EXISTING CONSTRUCTION AND NOTIFY C.O. OF ANY DISCREPANCY BETWEEN CONTRACT DOCUMENTS AND ACTUAL FIELD CONDITIONS AND REQUEST CLARIFICATION PRIOR TO PROCEEDING WITH CONSTRUCTION.
3. REFER TO STRUCTURAL, MECHANICAL, ELECTRICAL, AND PLUMBING DRAWINGS FOR FULL SCOPE OF THE DEMO WORK.
4. DRAWINGS SEEK TO REPRESENT THE SCOPE AND RANGE OF DEMOLITION REQUIRED BUT ARE NOT INTENDED TO BE INCLUSIVE OF ALL NECESSARY WORK. DIMENSIONS SHOWN FOR DEMOLITION ARE APPROXIMATE. VERIFY IN FIELD EXTENT OF DEMOLITION REQUIRED TO ACHIEVE <N> WORK.
5. VERIFY DIMENSIONS OF ALL EXISTING CONSTRUCTION IN FIELD. EXPECT THAT EXISTING BUILDING ELEMENTS MAY NOT BE PLUMB, LEVEL OR SQUARE.
6. ADMIN WING/VISITOR CENTER FINISHED FLOOR ELEVATION: 100'-0" = USGS 8726.5'. COMFORT STATION FINISHED FLOOR ELEVATION: 99'-3 5/8" = USGS 8725.8'. RE: CIVIL
7. REMOVE ALL ABANDONED EXTERIOR SURFACE MOUNTED HOOKS, NAILS, CONDUIT, PIPING AND EQUIPMENT, RE: ELEC, MECH, AND PLUMB.
8. GC SHALL BE RESPONSIBLE FOR PROTECTING ALL ELEMENTS/MATERIALS TO REMAIN. ALL REMOVAL/DEMO ACTIVITIES SHALL BE EXECUTED IN A MANNER WHICH PROTECTS ALL UNDERLYING AND/OR ADJACENT HISTORIC MATERIALS.
9. FOR ALL ITEMS TO BE REMOVED AND SALVAGED FOR REINSTALLATION, PROVIDE TEMPORARY, SECURE, WEATHERPROOF STORAGE UNTIL REINSTALLATION.
10. COORDINATE ALL DEMO WORK WITH HAZARDOUS ABATEMENT, RE: SPECIFICATIONS AND HAZARDOUS MATERIALS REPORT FOR KNOWN HAZARDOUS MATERIALS AND REMOVAL REQUIREMENTS. STOP WORK AND NOTIFY C.O. IF ANY ADDITIONAL SUSPECTED HAZARDOUS MATERIAL IS FOUND DURING DEMO.
11. PROTECT ALL <E> ROOFING TO REMAIN FROM DAMAGE DURING CONSTRUCTION.

LEGEND

<E> ROOFING TO REMAIN, PROTECT IN PLACE

REMOVE <E> STANDING SEAM METAL ROOFING, SHEATHING, AND GABLE TRUSSES, RE: STRUCT. AT <E> HISTORIC FLAT ROOF (BELOW GABLE ROOF) REMOVE <E> ROOFING AND SHEATHING. RETAIN <E> HISTORIC FLAT ROOF STRUCTURE AND PROTECT IN PLACE.

REMOVE <E> EPDM ROOFING AND SHEATHING AS NEEDED FOR INSTALLATION OF <N> RELIEF HOOD, RE: MECH

<E> ROOF DRAIN, PROTECT IN PLACE

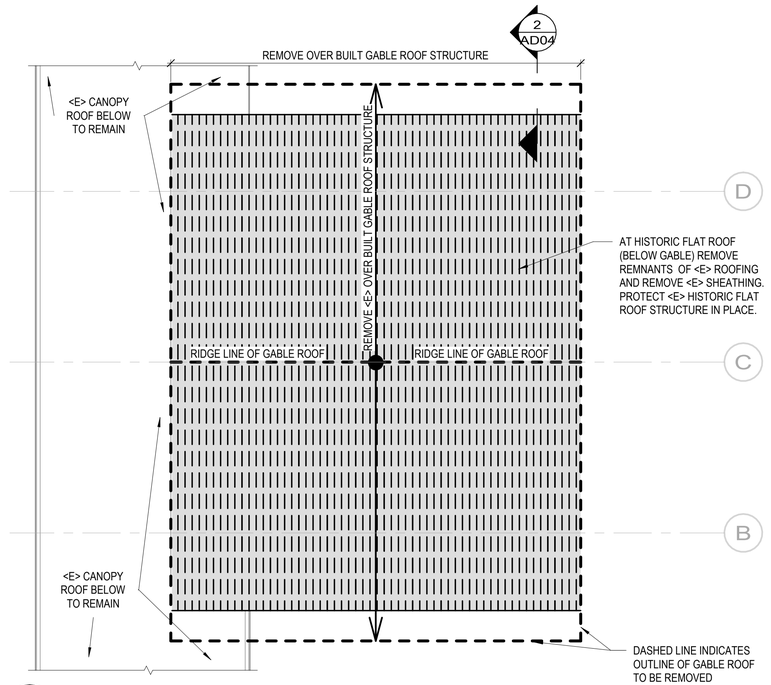

1 AD10 DEMO ROOF PLAN AT COMFORT STATION
SCALE B

SCALE: B 4 0 4 8 12 SCALE OF FEET
SCALE: A 8 0 8 16 SCALE OF FEET
TRUE PLAN

STATE OF COLORADO
1-16-2026
ELIZABETH McCLURE HALLAS
203482
LICENSED ARCHITECT

AE FIRM PRIME: OTAK, INC. REDMOND, WA SUBCONTRACTOR: ANDERSON HALLAS ARCHITECTS GOLDEN, CO	DESIGNED: CR / VC DRAWN: VC / MS / DM TECH REVIEW: CR / EMH DATE: 01/16/2026	SUB SHEET NO. AD10	TITLE OF SHEET OVERALL DEMO ROOF PLAN REHABILITATE KAWUNEECHE VISITOR CENTER ROCKY MOUNTAIN NATIONAL PARK	DRAWING NO. 121 165639 PMIS/PKG NO. 326235 SHEET 62 OF 177

1/20/2026 10:19:13 AM Autodesk Docs://2024-260 NPS ROMO Kawuneeche VC DD-CA wOtak/2024260 NPS ROMO KAWUNEECHE VISITOR CENTER_BIM360.rvt

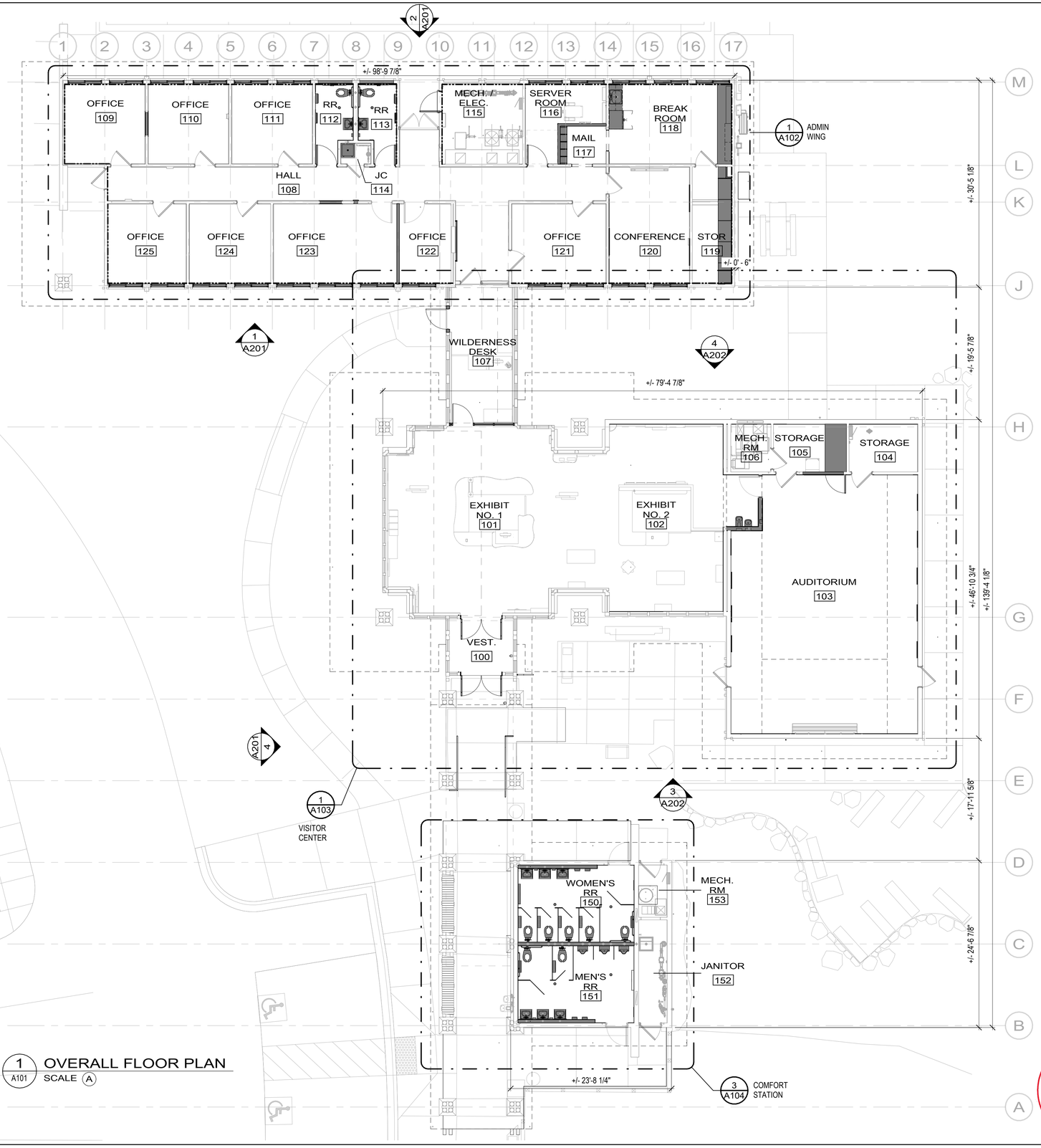

1 A101 OVERALL FLOOR PLAN
SCALE A

GENERAL NOTES

1. ADMIN WING/VISITOR CENTER FINISHED FLOOR ELEVATION: 100'-0" = USGS 8726.5'. COMFORT STATION FINISHED FLOOR ELEVATION: 99'-3 5/8" = USGS 8725.8'. RE: CIVIL
2. CONTRACTOR SHALL BE RESPONSIBLE FOR PROTECTING ALL ELEMENTS/MATERIALS TO REMAIN.
3. EXHIBIT DESIGN SHOWN FOR REFERENCE ONLY. REFER TO EXHIBIT DESIGN PACKAGE BY OTHERS FOR DETAILS. INFRASTRUCTURE TO BE PROVIDED BY THIS PROJECT. EXHIBIT FABRICATION AND INSTALLATION BY OTHERS.
4. ALL EXISTING ELEMENTS ARE SHOWN BASED ON AVAILABLE INFORMATION, NON-DESTRUCTIVE FIELD OBSERVATION AND PREVIOUS DRAWINGS PROVIDED BY GOVERNMENT. CONTRACTOR TO FIELD VERIFY ALL EXISTING CONSTRUCTION AND NOTIFY ARCHITECT/C.O. OF ANY DISCREPANCY BETWEEN CONTRACT DOCUMENTS AND ACTUAL FIELD CONDITIONS AND REQUEST CLARIFICATION PRIOR TO PROCEEDING WITH CONSTRUCTION.
5. REFER TO CIVIL, STRUCTURAL, MECHANICAL, PLUMBING, ELECTRICAL, TECHNOLOGY, FIRE PROTECTION, AND FIRE ALARM DRAWINGS FOR ADDITIONAL SCOPE.
6. ALL CONSTRUCTION ACTIVITIES SHALL BE EXECUTED IN A MANNER WHICH PROTECTS ALL UNDERLYING HISTORIC MATERIALS.
7. ALL WORK TO COMPLY WITH SECRETARY OF INTERIOR STANDARDS FOR REHABILITATION.
8. REFER TO SHEET G005 FOR WALL TYPES.
9. REFER TO WINDOW AND DOOR SCHEDULE FOR SCOPE OF <N> AND REHABILITATION WORK.
10. ALL EXTERIOR FASCIAS, SOFFITS, COLUMNS, BEAMS TO REMAIN SHALL BE PREPARED AND REFINISHED.
11. REFER TO FINISH PLAN AND SCHEDULE FOR ADDITIONAL INFORMATION.
12. VERIFY DIMENSIONS OF ALL EXISTING CONSTRUCTION IN FIELD. EXPECT THAT EXISTING BUILDING ELEMENTS MAY NOT BE PLUMB, LEVEL OR SQUARE.
13. PATCH AND REPAIR ALL FINISHES IMPACTED BY NEW WORK TO MATCH ADJACENT IN MATERIAL, COLOR, TEXTURE AND FINISH. TRANSITION <N> FINISHES TO BLEND AND APPEAR SEAMLESS. PROVIDE SAMPLES TO C.O. FOR APPROVAL.
14. PATCH ALL MISCELLANEOUS HOLES, TO MATCH ADJACENT, UON.
15. PAINT ALL EXPOSED CONDUIT TO MATCH ADJACENT FINISH.
16. NEW PATHS AND SITE ELEMENTS ARE SHOWN FOR REFERENCE ONLY, RE: CIVIL FOR SITE ELEMENTS AND ABAAS ROUTES.

LEGEND

- INTERIOR FACE OF EXTERIOR WALL: INSTALL MINERAL WOOL BOARD INSULATION FROM FLOOR TO STRUCTURE ABOVE WITHIN EXISTING WALL CAVITIES WITH SMART VAPOR RETARDER AT INTERIOR, SEAL ALL <E> PENETRATIONS AND GAPS IN EXTERIOR SHEATHING (FROM INSIDE WALL CAVITY). INSTALL <N> GWB WALL FINISH FROM FLOOR TO STRUCTURE ABOVE. REINSTALL SALVAGED WD TRIM AND WD FURRING. RE: WALL TYPE 2.1 AND FINISH SCHEDULE.
- <E> ELEMENT TO REMAIN
- <N> CONSTRUCTION, RE: G005 FOR WALL ASSEMBLIES
- <N> WINDOW, RE: A510, WINDOW SCHEDULE
- <N> DOOR, RE: A501, DOOR SCHEDULE
- <E> SALVAGED DOOR REINSTALLED, RE: DOOR SCHEDULE
- <E> DOOR TO REMAIN, RE: A501, DOOR SCHEDULE

SCALE: A 8 0 8 16 SCALE OF FEET

TRUE PLAN

STATE OF COLORADO 1-16-2026 ELIZABETH McCLURE HALLAS 203482 LICENSED ARCHITECT

AE FIRM PRIME: OTAK, INC. REDMOND, WA SUBCONTRACTOR: ANDERSON HALLAS ARCHITECTS GOLDEN, CO	DESIGNED: CR / VC DRAWN: VC / MS / DM TECH REVIEW: CR / EMH DATE: 01/16/2026	SUB SHEET NO. A101	TITLE OF SHEET OVERALL FLOOR PLAN REHABILITATE KAWUNEECHE VISITOR CENTER ROCKY MOUNTAIN NATIONAL PARK	DRAWING NO. 121 165639 PMIS/PKG NO. 326235 SHEET 63 OF 177

1/20/2026 10:19:15 AM Autodesk Docs://2024-260 NPS ROMO Kawuneeche VC DD-CA wOtak/2024260 NPS ROMO KAWUNEECHE VISITOR CENTER_BIM360.rvt

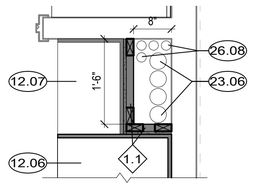

3 A102 ENLARGED PLAN - ADMIN - STORAGE
SCALE C

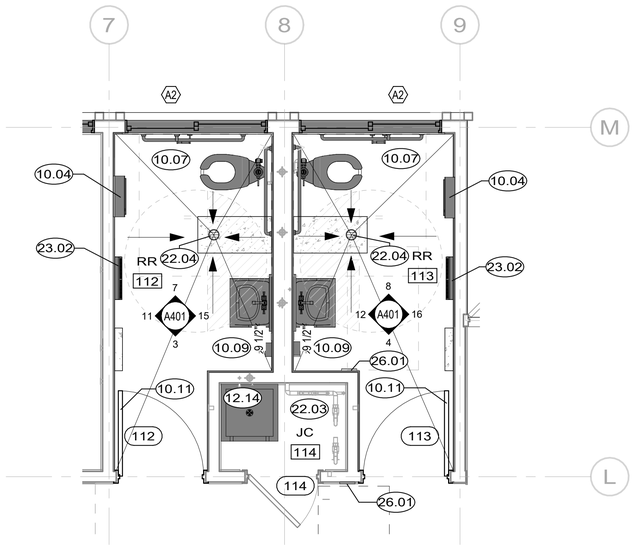

2 A102 ENLARGED PLAN - ADMIN - RR NO. 112 AND 113
SCALE B

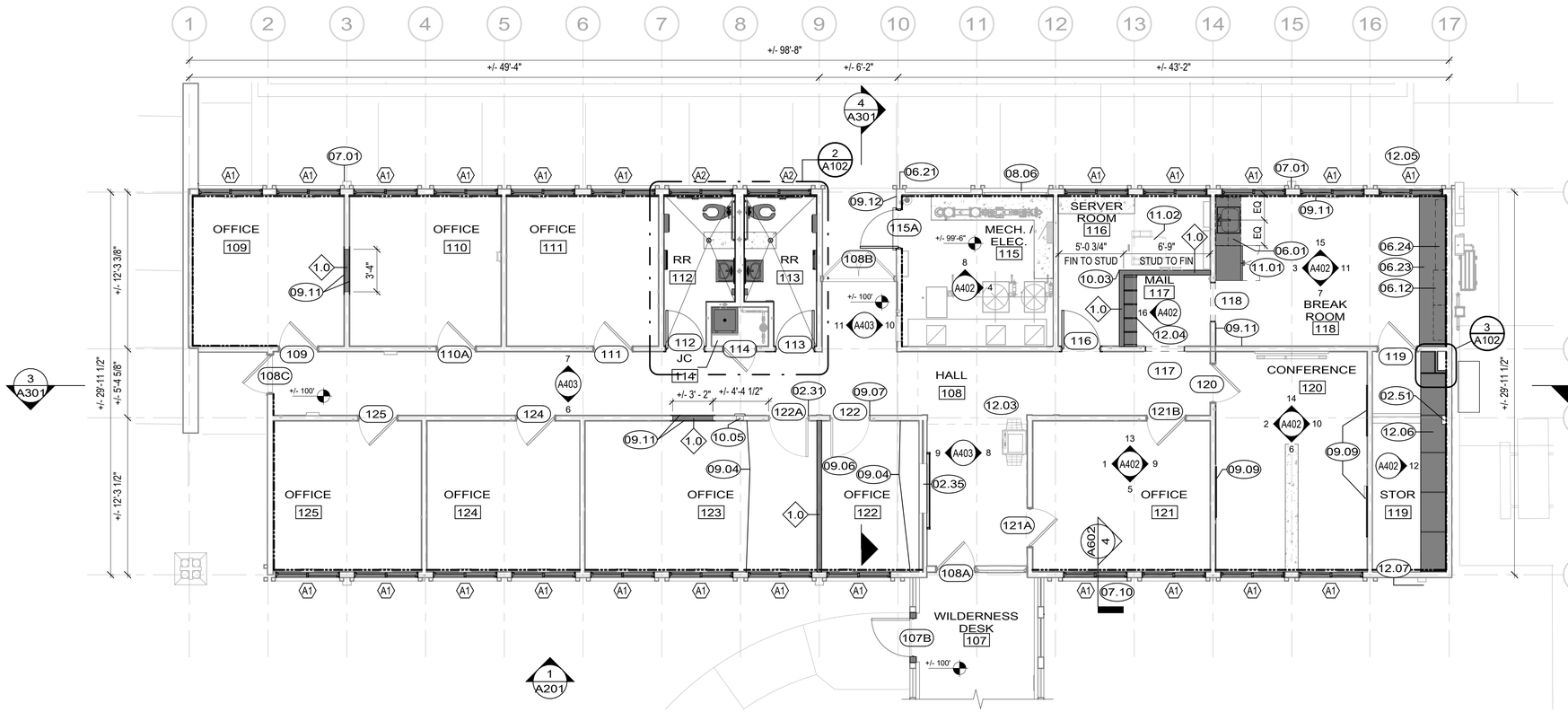

1 A102 ENLARGED PLAN - ADMIN
SCALE A

LEGEND

- INTERIOR FACE OF EXTERIOR WALL: REFER TO WALL ASSEMBLY ON SHEET G005. SEAL ALL <E> PENETRATIONS AND GAPS IN EXTERIOR SHEATHING (FROM INSIDE WALL CAVITY). INSTALL <N> INSULATION AND GWB WALL FINISH FROM FLOOR TO STRUCTURE ABOVE. REINSTALL SALVAGED WD TRIM AND WD FURRING. RE: FINISH SCHEDULE.
- <E> ELEMENT TO REMAIN
- <N> CONSTRUCTION, RE: G005 FOR WALL ASSEMBLIES
- PATCH CONCRETE AFTER PLUMBING, MECHANICAL OR ELECTRICAL INSTALLATION, RE: PLUMB, MECH, OR ELEC. PROVIDE SMOOTH FINISH W/ <E> ADJACENT CONCRETE - RE: FINISH SCHEDULE
- 8 <N> WINDOW, RE: A510, WINDOW SCHEDULE
- <N> DOOR, RE: A501, DOOR SCHEDULE
- <E> SALVAGED DOOR REINSTALLED, RE: DOOR SCHEDULE
- <E> DOOR TO REMAIN, RE: A501, DOOR SCHEDULE

GENERAL NOTES

1. ADMIN WING/VISITOR CENTER FINISHED FLOOR ELEVATION: +/- 100'-0" = USGS 8726.5'. COMFORT STATION FINISHED FLOOR ELEVATION: +/- 99'-3 5/8" = USGS 8725.8'. RE: CIVIL
2. CONTRACTOR SHALL BE RESPONSIBLE FOR PROTECTING ALL ELEMENTS/MATERIALS TO REMAIN.
3. ALL EXISTING ELEMENTS ARE SHOWN BASED ON AVAILABLE INFORMATION, NON-DESTRUCTIVE FIELD OBSERVATION AND PREVIOUS DRAWINGS PROVIDED BY GOVERNMENT. CONTRACTOR TO FIELD VERIFY ALL EXISTING CONSTRUCTION AND NOTIFY ARCHITECT/C.O. OF ANY DISCREPANCY BETWEEN CONTRACT DOCUMENTS AND ACTUAL FIELD CONDITIONS AND REQUEST CLARIFICATION PRIOR TO PROCEEDING WITH CONSTRUCTION.
4. REFER TO CIVIL, STRUCTURAL, MECHANICAL, PLUMBING, ELECTRICAL, TECHNOLOGY, FIRE PROTECTION, AND FIRE ALARM DRAWINGS FOR ADDITIONAL SCOPE.
5. ALL CONSTRUCTION ACTIVITIES SHALL BE EXECUTED IN A MANNER WHICH PROTECTS ALL UNDERLYING HISTORIC MATERIALS.
6. ALL WORK TO COMPLY WITH SECRETARY OF INTERIOR STANDARD FOR REHABILITATION.
7. REFER TO SHEET G005 FOR WALL TYPES.
8. REFER TO WINDOW AND DOOR SCHEDULE FOR SCOPE OF <N> AND REHABILITATION WORK.
9. ALL EXTERIOR WOOD ELEMENTS TO REMAIN SHALL BE PREPARED AND REFINISHED.
10. REFER TO FINISH PLAN AND SCHEDULE FOR ADDITIONAL INFORMATION.
11. VERIFY DIMENSIONS OF ALL EXISTING CONSTRUCTION IN FIELD. EXPECT THAT EXISTING BUILDING ELEMENTS MAY NOT BE PLUMB, LEVEL OR SQUARE.
12. PATCH AND REPAIR ALL FINISHES IMPACTED BY NEW WORK TO MATCH ADJACENT IN MATERIAL, COLOR, TEXTURE AND FINISH. TRANSITION <N> FINISHES TO BLEND AND APPEAR SEAMLESS. PROVIDE SAMPLES TO C.O. FOR APPROVAL.
13. PATCH ALL MISCELLANEOUS HOLES, TO MATCH ADJACENT, UON.
14. PAINT ALL EXPOSED CONDUIT TO MATCH ADJACENT FINISH WITH DIRECT TO METAL PAINT.
15. NEW PATHS AND SITE ELEMENTS ARE SHOWN FOR REFERENCE ONLY, RE: CIVIL FOR SITE ELEMENTS AND ABAAS ROUTES.
16. PROVIDE <N> DOUBLE CELL CELLULAR WINDOW SHADES AT A1 WINDOWS. RE: WINDOW SCHEDULE.

KEYNOTES

02.31	<E> WD DOOR TRIM TO REMAIN. PROTECT IN PLACE. MODIFY AS REQUIRED FOR DOOR MODIFICATIONS.
02.35	<E> FIREHOSE CABINET TO REMAIN. PROTECT IN PLACE. REMOVE ANY WAYFINDING SIGNAGE RELATED TO THIS HOSE CABINET.
02.51	<E> COLUMN TO REMAIN.
06.01	PROVIDE <N> WD BASE CABINETS WITH FINISH END PANEL AND SOLID SURFACE COUNTERTOP WITH 4 INCH INTEGRAL BACKSPLASH AND STAINLESS STEEL SINK, RE: PLUMB
06.12	PROVIDE <N> WALL CABINETS - 24" DEEP OVER REFRIGERATOR, 12" DEEP AT OVER COUNTER. FINISH BOTH SIDES AND END PANELS OF CABINETS
06.21	PATCH WD TRIM AND EAVE WHERE DOWNSPOUT IS REMOVED. PT TO MATCH <E> ADJACENT MATERIAL
06.23	PROVIDE <N> WD BASE CABINETS AND SOLID SURFACE COUNTERTOP WITH 4 INCH INTEGRAL BACKSPLASH
06.24	PROVIDE <N> WD VENEER FLOATING SHELVES MOUNTED ON HEAVY DUTY HIDDEN BRACKETS
07.01	<E> DOWNSPOUTS TO CONNECT TO <N> UNDERGROUND BOOT, RE: CIVIL
07.10	INSTALL <N> WALL INFILL AT REMOVED DOOR. <N> 2X4 FRAMING, SHEATHING, INSULATION, PTD GWB, AND PTD EXTERIOR FINISH MATERIAL TO MATCH <E> IN KIND, RE: G005 FOR WALL TYPE 2.1.
08.06	BLOCK OFF <E> MECH VENT AT INTERIOR. PROVIDE <N> MINERAL WOOL INSULATION WITHIN OPENING AND <N> GWB FINISH
09.04	PATCH FINISHES WHERE WALL OR CASEWORK WAS REMOVED. PROVIDE SMOOTH TRANSITION BETWEEN <E> AND <N> WALL FINISHES.
09.06	INSTALL SALVAGED WD WALL BASE TRIM FROM OTHER LOCATION.
09.07	INSTALL SALVAGED WD DOOR TRIM FROM OTHER LOCATION
09.09	<N> SURFACE MOUNTED ACOUSTIC PIN BOARD 48" X 48"
09.11	INSTALL <N> WD WALL BASE TRIM TO MATCH <E>
09.12	PROVIDE WALL PATCH FOR T1-11 FINISH WHERE WATER METER REMOVED, MATCH ADJACENT
10.03	<N> METAL CORNER GUARD
10.04	INSTALL <N> SEMI RECESSED WASTE RECEPTACLE AND PAPER TOWEL DISPENSER, PROVIDE IN WALL WD BLOCKING.
10.05	<N> SEMI-RECESSED FIRE EXTINGUISHER CABINET
10.07	<N> GRAB BARS. (1) 36" REAR, (1) 42" SIDE, AND (1) 18" VERTICAL. PROVIDE IN-WALL WD BLOCKING.
10.09	<N> ABAAS COMPLIANT LIQUID SOAP DISPENSER.
10.11	<N> ABAAS COMPLIANT COAT HOOK ON INSIDE FACE OF DOOR AT 48" AFF.
11.01	<N> FULL-SIZED REFRIGERATOR PROVIDED BY PARK, INSTALLED BY GC, MAX 33" WIDTH AND 70" HEIGHT.
11.02	SERVER RACKS TO BE PROVIDED AND INSTALLED BY PARK, NIC. RE: TECH FOR REQUIRED CONDUIT RUNS.
12.03	<E> COPY MACHINE PROVIDED AND INSTALLED BY PARK, NIC.
12.04	PROVIDE <N> CUSTOM WD CASEWORK FOR MAILBOXES, PACKAGE ORGANIZATION, AND GENERAL STORAGE FULL HEIGHT
12.05	PROVIDE <N> STORAGE CABINETS WITH ADJUSTABLE WD SHELVING, EACH APPROX 2' DEEP AND 8' TALL BY 1'-6" WIDE. ACCOMMODATE WALL GRILL IN TOE KICK, RE: MECH AND A610
12.06	INSTALL FLOOR-TO-CEILING WD BUILT-IN 2' DEEP WITH ADJUSTABLE WD SHELVING
12.07	INSTALL FLOOR-TO-CEILING WD BUILT-IN 14" DEEP WITH ADJUSTABLE WD SHELVING
12.14	INSTALL <N> SERVICE SINK, RE: PLUMBING FOR ADDITIONAL INFORMATION, INSTALL <N> FRP PANEL FROM FLOOR TO CEILING ABOVE. PROVIDE <N> BUILT-IN WD SHELVING ON NORTH AND WEST WALLS ABOVE SERVICE SINK TO MATCH <E> CONFIGURATION. BOTTOM SHELF TO BE MOUNTED AT 3'-0" AFF.
22.03	RE: PLUMBING AND FIRE PROTECTION FOR ADDITIONAL INFORMATION AT <N> PIPING THIS AREA.
22.04	<N> FLOOR DRAIN, RE: PLUMB
23.02	<N> METAL FLOOR REGISTER, RE: MECH.
23.06	<N> PVC CONDUIT, RE: MECH
26.01	<N> POWER ASSISTED DOOR BUTTON LOCATION, FLUSH MOUNTED. INSTALL PER ABAAS, RE: ELEC.
26.08	<N> CONDUIT, RE: ELEC

SCALE: C 1 0 1 2 3 SCALE OF FEET
SCALE: B 2 0 3 6 SCALE OF FEET
SCALE: A 4 0 4 8 12 SCALE OF FEET
TRUE PLAN

STATE OF COLORADO
1-16-2026
ELIZABETH McCLURE HALLAS
203482
LICENSED ARCHITECT

KEY PLAN

AE FIRM
PRIME:
OTAK, INC.
REDMOND, WA

SUBCONTRACTOR:
ANDERSON HALLAS ARCHITECTS
GOLDEN, CO

DESIGNED: CR / VC
DRAWN: VC / MS / DM
TECH REVIEW: CR / EMH
DATE: 01/16/2026

SUB SHEET NO. A102

TITLE OF SHEET
ENLARGED PLAN - ADMIN

REHABILITATE KAWUNEECHE VISITOR CENTER
ROCKY MOUNTAIN NATIONAL PARK

DRAWING NO. 121 165639
PMIS/PKG NO. 326235
SHEET 64 OF 177

1/20/2026 10:33:53 AM Autodesk Docs://2024-260 NPS ROMO Kawuneeche VC DD-CA wOtak/2024260 NPS ROMO KAWUNEECHE VISITOR CENTER_BIM360.rvt

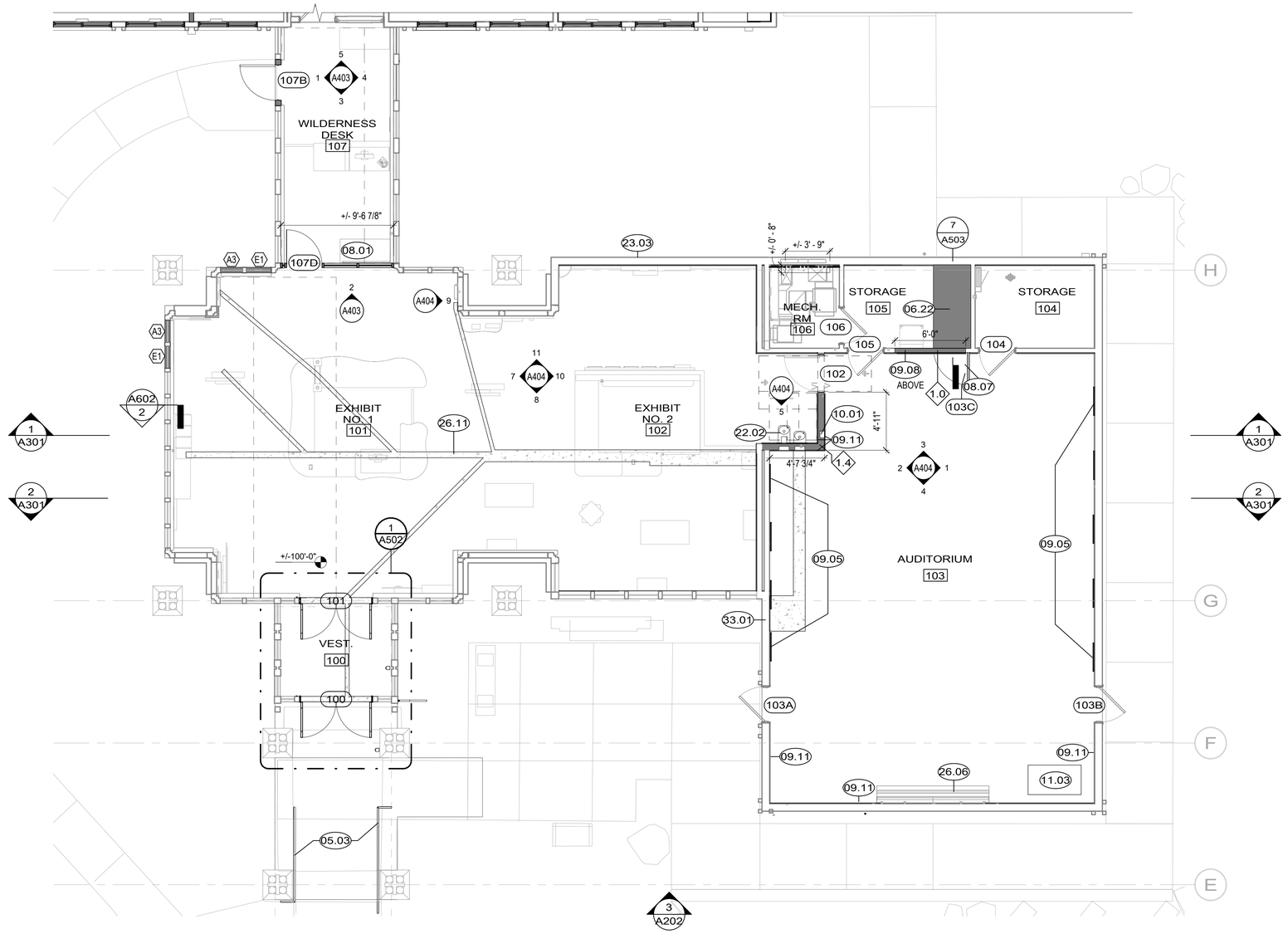

1 A103 ENLARGED PLAN - AUDITORIUM & EXHIBIT
SCALE (A)

GENERAL NOTES

1. ADMIN WING/VISITOR CENTER FINISHED FLOOR ELEVATION: +/- 100'-0" = USGS 8726.5'. COMFORT STATION FINISHED FLOOR ELEVATION: +/- 99'-3 5/8" = USGS 8725.8'. RE: CIVIL
2. CONTRACTOR SHALL BE RESPONSIBLE FOR PROTECTING ALL ELEMENTS/MATERIALS TO REMAIN.
3. ALL EXISTING ELEMENTS ARE SHOWN BASED ON AVAILABLE INFORMATION, NON-DESTRUCTIVE FIELD OBSERVATION AND PREVIOUS DRAWINGS PROVIDED BY GOVERNMENT. CONTRACTOR TO FIELD VERIFY ALL EXISTING CONSTRUCTION AND NOTIFY ARCHITECT/C.O. OF ANY DISCREPANCY BETWEEN CONTRACT DOCUMENTS AND ACTUAL FIELD CONDITIONS AND REQUEST CLARIFICATION PRIOR TO PROCEEDING WITH CONSTRUCTION.
4. REFER TO CIVIL, STRUCTURAL, MECHANICAL, PLUMBING, ELECTRICAL, TECHNOLOGY, FIRE PROTECTION, AND FIRE ALARM DRAWINGS FOR ADDITIONAL SCOPE.
5. ALL CONSTRUCTION ACTIVITIES SHALL BE EXECUTED IN A MANNER WHICH PROTECTS ALL UNDERLYING HISTORIC MATERIALS.
6. ALL WORK TO COMPLY WITH SECRETARY OF INTERIOR STANDARD FOR REHABILITATION.
7. REFER TO SHEET G005 FOR WALL TYPES.
8. REFER TO WINDOW AND DOOR SCHEDULE FOR SCOPE OF <N> AND REHABILITATION WORK.
9. ALL EXTERIOR WOOD ELEMENTS TO REMAIN SHALL BE PREPARED AND REFINISHED.
10. REFER TO FINISH PLAN AND SCHEDULE FOR ADDITIONAL INFORMATION.
11. VERIFY DIMENSIONS OF ALL EXISTING CONSTRUCTION IN FIELD. EXPECT THAT EXISTING BUILDING ELEMENTS MAY NOT BE PLUMB, LEVEL OR SQUARE.
12. PATCH AND REPAIR ALL FINISHES IMPACTED BY NEW WORK TO MATCH ADJACENT IN MATERIAL, COLOR, TEXTURE AND FINISH. TRANSITION <N> FINISHES TO BLEND AND APPEAR SEAMLESS. PROVIDE SAMPLES TO C.O. FOR APPROVAL.
13. PATCH ALL MISCELLANEOUS HOLES, TO MATCH ADJACENT, UON.
14. PAINT ALL EXPOSED CONDUIT TO MATCH ADJACENT FINISH WITH DIRECT TO METAL PAINT.
15. NEW PATHS AND SITE ELEMENTS ARE SHOWN FOR REFERENCE ONLY, RE: CIVIL FOR SITE ELEMENTS AND ABAAS ROUTES.
16. PROVIDE <N> DOUBLE CELL CELLULAR WINDOW SHADES AT A1 WINDOWS. RE: WINDOW SCHEDULE.

KEYNOTES

05.03	<N> STEEL HANDRAIL, RE: CIVIL.
06.22	PROVIDE WD TABLE STORAGE CABINET, CONSTRUCTED OF 2X WOOD FRAMING AND PLYWOOD, PROVIDE WD BLOCKING SLOTS AT INTERIOR TO HOLD TABLES, PAINT. RE: A503
08.01	<N> WD GLASS PARTITION, HOLD 6" FROM CEILING FOR AIR CIRCULATION RE: MECH
08.07	PROVIDE <N> 36"X46" WD ACCESS PANEL DOOR FOR BUILT-IN TABLE STORAGE
09.05	<N> SURFACE MOUNTED ACOUSTIC WALL PANELS, (11) VERTICAL PANELS APPROX 6'-8" X 2'-6" AND (3) HORIZONTAL PANELS APPROX 6'-2" X 2'-10". RE: A404 FOR APPROX LOCATIONS AND CONFIGURATION. CONFIRM MOUNTING LOCATIONS WITH C.O.
09.08	PROVIDE PATCH AT REMOVED WINDOW OPENING WITH FINISH TO MATCH <E> ADJACENT WALL FINISH. PROVIDE SMOOTH TRANSITION BETWEEN <E> AND <N> WALL FINISHES.
09.11	INSTALL <N> WD WALL BASE TRIM TO MATCH <E>
10.01	<N> FULLY-RECESSED FIRE EXTINGUISHER CABINET
11.03	<N> EXPANDING HEIGHT PODIUM, PROVIDED & INSTALLED BY GOVERNMENT
22.02	<N> BI-LEVEL ABAAS DRINKING FOUNTAIN WITH INTEGRAL BOTTLE FILLER AND CANE DETECTION APRON, RE: PLUMB
23.03	CONDENSATE DISCHARGE. RE: MECH.
26.06	<N> WALL MOUNTED PROJECTOR SCREEN, RE: TECH. PROVIDE EXTRA BLOCKING IN WALL
26.11	UNDERSLAB CONDUIT TO BE FIELD COORDINATED WITH <E> UNDERSLAB DUCTWORK TO REMAIN, RE: ELEC, TECH, & MECH.
33.01	UTILITY ENTRANCE, RE: CIVIL

LEGEND

- INTERIOR FACE OF EXTERIOR WALL: INSTALL MINERAL WOOL BOARD INSULATION FROM FLOOR TO STRUCTURE ABOVE WITHIN EXISTING WALL CAVITIES WITH SMART VAPOR RETARDER AT INTERIOR. SEAL ALL <E> PENETRATIONS AND GAPS (FROM INSIDE WALL CAVITY). INSTALL <N> GWB FINISH FROM FLOOR TO STRUCTURE ABOVE. REINSTALL SALVAGED WD TRIM. RE: FINISH SCHEDULE FOR ADDITIONAL INFORMATION.
- <E> ELEMENT TO REMAIN
- <N> CONSTRUCTION, RE: G005 ASSEMBLIES
- PATCH CONCRETE AFTER PLUMBING OR ELECTRICAL INSTALLATION, RE: STRUCT, PLUMB, MECH, & ELEC. PROVIDE SMOOTH FINISH W/ <E> ADJACENT CONCRETE - RE: FINISH SCHEDULE
- <N> DOOR, RE: A501, DOOR SCHEDULE
- <E> SALVAGED DOOR REINSTALLED, RE: DOOR SCHEDULE
- <E> DOOR TO REMAIN, RE: A501, DOOR SCHEDULE

SCALE: (A) 4 0 4 8 12 SCALE OF FEET — TRUE — PLAN

STATE OF COLORADO — 1/16/2026 — ELIZABETH McCLURE HALLAS 203482 — LICENSED ARCHITECT

KEY PLAN

AE FIRM
PRIME: OTAK, INC. REDMOND, WA
SUBCONTRACTOR: ANDERSON HALLAS ARCHITECTS GOLDEN, CO

DESIGNED: CR / VC
DRAWN: VC / MS / DM
TECH REVIEW: CR / EMH
DATE: 01/16/2026

SUB SHEET NO. A103

TITLE OF SHEET
ENLARGED PLAN - AUDITORIUM & EXHIBIT
REHABILITATE KAWUNEECHE VISITOR CENTER
ROCKY MOUNTAIN NATIONAL PARK

DRAWING NO. 121 165639
PMIS/PKG NO. 326235
SHEET 65 OF 177

1/20/2026 10:33:54 AM Autodesk Docs://2024-260 NPS ROMO Kawuneeche VC DD-CA wOtak/2024260 NPS ROMO KAWUNEECHE VISITOR CENTER_BIM360.rvt

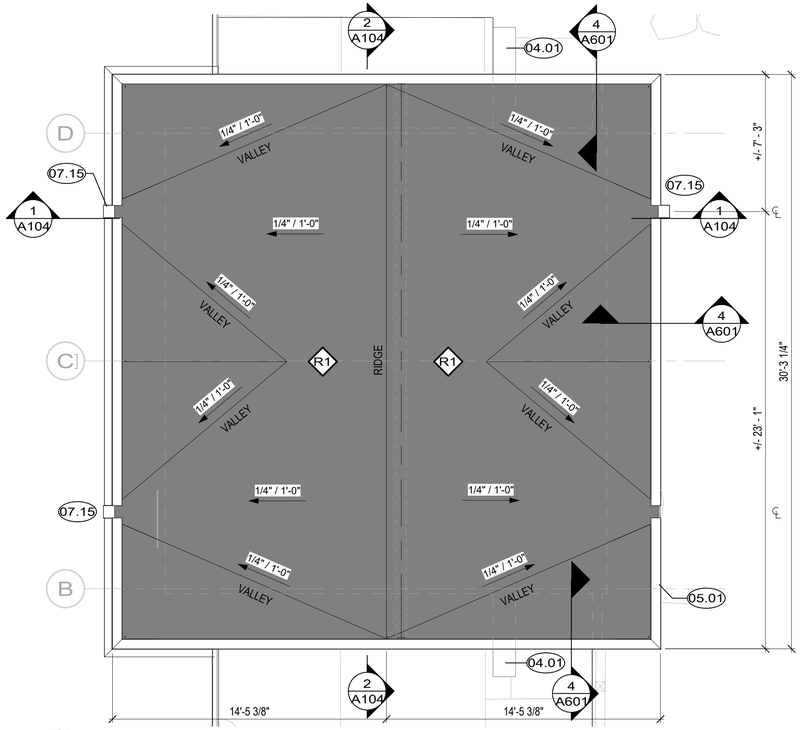

4 A104 ENLARGED ROOF PLAN - COMFORT STATION
SCALE A

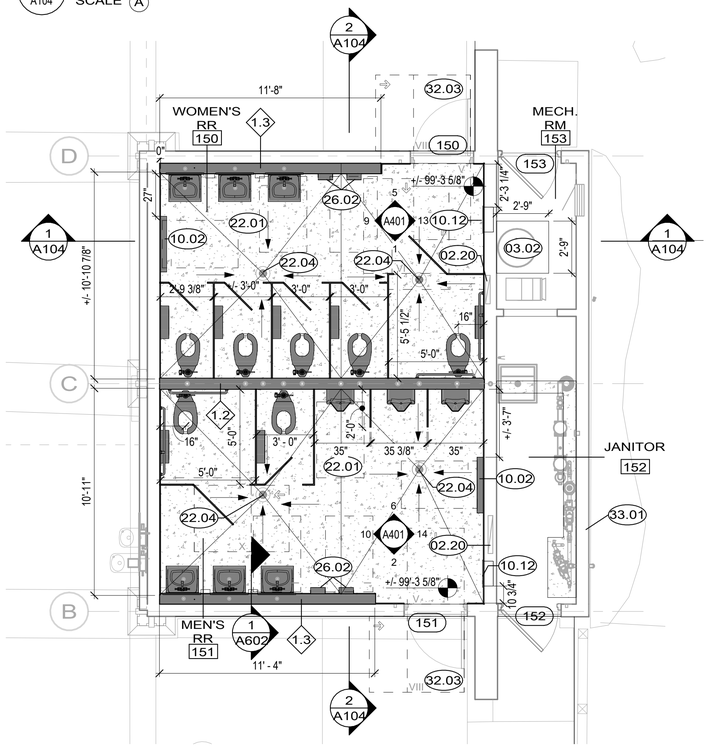

3 A104 ENLARGED PLAN - COMFORT STATION
SCALE A

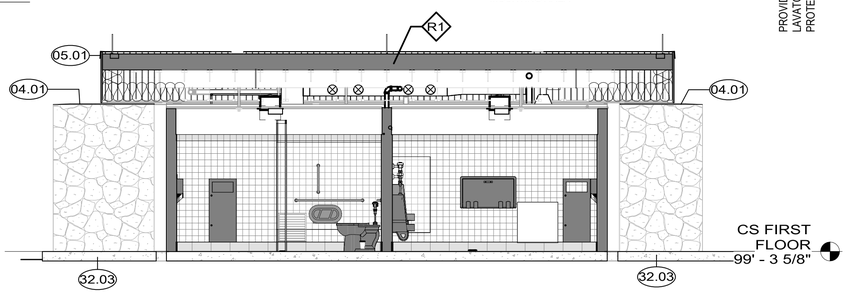

2 A104 BUILDING SECTION - COMFORT STATION
SCALE A

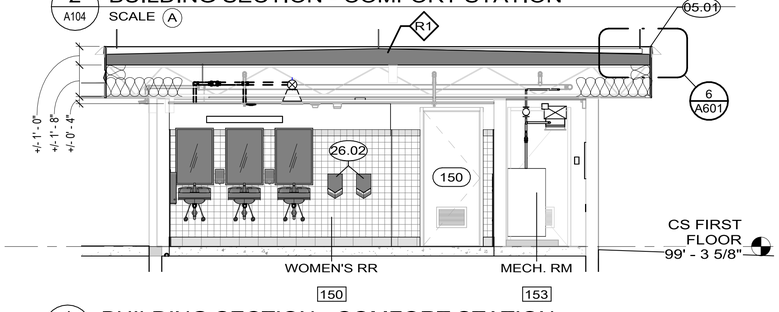

1 A104 BUILDING SECTION - COMFORT STATION
SCALE A

KNEE AND TOE CLEARANCE

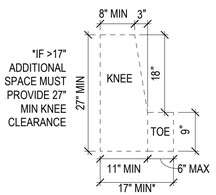

DOUBLE LARGE ROLL TOILET TISSUE DISPENSER

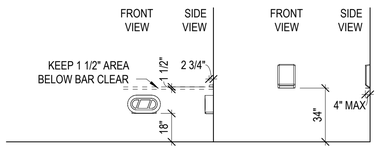

SURFACE MOUNT HAND DRYER

HORIZONTAL BABY CHANGING TABLE | URINAL | SOAP DISPENSER | ACCESSIBLE WALL MOUNTED RECEPTACLE | ACCESSIBLE WALL GRAB BARS

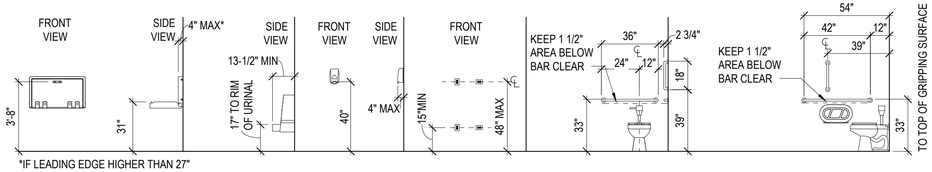

RECESSED WASTE RECEPTACLE | PROTRUDING DISPENSER BELOW GRAB BAR | ACCESSIBLE WALL MOUNTED LAVATORY | ACCESSIBLE WATER CLOSET

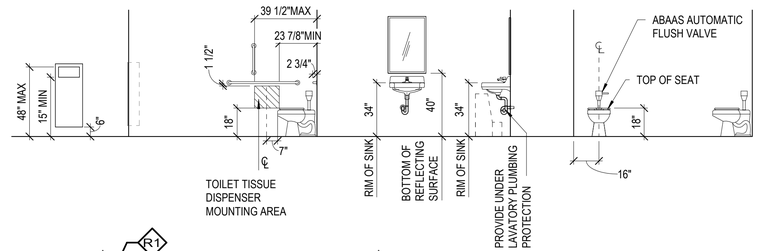

GENERAL NOTES

1. ADMIN WING/VISITOR CENTER FINISHED FLOOR ELEVATION: 100'-0" = USGS 8726.5'. COMFORT STATION FINISHED FLOOR ELEVATION: 99'-3 5/8" = USGS 8725.8'. RE: CIVIL
2. CONTRACTOR SHALL BE RESPONSIBLE FOR PROTECTING ALL ELEMENTS/MATERIALS TO REMAIN.
3. ALL EXISTING ELEMENTS ARE SHOWN BASED ON AVAILABLE INFORMATION, NON-DESTRUCTIVE FIELD OBSERVATION AND PREVIOUS DRAWINGS PROVIDED BY GOVERNMENT. CONTRACTOR TO FIELD VERIFY ALL EXISTING CONSTRUCTION AND NOTIFY ARCHITECT/C.O. OF ANY DISCREPANCY BETWEEN CONTRACT DOCUMENTS AND ACTUAL FIELD CONDITIONS AND REQUEST CLARIFICATION PRIOR TO PROCEEDING WITH CONSTRUCTION.
4. REFER TO CIVIL, STRUCTURAL, MECHANICAL, PLUMBING, ELECTRICAL, TECHNOLOGY, FIRE PROTECTION, AND FIRE ALARM DRAWINGS FOR ADDITIONAL SCOPE.
5. ALL CONSTRUCTION ACTIVITIES SHALL BE EXECUTED IN A MANNER WHICH PROTECTS ALL UNDERLYING HISTORIC MATERIALS.
6. ALL WORK TO COMPLY WITH SECRETARY OF INTERIOR STANDARDS FOR REHABILITATION.
7. REFER TO SHEET G005 FOR WALL TYPES.
8. REFER TO A401 FOR TOILET ACCESSORIES.
9. REFER TO DOOR SCHEDULE FOR SCOPE OF <N> AND REHABILITATION WORK.
10. ALL EXTERIOR FASCIAS, SOFFITS, COLUMNS, BEAMS TO REMAIN SHALL BE PREPARED AND REFINISHED.
11. REFER TO INTERIOR ELEVATIONS FOR ADDITIONAL INFORMATION.
12. VERIFY DIMENSIONS OF ALL EXISTING CONSTRUCTION IN FIELD. EXPECT THAT EXISTING BUILDING ELEMENTS MAY NOT BE PLUMB, LEVEL OR SQUARE.
13. PATCH AND REPAIR ALL FINISHES IMPACTED BY NEW WORK TO MATCH ADJACENT IN MATERIAL, COLOR, TEXTURE AND FINISH. TRANSITION <N> FINISHES TO BLEND AND APPEAR SEAMLESS. PROVIDE SAMPLES TO C.O. FOR APPROVAL.
14. PATCH ALL MISCELLANEOUS HOLES, TO MATCH ADJACENT, UON.
15. PAINT ALL EXPOSED CONDUIT TO MATCH ADJACENT FINISH WITH DIRECT TO METAL PAINT.
16. ALL EXTERIOR WOOD ELEMENTS (WINDOWS, BEAMS, SOFFITS, FASCIAS, COLUMNS, ETC.) SHALL BE PREPARED AND REPAINTED.
17. GENTLY CLEAN ALL <E> MASONRY.
18. <N> RESTROOM PARTITIONS TO BE HDPE, PEDESTAL MOUNTED. REFER TO SPECIFICATIONS FOR ADDITIONAL INFORMATION.

KEYNOTES

02.20	<E> VENT TO REMAIN, PROTECT IN PLACE, RE: MECH.
03.02	<N> CONCRETE HOUSEKEEPING PAD. ROUGHEN SURFACE OF <E> SLAB TO AN AMPLITUDE OF 1/2". APPLY BONDING AGENT. PROVIDE <N> 33 "X 33" BY 6" THICK HOUSEKEEPING PAD REINFORCED WITH #3 BARS AT 18" EACH WAY CENTERED IN THE PAD. RE: PLUMB
04.01	PROVIDE <N> CONCRETE PARGE CAP AT TOP OF EXISTING STONE WALL, SLOPE TOP TO DRAIN AWAY FROM BUILDING.
05.01	INSTALL <N> 4" MIN. PRE-FINISHED METAL ROOF EDGE AT PERIMETER.
07.15	<N> PREFINISHED METAL SCUPPER. COLOR TO MATCH PARAPET FLASHING.
10.02	<N> WALL MOUNTED BABY CHANGING STATION
10.12	<N> ABAAS COMPLIANT RECESSED WASTE RECEPTACLE, PROVIDE IN WALL BLOCKING.
22.01	PROVIDE <N> PLUMBING FIXTURES AND ACCESSORIES, RE: PLUMB
22.04	<N> FLOOR DRAIN, RE: PLUMB
26.02	<N> ELECTRIC AUTOMATIC HAND DRYER, RE: ELEC.
32.03	<N> CONCRETE, RE: CIVIL AND STRUC
33.01	UTILITY ENTRANCE, RE: CIVIL

LEGEND

- <E> WALL TO REMAIN
- <N> CONSTRUCTION, RE: G005 FOR ASSEMBLIES.
- <N> CONCRETE, RE: STRUCTURAL. PREPARE FOR <N> TILE FINISH
- <N> DOOR, RE: A501, DOOR SCHEDULE
- <E> SALVAGED DOOR REINSTALLED, RE: DOOR SCHEDULE
- <E> DOOR TO REMAIN, RE: A501, DOOR SCHEDULE

SCALE: A 4 0 4 8 SCALE OF FEET

TRUE PLAN

STATE OF COLORADO
1-16-2026
ELIZABETH McCLURE HALLAS
203482
LICENSED ARCHITECT

KEY PLAN

AE FIRM
PRIME:
OTAK, INC.
REDMOND, WA

SUBCONTRACTOR:
ANDERSON HALLAS ARCHITECTS
GOLDEN, CO

DESIGNED: CR / VC
DRAWN: VC / MS / DM
TECH REVIEW: CR / EMH
DATE: 01/16/2026

SUB SHEET NO. A104

TITLE OF SHEET
ENLARGED PLAN - COMFORT STATION

REHABILITATE KAWUNEECHE VISITOR CENTER
ROCKY MOUNTAIN NATIONAL PARK

DRAWING NO. 121 165639
PMIS/PKG NO. 326235
SHEET 66 OF 177

1/23/2026 9:19:08 AM Autodesk Docs://2024-260 NPS ROMO Kawuneeche VC DD-CA wOtak/2024260 NPS ROMO KAWUNEECHE VISITOR CENTER_BIM360.rvt

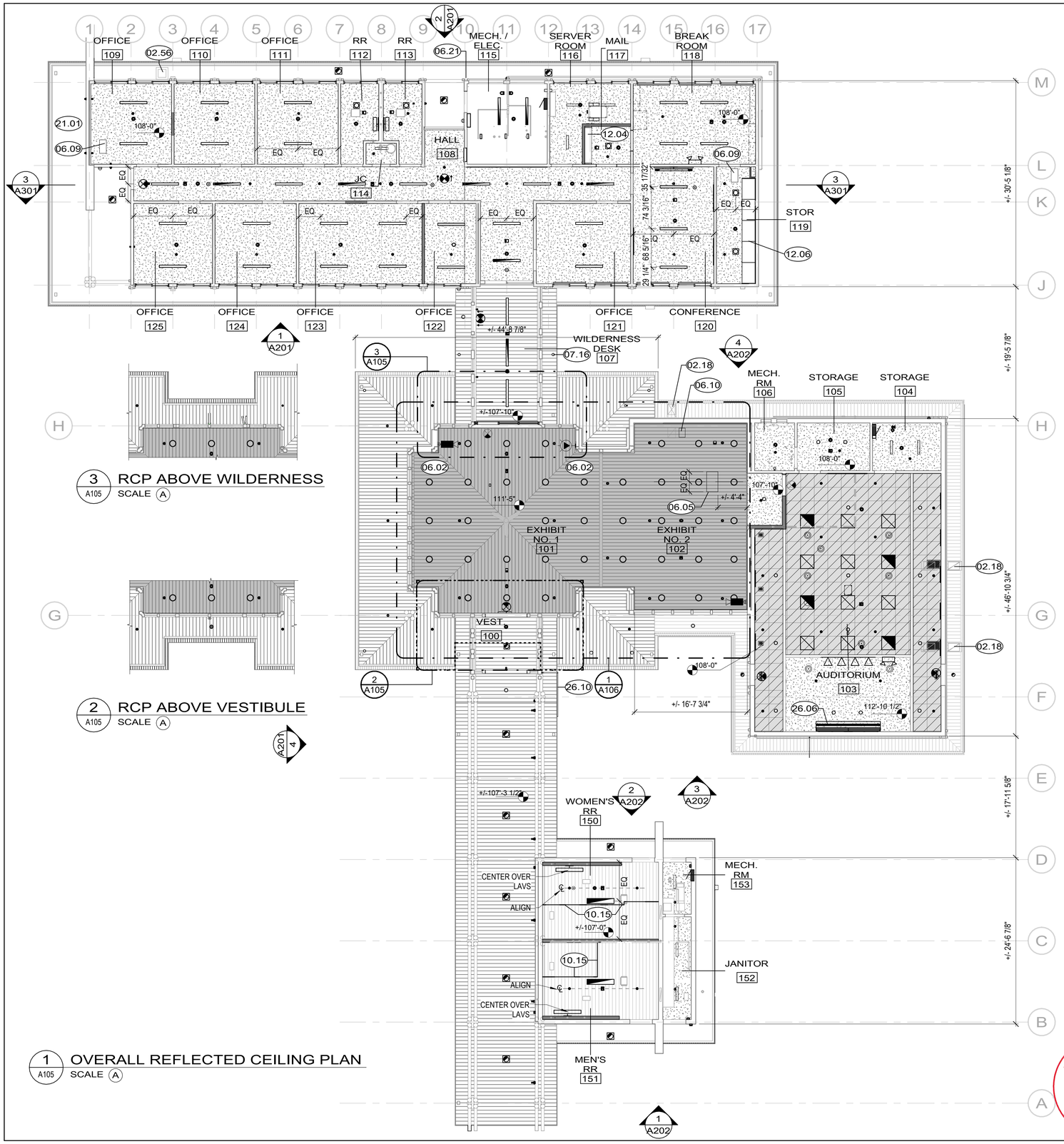

3 A105 RCP ABOVE WILDERNESS
SCALE A

2 A105 RCP ABOVE VESTIBULE
SCALE A

1 A105 OVERALL REFLECTED CEILING PLAN
SCALE A

GENERAL NOTES

1. REFER TO SHEET G005 FOR CEILING TYPES.
2. PAINT ALL EXPOSED CONDUIT TO MATCH ADJACENT FINISH.
3. ALL FIRE SUPPRESSION PIPING CONCEALED WITHIN ATTIC TO BE BLACK STEEL.
4. COORDINATE WITH STRUCTURAL, MECHANICAL, PLUMBING, ELECTRICAL, TECHNOLOGY, FIRE SUPPRESSION, AND FIRE ALARM DRAWINGS FOR LOCATIONS OF CEILING FIXTURES. GC TO PROVIDE CONSOLIDATED SHOP DRAWINGS OF ALL SYSTEMS, AND PROVIDE REQUIRED MOCK UPS AND SAMPLES. GC TO MINIMIZE NUMBER AND SIZES OF PENETRATIONS IN HISTORIC WOOD CEILING AND ALIGN PENETRATIONS.
5. ALL INTERIOR AND EXTERIOR WOOD ELEMENTS (WINDOWS, BEAMS, SOFFITS, FASCIAS, COLUMNS, TRIM, SIDING, ETC.) SHALL BE PREPARED AND REFINISHED.
6. AT <E> WOOD BOARD CEILINGS, CENTER FIXTURES, SPRINKLER HEADS, AND EQUIPMENT ON BOARDS UNO AND ALIGN ACROSS THE ROOM. COORDINATE ALL LOCATIONS IN THE FIELD.
7. AT TILE <N> CEILINGS, CENTER FIXTURES, SPRINKLER HEADS, AND EQUIPMENT IN CEILING TILES, IN HALF TILES, OR IN SOFFITS AS SHOWN, UNO. COORDINATE ALL LOCATIONS IN THE FIELD.
8. CEILING GRID TO BE CENTERED WITHIN SPACE AND AVOID TILES LESS THAN 12" IN EITHER DIRECTION.
9. AT <N> GWB CEILINGS, CENTER FIXTURES, SPRINKLER HEADS, AND EQUIPMENT WITH EACH OTHER IN EACH SPACE. COORDINATE ALL LOCATIONS IN THE FIELD.
10. HANGING EXHIBIT SIGNAGE (BY OTHERS) IN <E> WOOD BOARD CEILINGS SHALL BE COORDINATED SO THAT CABLES RUN WITHIN THE EXISTING 1/2" GAP AND DO NOT IMPACT THE HISTORIC BOARD CEILING FINISH.

KEYNOTES

02.18	<E> MECH SOFFIT VENT, RE: MECH. PAINT TO BLEND WITH SURROUNDING WOOD SOFFIT.
02.56	<E> SOFFIT ACCESS PANEL TO REMAIN. PAINT TO BLEND WITH SURROUNDING WOOD SOFFIT
06.02	PROVIDE IN-KIND REPAIRS AS NEEDED TO REPAIR CONCEALED WD CORNER MULLION. FINISH TO MATCH <E>
06.05	PROVIDE <N> 20"x36" ATTIC ACCESS PANEL IN <E> CEILING, CLAD PANEL WITH 1x6 WOOD PLANKS TO MATCH <E> CEILING FINISH. COORDINATE LOCATION IN CEILING WITH <E> ROOF FRAMING ABOVE. RE: DETAIL 4/A106
06.09	PROVIDE <N> 12"x24"ATTIC ACCESS PANEL. COORDINATE LOCATION IN CEILING WITH <E> ROOF FRAMING ABOVE.
06.10	REINSTALL SALVAGED ATTIC ACCESS PANEL 1X6 BOARDS. REFINISH TO MATCH ADJACENT.
06.21	PATCH WD TRIM AND EAVE WHERE DOWNSPOUT IS REMOVED. PT TO MATCH <E> ADJACENT MATERIAL
07.16	PROVIDE <N> ESCUTCHEON AT ROOF DRAIN PENETRATION. PAINT TO MATCH ADJACENT
10.15	<N> OVERHEAD BRACING FOR TOILET PARTITIONS
12.04	PROVIDE <N> CUSTOM WD CASEWORK FOR MAILBOXES, PACKAGE ORGANIZATION, AND GENERAL STORAGE FULL HEIGHT
12.06	INSTALL FLOOR-TO-CEILING WD BUILT-IN 2' DEEP WITH ADJUSTABLE WD SHELVING
21.01	SIDEWALL SPRINKLER, RE: FIRE PROTECTION
26.06	<N> WALL MOUNTED PROJECTOR SCREEN, RE: TECH. PROVIDE EXTRA BLOCKING IN WALL
26.10	<N> LIGHTNING PROTECTION SYSTEM DOWNLEAD, RE: A603 AND ELEC

LEGEND

- <E> WALL OR CEILING TO REMAIN
- <N> WALL, RE: G005, WALL TYPES
- <N> GWB CEILING
- <E> 6" BOARD CEILING OR EXTERIOR SOFFIT, PREPARE AND REFINISH
- REINSTALL AND REFINISH 1X6 BOARD CEILING WITH 1/2" SPACE BETWEEN. SURFACE ATTACHED TO <N> PLYWOOD SUBSTRATE TO MATCH <E> ATTACHMENT SIZE, FINISH CADENCE AND PATTERN. ASSUME 5% <N> REPLACEMENT BOARDS TO MATCH <E> IN SPECIES, GRADE, SIZE, AND FINISH
- INSTALL <N> CEILING TILE WITHIN <N> HUNG TRACK SYSTEM. COORDINATE WITH MECH, ELEC, TECH, AND FIRE PROTECTION

ELECTRICAL, LIGHTING, AND FIRE PROTECTION ELEMENTS SHOWN FOR REFERENCE. SEE SPECIFIC DISCIPLINE SHEETS FOR SPECIFIC INFORMATION.

SCALE: A 8 0 8 16 SCALE OF FEET — TRUE PLAN

STATE OF COLORADO — ELIZABETH McCLURE HALLAS 203482 — LICENSED ARCHITECT — 1/16/2026

AE FIRM PRIME: OTAK, INC. REDMOND, WA SUBCONTRACTOR: ANDERSON HALLAS ARCHITECTS GOLDEN, CO	DESIGNED: CR / VC DRAWN: VC / MS / DM TECH REVIEW: CR / EMH DATE: 01/16/2026	SUB SHEET NO. A105	TITLE OF SHEET OVERALL REFLECTED CEILING PLAN REHABILITATE KAWUNEECHE VISITOR CENTER ROCKY MOUNTAIN NATIONAL PARK	DRAWING NO. 121 165639 PMIS/PKG NO. 326235 SHEET 67 OF 177

1/20/2026 10:19:26 AM Autodesk Docs://2024-260 NPS ROMO Kawuneeche VC DD-CA wOtak/2024260 NPS ROMO KAWUNEECHE VISITOR CENTER_BIM360.rvt

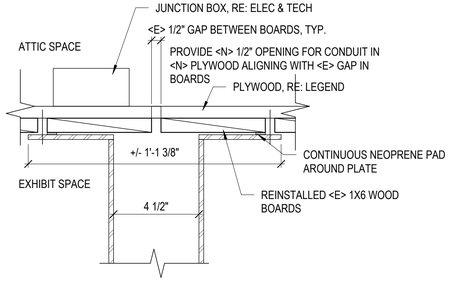

5 HANGING SIGNAGE ATTACHMENT DETAIL

A106 — SCALE B

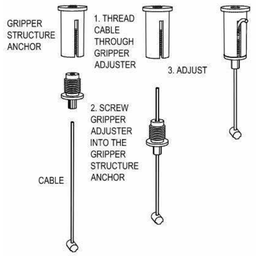

HANGING SIGNAGE HARDWARE DIAGRAM, PROVIDED FOR REFERENCE ONLY. REFER TO EXHIBIT DESIGN FOR ATTACHMENT LOCATIONS.

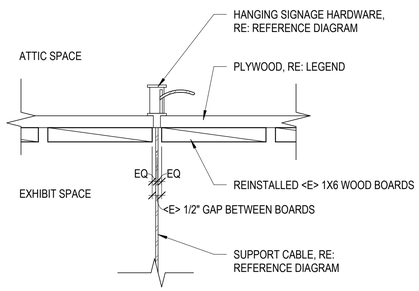

2 HANGING SIGNAGE ATTACHMENT DETAIL

A106 — SCALE B

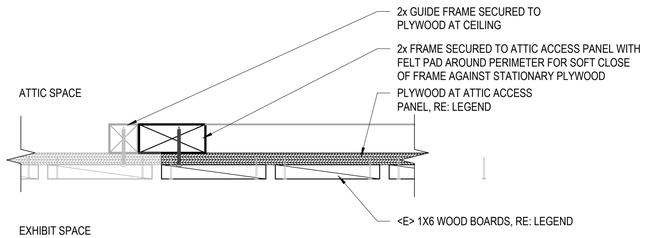

4 ATTIC ACCESS HATCH DETAIL

A106 — SCALE B

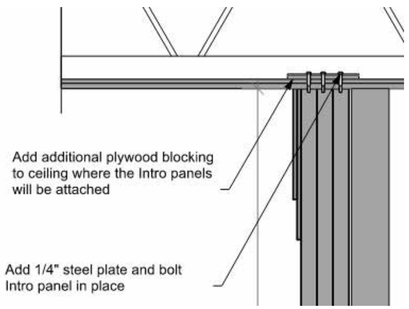

3 EXHIBIT DESIGN SIGNAGE ATTACHMENT DETAIL

A106 — N.T.S. — SHOWN FOR REFERENCE ONLY

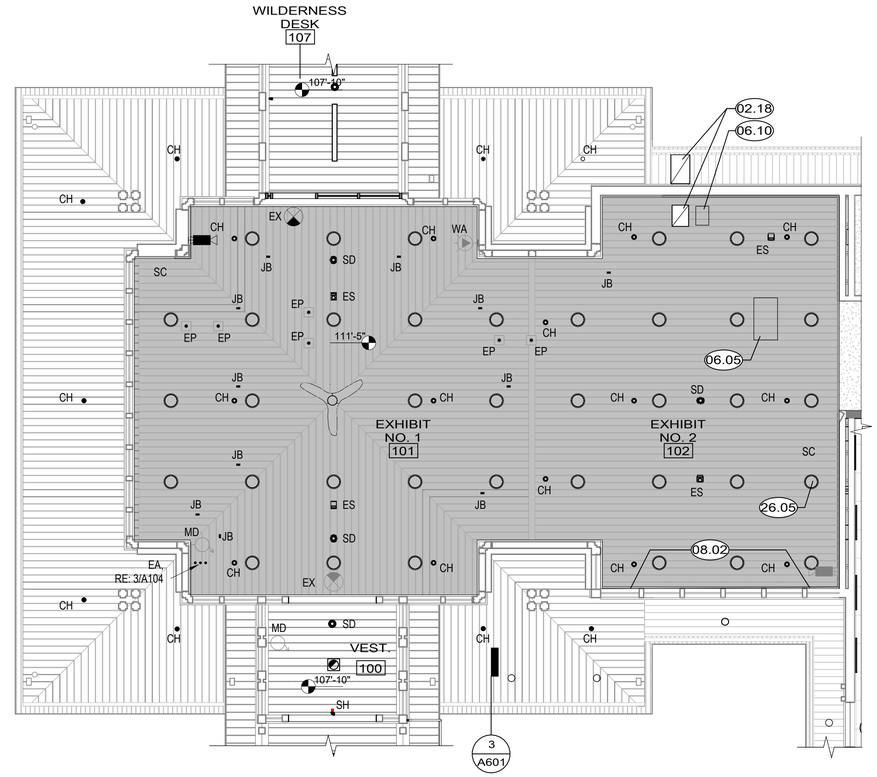

1 ENLARGED REFLECTED CEILING PLAN - EXHIBIT HALL

A106 — SCALE A

GENERAL NOTES

1. REFER TO SHEET G005 FOR CEILING TYPES.
2. PAINT ALL EXPOSED CONDUIT TO MATCH ADJACENT FINISH.
3. ALL FIRE SUPPRESSION PIPING CONCEALED WITHIN ATTIC TO BE BLACK STEEL.
4. COORDINATE WITH STRUCTURAL, MECHANICAL, PLUMBING, ELECTRICAL, TECHNOLOGY, FIRE SUPPRESSION, AND FIRE ALARM DRAWINGS FOR LOCATIONS OF CEILING FIXTURES. GC TO PROVIDE CONSOLIDATED SHOP DRAWINGS OF ALL SYSTEMS, AND PROVIDE REQUIRED MOCK UPS AND SAMPLES. GC TO MINIMIZE NUMBER AND SIZES OF PENETRATIONS IN HISTORIC WOOD CEILING AND ALIGN PENETRATIONS.
5. ALL INTERIOR AND EXTERIOR WOOD ELEMENTS (WINDOWS, BEAMS, SOFFITS, FASCIAS, COLUMNS, ETC.) SHALL BE PREPARED AND REFINISHED.
6. AT <E> WOOD BOARD CEILINGS, CENTER FIXTURES, SPRINKLER HEADS, AND EQUIPMENT ON BOARDS UNO AND ALIGN ACROSS THE ROOM. COORDINATE ALL LOCATIONS IN THE FIELD.
7. HANGING EXHIBIT SIGNAGE (BY OTHERS) IN <E> WOOD BOARD CEILINGS SHALL BE COORDINATED SO THAT CABLES RUN WITHIN THE EXISTING 1/2" GAP AND DO NOT IMPACT THE HISTORIC BOARD CEILING FINISH.
8. <E> RECESSED LIGHT FIXTURES TO BE REPLACED WITH <N> FIXTURE IN <E> PENETRATION, RE: ELEC.

KEYNOTES

02.18	<E> MECH SOFFIT VENT, RE: MECH. PAINT TO BLEND WITH SURROUNDING WOOD SOFFIT.
06.05	PROVIDE <N> 20"x36" ATTIC ACCESS PANEL IN <E> CEILING, CLAD PANEL WITH 1x6 WOOD PLANKS TO MATCH <E> CEILING FINISH. COORDINATE LOCATION IN CEILING WITH <E> ROOF FRAMING ABOVE. RE: DETAIL 4/A106
06.10	REINSTALL SALVAGED ATTIC ACCESS PANEL 1X6 BOARDS. REFINISH TO MATCH ADJACENT.
08.02	CAREFULLY REMOVE PANEL INFILL AT INTERIOR TO UNCOVER <E> GLAZING. ASSUME SOME WD REPAIR AT SILL AND FRAME
26.05	<N> RECESSED LIGHT FIXTURE INSTALLED IN <E> PENETRATION, TYP, RE: ELEC.

ABBREVIATIONS

CH	CONCEALED SPRINKLER HEAD (~1.5" DIA.*), RE: FIRE PROTECTION
EA	EXHIBIT ATTACHMENT TO CEILING (~2.5" DIA.*). RE: DETAIL 3/A106
EP	EXHIBIT SUPPORT POLE TO CEILING (~3" DIA). RE: EXHIBIT DESIGN & 5/A106
ES	EMERGENCY STROBE LIGHT (~1.5" DIA.*), RE: ELEC
EX	EXIT SIGNAGE (WALL MOUNTED), RE: ELEC
JB	JUNCTION BOX (FOR LIGHT TRACK) (~4" X 4" *), ABOVE CEILING, RE: ELEC
MD	MOTION DETECTOR, RE: TECH
SC	SECURITY CAMERA (WALL MOUNTED), RE: TECH
SD	SMOKE DETECTOR (~4" DIA.), RE: FIRE ALARM
SH	SPRINKLER HEAD (CEILING MOUNTED), RE: FIRE PROTECTION
WA	WIRELESS ACCESS POINT (WALL MOUNTED), RE: TECH

** RE: SPECIFICATIONS FOR ACTUAL PENETRATION SIZES / DIAMETERS.*

LEGEND

- <E> WALL OR CEILING TO REMAIN
- <N> GWB CEILING
- <E> 6" BOARD CEILING OR EXTERIOR SOFFIT, PREPARE AND REFINISH
- REINSTALL AND REFINISH 1X6 BOARD CEILING WITH 1/2" SPACE BETWEEN. SURFACE ATTACHED TO <N> PLYWOOD SUBSTRATE TO MATCH <E> ATTACHMENT SIZE, FINISH CADENCE AND PATTERN. ASSUME 5% <N> REPLACEMENT BOARDS TO MATCH <E> IN SPECIES, GRADE, SIZE, AND FINISH

ELECTRICAL, LIGHTING, AND FIRE PROTECTION ELEMENTS SHOWN FOR REFERENCE. SEE SPECIFIC DISCIPLINE SHEETS FOR SPECIFIC INFORMATION.

SCALE: B — 6 3 0 6 — SCALE OF INCHES

SCALE: A — 4 0 4 8 12 — SCALE OF FEET

TRUE PLAN

STATE OF COLORADO — 1/16/2026 — ELIZABETH McCLURE HALLAS 203482 — LICENSED ARCHITECT

KEY PLAN

AE FIRM

PRIME: OTAK, INC. REDMOND, WA

SUBCONTRACTOR: ANDERSON HALLAS ARCHITECTS GOLDEN, CO

DESIGNED: CR / VC

DRAWN: VC / MS / DM

TECH REVIEW: CR / EMH

DATE: 01/16/2026

SUB SHEET NO. A106

TITLE OF SHEET: ENLARGED REFLECTED CEILING PLAN - EXHIBIT

REHABILITATE KAWUNEECHE VISITOR CENTER
ROCKY MOUNTAIN NATIONAL PARK

DRAWING NO. 121 165639

PMIS/PKG NO. 326235

SHEET 68 OF 177

1/20/2026 10:34:05 AM Autodesk Docs://2024-260 NPS ROMO Kawuneeche VC DD-CA wOtak/2024260 NPS ROMO KAWUNEECHE VISITOR CENTER_BIM360.rvt

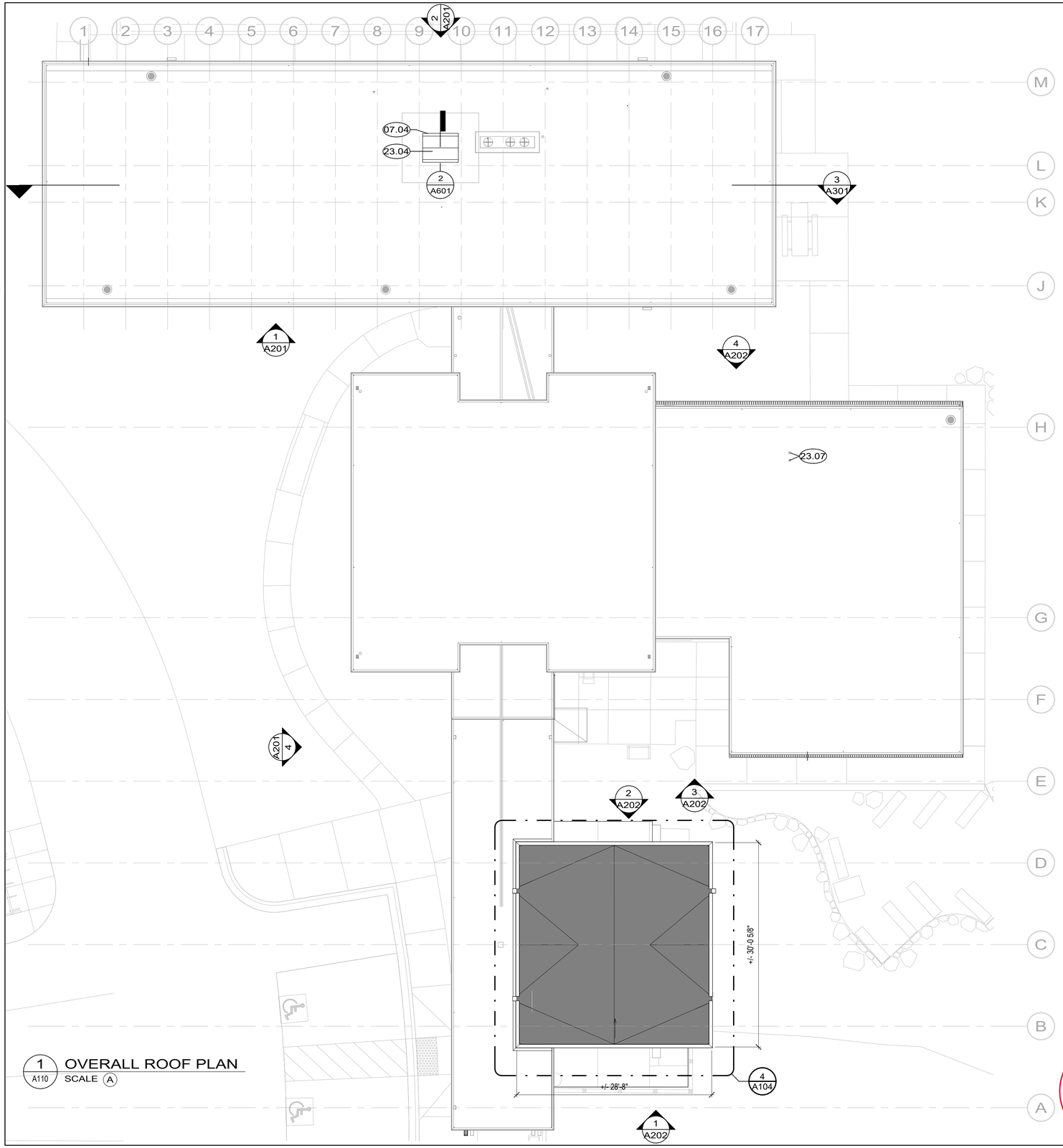

1 A110 OVERALL ROOF PLAN
SCALE A

GENERAL NOTES

1. CONTRACTOR SHALL BE RESPONSIBLE FOR PROTECTING ALL ELEMENTS/MATERIALS TO REMAIN.
2. PATCH AND REPAIR ALL FINISHES IMPACTED BY NEW WORK TO MATCH ADJACENT IN MATERIAL, COLOR, TEXTURE AND FINISH. TRANSITION <N> FINISHES TO BLEND AND APPEAR SEAMLESS. PROVIDE SAMPLES TO C.O. FOR APPROVAL.
3. PATCH PREVIOUS / ABANDONED ROOF PENETRATIONS FOR WATERTIGHT CONDITION.
4. TAPERED INSULATION IN THE FIELD OF <N> ROOF SHALL HAVE A FACTORY FORMED SLOPE OF MIN ¼" PER FOOT (0.25:12) IN ORDER TO SLOPE TO <N> SCUPPERS.
5. TAPERED INSULATION CRICKETS SHALL BE CONSTRUCTED WITH TAPERED INSULATION PANELS THAT HAVE A FACTORY FORMED SLOPE OF MIN ½" PER FOOT (.5:12).
6. CRICKETS AND CURBS TO BE PROVIDED AT ALL MECHANICAL DUCT PENETRATIONS. FLASH PER ROOFING MFR 30 YR DETAILS.
7. ROOF SLOPES ARE APPROXIMATE AS MEASURED IN FIELD. MAINTAIN EXISTING ROOF SLOPES.

KEYNOTES

07.04	PATCH <E> EPDM ROOFING PER MANUFACTURER INSTRUCTIONS TO CREATE WEATHERTIGHT SEAL AROUND <N> MECHANICAL PENETRATION.
23.04	<N> RELIEF HOOD, RE: MECH.
23.07	<E> VTR PENETRATION, RE: MECH

LEGEND

<E> ROOFING TO REMAIN, PROTECT IN PLACE

INSTALL <N> EPDM ROOFING OVER <N> HD POLYISO COVER BOARD OVER <N> TAPERED INSULATION WITH 1/4" MIN SLOPE TO DRAIN, OVER POLYISO INSULATION OVER <N> SUBSTRATE SHEATHING, RE: STRUC OVER <E> ROOF STRUCTURE.

<E> ROOF DRAIN, PROTECT IN PLACE

SCALE: A 8 0 8 16 SCALE OF FEET TRUE PLAN

STATE OF COLORADO
1-16-2026
ELIZABETH McCLURE HALLAS
203482
LICENSED ARCHITECT

AE FIRM PRIME: OTAK, INC. REDMOND, WA SUBCONTRACTOR: ANDERSON HALLAS ARCHITECTS GOLDEN, CO	DESIGNED: CR / VC DRAWN: VC / MS / DM TECH REVIEW: CR / EMH DATE: 01/16/2026	SUB SHEET NO. A110	TITLE OF SHEET OVERALL ROOF PLAN REHABILITATE KAWUNEECHE VISITOR CENTER ROCKY MOUNTAIN NATIONAL PARK	DRAWING NO. 121 165639 PMIS/PKG NO. 326235 SHEET 69 OF 177

1/20/2026 10:19:29 AM Autodesk Docs://2024-260 NPS ROMO Kawuneeche VC DD-CA wOtak/2024260 NPS ROMO KAWUNEECHE VISITOR CENTER_BIM360.rvt

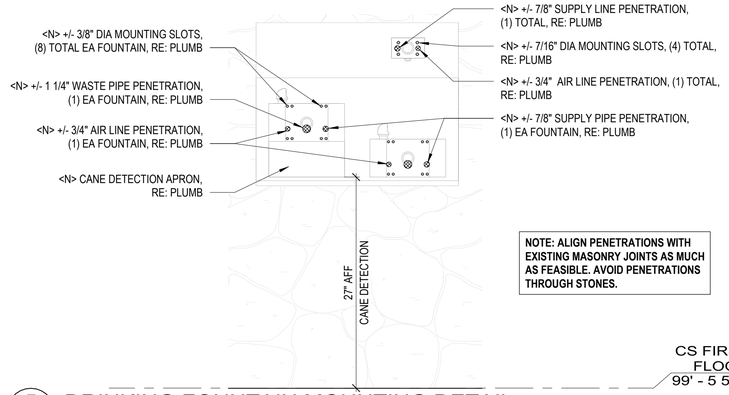

5 A201 DRINKING FOUNTAIN MOUNTING DETAIL
SCALE B

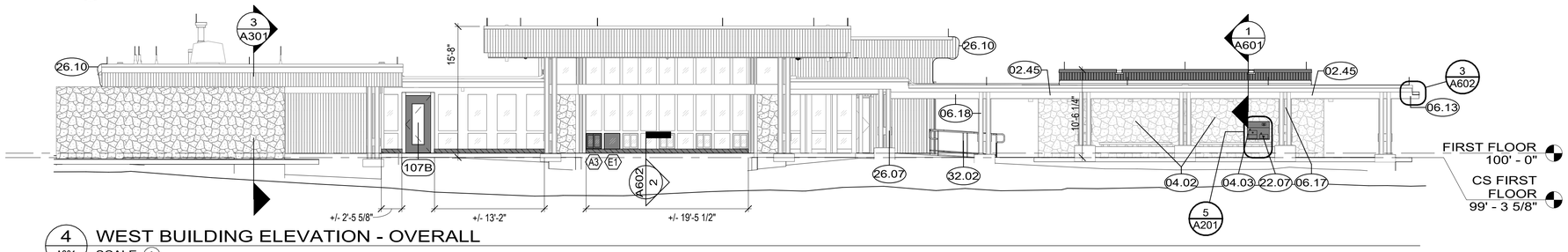

4 A201 WEST BUILDING ELEVATION - OVERALL
SCALE A

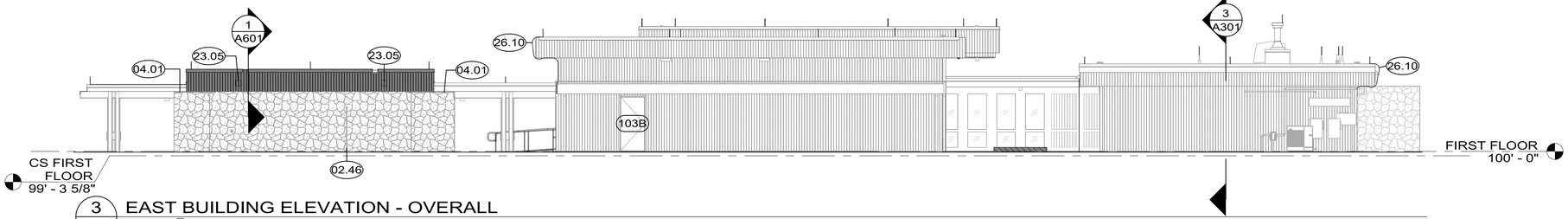

3 A201 EAST BUILDING ELEVATION - OVERALL
SCALE A

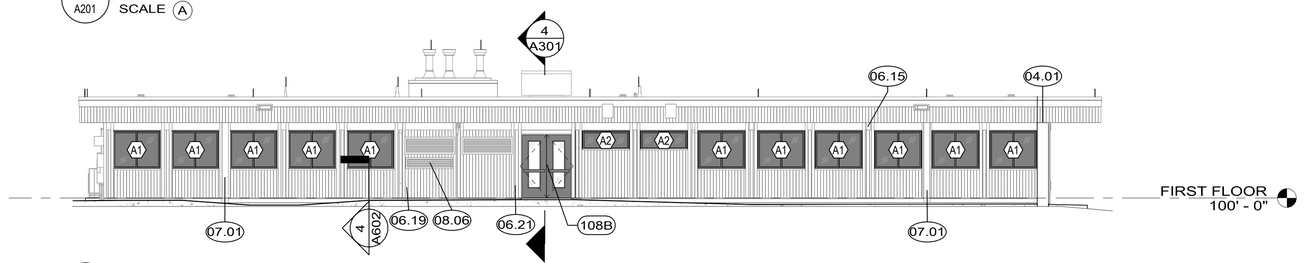

2 A201 NORTH BUILDING ELEVATION - ADMIN WING
SCALE A

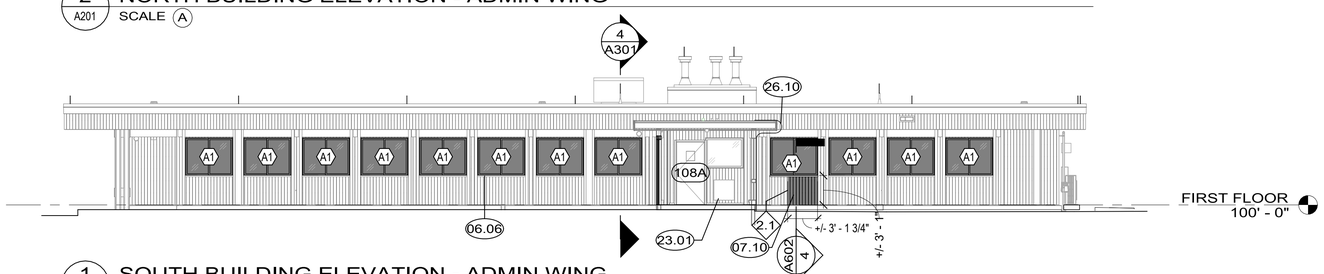

1 A201 SOUTH BUILDING ELEVATION - ADMIN WING
SCALE A

GENERAL NOTES

1. CONTRACTOR SHALL BE RESPONSIBLE FOR PROTECTING ALL ELEMENTS/MATERIALS TO REMAIN.
2. SYSTEMS WORK SHOWN FOR REFERENCE. REFER TO MECH, PLUMB, ELEC, TECH, AND FP SHEETS FOR ADDITIONAL INFORMATION.
3. PROTECT HISTORIC FABRIC TO REMAIN THROUGHOUT BUILDING DURING WORK. ALL REMOVAL/DEMO ACTIVITIES SHALL BE EXECUTED IN A MANNER WHICH PROTECTS ALL UNDERLYING MATERIALS TO REMAIN.
4. PATCH AND REPAIR ALL FINISHES IMPACTED BY NEW WORK TO MATCH ADJACENT IN MATERIAL, COLOR, TEXTURE AND FINISH. TRANSITION <N> FINISHES TO BLEND AND APPEAR SEAMLESS. PROVIDE SAMPLES TO C.O. FOR APPROVAL.
5. REMOVE ABANDONED APPURTENANCES AND PATCH SUBSTRATE TO MATCH <E> ADJ MATERIAL.
6. ALL EXTERIOR WOOD ELEMENTS (SIDING, WINDOWS, BEAMS, SOFFITS, FASCIAS, TRIM, COLUMNS, ETC.) SHALL BE PREPARED AND REPAINTED. REFER TO A520 FOR EXTERIOR FINISH SCHEDULE. ALLOW 10% OF WOOD REPAIR/REPLACEMENT IN KIND. PAINT SURFACE MOUNTED PIPES AND CONDUIT TO MATCH ADJACENT.
7. GENTLY CLEAN ALL <E> MASONRY. ASSUME 5% REPOINTING AFTER CLEANING. CONFIRM LOCATIONS WITH C.O.
8. REFER TO DOOR AND WINDOW SCHEDULES FOR FULL SCOPE OF WORK.

KEYNOTES

02.45	CAREFULLY REMOVE AND REINSTALL METAL RESTROOM SIGNAGE FOLLOWING EXTERIOR PAINTING
02.46	<E> PIPE, PT. RE: PLUMB
04.01	PROVIDE <N> CONCRETE PARGE CAP AT TOP OF EXISTING STONE WALL, SLOPE TOP TO DRAIN AWAY FROM BUILDING.
04.02	FILL ABANDONED HOLES IN MASONRY WITH MORTAR FILL TO MATCH <E> ADJ
04.03	PROVIDE <N> PENETRATIONS THROUGH <E> STONE MASONRY AND GROUT AS REQUIRED FOR THE INSTALLATION OF THE <N> DRINKING FOUNTAIN AND ASSOCIATED AIR AND WATER LINES, APPROX 2 SF OF OVERALL IMPACT. WHERE POSSIBLE, LOCATE PENETRATIONS THROUGH GROUT OR PREVIOUS FOUNTAIN PENETRATIONS TO MINIMIZE IMPACTS TO STONE. PATCH ALL ABANDONED PENETRATIONS IN KIND.
06.06	REPLACE DETERIORATED WD SILL IN KIND
06.13	REPAIR <E> BEAM END, RE: STRUCTURAL
06.15	FILL GAP AT TOP OF PILASTER WITH BACKER ROD AND SEALANT - PAINT TO MATCH ADJACENT
06.17	PATCH HOLES FROM REMOVED LIGHT FIXTURE
06.18	PATCH HOLES FROM REMOVED SIGNAGE
06.19	PROVIDE WD PATCH, APPROX 1" DIA HOLE EA
06.21	PATCH WD TRIM AND EAVE WHERE DOWNSPOUT IS REMOVED. PT TO MATCH <E> ADJACENT MATERIAL
07.01	<E> DOWNSPOUTS TO CONNECT TO <N> UNDERGROUND BOOT, RE: CIVIL
07.10	INSTALL <N> WALL INFILL AT REMOVED DOOR. <N> 2X4 FRAMING, SHEATHING, INSULATION, PTD GWB, AND PTD EXTERIOR FINISH MATERIAL TO MATCH <E> IN KIND, RE: G005 FOR WALL TYPE 2.1.
08.06	BLOCK OFF <E> MECH VENT AT INTERIOR. PROVIDE <N> MINERAL WOOL INSULATION WITHIN OPENING AND <N> GWB FINISH
22.07	<N> BI-LEVEL ABAAS DRINKING FOUNTAIN WITH FREEZE PROTECTION, INTEGRAL BOTTLE FILLER AND CANE DETECTION APRON, RE: PLUMB.
23.01	<N> VENT, RE: MECH.
23.05	<N> EXHAUST CAP, RE: MECH.
26.07	<N> POWER ASSISTED DOOR BUTTON, POLE MOUNTED. INSTALL PER ABAAS, RE: ELEC.
26.10	<N> LIGHTNING PROTECTION SYSTEM DOWNLEAD, RE: A603 AND ELEC
32.02	<N> HANDRAILS, RE: CIVIL

LEGEND

<N> CONSTRUCTION

<N> T1-11 SIDING TO MATCH <E> DIMENSIONS AT VISITOR CENTER FASCIA

REPLACE DETERIORATED OR CRACKED WD SILL IN KIND, RE: 2/A602

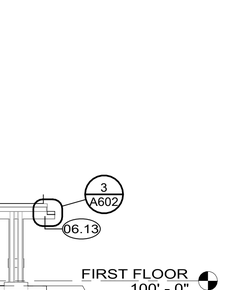

<E> DRINKING FOUNTAIN TO BE REMOVED AND REPLACED. REFER TO KEYNOTE 22.07

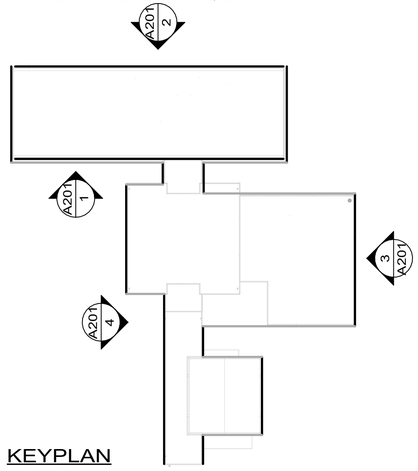

KEYPLAN

SCALE: B 1 0 1 2 SCALE OF FEET

SCALE: A 8 0 8 16 SCALE OF FEET

TRUE PLAN

STATE OF COLORADO
1-16-2026
ELIZABETH McCLURE HALLAS
203482
LICENSED ARCHITECT

AE FIRM PRIME: OTAK, INC. REDMOND, WA SUBCONTRACTOR: ANDERSON HALLAS ARCHITECTS GOLDEN, CO	DESIGNED: CR / VC CADD VC / MS / DM TECH REVIEW: CR / EMH DATE: 01/16/2026	SUB SHEET NO. A201	TITLE OF SHEET EXTERIOR ELEVATIONS REHABILITATE KAWUNEECHE VISITOR CENTER ROCKY MOUNTAIN NATIONAL PARK	DRAWING NO. 121 165639 PMIS/PKG NO. 326235 SHEET 70 OF 177

1/20/2026 10:19:42 AM Autodesk Docs://2024-260 NPS ROMO Kawuneeche VC DD-CA wOtak/2024260 NPS ROMO KAWUNEECHE VISITOR CENTER_BIM360.rvt

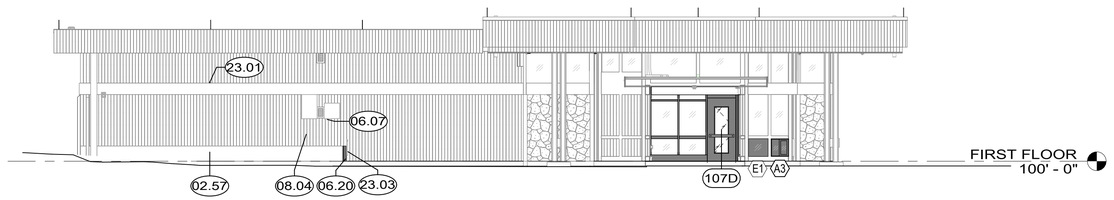

4 A202 NORTH BUILDING ELEVATION - VISITOR CENTER
SCALE A

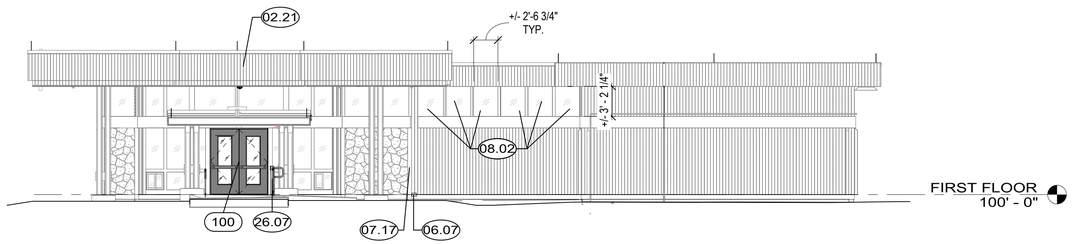

3 A202 SOUTH BUILDING ELEVATION - VISITOR CENTER
SCALE A

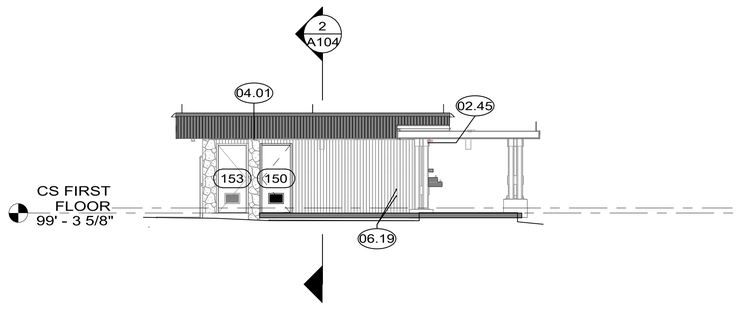

2 A202 NORTH BUILDING ELEVATION - COMFORT STATION
SCALE A

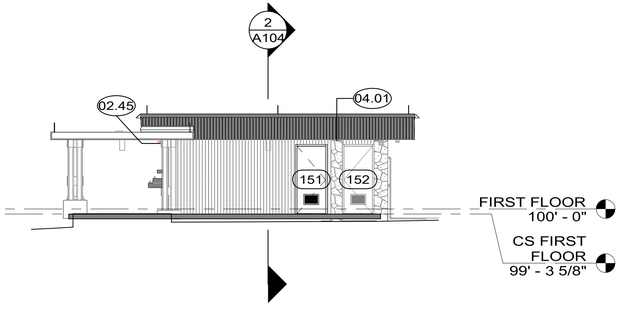

1 A202 SOUTH BUILDING ELEVATION - COMFORT STATION
SCALE A

GENERAL NOTES

1. CONTRACTOR SHALL BE RESPONSIBLE FOR PROTECTING ALL ELEMENTS/MATERIALS TO REMAIN.
2. SYSTEMS WORK SHOWN FOR REFERENCE. REFER TO MECH, PLUMB, ELEC, TECH, AND FP SHEETS FOR ADDITIONAL INFORMATION.
3. PROTECT HISTORIC FABRIC TO REMAIN THROUGHOUT BUILDING DURING WORK. ALL REMOVAL/DEMO ACTIVITIES SHALL BE EXECUTED IN A MANNER WHICH PROTECTS ALL UNDERLYING MATERIALS TO REMAIN.
4. PATCH AND REPAIR ALL FINISHES IMPACTED BY NEW WORK TO MATCH ADJACENT IN MATERIAL, COLOR, TEXTURE AND FINISH. TRANSITION <N> FINISHES TO BLEND AND APPEAR SEAMLESS. PROVIDE SAMPLES TO C.O. FOR APPROVAL.
5. REMOVE ABANDONED APPURTENANCES AND PATCH SUBSTRATE TO MATCH <E> ADJ MATERIAL.
6. ALL EXTERIOR WOOD ELEMENTS (SIDING, WINDOWS, BEAMS, SOFFITS, FASCIAS, TRIM, COLUMNS, ETC.) SHALL BE PREPARED AND REPAINTED. REFER TO A520 FOR EXTERIOR FINISH SCHEDULE. ALLOW 10% OF WOOD REPAIR/REPLACEMENT IN KIND. PAINT SURFACE MOUNTED PIPES AND CONDUIT TO MATCH ADJACENT.
7. GENTLY CLEAN ALL <E> MASONRY. ASSUME 5% REPOINTING AFTER CLEANING. CONFIRM LOCATIONS WITH C.O.
8. REFER TO DOOR AND WINDOW SCHEDULES FOR FULL SCOPE OF WORK.

KEYNOTES

02.21	CAREFULLY REMOVE AND SALVAGE <E> WIFI EXTENDER, RE: TECH. PATCH & PAINT ATTACHMENT HOLES.
02.45	CAREFULLY REMOVE AND REINSTALL METAL RESTROOM SIGNAGE FOLLOWING EXTERIOR PAINTING
02.57	REMOVE PAINT FROM ALL EXPOSED CONCRETE FOUNDATION
04.01	PROVIDE <N> CONCRETE PARGE CAP AT TOP OF EXISTING STONE WALL, SLOPE TOP TO DRAIN AWAY FROM BUILDING.
06.07	REATTACH LOOSE WD TRIM
06.19	PROVIDE WD PATCH, APPROX 1" DIA HOLE EA
06.20	PROVIDE <N> T1-11 TO MATCH <E>, APPROX 4" X 20"
07.17	PREP & REPAINT DOWNSPOUT TO MATCH ADJACENT
08.02	CAREFULLY REMOVE PANEL INFILL AT INTERIOR TO UNCOVER <E> GLAZING. ASSUME SOME WD REPAIR AT SILL AND FRAME
08.04	<N> PLUMBING VENT PENETRATION, SEAL PERIMETER. RE: PLUMB
23.01	<N> VENT, RE: MECH.
23.03	CONDENSATE DISCHARGE. RE: MECH.
26.07	<N> POWER ASSISTED DOOR BUTTON, POLE MOUNTED. INSTALL PER ABAAS, RE: ELEC.

LEGEND

<N> CONSTRUCTION

<N> T1-11 SIDING TO MATCH <E> DIMENSIONS AT VISITOR CENTER FASCIA

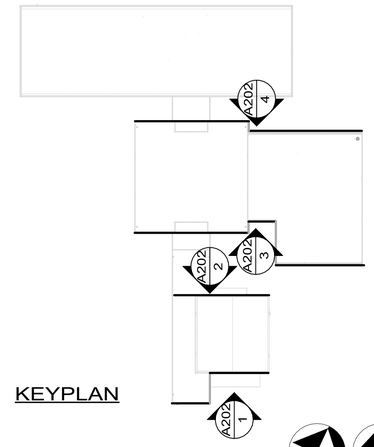

KEYPLAN

SCALE: A
8 0 8 16
SCALE OF FEET

TRUE PLAN

STATE OF COLORADO
1-16-2026
ELIZABETH McCLURE HALLAS
203482
LICENSED ARCHITECT

AE FIRM PRIME: OTAK, INC. REDMOND, WA SUBCONTRACTOR: ANDERSON HALLAS ARCHITECTS GOLDEN, CO	DESIGNED: CR / VC DRAWN: VC / MS / DM TECH REVIEW: CR / EMH DATE: 01/16/2026	SUB SHEET NO. A202	TITLE OF SHEET EXTERIOR ELEVATIONS REHABILITATE KAWUNEECHE VISITOR CENTER ROCKY MOUNTAIN NATIONAL PARK	DRAWING NO. 121 165639 PMIS/PKG NO. 326235 SHEET 71 OF 177

1/20/2026 10:19:45 AM Autodesk Docs://2024-260 NPS ROMO Kawuneeche VC DD-CA wOtak/2024260 NPS ROMO KAWUNEECHE VISITOR CENTER_BIM360.rvt

1/23/2026 9:24:39 AM Autodesk Docs://2024-260 NPS ROMO Kawuneeche VC DD-CA wOtak/2024260 NPS ROMO KAWUNEECHE VISITOR CENTER_BIM360.rvt

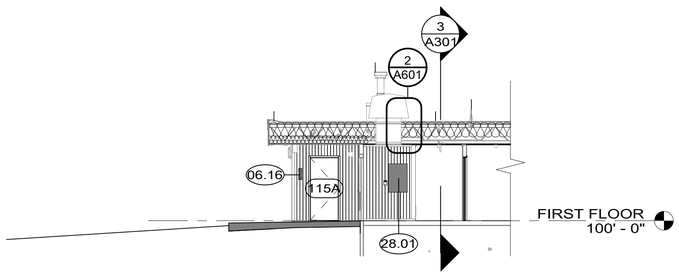

4 A301 BUILDING SECTION - NORTH ADMIN ENTRY
SCALE A

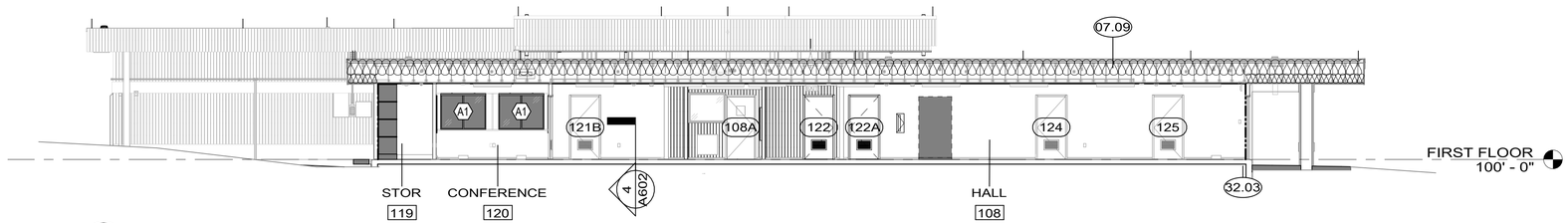

3 A301 BUILDING SECTION - ADMIN WING
SCALE A

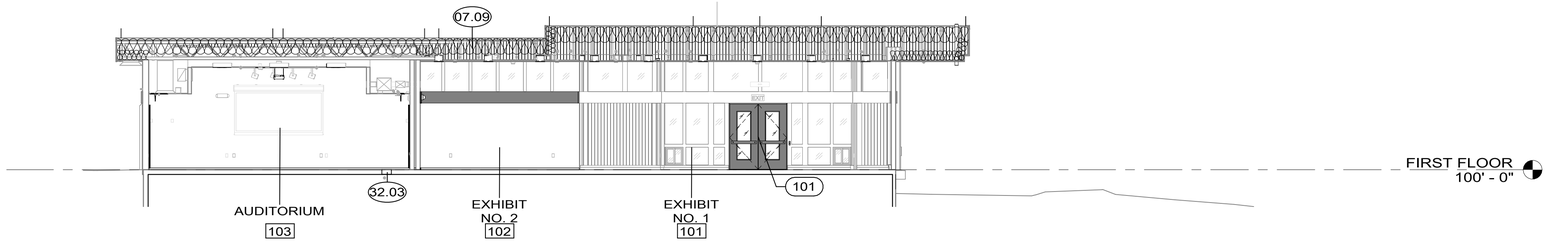

2 A301 BUILDING SECTION - VISITOR CENTER LOOKING SOUTH
SCALE A

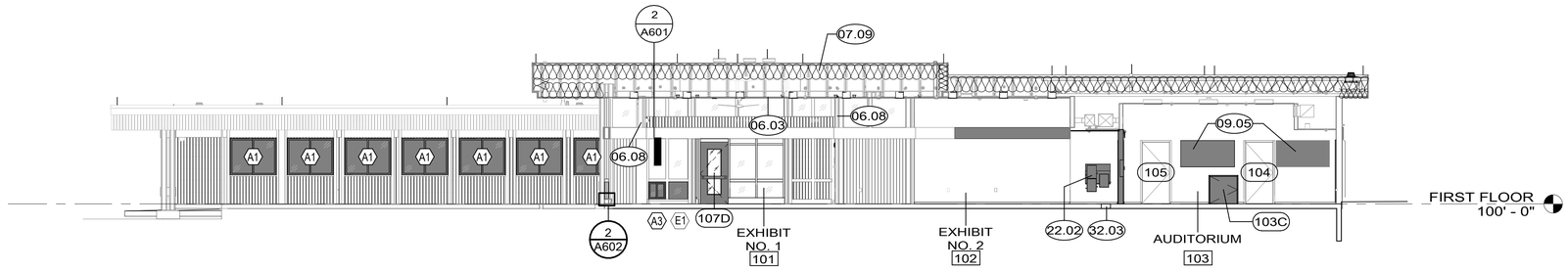

1 A301 BUILDING SECTION - VISITOR CENTER LOOKING NORTH
SCALE A

GENERAL NOTES

1. BUILDING SECTIONS INTENDED TO SHOW GENERAL LAYOUT, RELATIONSHIP BETWEEN SPACES, AND WALL SECTION REFERENCES. REFER TO FLOOR PLANS, RCPs, AND INTERIOR ELEVATIONS FOR DETAILED INFORMATION.
2. ADMIN WING/VISITOR CENTER FINISHED FLOOR ELEVATION: 100'-0" = USGS 8726.5'. COMFORT STATION FINISHED FLOOR ELEVATION: 99'-3 5/8" = USGS 8725.8'. RE: CIVIL
3. CONTRACTOR SHALL BE RESPONSIBLE FOR PROTECTING ALL ELEMENTS/MATERIALS TO REMAIN.
4. EXHIBIT DESIGN NOT SHOWN FOR CLARITY. REFER TO EXHIBIT DESIGN PACKAGE BY OTHERS. CONSTRUCTION, AND INSTALLATION BY OTHERS.
5. ALL EXISTING ELEMENTS ARE SHOWN BASED ON AVAILABLE INFORMATION, NON-DESTRUCTIVE FIELD OBSERVATION AND PREVIOUS DRAWINGS PROVIDED BY GOVERNMENT. CONTRACTOR TO FIELD VERIFY ALL EXISTING CONSTRUCTION AND NOTIFY ARCHITECT/C.O. OF ANY DISCREPANCY BETWEEN CONTRACT DOCUMENTS AND ACTUAL FIELD CONDITIONS AND REQUEST CLARIFICATION PRIOR TO PROCEEDING WITH CONSTRUCTION.
6. REFER TO CIVIL, STRUCTURAL, MECHANICAL, PLUMBING, ELECTRICAL, TECHNOLOGY, FIRE PROTECTION, AND FIRE ALARM DRAWINGS FOR ADDITIONAL SCOPE.
7. ALL CONSTRUCTION ACTIVITIES SHALL BE EXECUTED IN A MANNER WHICH PROTECTS ALL UNDERLYING HISTORIC MATERIALS.
8. ALL WORK TO COMPLY WITH SECRETARY OF INTERIOR STANDARDS FOR REHABILITATION.
9. REFER TO SHEET G005 FOR WALL TYPES.
10. REFER TO WINDOW AND DOOR SCHEDULE FOR SCOPE OF <N> AND REHABILITATION WORK.
11. ALL EXTERIOR FASCIAS, SOFFITS, COLUMNS, BEAMS TO REMAIN SHALL BE PREPARED AND REFINISHED.
12. REFER TO FINISH PLAN AND SCHEDULE FOR ADDITIONAL INFORMATION.
13. VERIFY DIMENSIONS OF ALL EXISTING CONSTRUCTION IN FIELD. EXPECT THAT EXISTING BUILDING ELEMENTS MAY NOT BE PLUMB, LEVEL OR SQUARE.
14. PATCH AND REPAIR ALL FINISHES IMPACTED BY NEW WORK TO MATCH ADJACENT IN MATERIAL, COLOR, TEXTURE AND FINISH. TRANSITION <N> FINISHES TO BLEND AND APPEAR SEAMLESS. PROVIDE SAMPLES TO C.O. FOR APPROVAL.
15. PATCH ALL MISCELLANEOUS HOLES, TO MATCH ADJACENT, UON.
16. PAINT ALL EXPOSED CONDUIT TO MATCH ADJACENT FINISH WITH DIRECT TO METAL PAINT.

KEYNOTES

06.03	REINSTALL AND REFINISH 1X6 BOARD CEILING WITH <N> PLYWOOD SUBSTRATE PAINTED BLACK. ASSUME 5% <N> REPLACEMENT BOARDS TO MATCH <E> IN SPECIES, GRADE, SIZE, AND FINISH
06.08	PROVIDE DUTCHMAN REPAIRS IN-KIND AS NEEDED TO REHABILITATE CONCEALED WD CORNER MULLION. FINISH TO MATCH <E>
06.16	PATCH <E> HISTORIC T1-11 SIDING IN KIND FOLLOWING METER REMOVAL
07.09	<N> MINERAL WOOL INSULATION ATTACHED TO UNDERSIDE OF ROOF DECK. R-38 MINIMUM. WRAP DOWN ROOF FASCIA AND ACROSS SOFFITS TO MEET BUILDING WALL, RE: A601
09.05	<N> SURFACE MOUNTED ACOUSTIC WALL PANELS, (11) VERTICAL PANELS APPROX 6'-8" X 2'-6" AND (3) HORIZONTAL PANELS APPROX 6'-2" X 2'-10". RE: A404 FOR APPROX LOCATIONS AND CONFIGURATION. CONFIRM MOUNTING LOCATIONS WITH C.O.
22.02	<N> BI-LEVEL ABAAS DRINKING FOUNTAIN WITH INTEGRAL BOTTLE FILLER AND CANE DETECTION APRON, RE: PLUMB
28.01	<N> FLUSH-MOUNT FIRE ALARM CONTROL PANEL, RE: FIRE ALARM, ELECTRICAL
32.03	<N> CONCRETE, RE: CIVIL AND STRUC

LEGEND

INTERIOR FACE OF EXTERIOR WALL: INSTALL MINERAL WOOL BOARD INSULATION FROM FLOOR TO STRUCTURE ABOVE WITHIN EXISTING WALL CAVITIES WITH SMART VAPOR RETARDER AT INTERIOR, SEAL ALL <E> PENETRATIONS AND GAPS IN EXTERIOR SHEATHING (FROM INSIDE WALL CAVITY). INSTALL <N> GWB WALL FINISH FROM FLOOR TO STRUCTURE ABOVE. REINSTALL SALVAGED WD TRIM AND WD FURRING. RE: FINISH SCHEDULE.

<N> CONSTRUCTION

SCALE: A 8 0 8 16
SCALE OF FEET

STATE OF COLORADO
1-16-2026
ELIZABETH McCLURE HALLAS
203482
LICENSED ARCHITECT

AE FIRM PRIME: OTAK, INC. REDMOND, WA SUBCONTRACTOR: ANDERSON HALLAS ARCHITECTS GOLDEN, CO	DESIGNED: CR / VC DRAWN: VC / MS / DM TECH REVIEW: CR / EMH DATE: 01/16/2026	SUB SHEET NO. A301	TITLE OF SHEET BUILDING SECTIONS REHABILITATE KAWUNEECHE VISITOR CENTER ROCKY MOUNTAIN NATIONAL PARK	DRAWING NO. 121 165639 PMIS/PKG NO. 326235 SHEET 72 OF 177

1/23/2026 9:28:34 AM Autodesk Docs://2024-260 NPS ROMO Kawuneeche VC DD-CA wOtak/2024260 NPS ROMO KAWUNEECHE VISITOR CENTER_BIM360.rvt

LEGEND

<N> CONSTRUCTION

ACCENT WALL TILE

KEYNOTES

02.20 <E> VENT TO REMAIN, PROTECT IN PLACE, RE: MECH.
08.05 <N> WALL ACCESS PANEL, 14" TALL AND 1'-5" ABOVE AFF, RE: PLUMB
10.02 <N> WALL MOUNTED BABY CHANGING STATION
10.04 INSTALL <N> SEMI RECESSED WASTE RECEPTACLE AND PAPER TOWEL DISPENSER, PROVIDE IN WALL WD BLOCKING.
10.07 <N> GRAB BARS. (1) 36" REAR, (1) 42" SIDE, AND (1) 18" VERTICAL. PROVIDE IN-WALL WD BLOCKING.
10.08 <N> ABAAS COMPLIANT 24" W x 36" H MIRROR WITH REFLECTIVE FRAME. FLUSH INSTALLATION TO FIELD TILE. SHIM AT GWB FINISH AND SEAL PERIMETER.
10.09 <N> ABAAS COMPLIANT LIQUID SOAP DISPENSER.
10.12 <N> ABAAS COMPLIANT RECESSED WASTE RECEPTACLE, PROVIDE IN WALL BLOCKING.
10.13 INSTALL <N> SINGLE ROLL TOILET PAPER DISPENSER.
10.14 INSTALL <N> (2) LARGE ROLL TOILET PAPER DISPENSER.
22.01 PROVIDE <N> PLUMBING FIXTURES AND ACCESSORIES, RE: PLUMB
22.08 <N> ABAAS COMPLIANT URINAL, RE: PLUMB
22.10 <N> WALL ACCESS PANELS FOR DRINKING FOUNTAIN
23.02 <N> METAL FLOOR REGISTER, RE: MECH.
26.01 <N> POWER ASSISTED DOOR BUTTON LOCATION, FLUSH MOUNTED. INSTALL PER ABAAS, RE: ELEC.
26.02 <N> ELECTRIC AUTOMATIC HAND DRYER, RE: ELEC.

GENERAL NOTES

1. ADMIN WING/VISITOR CENTER FINISHED FLOOR ELEVATION: 100'-0" = USGS 8726.5'. COMFORT STATION FINISHED FLOOR ELEVATION: 99'-3 5/8" = USGS 8725.8'. RE: CIVIL
2. CONTRACTOR SHALL BE RESPONSIBLE FOR PROTECTING ALL ELEMENTS/MATERIALS TO REMAIN.
3. ALL EXISTING ELEMENTS ARE SHOWN BASED ON AVAILABLE INFORMATION, NON-DESTRUCTIVE FIELD OBSERVATION AND PREVIOUS DRAWINGS PROVIDED BY GOVERNMENT. CONTRACTOR TO FIELD VERIFY ALL EXISTING CONSTRUCTION AND NOTIFY ARCHITECT/C.O. OF ANY DISCREPANCY BETWEEN CONTRACT DOCUMENTS AND ACTUAL FIELD CONDITIONS AND REQUEST CLARIFICATION PRIOR TO PROCEEDING WITH CONSTRUCTION.
4. REFER TO STRUCTURAL, MECHANICAL, PLUMBING, ELECTRICAL, TECHNOLOGY, FIRE PROTECTION, AND FIRE ALARM DRAWINGS FOR ADDITIONAL SCOPE.
5. ALL CONSTRUCTION ACTIVITIES SHALL BE EXECUTED IN A MANNER WHICH PROTECTS ALL UNDERLYING HISTORIC MATERIALS.
6. ALL WORK TO COMPLY WITH SECRETARY OF INTERIOR STANDARDS FOR REHABILITATION.
7. REFER TO SHEET G005 FOR WALL TYPES.
8. REFER TO WINDOW AND DOOR SCHEDULE FOR SCOPE OF <N> AND REHABILITATION WORK.
9. REFER TO FINISH PLAN AND SCHEDULE FOR ADDITIONAL INFORMATION.
10. VERIFY DIMENSIONS OF ALL EXISTING CONSTRUCTION IN FIELD. EXPECT THAT EXISTING BUILDING ELEMENTS MAY NOT BE PLUMB, LEVEL OR SQUARE.
11. PATCH AND REPAIR ALL FINISHES IMPACTED BY NEW WORK TO MATCH ADJACENT IN MATERIAL, COLOR, TEXTURE AND FINISH. TRANSITION <N> FINISHES TO BLEND AND APPEAR SEAMLESS. PROVIDE SAMPLES TO C.O. FOR APPROVAL.
12. PATCH ALL MISCELLANEOUS HOLES, TO MATCH ADJACENT, UON.
13. PAINT ALL EXPOSED CONDUIT TO MATCH ADJACENT FINISH WITH DIRECT TO METAL PAINT.
14. COORDINATE WATER CLOSET, FLUSH VALVE, AND GRAB BAR INSTALLATION TO ENSURE ADEQUATE SPACE FOR MANUAL OPERATION OF FLUSH VALVE BELOW GRAB BAR WHILE MAINTAINING ALL REQUIRED ABAAS MOUNTING HEIGHTS.
15. PROVIDE ADEQUATE BLOCKING, BACKING OR STRUCTURAL SUPPORT AS REQUIRED TO PROPERLY INSTALLATION OF ALL MOUNTED ASSEMBLIES, INCLUDING ALL ATTACHED EQUIPMENT, ACCESSORIES (GOVERNMENT AND CONTRACTOR FURNISHED ITEMS), PLUMBING FIXTURES, MILLWORK, AND CASEWORK.
16. ALL EXPOSED CASEWORK SURFACES TO BE FINISH FACES.
17. TOILET PARTITIONS SHOWN DASHED FOR CLARITY.

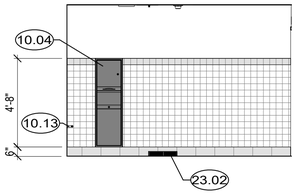

16 A401 RR NO. 113 - EAST
SCALE A

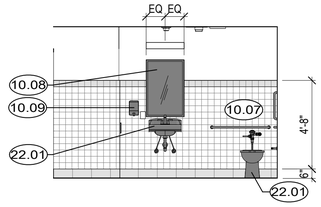

12 A401 RR NO. 113 - WEST
SCALE A

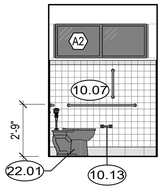

8 A401 RR NO. 113 - NORTH
SCALE A

4 A401 RR NO. 113 - SOUTH
SCALE A

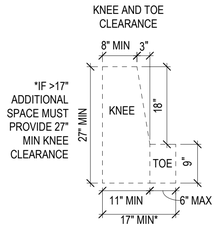

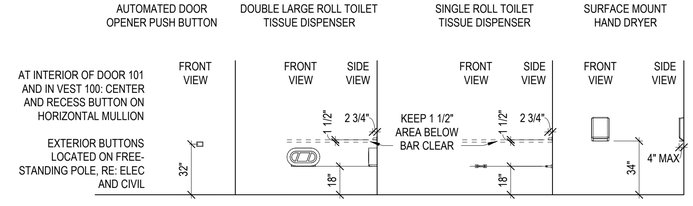

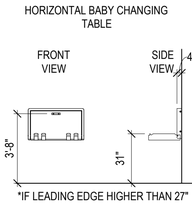

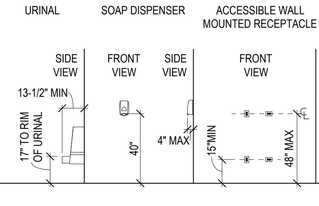

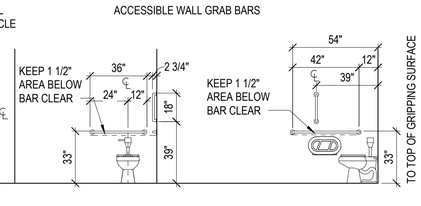

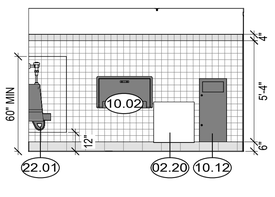

14 A401 MEN'S RR - EAST
SCALE A

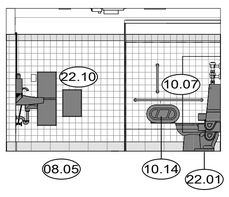

10 A401 MEN'S RR - WEST
SCALE A

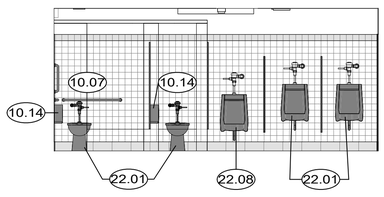

6 A401 MEN'S RR - NORTH
SCALE A

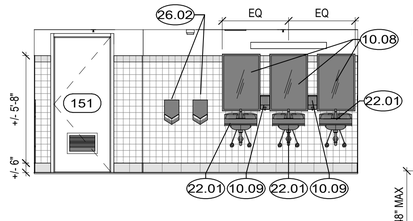

2 A401 MEN'S RR - SOUTH
SCALE A

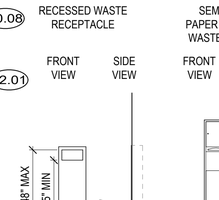

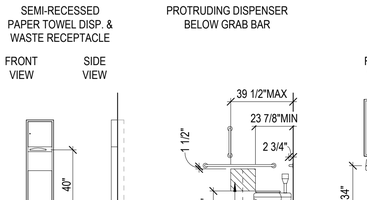

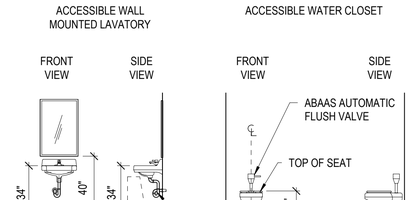

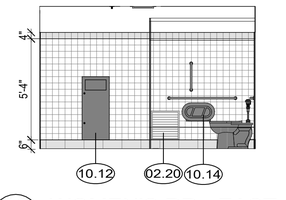

13 A401 WOMEN'S RR - EAST
SCALE A

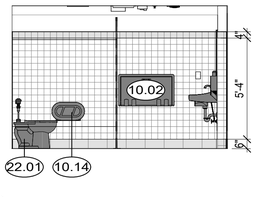

9 A401 WOMEN'S RR - WEST
SCALE A

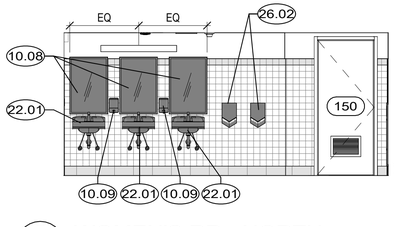

5 A401 WOMEN'S RR - NORTH
SCALE A

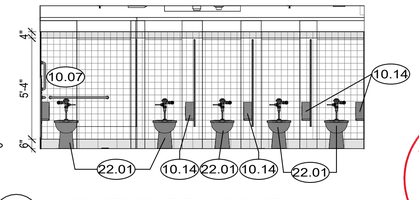

1 A401 WOMEN'S RR - SOUTH
SCALE A

SCALE: A
4 0 4 8
SCALE OF FEET

STATE OF COLORADO
1-16-2026
ELIZABETH McCLURE HALLAS
203482
LICENSED ARCHITECT

AE FIRM PRIME: OTAK, INC. REDMOND, WA SUBCONTRACTOR: ANDERSON HALLAS ARCHITECTS GOLDEN, CO	DESIGNED: CR / VC DRAWN: VC / MS / DM TECH REVIEW: CR / EMH DATE: 01/16/2026	SUB SHEET NO. A401	TITLE OF SHEET INTERIOR ELEVATIONS REHABILITATE KAWUNEECHE VISITOR CENTER ROCKY MOUNTAIN NATIONAL PARK	DRAWING NO. 121 165639 PMIS/PKG NO. 326235 SHEET 73 OF 177

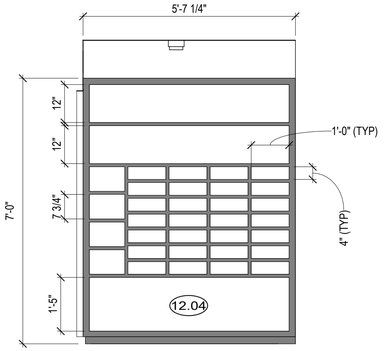

16 A402 MAIL 117 - WEST
SCALE (B)

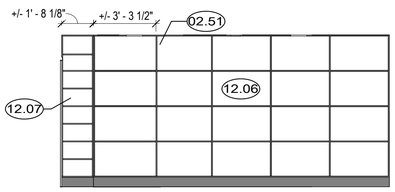

12 A402 STORAGE 119 - EAST
SCALE (A)

NOTE: ROOM MECH/ELEC 115 ELEVATIONS SHOWN FOR COORDINATION INTENT PURPOSES. IN DEPTH COORDINATION BETWEEN TRADES WILL BE REQUIRED. REFER TO PLUMBING, MECHANICAL, ELECTRICAL, AND FIRE PROTECTION FOR ADDITIONAL INFORMATION.

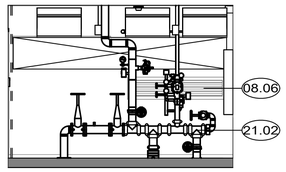

8 A402 MECH/ELEC 115 - NORTH
SCALE (A)

NOTE: ROOM MECH/ELEC 115 ELEVATIONS SHOWN FOR COORDINATION INTENT PURPOSES. IN DEPTH COORDINATION BETWEEN TRADES WILL BE REQUIRED. REFER TO PLUMBING, MECHANICAL, ELECTRICAL, AND FIRE PROTECTION FOR ADDITIONAL INFORMATION.

4 A402 MECH/ELEC 115 - EAST
SCALE (A)

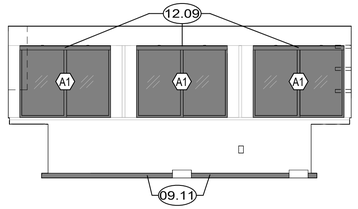

15 A402 BREAK ROOM 118 - NORTH
SCALE (A)

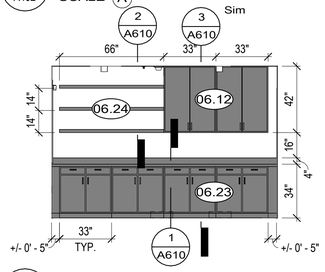

11 A402 BREAK ROOM 118 - EAST
SCALE (A)

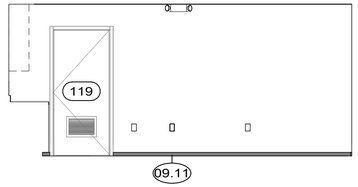

7 A402 BREAK ROOM 118 - SOUTH
SCALE (A)

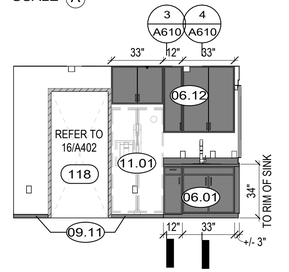

3 A402 BREAK ROOM 118 - WEST
SCALE (A)

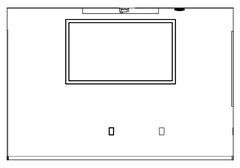

14 A402 CONFERENCE 120 - NORTH
SCALE (A)

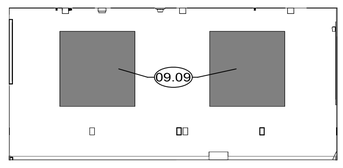

10 A402 CONFERENCE 120 - EAST
SCALE (A)

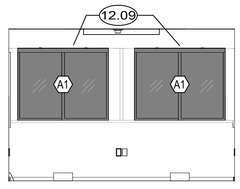

6 A402 CONFERENCE 120 - SOUTH
SCALE (A)

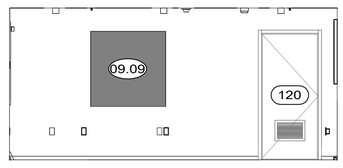

2 A402 CONFERENCE 120 - WEST
SCALE (A)

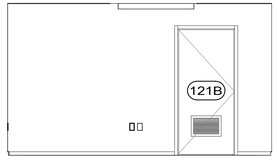

13 A402 OFFICE 121 - NORTH
SCALE (A)

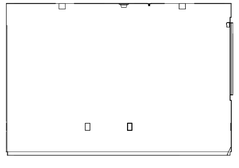

9 A402 OFFICE 121 - EAST
SCALE (A)

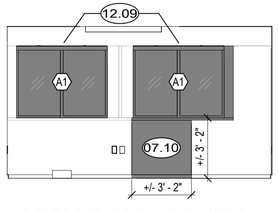

5 A402 OFFICE 121 - SOUTH
SCALE (A)

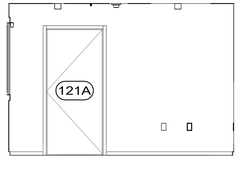

1 A402 OFFICE 121 - WEST
SCALE (A)

TYPICAL OFFICE WALL REPAIRS: PATCH ALL MISCELLANEOUS HOLES FROM REMOVED FASTENERS, WALL-MOUNTED CONDUIT, ABANDONED DEVICES, AND REMOVED WALL PLATES. REPAIR SURFACE DAMAGE RESULTING FROM CONVERTING <E> FOUR-GANG OUTLETS TO TWO-GANG OUTLETS OR SIMILAR DEVICE CHANGES, RE: ELEC & TECH. FINISH TO MATCH ADJACENT SURFACES. PROVIDE PATCH IN KIND WHERE WALL BASE TRIM IS DAMAGED OR MISSING, APPROX 2 INCHES PER ROOM.

GENERAL NOTES

1. ADMIN WING/VISITOR CENTER FINISHED FLOOR ELEVATION: 100'-0" = USGS 8726.5'. COMFORT STATION FINISHED FLOOR ELEVATION: 99'-3 5/8" = USGS 8725.8'. RE: CIVIL
2. CONTRACTOR SHALL BE RESPONSIBLE FOR PROTECTING ALL ELEMENTS/MATERIALS TO REMAIN.
3. EXHIBIT DESIGN NOT SHOWN FOR CLARITY. REFER TO EXHIBIT DESIGN PACKAGE BY OTHERS. CONSTRUCTION, AND INSTALLATION BY OTHERS.
4. ALL EXISTING ELEMENTS ARE SHOWN BASED ON AVAILABLE INFORMATION, NON-DESTRUCTIVE FIELD OBSERVATION AND PREVIOUS DRAWINGS PROVIDED BY GOVERNMENT. CONTRACTOR TO FIELD VERIFY ALL EXISTING CONSTRUCTION AND NOTIFY ARCHITECT/C.O. OF ANY DISCREPANCY BETWEEN CONTRACT DOCUMENTS AND ACTUAL FIELD CONDITIONS AND REQUEST CLARIFICATION PRIOR TO PROCEEDING WITH CONSTRUCTION.
5. REFER TO STRUCTURAL, MECHANICAL, PLUMBING, ELECTRICAL, TECHNOLOGY, FIRE PROTECTION, AND FIRE ALARM DRAWINGS FOR ADDITIONAL SCOPE.
6. ALL CONSTRUCTION ACTIVITIES SHALL BE EXECUTED IN A MANNER WHICH PROTECTS ALL UNDERLYING HISTORIC MATERIALS.
7. ALL WORK TO COMPLY WITH SECRETARY OF INTERIOR STANDARDS FOR REHABILITATION.
8. REFER TO SHEET G005 FOR WALL TYPES.
9. REFER TO WINDOW AND DOOR SCHEDULE FOR SCOPE OF <N> AND REHABILITATION WORK.
10. REFER TO FINISH PLAN AND SCHEDULE FOR ADDITIONAL INFORMATION.
11. VERIFY DIMENSIONS OF ALL EXISTING CONSTRUCTION IN FIELD. EXPECT THAT EXISTING BUILDING ELEMENTS MAY NOT BE PLUMB, LEVEL OR SQUARE.
12. PATCH AND REPAIR ALL FINISHES IMPACTED BY NEW WORK TO MATCH ADJACENT IN MATERIAL, COLOR, TEXTURE AND FINISH. TRANSITION <N> FINISHES TO BLEND AND APPEAR SEAMLESS. PROVIDE SAMPLES TO C.O. FOR APPROVAL.
13. PATCH ALL MISCELLANEOUS HOLES, TO MATCH ADJACENT, UON.
14. PAINT ALL EXPOSED CONDUIT TO MATCH ADJACENT FINISH WITH DIRECT TO METAL PAINT.
15. COORDINATE WATER CLOSET, FLUSH VALVE, AND GRAB BAR INSTALLATION TO ENSURE ADEQUATE SPACE FOR MANUAL OPERATION OF FLUSH VALVE BELOW GRAB BAR WHILE MAINTAINING ALL REQUIRED ABAAS MOUNTING HEIGHTS.
16. PROVIDE ADEQUATE BLOCKING, BACKING OR STRUCTURAL SUPPORT AS REQUIRED TO PROPERLY INSTALLATION OF ALL MOUNTED ASSEMBLIES, INCLUDING ALL ATTACHED EQUIPMENT, ACCESSORIES (GOVERNMENT AND CONTRACTOR FURNISHED ITEMS), PLUMBING FIXTURES, MILLWORK, AND CASEWORK.
17. ALL EXPOSED CASEWORK SURFACES TO BE FINISH FACES.
18. TOILET PARTITIONS SHOWN DASHED FOR CLARITY.

KEYNOTES

02.51	<E> COLUMN TO REMAIN.
06.01	PROVIDE <N> WD BASE CABINETS WITH FINISH END PANEL AND SOLID SURFACE COUNTERTOP WITH 4 INCH INTEGRAL BACKSPLASH AND STAINLESS STEEL SINK, RE: PLUMB
06.12	PROVIDE <N> WALL CABINETS - 24" DEEP OVER REFRIGERATOR, 12" DEEP AT OVER COUNTER. FINISH BOTH SIDES AND END PANELS OF CABINETS
06.23	PROVIDE <N> WD BASE CABINETS AND SOLID SURFACE COUNTERTOP WITH 4 INCH INTEGRAL BACKSPLASH
06.24	PROVIDE <N> WD VENEER FLOATING SHELVES MOUNTED ON HEAVY DUTY HIDDEN BRACKETS
07.10	INSTALL <N> WALL INFILL AT REMOVED DOOR. <N> 2X4 FRAMING, SHEATHING, INSULATION, PTD GWB, AND PTD EXTERIOR FINISH MATERIAL TO MATCH <E> IN KIND, RE: G005 FOR WALL TYPE 2.1.
08.06	BLOCK OFF <E> MECH VENT AT INTERIOR. PROVIDE <N> MINERAL WOOL INSULATION WITHIN OPENING AND <N> GWB FINISH
09.09	<N> SURFACE MOUNTED ACOUSTIC PIN BOARD 48" X 48"
09.11	INSTALL <N> WD WALL BASE TRIM TO MATCH <E>
11.01	<N> FULL-SIZED REFRIGERATOR PROVIDED BY PARK, INSTALLED BY GC, MAX 33" WIDTH AND 70" HEIGHT.
12.04	PROVIDE <N> CUSTOM WD CASEWORK FOR MAILBOXES, PACKAGE ORGANIZATION, AND GENERAL STORAGE FULL HEIGHT
12.06	INSTALL FLOOR-TO-CEILING WD BUILT-IN 2' DEEP WITH ADJUSTABLE WD SHELVING
12.07	INSTALL FLOOR-TO-CEILING WD BUILT-IN 14" DEEP WITH ADJUSTABLE WD SHELVING
12.09	<N> MANUAL CELLULAR WINDOW SHADES, RE: A510
21.02	<N> FIRE RISER, RE: FIRE PROTECTION

LEGEND

<N> CONSTRUCTION

REINSTALL SALVAGED HISTORIC TRIM

ACCESSIBLE WALL MOUNTED RECEPTACLE

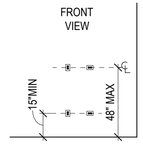

SCALE: (B) 2 0 2 4 SCALE OF FEET

SCALE: (A) 4 0 4 8 SCALE OF FEET

STATE OF COLORADO
1-16-2026
ELIZABETH McCLURE HALLAS
203482
LICENSED ARCHITECT

AE FIRM PRIME: OTAK, INC. REDMOND, WA SUBCONTRACTOR: ANDERSON HALLAS ARCHITECTS GOLDEN, CO	DESIGNED: CR / VC DRAWN: VC / MS / DM TECH REVIEW: CR / EMH DATE: 01/16/2026	SUB SHEET NO. A402	TITLE OF SHEET INTERIOR ELEVATIONS REHABILITATE KAWUNEECHE VISITOR CENTER ROCKY MOUNTAIN NATIONAL PARK	DRAWING NO. 121 165639 PMIS/PKG NO. 326235 SHEET 74 OF 177

1/23/2026 9:35:25 AM Autodesk Docs://2024-260 NPS ROMO Kawuneeche VC DD-CA wOtak/2024260 NPS ROMO KAWUNEECHE VISITOR CENTER_BIM360.rvt

TYP COLUMN IMPACT TO TOP OF COLUMN
REFER TO KEYNOTE 06.14

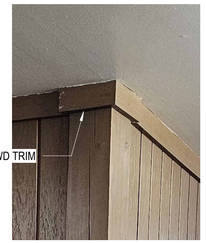

TYP COLUMN AND TRIM
REFER TO KEYNOTE 06.14

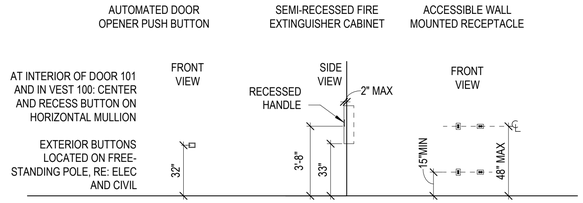

GENERAL NOTES

1. ADMIN WING/VISITOR CENTER FINISHED FLOOR ELEVATION: 100'-0" = USGS 8726.5'. COMFORT STATION FINISHED FLOOR ELEVATION: 99'-3 5/8" = USGS 8725.8'. RE: CIVIL
2. CONTRACTOR SHALL BE RESPONSIBLE FOR PROTECTING ALL ELEMENTS/MATERIALS TO REMAIN.
3. EXHIBIT DESIGN NOT SHOWN FOR CLARITY. REFER TO EXHIBIT DESIGN PACKAGE BY OTHERS. CONSTRUCTION, AND INSTALLATION BY OTHERS.
4. ALL EXISTING ELEMENTS ARE SHOWN BASED ON AVAILABLE INFORMATION, NON-DESTRUCTIVE FIELD OBSERVATION AND PREVIOUS DRAWINGS PROVIDED BY GOVERNMENT. CONTRACTOR TO FIELD VERIFY ALL EXISTING CONSTRUCTION AND NOTIFY ARCHITECT/C.O. OF ANY DISCREPANCY BETWEEN CONTRACT DOCUMENTS AND ACTUAL FIELD CONDITIONS AND REQUEST CLARIFICATION PRIOR TO PROCEEDING WITH CONSTRUCTION.
5. REFER TO STRUCTURAL, MECHANICAL, PLUMBING, ELECTRICAL, TECHNOLOGY, FIRE PROTECTION, AND FIRE ALARM DRAWINGS FOR ADDITIONAL SCOPE.
6. ALL CONSTRUCTION ACTIVITIES SHALL BE EXECUTED IN A MANNER WHICH PROTECTS ALL UNDERLYING HISTORIC MATERIALS.
7. ALL WORK TO COMPLY WITH SECRETARY OF INTERIOR STANDARDS FOR REHABILITATION.
8. REFER TO SHEET G005 FOR WALL TYPES.
9. REFER TO WINDOW AND DOOR SCHEDULE FOR SCOPE OF <N> AND REHABILITATION WORK.
10. REFER TO FINISH PLAN AND SCHEDULE FOR ADDITIONAL INFORMATION.
11. VERIFY DIMENSIONS OF ALL EXISTING CONSTRUCTION IN FIELD. EXPECT THAT EXISTING BUILDING ELEMENTS MAY NOT BE PLUMB, LEVEL OR SQUARE.
12. PATCH AND REPAIR ALL FINISHES IMPACTED BY NEW WORK TO MATCH ADJACENT IN MATERIAL, COLOR, TEXTURE AND FINISH. TRANSITION <N> FINISHES TO BLEND AND APPEAR SEAMLESS. PROVIDE SAMPLES TO C.O. FOR APPROVAL.
13. PATCH ALL MISCELLANEOUS HOLES, TO MATCH ADJACENT, UON.
14. PAINT ALL EXPOSED CONDUIT TO MATCH ADJACENT FINISH WITH DIRECT TO METAL PAINT.
15. COORDINATE WATER CLOSET, FLUSH VALVE, AND GRAB BAR INSTALLATION TO ENSURE ADEQUATE SPACE FOR MANUAL OPERATION OF FLUSH VALVE BELOW GRAB BAR WHILE MAINTAINING ALL REQUIRED ABAAS MOUNTING HEIGHTS.
16. PROVIDE ADEQUATE BLOCKING, BACKING OR STRUCTURAL SUPPORT AS REQUIRED TO PROPERLY INSTALLATION OF ALL MOUNTED ASSEMBLIES, INCLUDING ALL ATTACHED EQUIPMENT, ACCESSORIES (GOVERNMENT AND CONTRACTOR FURNISHED ITEMS), PLUMBING FIXTURES, MILLWORK, AND CASEWORK.
17. ALL EXPOSED CASEWORK SURFACES TO BE FINISH FACES.
18. TOILET PARTITIONS SHOWN DASHED FOR CLARITY.

KEYNOTES

02.31	<E> WD DOOR TRIM TO REMAIN. PROTECT IN PLACE. MODIFY AS REQUIRED FOR DOOR MODIFICATIONS.
02.35	<E> FIREHOSE CABINET TO REMAIN. PROTECT IN PLACE. REMOVE ANY WAYFINDING SIGNAGE RELATED TO THIS HOSE CABINET.
06.14	PROVIDE WOOD REPAIR FOR TOP OF COLUMN
08.01	<N> WD GLASS PARTITION, HOLD 6" FROM CEILING FOR AIR CIRCULATION RE: MECH
09.11	INSTALL <N> WD WALL BASE TRIM TO MATCH <E>
09.14	PROVIDE <N> GWB FINISH FOLLOWING STRUCTURAL WORK AT DOOR HEADER. PROVIDE SMOOTH TRANSITION BETWEEN <N> AND ADJACENT <E> WALL FINISHES.
10.05	<N> SEMI-RECESSED FIRE EXTINGUISHER CABINET
12.10	<N> CUSTOM BULLETIN BOARD INSTALLED OVER <E> FIREHOSE CABINET, RE: 5/A610
23.01	<N> VENT, RE: MECH.
26.08	<N> CONDUIT, RE: ELEC
28.01	<N> FLUSH-MOUNT FIRE ALARM CONTROL PANEL, RE: FIRE ALARM, ELECTRICAL

LEGEND

<N> CONSTRUCTION, RE: G005 FOR WALL ASSEMBLIES

<N> SURFACE MOUNTED ACOUSTIC WALL PANELS, (11) VERTICAL PANELS APPROX 6'-8" X 2'-6" AND (3) HORIZONTAL PANELS APPROX 6'-2" X 2'-10". RE: A404 FOR APPROX LOCATIONS AND CONFIGURATION. CONFIRM MOUNTING LOCATIONS WITH C.O.

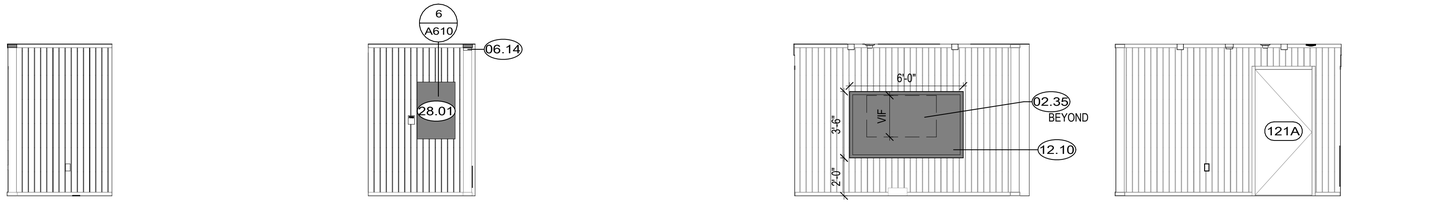

11 A403 HALL 108 - UPPER WEST SCALE A

10 A403 HALL 108 - UPPER EAST SCALE A

9 A403 HALL 108 - LOWER WEST SCALE A

8 A403 HALL 108 - LOWER EAST SCALE A

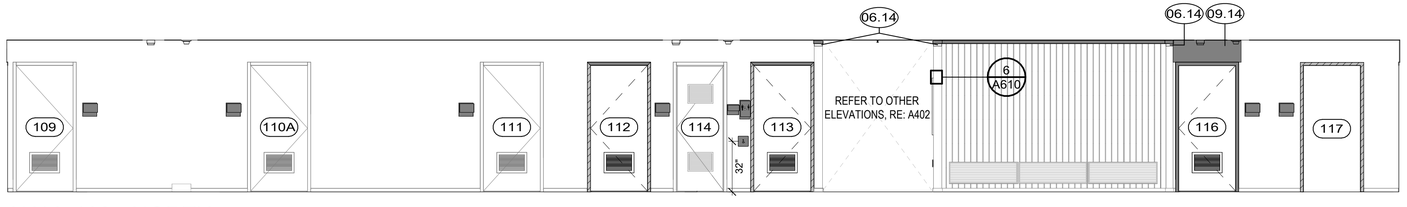

7 A403 HALL 108 - NORTH SCALE A

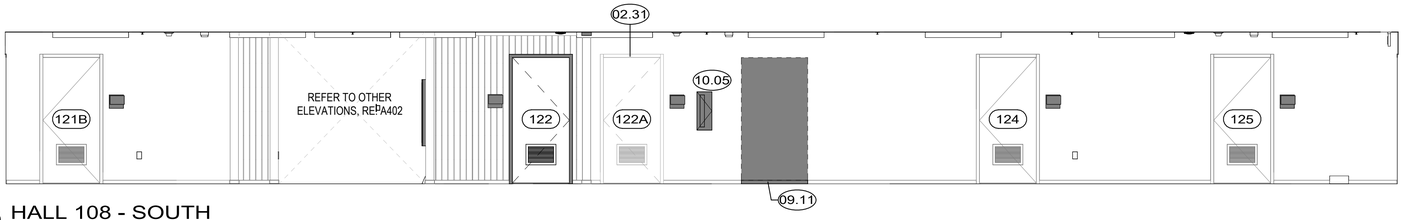

6 A403 HALL 108 - SOUTH SCALE A

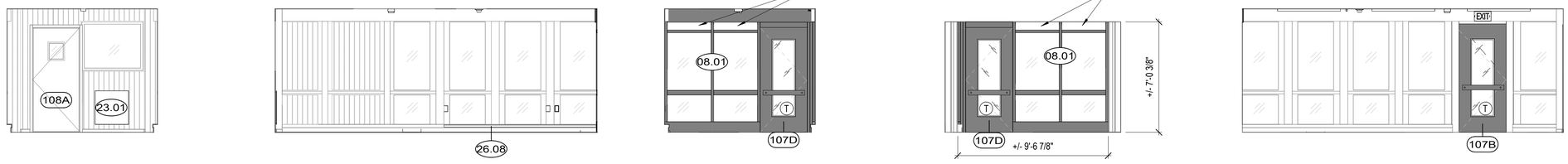

5 A403 WILD. DESK 107 - NORTH SCALE A

4 A403 WILD. DESK 107 - EAST SCALE A

3 A403 WILD. DESK 107 - SOUTH SCALE A SEE DETAIL REF & TEMPERED GLAZING NOTES ON A501

2 A403 WILD. DESK ENTRY SCALE A SEE DETAIL REF & TEMPERED GLAZING NOTES ON A501

1 A403 WILD. DESK 107 - WEST SCALE A

SCALE: A 4 0 4 8
SCALE OF FEET

STATE OF COLORADO
1-16-2026
ELIZABETH McCLURE HALLAS
203482
LICENSED ARCHITECT

AE FIRM PRIME: OTAK, INC. REDMOND, WA SUBCONTRACTOR: ANDERSON HALLAS ARCHITECTS GOLDEN, CO	DESIGNED: CR / VC DRAWN: VC / MS / DM TECH REVIEW: CR / EMH DATE: 01/16/2026	SUB SHEET NO. A403	TITLE OF SHEET INTERIOR ELEVATIONS REHABILITATE KAWUNEECHE VISITOR CENTER ROCKY MOUNTAIN NATIONAL PARK	DRAWING NO. 121 165639 PMIS/PKG NO. 326235 SHEET 75 OF 177

1/20/2026 10:20:01 AM Autodesk Docs://2024-260 NPS ROMO Kawuneeche VC DD-CA wOtak/2024260 NPS ROMO KAWUNEECHE VISITOR CENTER_BIM360.rvt

1/20/2026 10:20:03 AM Autodesk Docs://2024-260 NPS ROMO Kawuneeche VC DD-CA wOtak/2024260 NPS ROMO KAWUNEECHE VISITOR CENTER_BIM360.rvt

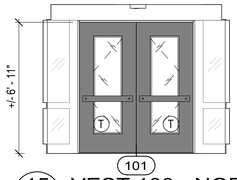

15 A404 VEST 100 - NORTH
SCALE A

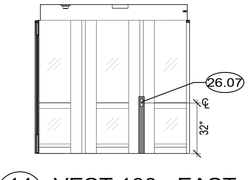

14 A404 VEST 100 - EAST
SCALE A

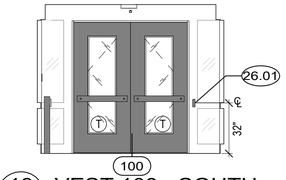

13 A404 VEST 100 - SOUTH
SCALE A

12 A404 VEST 100 - WEST
SCALE A

LEGEND

<N> CONSTRUCTION, RE: G005 FOR WALL ASSEMBLIES

<N> SURFACE MOUNTED ACOUSTIC WALL PANELS, (11) VERTICAL PANELS APPROX 6'-8" X 2'-6" AND (3) HORIZONTAL PANELS APPROX 6'-2" X 2'-10". RE: A404 FOR APPROX LOCATIONS AND CONFIGURATION. CONFIRM MOUNTING LOCATIONS WITH C.O.

GENERAL NOTES

1. ADMIN WING/VISITOR CENTER FINISHED FLOOR ELEVATION: 100'-0" = USGS 8726.5'. COMFORT STATION FINISHED FLOOR ELEVATION: 99'-3 5/8" = USGS 8725.8'. RE: CIVIL
2. CONTRACTOR SHALL BE RESPONSIBLE FOR PROTECTING ALL ELEMENTS/MATERIALS TO REMAIN.
3. EXHIBIT DESIGN NOT SHOWN FOR CLARITY. REFER TO EXHIBIT DESIGN PACKAGE BY OTHERS. CONSTRUCTION, AND INSTALLATION BY OTHERS.
4. ALL EXISTING ELEMENTS ARE SHOWN BASED ON AVAILABLE INFORMATION, NON-DESTRUCTIVE FIELD OBSERVATION AND PREVIOUS DRAWINGS PROVIDED BY GOVERNMENT. CONTRACTOR TO FIELD VERIFY ALL EXISTING CONSTRUCTION AND NOTIFY ARCHITECT/C.O. OF ANY DISCREPANCY BETWEEN CONTRACT DOCUMENTS AND ACTUAL FIELD CONDITIONS AND REQUEST CLARIFICATION PRIOR TO PROCEEDING WITH CONSTRUCTION.
5. REFER TO STRUCTURAL, MECHANICAL, PLUMBING, ELECTRICAL, TECHNOLOGY, FIRE PROTECTION, AND FIRE ALARM DRAWINGS FOR ADDITIONAL SCOPE.
6. ALL CONSTRUCTION ACTIVITIES SHALL BE EXECUTED IN A MANNER WHICH PROTECTS ALL UNDERLYING HISTORIC MATERIALS.
7. ALL WORK TO COMPLY WITH SECRETARY OF INTERIOR STANDARDS FOR REHABILITATION.
8. REFER TO SHEET G005 FOR WALL TYPES.
9. REFER TO WINDOW AND DOOR SCHEDULE FOR SCOPE OF <N> AND REHABILITATION WORK.
10. REFER TO FINISH PLAN AND SCHEDULE FOR ADDITIONAL INFORMATION.
11. VERIFY DIMENSIONS OF ALL EXISTING CONSTRUCTION IN FIELD. EXPECT THAT EXISTING BUILDING ELEMENTS MAY NOT BE PLUMB, LEVEL OR SQUARE.
12. PATCH AND REPAIR ALL FINISHES IMPACTED BY NEW WORK TO MATCH ADJACENT IN MATERIAL, COLOR, TEXTURE AND FINISH. TRANSITION <N> FINISHES TO BLEND AND APPEAR SEAMLESS. PROVIDE SAMPLES TO C.O. FOR APPROVAL.
13. PATCH ALL MISCELLANEOUS HOLES, TO MATCH ADJACENT, UON.
14. PAINT ALL EXPOSED CONDUIT TO MATCH ADJACENT FINISH WITH DIRECT TO METAL PAINT.
15. COORDINATE WATER CLOSET, FLUSH VALVE, AND GRAB BAR INSTALLATION TO ENSURE ADEQUATE SPACE FOR MANUAL OPERATION OF FLUSH VALVE BELOW GRAB BAR WHILE MAINTAINING ALL REQUIRED ABAAS MOUNTING HEIGHTS.
16. PROVIDE ADEQUATE BLOCKING, BACKING OR STRUCTURAL SUPPORT AS REQUIRED TO PROPERLY INSTALLATION OF ALL MOUNTED ASSEMBLIES, INCLUDING ALL ATTACHED EQUIPMENT, ACCESSORIES (GOVERNMENT AND CONTRACTOR FURNISHED ITEMS), PLUMBING FIXTURES, MILLWORK, AND CASEWORK.
17. ALL EXPOSED CASEWORK SURFACES TO BE FINISH FACES.
18. TOILET PARTITIONS SHOWN DASHED FOR CLARITY.

KEYNOTES

06.02	PROVIDE IN-KIND REPAIRS AS NEEDED TO REPAIR CONCEALED WD CORNER MULLION. FINISH TO MATCH <E>
08.02	CAREFULLY REMOVE PANEL INFILL AT INTERIOR TO UNCOVER <E> GLAZING. ASSUME SOME WD REPAIR AT SILL AND FRAME
08.07	PROVIDE <N> 36"X46" WD ACCESS PANEL DOOR FOR BUILT-IN TABLE STORAGE
09.08	PROVIDE PATCH AT REMOVED WINDOW OPENING WITH FINISH TO MATCH <E> ADJACENT WALL FINISH. PROVIDE SMOOTH TRANSITION BETWEEN <E> AND <N> WALL FINISHES.
09.16	PROVIDE T1-11 PATCH WHERE THERMOSTAT REMOVED. PROVIDE SMOOTH TRANSITION BETWEEN <E> AND <N> WALL FINISHES.
10.01	<N> FULLY-RECESSED FIRE EXTINGUISHER CABINET
12.11	<N> SIGN ATTACHED TO GLASS DOOR, RE: EXHIBIT DESIGN
22.02	<N> BI-LEVEL ABAAS DRINKING FOUNTAIN WITH INTEGRAL BOTTLE FILLER AND CANE DETECTION APRON, RE: PLUMB
22.10	<N> WALL ACCESS PANELS FOR DRINKING FOUNTAIN
26.01	<N> POWER ASSISTED DOOR BUTTON LOCATION, FLUSH MOUNTED. INSTALL PER ABAAS, RE: ELEC.
26.06	<N> WALL MOUNTED PROJECTOR SCREEN, RE: TECH. PROVIDE EXTRA BLOCKING IN WALL
26.07	<N> POWER ASSISTED DOOR BUTTON, POLE MOUNTED. INSTALL PER ABAAS, RE: ELEC.
26.09	<N> LIGHTING CONTROL PANEL & THERMOSTAT, RE: ELEC
27.01	<N> WALL MOUNTED CAMERA, RE: TECH
27.02	<N> WIRELESS ACCESS POINT, RE: TECH
28.01	<N> FLUSH-MOUNT FIRE ALARM CONTROL PANEL, RE: FIRE ALARM, ELECTRICAL

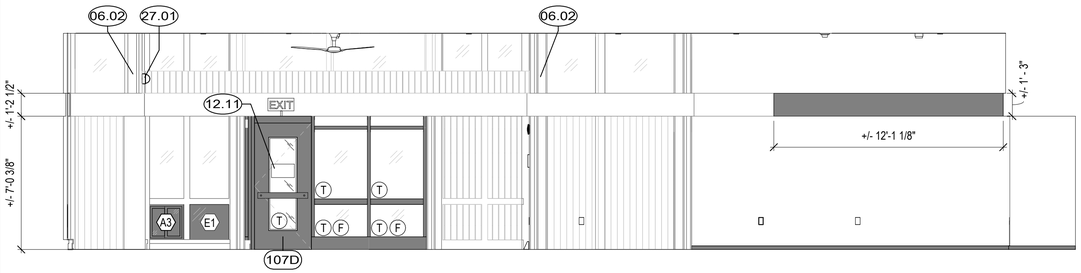

11 A404 EXHIBIT 101/102 - NORTH
SCALE A

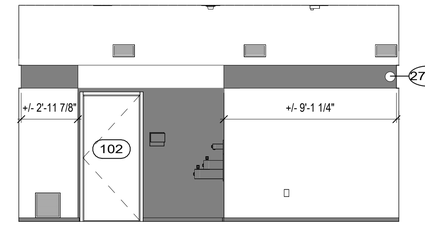

10 A404 EXHIBIT 101/102 - EAST
SCALE A

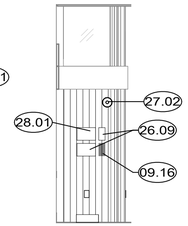

9 A404 EXHIBIT 101/102 - NORTHEAST CORNER
SCALE A

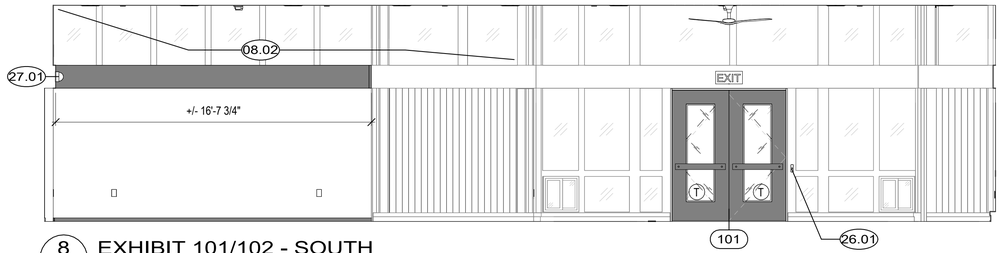

8 A404 EXHIBIT 101/102 - SOUTH
SCALE A

7 A404 EXHIBIT 101/102 - WEST
SCALE A

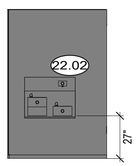

5 A404 EXHIBIT - FOUNTAIN
SCALE A

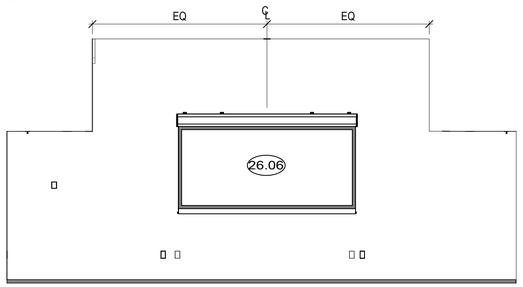

4 A404 AUDITORIUM 103 - SOUTH
SCALE A

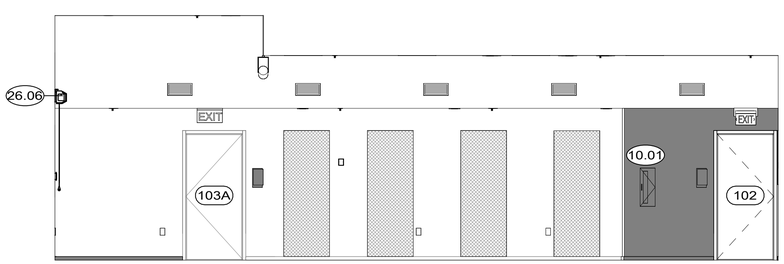

2 A404 AUDITORIUM 103 - WEST
SCALE A

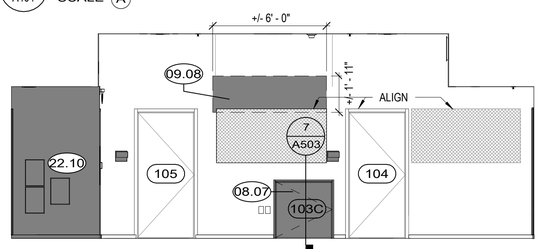

3 A404 AUDITORIUM 103 - NORTH
SCALE A

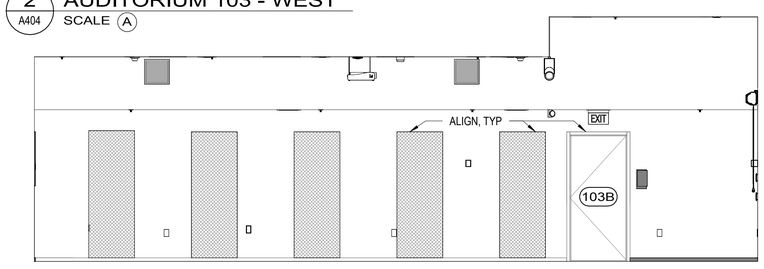

1 A404 AUDITORIUM 103 - EAST
SCALE A

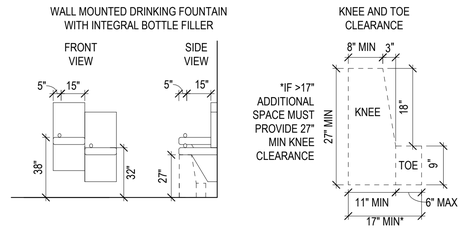

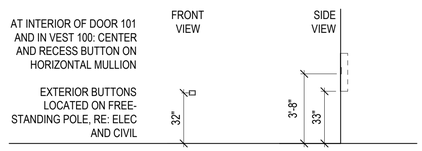

SCALE: A
4 0 4 8
SCALE OF FEET

STATE OF COLORADO
1-16-2026
ELIZABETH McCLURE HALLAS
203482
LICENSED ARCHITECT

AE FIRM PRIME: OTAK, INC. REDMOND, WA SUBCONTRACTOR: ANDERSON HALLAS ARCHITECTS GOLDEN, CO	DESIGNED: CR / VC DRAWN: VC / MS / DM TECH REVIEW: CR / EMH DATE: 01/16/2026	SUB SHEET NO. A404	TITLE OF SHEET INTERIOR ELEVATIONS REHABILITATE KAWUNEECHE VISITOR CENTER ROCKY MOUNTAIN NATIONAL PARK	DRAWING NO. 121 165639 PMIS/PKG NO. 326235 SHEET 76 OF 177

1/20/2026 10:20:05 AM Autodesk Docs://2024-260 NPS ROMO Kawuneeche VC DD-CA wOtak/2024260 NPS ROMO KAWUNEECHE VISITOR CENTER_BIM360.rvt

DOOR SCHEDULE

	SIGNAGE TYPE	SIGNAGE TEXT	FRAME			DOOR PANEL			SIZE			DETAILS			HARDWARE SET	COMMENTS
			FRAME TYPE	<N> OR <E>	FRAME MAT./FIN	PANEL TYPE	<N> OR <E>	PANEL MAT. / FIN	THICKNESS	WIDTH	HEIGHT	HEAD	JAMB	THRESHOLD		
100	-	-	F2	<N>	SCWD/PT	PR A6	<N>	SCWD/GL/STN	1 3/4"	6' - 0"	6' - 11"	4/A502	5/A502	3/A502	A01	C8, C11
101	-	-	F2	<N>	SCWD/PT	PR A6	<N>	SCWD/GL/STN	1 3/4"	6' - 0"	6' - 11"	7/A502	8/A502	6/A502	A02	C8, C11
102	B B	AUDITORIUM ASSISTIVE LISTENING SYSTEM AVAILABLE	F4	<E>	RF/PT	B1	<E>	RF/STN	1 3/4"	3' - 0"	6' - 8"	-	-	-	14	C10
103A	A	EXIT ONLY	F4	<E>	RF/PT	A1	<E>	RF/PT	1 3/4"	3' - 0"	6' - 8"	-	-	-	01	C12
103B	A	EXIT ONLY	F4	<E>	RF/PT	A1	<E>	RF/PT	1 3/4"	3' - 0"	6' - 8"	-	-	-	01	C12
103C	-	-	F2	<N>	SCWD/PT	B1	<N>	SCWD/STN	1 3/4"	3' - 0"	3' - 0"	7/A503	-	7/A503		
104	C	STORAGE	F4	<E>	RF/PT	B1	<E>	RF/STN	1 3/4"	3' - 0"	6' - 8"	-	-	-	12	
105	C	STORAGE	F4	<E>	RF/PT	B1	<E>	RF/STN	1 3/4"	3' - 0"	6' - 8"	-	-	-	12	
106	C	MECHANICAL	F4	<E>	RF/PT	B1	<E>	RF/STN	1 3/4"	3' - 0"	6' - 8"	-	-	-	13	
107B	-	-	F2	<E>	RF/STN	A6	<N>	SCWD/STN	1 3/4"	3' - 0"	6' - 10 3/4"	-	-	-	A03	C1, C11
107D	-		F3	<N>	SCWD/STN	A6	<N>	SCWD/GL/STN	1 3/4"	3' - 0"	6' - 8 1/32"	-	6/A503	-	15	C11
108A	-	-	F2	<E>	RF/STN	B4	<E>	RF/STN	1 3/4"	3' - 0"	6' - 8"	-	-	-	07	C14
108B	-	-	F1	<E>	RF/STN	A4	<E>	RF/STN	1 3/4"	5' - 7"	6' - 8"	-	-	-	04	C2, C9, C11, C14
108C	A	ACCESSIBLE ENTRANCE ON NORTH SIDE OF BUILDING	F2	<E>	RF/STN	A3	<E>	RF/STN	1 3/4"	3' - 0"	6' - 8"	-	-	-	02	C13, C14
109	B	OFFICE	F2	<E>	RF/STN	B2	<E>	RF/STN	1 3/4"	3' - 0"	6' - 8"	-	-	-	08	
110A	B	OFFICE	F2	<E>	RF/STN	B2	<E>	RF/STN	1 3/4"	3' - 0"	6' - 8"	-	-	-	08	
111	B	OFFICE	F2	<E>	RF/STN	B2	<E>	RF/STN	1 3/4"	3' - 0"	6' - 8"	-	-	-	10	
112	B	RESTROOM	F2	<N>	SCWD/STN	B2	<N>	SCWD/STN	1 3/4"	3' - 0"	6' - 8"	3/A503	2/A503	1/A503	11	
113	A	RESTROOM	F2	<N>	SCWD/STN	B2	<N>	SCWD/STN	1 3/4"	3' - 0"	6' - 8"	3/A503	2/A503	1/A503	11	C15
114	C	JANITOR	F2	<E>	RF/STN	B3	<E>	RF/STN	1 3/4"	2' - 6"	6' - 8"	-	-	-	12	
115A	C	MECH. / ELEC.	F4	<N>	SCWD/PT	A1	<N>	SCWD/PT	1 3/4"	3' - 0"	6' - 8"	-	-	4/A503	03	C2
116	B	SERVER	F2	<N>	SCWD/STN	B2	<N>	SCWD/STN	1 3/4"	3' - 0"	6' - 8"	3/A503	5/A503	-	09	
117	B	MAIL	F2	<E>	RF/STN	-	<R>	-	-	3' - 0"	6' - 8"	-	-	-	-	C3
118	B	BREAK ROOM	F2	<E>	RF/STN	-	<R>	-	-	3' - 0"	6' - 8"	-	-	-	-	C3
119	C	STORAGE	F2	<E>	RF/STN	B2	<E>	RF/STN	1 3/4"	3' - 0"	6' - 8"	-	-	-	12	C7
120	B	CONFERENCE	F2	<E>	RF/STN	B2	<E>	RF/STN	1 3/4"	3' - 0"	6' - 8"	-	-	-	08	
121A	B	OFFICE	F2	<E>	RF/STN	B2	<E>	RF/STN	1 3/4"	3' - 0"	6' - 8"	-	-	-	08	
121B	B	OFFICE	F2	<E>	RF/STN	B2	<E>	RF/STN	1 3/4"	3' - 0"	6' - 8"	-	-	-	08	
122	B	OFFICE	F2	<E>	RF/STN	B2	<E>	RF/STN	1 3/4"	3' - 0"	6' - 8"	SIM 3/A503	-	-	08	C10
122A	B	OFFICE	F2	<E>	RF/STN	B2	<E>	RF/STN	1 3/4"	3' - 0"	6' - 8"	-	-	-	08	C5
124	B	OFFICE	F2	<E>	RF/STN	B2	<E>	RF/STN	1 3/4"	3' - 0"	6' - 8"	-	-	-	08	
125	B	OFFICE	F2	<E>	RF/STN	B2	<E>	RF/STN	1 3/4"	3' - 0"	6' - 8"	-	-	-	08	
150	A	WOMEN	F4	<E>	RF/PT	A2	<E>	RF/PT	1 3/4"	3' - 0"	7' - 2"	-	-	-	06	C5
151	A	MEN	F4	<E>	RF/PT	A2	<E>	RF/PT	1 3/4"	3' - 0"	7' - 2"	-	-	-	06	C5
152	C	JANITOR	F4	<E>	RF/PT	A2	<E>	RF/PT	1 3/4"	3' - 0"	7' - 2"	-	-	-	05	
153	C	MECHANICAL	F4	<E>	RF/PT	A2	<E>	RF/PT	1 3/4"	3' - 0"	7' - 2"	-	-	-	05	

DOOR MATERIAL / FINISHES KEY

<E>	EXISTING DOOR
<N>	NEW DOOR
<R>	REMOVED
RF	REFINISH DOOR (PREPARE AND REFINISH)
CO	PROVIDE CASED OPENING
PT	PAINT FINISH
PR	PAIR OF
STN	STAIN FINISH
PF	PRE-FINISHED
GL	WITH FULL / PARTIAL VISION PANEL
SCWD	SOLID CORE WOOD

DOOR COMMENTS KEY

C1. REMOVE INTERIOR PLYWOOD DOOR.
C2. REMOVE <E> DOOR AND FRAME, RAISE DOOR HEADER AT <E> OPENING AND <E> SILL OF OPENING TO ACCOMMODATE RAISED CONCRETE PLATFORM AT EXTERIOR, RE: CIVIL & STRUCT. REMOVE AND REPLACE <E> JACK STUDS AT EA. SIDE AT JAMB AND INSTALL <N> 2X TREATED WD JACK STUDS TO ACCOMMODATE <N> HEADER LOCATION.
C3. REMOVE <E> DOOR LEAF, AND <E> HARDWARE FROM <E> FRAME. REHABILITATE FRAME IN PLACE.
C4. NOT USED
C5. <E> DOOR TO REMAIN, FLIP DOOR SWING. AT COMFORT STATION DOORS ONLY: MAINTAIN <E> KICK PLATE AND PROVIDE <N> KICK PLATE AT OPPOSITE SIDE.
C7. PROVIDE AND INSTALL THRU DOOR LOUVER AT BASE OF DOOR, LOUVER TO MATCH STYLE OF <E> DOOR LOUVERS. RE: MECH FOR LOUVER SIZE.
C8. PROVIDE AND INSTALL (2) AUTOMATED DOOR PUSH BUTTONS AT EA. SIDE OF AUTOMATED DOOR LOCATION, BUTTON TO COMPLY WITH ABAAS AT VESTIBULE DOOR LOCATIONS: EA. BUTTON TO CONTROL WEST LEAF OF DOOR NO 100 AND 101 SIMULTANEOUSLY.
C9. PROVIDE <N> EXTERIOR 1" X 3 1/2" ASH WOOD HORIZONTAL BARS TO MATCH HISTORIC CONDITION AND COMPLY WITH ABAAS. FINISH TO MATCH DOOR.
C10. REINSTALL <E> DOOR AND/OR FRAME IN <N> LOCATION.
C11. REFER TO DETAIL 1/A501 FOR TYPICAL EXTERIOR DOOR PULL.
C12. PROVIDE EXIT ONLY SIGNAGE ON EXTERIOR SIDE OF DOOR.
C13. PROVIDE SIGNAGE DIRECTING TO NEAREST ACCESSIBLE ENTRANCE ON EXTERIOR SIDE OF THE DOOR.
C14. PROVIDE KEYPAD AND ELECTRIC STRIKE
C15. PROVIDE AND INSTALL (2) AUTOMATED DOOR PUSH BUTTONS AT EA SIDE OF DOOR LOCATION WITH OCCUPANCY COLOR ILLUMINATION. BUTTON TO COMPLY WITH ABAAS FOR MOUNTING LOCATION.

GENERAL NOTES

1. WHERE POSSIBLE, NEW HARDWARE SHALL USE EXISTING PENETRATIONS.
2. WHERE HARDWARE IS REMOVED ON DOORS AND FRAMES & EXISTING PENETRATIONS NOT REUSED FOR NEW HARDWARE, CONTRACTOR SHALL PLUG ABANDONED HOLES, PREP & REFINISH.
3. PROTECT ALL EXISTING GLAZING AND SURROUNDING FINISH SURFACES TO REMAIN IN-SITU.
4. ALL DOORS TO RECEIVE NEW ABBAS COMPLIANT HARDWARE. REFER TO SPECIFICATIONS FOR ADDITIONAL INFORMATION.
5. ALL EXISTING PAINTED WOOD DOORS AND FRAMES TO BE REFINISHED AND PAINTED. ALL EXISTING STAINED WOOD DOORS AND FRAMES TO BE REFINISHED AND STAINED.
6. REFER TO SPECIFICATIONS FOR KNOWN HAZARDOUS MATERIALS & REMOVAL.
7. REFER TO SHEET G004 FOR ALL REQUIRED ACCESSIBLE DOOR CLEARANCES.
8. FIELD VERIFY ALL DOOR TYPES & DIMENSIONS PRIOR TO COMMENCING WORK.
9. PROVIDE DOOR STOPS AT ALL INTERIOR DOORS, REFER TO DOOR SCHEDULE AND SPECIFICATIONS FOR TYPE.
10. EXTERIOR DOORS SHALL BE FULLY INSULATED WITH WEATHER STRIPPING, DOOR SWEEPS, AND RAIN DRIPS.
11. REFER TO SPECIFICATIONS FOR DOOR HARDWARE SETS.
12. LOCKSETS SHALL BE OF TYPE AND MFG THAT WILL RECEIVE INTERCHANGEABLE CORES THAT ARE COMPATIBLE WITH SPECIFIED CURRENT LOCKING SYSTEM; CORES WILL BE KEYED BY LOCKSMITH AT CONTRACTOR EXPENSE.
13. ALL NEW GLAZING SHALL BE TEMPERED AT AREAS CONSIDERED HAZARDOUS LOCATIONS INCLUDING BUT NOT LIMITED TO ALL GLAZING IN DOORS AND WINDOWS WITHIN 24" OF DOORS (IN SAME PLANE AS DOORS).

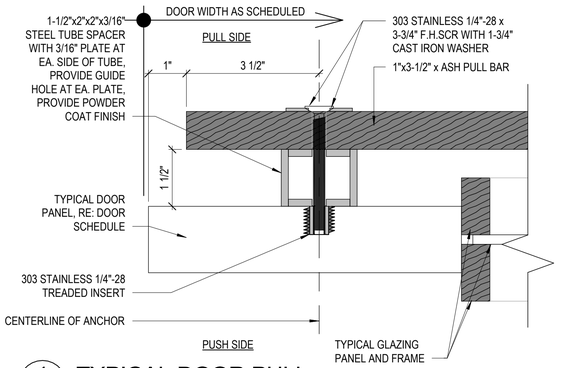

1 A501 TYPICAL DOOR PULL
SCALE A

EXTERIOR DOOR PANEL ELEVATIONS

EXTERIOR DOOR ELEVATION SHOWN

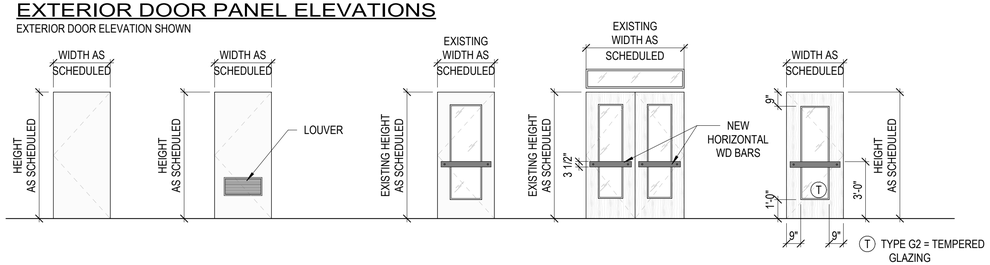

'A1' HOLLOW METAL
'A2' HOLLOW METAL WITH LOUVER
'A3' SOLID WD CORE FULL VISION PANEL
'A4' SOLID WD CORE FULL VISION DOUBLE PANEL WITH FIXED TRANSOM
'A6' SOLID WD CORE FULL VISION PANEL

SIGNAGE TYPE ELEVATIONS

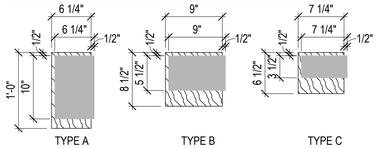

TYPE A TYPE B TYPE C

AT INTERIOR LOCATIONS: 1/8" THICK MATTE GRAY ACRYLIC PANEL WITH OFFSET 1/4" WD BACKER, FINISH TO MATCH BASEBOARD TRIM. MATCH FONT OF EXHIBIT SIGNAGE. RAISED LETTERING, SPACING, SYMBOLS, & BRAILLE PER ABAAS. RE: SPECS.

AT EXTERIOR LOCATIONS: 1/8" THICK MATTE GRAY ACRYLIC PANEL WITH OFFSET 1/4" WD BACKER WITH DARK BROWN NON-GLARE FINISH. MATCH FONT OF EXHIBIT SIGNAGE. RAISED LETTERING, SPACING, SYMBOLS, & BRAILLE PER ABAAS. RE: SPECS.

REFER TO SHEET 2/G501 FOR SIGNAGE MOUNTING HEIGHT

INTERIOR DOOR PANEL ELEVATIONS

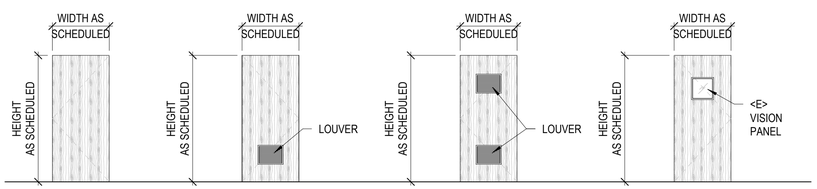

'B1' SOLID WD CORE
'B2' SOLID WD CORE WITH LOUVER
'B3' SOLID WD CORE WITH HIGH AND LOW LOUVER
'B4' SOLID WD CORE WITH LOUVER

DOOR FRAME ELEVATIONS

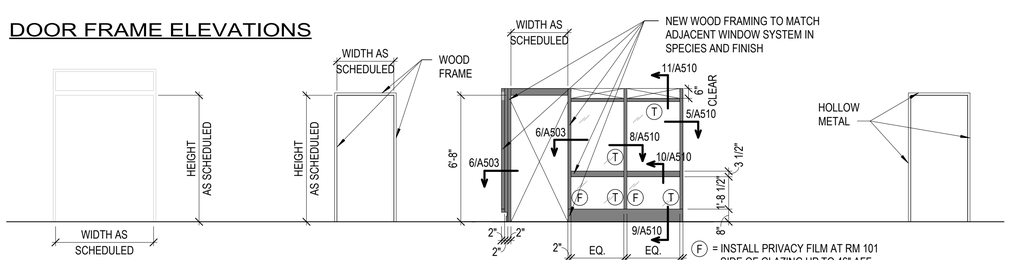

'F1' SOLID WD FRAME 2"X1" TRIM, TYP EACH SIDE OF DOOR
'F2' SOLID WD FRAME 2"X1" TRIM, TYP EACH SIDE OF DOOR
'F3' SOLID WD FRAME
'F4' HOLLOW METAL FRAME 2"X1" TRIM, TYP EACH SIDE OF DOOR

KEYPLAN

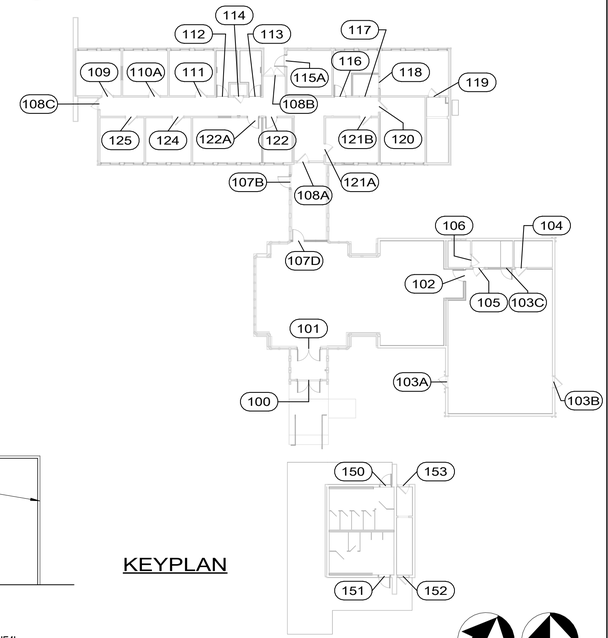

SCALE: A 8 0 8 16 SCALE OF FEET
TRUE PLAN

STATE OF COLORADO 1-16-2026 ELIZABETH McCLURE HALLAS 203482 LICENSED ARCHITECT

AE FIRM PRIME: OTAK, INC. REDMOND, WA SUBCONTRACTOR: ANDERSON HALLAS ARCHITECTS GOLDEN, CO	DESIGNED: CR / VC DRAWN: VC / MS / DM TECH REVIEW: CR / EMH DATE: 01/16/2026	SUB SHEET NO. A501	TITLE OF SHEET DOOR SCHEDULE REHABILITATE KAWUNEECHE VISITOR CENTER ROCKY MOUNTAIN NATIONAL PARK	DRAWING NO. 121 165639 PMIS/PKG NO. 326235 SHEET 77 OF 177

1/20/2026 10:20:06 AM Autodesk Docs://2024-260 NPS ROMO Kawuneeche VC DD-CA wOtak/2024260 NPS ROMO KAWUNEECHE VISITOR CENTER_BIM360.rvt

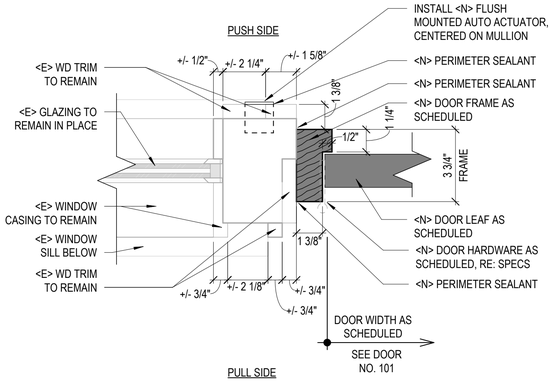

8 A502 PLAN DETAIL AT DOOR JAMB AT DOOR NO. 101
SCALE B

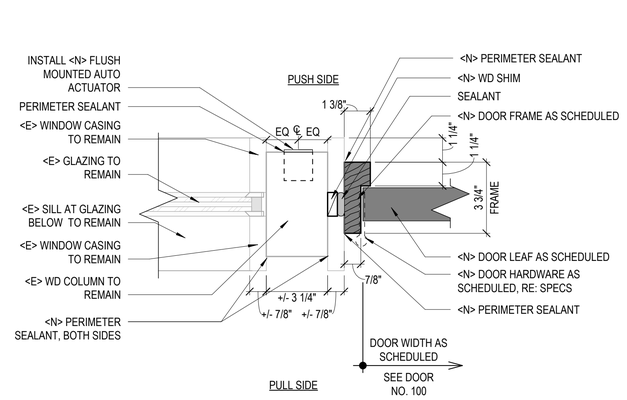

5 A502 PLAN DETAIL AT DOOR JAMB AT DOOR NO. 100
SCALE B

KEYNOTES

03.03 <N> CONCRETE SLAB INFILL, PROVIDE SMOOTH FINISH W/ <E> ADJACENT. RE: STRUC DETAIL 1/S001
08.08 <N> FLOOR RECESSED DOOR CLOSER
09.15 <N> RECESSED FLOOR MATS, RE: STRUC
26.01 <N> POWER ASSISTED DOOR BUTTON LOCATION, FLUSH MOUNTED. INSTALL PER ABAAS, RE: ELEC.
26.07 <N> POWER ASSISTED DOOR BUTTON, POLE MOUNTED. INSTALL PER ABAAS, RE: ELEC.

2 A502 EXTERIOR VESTIBULE - DEMO
N.T.S.

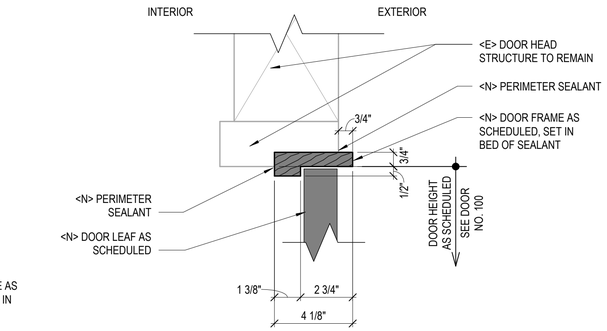

7 A502 SECTION DETAIL AT DOOR HEAD AT DOOR NO. 101
SCALE B

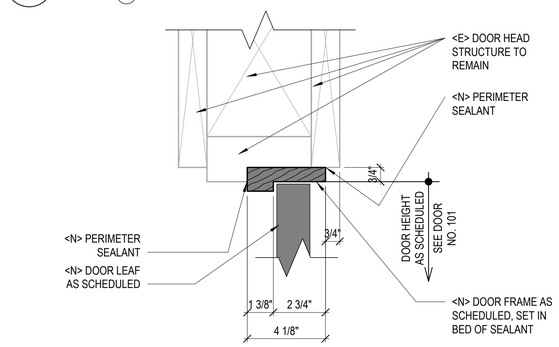

4 A502 SECTION DETAIL AT DOOR HEAD AT DOOR NO. 100
SCALE B

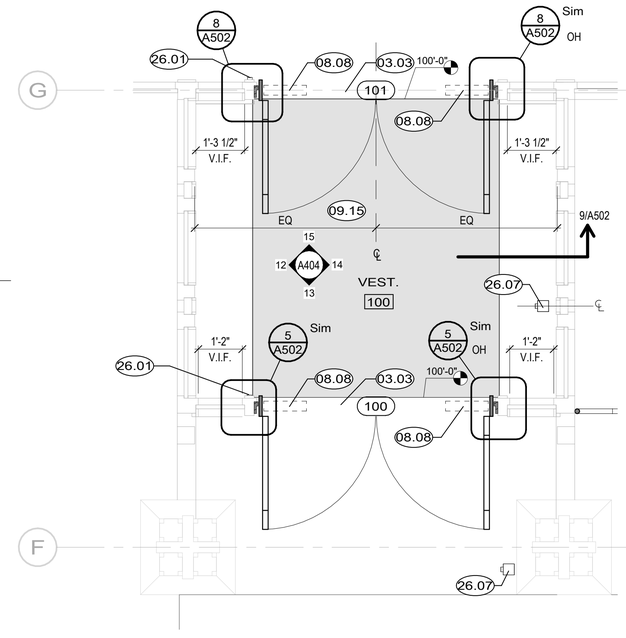

1 A502 ENLARGED PLAN - VESTIBULE
SCALE A

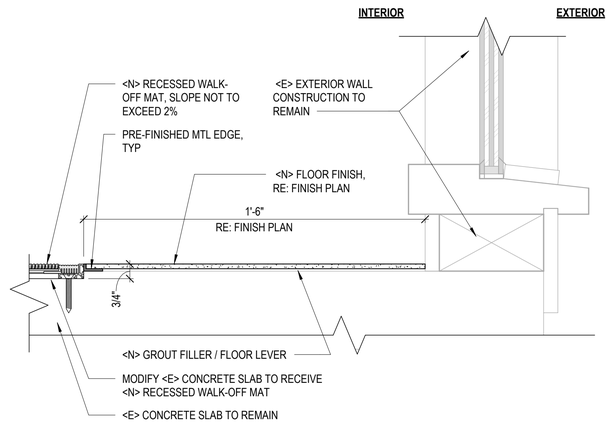

9 A502 CROSS SECTION DETAIL AT WALK-OFF MATT
SCALE B

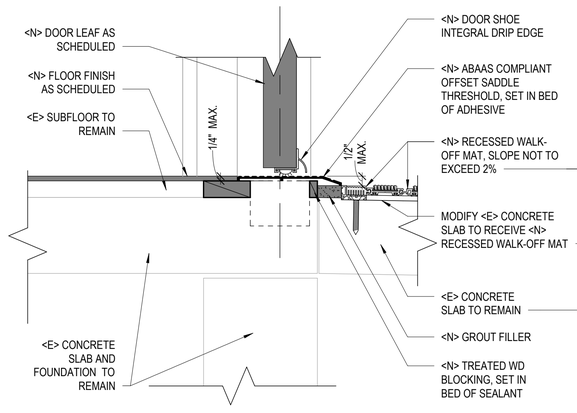

6 A502 SECTION DETAIL AT DOOR SILL AT DOOR 101
SCALE B

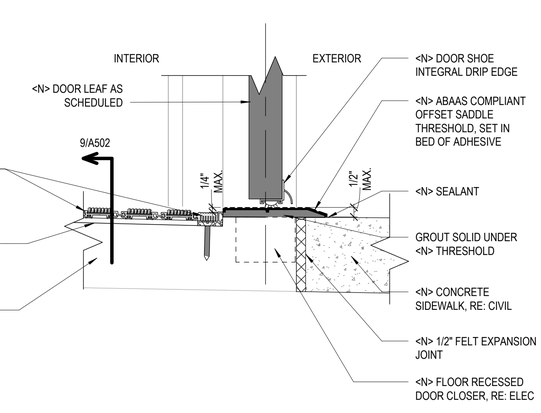

3 A502 SECTION DETAIL AT DOOR SILL AT DOOR 100
SCALE B

SCALE: B 6 3 0 6 SCALE OF INCHES
SCALE: A 2 0 2 4 SCALE OF FEET
TRUE PLAN

STATE OF COLORADO 1-16-2026 ELIZABETH McCLURE HALLAS 203482 LICENSED ARCHITECT

AE FIRM PRIME: OTAK, INC. REDMOND, WA SUBCONTRACTOR: ANDERSON HALLAS ARCHITECTS GOLDEN, CO	DESIGNED: CR / VC DRAWN: VC / MS / DM TECH REVIEW: CR / EMH DATE: 01/16/2026	SUB SHEET NO. A502	TITLE OF SHEET DOOR DETAILS AND ENLARGED PLAN REHABILITATE KAWUNEECHE VISITOR CENTER ROCKY MOUNTAIN NATIONAL PARK	DRAWING NO. 121 165639 PMIS/PKG NO. 326235 SHEET 78 OF 177

1/20/2026 10:20:07 AM Autodesk Docs://2024-260 NPS ROMO Kawuneeche VC DD-CA wOtak/2024260 NPS ROMO KAWUNEECHE VISITOR CENTER_BIM360.rvt

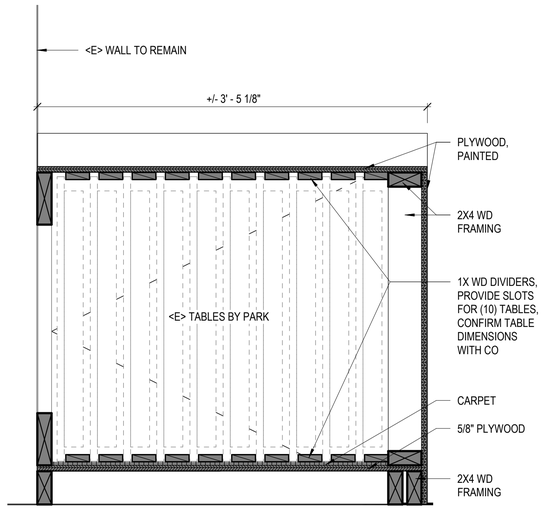

8 A503 SECTION DETAIL - TABLE STORAGE
SCALE (A)

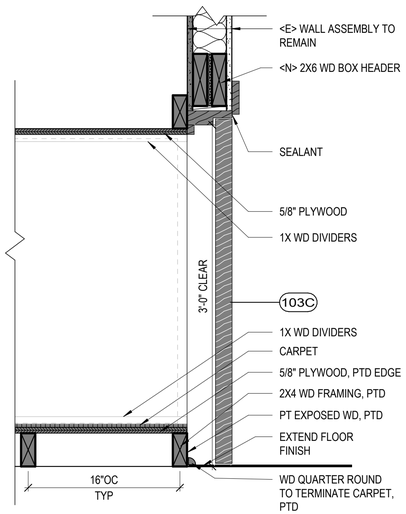

7 A503 SECTION DETAIL- TABLE STORAGE
SCALE (A)

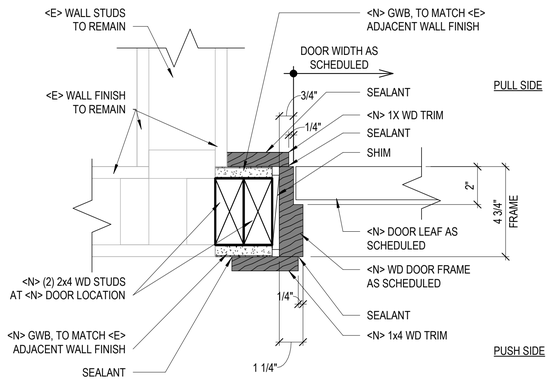

PLAN DETAIL AT DOOR JAMB AT DOOR NO. 116
5 A503 SCALE (A)

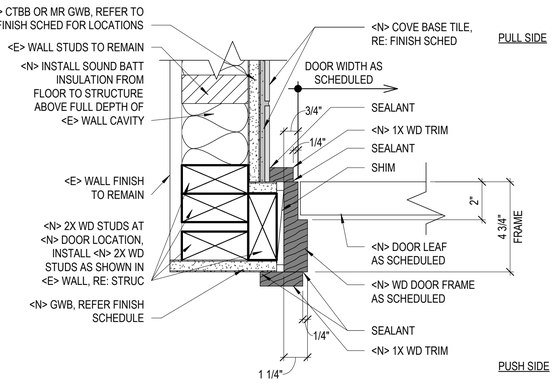

PLAN DETAIL AT DOOR JAMB AT DOOR NO. 113, SIM AT DOOR NO. 112
2 A503 SCALE (A)

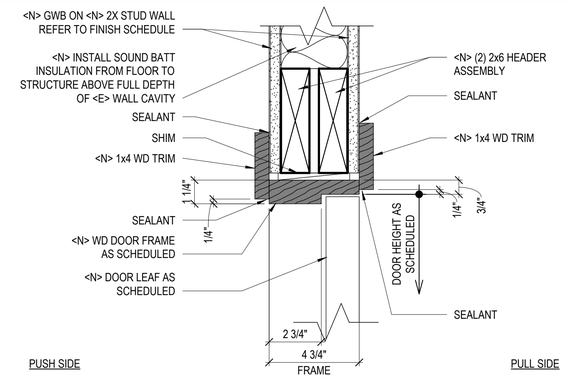

3 A503 SECTION DETAIL AT DOOR HEAD AT DOOR NO. 112, 113, 116
SCALE (A)

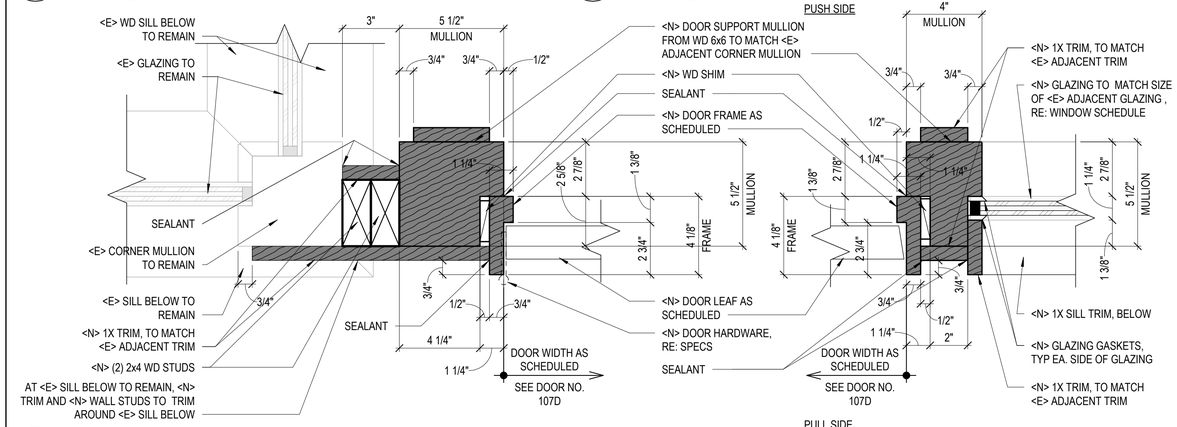

6 A503 PLAN DETAIL AT DOOR JAMB NO. 107D
SCALE (A)

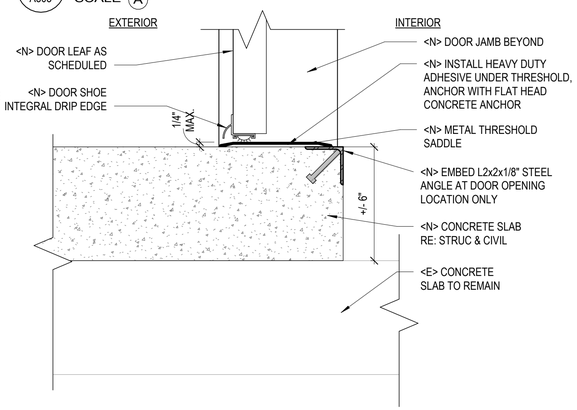

4 A503 SECTION DETAIL AT DOOR SILL AT DOOR 115A
SCALE (A)

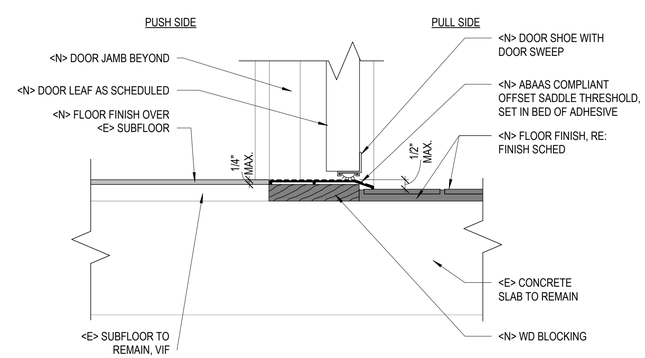

1 A503 SECTION DETAIL AT DOOR SILL AT DOOR 112, 113
SCALE (A)

SCALE: (A) 6 3 0 6
SCALE OF INCHES

STATE OF COLORADO
ELIZABETH McCLURE HALLAS
203482
LICENSED ARCHITECT
1/16/2026

AE FIRM PRIME: OTAK, INC. REDMOND, WA SUBCONTRACTOR: ANDERSON HALLAS ARCHITECTS GOLDEN, CO	DESIGNED: CR / VC DRAWN: VC / MS / DM TECH REVIEW: CR / EMH DATE: 01/16/2026	SUB SHEET NO. A503	TITLE OF SHEET DOOR DETAILS REHABILITATE KAWUNEECHE VISITOR CENTER ROCKY MOUNTAIN NATIONAL PARK	DRAWING NO. 121 165639 PMIS/PKG NO. 326235 SHEET 79 OF 177

1/20/2026 10:20:08 AM Autodesk Docs://2024-260 NPS ROMO Kawuneeche VC DD-CA wOtak/2024260 NPS ROMO KAWUNEECHE VISITOR CENTER_BIM360.rvt

WINDOW SCHEDULE

TAG	NEW / EXISTING	WINDOW TYPE	WIDTH	HEIGHT	HEAD HEIGHT	GLASS TYPE (SEE SPECS)	DETAILS HEAD	DETAILS JAMB	DETAILS SILL	COMMENTS
A1	NEW	A	5'-0"	4'-0"	7'-1"	G3	2/A511	3, 4/A511	1/A511	
A2	NEW	A	5'-0"	2'-0"	7'-1"	G3	2/A511	3, 4/A511	1/A511	PROVIDE PRIVACY FILM
A3	NEW	A	1'-10 1/2"	1'-10 1/2"	2'-4 1/2"	G3	4/A510	1, 2/A510	3/A510	REMOVE <E> WOOD INFILL AND REPLACE WITH NEW SLIDING WINDOW TO MATCH <E> ADJACENT. PROVIDE <N> UV FILM
E1	NEW	C	1'-10 1/2"	1'-10 1/2"	2'-4 1/2"	G3	7/A510	1/A510	6/A510	REMOVE <E> WOOD INFILL AND REPLACE WITH <N> DOUBLE PANE GLAZING TO MATCH <E> ADJACENT.PROVIDE <N> UV FILM

GENERAL NOTES

1. FIELD VERIFY ALL WINDOW TYPES & DIMENSIONS PRIOR TO COMMENCING WORK.
2. REMOVE ALL WINDOW COVERINGS AND ASSOCIATED HARDWARE AT INTERIOR.
3. <E> STOREFRONT GLAZING AT VISITOR CENTER NOT SCHEDULED IS TO REMAIN (PROTECT IN PLACE). PROVIDE TRANSPARENT UV FILM TO ALL STOREFRONT GLAZING AT VISITOR CENTER.
4. KEEP <E> ORIGINAL GLASS AT ALL <E> WINDOWS TO REMAIN.
5. PROVIDE NEW PERIMETER SEALANT AT WINDOWS TO REMAIN.
6. REMOVE PAINT FROM <E> GLAZING.
7. REMOVE, CLEAN, OIL AND REINSTALL ALL <E> HARDWARE TO REMAIN.
8. A1 WINDOWS IN ADMIN WING TO RECEIVE MANUAL SHADES, SERVER ROOM AND CONFERENCE ROOM WINDOW SHADES ARE TO BE BLACK-OUT.
9. REMOVE AND REINSTALL INTERIOR WINDOW TRIM WHERE POSSIBLE.
10. REFER TO G005 FOR ENERGY REQUIREMENTS.
11. ALL NEW GLAZING SHALL BE TEMPERED AT AREAS CONSIDERED HAZARDOUS LOCATIONS INCLUDING BUT NOT LIMITED TO ALL GLAZING IN DOORS AND WINDOWS WITHIN 24" OF DOORS (IN SAME PLANE AS DOORS).

OPTIONS

OPTION 01: PROVIDE <N> CUSTOM STEEL WINDOWS FOR WINDOW TYPE A1 AND A2 IN ALL LOCATIONS INDICATED. WINDOWS SHALL BE THERMALLY BROKEN, DOUBLE PANE WITH LOW-E COATING. WINDOW OPERATION SHALL MATCH <E>. EQUALLY SPLIT WITH SLIDER, INCLUDING EXTERIOR SCREEN. SASH PROFILES TO MATCH <E> AND APPROVED BY C.O. THROUGH SHOP DRAWINGS AND MOCK-UP.

WINDOW TYPES

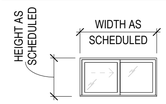

TYPE A

THERMALLY BROKEN ALUMINUM FRAME DOUBLE PANE GLAZING SIDING WINDOW

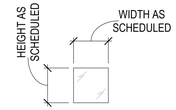

TYPE C

DOUBLE PANE GLAZING ONLY (UTILIZES EXISTING FRAME)

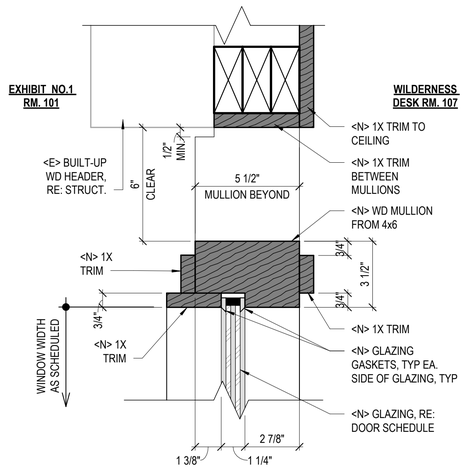

11 A510 SECTION DETAIL AT STOREFRONT GLAZING AT MULLION HEAD SCHEDULE REF A501
SCALE A

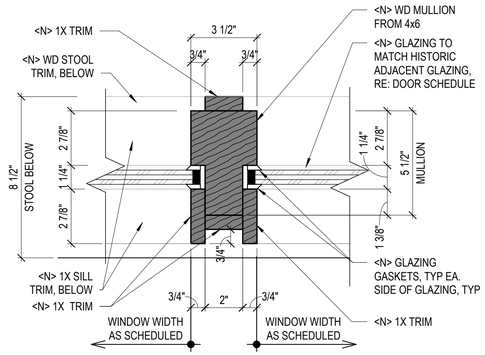

8 A510 PLAN DETAIL AT STOREFRONT GLAZING AT CENTER MULLION JAMB SCHEDULE REF A501
SCALE A

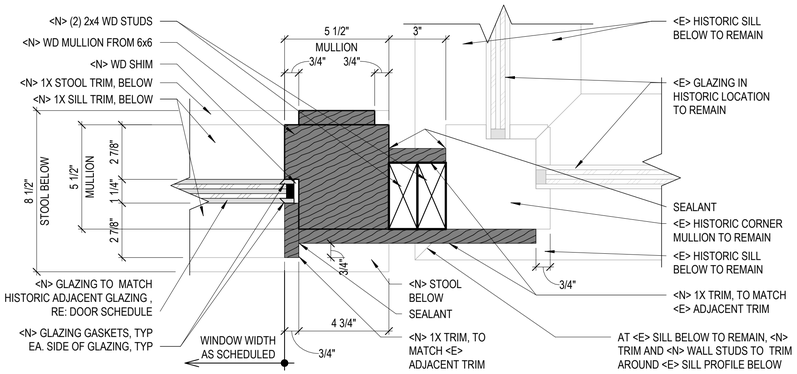

5 A510 PLAN DETAIL AT STOREFRONT GLAZING MULLION JAMB SCHEDULE REF A501
SCALE A

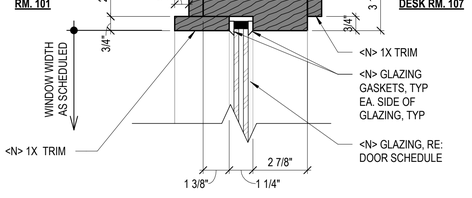

10 A510 SECTION DETAIL AT STOREFRONT GLAZING AT CENTER MULLION JAMB SCHEDULE REF A501
SCALE A

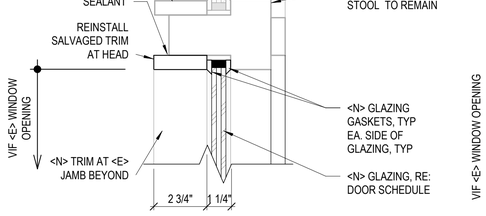

7 A510 SECTION DETAIL - E1 WINDOW HEAD
SCALE A

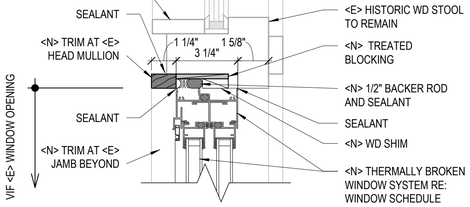

4 A510 SECTION DETAIL - A3 WINDOW HEAD
SCALE A

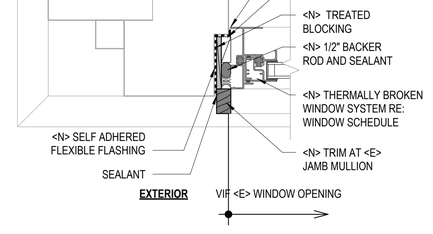

2 A510 SECTION DETAIL - A3 WINDOW JAMB
SCALE A

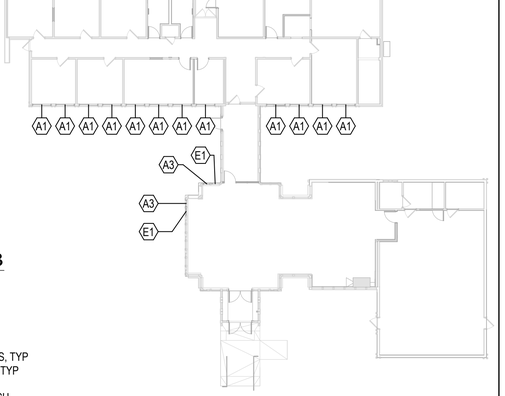

KEYPLAN

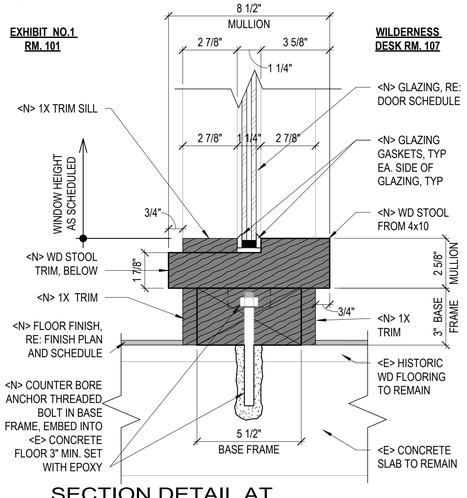

9 A510 SECTION DETAIL AT STOREFRONT GLAZING SILL SCHEDULE REF A501
SCALE A

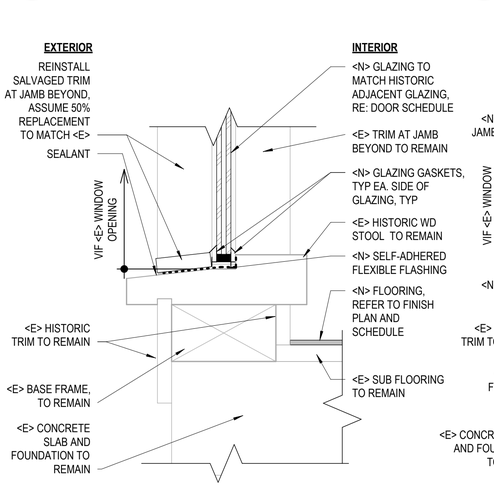

6 A510 SECTION DETAIL - E1 WINDOW SILL
SCALE A

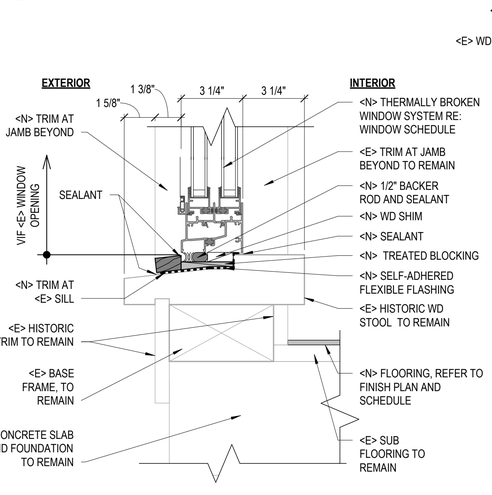

3 A510 SECTION DETAIL - A3 WINDOW SILL
SCALE A

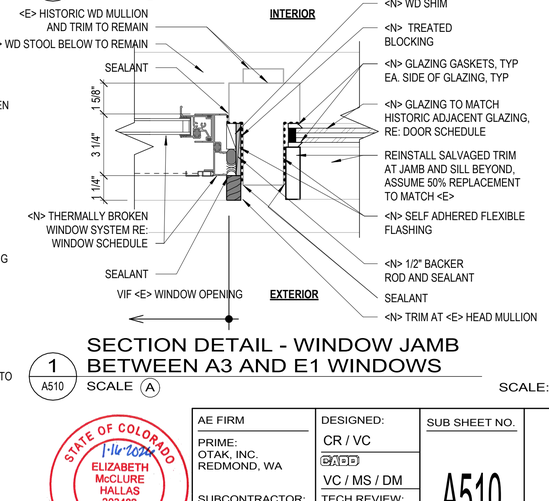

1 A510 SECTION DETAIL - WINDOW JAMB BETWEEN A3 AND E1 WINDOWS
SCALE A

SCALE: A
6 3 0 6
SCALE OF INCHES

TRUE PLAN

STATE OF COLORADO
1-16-2026
ELIZABETH McCLURE HALLAS
203482
LICENSED ARCHITECT

AE FIRM PRIME: OTAK, INC. REDMOND, WA SUBCONTRACTOR: ANDERSON HALLAS ARCHITECTS GOLDEN, CO	DESIGNED: CR / VC DRAWN: VC / MS / DM TECH REVIEW: CR / EMH DATE: 01/16/2026	SUB SHEET NO. A510	TITLE OF SHEET WINDOW SCHEDULE REHABILITATE KAWUNEECHE VISITOR CENTER ROCKY MOUNTAIN NATIONAL PARK	DRAWING NO. 121 165639 PMIS/PKG NO. 326235 SHEET 80 OF 177

1/20/2026 10:20:10 AM Autodesk Docs://2024-260 NPS ROMO Kawuneeche VC DD-CA wOtak/2024260 NPS ROMO KAWUNEECHE VISITOR CENTER_BIM360.rvt

OPTIONS

OPTION 01: PROVIDE <N> CUSTOM STEEL WINDOWS FOR WINDOW TYPE A1 AND A2 IN ALL LOCATIONS INDICATED. WINDOWS SHALL BE THERMALLY BROKEN, DOUBLE PANE WITH LOW-E COATING. WINDOW OPERATION SHALL MATCH <E>: EQUALLY SPLIT WITH SLIDER, INCLUDING EXTERIOR SCREEN. SASH PROFILES TO MATCH <E> AND APPROVED BY C.O. THROUGH SHOP DRAWINGS AND MOCK-UP.

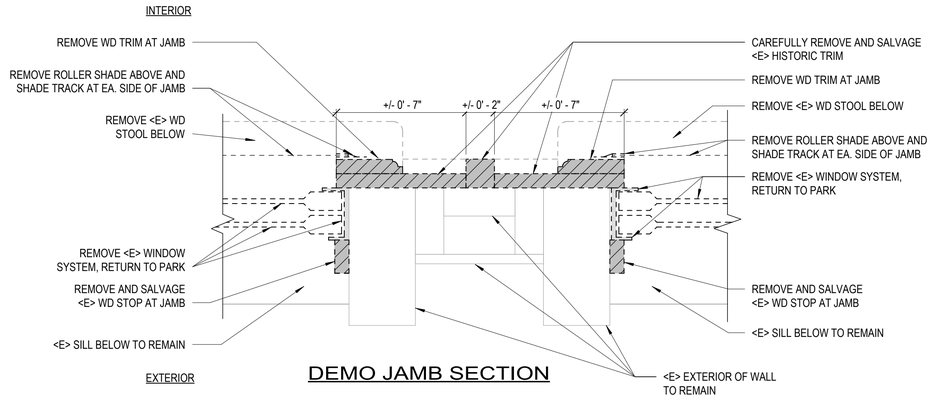

DEMO JAMB SECTION

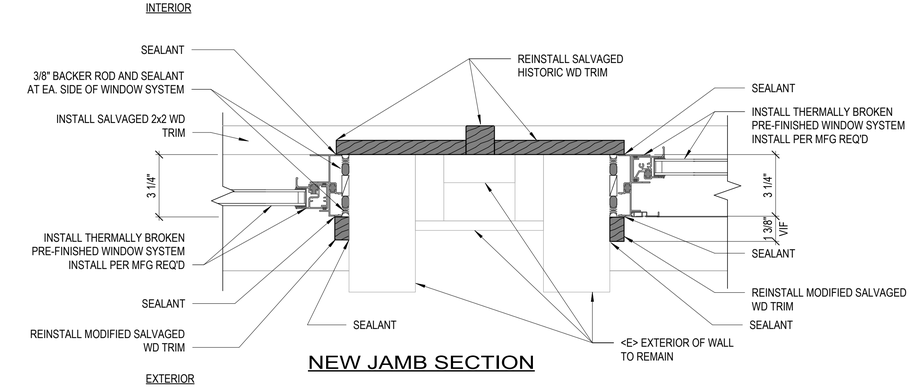

NEW JAMB SECTION

4 / A511 SECTION DETAIL AT TYPE A1 AND A2 WINDOW AT JAMB
SCALE (A)

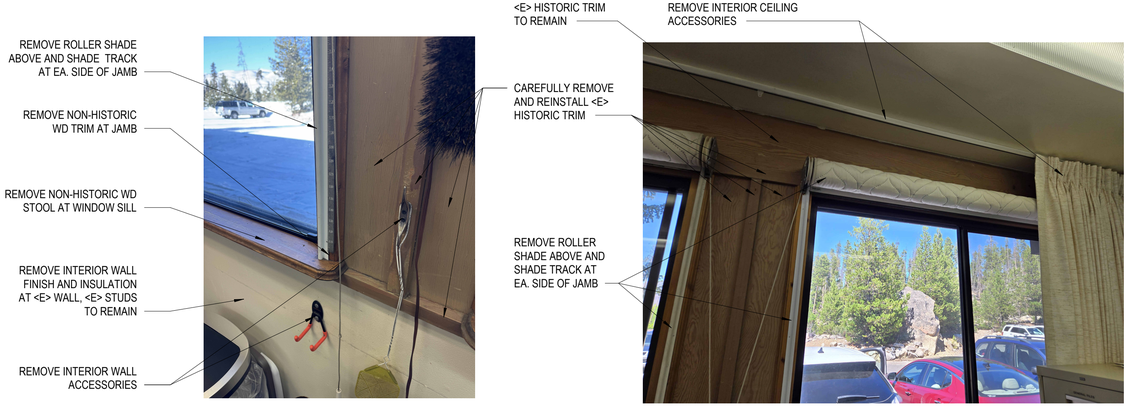

3 / A511 PHOTO - WINDOW INTERIOR
N.T.S.

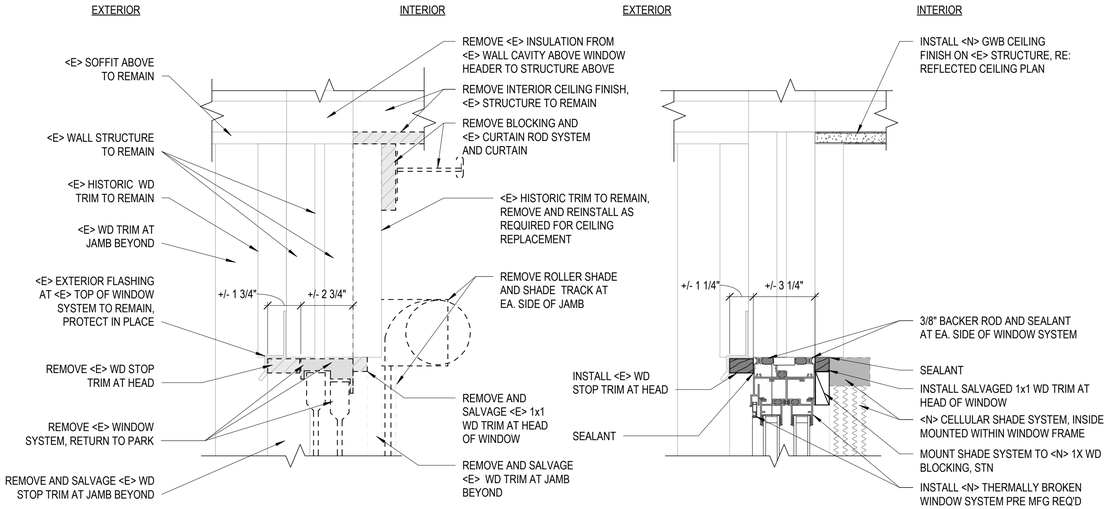

DEMO HEAD SECTION

NEW HEAD SECTION

2 / A511 SECTION DETAIL AT TYPE A1 AND A2 WINDOW AT HEAD
SCALE (A)

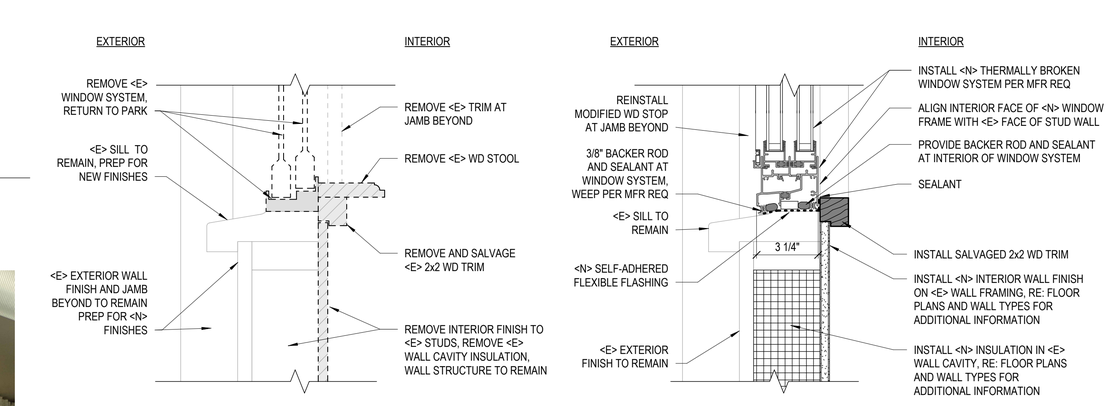

DEMO SILL SECTION

NEW SILL SECTION

1 / A511 SECTION DETAIL AT TYPE A1 AND A2 WINDOW AT SILL
SCALE (A)

SCALE: (A) 12 6 0 12
SCALE OF INCHES

STATE OF COLORADO
1-16-2026
ELIZABETH McCLURE HALLAS
203482
LICENSED ARCHITECT

AE FIRM PRIME: OTAK, INC. REDMOND, WA SUBCONTRACTOR: ANDERSON HALLAS ARCHITECTS GOLDEN, CO	DESIGNED: CR / VC DRAWN: VC / MS / DM TECH REVIEW: CR / EMH DATE: 01/16/2026	SUB SHEET NO. A511	TITLE OF SHEET WINDOW DETAILS REHABILITATE KAWUNEECHE VISITOR CENTER ROCKY MOUNTAIN NATIONAL PARK	DRAWING NO. 121 165639 PMIS/PKG NO. 326235 SHEET 81 OF 177

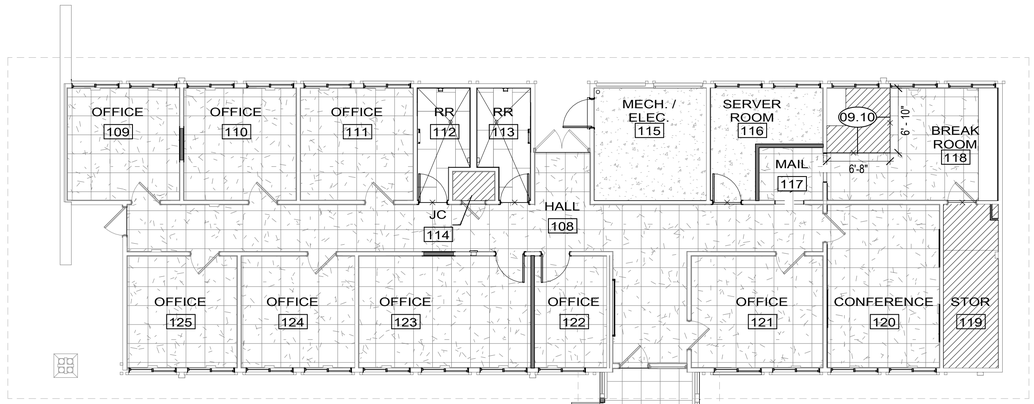

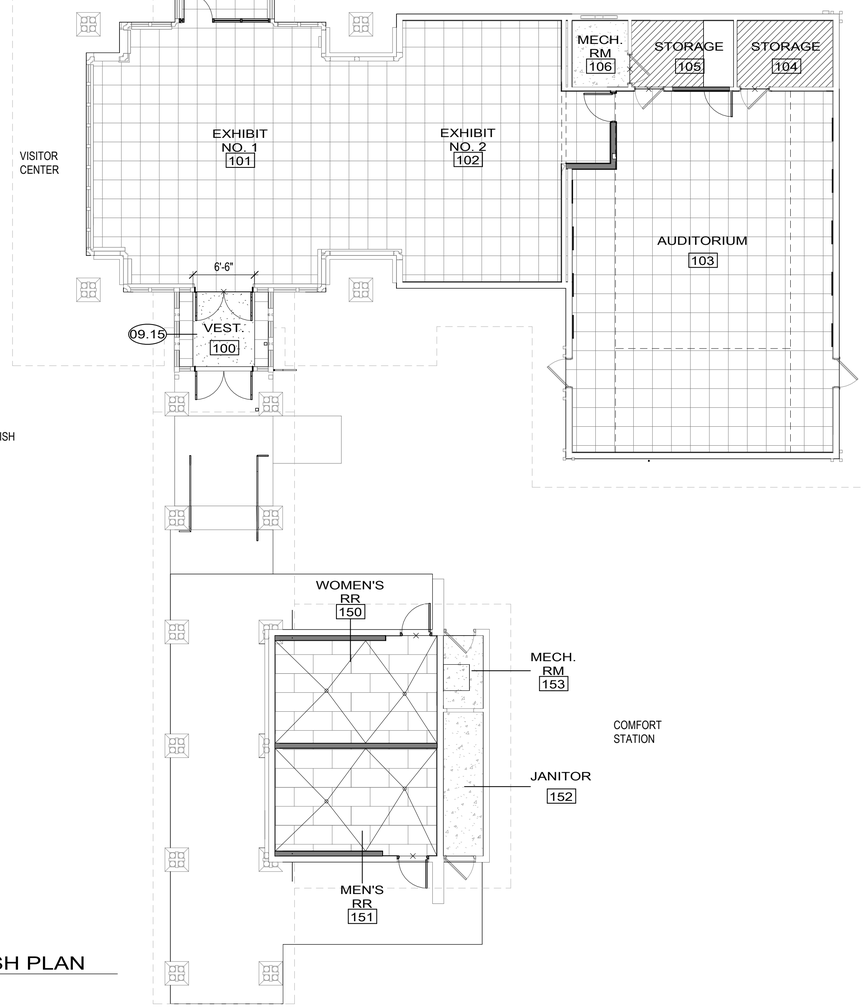

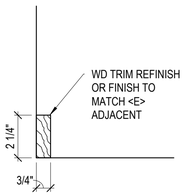

BASE TYPE A

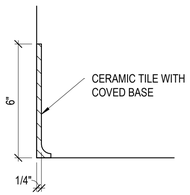

BASE TYPE B

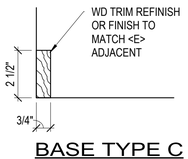

BASE TYPE C

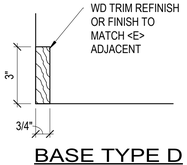

BASE TYPE D

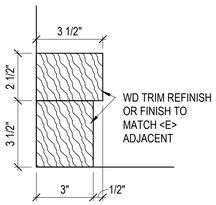

BASE TYPE E

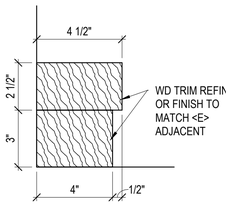

BASE TYPE F

RE: FINISH SCHEDULE FOR WALL AND FLOOR FINISH, TYP

1 A520 OVERALL FINISH PLAN
SCALE (A)

KEYNOTES

09.10 PROVIDE METAL TRANSITION STRIP AT FLOORING CHANGES
09.15 <N> RECESSED FLOOR MATS, RE: STRUC

GENERAL NOTES

1. REPAIR / REPLACE ALL FINISHES AFFECTED BY DEMOLITION AND CONSTRUCTION WORK IN-KIND TO MATCH ADJACENT, UNO.
2. PROVIDE CTBB BEHIND WALL TILE, MATCH THICKNESS OF CTBB TO GWB.
3. PROVIDE MOLD & MOISTURE RESISTANT GWB AT ALL "WET" AREAS. REFER TO G005 FOR WALL TYPES AND SPECIFICATIONS.
4. ABAAS COMPLIANT MTL TRANSITIONS BETWEEN ALL FLOORING CHANGES. ALL FLOOR TRANSITIONS TO ALIGN WITH CENTER OF DOOR IN CLOSED POSITION.
5. ALL EXPOSED GYPSUM BOARD TO BE PAINTED.
6. REFER TO SPECIFICATIONS FOR PAINT SCHEDULE.
7. REFER TO DOOR SCHEDULE FOR DOOR FINISHES.
8. ALL <E> FLOOR FINISH IS TO BE REMOVED TO CONCRETE SLAB ON GRADE AND PREPARED FOR <N> FINISHES AS INDICATED ON SCHEDULE.
9. ALL EXPOSED GRILLES, VENT COVERS, ACCESS PANELS, ETC TO BE FIELD PAINTED TO BE SAME COLOR AS SURROUNDING WALL.
10. INSTALL WALL COVERING TO FINISHED FLOOR PRIOR TO WALL BASE INSTALLATION.
11. TYPICAL THROUGHOUT: NO WALL TILE CUTS TO BE LESS THAN 2" WIDE. CONFIRM/ COORDINATE WITH CONTRACTING OFFICER WHEN SMALL CUTS COULD OCCUR PRIOR TO INSTALLATION.
12. ALL EXPOSED FINISHED WOOD WORK (BOARD CEILING, WOOD JOISTS AND COLUMNS, TRIM, ETC.) SHALL BE REFINISHED TO MATCH EXISTING COLOR.
13. ALL SWITCH PLATES AND RECEPTACLE PLATES TO BE BRUSHED BRASS FINISH, RE: ELEC.

FLOOR FINISH KEY

CN-1 <E> CONC, SEAL (DEEP CLEAN PRIOR TO APPLYING SEALANT)
CPT-1 <N> CARPET TILES
CPT-2 <N> CARPET TILES
LCT-1 <N> LINOLEUM FLOORING
CT-1 <N> CERAMIC TILE
FLOORING TRANSITION

WALL FINISH KEY

GWB	GYPSUM WALL BOARD (MOISTURE RESISTANT AT WET AREAS), PAINTED. BOD: PPG PAINTS "1024-1 OFF WHITE, EGGSHELL"
GWB-2	<E> GYPSUM WALL BOARD, PAINTED. BOD: PPG PAINTS "1024-1 OFF WHITE, EGGSHELL"
CWT	CERAMIC WALL TILE TO 6'-0" AFF UON ON INTERIOR ELEVATIONS (ALLOW FOR 10% ACCENT TILE) WITH CTBB AND GWB ABOVE
STF	STOREFRONT
WD	T1-11

WALL BASE KEY

RB	RUBBER BASE
TYPE _	(REFER TO TRIM TYPES ON THIS SHEET)

CEILING FINISH KEY

ACT-1	<N> ACOUSTIC CEILING TILES
OPEN	OPEN TO STRUCTURE
PT-1	GYPSUM BOARD CEILING, PAINTED. BOD: PPG PAINTS "1025-1 COMMERCIAL WHITE, FLAT"
WD-1	<E> 1X6 BOARD CEILING - PREPARE AND REFINISH
WD-2	<N> 1X6 BOARD CEILING TO MATCH <E> ADJACENT

EXTERIOR FINISHES

AREA	MATERIAL	FINISH	BOD COLOR
ROOF	EPDM	-	BLACK
FASCIA (UPPER)	T1-11	PAINT	PPG1023-6 (CLAMSHELL)
FASCIA (LOWER)	DOUGLAS FIR	PAINT	PPG1023-6 (CLAMSHELL)
SOFFIT	DOUGLAS FIR	PAINT	MATCH INTERIOR CEILING STN
BEAMS	DOUGLAS FIR	PAINT	MATCH INTERIOR CEILING STN
MULLIONS	DOUGLAS FIR	PAINT	MATCH INTERIOR CEILING STN
COLUMNS	DOUGLAS FIR	PAINT	MATCH INTERIOR CEILING STN
COLUMN SPACERS	DOUGLAS FIR	PAINT	PPG1023-6 (CLAMSHELL)
WALLS	T1-11	PAINT	PPG1023-6 (CLAMSHELL)
WALLS	STONE	NONE	NATURAL
DOORS	WOOD	STN	PPG ST-2008 (COFFEE)
WINDOWS	METAL	FACTORY	BLACK
STOPS	WOOD	PAINT	BLACK
MISC METAL	-	PAINT	TO MATCH ADJACENT

INTERIOR FINISHES

ROOM #	NAME	AREA (+/-)	FLOOR FINISH	CEILING FINISH	NORTH WALL		EAST WALL		SOUTH WALL		WEST WALL		COMMENTS
					WALL FINISH	BASE	WALL FINISH	BASE	WALL FINISH	BASE	WALL FINISH	BASE	
100	VEST.	74 SF	CPT-1	WD-1	STF	TYPE F	STF	TYPE F	STF	TYPE F	STF	TYPE F	
101	EXHIBIT NO. 1	803 SF	CPT-1	WD-1	WD/STF	TYPE F	WD/STF	-	WD/STF	TYPE F	WD/STF	TYPE E	
102	EXHIBIT NO. 2	513 SF	CPT-1	WD-1	WD/STF	TYPE F	WD/STF	WD	WD/STF	TYPE F	WD/STF	-	
103	AUDITORIUM	1013 SF	CPT-1	ACT-1	GWB/GWB-2	TYPE C	GWB-2	TYPE C	GWB-2	TYPE C	GWB/GWB-2	TYPE C	<N> ACOUSTICAL PANELS ON WALL
104	STORAGE	71 SF	LCT-1	PT-1	GWB-2	RB	GWB-2	RB	GWB-2	RB	GWB-2	RB	
105	STORAGE	76 SF	LCT-1	PT-1	GWB-2	RB	GWB-2	RB	GWB-2	RB	GWB-2	RB	PATCH <E> FINISHES TO REMAIN AFTER REMOVAL OF BUILT-IN CASEWORK.
106	MECH. RM	42 SF	CN-1	PT-1	GWB	RB	GWB-2	RB	GWB-2	RB	GWB-2	RB	
107	WILDERNESS DESK	197 SF	CPT-1	WD-1	WD	TYPE E	WD/STF	TYPE E	WD/STF	TYPE E	WD/STF	TYPE E	REFINISH WD ELEMENTS (TRIM, BOARDS, ETC)
108	HALL	494 SF	CPT-2	PT-1	GWB-2/WD	TYPE A	GWB-2/WD	TYPE A	GWB-2/WD	TYPE A	GWB-2/WD	TYPE A	REFINISH WD WALL PANELING AND TRIM
109	OFFICE	142 SF	CPT-2	PT-1	GWB-2	TYPE A	GWB-2	TYPE A	GWB-2	TYPE A	GWB-2	TYPE A	
110	OFFICE	142 SF	CPT-2	PT-1	GWB-2	TYPE A	GWB-2	TYPE A	GWB-2	TYPE A	GWB-2	TYPE A	
111	OFFICE	142 SF	CPT-2	PT-1	GWB-2	TYPE A	GWB-2	TYPE A	GWB-2	TYPE A	GWB-2	TYPE A	
112	RR	57 SF	CT-1	PT-1	CWT	TYPE B	CWT	TYPE B	CWT	TYPE B	CWT	TYPE B	
113	RR	58 SF	CT-1	PT-1	CWT	TYPE B	CWT	TYPE B	CWT	TYPE B	CWT	TYPE B	
114	JC	14 SF	LCT-1	PT-1	CWT	TYPE C	CWT	TYPE C	CWT	TYPE C	CWT	TYPE C	
115	MECH. / ELEC.	141 SF	CN-1	OPEN	GWB-2	-	GWB-2	-	GWB-2	-	GWB-2	-	
116	SERVER ROOM	99 SF	CN-1	PT-1	GWB-2	TYPE A	GWB/GWB-2	TYPE A	GWB-2	TYPE A	GWB-2	TYPE A	
117	MAIL	38 SF	CPT-2	PT-1	GWB	TYPE A	GWB-2	TYPE A	GWB-2	TYPE A	GWB	TYPE A	
118	BREAK ROOM	215 SF	CPT-2/LCT-1	PT-1	GWB-2	TYPE A	GWB-2	TYPE A	GWB-2	TYPE A	GWB-2	TYPE A	REMOVE TYPE D BASE TRIM, PROVIDE <N> TYPE A TRIM TO MATCH ETR
119	STOR	98 SF	LCT-1	PT-1	GWB-2	TYPE C	GWB	TYPE C	GWB	TYPE C	GWB-2	TYPE C	
120	CONFERENCE	206 SF	CPT-2	PT-1	GWB-2	TYPE A	GWB-2	TYPE A	GWB-2	TYPE A	GWB-2	TYPE A	REMOVE <E> CHAIR RAIL AND PATCH WALL FOR SMOOTH FINISH
121	OFFICE	165 SF	CPT-2	PT-1	GWB-2	TYPE A	GWB-2	TYPE A	GWB-2	TYPE A	GWB/GWB-2	TYPE A	
122	OFFICE	90 SF	CPT-2	PT-1	GWB-2	TYPE A	GWB-2	TYPE A	GWB-2	TYPE A	GWB	TYPE A	
123	OFFICE	216 SF	CPT-2	PT-1	GWB-2	TYPE A	GWB	TYPE A	GWB-2	TYPE A	GWB-2	TYPE A	
124	OFFICE	142 SF	CPT-2	PT-1	GWB-2	TYPE A	GWB-2	TYPE A	GWB-2	TYPE A	GWB-2	TYPE A	
125	OFFICE	138 SF	CPT-2	PT-1	GWB-2	TYPE A	GWB-2	TYPE A	GWB-2	TYPE A	GWB-2	TYPE A	
150	WOMEN'S RR	189 SF	CT-1	WD-1	CWT	TYPE B	CWT	TYPE B	CWT	TYPE B	CWT	TYPE B	
151	MEN'S RR	189 SF	CT-1	WD-1	CWT	TYPE B	CWT	TYPE B	CWT	TYPE B	CWT	TYPE B	
152	JANITOR	64 SF	CN-1	PT-1	GWB-2	RB	GWB-2	RB	GWB-2	RB	GWB-2	RB	
153	MECH. RM	32 SF	CN-1	PT-1	GWB-2	RB	GWB-2	RB	GWB-2	RB	GWB-2	RB	

SCALE: (A) 4 0 4 8 SCALE OF FEET

TRUE PLAN

STATE OF COLORADO
1-16-2026
ELIZABETH McCLURE HALLAS
203482
LICENSED ARCHITECT

AE FIRM PRIME: OTAK, INC. REDMOND, WA SUBCONTRACTOR: ANDERSON HALLAS ARCHITECTS GOLDEN, CO	DESIGNED: CR / VC DRAFTED: VC / MS / DM TECH REVIEW: CR / EMH DATE: 01/16/2026	SUB SHEET NO. A520	TITLE OF SHEET FINISH PLAN & SCHEDULE REHABILITATE KAWUNEECHE VISITOR CENTER ROCKY MOUNTAIN NATIONAL PARK	DRAWING NO. 121 165639 PMIS/PKG NO. 326235 SHEET 82 OF 177

1/20/2026 10:20:11 AM Autodesk Docs://2024-260 NPS ROMO Kawuneeche VC DD-CA wOtak/2024260 NPS ROMO KAWUNEECHE VISITOR CENTER_BIM360.rvt

1/20/2026 10:20:13 AM Autodesk Docs://2024-260 NPS ROMO Kawuneeche VC DD-CA wOtak/2024260 NPS ROMO KAWUNEECHE VISITOR CENTER_BIM360.rvt

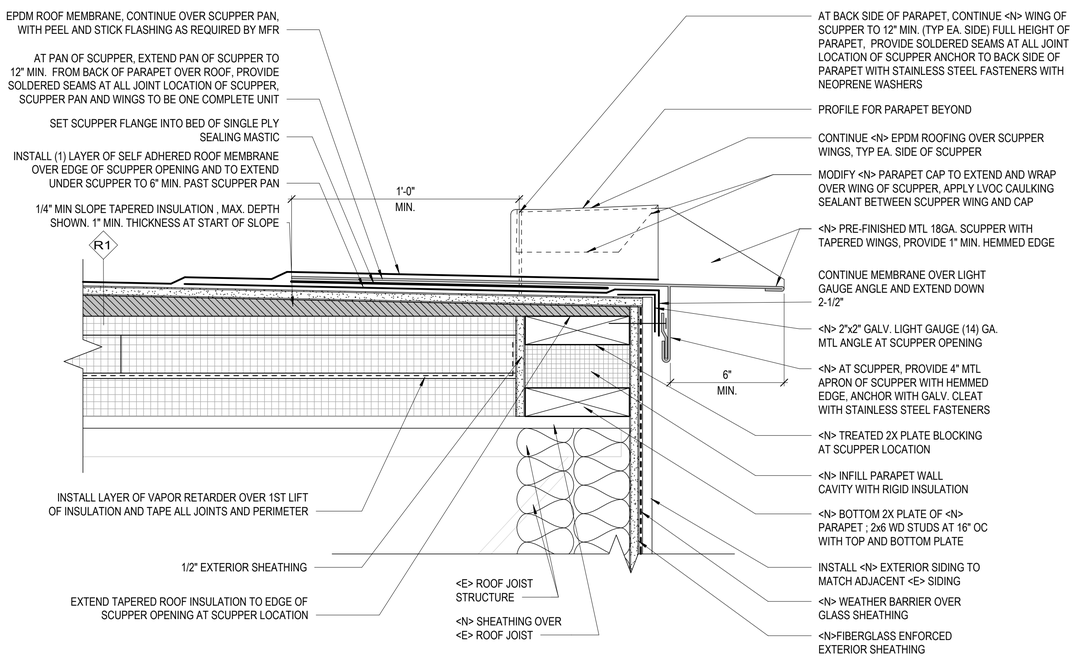

6 A601 TYPICAL SECTION DETAIL AT SCUPPER AT COMFORT STATION ROOF
SCALE (B)

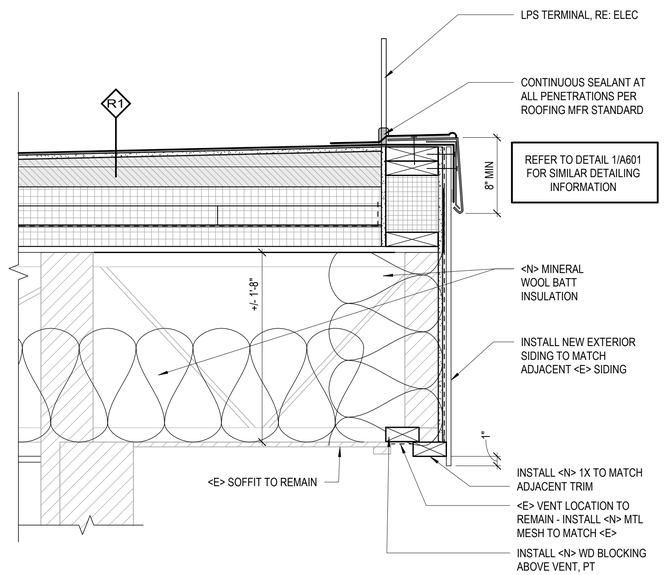

4 A601 TYPICAL SECTION DETAIL AT COMFORT STATION ROOF
SCALE (A)

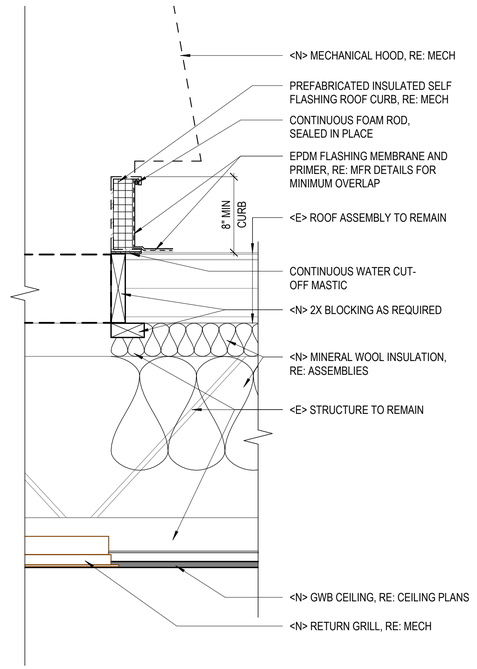

2 A601 SECTION DETAIL - MECHANICAL HOOD
SCALE (A)

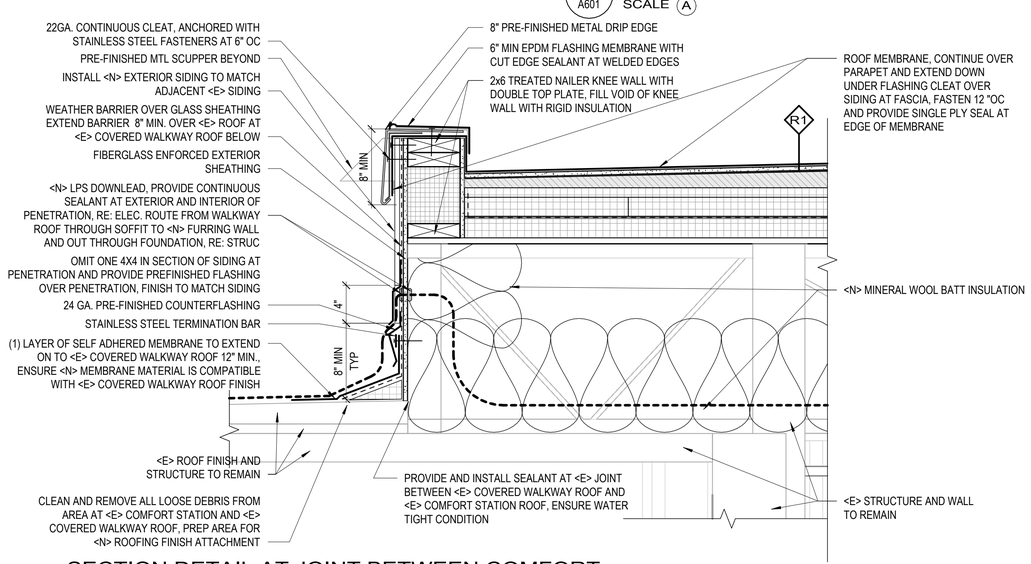

1 A601 SECTION DETAIL AT JOINT BETWEEN COMFORT STATION ROOF AND WALKWAY ROOF
SCALE (A)

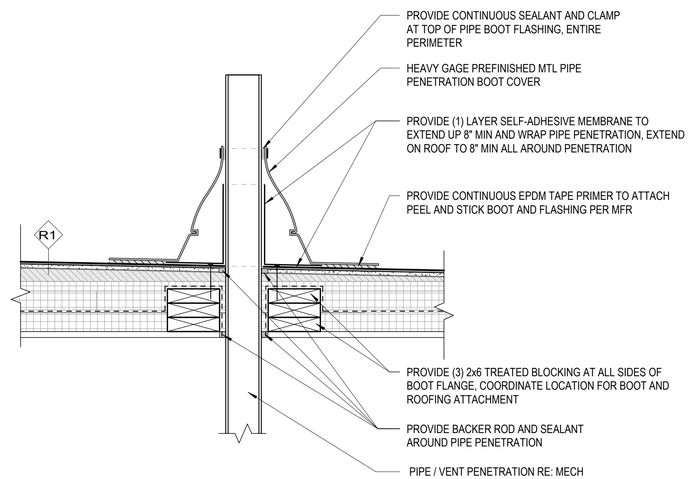

NOTE: VENT PIPING SIZE VARIES, ACCOMMODATE FLASHING BOOT TO VENT PIPE SIZE

5 A601 TYP. ROOF PENETRATION FLASHING
SCALE (A)

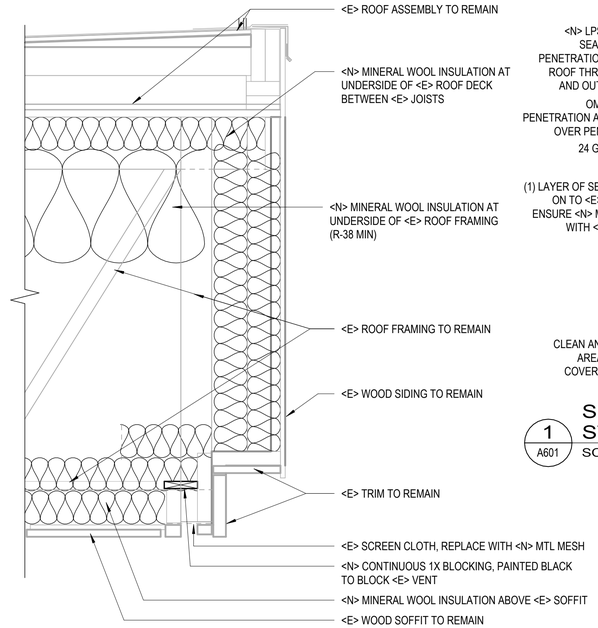

3 A601 SECTION DETAIL - EXISTING SOFFIT
SCALE (A)

SCALE: (B) 6 3 0 6 SCALE OF INCHES

SCALE: (A) 12 6 0 12 SCALE OF INCHES

STATE OF COLORADO
1-16-2026
ELIZABETH McCLURE HALLAS
203482
LICENSED ARCHITECT

AE FIRM PRIME: OTAK, INC. REDMOND, WA SUBCONTRACTOR: ANDERSON HALLAS ARCHITECTS GOLDEN, CO	DESIGNED: CR / VC DRAWN: VC / MS / DM TECH REVIEW: CR / EMH DATE: 01/16/2026	SUB SHEET NO. A601	TITLE OF SHEET EXTERIOR DETAILS REHABILITATE KAWUNEECHE VISITOR CENTER ROCKY MOUNTAIN NATIONAL PARK	DRAWING NO. 121 165639 PMIS/PKG NO. 326235 SHEET 83 OF 177

1/23/2026 8:51:39 AM Autodesk Docs://2024-260 NPS ROMO Kawuneeche VC DD-CA wOtak/2024260 NPS ROMO KAWUNEECHE VISITOR CENTER_BIM360.rvt

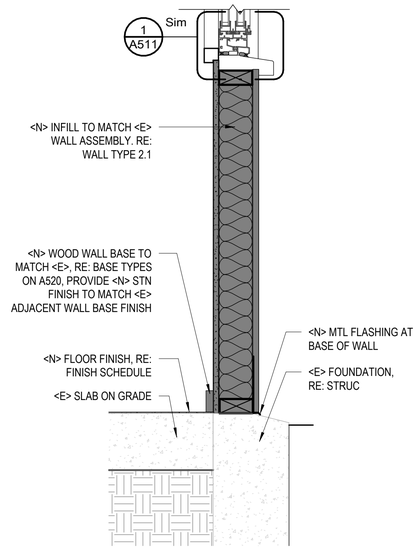

4 A602 WALL SECTION - ADMIN INFILL
SCALE (A)

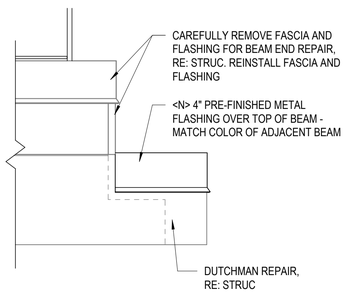

3 A602 WOOD BEAM REPAIR
SCALE (A)

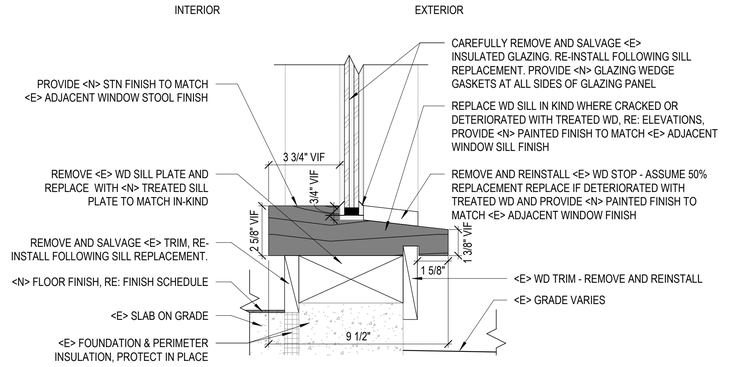

2 A602 SILL REPLACEMENT
SCALE (B)

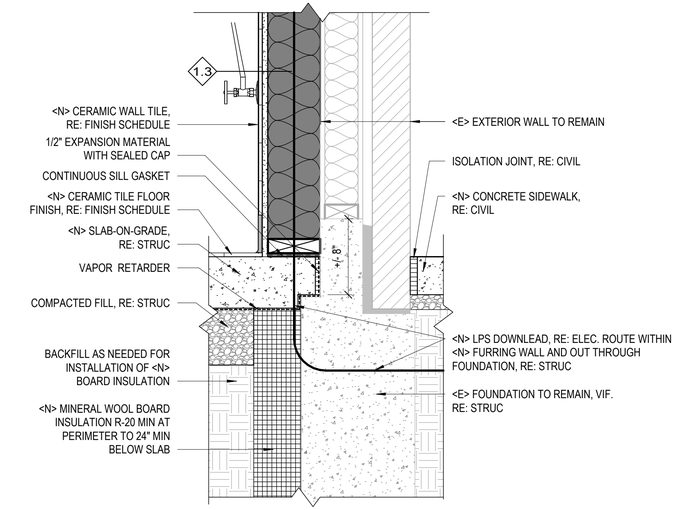

1 A602 SECTION DETAIL AT COMFORT STATION WALL
SCALE (A)

SCALE: (B) 6 3 0 6 SCALE OF INCHES

SCALE: (A) 12 6 0 12 SCALE OF INCHES

STATE OF COLORADO
1-16-2026
ELIZABETH McCLURE HALLAS
203482
LICENSED ARCHITECT

AE FIRM PRIME: OTAK, INC. REDMOND, WA SUBCONTRACTOR: ANDERSON HALLAS ARCHITECTS GOLDEN, CO	DESIGNED: CR / VC DRAWN: VC / MS / DM TECH REVIEW: CR / EMH DATE: 01/16/2026	SUB SHEET NO. A602	TITLE OF SHEET EXTERIOR DETAILS REHABILITATE KAWUNEECHE VISITOR CENTER ROCKY MOUNTAIN NATIONAL PARK	DRAWING NO. 121 165639 PMIS/PKG NO. 326235 SHEET 84 OF 177

1/20/2026 10:20:15 AM Autodesk Docs://2024-260 NPS ROMO Kawuneeche VC DD-CA wOtak/2024260 NPS ROMO KAWUNEECHE VISITOR CENTER_BIM360.rvt

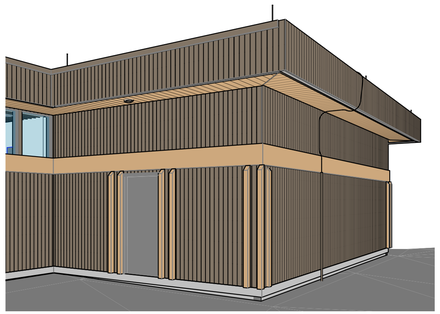

3 A603 LPS DOWNLEAD F — DOWNLEAD CABLE EXPOSED
N.T.S.

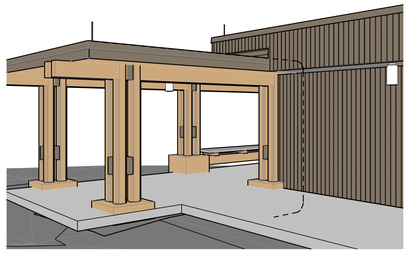

5 A603 LPS DOWNLEAD H — DOWNLEAD CONCEALED IN WALL
N.T.S.

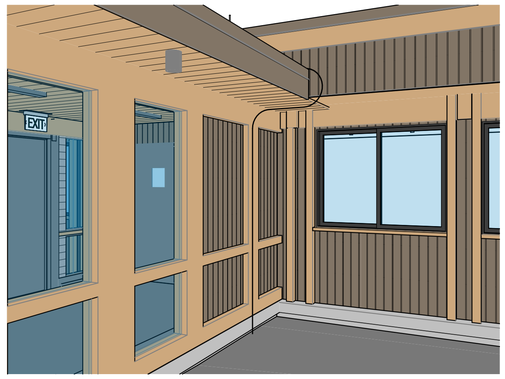

2 A603 LPS DOWNLEAD C — DOWNLEAD CABLE EXPOSED
N.T.S.

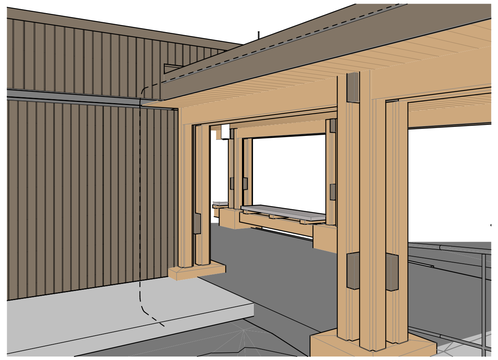

4 A603 LPS DOWNLEAD E — DOWNLEAD CONCEALED IN WALL
N.T.S.

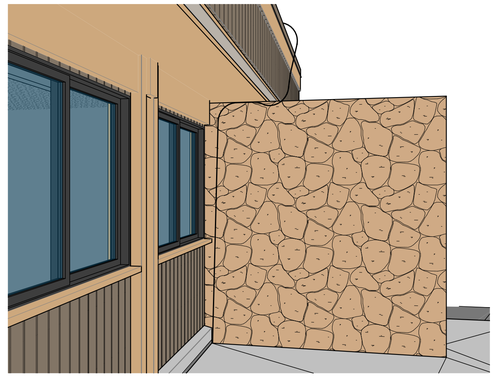

1 A603 LPS DOWNLEAD A — DOWNLEAD CABLE EXPOSED
N.T.S.

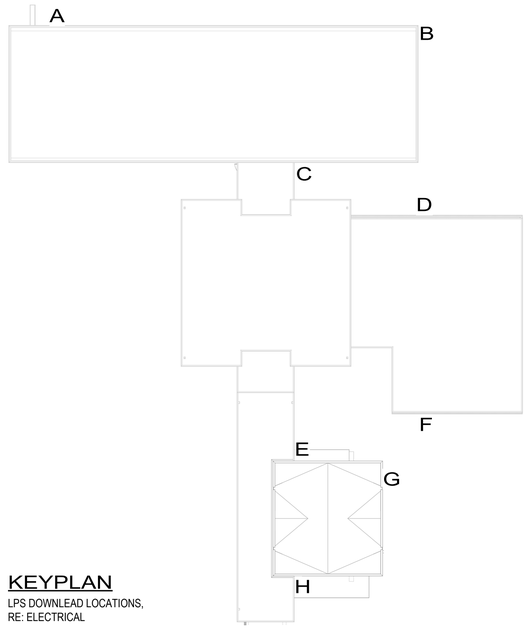

KEYPLAN
LPS DOWNLEAD LOCATIONS,
RE: ELECTRICAL

NOTE: THE BUILDING IS SHOWN IN THE ABOVE ISOMETRIC VIEWS TO ILLUSTRATE THE DESIGN INTENT OF LIGHTNING PROTECTION DOWNLEADS ONLY. REFER TO ELECTRICAL FOR ADDITIONAL INFORMATION.

TRUE PLAN

STATE OF COLORADO
1-16-2026
ELIZABETH McCLURE HALLAS
203482
LICENSED ARCHITECT

AE FIRM PRIME: OTAK, INC. REDMOND, WA SUBCONTRACTOR: ANDERSON HALLAS ARCHITECTS GOLDEN, CO	DESIGNED: CR / VC DRAWN: VC / MS / DM TECH REVIEW: CR / EMH DATE: 01/16/2026	SUB SHEET NO. A603	TITLE OF SHEET EXTERIOR DETAILS - LPS DOWNLEADS REHABILITATE KAWUNEECHE VISITOR CENTER ROCKY MOUNTAIN NATIONAL PARK	DRAWING NO. 121 165639 PMIS/PKG NO. 326235 SHEET 85 OF 177

1/20/2026 10:20:15 AM Autodesk Docs://2024-260 NPS ROMO Kawuneeche VC DD-CA wOtak/2024260 NPS ROMO KAWUNEECHE VISITOR CENTER_BIM360.rvt

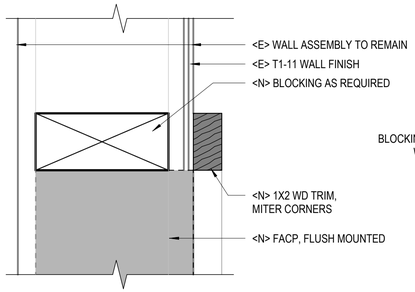

6 A610 SECTION DETAIL - FACP
SCALE B

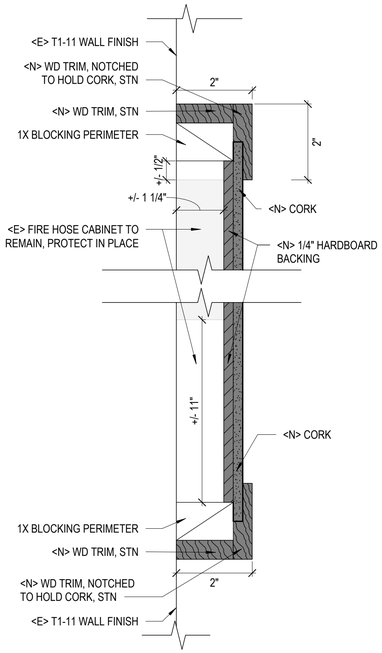

5 A610 BULLETIN SECTION DETAIL
SCALE B

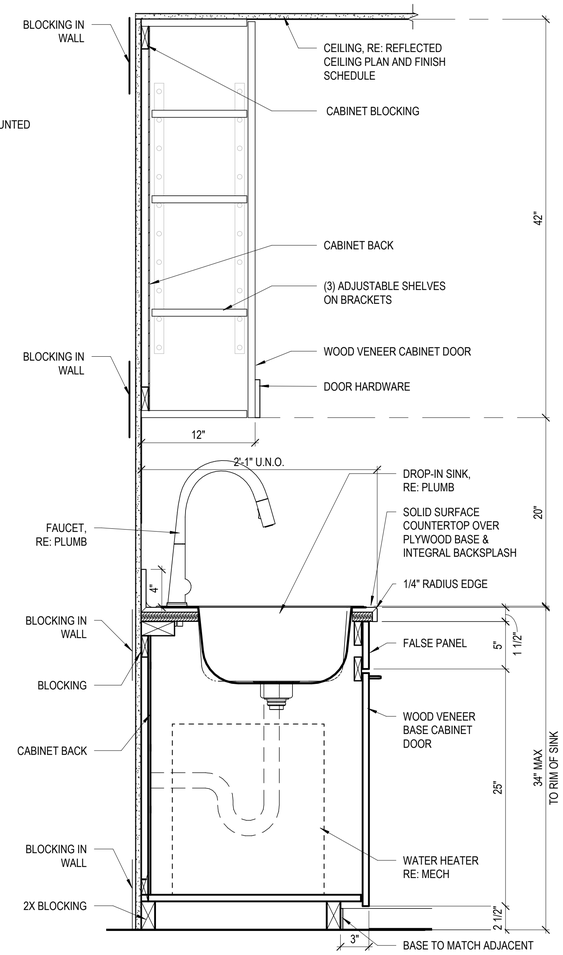

4 A610 SECTION DETAIL - BREAK ROOM MILLWORK AT SINK
SCALE A

NOTE: MILLWORK PER CURRENT EDITION OF AWI STANDARDS CUSTOM GRADE

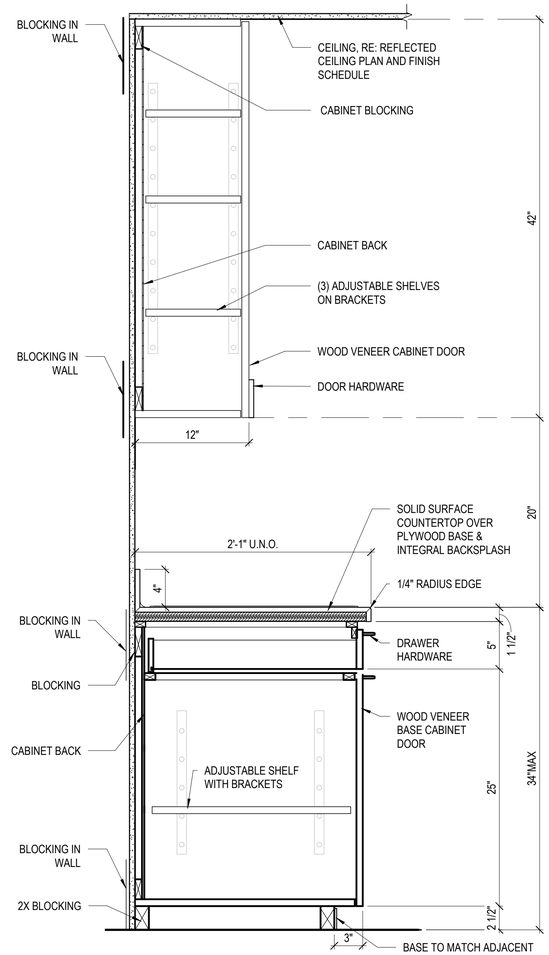

3 A610 SECTION DETAIL - BREAKROOM MILLWORK
SCALE A

NOTE: MILLWORK PER CURRENT EDITION OF AWI STANDARDS CUSTOM GRADE

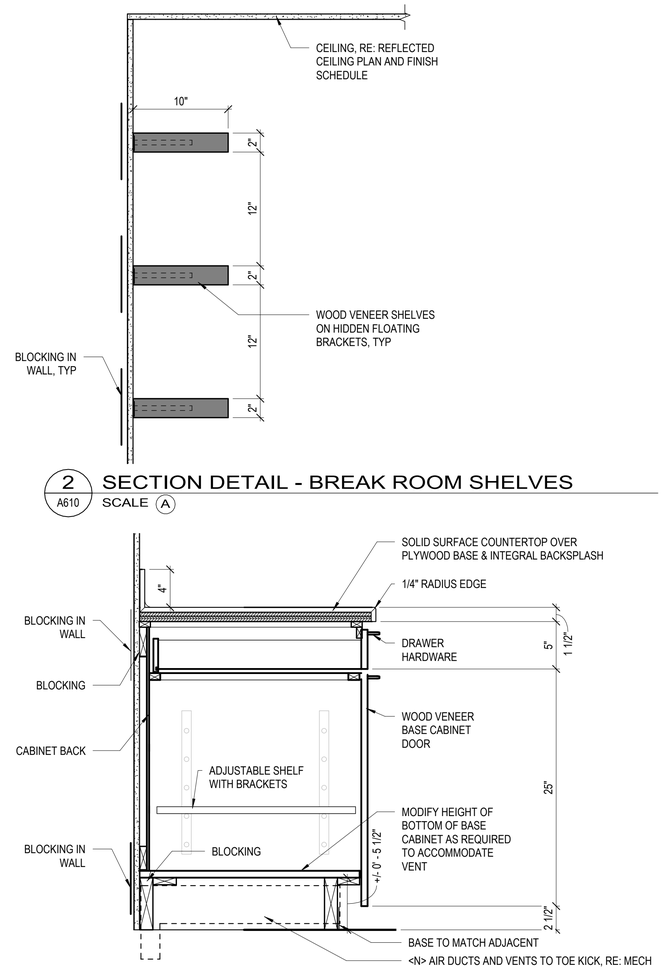

2 A610 SECTION DETAIL - BREAK ROOM SHELVES
SCALE A

1 A610 SECTION DETAIL - BASE CABINET AT VENT
SCALE A

NOTE: MILLWORK PER CURRENT EDITION OF AWI STANDARDS CUSTOM GRADE

SCALE: B 4 0 4 8 SCALE OF FEET

SCALE: A 12 6 0 12 SCALE OF INCHES

STATE OF COLORADO
1-16-2026
ELIZABETH McCLURE HALLAS
203482
LICENSED ARCHITECT

AE FIRM PRIME: OTAK, INC. REDMOND, WA SUBCONTRACTOR: ANDERSON HALLAS ARCHITECTS GOLDEN, CO	DESIGNED: CR / VC DRAWN: VC / MS / DM TECH REVIEW: CR / EMH DATE: 01/16/2026	SUB SHEET NO. A610	TITLE OF SHEET INTERIOR DETAILS REHABILITATE KAWUNEECHE VISITOR CENTER ROCKY MOUNTAIN NATIONAL PARK	DRAWING NO. 121 165639 PMIS/PKG NO. 326235 SHEET 86 OF 177

STRUCTURAL GENERAL NOTES

DESIGN LOADS:

1. SITE INFORMATION:
   - A. COORDINATES: 40.2667,-105.8327
   - B. ELEVATION: 8,730
2. AUTHORITY HAVING JURISDICTION: UNITED STATES GOVERNMENT
3. DESIGN LOADS BASED ON: 2024 INTERNATIONAL BUILDING CODE, ASCE 7-22, AND REFERENCED DOCUMENTS
4. RISK CATEGORY: II STANDARD
5. ROOFS:
   - A. GROUND SNOW LOAD, Pg (ULTIMATE) 131 PSF
   - B. FLAT-ROOF SNOW LOAD, Pf 110 PSF
   - C. SNOW EXPOSURE FACTOR, Ce 1.00
   - D. THERMAL FACTOR, Ct 1.20
6. WIND:
   - A. BASIC DESIGN WIND SPEED, V, (3-SECOND GUST) 115 MPH
   - B. ALLOWABLE STRESS DESIGN WIND SPEED, V_{ASD}, (3-SECOND GUST) 90 MPH
   - C. INTERNAL PRESSURE COEFFICIENT 0.18 (ENCLOSED)
   - D. WIND EXPOSURE C
   - E. GROUND ELEVATION FACTOR 0.73
   - F. COMPONENTS AND CLADDING ULTIMATE DESIGN WIND PRESSURES
     1. PRESSURES MAY BE REDUCED FOR EFFECTIVE WIND AREAS LARGER THAN 10 SQUARE FEET, BUT NOT BELOW 16 PSF.
     2. ALLOWABLE WIND PRESSURE (ASD) MAY BE DETERMINED BY MULTIPLYING THE ULTIMATE PRESSURE BY 0.6.

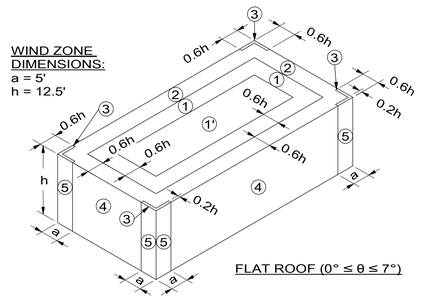

FLAT ROOF (0° ≤ θ ≤ 7°)

COMPONENT AND CLADDING ULTIMATE WIND PRESSURE - FLAT ROOF		
ROOF (EFFECTIVE WIND AREA)	ROOF SURFACE PRESSURE (psf)	
	10 sf	100 sf
Negative Zone 1	-33.6	-26.2
Negative Zone 1'	-19.3	-19.3
Negative Zone 2	-44.3	-34.8
Negative Zone 3	-60.4	-41.4
Positive All Zones	16.0	16.0
Overhang Zone 1 & 1'	-30.4	-28.6
Overhang Zone 2	-41.1	-28.5
Overhang Zone 3	-57.1	-35.1

WALL (EFFECTIVE WIND AREA)	WALL SURFACE PRESSURE (psf)	
	10 sf	100 sf
Negative Zone 4	-20.9	-18.1
Negative Zone 5	-25.7	-20.0
Positive Zone 4 & 5	19.3	16.4

1. SEISMIC:
   - A. SPECTRAL RESPONSE ACCELERATION PARAMETERS
     1. SHORT PERIOD
        - a. S_S 0.270g
        - b. S_{DS} 0.220g
     2. ONE SECOND
        - a. S_1 0.055g
        - b. S_{D1} 0.082g
   - B. SOILS SITE CLASS DEFAULT (C, CD, OR D)
   - C. SEISMIC IMPORTANCE FACTOR 1.0
   - D. SEISMIC DESIGN CATEGORY B

FOUNDATION DESIGN:

1. FOUNDATIONS ARE DESIGNED WITHOUT AN ENGINEER'S SOIL INVESTIGATION. THE DESIGN CRITERIA IS ASSUMED FOR PURPOSES OF FOUNDATION DESIGN.
2. GEOTECHNICAL ENGINEER SHALL VERIFY SOIL CONDITIONS AND TYPES DURING EXCAVATION AND PRIOR TO PLACEMENT OF FORMWORK OR CONCRETE.
3. FROST DEPTH SHALL BE 3'-0 MINIMUM BELOW EXTERIOR GRADE.

FOOTINGS:

1. DESIGN OF FOOTINGS IS BASED ON IBC TABLE 1806.2:
   - A. MAXIMUM ALLOWABLE BEARING PRESSURE = 2,000 PSF
2. BEAR ON THE NATURAL UNDISTURBED SOIL OR COMPACTED STRUCTURAL FILL. EXTERIOR FOOTINGS SHALL BEAR BELOW FROST DEPTH.

REINFORCED CONCRETE:

1. DESIGN IS BASED ON ACI 318 "BUILDING CODE REQUIREMENTS FOR STRUCTURAL CONCRETE."
2. CONCRETE WORK SHALL CONFORM TO ACI 301 "STANDARD SPECIFICATIONS FOR STRUCTURAL CONCRETE."
3. STRUCTURAL CONCRETE SHALL HAVE THE PROPERTIES INDICATED IN THE CONCRETE MIX TABLE.
4. CONCRETE MIX TABLE NOTES:
   - A. CONCRETE MIX SUBMITTAL SHALL INCLUDE A SINGLE PAGE LIST OF MIXES, IN TABULAR FORMAT, WITH KEY MIX REQUIREMENTS.
   - B. SLUMP:
     - a. VALUES INDICATED ARE SUGGESTED BASED ON USE AND TYPICAL PLACEMENT METHODS. SUPPLIER MAY ADJUST SLUMP AS NECESSARY FOR FIELD CONDITIONS AND INSTALLATION METHOD USED.
     - b. CONCRETE SUPPLIER TO PROVIDE TARGET SLUMP ON BATCH TICKETS FOR TESTING AGENCY QUALITY CONTROL.
   - C. CEMENT SHALL CONFORM TO ASTM C150, ASTM C595, OR ASTM C1157.
   - D. AIR CONTENT:
     - a. N/P: AIR ENTRAINING ADMIXTURES NOT PERMITTED, ENTRAPPED AIR ONLY
     - b. N/R: NO REQUIREMENT, NO STRUCTURAL AIR CONTENT REQUIREMENTS
   - E. CHLORIDE ION: MAXIMUM WATER-SOLUBLE CHLORIDE ION (Cl-) CONTENT IN CONCRETE, PERCENT BY WEIGHT OF CEMENT
   - F. ADMIXTURES/COMMENTS:
     - a. AAR: PROVIDE DOCUMENTATION THAT AGGREGATES ARE NOT ALKALI-SILICA REACTIVE OR ALKALI-CARBONATE REACTIVE PER ASTM C1778.
5. GENERAL CONTRACTOR TO COORDINATE CONCRETE MOISTURE LEVEL AND ANTICIPATED MOISTURE MITIGATION PROCEDURES WITH CONCRETE SUPPLIER/MIX DESIGNER AND OTHER AFFECTED SUBCONTRACTORS (INCLUDING BUT NOT LIMITED TO FLOORING) TO ADDRESS ALL POTENTIAL SCHEDULE AND INSTALLATION CONFLICTS.
6. DETAILING, FABRICATION, AND PLACEMENT OF REINFORCING STEEL SHALL BE IN ACCORDANCE WITH ACI 315 "DETAILS AND DETAILING OF CONCRETE REINFORCEMENT."
7. WELDED WIRE FABRIC SHALL CONFORM TO ASTM A1064.
8. REINFORCING BARS SHALL CONFORM TO ASTM A615, GRADE 60, EXCEPT BARS SHOWN TO BE FIELD-BENT SHALL BE ASTM A706, GRADE 60.
9. BARS TO BE WELDED SHALL CONFORM TO ASTM A706.
10. UNLESS NOTED OTHERWISE ON THE STRUCTURAL DRAWINGS, LAP BARS 48 BAR DIAMETERS.
11. EXCEPT AS NOTED ON THE DRAWINGS, CONCRETE PROTECTION FOR REINFORCEMENT IN CAST-IN-PLACE CONCRETE SHALL BE AS FOLLOWS:
    - A. CAST AGAINST AND PERMANENTLY EXPOSED TO EARTH: 3"
    - B. EXPOSED TO EARTH OR WEATHER:
      1. #6 THROUGH #18 BARS 2"
      2. #5 BAR, W31 OR D31 WIRE, AND SMALLER 1-1/2"
    - C. NOT EXPOSED TO WEATHER OR IN CONTACT WITH GROUND:
      1. SLABS, WALLS, JOISTS: #11 BARS AND SMALLER 3/4"
      2. BEAMS AND COLUMNS:
         - a. PRIMARY REINFORCEMENT 1-1/2"
         - b. STIRRUPS, TIES, SPIRALS 1-1/2"

CONCRETE MIX TABLE

INTENDED USE	EXPOSURE CLASS	COMPRESSIVE STRENGTH, f'c PSI	COMPRESSIVE STRENGTH, f'c TESTING AGE, DAYS	CONCRETE WEIGHT	CEMENT TYPE	MAX W/CM RATIO	MAXIMUM AGGREGATE SIZE	SLUMP, INCHES (+/- 1")	AIR CONTENT PERCENT (+/- 1.5%)	MAXIMUM CHLORIDE ION, (Cl-)	MIX NOTES/ COMMENTS
FOOTINGS	F0-S0-W0-C1	3000	56	NW	N/R	N/R	1"	N/R	N/R	0.30%	25% MAX FLY ASH
FOUNDATION WALLS	F2-S0-W1-C1	4500	56	NW	N/R	0.45	3/4"	N/R	6%	0.30%	AAR; 25% MAX FLY ASH
SLAB ON GRADE - INTERIOR	F0-S0-W0-C0	4000	56	NW	N/R	N/R	3/4"	N/R	N/R	1.00%	25% MAX FLY ASH
SLAB ON GRADE - EXTERIOR	F3-S0-W1-C0	5000	28	NW	N/R	0.40	3/4"	N/R	6%	1.00%	SCM; AAR; 25% MAX FLY ASH

POST-INSTALLED ANCHORS:

1. ALL CAST-IN-PLACE ANCHORS DESIGNED IN ACCORDANCE WITH ACI 318.
2. POST-INSTALLED ANCHORS SHALL ONLY BE USED WHERE SPECIFIED ON THE CONSTRUCTION DOCUMENTS. THE CONTRACTOR SHALL OBTAIN APPROVAL FROM THE CONTRACTING OFFICER PRIOR TO INSTALLING POST-INSTALLED ANCHORS IN PLACE OF MISSING OR MISPLACED CAST-IN-PLACE ANCHORS.
3. CARE SHALL BE TAKEN IN PLACING POST-INSTALLED ANCHORS TO AVOID CONFLICTS WITH EXISTING REBAR. EXISTING REINFORCING BARS SHALL NOT BE CUT UNLESS APPROVED BY THE CONTRACTING OFFICER.
4. ALL ANCHORS MUST BE INSTALLED IN STRICT ACCORDANCE WITH THE MANUFACTURER'S PRINTED INSTALLATION INFORMATION (MPII) IN CONJUNCTION WITH EDGE DISTANCE, SPACING, AND EMBEDMENT DEPTH AS INDICATED ON THE DRAWINGS. HOLES SHALL BE DRILLED AND CLEANED IN ACCORDANCE WITH THE MPII.
5. SUBSTITUTION REQUESTS FOR PRODUCTS OTHER THAN THOSE SPECIFIED SHALL BE SUBMITTED BY THE CONTRACTOR TO THE CONTRACTING OFFICER ALONG WITH CALCULATIONS THAT ARE PREPARED & SEALED BY A REGISTERED PROFESSIONAL ENGINEER; REGISTRATION MUST BE IN THE STATE IN WHICH THE PROJECT IS LOCATED. THE CALCULATIONS SHALL DEMONSTRATE THAT THE SUBSTITUTED PRODUCT IS CAPABLE OF ACHIEVING EQUIVALENT PERFORMANCE VALUES (MINIMUM) OF THE SPECIFIED PRODUCT USING THE APPROPRIATE DESIGN PROCEDURE AND/OR STANDARD(S) AS REQUIRED BY THE AUTHORITY HAVING JURISDICTION.
6. THE CONTRACTOR SHALL ARRANGE FOR A MANUFACTURER'S FIELD REPRESENTATIVE TO PROVIDE INSTALLATION TRAINING FOR ALL PRODUCTS TO BE USED, PRIOR TO THE ANCHOR INSTALLATION. A RECORD OF TRAINING SHALL BE KEPT ON SITE AND MADE AVAILABLE TO THE CONTRACTING OFFICER / SPECIAL INSPECTOR AS REQUESTED.
7. ADHESIVE ANCHORS MUST BE INSTALLED IN CONCRETE AGED A MINIMUM OF 21 DAYS (ACI 318-19 17.2.2)
8. ALL POST-INSTALLED ANCHORS SHALL BE INSTALLED IN DRY HOLES THAT HAVE BEEN DRILLED, CLEANED, AND PREPARED IN STRICT ACCORDANCE WITH THE MANUFACTURER'S PRINTED INSTALLATION INFORMATION AND THE RESPECTIVE ICC-ES EVALUATION REPORTS.

CONCRETE POST-INSTALLED ANCHORS			
ANCHOR TYPE	DEWALT	HILTI	SIMPSON
SCREW	SCREW-BOLT+ (ICC ESR-3889)	KWIK HUS-EZ (ICC ESR-3027)	TITEN HD (ICC ESR-2713)
ADHESIVE	AC200+ (ICC ESR-4027)	HIT HY-200 V3 (ICC ESR-4868)	AT-3G (ICC ESR-5026)

STRUCTURAL DRAWING LIST	
SHEET NO	SHEET TITLE
S000	STRUCTURAL GENERAL NOTES
S001	STRUCTURAL GENERAL NOTES
S002	STRUCTURAL ABBREVIATIONS & SYMBOLS
S101	FOUNDATION & FIRST FLOOR PLAN
S102	ROOF FRAMING PLAN
S601	COMFORT STATION SECTIONS
S602	ADMIN & VC SECTIONS

COLORADO LICENSED IVAN R. GLASER 42148 PROFESSIONAL ENGINEER 01/16/2026

AE FIRM PRIME: OTAK, INC. REDMOND, WA SUBCONTRACTOR: JVA, INC. BOULDER, CO	DESIGNED: CBB DRAWN: DJM / CBB TECH REVIEW: IRG DATE: 01/16/2026	SUB SHEET NO. S000	TITLE OF SHEET STRUCTURAL GENERAL NOTES REHABILITATE KAWUNEECHE VISTOR CENTER ROCKY MOUNTAIN NATIONAL PARK	DRAWING NO. 121 165639 PMIS/PKG NO. 326235 SHEET 87 OF 177

1/8/2026 3:36:02 PM Autodesk Docs://2024-260 NPS ROMO Kawuneeche VC DD-CA wOtak/241132 ROMO KVC JVA Struct S24.rvt

STRUCTURAL GENERAL NOTES (CONT)

STRUCTURAL WOOD FRAMING:

1. IN-GRADE BASE VALUES HAVE BEEN USED FOR DESIGN.
2. DIMENSIONAL LUMBER FRAMING SHALL BE DOUGLAS FIR-LARCH NO. 2 AND BETTER UNO.
3. SOLID TIMBER BEAMS AND POSTS SHALL BE DOUGLAS FIR-LARCH NO. 1 AND BETTER UNO.
4. STUDS SHALL BE DOUGLAS FIR-LARCH STUD GRADE AND BETTER UNO.
5. ALL LUMBER SHALL BE 19% MAXIMUM MOISTURE CONTENT AT THE TIME OF INSTALLATION UNO.
6. ALL WOOD EXPOSED TO WEATHER OR IN CONTACT WITH CONCRETE OR MASONRY SHALL BE PRESSURE TREATED DOUGLAS FIR-LARCH OR SOUTHERN YELLOW PINE. PRESERVATIVE-TREATED WOOD SHALL BE TREATED IN ACCORDANCE WITH AWPA STANDARDS U1 AND M4. TREATMENTS SHALL HAVE NO AMMONIA ADDED AND SHALL BE THE FOLLOWING USE CATEGORY:
   A. UC2 AT INTERIOR
   B. UC3B AT EXTERIOR WITH NO GROUND CONTACT
   C. UC4B AT EXTERIOR WITH GROUND CONTACT
7. FASTENERS FOR USE WITH TREATED WOOD SHALL BE CORROSION RESISTANT IN ACCORDANCE WITH SECTION 2304.10.6 OF THE IBC.
8. ALL CONNECTORS USED WITH PRESSURE-TREATED MATERIAL SHALL BE STAINLESS STEEL ASTM 304 OR 316, OR HAVE A SIMPSON Z-MAX (G185) OR HDG COATING. STANDARD COATING (G90) IS ACCEPTABLE AT INTERIOR CONDITIONS WITH NON PRESSURE-TREATED LUMBER ONLY. CONNECTORS ARE TO BE IN ACCORDANCE WITH ASTM A653 OR ASTM 123.
9. ALL IRON AND STEEL PRODUCTS ATTACHED TO TREATED LUMBER SHALL BE HOT-DIPPED GALVANIZED IN ACCORDANCE WITH ASTM A123 OR SHALL BE TYPE 304 OR 316 STAINLESS STEEL.
10. STRUCTURAL MEMBERS SHALL NOT BE CUT FOR PIPES, ETC. UNLESS SPECIFICALLY NOTED OR DETAILED ON THE STRUCTURAL DRAWINGS.
11. ALL BOLTS BEARING ON WOOD SHALL HAVE STANDARD CUT WASHERS UNDER HEAD AND/OR NUT, UNO.
12. LIGHT GAGE METAL FRAMING CONNECTORS SPECIFIED IN THE DRAWINGS ARE SIMPSON STRONG-TIE CODE-APPROVED PRODUCTS. THEY ARE SPECIFIED AS THE BASIS OF DESIGN. ALTERNATE PRODUCTS WITH CODE-APPROVED TESTING REPORTS MAY BE SUBSTITUTED THAT HAVE EQUAL OR GREATER SALIENT CHARACTERISTICS. CHARACTERISTICS INCLUDE SAME OR GREATER ALLOWABLE STRESS DESIGN CAPACITIES FOR THE SAME INTENDED USE(S) AND SIMILAR BASIC GEOMETRIC PROPERTIES. NOTE THAT EXACT SIZE, GAGE, AND FASTENER SIZE / COUNT NEED NOT MATCH UNLESS SUCH CHARACTERISTICS ARE SPECIFICALLY NOTED IN THE DRAWINGS. THE CONTRACTOR SHALL COMPARE SPECIFIED BASIS OF DESIGN PRODUCTS USING THE LATEST EDITION OF SIMPSON STRONG-TIE'S CATALOG TO PROPOSED SUBSTITUTION PRODUCTS AND SUBMIT TO CONTRACTING OFFICER FOR APPROVAL. CONNECTORS SHALL BE INSTALLED WITH ALL HOLES FILLED (ROUND AND TRIANGULAR) WITH THE MAXIMUM SIZE FASTENERS RECOMMENDED BY THE MANUFACTURER TO DEVELOP THE MAXIMUM RATED CAPACITY, UNLESS SPECIFICALLY NOTED OTHERWISE.
13. CONNECTOR BOLTS AND LAG SCREWS SHALL CONFORM TO ANSI/ASME B18.2.1 AND ASTM SAE J429 GRADE 1.
14. NAILS AND SPIKES SHALL CONFORM TO ASTM F1667.
15. WOOD SCREWS SHALL CONFORM TO ANSI/ASME B18.6.1.
16. LEAD HOLES FOR LAG SCREWS SHALL BE 40%-70% OF THE SHANK DIAMETER AT THE THREADED SECTION AND EQUAL TO THE SHANK DIAMETER AT THE UNTHREADED SECTION.
17. CONVENTIONAL LIGHT FRAMING SHALL COMPLY WITH IBC SECTION 2308.
18. ALL JOISTS AND BEAMS SHALL BE SEAT-CUT FOR FULL UNIFORM BEARING AT SUPPORTS, SEATS, CAPS, ETC.
19. EXCEPT AS NOTED OTHERWISE, MINIMUM NAILING SHALL BE PROVIDED AS SPECIFIED IN TABLE 2304.10.2 "FASTENING SCHEDULE" OF THE IBC.
20. ALL MULTIPLE MEMBER BEAMS SHALL BE NAILED TOGETHER WITH MAX NUMBER OF 10D NAILS VERTICALLY @ 3" AND HORIZONTALLY @ 12" PER PLY.

WOOD SHEATHING:

1. PLYWOOD AND ORIENTED STRAND BOARD (OSB) ROOF SHEATHING SHALL BE APA RATED WITH STAMP INCLUDING APA TRADEMARK AND PANEL SPAN RATING.
   A. MINIMUM ROOF SHEATHING: 19/32" OSB OR CDX PLYWOOD, APA 40/20, NAILED.
2. ALL SHEATHING SHEETS SHALL HAVE 1/8" GAP AT ALL EDGES AND JOINTS.
3. PROVIDE (1) PANEL SHEATHING CLIP AT ALL UNSUPPORTED ROOF SHEATHING PANEL EDGES. WHERE SPANS ARE GREATER THAN 32" PROVIDE (2) CLIPS.

ENGINEERED LUMBER:

1. STRUCTURAL CAPACITIES OF STRUCTURAL COMPOSITE LUMBER SHALL BE IN CONFORMANCE WITH SECTION 2303.1.10 OF THE IBC.
2. MANUFACTURER OF STRUCTURAL COMPOSITE LUMBER PRODUCTS SHALL HAVE PROPER CODE EVALUATION REPORTS FOR ALL PRODUCTS AND SHALL BE APPROVED BY THE CONTRACTING OFFICER.
3. THE CONTRACTOR SHALL NOT CUT, NOTCH, OR OTHERWISE ALTER STRUCTURAL COMPOSITE LUMBER MEMBERS WITHOUT WRITTEN PERMISSION OF THE CONTRACTING OFFICER AND THE MANUFACTURER; HOWEVER, HOLES MAY BE CUT IN MEMBERS IN ACCORDANCE WITH THE MANUFACTURER'S ALLOWABLE HOLE CHART.
4. MEMBERS NOTED AS LVL (LAMINATED VENEER LUMBER) ON PLAN SHALL BE 1-3/4" WIDE X DEPTH INDICATED, PLANT-FABRICATED, AND HAVE THE FOLLOWING MINIMUM ALLOWABLE DESIGN VALUES:
   A. F_b = 2600 PSI
   B. F_v = 285 PSI
   C. F_{cPAR} = 2460 PSI
   D. F_{cPERP} = 750 PSI
   E. E = 1900 KSI

STRUCTURAL STEEL:

1. STRUCTURAL STEEL SHALL BE DETAILED, FABRICATED, AND ERECTED IN ACCORDANCE WITH THE "SPECIFICATION FOR STRUCTURAL STEEL BUILDINGS" (AISC 360) AND THE "CODE OF STANDARD PRACTICE FOR STEEL BUILDINGS AND BRIDGES" (AISC 303) BY THE AMERICAN INSTITUTE OF STEEL CONSTRUCTION (AISC).
2. PLATES AND ANGLES SHALL CONFORM TO ASTM A36, 36 KSI YIELD, OR ASTM A572, 50 KSI YIELD.
3. HOLLOW STRUCTURAL SECTION (HSS) RECTANGULAR SHAPES SHALL CONFORM TO ASTM A500, GRADE C, 50 KSI YIELD.
4. WELDING SHALL BE DONE BY A CERTIFIED WELDER IN ACCORDANCE WITH THE AISC DOCUMENTS LISTED ABOVE, THE AMERICAN WELDING SOCIETY (AWS) D1.1 STRUCTURAL WELDING CODE, AND THE RECOMMENDATIONS FOR THE USE OF 70KSI ELECTRODES. WHERE NOT SPECIFICALLY NOTED, MINIMUM WELD SHALL BE 3/16" FILLET BY LENGTH OF CONTACT EDGE.

CORROSION CONTROL:

1. ALL STEEL MEMBERS EXPOSED TO WEATHER SHALL BE HOT DIPPED GALVANIZED PER ASTM A123.
2. FASTENERS AND HARDWARE SHALL BE HOT DIPPED GALVANIZED PER ASTM A153 OR ASTM B695 CLASS 50 (A490 BOLTS SHALL NOT BE HOT DIPPED GALVANIZED). STAINLESS STEEL FASTENERS AND HARDWARE MAY ALSO BE USED.
3. ALL FIELD CUT OR DAMAGED SURFACES, FIELD WELDED AREAS AND AUTHORIZED NON-GALVANIZED MEMBERS AS INDICATED ON THE STRUCTURAL DRAWINGS SHALL BE REPAIRED WITH (2) COATS OF A 95% ZINC RICH PAINT PER ASTM A780 (ZRC PREFERRED).

FIELD VERIFICATION OF EXISTING CONDITIONS:

1. THE GENERAL CONTRACTOR SHALL THOROUGHLY INSPECT AND SURVEY THE EXISTING STRUCTURE TO VERIFY CONDITIONS THAT AFFECT THE WORK SHOWN ON THE DRAWINGS.
2. THE GENERAL CONTRACTOR SHALL REPORT ANY VARIATIONS OR DISCREPANCIES TO THE CONTRACTING OFFICER BEFORE PROCEEDING.

STRUCTURAL ERECTION AND BRACING REQUIREMENTS:

1. THE STRUCTURAL DRAWINGS ILLUSTRATE AND DESCRIBE THE COMPLETED STRUCTURE WITH ELEMENTS IN THEIR FINAL POSITIONS, PROPERLY SUPPORTED, CONNECTED, AND/OR BRACED.
2. THE STRUCTURAL DRAWINGS ILLUSTRATE TYPICAL AND REPRESENTATIVE DETAILS TO ASSIST THE GENERAL CONTRACTOR. DETAILS SHOWN APPLY AT ALL SIMILAR CONDITIONS UNLESS OTHERWISE INDICATED. ALTHOUGH DUE DILIGENCE HAS BEEN APPLIED TO MAKE THE DRAWINGS AS COMPLETE AS POSSIBLE, NOT EVERY DETAIL IS ILLUSTRATED AND NOT EVERY EXCEPTIONAL CONDITION IS ADDRESSED.
3. ALL PROPRIETARY CONNECTIONS AND ELEMENTS SHALL BE INSTALLED IN ACCORDANCE WITH THE MANUFACTURERS' RECOMMENDATIONS.
4. ALL WORK SHALL BE ACCOMPLISHED IN A WORKMANLIKE MANNER AND IN ACCORDANCE WITH THE APPLICABLE CODES AND LOCAL ORDINANCES.
5. THE GENERAL CONTRACTOR IS RESPONSIBLE FOR COORDINATION OF ALL WORK, INCLUDING LAYOUT AND DIMENSION VERIFICATION, MATERIALS COORDINATION, SHOP DRAWING REVIEW, AND THE WORK OF SUBCONTRACTORS. ANY DISCREPANCIES OR OMISSIONS DISCOVERED IN THE COURSE OF THE WORK SHALL BE IMMEDIATELY REPORTED TO THE CONTRACTING OFFICER FOR RESOLUTION.
6. CONTINUATION OF WORK WITHOUT NOTIFICATION OF DISCREPANCIES RELIEVES THE CONTRACTING OFFICER FROM ALL CONSEQUENCES.
7. UNLESS OTHERWISE SPECIFICALLY INDICATED, THE STRUCTURAL DRAWINGS DO NOT DESCRIBE METHODS OF CONSTRUCTION.
8. SIGNIFICANT PERMANENT EQUIPMENT SIZES, WEIGHTS AND LOCATIONS ARE INDICATED ON THE DRAWINGS AS PROVIDED TO THE ENGINEER DURING DESIGN. CHANGES IN SIZE, WEIGHT, OR LOCATION MUST BE SUBMITTED IN WRITING FOR REVIEW BY THE CONTRACTING OFFICER. REQUIRED CURBS, SUPPORTS, OR BRACES NOT SHOWN ON THE DRAWINGS ARE THE RESPONSIBILITY OF THE EQUIPMENT SUPPLIER.
9. THE GENERAL CONTRACTOR, IN THE PROPER SEQUENCE, SHALL PERFORM OR SUPERVISE ALL WORK NECESSARY TO ACHIEVE THE FINAL COMPLETED STRUCTURE, AND TO PROTECT THE STRUCTURE, WORKMEN, AND OTHERS DURING CONSTRUCTION. SUCH WORK SHALL INCLUDE, BUT NOT BE LIMITED TO TEMPORARY BRACING, SHORING FOR CONSTRUCTION EQUIPMENT, SHORING FOR EXCAVATION, FORMWORK, SCAFFOLDING, SAFETY DEVICES AND PROGRAMS OF ALL KINDS, SUPPORT AND BRACING FOR CRANES AND OTHER ERECTION EQUIPMENT.
10. THE CONTRACTING OFFICER BEARS NO RESPONSIBILITY FOR THE ABOVE ITEMS, AND OBSERVATION VISITS TO THE SITE DO NOT IN ANY WAY INCLUDE INSPECTIONS OF THESE ITEMS.

SPECIAL INSPECTIONS:

1. THE FOLLOWING SPECIAL INSPECTIONS AND TESTING SHALL BE PERFORMED BY A QUALIFIED SPECIAL INSPECTOR, RETAINED BY THE CONTRACTOR, IN ACCORDANCE WITH THE FOLLOWING SECTIONS OF IBC CHAPTER 17:
   A. SECTION 1704 SPECIAL INSPECTIONS, CONTRACTOR RESPONSIBILITY, AND STRUCTURAL OBSERVATIONS AND THE FOLLOWING SUB-SECTIONS:
      1. 1704.2 SPECIAL INSPECTIONS AND TESTS
      2. 1704.3 STATEMENT OF SPECIAL INSPECTIONS
   B. SECTION 1705 REQUIRED VERIFICATION AND INSPECTION AND THE FOLLOWING SUB-SECTIONS:
      1. 1705.2 STEEL CONSTRUCTION
      2. 1705.3 CONCRETE CONSTRUCTION
      3. 1705.6 SOILS
2. THE SPECIAL INSPECTOR SHALL BE A QUALIFIED PERSON WHO SHALL DEMONSTRATE COMPETENCE, TO THE SATISFACTION OF THE CONTRACTING OFFICER, FOR INSPECTION OF THE PARTICULAR TYPE OF CONSTRUCTION OR OPERATION REQUIRING SPECIAL INSPECTION. THE APPROVED INSPECTOR MUST BE INDEPENDENT FROM THE CONTRACTOR RESPONSIBLE FOR THE WORK BEING INSPECTED.
3. DUTIES AND RESPONSIBILITIES OF THE SPECIAL INSPECTOR SHALL BE TO INSPECT AND/OR TEST THE WORK OUTLINED ABOVE AND WITHIN THE STATEMENT OF SPECIAL INSPECTIONS IN ACCORDANCE WITH CHAPTER 17 OF THE IBC FOR CONFORMANCE WITH THE APPROVED CONSTRUCTION DOCUMENTS.
4. ALL DISCREPANCIES SHALL BE BROUGHT TO THE IMMEDIATE ATTENTION OF THE CONTRACTING OFFICER FOR CORRECTION.
5. PER SECTION 1704.2.4 THE SPECIAL INSPECTOR SHALL FURNISH REGULAR REPORTS TO THE CONTRACTING OFFICER. PROGRESS REPORTS FOR CONTINUOUS INSPECTION SHALL BE FURNISHED WEEKLY. INDIVIDUAL REPORTS OF PERIODIC INSPECTIONS SHALL BE FURNISHED WITHIN ONE WEEK OF INSPECTION DATES. THE REPORTS SHALL NOTE UNCORRECTED DEFICIENCIES, CORRECTION OF PREVIOUSLY REPORTED DEFICIENCIES, AND CHANGES TO THE APPROVED CONSTRUCTION DOCUMENTS AUTHORIZED BY THE CONTRACTING OFFICER.
6. THE SPECIAL INSPECTOR SHALL SUBMIT A FINAL SIGNED REPORT WITHIN 10 DAYS OF THE FINAL SPECIAL INSPECTION STATING WHETHER THE WORK REQUIRING SPECIAL INSPECTION WAS, TO THE BEST OF THE INSPECTOR'S KNOWLEDGE, IN CONFORMANCE WITH THE APPROVED CONSTRUCTION DOCUMENTS AND THE APPLICABLE WORKMANSHIP PROVISIONS OF THE IBC. WORK NOT IN COMPLIANCE SHALL BE NOTED IN THE REPORT.
7. EXCEPT AS NOTED, THE SPECIAL INSPECTIONS OUTLINED ABOVE ARE IN ADDITION TO, AND BEYOND THE SCOPE OF, PERIODIC STRUCTURAL OBSERVATIONS AS DEFINED IN SECTION 1704.6. STRUCTURAL OBSERVATIONS ARE INCLUDED IN THE STRUCTURAL ENGINEERING DESIGN AND CONSTRUCTION ADMINISTRATION SERVICES PROVIDED BY THE CONTRACTING OFFICER.

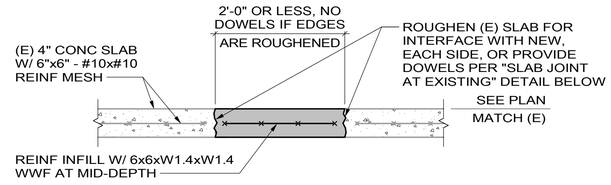

SLAB INFILL AT UNDERGROUND UTILITIES

RE-ESTABLISH CONTROL JOINT WHERE NEW SLAB INFILL CROSSES EXISTING JOINTS OR ADD CONTROL JOINTS AT 12'-0" EA WAY, MAX.

REPAIR UNDERSLAB VAPOR BARRIER (IF ENCOUNTERED) WITH NEW 15 MIL, MIN, MATERIAL OVERLAPPED 2", MIN, AND CONTINUOUSLY TAPED TO EXISTING BARRIER

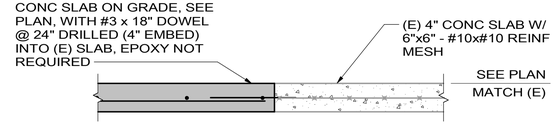

SLAB JOINT AT EXISTING

1 / S001 TYP SLAB ON GRADE INFILL

SCALE Ⓐ

- REFER TO ARCHITECTURAL DRAWINGS FOR LOCATIONS AND EXTENTS OF DEMO AND INFILL

SCALE: Ⓐ 1 0 1 2 3
SCALE OF FEET

COLORADO LICENSED IAN P. GLASSEY 42148 PROFESSIONAL ENGINEER 01/16/2026

AE FIRM PRIME: OTAK, INC. REDMOND, WA SUBCONTRACTOR: JVA, INC. BOULDER, CO	DESIGNED: CBB DRAWN: DJM / CBB TECH REVIEW: IRG DATE: 01/16/2026	SUB SHEET NO. S001	TITLE OF SHEET STRUCTURAL GENERAL NOTES REHABILITATE KAWUNEECHE VISTOR CENTER ROCKY MOUNTAIN NATIONAL PARK	DRAWING NO. 121 165639 PMIS/PKG NO. 326235 SHEET 88 OF 177

1/8/2026 3:36:02 PM Autodesk Docs://2024-260 NPS ROMO Kawuneeche VC DD-CA wOtak/241132 ROMO KVC JVA Struct S24.rvt

(E)	EXISTING
(N)	NEW
(R)	REMOVE
@	ON CENTER SPACING
AB	ANCHOR ROD (BOLT)
ADDL	ADDITIONAL
ADJ	ADJUSTABLE
AESS	ARCH EXPOSED STRUCTURAL STEEL
AFF	ABOVE FINISHED FLOOR
ALT	ALTERNATE
AMT	AMOUNT
ANCH	ANCHOR, ANCHORAGE
APPROX	APPROXIMATE
ARCH	ARCHITECT, -URAL
ATR	ALL THREAD ROD
AVG	AVERAGE
BC	BOTTOM OF CONCRETE
BL	BRICK LEDGE
BLK	BLOCK
BLKG	BLOCKING
BM	BEAM
BOT	BOTTOM
BRG	BEARING
BW	BOTTOM OF WALL
CB	COUNTERBORE
CF	CUBIC FOOT
CFS	COLD FORMED STEEL
CG	CENTER OF GRAVITY
CIP	CAST-IN-PLACE
CJ	CONSTRUCTION JOINT, CONTROL JOINT
CJP	COMPLETE JOINT PENETRATION
CL	CENTER LINE
CLG	CEILING
CLR	CLEAR
CM	CONSTRUCTION MANAGER, -MENT
CMU	CONCRETE MASONRY UNIT
COL	COLUMN
COM	COMMON
COMB	COMBINATION
CONC	CONCRETE
CONN	CONNECTION
CONT	CONTINUOUS, CONTINUE
COORD	COORDINATE, COORDINATION
CS	COUNTERSINK
CTR	CENTER
CY	CUBIC YARD
DAB	DEFORMED ANCHOR BAR
DET	DETAIL

DEV	DEVELOP
DIAG	DIAGONAL
DIM	DIMENSION
DL	DEAD LOAD
DN	DOWN
DP	DRILLED PIER
DT	DOUBLE TEE
DWG	DRAWING
DWL	DOWEL
E-E	END TO END
E-W	EAST TO WEST
EA	EACH
ECC	ECCENTRIC
EF	EACH FACE
EJ	EXPANSION JOINT
EL	ELEVATION
ELEC	ELECTRIC, ELECTRICAL
EMBED	EMBEDMENT
ENGR	ENGINEER
EQ	EQUAL
EQUIP	EQUIPMENT
EQUIV	EQUIVALENT
ES	EACH SIDE
EST	ESTIMATE
EXC	EXCAVATE
EXP	EXPANSION
EXT	EXTERIOR
F-F	FACE TO FACE
FD	FLOOR DRAIN
FDN	FOUNDATION
FF	FINISHED FLOOR, FAR FACE
FIG	FIGURE
FL	FLUSH
FLG	FLANGE
FLR	FLOOR
FO	FACE OF
FP	FULL PENETRATION
FS	FOOTING STEP, FAR SIDE
FTG	FOOTING
GA	GAGE, GAUGE
GALV	GALVANIZED
GC	GENERAL CONTRACTOR
GEN	GENERAL
GL	GLUED LAMINATED, GLULAM
GND	GROUND
GR	GRADE
GT	GIRDER TRUSS
GYP BD	GYPSUM BOARD

HAS	HEADED ANCHOR STUD
HDG	HOT-DIP GALVANIZED
HDR	HEADER
HORIZ	HORIZONTAL
HP	HIGH POINT
HT	HEIGHT
ID	INSIDE DIAMETER
IF	INSIDE FACE
INT	INTERIOR, INTERMEDIATE
IT	INVERTED TEE
JB	JOIST BEARING
JST	JOIST
JT	JOINT
K	KIP (1,000 LBS)
LGS	LIGHT GAGE STEEL
LL	LIVE LOAD
LLH	LONG LEG HORIZONTAL
LLV	LONG LEG VERTICAL
LOC	LOCATION
LP	LOW POINT
LSL	LAMINATED STRAND LUMBER
LT	LIGHT
LVL	LAMINATED VENEER LUMBER
MACH	MACHINE
MASY	MASONRY
MATL	MATERIAL
MAX	MAXIMUM
MB	MACHINE BOLT
MECH	MECHANICAL
MEZZ	MEZZANINE
MFR	MANUFACTURE, -ER, -ED
MIN	MINIMUM
ML	MICROLLAM (TRUS-JOIST BRAND LVL)
MO	MASONRY OPENING
MTL	METAL
N-S	NORTH TO SOUTH
NF	NEAR FACE
NIC	NOT IN CONTRACT
NS	NEAR SIDE
NTS	NOT TO SCALE
OCJ	OSHA COLUMN JOIST
OD	OUTSIDE DIAMETER
OF	OUTSIDE FACE
OH	OPPOSITE HAND
OPNG	OPENING
OPP	OPPOSITE
OSB	ORIENTED STRAND BOARD
PAF	POWDER ACTUATED FASTENER

PC	PRECAST
PCF	POUNDS PER CUBIC FOOT
PE	PRE-ENGINEERED
PEN	PENETRATION
PERP	PERPENDICULAR
PJP	PARTIAL JOINT PENETRATION
PL	PLATE
PLF	POUND PER LINEAR FOOT
PNL	PANEL
PP	PANEL POINT
PS	PRESTRESSED
PSF	POUNDS PER SQUARE FOOT
PSI	POUNDS PER SQUARE INCH
PSL	PARALLEL STRAND LUMBER
PT	POST TENSIONED, PRESSURE TREATED
PTN	PARTITION
PWD	PLYWOOD
QTY	QUANTITY
R	RADIUS
RE	REFERENCE, REFER TO
RECT	RECTANGLE
REINF	REINFORCE, -ED, -ING
REQ	REQUIRED
REQMT	REQUIREMENT
RET	RETAINING
RM	ROOM
RMO	ROUGH MASONRY OPENING
RO	ROUGH OPENING
SC	SLIP-CRITICAL
SCH	SCHEDULE
SDST	SELF-DRILLING/SELF-TAPPING
SECT	SECTION
SF	SQUARE FEET, SUB-FLOOR
SFRS	SEISMIC FORCE-RESISTING SYSTEM
SHT	SHEET
SHTG	SHEATHING
SIM	SIMILAR
SLH	SHORT LEG HORIZONTAL
SLV	SHORT LEG VERTICAL
SOG	SLAB ON GRADE
SP	SPACES, SPACED
SPEC	SPECIFICATIONS
SQ	SQUARE
SSR	SHEAR STUD RAIL
ST	SNUG-TIGHT
STD	STANDARD
STIFF	STIFFENER
STL	STEEL

STRUCT	STRUCTURE, -AL
SUPT	SUPPORT
SY	SQUARE YARD
SYM	SYMMETRICAL
T&B	TOP AND BOTTOM
T&G	TOUNGE AND GROOVE
TB	TOP OF BEAM
TC	TOP OF CONCRETE
TCA	TORQUE-CONTROLLED ANCHOR
TD	TOP OF DECK
THD	THREAD
THK	THICK, -NESS
TJ	TOP OF JOIST
TL	TOTAL LOAD
TPG	TOPPING
TRANS	TRANSVERSE
TW	TOP OF WALL
TYP	TYPICAL
ULT	ULTIMATE
UNO	UNLESS OTHERWISE NOTED
VERT	VERTICAL
VIF	VERIFY IN FIELD
WP	WORK POINT
WT	WEIGHT
WTS	WELDED THREADED STUD
WWF	WELDED WIRE FABRIC
XS	EXTRA STRONG
XSECT	CROSS SECTION
XXS	DOUBLE EXTRA STRONG

SYMBOLS KEY	
	DIRECTION OF DECK SPAN
GRID	GRID DESIGNATION
X	REVISION
	SHORING
	STEP IN FLOOR ELEVATION
	CIP CONCRETE
	EXISTING CONCRETE
	EARTH
(XXX'-X)	TOP OF FOOTING ELEVATION
XXX'-X	TOP OF FLOOR ELEVATION

COLORADO LICENSED
IAN R. GLASSEY
42148
PROFESSIONAL ENGINEER
01/16/2026

AE FIRM PRIME: OTAK, INC. REDMOND, WA SUBCONTRACTOR: JVA, INC. BOULDER, CO	DESIGNED: CBB DRAWN: DJM / CBB TECH REVIEW: IRG DATE: 01/16/2026	SUB SHEET NO. S002	TITLE OF SHEET STRUCTURAL ABBREVIATIONS & SYMBOLS REHABILITATE KAWUNEECHE VISTOR CENTER ROCKY MOUNTAIN NATIONAL PARK	DRAWING NO. 121 165639 PMIS/PKG NO. 326235 SHEET 89 OF 177

1/8/2026 3:36:02 PM Autodesk Docs://2024-260 NPS ROMO Kawuneeche VC DD-CA wOtak/241132 ROMO KVC JVA Struct S24.rvt

1/22/2026 4:22:28 PM Autodesk Docs://2024-260 NPS ROMO Kawuneeche VC DD-CA wOtak/241132 ROMO KVC JVA Struct S24.rvt

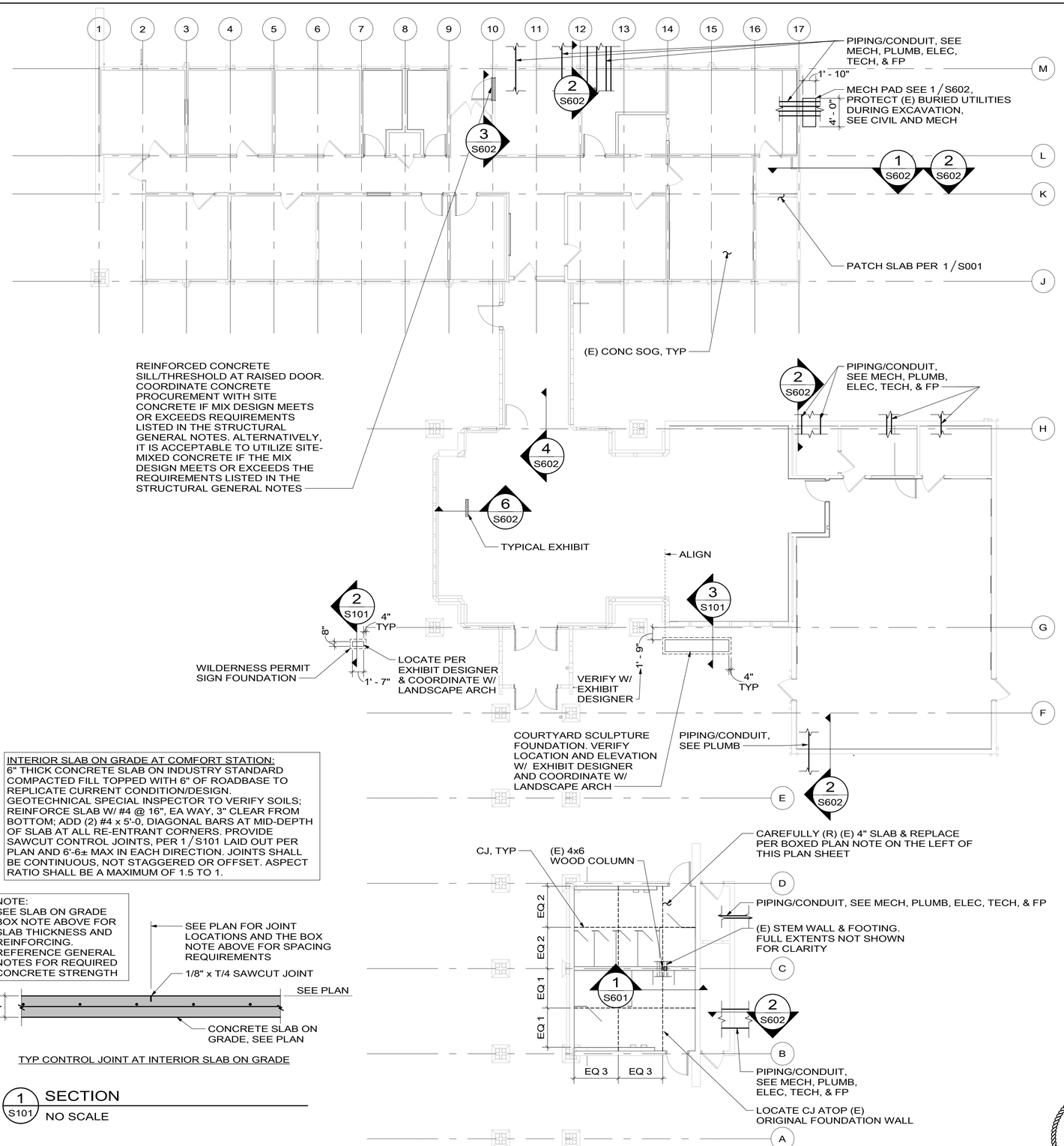

FOUNDATION & FIRST FLOOR PLAN
SCALE Ⓐ

INTERIOR SLAB ON GRADE AT COMFORT STATION:
6" THICK CONCRETE SLAB ON INDUSTRY STANDARD COMPACTED FILL TOPPED WITH 6" OF ROADBASE TO REPLICATE CURRENT CONDITION/DESIGN. GEOTECHNICAL SPECIAL INSPECTOR TO VERIFY SOILS; REINFORCE SLAB W/ #4 @ 16", EA WAY, 3" CLEAR FROM BOTTOM; ADD (2) #4 x 5'-0, DIAGONAL BARS AT MID-DEPTH OF SLAB AT ALL RE-ENTRANT CORNERS. PROVIDE SAWCUT CONTROL JOINTS, PER 1/S101 LAID OUT PER PLAN AND 6'-6± MAX IN EACH DIRECTION. JOINTS SHALL BE CONTINUOUS, NOT STAGGERED OR OFFSET. ASPECT RATIO SHALL BE A MAXIMUM OF 1.5 TO 1.

NOTE:
SEE SLAB ON GRADE BOX NOTE ABOVE FOR SLAB THICKNESS AND REINFORCING. REFERENCE GENERAL NOTES FOR REQUIRED CONCRETE STRENGTH

TYP CONTROL JOINT AT INTERIOR SLAB ON GRADE

1 S101 SECTION
NO SCALE

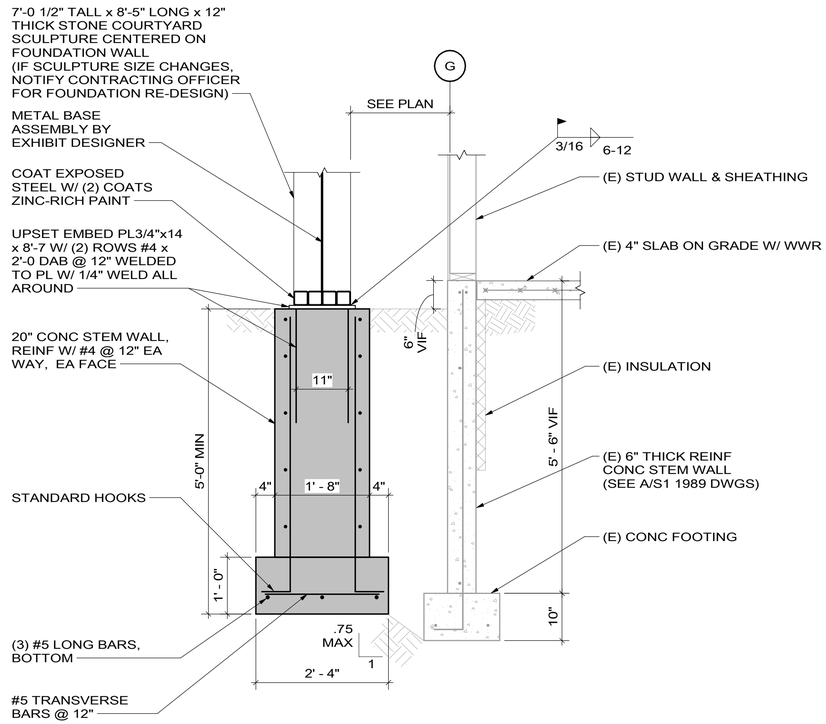

3 S101 SECTION
SCALE Ⓑ

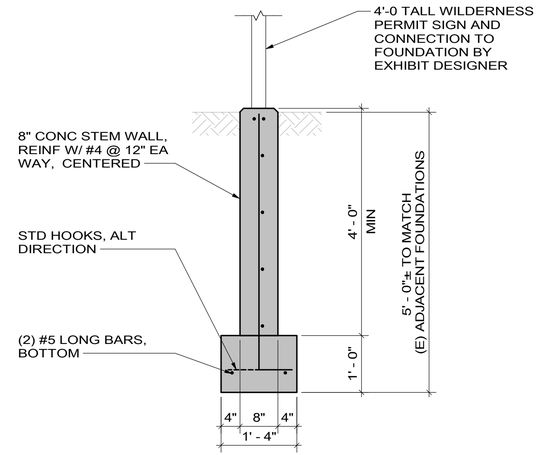

2 S101 SECTION
SCALE Ⓑ

SCALE: Ⓑ 1 0 1 2 3 SCALE OF FEET
SCALE: Ⓐ 8 0 8 16 SCALE OF FEET
TRUE PLAN

COLORADO LICENSED IAN R. GLASER 42148 PROFESSIONAL ENGINEER 01/16/2026

AE FIRM PRIME: OTAK, INC. REDMOND, WA SUBCONTRACTOR: JVA, INC. BOULDER, CO	DESIGNED: CBB DRAWN: DJM / CBB TECH REVIEW: IRG DATE: 01/16/2026	SUB SHEET NO. S101	TITLE OF SHEET: FOUNDATION & FIRST FLOOR PLAN REHABILITATE KAWUNEECHE VISTOR CENTER ROCKY MOUNTAIN NATIONAL PARK	DRAWING NO. 121 / 165639 PMIS/PKG NO. 326235 SHEET 90 OF 177

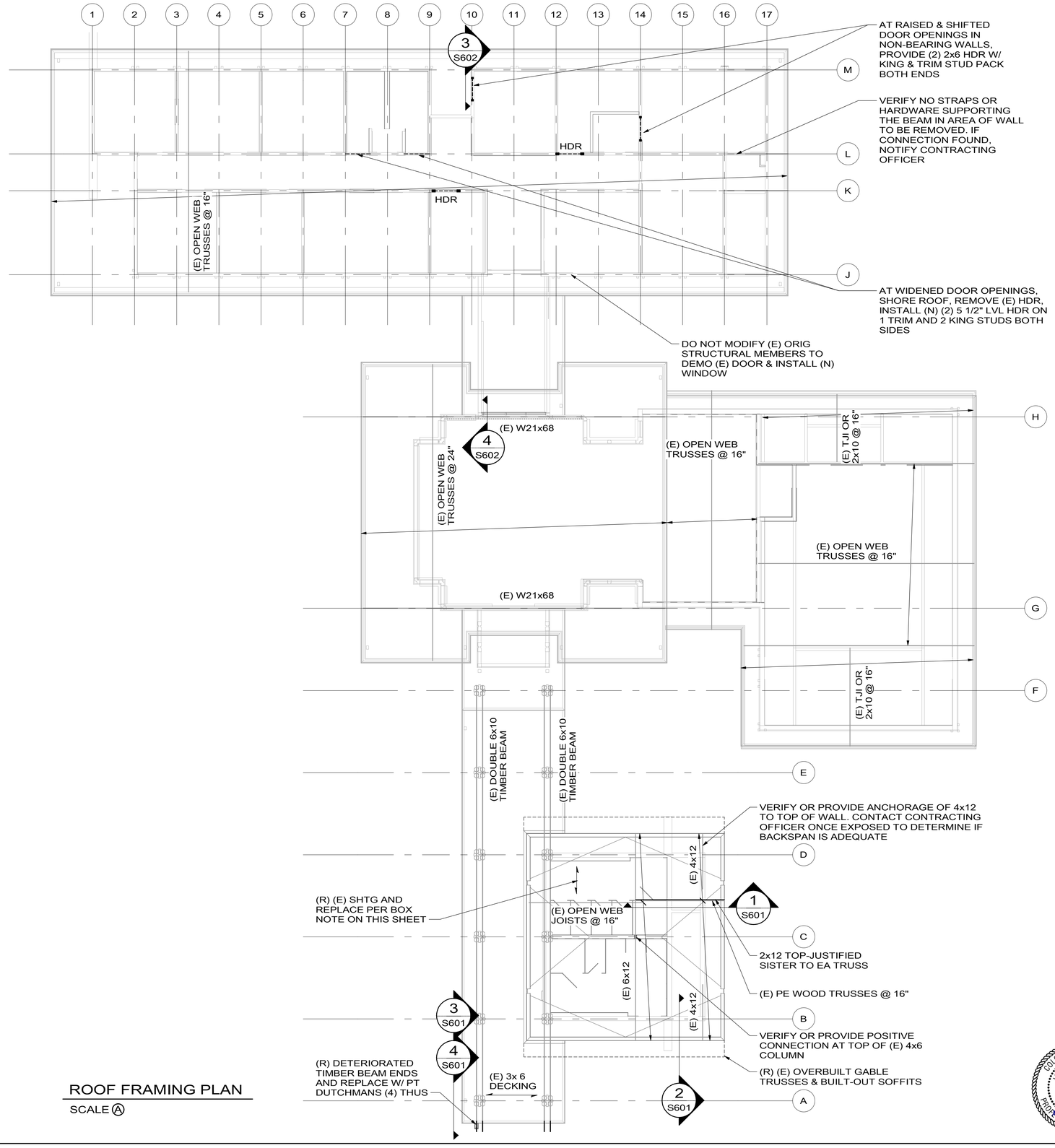

ROOF FRAMING PLAN
SCALE Ⓐ

AT PLYWOOD, SUB-CEILING 'BLOCKING' AT OVERHEAD SIGNAGE ACOUSTIC PANELS.
FASTEN 'BLOCKING' PANELS SAME AS ADJACENT NON-'BLOCKING' PANELS, EXCEPT ADD (12) #8x2" WOOD SCREWS @ 2' SPACING AROUND PERIMETER OF PANEL, AND (3) #8x2" SCREWS DOWN CENTERLINE OF PANEL @ 2' SPACING INTO BOTTOM CHORDS OF (E) TRUSSES. HANG OVERHEAD SIGNAGE ACOUSTIC PANELS FROM 'BLOCKING' PANELS ONLY WITH T-NUTS PER EXHIBIT DESIGN DRAWINGS. SPACE T-NUT AND HANGER RODS SO THAT MAX LOAD ON EACH IS 50#. SEE 6 / S602

TYP (N) HDR IN BEARING WALL:
- INDICATED AS "HDR" ON PLAN
- (2) 5 1/2" LVL HEADER SUPPORTED ON (1) TRIM STUD & (2) KING STUDS EACH END

FIRE PROTECTION ROOF SUPPORT CONNECTION GUIDELINES:
- DO NOT PLACE ANY FASTENERS IN THE TRUSS TOP CHORDS WITHIN 4" OF THE TRUSS PINS
- WHERE NEEDED TO SUPPORT FIRE PROTECTION PIPES, REINFORCE TOP CHORDS AT PANEL POINTS W/ 2x8 x 1'-4" BLOCKS. PROVIDE BLOCKING BETWEEN (E) TRUSSES AND FASTEN TO 2x8 REINFORCING BLOCKS. FASTEN PIPE HANGING EQUIPMENT TO BLOCKING BETWEEN TRUSSES WITH HARDWARE PER FIRE PROTECTION DRAWING AND SUCH THAT POINT LOAD ON BLOCKING DOES NOT EXCEED 150#. SEE 5 / S602

TYPICAL ROOF SHEATHING AT COMFORT STATION:
19/32" APA 40/20 RATED SHEATHING FASTENED WITH 8d NAILS (0.113"Ø x 2 3/8") @ 6" ALONG PANEL EDGES AND @ 12" ALONG INTERMEDIATE FRAMING MEMBERS. LAY PANELS PERPENDICULAR TO FRAMING MEMBERS AND STAGGER PANEL JOINTS.

PROVIDE PRICING ALLOWANCE FOR UNKNOWN SPOT REPAIRS DISCOVERED DURING CONSTRUCTION. FOR ESTIMATING PURPOSES, ASSUME THE FOLLOWING:
- SISTERING OF (5) OPEN WEB TRUSSES AT EACH OF THE COMFORT STATION, AUDITORIUM, EXHIBIT SPACE, AND ADMIN WING WITH FULL LENGTH 11 1/4" LVL MEMBERS (20 TOTAL)
- INSTALLATION OF HANGERS AT BEARING CONDITION OF AUDITORIUM OPEN WEB TRUSSES TO THE EXHIBIT SPACE ROOF

SCALE: Ⓐ 8 0 8 16 SCALE OF FEET
TRUE PLAN

COLORADO LICENSED IAN R. GLASER 42148 PROFESSIONAL ENGINEER 01/16/2026

AE FIRM PRIME: OTAK, INC. REDMOND, WA SUBCONTRACTOR: JVA, INC. BOULDER, CO	DESIGNED: CBB DRAWN: DJM / CBB TECH REVIEW: IRG DATE: 01/16/2026	SUB SHEET NO. S102	TITLE OF SHEET ROOF FRAMING PLAN REHABILITATE KAWUNEECHE VISTOR CENTER ROCKY MOUNTAIN NATIONAL PARK	DRAWING NO. 121 165639 PMIS/PKG NO. 326235 SHEET 91 OF 177

1/8/2026 3:36:03 PM Autodesk Docs://2024-260 NPS ROMO Kawuneeche VC DD-CA wOtak/241132 ROMO KVC JVA Struct S24.rvt

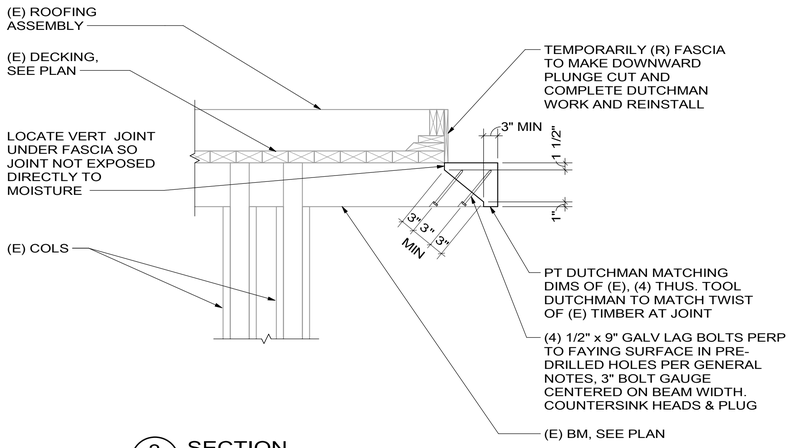

3 S601 **SECTION**

SCALE Ⓐ

WHERE DETERIORATION IS MINOR AND COMPLETELY OUTBOARD OF ROOF EDGE. ASSUME (2) LOCATIONS

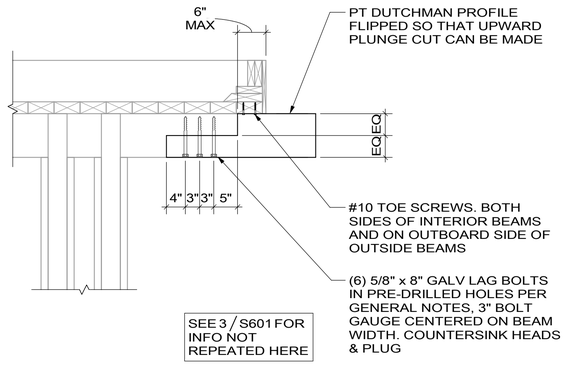

4 S601 **SECTION**

SCALE Ⓐ

WHERE DETERIORATION EXTENDS UNDER ROOF EDGE. ASSUME (2) LOCATIONS

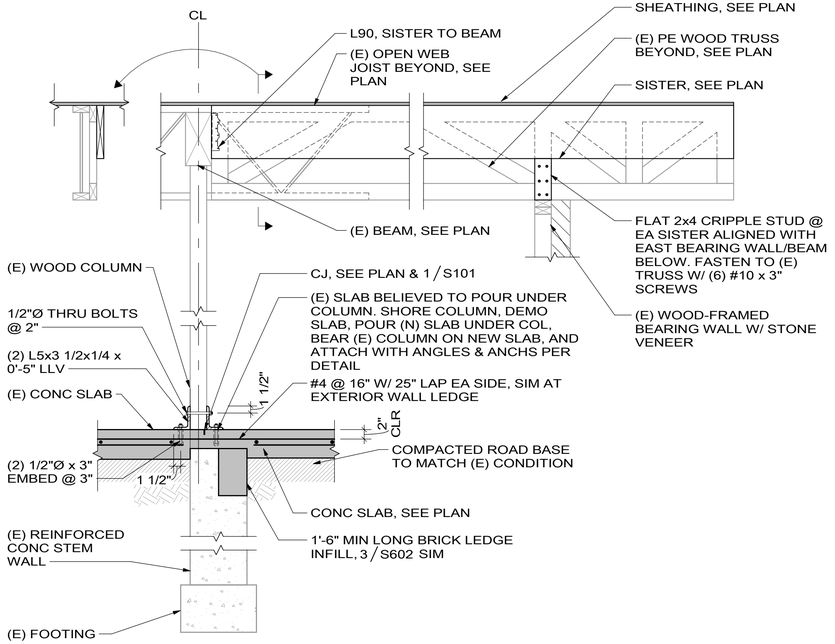

1 S601 **SECTION**

SCALE Ⓐ

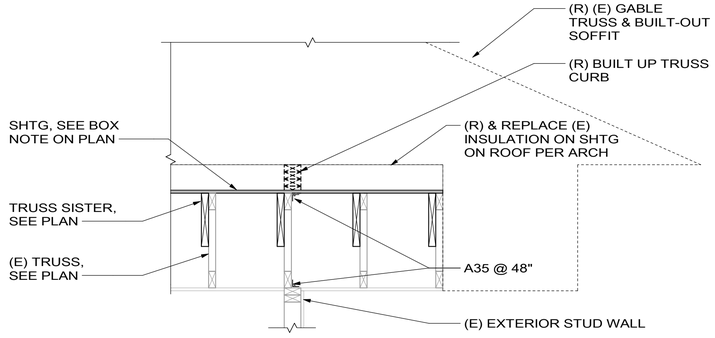

2 S601 **SECTION**

SCALE Ⓐ

SCALE: Ⓐ 1 0 1 2 3

SCALE OF FEET

COLORADO LICENSED IAN R. GLASER 42148 PROFESSIONAL ENGINEER 01/16/2026

AE FIRM PRIME: OTAK, INC. REDMOND, WA SUBCONTRACTOR: JVA, INC. BOULDER, CO	DESIGNED: CBB DRAWN: DJM / CBB TECH REVIEW: IRG DATE: 01/16/2026	SUB SHEET NO. S601	TITLE OF SHEET COMFORT STATION SECTIONS REHABILITATE KAWUNEECHE VISTOR CENTER ROCKY MOUNTAIN NATIONAL PARK	DRAWING NO. 121 165639 PMIS/PKG NO. 326235 SHEET 92 OF 177

1/22/2026 4:22:28 PM Autodesk Docs://2024-260 NPS ROMO Kawuneeche VC DD-CA wOtak/241132 ROMO KVC JVA Struct S24.rvt

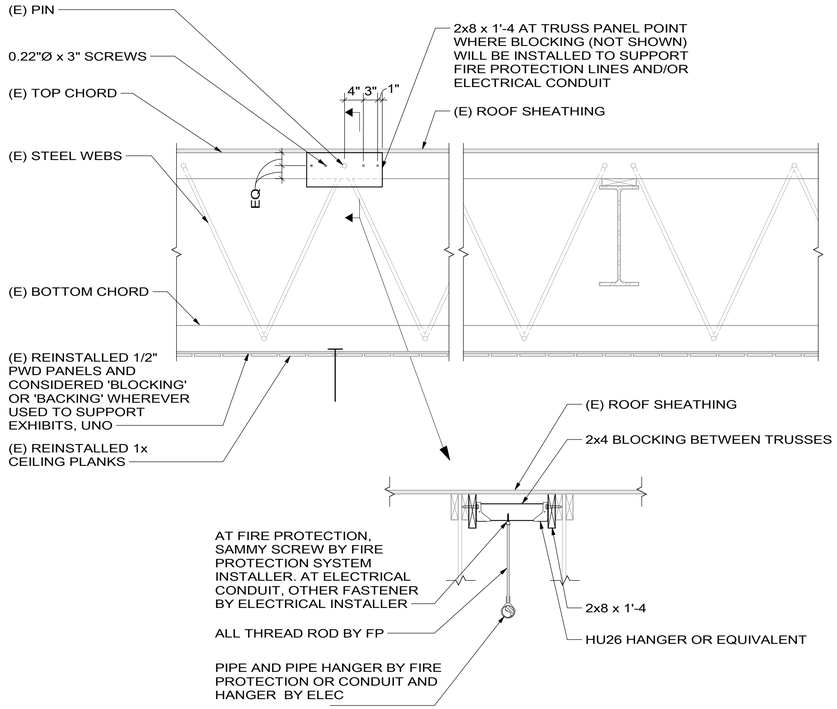

5 SECTION S602
SCALE A

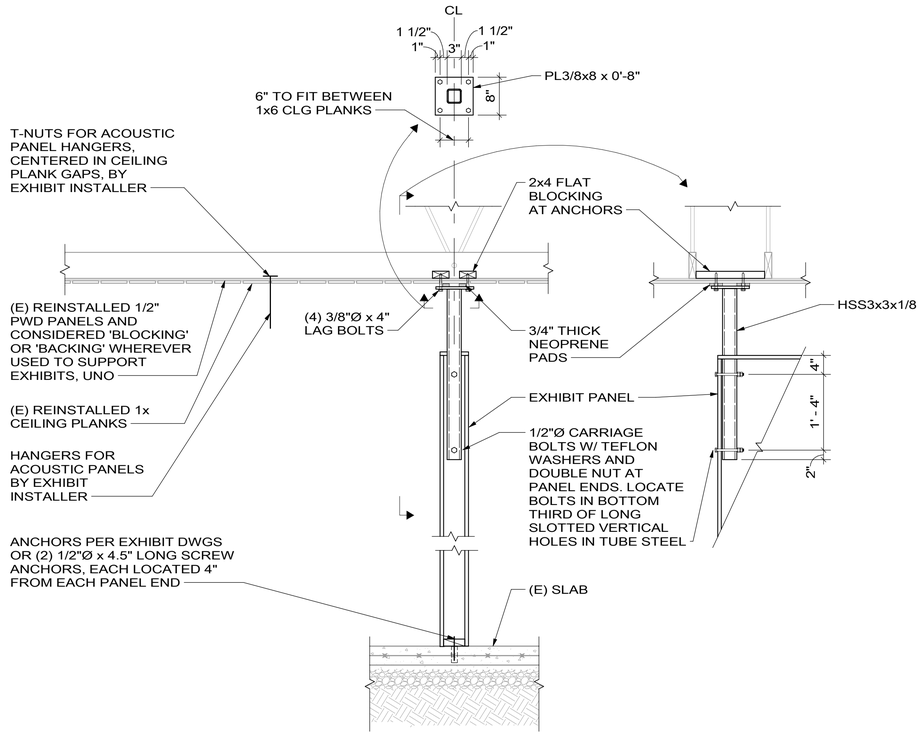

6 SECTION S602
SCALE A

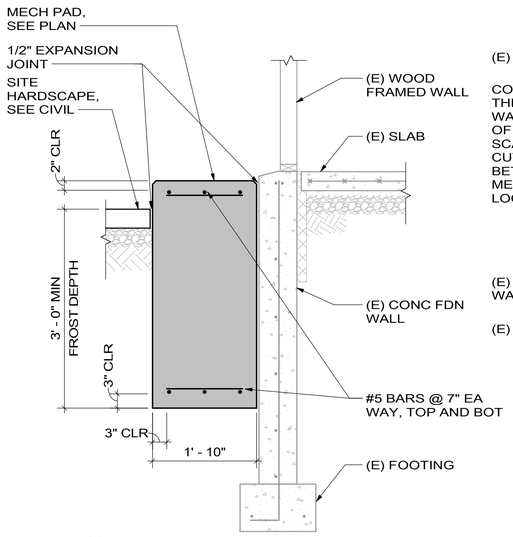

1 SECTION S602
SCALE A

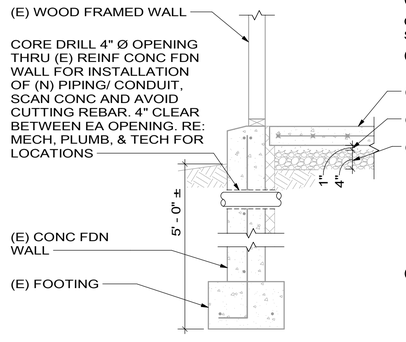

2 SECTION S602
SCALE A

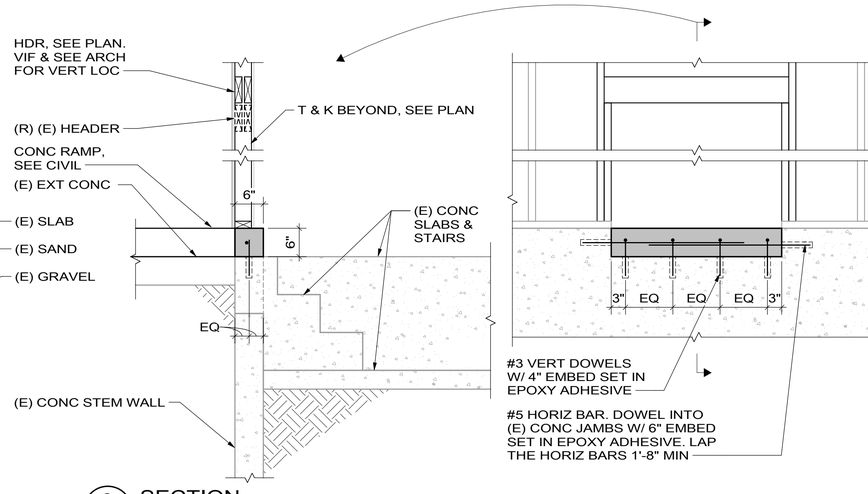

3 SECTION S602
SCALE A

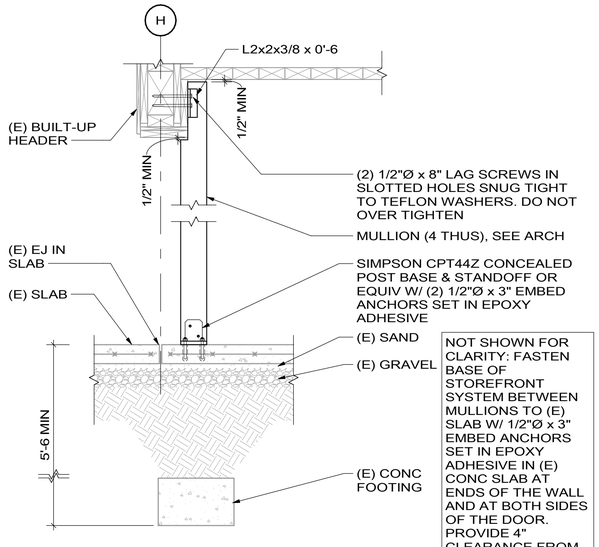

4 SECTION S602
SCALE A

SCALE: A
1 0 1 2 3
SCALE OF FEET

COLORADO LICENSED
IAN R. GLASER
42148
PROFESSIONAL ENGINEER
01/16/2026

AE FIRM PRIME: OTAK, INC. REDMOND, WA SUBCONTRACTOR: JVA, INC. BOULDER, CO	DESIGNED: CBB CADD DJM / CBB TECH REVIEW: IRG DATE: 01/16/2026	SUB SHEET NO. S602	TITLE OF SHEET ADMIN & VC SECTIONS REHABILITATE KAWUNEECHE VISTOR CENTER ROCKY MOUNTAIN NATIONAL PARK	DRAWING NO. 121 165639 PMIS/PKG NO. 326235 SHEET 93 OF 177

1/8/2026 3:36:04 PM Autodesk Docs://2024-260 NPS ROMO Kawuneeche VC DD-CA wOtak/241132 ROMO KVC JVA Struct S24.rvt

MECHANICAL NOTES

1. GENERAL

1. ALL WORK SHALL BE IN ACCORDANCE WITH SMACNA STANDARDS AND SPECIFICATIONS, AND AUTHORITY HAVING JURISDICTION.

2. THESE DRAWINGS ARE DIAGRAMMATIC IN NATURE AND NOT INTENDED TO SHOW ALL TRANSITIONS, OFFSETS, ETC. CONTRACTOR SHALL FIELD VERIFY EXISTING CONDITIONS AND PROVIDE ALL NECESSARY FITTINGS TO COMPLETE THE INTENT OF THE DRAWINGS. ANY DISCREPANCIES BETWEEN DRAWINGS AND FIELD CONDITIONS SHALL BE REPORTED TO THE CONTRACTING OFFICER FOR RESOLUTION. CONTRACTOR MAY LOCATE MECHANICAL EQUIPMENT DIFFERENTLY THAN SHOWN ON DRAWINGS DUE TO CONFLICTS, AS LONG AS FUNCTION AND/OR APPEARANCE ARE NOT AFFECTED.

3. COORDINATE SPACE REQUIREMENTS, SUPPORTS, AND INSTALLATION OF MECHANICAL WORK, WHICH ARE INDICATED DIAGRAMMATICALLY ON THE DRAWINGS. FOLLOW ROUTING SHOWN FOR PIPES AND DUCTS AS CLOSELY AS PRACTICABLE; PLACE RUNS PARALLEL WITH LINES OF BUILDING. UTILIZE SPACES EFFICIENTLY TO MAXIMIZE ACCESSIBILITY FOR OTHER INSTALLATIONS, FOR MAINTENANCE, AND FOR REPAIRS.

4. COMPLY WITH MANUFACTURER'S INSTRUCTIONS INCLUDING EACH STEP IN SEQUENCE. SHOULD MANUFACTURERS' INSTRUCTIONS CONFLICT WITH THE DRAWINGS, REQUEST CLARIFICATION FROM THE CONTRACTING OFFICER BEFORE PROCEEDING.

5. DUCT SIZES ARE INSIDE DIMENSION.

6. CONTRACTOR SHALL REVIEW THESE DOCUMENTS CAREFULLY. CONTRACTOR SHALL CONTACT THE CONTRACTING OFFICER FOR RESOLUTION OF ANY DISCREPANCIES, OMISSIONS, OR CLARIFICATIONS, BEFORE SOLICITATION DATE. IN THE EVENT THAT AN INTERPRETATION OF SOLICITATION DOCUMENTS IS NECESSARY AFTER THE SOLICITATION DATE, THE DECISION OF THE CONTRACTING OFFICER SHALL BE FINAL AND BINDING.

7. PRODUCT DELIVERY, STORAGE, AND HANDLING: PROVIDE EQUIPMENT AND PERSONNEL TO HANDLE PRODUCTS BY METHODS TO PREVENT DAMAGE. PROMPTLY INSPECT SHIPMENTS TO ENSURE THAT PRODUCTS ARE UNDAMAGED. STORE AND PROTECT PRODUCTS IN ACCORDANCE WITH MANUFACTURERS' INSTRUCTIONS.

8. ALL REMOVED EQUIPMENT SHALL REMAIN THE PROPERTY OF THE FEDERAL GOVERNMENT AND SHALL BE STORED OR DISPOSED OF PER THE DIRECTION OF THE CONTRACTING OFFICER.

9. THE CONTRACTOR IS RESPONSIBLE FOR THE COSTS OF ALL CHANGE ORDERS, WHICH THE NATIONAL PARK SERVICE (NPS) AND THE CONTRACTING OFFICER HAVE NOT APPROVED IN WRITING PRIOR TO THE EXECUTION OF THE ASSOCIATED WORK.

10. IN THE CASE OF A CONFLICT, UNLESS OTHERWISE NOTED, KEYNOTES ON MECHANICAL PLANS SHALL SUPERCEDE ANY GENERAL NOTES ON THE PLANS.

11. CONTRACTOR SHALL COORDINATE WORK WITH OTHER TRADES AND NOTIFY THE CONTRACTING OFFICER IF ANY CONFLICTS OCCUR.

12. THERMOSTAT LOCATIONS TO BE COORDINATED WITH NATIONAL PARK SERVICE, VERIFIED BY THE CONTRACTING OFFICER. THERMOSTAT HEIGHTS SHALL BE 48" AFF TO MATCH LIGHTSWITCH HEIGHTS AND INSTALLED TO MEET ICC A117.1. CONTRACTOR TO CALIBRATE ALL THERMOSTATS SHOWN ON THIS PLAN. IT SHALL BE THE GENERAL CONTRACTOR'S RESPONSIBILITY TO ENSURE THAT ALL EXISTING THERMOSTATS REMAIN INTACT DURING DEMOLITION. HEATING THERMOSTATS MUST REMAIN OPERATIONAL AT ALL TIMES. IF REQUIRED FOR BETTER PROTECTION, THERMOSTATS MAY BE TEMPORARILY MOUNTED IN THE CEILING PLENUM DURING DEMOLITION.

13. PROVIDE VOLUME DAMPERS AT ALL DIFFUSER TAKEOFFS.

14. ALL TAKEOFFS, RUNOUTS, AND FLEX DUCTWORK TO DIFFUSERS SHALL BE THE SAME SIZE AS DIFFUSER INLET UNLESS OTHERWISE NOTED.

15. MECHANICAL CONTRACTOR TO CHECK OPERATION AND CONDITION OF ALL EXISTING MECHANICAL EQUIPMENT WITHIN THE CONFINES OF THIS SPACE AND PREPARE A WRITTEN LIST OF ANY DEFICIENCIES IN EQUIPMENT OPERATION OR CONDITION. LIST SHALL BE SUBMITTED TO CONTRACTING OFFICER TWO WEEKS AFTER THE AWARD OF THE CONTRACT.

16. THERMOSTAT CONTROL LINES SHALL BE SUPPORTED AT INTERVALS NOT TO EXCEED 4'-0".

17. PROVIDE DIELECTRIC UNIONS AT CONNECTIONS BETWEEN DISSIMILAR METALS, I.E., IRON VALVES AND COPPER TUBING.

18. PROVIDE PIPE HANGERS OF THE SAME MATERIAL AS THE PIPING SYSTEM OR USE COATED HANGERS.

19. PROVIDE BALL VALVES AND UNIONS ON ALL LINES TO EQUIPMENT FOR ISOLATION AND REMOVAL.

20. ALL EXISTING DUCTWORK SHALL BE SCOPED TO CHECK CONDITION AND THOROUGHLY CLEANED. SEE SPECIFICATION 23 01 30.52 FOR ADDITIONAL DETAILS.

MECHANICAL LEGEND

PIPING SERVICES

- G — NATURAL GAS
- CD — CONDENSATE DRAIN
- RS — REFRIGERANT SUCTION
- RL — REFRIGERANT LIQUID

PIPING SYSTEM COMPONENTS

- ELBOW DOWN
- ELBOW UP
- TEE DOWN
- TEE UP
- CAP
- UNION
- FLEXIBLE CONNECTION
- DRAIN VALVE
- STRAINER
- FS — FLOW SENSOR
- S — TEMPERATURE SENSOR
- AUTOMATIC AIR CENT
- GAUGE
- THERMOMETER
- MANUAL AIR VENT
- P&T TAP
- IN LINE PUMP
- M — METER
- T — THERMOSTAT
- P — PRESSURE SENSOR
- CO_2 — CARBON DIOXIDE SENSOR
- CO — CARBON MONOXIDE SENSOR

HVAC SYSTEM COMPONENTS

- 18X12 — RECTANGULAR DUCT
- 10"Ø — ROUND DUCT
- MANUAL DAMPER
- MOTORIZED DAMPER (M)
- RECT. SUPPLY DUCT
- RECT. RETURN DUCT
- ECCENTRIC REDUCER
- DUCT SLOPE (DN)
- SUPPLY DIFFUSER/RETURN GRILLE
- SUPPLY DIFFUSER W/ FLEX CONNECTION
- SLOT DIFFUSER
- FIRE/SMOKE DAMPER (F/S)
  SMOKE DAMPER (SD)
- SCHEDULE DESIGNATION (DASH FOR EXISTING GRD)
- A — 10"Ø — 375 CFM — DIFFUSER CALLOUT
- NECK SIZE
- AIR FLOW

VALVES

- GATE VALVE
- BALL VALVE
- PLUG VALVE
- CHECK VALVE
- 2WAY ATC VALVE
- 3WAY ATC VALVE
- PRESSURE REDUCING VALVE
- SAFETY RELIEF VALVE
- BACK FLOW PREVENTER
- BALANCING VALVE
- BUTTERFLY VALVE

DRAWING NOTATION

- NEW TO EXISTING
- NEW WORK
- EXISTING ITEMS
- EXISTING ITEMS TO BE DEMOLISHED

APPLICABLE CODES:

2024 INTERNATIONAL MECHANICAL CODE (IMC)
2024 INTERNATIONAL BUILDING CODE (IBC)
2024 INTERNATIONAL PLUMBING CODE (IPC)
2024 INTERNATIONAL FUEL GAS CODE (IFGC)
2024 INTERNATIONAL EXISTING BUILDING CODE (IEBC)
2024 INTERNATIONAL ENERGY CONSERVATION CODE (IECC)
ASHRAE 90.1-2022
NPS SUSTAINABILITY GUIDELINES

MECHANICAL ABBREVIATIONS

AC	AIR CONDITIONER
A/C	ABOVE CEILING
ADJ	ADJUSTABLE
AFF	ABOVE FINISHED FLOOR
AHJ	AUTHORITY HAVING JURISDICTION
BAS	BUILDING AUTOMATION SYSTEM
B/C	BELOW CEILING
BTU	BRITISH THERMAL UNIT
BLDG	BUILDING
BTUH	BRITISH THERMAL UNIT PER HOUR
B/S	BELOW SLAB
CHWS	CHILLED WATER SUPPLY
CHWR	CHILLED WATER RETURN
CA	COMPRESSED AIR
CD	CONDENSATE DRAIN
CFH	CUBIC FEET PER HOUR
CFM	CUBIC FEET PER MINUTE
CWS	CONDENSER WATER SUPPLY
CWR	CONDENSER WATER RETURN
Cx	COMMISSIONING
(D)	DEMOLISH
DIA	DIAMETER
DN	DOWN
DX	DIRECT EXPANSION
(E)	EXISTING
EA	EXHAUST AIR
FFA	FROM FLOOR ABOVE
FFB	FROM FLOOR BELOW
FD	FIRE DAMPER
FPM	FEET PER MINUTE
F/S	COMBINATION FIRE+SMOKE DAMPER
GPM	GALLONS PER MINUTE
HPC	HIGH PRESSURE CONDENSATE RETURN
HPS	HIGH PRESSURE STEAM SUPPLY
HWR	HEATING WATER RETURN
HWS	HEATING WATER SUPPLY
I.D.	INSIDE DIAMETER
LPC	LOW PRESSURE CONDENSATE RETURN
LPG	LIQUEFIED PROPANEPETROLEUM GAS (PROPANE)
LPS	LOW PRESSURE STEAM SUPPLY
MAX	MAXIMUM
MIN	MINIMUM
(N)	NEW

MECHANICAL SHEET LIST

NUMBER	SHEET NAME
M000	MECHANICAL LEGENDS AND NOTES
M101	OVERALL DEMO MECHANICAL FLOOR PLAN
M111	OVERALL MECHANICAL FLOOR PLAN
M112	OVERALL MECHANICAL ROOF PLAN
M300	MECHANICAL SECTIONS
M400	MECHANICAL DEMO ENLARGED PLANS
M401	MECHANICAL ENLARGED PLANS
M500	MECHANICAL DETAILS
M600	MECHANICAL SCHEDULES
M700	MECHANICAL CONTROLS SEQUENCES
M800	MECHANICAL CALCS AND COMCHECK
M801	MECHANICAL CALCS AND COMCHECK

MECHANICAL ABBREVIATIONS CONT.

NG	NATURAL GAS
NIC	NOT IN CONTRACT
N.O.	NORMALLY OPEN
N.C.	NORMALLY CLOSED
OA	OUTSIDE AIR
O.C.	ON CENTER
O.D.	OUTSIDE DIAMETER
PSIA	POUNDS PER SQUARE INCH (ABSOLUTE)
PSIG	POUNDS PER SQUARE INCH (GAUGE)
(R)	RELOCATED
RA	RETURN AIR
RE:__	REFERENCE ____
REQ	REQUIRED/REQUIREMENT
RL	REFRIGERANT LIQUID
RS	REFRIGERANT SUCTION
SA	SUPPLY AIR
SD	SMOKE DAMPER
SF	SQUARE FEET
SL	SEA LEVEL
S.S.	STAINLESS STEEL
STD	STANDARD
TA	TRANSFER AIR
TFA	TO FLOOR ABOVE
TFB	TO FLOOR BELOW
TYP	TYPICAL
UNO	UNLESS NOTED OTHERWISE
VA	VENTILATION AIR

COLORADO LICENSED
JEWETT JAMES RUSSELL
55863
01/16/26
PROFESSIONAL ENGINEER

AE FIRM PRIME: OTAK, INC. REDMOND, WA SUBCONTRACTOR: 360 ENGINEERING, INC. GOLDEN, CO	DESIGNED: JEG/MM CADD JEG/MM TECH REVIEW: SJR/DMD DATE: 01/16/2026	SUB SHEET NO. M000	TITLE OF SHEET MECHANICAL LEGENDS AND NOTES REHABILITATE KAWUNEECHE VISITOR CENTER ROCKY MOUNTAIN NATIONAL PARK	DRAWING NO. 121 165639 PMIS/PKG NO. 326235 SHEET 94 OF 177

1/7/2026 8:36:22 PM Autodesk Docs://2024-260 NPS ROMO Kawuneeche VC DD-CA wOtak/ROMO KVC Mech-Plumb.rvt

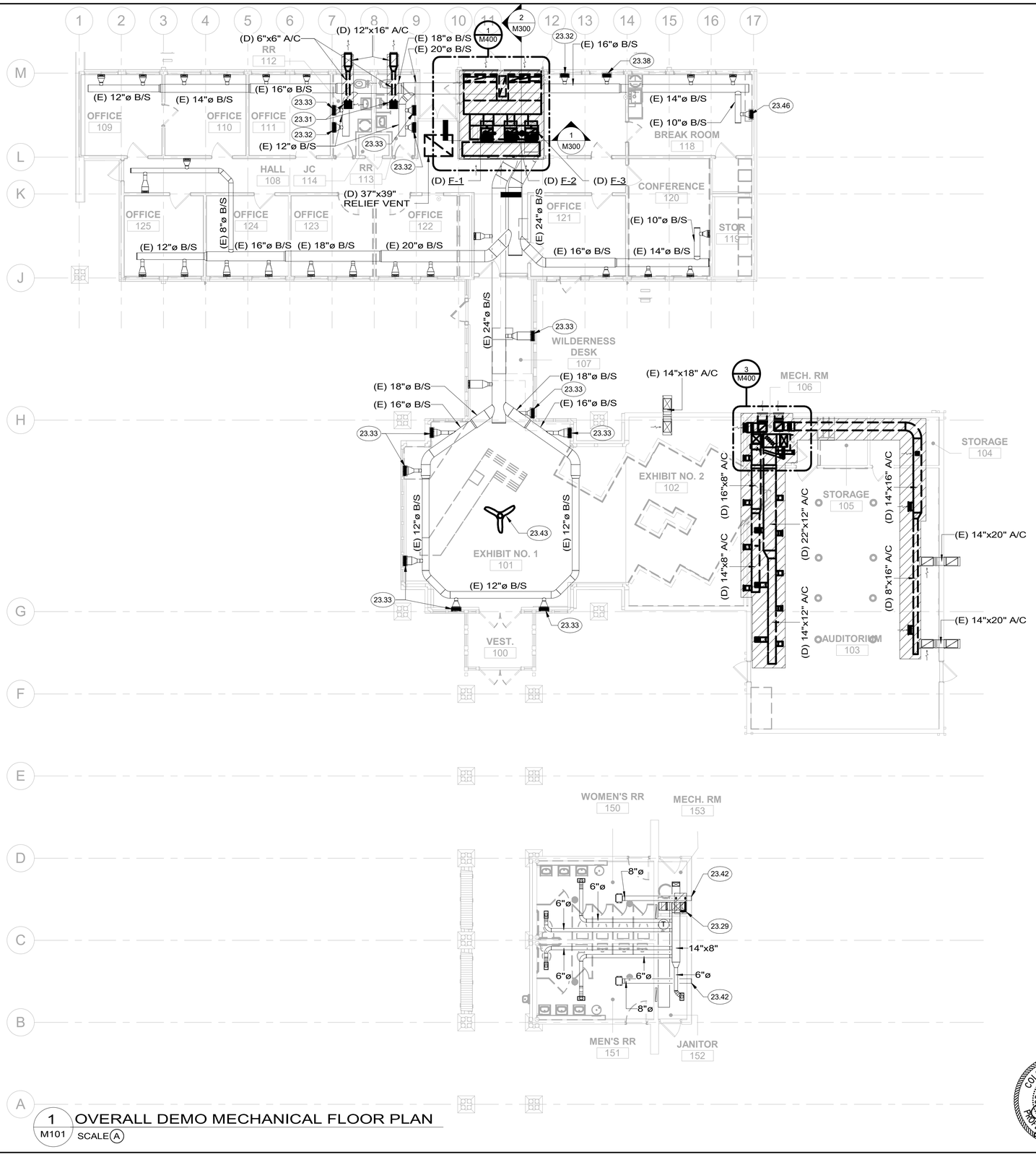

1 M101 OVERALL DEMO MECHANICAL FLOOR PLAN
SCALE A

GENERAL NOTES:

1. DEMO AND REMOVE ALL MECHANICAL EQUIPMENT, DUCTWORK, PIPING, AIR DISTRIBUTION, ETC. IN HATCHED REGIONS UNLESS NOTED OTHERWISE.
2. CONTRACTOR SHALL CLEAN ALL EXISTING TO REMAIN EXPOSED GRILLE FACES.
3. ALL EXISTING DUCTWORK SHALL BE SCOPED TO CHECK CONDITION AND THOROUGHLY CLEANED. ANY DAMAGED DUCTWORK SHALL BE RESTORED AND REPAIRED ACCORDING TO NADCA ACR, RESTORATION AND REPAIR OF MECHANICAL SYSTEMS SECTION.

(#) KEYNOTES:

23.29 EXISTING FURNACE SHALL BE REMOVED. ALL ASSOCIATED DUCTWORK, AIR DISTRIBUTION, ETC. SHALL REMAIN. MAKE READY FOR CONNECTION TO NEW FURNACE. PROTECT DUCT OPENINGS FROM DUST AND DEBRIS DURING CONSTRUCTION. SEE NEW WORK PLANS, SHEET M111.

23.31 EXISTING EXHAUST FAN AND ASSOCIATED DUCTWORK TO BE REMOVED. EXISTING WALL LOUVER SHALL REMAIN FOR CONNECTION TO NEW DUCTWORK. SEE NEW WORK PLANS, SHEET M111.

23.32 EXISTING FLOOR GRILLE SHALL BE REMOVED, CLEANED, AND SALVAGED. DUCTWORK SHALL BE SEALED AT THE SLAB PENETRATION.

23.33 EXISTING FLOOR GRILLE SHALL BE REMOVED, CLEANED AND SALVAGED. MAKE DUCTWORK READY FOR CONNECTION TO NEW FLOOR GRILLE. SEE NEW WORK PLANS, SHEET M111. PROTECT OPENING FROM DUST AND DEBRIS DURING CONSTRUCTION

23.38 EXISTING FLOOR GRILLE SHALL BE CAREFULLY REMOVED AND REINSTALLED AT THE NEW LOCATION. SEE NEW WORK PLANS, SHEET M111. DUCTWORK SHALL BE SEALED AT THE SLAB PENETRATION.

23.42 REMOVE EXISTING WALL CAP TO ALLOW FOR WORK TO FASCIA. MAKE EXISTING DUCTWORK READY FOR CONNECTION TO NEW WALL CAP.

23.43 EXISTING CEILING FAN TO BE REMOVED. CEILING PENETRATION SHALL BE MADE READY FOR INSTALLATION OF NEW CEILING FAN.

23.46 EXISTING FLOOR GRILLE SHALL BE REMOVED. DUCTWORK CONNECTION SHALL BE MADE READY FOR CONNECTION TO NEW GRILLE. SEE NEW WORK PLANS.

SCALE: A 8 0 8 16 SCALE OF FEET

TRUE PLAN

COLORADO LICENSED JENNIFER JAMES ROSE 55863 01/16/26 PROFESSIONAL ENGINEER

AE FIRM PRIME: OTAK, INC. REDMOND, WA SUBCONTRACTOR: 360 ENGINEERING, INC. GOLDEN, CO	DESIGNED: JEG/MM DRAWN: JEG/MM TECH REVIEW: SJR/DMD DATE: 01/16/2026	SUB SHEET NO. M101	TITLE OF SHEET OVERALL DEMO MECHANICAL FLOOR PLAN REHABILITATE KAWUNEECHE VISITOR CENTER ROCKY MOUNTAIN NATIONAL PARK	DRAWING NO. 121 165639 PMIS/PKG NO. 326235 SHEET 95 OF 177

1/7/2026 8:36:32 PM Autodesk Docs://2024-260 NPS ROMO Kawuneeche VC DD-CA wOtak/ROMO KVC Mech-Plumb.rvt

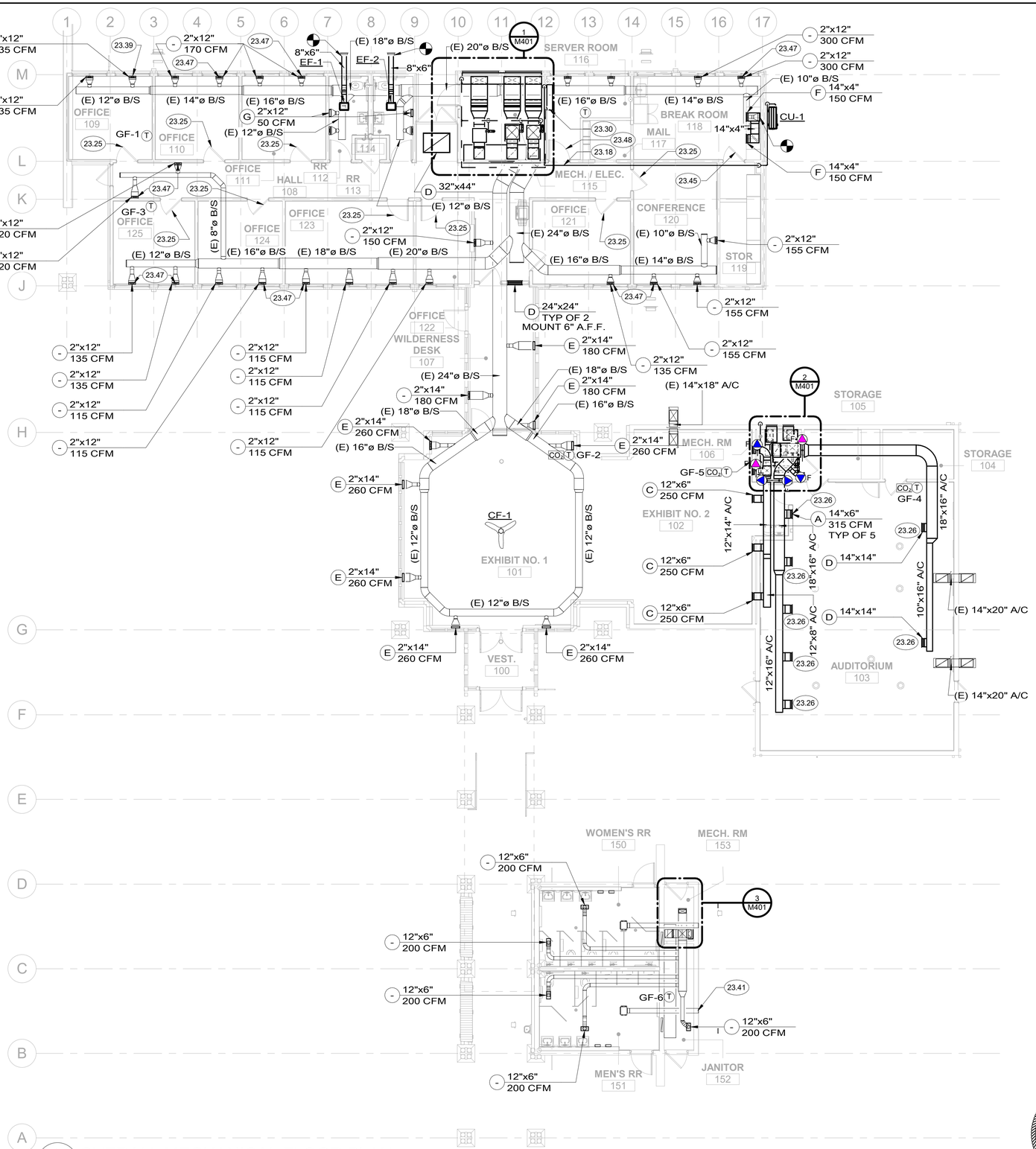

1 M111 OVERALL MECHANICAL FLOOR PLAN
SCALE A

GENERAL NOTES:

1. ALL EXISTING DUCTWORK SHALL BE SCOPED TO CHECK CONDITION AND THOROUGHLY CLEANED. ANY DAMAGED DUCTWORK SHALL BE RESTORED AND REPAIRED ACCORDING TO NADCA ACR, RESTORATION AND REPAIR OF MECHANICAL SYSTEMS SECTION.

KEYNOTES:

23.18 SIZE REFRIGERANT LINES PER MANUFACTURER'S RECOMMENDATIONS. ROUTE TO CONDENSING UNIT ON GRADE.
23.25 RETURN AIR PATH THROUGH EXISTING LOUVERED DOOR.
23.26 GRILLE MOUNTED ON SOFFIT SIDEWALL.
23.30 MOUNT AS HIGH ON WALL AS POSSIBLE. INSTALL PER MANUFACTURER'S RECOMMENDATIONS AND MAINTAIN ALL MANUFACTURER'S CLEARANCES.
23.39 FLOOR GRILLE IS MISSING AT THIS LOCATION. INSTALL EXISTING, PREVIOUSLY REMOVED FROM NEW SERVER ROOM, FLOOR GRILLE PER MANUFACTURERS INSTRUCTIONS.
23.41 PROVIDE NEW 8" EXHAUST WALL CAP TO MATCH NEW FASCIA.
23.45 DOOR PROVIDED WITH DOOR MOUNTED TRANSFER GRILLES.
23.47 CONTRACTOR SHALL STRAIGHTEN AND REHAB GRILLE TO LIKE-NEW CONDITION. IF STRAIGHTENING AND REHABBING IS NOT FEASIBLE, DAMAGED GRILLES SHALL BE RELOCATED INTO OFFICE AREAS AND STRAIGHT GRILLES SHALL BE RELOCATED IN THE CORRIDOR. SEE 2/M111 FOR ADDITIONAL INFORMATION.
23.48 LOUVERED DOOR FOR COMPLIANCE WITH ASHRAE 15. SEE SHEET M801.

EXISTING FLOOR GRILLE IS CROOKED AT THIS LOCATION. CONTRACTOR SHALL ATTEMPT TO REHAB AND STRAIGHTEN GRILLE. IF GRILLE IS NOT ABLE TO BE STRAIGHTENED, CROOKED GRILLES IN THE CORRIDOR SHALL BE SWAPPED WITH STRAIGHT GRILLES IN THE OFFICES.

2 M111 DAMAGED FLOOR REGISTER EXAMPLE
NOT TO SCALE

SCALE: A 8 0 8 16 SCALE OF FEET
TRUE PLAN

COLORADO LICENSED PROFESSIONAL ENGINEER SPENCER JAMES RIOUX 55863 01/16/26

AE FIRM	DESIGNED:	SUB SHEET NO.	TITLE OF SHEET	DRAWING NO.
PRIME: OTAK, INC. REDMOND, WA	JEG/MM	M111	OVERALL MECHANICAL FLOOR PLAN	121 165639
SUBCONTRACTOR: 360 ENGINEERING, INC. GOLDEN, CO	CADD JEG/MM		REHABILITATE KAWUNEECHE VISITOR CENTER ROCKY MOUNTAIN NATIONAL PARK	PMIS/PKG NO. 326235
	TECH REVIEW: SJR/DMD			SHEET 96 OF 177
	DATE: 01/16/2026			

1/7/2026 8:36:42 PM Autodesk Docs://2024-260 NPS ROMO Kawuneeche VC DD-CA wOtak/ROMO KVC Mech-Plumb.rvt

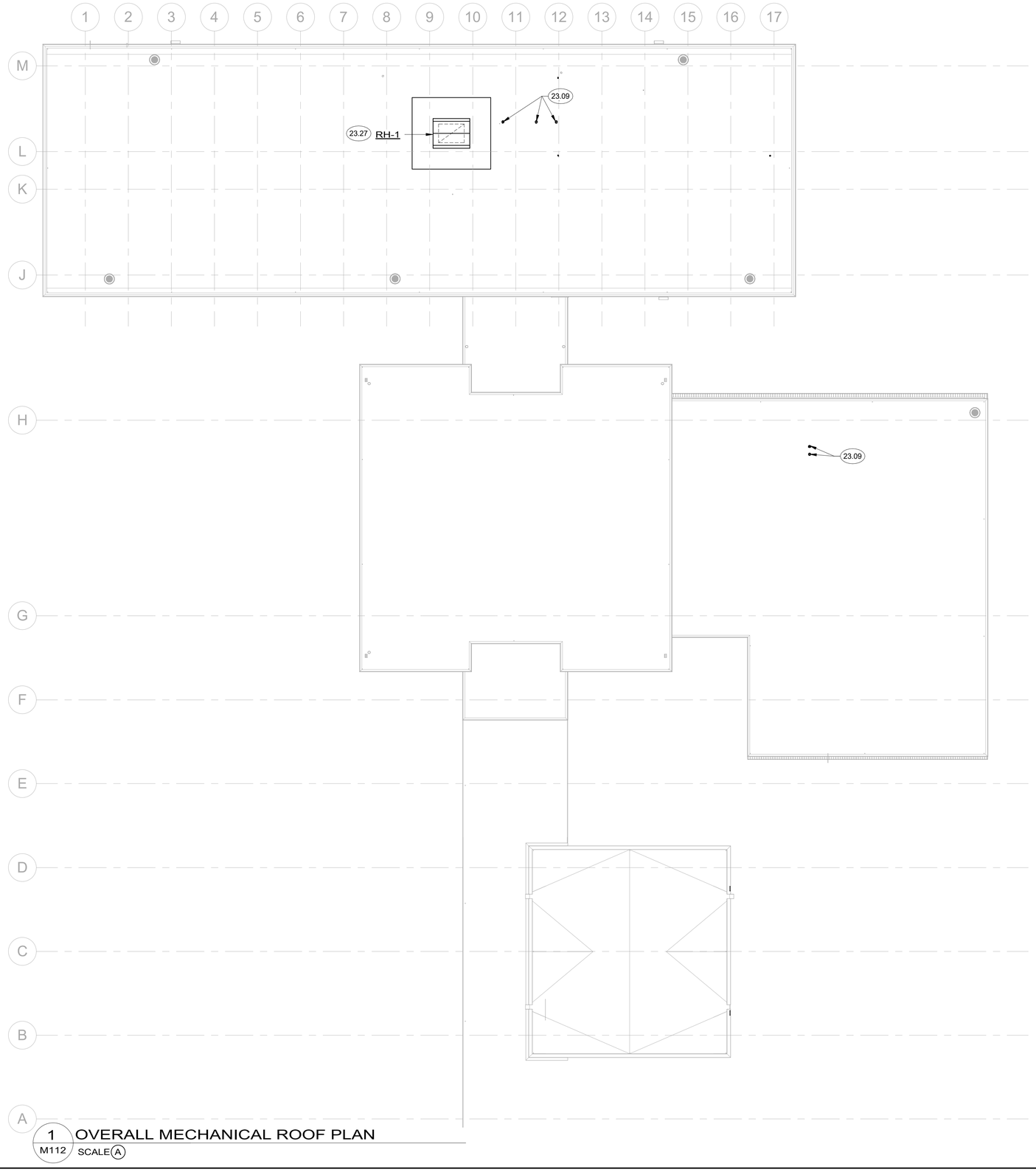

1 M112 OVERALL MECHANICAL ROOF PLAN
SCALE A

GENERAL NOTES:

1. EXISTING ROOFING ADJACENT TO AREAS OF WORK SHALL BE PROTECTED DURING SCOPE OF WORK.

KEYNOTES:

23.09 ROUTE FLUE AND COMBUSTION AIR UP THROUGH ROOF. EXISTING ROOF PENETRATIONS SHALL BE UTILIZED. PATCH ROOF TO MATCH EXISTING IF NECESSARY.

23.27 ROUTE RELIEF DUCT FROM CEILING MOUNTED GRILLE UP TO GRAVITY RELIEF HOOD. INSTALL PER MANUFACTURERS INSTRUCTIONS.

SCALE: A 8 0 8 16 SCALE OF FEET

TRUE PLAN

COLORADO LICENSED PROFESSIONAL ENGINEER SPENCER JAMES RIOUX 55863 01/16/26

AE FIRM PRIME: OTAK, INC. REDMOND, WA SUBCONTRACTOR: 360 ENGINEERING, INC. GOLDEN, CO	DESIGNED: JEG/MM CADD: JEG/MM TECH REVIEW: SJR/DMD DATE: 01/16/2026	SUB SHEET NO. M112	TITLE OF SHEET OVERALL MECHANICAL ROOF PLAN REHABILITATE KAWUNEECHE VISITOR CENTER ROCKY MOUNTAIN NATIONAL PARK	DRAWING NO. 121 165639 PMIS/PKG NO. 326235 SHEET 97 OF 177

1/7/2026 8:36:45 PM Autodesk Docs://2024-260 NPS ROMO Kawuneeche VC DD-CA wOtak/ROMO KVC Mech-Plumb.rvt

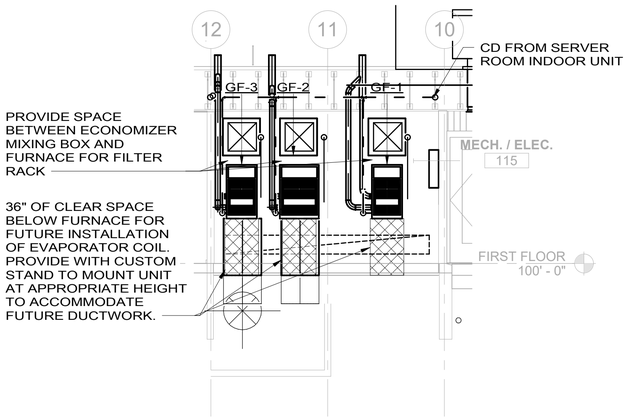

5 M300 020 - MECH/ELEC - NEW WORK SECTION A
SCALE B

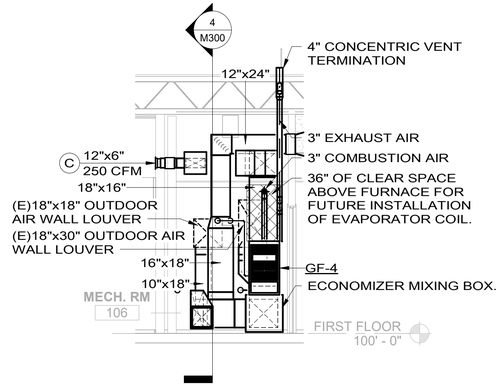

3 M300 031 - MECH. RM - NEW WORK SECTION A
SCALE B

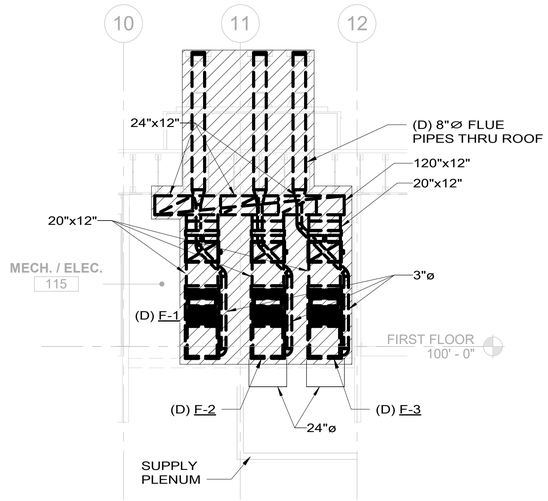

1 M300 020 - MECH/ELEC - DEMO SECTION A
SCALE B

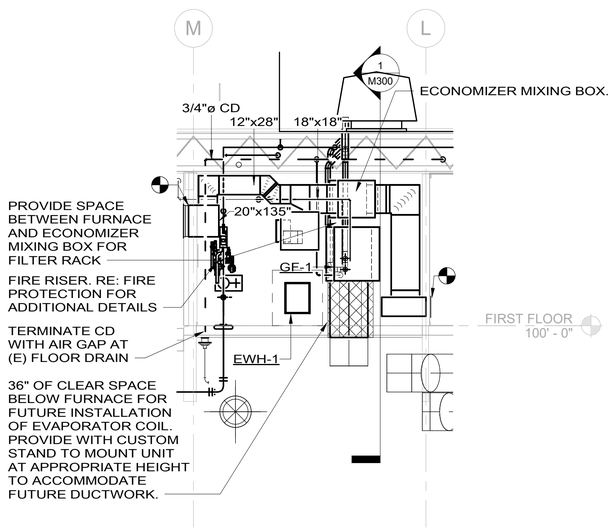

6 M300 020 - MECH/ELEC - NEW WORK SECTION B
SCALE B

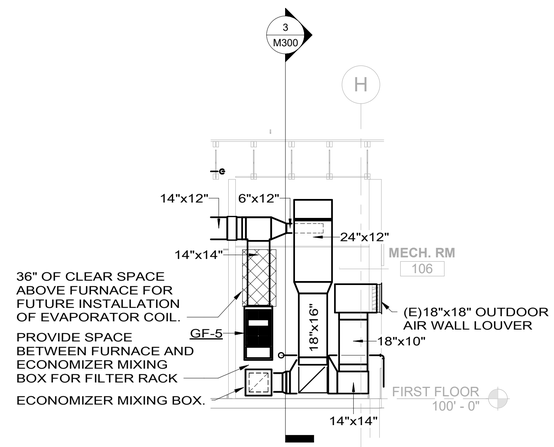

4 M300 031 - MECH. RM - NEW WORK SECTION B
SCALE B

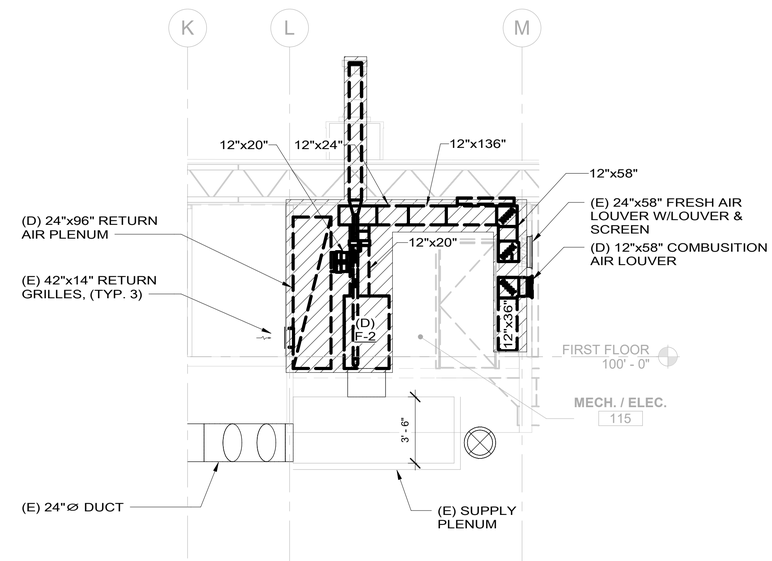

2 M300 020 - MECH/ELEC - DEMO SECTION B
SCALE B

SCALE: B 4 0 4 8
SCALE OF FEET

COLORADO LICENSED PROFESSIONAL ENGINEER
SPENCER JAMES RIOUX
55863
01/16/26

AE FIRM	DESIGNED:	SUB SHEET NO.	TITLE OF SHEET	DRAWING NO.
PRIME: OTAK, INC. REDMOND, WA	JEG/MM	M300	MECHANICAL SECTIONS	121 165639
	CADD JEG/MM			PMIS/PKG NO. 326235
SUBCONTRACTOR: 360 ENGINEERING, INC. GOLDEN, CO	TECH REVIEW: SJR/DMD		REHABILITATE KAWUNEECHE VISITOR CENTER ROCKY MOUNTAIN NATIONAL PARK	SHEET 98 OF 177
	DATE: 01/16/2026			

Autodesk Docs://2024-260 NPS ROMO Kawuneeche VC DD-CA wOtak/ROMO KVC Mech-Plumb.rvt
1/7/2026 8:36:51 PM

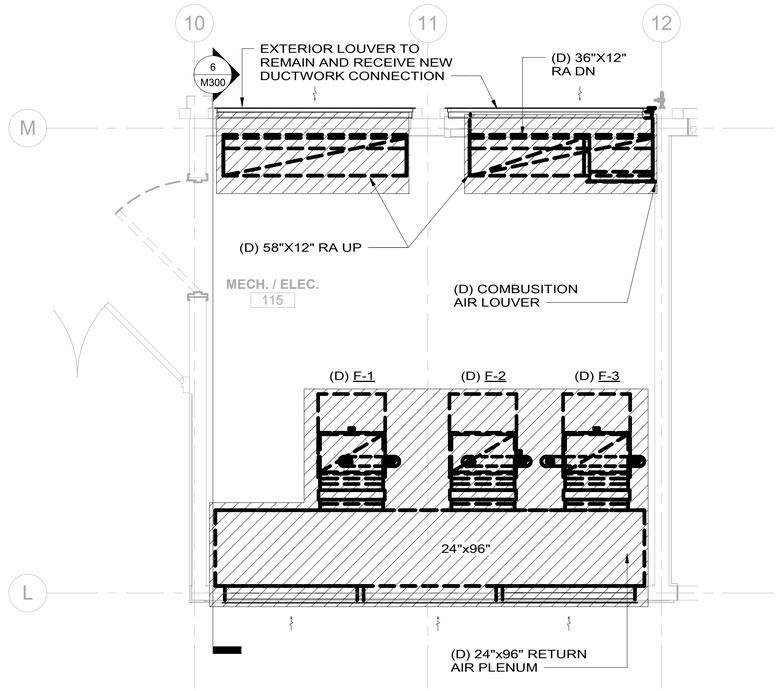

1 M400 115 - MECH ROOM DEMO PLAN AT FLOOR
SCALE D

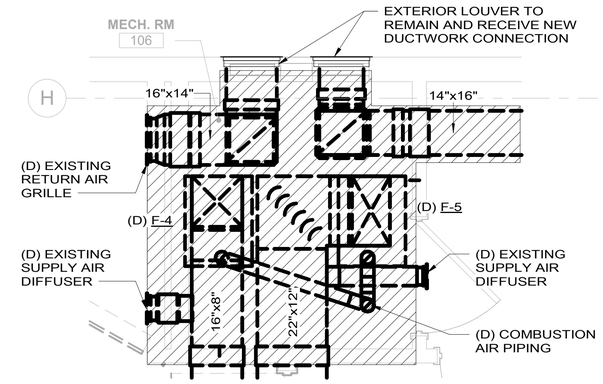

3 M400 106 - MECH ROOM DEMOLITION PLAN
SCALE D

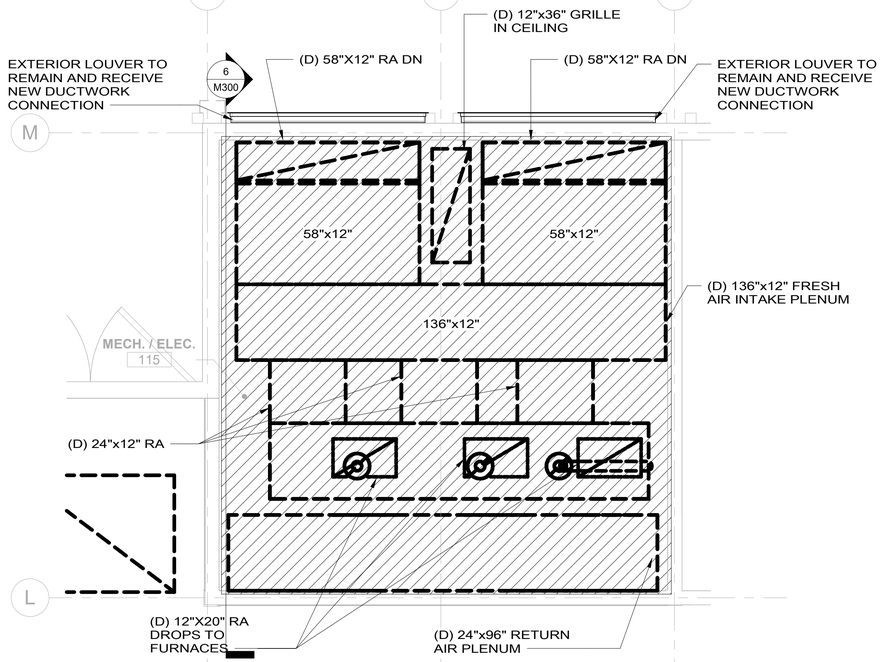

2 M400 115 - MECH ROOM DEMO PLAN AT CEILING
SCALE D

SCALE: D 2 0 2 4
SCALE OF FEET

TRUE PLAN

COLORADO LICENSED PROFESSIONAL ENGINEER
SPENCER JAMES RIOUX
55863
01/16/26

AE FIRM PRIME: OTAK, INC. REDMOND, WA SUBCONTRACTOR: 360 ENGINEERING, INC. GOLDEN, CO	DESIGNED: JEG/MM CADD JEG/MM TECH REVIEW: SJR/DMD DATE: 01/16/2026	SUB SHEET NO. M400	TITLE OF SHEET MECHANICAL DEMO ENLARGED PLANS REHABILITATE KAWUNEECHE VISITOR CENTER ROCKY MOUNTAIN NATIONAL PARK	DRAWING NO. 121 165639 PMIS/PKG NO. 326235 SHEET 99 OF 177

1/7/2026 8:36:57 PM Autodesk Docs://2024-260 NPS ROMO Kawuneeche VC DD-CA wOtak/ROMO KVC Mech-Plumb.rvt

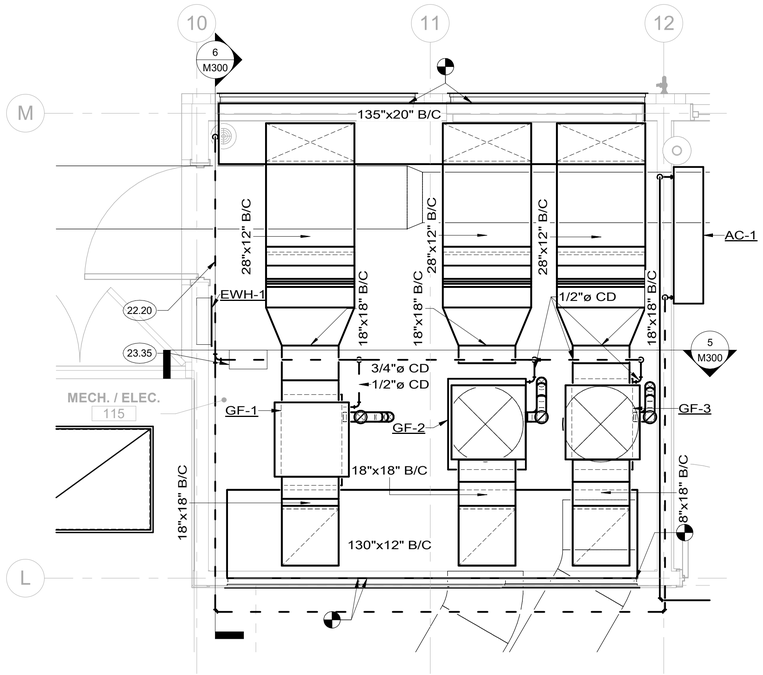

1 M401 115 - MECH/ELEC - MECHANICAL ENLARGED PLAN
SCALE D

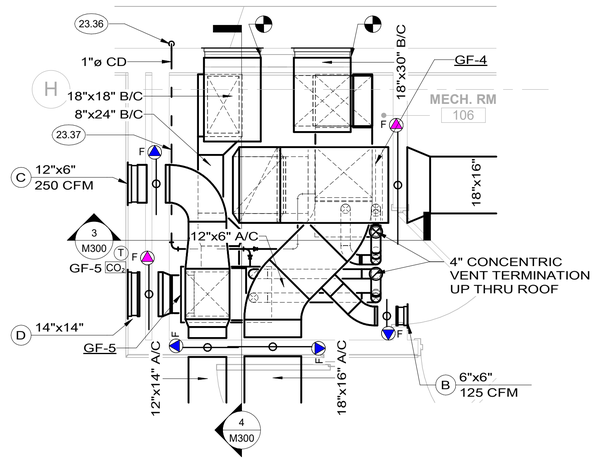

2 M401 106 - MECH. RM - MECHANICAL ENLARGED PLAN
SCALE D

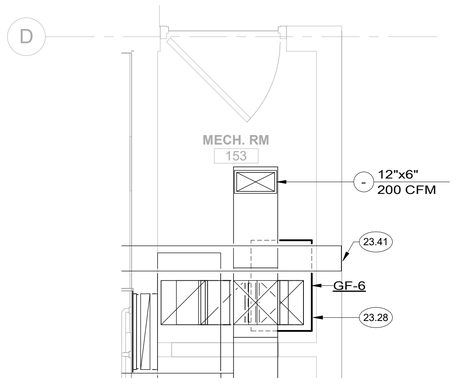

3 M401 153 - MECH. RM ENLARGED PLAN
SCALE D

KEYNOTES:

22.20 ROUTE 3/4"CONDENSATE TO FLOOR DRAIN. TERMINATE VIA AIRGAP AT (E) FLOOR DRAIN.

23.28 NEW FURNACE SHALL BE INSTALLED PER MANUFACTURER INSTRUCTIONS. CONNECT TO EXISTING SUPPLY AND RETURN AIR DUCTWORK.

23.35 INSTALL ACID NEUTRALIZATION KIT IN CONDENSATE DRAIN LINE IN ACCESSIBLE LOCATION.

23.36 DISCHARGE CONDENSATE DRAIN TO GRADE. PIPING ON BUILDING EXTERIOR SHALL BE HEAT TRACED. SEAL PENETRATION ON BUILDING EXTERIOR TO MATCH EXISTING CONDITIONS.

23.37 INSTALL 1/2" CONDENSATE DRAIN WITH ACID NEUTRALIZATION KIT IN ACCESSIBLE LOCATION. DISCHARGE TO GRADE AS SHOWN ON M401.

23.41 PROVIDE NEW 8" EXHAUST WALL CAP TO MATCH NEW FASCIA.

SCALE: D 2 0 2 4
SCALE OF FEET

TRUE PLAN

COLORADO LICENSED PROFESSIONAL ENGINEER
SPENCER JAMES RIOUX
55863
01/16/26

AE FIRM PRIME: OTAK, INC. REDMOND, WA SUBCONTRACTOR: 360 ENGINEERING, INC. GOLDEN, CO	DESIGNED: JEG/MM CADD: JEG/MM TECH REVIEW: SJR/DMD DATE: 01/16/2026	SUB SHEET NO. M401	TITLE OF SHEET MECHANICAL ENLARGED PLANS REHABILITATE KAWUNEECHE VISITOR CENTER ROCKY MOUNTAIN NATIONAL PARK	DRAWING NO. 121 165639 PMIS/PKG NO. 326235 SHEET 100 OF 177

1/7/2026 8:37:03 PM Autodesk Docs://2024-260 NPS ROMO Kawuneeche VC DD-CA wOtak/ROMO KVC Mech-Plumb.rvt

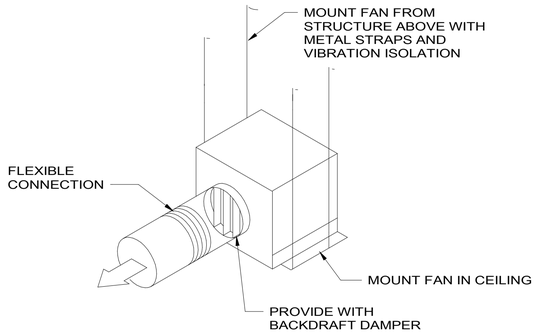

3 M500 CEILING MOUNTED EXHAUST FAN DETAIL
NOT TO SCALE

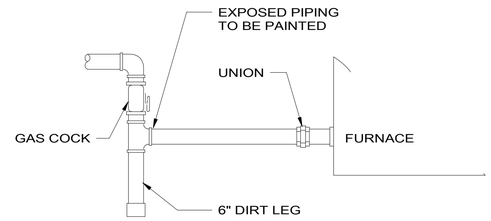

2 M500 GAS EQUIPMENT CONNECTION DETAIL
NOT TO SCALE

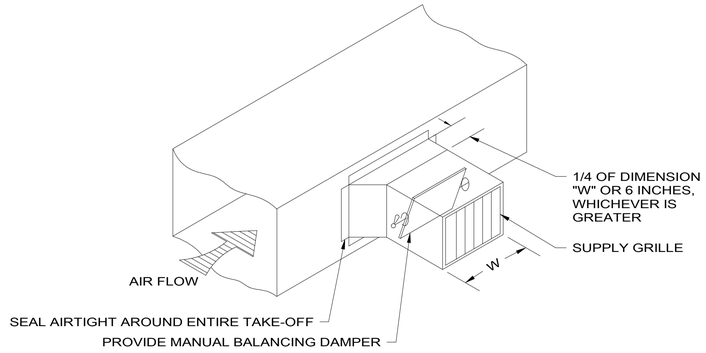

1 M500 45° DUCT TAKE-OFF DETAIL
NOT TO SCALE

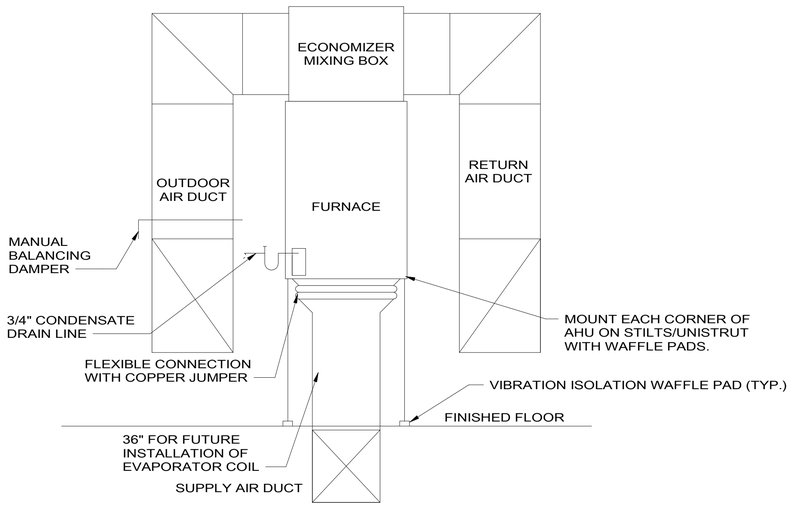

NOTE:
1. THIS DETAIL IS SHOWN AS A SCHEMATIC LAYOUT. SEE FLOOR PLANS FOR DUCTWORK SIZES AND ROUTING.

6 M500 VERTICAL DOWNFLOW FURNACE DETAIL
SCALE A

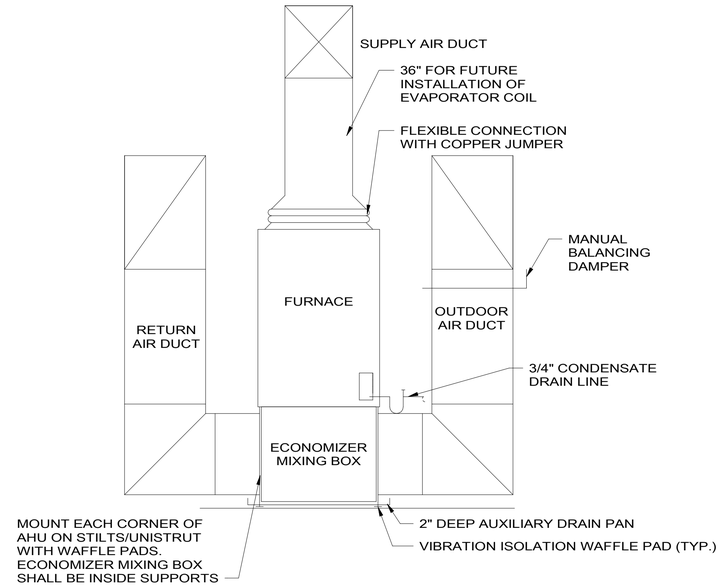

NOTE:
1. THIS DETAIL IS SHOWN AS A SCHEMATIC LAYOUT. SEE FLOOR PLANS FOR DUCTWORK SIZES AND ROUTING.

5 M500 VERTICAL UPFLOW FURNACE DETAIL
NOT TO SCALE

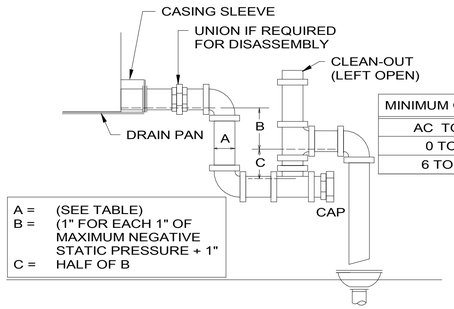

MINIMUM CONDENSATE PIPE SIZE	
AC TONS	MIN. DRAIN SIZE
0 TO 5	3/4"
6 TO 20	1"

A = (SEE TABLE)
B = (1" FOR EACH 1" OF MAXIMUM NEGATIVE STATIC PRESSURE + 1"
C = HALF OF B

4 M500 AC UNIT DRAIN TRAP DETAIL
NOT TO SCALE

Autodesk Docs://2024-260 NPS ROMO Kawuneeche VC DD-CA wOtak/ROMO KVC Mech-Plumb.rvt
1/7/2026 8:37:03 PM

COLORADO LICENSED PROFESSIONAL ENGINEER SPENCER JAMES RIOU 55863 01/16/26

AE FIRM	DESIGNED:	SUB SHEET NO.	TITLE OF SHEET	DRAWING NO.
PRIME: OTAK, INC. REDMOND, WA	JEG/MM	M500	MECHANICAL DETAILS	121 165639
SUBCONTRACTOR: 360 ENGINEERING, INC. GOLDEN, CO	CADD JEG/MM		REHABILITATE KAWUNEECHE VISITOR CENTER ROCKY MOUNTAIN NATIONAL PARK	PMIS/PKG NO. 326235
	TECH REVIEW: SJR/DMD			SHEET 101 OF 177
	DATE: 01/16/2026			

FURNACE SCHEDULE / SALIENT CHARACTERISTICS

GENERAL TAG	BASIS OF DESIGN MANUFACTURER	BASIS OF DESIGN MODEL	LOCATION	SERVICE	TYPE	SUPPLY FAN TOTAL [CFM]	OA [CFM]	ESP [IN. W.C.]	SPEED [RPM]	POWER [HP]	SIZE [HP]	GAS HEATING OAT DB [°F]	EAT DB [°F]	LAT DB [°F]	INPUT @ SEA LEVEL [MBH]	INPUT @ 8841' [MBH]	OUTPUT @ SEA LEVEL [MBH]	OUTPUT @ 8841' [MBH]	TOTAL CAPACITY [MBH]	AFUE [%]	ELECTRICAL VOLTAGE [V]	PHASE	FREQ. [Hz]	MCA [A]	MOCP [A]	PHYSICAL LENGTH [IN]	WIDTH [IN]	HEIGHT [IN]	WEIGHT [LB]	NOTES
GF-1	TRANE	S9X2C100D	115 - MECH/ELEC	NORTH OFFICES	DOWNFLOW	2150	115	0.5	1075	1	1	-17.7	63.4	93.4	65/100	46.8/72	63.1/96.8	45.4/69.7	69.7	95	120	1	60	14.1	15	28.75	21	34	145	1-8
GF-2	TRANE	S9X2D120D	115 - MECH/ELEC	EXHIBIT NO. 1	DOWNFLOW	2250	325	0.5	1075	1	1	-17.7	55.6	89.2	78/120	56.2/86.4	75.7/113.4	54.5/81.6	81.6	96	120	1	60	14.1	15	28.75	24.5	34	156	1-9
GF-3	TRANE	S9X2C100D	115 - MECH/ELEC	SOUTH OFFICES & CORRIDOR	DOWNFLOW	1800	225	0.5	1075	1	1	-17.7	57.3	93.1	65/100	46.8/72	63.1/96.8	45.4/69.7	69.7	95	120	1	60	14.1	15	28.75	21	34	145	1-8
GF-4	TRANE	S9X2C100U	106 - MECH RM.	AUDITORIUM	UPFLOW	1700	405	0.5	1075	1	1	-17.7	47.6	85.5	65/100	46.8/72	63.1/96.8	45.4/69.7	69.7	95	120	1	60	14.1	15	28.75	21	34	139	1-9
GF-5	TRANE	S9X2B060U	106 - MECH RM.	EXHIBIT NO. 2	UPFLOW	1000	180	0.5	1075	3/4	3/4	-17.7	52.6	91.5	39/60	28.1/43.2	37.8/58.3	27.2/42.0	42.0	96	120	1	60	10.3	15	28.75	17.5	34	122	1-9
GF-6	TRANE	S9X2C100U	153 - MECH RM.	COMFORT STATION	UPFLOW	1200	300	0.5	1075	1	1	-17.7	46.6	100.4	65/100	46.8/72	63.1/96.8	45.4/69.7	69.7	96	120	1	60	13.3	15	28.75	21	34	145	1-8

NOTES
1. TWO-STAGE HEATING. CAPACITY RATINGS ARE SHOWN AS "1ST STAGE/2ND STAGE".
2. PROVIDE WITH MERV 13 FILTER.
3. PROVIDE WITH 7-DAY PROGRAMMABLE THERMOSTAT. THERMOSTAT SHALL BE CAPABLE OF CONTROLLING GAS FURNACE HEATING AND FUTURE DIRECT EXPANSION COOLING.
4. PROVIDE WITH ECONOMIZER MIXING BOX WITH BOTTOM AND SIDE INLETS FOR RETURN AIR AND OUTSIDE AIR (OUTSIDE AIR DAMPER SHALL HAVE A LEAKAGE RATE 4 CFM/SQFT OR LESS @ 1 INCH PRESSURE).
   - BASIS OF DESIGN MANUFACTURER: MICROMETL
5. PROVIDE WITH CONCENTRIC VENT KIT AND ROUTE UP THROUGH ROOF.
6. PROVIDE WITH ECONOMIZER FAULT DETECTION AND DIAGNOSTICS.
7. FILTER FRAME FOR 1" THROWAWAY FILTER IN RETURN AIR DUCT.
8. PROVIDE WITH CONDENSATE PUMP AND ACID NEUTRALIZATION KIT.
9. PROVIDE WITH CO2 SENSOR IN SPACE FOR DEMAND CONTROLLED VENTILATION. SEE FLOOR PLANS FOR SENSOR LOCATION. SEE SHEET M700 FOR DEMAND CONTROLLED VENTILATION SEQUENCE.

GENERAL NOTE:

BASIS OF DESIGN PRODUCTS LISTED IN THE SCHEDULES ESTABLISH THE QUALITIES AND CHARACTERISTICS FOR THE EVALUATION OF PRODUCT SUBSTITUTIONS BY THE CONTRACTING OFFICER. QUALITIES AND CHARACTERISTICS ARE LISTED FOR THE BASIS OF DESIGN PRODUCT IN THE SCHEDULES AND/OR THE PROJECT SPECIFICATIONS.

FAN SCHEDULE / SALIENT CHARACTERISTICS

GENERAL TAG	BASIS OF DESIGN MANUFACTURER	BASIS OF DESIGN MODEL	LOCATION	TYPE	PERFORMANCE (@ 8,841FT) AIRFLOW [CFM]	ESP [IN. W.C.]	SPEED [RPM]	POWER [W]	SOUND [SONES]	ELECTRICAL VOLTAGE [V]	PHASE	MCA [A]	MOCP [A]	FLA [A]	PHYSICAL LENGTH [IN.]	WIDTH [IN.]	HEIGHT [IN.]	WEIGHT [LB]	NOTES
CF-1	BIG ASS FANS	HAIKU	101 - EXHIBIT	CEILING	403 / 6062	-	174	2.4 / 15.9	-	115	1	-	-	-	60	60	12	18.5	4
EF-1	GREENHECK	SP-A125	112 - RR	CEILING	70	0.25	1100	15	1.2	115	1	0.2	15	0.18	11	13	9	17	1-3
EF-2	GREENHECK	SP-A125	113 - RR	CEILING	70	0.25	1100	15	1.2	115	1	0.2	15	0.18	11	13	9	17	1-3

NOTES
1. FAN SHALL BE INTERLOCKED WITH LIGHTS.
2. PROVIDE WITH BACKDRAFT DAMPER.
3. UNIT WEIGHT DOES NOT INCLUDE ACCESSORIES.
4. OIL RUBBED BRONZE AIRFOIL AND HARDWARE FINISH.

SPLIT SYSTEMS SCHEDULE - INDOOR UNIT / SALIENT CHARACTERISTICS

GENERAL TAG	BASIS OF DESIGN MANUFACTURER	BASIS OF DESIGN MODEL	LOCATION	REFRIGERANT	OUTDOOR UNIT	SUPPLY FAN AIRFLOW [CFM]	OUTSIDE AIR [CFM]	DX COOLING TOTAL COOLING [BTU/H]	SENSIBLE CAPACITY [BTU/H]	OPERATING RANGE [°F]	EFFICIENCY SEER2	PHYSICAL LENGTH [IN]	WIDTH [IN]	HEIGHT [IN]	WEIGHT [LB]	NOTES
AC-1	MITSUBISHI	PKA-AK30	019 - SERVER ROOM	R454B	CU-1	705	0	30,400	21,000	66 - 90	19.7	51-3/16	11-5/8	14-3/8	46	1-5

NOTES
1. PROVIDE WITH CONDENSATE PUMP.
   - BASIS OF DESIGN MANUFACTURER: BLUE DIAMOND
2. POWERED BY OUTDOOR UNIT.
3. DISCONNECT BY DIVISION 26.
4. PROVIDE WITH WIRED THERMOSTAT.
5. ALL REFRIGERANT PIPING, INCLUDING VALVES, FITTINGS, AND CONNECTIONS, TO BE PROVIDED, SIZED, AND ROUTED PER MANUFACTURER'S RECOMMENDATIONS.

SPLIT SYSTEMS SCHEDULE - OUTDOOR UNIT / SALIENT CHARACTERISTICS

GENERAL TAG	BASIS OF DESIGN MANUFACTURER	BASIS OF DESIGN MODEL	LOCATION	REFRIGERANT	DX COOLING TOTAL COOLING [BTU/H]	SENSIBLE CAPACITY [BTU/H]	OPERATING RANGE [°F]	ELECTRICAL VOLTAGE [V]	PHASE	FREQ. [Hz]	MCA [A]	MOCP [A]	PHYSICAL LENGTH [IN]	WIDTH [IN]	HEIGHT [IN]	WEIGHT [LB]	NOTES
CU-1	MITSUBISHI	PUY-AH30	GRADE	R454B	30,400	21,000	-40 - 115	208/230	1	60	22.0	37	37-13/32	14	37-1/8	155	1-8

NOTES
1. PROVIDE WITH MANUFACTURER HAIL GUARDS.
2. PROVIDE 48" TALL FIELD FABRICATED OUTDOOR UNIT STAND.
3. PROVIDE WITH SINGLE POWER POINT CONNECTION
4. PROVIDE WITH FIELD-MOUNTED DISCONNECT BY E.C.
5. PROVIDE WITH LOW AMBIENT COOLING KIT OPERATION.
6. PROVIDE ALUMINUM JACKETING FOR ALL EXTERIOR REFRIGERANT PIPING.
7. PROVIDE WITH WIRED THERMOSTAT.
8. ALL REFRIGERANT PIPING, INCLUDING VALVES, FITTINGS, AND CONNECTIONS, TO BE PROVIDED, SIZED, AND ROUTED PER MANUFACTURER'S RECOMMENDATIONS.

ELECTRIC HEATER SCHEDULE / SALIENT CHARACTERISTICS

GENERAL TAG	BASIS OF DESIGN MANUFACTURER	BASIS OF DESIGN MODEL	LOCATION	TYPE/MOUNTING	PERFORMANCE AIRFLOW [CFM]	OUTPUT [BTU/H]	ELECTRICAL POWER [kW]	VOLTAGE [V]	PHASE	FREQ. [Hz]	PHYSICAL LENGTH [IN]	WIDTH [IN]	HEIGHT [IN]	WEIGHT [LB]	NOTES
EWH-1	QMARK	CWH3504F	115 - MECH/ELEC	RECESSED WALL	100	16,378	4.8	240	1	60	5"	15 3/4"	19 5/16"	22	1,2,3,4

NOTES
1. PROVIDE WITH INTEGRAL THERMOSTAT.
2. PROVIDE WITH INTEGRAL ELECTRICAL DISCONNECT .
3. PROVIDE WITH MANUFACTURER'S MOUNTING BRACKET AND HARDWARE.
4. WHITE FINISH.

GRILLES, REGISTERS, AND DIFFUSERS SCHEDULE / SALIENT CHARACTERISTICS

GENERAL TAG	BASIS OF DESIGN MANUFACTURER	BASIS OF DESIGN MODEL	SERVICE	MATERIAL	FACE SIZE	FINISH	NOTES
-	-	-	SUPPLY	-	SEE DRAWINGS	-	1,6
A	TITUS	300FL	SUPPLY	ALUMINUM	14x6	PRIME FINISH TO BE FIELD PAINTED	2,3,5
B	TITUS	300FL	SUPPLY	ALUMINUM	6x6	PRIME FINISH TO BE FIELD PAINTED	2,3,5
C	TITUS	300FL	SUPPLY	ALUMINUM	12x6	PRIME FINISH TO BE FIELD PAINTED	2,3,5
D	TITUS	350FL	RETURN	ALUMINUM	SEE DRAWINGS	PRIME FINISH TO BE FIELD PAINTED	3,5
E	RECTORSEAL	375	SUPPLY	STEEL	SEE DRAWINGS	STORM GRAY	4,5,6
F	HART & COOLEY	420	SUPPLY	STEEL	SEE DRAWINGS	GOLDEN SAND	4
G	HART & COOLEY	406	SUPPLY	STEEL	SEE DRAWINGS	WHITE	4,6

NOTES
1. EXISTING TO REMAIN SUPPLY GRILLE. BALANCE TO CFM VALUE NOTED ON DRAWINGS.
2. OPPOSED BLADE DAMPER IN FACE OF GRILLE.
3. PROVIDE WITH GYPSUM BOARD MOUNTING FRAME FOR GYPSUM BOARD HARD LID CEILING/WALL - SEE PLAN.
4. PROVIDE WITH INTEGRAL BALANCING DAMPER.
5. BLADES PARALLEL WITH LONG DIMENSION.
6. PROVIDE WITH 1/4" WIRE MESH AT DUCT OPENING.

RELIEF HOOD SCHEDULE / SALIENT CHARACTERISTICS

GENERAL TAG	MANUFACTURER	MODEL	LOCATION	SERVICE	PERFORMANCE AIRFLOW [CFM]	FREE AREA [SF]	FACE VELOCITY [FPM]	PRESSURE DROP [IN. W.C.]	PHYSICAL LENGTH [IN]	WIDTH [IN]	HEIGHT [IN]	WEIGHT [LB]	NOTES
RH-1	GREENHECK	FGR-32x44	ROOF	RELIEF	6,200	10	634	0.097	63	51	31	164	1,2

NOTES
1. PROVIDE WITH MANUFACTURER STANDARD ROOF CURB.
2. 46.5"x34.5" ROOF OPENING.

COLORADO LICENSED JAMES W. SPENCER 55863 01/16/26 PROFESSIONAL ENGINEER

AE FIRM PRIME: OTAK, INC. REDMOND, WA SUBCONTRACTOR: 360 ENGINEERING, INC. GOLDEN, CO	DESIGNED: JEG/MM CADD JEG/MM TECH REVIEW: SJR/DMD DATE: 01/16/2026	SUB SHEET NO. M600	TITLE OF SHEET MECHANICAL SCHEDULES REHABILITATE KAWUNEECHE VISITOR CENTER ROCKY MOUNTAIN NATIONAL PARK	DRAWING NO. 121 165639 PMIS/PKG NO. 326235 SHEET 102 OF 177

Autodesk Docs://2024-260 NPS ROMO Kawuneeche VC DD-CA wOtak/ROMO KVC Mech-Plumb.rvt
1/7/2026 8:37:04 PM

ECONOMIZER AND DEMAND CONTROL VENTILATION SEQUENCE OF OPERATION MATRIX

DCV	OA GOOD TO ECONOMIZE?	CALL FOR STAGE 1 HEATING	CALL FOR STAGE 2 HEATING	HEATING STAGE 1 OUTPUT	HEATING STAGE 2 OUTPUT	OCCUPIED	UNOCCUPIED
BELOW SETPOINT	NO	OFF	OFF	OFF	OFF	VENTMIN	CLOSED
		ON	OFF	ON	OFF	VENTMIN	CLOSED
		ON	ON	ON	ON	VENTMIN	CLOSED
	YES	OFF	OFF	OFF	OFF	VENTMIN	CLOSED
		ON	OFF	ON	OFF	VENTMIN TO FULL-OPEN	CLOSED TO FULL-OPEN
		ON	ON	ON	ON	VENTMIN TO FULL-OPEN	CLOSED TO FULL-OPEN
ABOVE SETPOINT	NO	OFF	OFF	OFF	OFF	VENTMIN TO VENTMAX	CLOSED
		ON	OFF	ON	OFF	VENTMIN TO VENTMAX	CLOSED
		ON	ON	ON	ON	VENTMIN TO VENTMAX	CLOSED
	YES	OFF	OFF	OFF	OFF	VENTMIN TO VENTMAX	CLOSED
		ON	OFF	ON	OFF	VENTMIN TO FULL-OPEN	CLOSED TO FULL-OPEN
		ON	ON	ON	ON	VENTMIN TO FULL-OPEN	CLOSED TO FULL-OPEN

FURNACE CONTROL SEQUENCE:

OCCUPIED MODE:
THE GAS FURNACE SHALL BE CONTROLLED BY A 7-DAY PROGRAMMABLE THERMOSTAT. THE SUPPLY FAN SHALL RUN CONTINUOUSLY DURING OCCUPIED HOURS. THE PROGRAMMABLE THERMOSTAT SHALL CYCLE ON THE GAS HEAT EXCHANGER AS REQUIRED TO MAINTAIN HEATING SETPOINT (70°F - ADJUSTABLE).

WHEN THE SUPPLY FAN RUNS, THE OUTSIDE AIR DAMPER SHALL OPEN TO PROVIDE THE SCHEDULE OUTSIDE AIR TO THE SPACE.

WHEN THE OUTSIDE AIR TEMPERATURE IS ABOVE 70°F (ADJUSTABLE), THE ECONOMIZER MIXING BOX CONTROLLER SHALL MODULATE THE OA AUTOMATIC DAMPER OPEN AND THE RA AUTOMATIC DAMPER OPEN/CLOSED AS REQUIRED TO MAINTAIN HEATING SETPOINT (70°F - ADJUSTABLE).

UNOCCUPIED MODE:
THE PROGRAMMABLE THERMOSTAT SHALL CYCLE ON THE SUPPLY FAN AND GAS HEAT EXCHANGER TO MAINTAIN THE UNOCCUPIED HEATING SETPOINT (55°F - ADJUSTABLE). THE OUTSIDE AIR DAMPERS SHALL REMAIN CLOSED DURING UNOCCUPIED HOURS.

DEMAND CONTROLLED VENTILATION:
THE OUTSIDE AIR DAMPER SHALL BE CONTROLLED VIA THE ECONOMIZER/DCV CONTROL MODULE (BASIS OF DESIGN - HONEYWELL JADE W7220).

WHEN SPACE CO2 SENSOR DETECTS CO2 LEVELS BELOW SETPOINT OF 1,100PPM (ADJUSTABLE), OUTSIDE AIR TO THE SPACE WILL BE AT THE VENTILATION MINIMUM SETPOINT (VENTMIN VALUE IN VENTILATION SETTINGS TABLE BELOW).

WHEN SPACE CO2 SENSOR DETECTS CO2 LEVELS ABOVE SETPOINT OF 1,100PPM (ADJUSTABLE), OUTSIDE AIR TO THE SPACE WILL MODULATE UP TO THE VENTILATION MAXIMUM SETPOINT (VENTMAX VALUE IN VENTILATION SETTINGS TABLE BELOW).

VENTILATION SETTINGS TABLE

EQUIP. TAG	VENTMIN [CFM]	VENTMAX [CFM]
GF-1	40	420
GF-2	60	440
GF-3	90	350
GF-4	65	405
GF-5	30	190

COLORADO LICENSED PROFESSIONAL ENGINEER SPENCER JAMES RIOUX 55863 01/16/26

AE FIRM	DESIGNED:	SUB SHEET NO.	TITLE OF SHEET	DRAWING NO.
PRIME: OTAK, INC. REDMOND, WA	JEG/MM	M700	MECHANICAL CONTROLS SEQUENCES	121 165639
SUBCONTRACTOR: 360 ENGINEERING, INC. GOLDEN, CO	CADD JEG/MM		REHABILITATE KAWUNEECHE VISITOR CENTER ROCKY MOUNTAIN NATIONAL PARK	PMIS/PKG NO. 326235
	TECH REVIEW: SJR/DMD			SHEET 103 OF 177
	DATE: 01/16/2026			

1/7/2026 8:37:05 PM Autodesk Docs://2024-260 NPS ROMO Kawuneeche VC DD-CA wOtak/ROMO KVC Mech-Plumb.rvt