CRANE No. 64 IMPROVEMENTS
BUILDING 114

Naval Station Newport
Naval Undersea Warfare Center
Newport RI

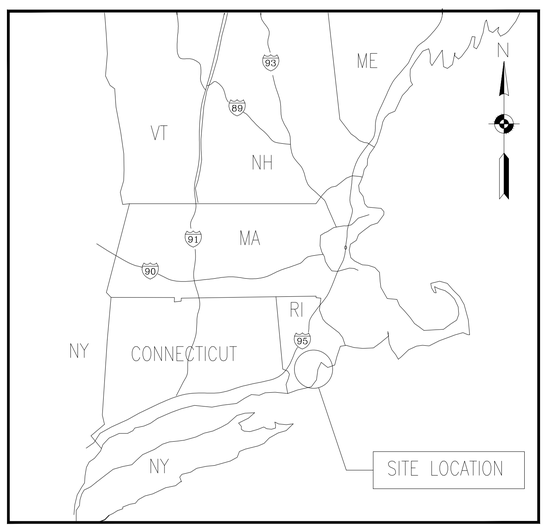

VICINITY MAP

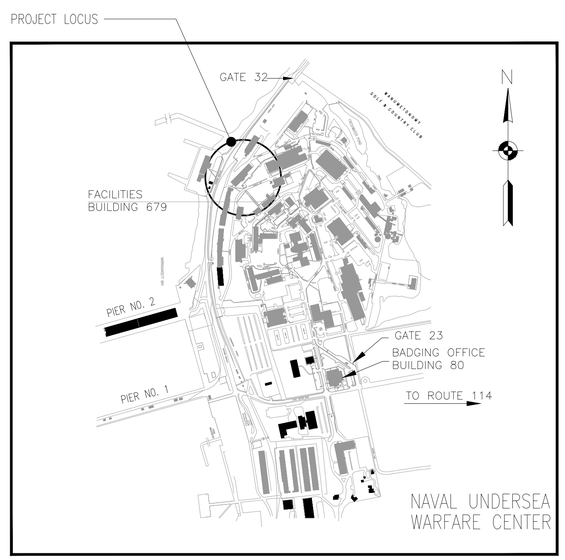

LOCATION MAP

INDEX OF DRAWINGS			
SHEET NO.	SHT. ID	DWG NO.	DWG TITLE
1 OF 8	T-1		TITLE SHEET
2 OF 8	G-1		GENERAL NOTES
3 OF 8	A-1		PLAN – EXISTING CONDITIONS
4 OF 8	A-2		PLAN – NEW CRANE INSTALL
5 OF 8	A-3		ELEVATIONS & SECTIONS
6 OF 8	A-4		PLAN – CRANE MOVEMENT LIMITS
7 OF 8	A-5		PHOTOS – EXISTING CONDTIONS
8 OF 8	A-6		PHOTOS – EXISTING CONDTIONS

PROJECT SCOPE: REMOVE AND DISPOSE EXISTING OVERHEAD ELECTRIC 3-TON CRANE AND PROVIDE TWO (2) NEW 3-TON OVERHEAD ELECTRIC CRANES. THE PROJECT IS SEPARATED INTO A BASE BID AND A BID OPTION No. 1. THE BASE BID WORK INCLUDES PROVIDING A NEW SINGLE 3-TON OVERHEAD ELECTRIC CRANE, AND INCLUDES BUT NOT LIMITED TO REPLACING THE CRANE RAIL, CRANE CONDUCTORS, ELECTRIC POWER FEED. BID OPTION No. 1 INCLUDES PROVIDING FOR A NEW SECOND 3-TON OVERHEAD ELECTRIC CRANE TO OPERATE ON THE SAME CRANE RAILS AND INCLUDES THE PROVISION FOR A CRANE ANTI-COLLISION SYSTEM TO KEEP THE TWO CRANES SEPARATED BY A SPECIFIC MINIMUM OPERATIONAL DISTANCE. BASE BID SHALL PROVIDE SUFFICIENT ELECTRIC POWER TO THE CRANE SYSTEM TO SUPPORT THE OPERATION OF TWO CRANES ON THE COMMON RAIL SYSTEM. 1

FINAL SET
10 DEC 25

SYMBOL	DESCRIPTION	DATE	APP'VD
1	ADDENDUM No. 1 ADD BID OPTION No. 1	7/26 12/25	G.O. G.O.

REVISIONS

DSGN. G.O. 8/2025
DR. G.O. 8/2025
BR. HD. D.W.
DIV. HD. J.J.
APPROVED
DATE
SATISFACTORY TO DATE

DEPARTMENT OF THE NAVY
NAVAL FACILITIES ENGINEERING SYSTEMS COMMAND
NAVAL STATION NEWPORT
NEWPORT, RHODE ISLAND

CRANE No. 64 IMPROVEMENTS
BUILDING 114 NUWC
TITLE SHEET

CODE ID. NO. 80091
DRAWING SIZE: ANSI D
SCALE: AS NOTED
CONST. CONTRACT NO. XXXXXX-XXXX-XX
NAVFAC DRAWING NO. XXXXXX
NSN DRAWING NO. XXXXXX
SHEET 1 OF 8

T-1

P R O J E C T N O T E S

I GENERAL WORK NOTES

1. ALL WORK SHALL CONFORM TO ALL STATE, NATIONAL AND OTHER CODES AND ORDINANCES WHICH APPLY TO THIS PROJECT. UFC 1-200-01 DoD BUILDING CODE ADOPTS THE INTERNATIONAL BUILDING CODE (2018 OR CURRENT) AND UFC 4-010-05.

2. THE CONTRACTOR SHALL IDENTIFY AND FIELD VERIFY POINTS OF CONNECTION WHERE EXISTING AND NEW CONSTRUCTION MEET AND REPORT ANY DISCREPANCIES TO THE CONTRACTING OFFICER. THE CONTRACTOR SHALL PROCEED WITH THE WORK ONLY AFTER THE DISCREPANCIES HAVE BEEN RESOLVED BY THE GOVERNMENT.

3. ALL COMPONENTS AND WORK ARE NEW AND SHALL BE PROVIDED BY THE CONTRACTOR UNLESS OTHERWISE NOTED.

4. VERIFY ALL DIMENSIONS IN FIELD PRIOR TO ORDERING MATERIALS OR COMMENCING WORK.

5. COORDINATE DIMENSIONS ON DRAWINGS WITH THOSE MEASURED IN THE FIELD. REPORT DISCREPANCIES TO CONTRACTING OFFICER AND ENGINEER.

6. ALL DIMENSIONS ARE SHOWN IN FEET AND INCHES UNLESS NOTED OTHERWISE.

7. DRAWINGS DEPICT ITEMS TO BE REMOVED OR MODIFIED AS DASHED LINES. NEW WORK IS SHOWN AS DARKER BLACK LINES. EXISTING FEATURES AND ITEMS TO REMAIN ARE SHOWN IN GRAY OR LIGHTER LINES.

8. PROTECT EXISTING WALLS, FLOORS, CEILINGS, ROOF, STRUCTURE, AND EQUIPMENT DURING PERFORMANCE OF THE WORK. CARE SHALL BE TAKEN TO PROTECT EXISTING SYSTEMS AND SURFACES TO REMAIN. THE CONTRACTOR SHALL RESTORE EXISTING SURFACE AREAS DAMAGED BY CONSTRUCTION OPERATIONS TO A CONDITION ACCEPTABLE TO THE CONTRACTING OFFICER. ALL DAMAGE RESULTING FROM THE CONTRACTOR'S OPERATIONS SHALL BE REPAIRED OR REPLACED AT NO ADDITIONAL COST TO THE GOVERNMENT.

9. AT THE END OF EACH WORKING DAY, THE WORK SITE SHALL BE LEFT IN A NEAT AND CLEAN MANNER.

10. THE CONTRACTOR SHALL BE RESPONSIBLE FOR OBTAINING ALL PERMITS WHICH ARE REQUIRED FOR THE SATISFACTORY COMPLETION OF THE WORK.

11. THE CONTRACTOR SHALL DISPOSE OF AND/OR RECYCLE MATERIAL AND CONSTRUCTION DEBRIS FROM THE PROJECT SITE IN A PRE-APPROVED LEGAL MANNER IN ACCORDANCE WITH THE DEMOLITION SPECIFICATIONS AND AS REQUIRED BY THE STATE OF RHODE ISLAND. THE CONTRACTOR SHALL BE RESPONSIBLE FOR OBTAINING ANY DISPOSAL PERMITS WHICH ARE REQUIRED. CONSTRUCTION DEBRIS FROM THE PROJECT SITE SHALL BE DISPOSED OF IN A MANNER APPROVED BY THE CONTRACTING OFFICER.

12. CONTRACTOR SHALL PROVIDE TEMPORARY CHAIN LINK FENCING (MINIMUM 6' HIGH) OR OTHER PROTECTIVE BARRIER AROUND THE LAYDOWN AREA TO PREVENT UNAUTHORIZED NUWC PERSONNEL FROM ENTERING. KEEP LOCKED AND SECURE AT ALL TIMES.

13. CONTRACTOR SHALL SUBMIT TO THE GOVERNMENT FOR APPROVAL ALL MATERIALS BEING USED IN THIS PROJECT, AS WELL AS SHOP DRAWINGS.

14. WORK SHALL BE CONDUCTED IN A SAFE MANNER IN ACCORDANCE WITH USACE EM 385 – SAFETY AND HEALTH REQUIREMENTS MANUAL (LATEST EDITION).

15. CRANES / WEIGHT HANDLING EQUIPMENT (WHE) ARE REGULATED AT NUWCDIVNPT AND NAVAL STATION NEWPORT PER COMNAVREG MIDLANT INSTR. 112621.1A. IF CRANES ARE USED THEY WILL BE SUBJECTED TO THE NAVFAC CRANE SURVEILLANCE PROGRAM. CONTRACTING OFFICER WILL PROVIDE INFORMATION REGARDING THIS SURVEILLANCE AND INSPECTION PROGRAM AT THE POST AWARD / PRE-CONSTRUCTION CONFERENCE.

16. BUILDING 114 WILL BE OCCUPIED BY NAVY PERSONNEL DURING THE WORK. PROVIDE SIGNAGE AND DUST-PROOF BARRIERS TO KEEP UNAUTHORIZED PERSONNEL FROM ENTERING THE WORK SPACE. MAINTAIN SIGNAGE AND BARRIERS FOR THE DURATION OF THE PROJECT.

17. ALL MATERIAL AND PRODUCTS BROUGHT ONTO THE NUWC FACILITY GROUNDS FOR USE ON THE PROJECT SHALL BE PROCESSED THROUGH THE NUWC SAFETY AND ENVIRONMENTAL DEPARTMENT HAZARDOUS MATERIAL CONTROL (HAZCON) PROGRAM (NUWC DIV NPT INSTRUCTION 5090.3D). SUBMIT SDS DATA FOR ALL MATERIALS FOR APPROVAL PRIOR TO BRINGING THE MATERIAL ON SITE. ALL MATERIALS MUST BE STORED PROPERLY IN ACCORDANCE WITH THE MATERIAL SDS AND THE NUWC ENVIRONMENTAL REQUIREMENTS. OR, MATERIAL SHALL BE REMOVED FROM THE SITE AT THE END OF EACH WORK DAY.

18. HOT WORK PERMITS SHALL BE OBTAINED FROM NAVAL STATION NEWPORT FIRE DEPARTMENT FOR ALL WELDING, TORCHING, BURNING, AND CUTTING OPERATIONS. PERMIT SHALL BE OBTAINED PRIOR TO STARTING HOT WORK. IT IS MANDATORY TO HAVE A DESIGNATED FIRE WATCH FOR ANY "HOT WORK" DONE AT THIS ACTIVITY. THE FIRE WATCH SHALL BE TRAINED IN ACCORDANCE WITH NFPA 51B AND REMAIN ON-SITE AS REQUIRED AFTER COMPLETION OF THE TASK OR AS SPECIFIED ON THE HOT WORK PERMIT.

19. ACCESS TO ROOFS REQUIRE PRIOR APPROVAL FROM NUWCDIVNPT SAFETY DEPARTMENT. CONTRACTOR SHALL SUBMIT A SIGNED COPY OF THEIR CORPORATE FALL PROTECTION TRAINING AND COMPLIANCE PLAN TO NUWC FOR REVIEW AND ACCEPTANCE PRIOR TO COMMENCING WORK. THEREAFTER, THE CONTRACTOR SHALL NOTIFY THE NUWC SAFETY OFFICE EACH DAY THAT WORKERS WILL BE ON THE ROOF, BOTH PRIOR TO ACCESSING THE ROOF AND AFTER VACATING THE ROOF.

I. GENERAL WORK NOTES (COND):

20. ACCESS TO THE WORK AREA WILL BE ESTABLISHED BY THE CONTRACTING OFFICER DESIGNATED REPRESENTATIVE (CODR), NUWC END-USER BUILDING REPRESENTATIVE, AND NUWC SECURITY REPRESENTATIVE.

21. LAYDOWN AREA FOR CONTRACTOR MATERIALS AND EQUIPMENT IS LIMITED AT NUWCDIVNPT CAMPUS. CLOSE COORDINATION WITH THE CONTRACTING OFFICER, NUWC SECURITY, AND THE BUILDING/FACILITY SITE MANAGER IS REQUIRED. ALL STORED MATERIAL AND EQUIPMENT SHALL BE SECURED AT ALL TIMES.

22. ENVIRONMENTAL CONTROLS SHALL BE EMPLOYED DURING THE DURATION OF THE PROJECT TO PROTECT OCCUPANTS AND EQUIPMENT AND INTERIOR SPACES AS FOLLOWS:
    A. PROTECTION OF OCCUPANTS, EQUIPMENT, AND SPACES OF DUST FROM PERFORMANCE OF THE WORK.
    B. PROTECTION OF OCCUPANTS DURING CRANE RAIL INSTALLATION AND WELDING WORK.
    C. MITIGATION OF EXCESSIVE NOISE DUE TO ALL ELEMENTS OF WORK.

II DESIGN DATA

1. LIVE LOADS:
   SLAB-ON-GRADE: 250 PSF
   ATTIC FLOOR: 50 PSF

2. ROOF SNOW LOADS:
   GROUND SNOW LOAD: Pg = 30 PSF
   MIN. FLAT ROOF SNOW LOAD: Pf = 30 PSF
   EXPOSURE FACTOR: Ce = 1.0
   THERMAL FACTOR: Ct = 1.0
   SNOW IMPORTANCE FACTOR:Is = 1.0
   ROOF SLOPE FACTOR:Cs = 1.0

3. CRANE LOADS:
   OVERHEAD ELECTRIC BRIDGE CRANE: 3 TONS (6,000 LBS) [2 TOTAL]
   CERTIFICATION TEST WEIGHT: 125% OF CRANE CAPACITY
   HOIST & TROLLEY SELF-WEIGHT
   IMPACT FACTOR – XX%
   HOIST LOAD FACTOR – XX%
   MAX END STOP IMPACT FORCE = XXX KIPS
   CRANE WHEEL LOADS:
   VERTICAL WHEEL LOADS = XX KIPS PER WHEEL (2 PER RAIL)
   LATERAL WHEEL LOADS = XX KIPS EACH RAIL
   LONGITUDINAL WHEEL LOADS = XX KIPS (EACH RAIL)
   'XX' = VALUES TO BE DETERMINED BY CRANE MANUFACTURER BY MEANS OF CRANE COMPONENT DESIGN PROCESS

III. STRUCTURAL STEEL

1. STRUCTURAL STEEL SHALL CONFORM TO AISC STEEL CONSTRUCTION MANUAL 13TH EDITION.

2. WELDING SHALL CONFORM TO AWS D1.1 STRUCTURAL WELDING CODE. STRUCTURAL STEEL SHALL CONFORM TO THE FOLLOWING:

(A) W-SHAPES	ASTM A992 GRADE 50
(B) HOLLOW STRUCTURAL SECTIONS	(HSS)ASTM A500 GRADE B
(C) CHANNELS, ANGLES, AND PLATES	ASTM A36
(D) PIPE SECTIONS	ASTM A53 GRADE B
(E) HIGH STRENGTH BOLTS	ASTM A325
(F) NUTS	ASTM A563
(G) ANCHOR RODS	ASTM F1554 GRADE 36

3. ALL CONNECTIONS SHALL BE DESIGNED BY THE STEEL FABRICATOR, AND SHALL BE IN ACCORDANCE WITH THE REQUIREMENTS OF THE AISC MANUAL OF STEEL CONSTRUCTION 13TH EDITION AND AS STATED HEREIN.

4. ALL BOLTED CONNECTIONS SHALL BE MADE WITH ¾" HIGH STRENGTH BOLTS (ASTM A325-N) UNLESS NOTED OTHERWISE OR REQUIRED BY REACTIONS. BOLTS SHALL BE TRADITIONAL TYPE AND TIGHTENED BY TURN-OF-THE-NUT METHOD. TENSION CRITICAL (TC) BOLTS SHALL NOT BE USED.

5. ALL WELDING ELECTRODES SHALL BE E70XX.

6. POST-INSTALLED ANCHORS, IF REQUIRED, SHALL BE 3/4 INCH RODS SET IN HILTI HY-200R OR HILTI KB3 EXPANSION TYPE FOR CONCRETE SUBSTRATE. ANCHORS SHALL BE CARBON STEEL WITH HOT-DIPPED GALVANIZED COATING. EMBEDMENT DEPTHS TO BE DETERMINED BASED ON LOADING AND SUBSTRATE.

7. EXCEPT WHERE SPECIFIC CAPACITIES ARE INDICATED ON DRAWINGS, BEAM CONNECTIONS SHALL PROVIDE SUFFICIENT SHEAR CAPACITY TO SUPPORT HALF THE MAXIMUM TOTAL UNIFORM LOAD OF THE BEAM IN QUESTION FOR THE GIVEN SHAPE, SPAN, AND MATERIAL.

8. UNLESS NOTED OTHERWISE ALL CONNECTIONS SHALL BE DESIGNED AND DETAILED AS SIMPLE SHEAR CONNECTIONS, AND SHALL PROVIDE A MINIMUM OF 2 BOLTS AT EACH CONNECTION.

9. SIMPLE SHEAR CONNECTIONS SHALL BE EITHER SINGLE-PLATE OR DOUBLE ANGLE CONNECTIONS AS REQUIRED.

10. NON-SHRINK CEMENTITIOUS GROUT SHALL CONFORM TO ASTM C1107.

11. ALL STRUCTURAL STEEL SHALL BE PRIMED WITH A COAT OF ZINC RICH PRIMER AND ONE COAT OF FINISH PAINT. COLOR TO BE SELECTED BY CONTRACT OFFICERS DESIGNATED REPRESENTATIVE.

IV. OVER HEAD CRANES

1. NEW CRANE/HOIST CAPACITY

BUILDING 114 – 3 TONS (6,000 LBS) QUANTITY 2. OVERHEAD ELECTRIC BRIDGE CRANES SUPPORTED ON EXISTING STEEL CRANE RAIL BEAM.
- CRANE #1 IS THE BASE BID.
- CRANE #2 IS BID OPTION 1.

2. NEW CRANES SHALL BE OVERHEAD ELECTRIC BRIDGE CRANES WITH SPAN AND LENGTH AS SHOWN ON PLAN A-2 TO A-4.

3. CRANE DESIGNS SHALL FOLLOW THE NAVY CRANE CENTER INSTRUCTION "NAVCRANECEN INSTRUCTION 11450.2A – DESIGN OF NAVY SHORE WEIGHT HANDLING EQUIPMENT" DATED 19 DECEMBER 2018.

4. CRANES SHALL CONFORM TO CMAA SPECIFICATION #74 – SPECIFICATIONS FOR TOP RUNNING & UNDER RUNNING SINGLE GIRDER ELECTRIC TRAVELING CRANES UTILIZING UNDER RUNNING TROLLEY HOIST, LATEST EDITION.

5. VERIFY ALL EXISTING BUILDING, CRANE, AND SUPPORT STRUCTURE DIMENSIONS AND CONDITIONS.

6. CRANES SHALL BE DESIGNED AND INSTALLED IN ACCORDANCE WITH APPLICABLE CODES AND REGULATIONS REFERENCED IN THE PROJECT SPECIFICATIONS. THE CRANE SYSTEM INCLUDES, BUT IS NOT LIMITED TO, HOISTS, TROLLEY'S, BRIDGE BEAMS, RAIL BEAMS, RAILS, FITTINGS, HANGERS, SUPPORTS, CONNECTIONS, AND ELECTRICAL COMPONENTS, REFER TO SPECIFICATION SECTION 41 22 13.15 – BRIDGE CRANES, OVERHEAD ELECTRIC, UNDER RUNNING.

7. FOR TOP-RUNNING CRANES OR PORTAL CRANES, CRANE RAILS SHALL CONFORM TO THE REQUIREMENTS SET FORTH IN NAVFAC INSTRUCTION 11230.1F – INSPECTION, CERTIFICATION, AND AUDIT OF CRANE AND RAILROAD TRACKAGE.

8. ALL FIELD WELDS SHALL BE INSPECTED BY AN INDEPENDENT INSPECTION AND TESTING LABORATORY. CONTRACTOR IS RESPONSIBLE FOR INSPECTION/TESTING SCHEDULING AND COSTS.

9. WELDING SHALL BE PERFORMED BY CERTIFIED WELDERS FOR EACH WELDING TYPE AND PROCESS. WELDING WILL REQUIRE A HOT WORK PERMIT THAT MUST BE OBTAINED FROM THE NAVAL STATION NEWPORT FIRE DEPARTMENT.

10. ALL STRUCTURAL STEEL AND CRANE COMPONENTS SHALL BE PAINTED WITH A RUST-INHIBITIVE PRIMER AND A FINISH COAT. FIELD TOUCH UP AS NEEDED. FINISH COAT COLOR TO BE SELECTED BY CONTRACTING OFFICER DESIGNATED REPRESENTATIVE.

11. ALL EXISTING ELECTRICAL AND MECHANICAL PIPES, CONDUIT, LIGHT FIXTURES, WIRE, BOXES, AND EQUIPMENT THAT INTERFERES WITH THE NEW CRANE INSTALLATION SHALL BE REMOVED, RELOCATED, AND RE-INSTALLED BY THE CONTRACTOR.

12. CONTRACTOR SHALL PROVIDE MAIN ELECTRIC POWER FEED WITH ALL SWITCHES, BOXES, PANELS, BREAKERS, AND CONNECTIONS FROM POWER SUPPLY TO CRANE SYSTEM.

13. ALL HOLES IN NEW OR EXISTING STEEL MEMBERS SHALL BE DRILLED (BOLT DIA. + 1/16"). NO TORCH CUTTING OF HOLES IS PERMITTED.

14. BOLTS AND THREADED RODS SHALL BE INSTALLED WITH WASHERS TOP AND BOTTOM AND SHANK THREADS PEENED AT NUT TO PREVENT LOOSENING OF NUT AFTER FINAL TIGHTENING.

15. CRANE RAIL JOINTS ON OPPOSITE SIDES OF CRANE RUNWAY (ALONG EAST AND WEST WALLS) SHALL BE STAGGERED WITH RESPECT TO EACH OTHER AND WITH RESPECT TO THE WHEEL BASE OF THE BRIDGE CRANE.

16. IN ACCORDANCE WITH AISC STEEL CONSTRUCTION MANUAL (CURRENT REVISION), BRIDGE CRANE RAIL SPLICES SHALL BE FIELD BOLTED AND CONSTRUCTED WITH TIGHT JOINTS. RAIL SEPARATION AT BUTT JOINTS SHALL NOT EXCEED 1/16 INCH.

17. CONTRACTOR SHALL ENSURE CRANE AND COMPONENTS ARE INSTALLED LEVEL, PLUMB, AND IN PROPER ALIGNMENT IN ACCORDANCE WITH CRANE OPERATING TOLERANCES.

18. THE CONTRACTOR SHALL PERFORM A VERTICAL AND HORIZONTAL ALIGNMENT SURVEY OF THE CRANE RAIL SYSTEM FOLLOWING INSTALLATION. THE CRANE RAIL SYSTEM SHALL BE INSTALLED PER TOLERANCES INDICATED IN CMAA 74 TABLE 1.4.1-1 CRANE RUNWAY RAIL TOLERANCES. THE SURVEY SHALL BE PERFORMED BY A LICENSED SURVEYOR REGISTERED IN THE STATE OF RHODE ISLAND OR A PROFESSIONAL ENGINEER EXPERIENCED IN CONDUCTING CRANE RAIL SURVEYS. FOLLOWING INSTALLATION AND ADJUSTMENT OF THE CRANE RAIL SYSTEM, THE CONTRACTOR'S SURVEYOR AND/OR ENGINEER SHALL PREPARE A SURVEY REPORT. SUBMIT THE RAIL SURVEY REPORT (2 COPIES) TO CONTRACTING OFFICER. THE RAIL REPORT SHALL INCLUDE:

    18.1 DATE OF INSTALLATION
    18.2 DATE OF SURVEY
    18.3 SURVEY FIELD NOTES AND METHODS AND EQUIPMENT USED
    18.4 SURVEY PLAN IN ANSI D SIZE FORMAT
    18.5 TOLERANCES WITH RESPECT TO CMAA 74 REQUIREMENTS
    18.6 SEAL AND SIGNATURE OF RESPONSIBLE LICENSED SURVEYOR OR PROFESSIONAL ENGINEER

19. UNLESS NOTED ON DRAWINGS, ALL CRANE MATERIALS AND COMPONENTS SHALL BE NEW.

20. ALL CRANE COMPONENTS REMOVED AND DEMOLISHED SHALL BE HANDLED AND DISPOSED OF BY THE CONTRACTOR IN AN APPROVED AND ACCEPTABLE MANNER. ALL COMPONENTS SHALL BE REMOVED FROM THE SITE.

21. CRANE SUBMITTALS FOR REVIEW AND APPROVAL:

    21.1 CRANE AND CRANE COMPONENT DESIGN DRAWINGS & SPECS**
    21.2 CRANE AND CRANE COMPONENT ENGINEERING CALCULATIONS**
    21.3 CRANE AND CRANE COMPONENT ORIGINAL EQUIPMENT MANUFACTURER (OEM) MANUALS
    21.4 STRUCTURAL STEEL SHOP DRAWINGS
    21.5 MISCELLANEOUS METAL SHOP DRAWINGS
    21.6 WELDER CERTIFICATIONS
    21.7 WELD INSPECTION AND TEST REPORTS
    21.8 PAINT COLOR CHART
    21.9 CRANE RAIL FINAL SURVEY (SIGNED BY LISC SURVEYOR OR PE)
    21.10 NAVY CRANE CENTER ALTERATION REQUEST
    21.11 NAVY CRANE CENTER CERTIFICATION REQUIREMENTS

** CRANE DESIGN DRAWINGS, CRANE SPECIFICATIONS, AND ENGINEERING CALCULATIONS SHALL BE SEALED AND SIGNED BY THE RESPONSIBLE REGISTERED PROFESSIONAL ENGINEER.

V. INSPECTION OF WELDING – STRUCTURAL STEEL

WELD INSPECTION FREQUENCY PERFORMED BY A CONTRACTOR-PROVIDED INDEPENDENT CERTIFIED AWS WELDING INSPECTOR SHALL BE AS FOLLOWS:

1. COMPLETE AND PARTIAL PENETRATION GROOVE WELDS N/A

2. MULTIPLE PASS FILLET WELDS N/A

3. FILLET WELDS, SINGLE PASS > 5/16 INCH
   N/A

4. FILLET WELDS, SINGLE PASS < 5/16 INCH
   PARTIAL

5. PLUG OR SLOT WELDS
   PARTIAL

6. ROOF DECK WELDS N/A

AWS CERTIFIED WELDING INSPECTOR SHALL BE PRESENT DURING WELDING AT THE INTERVALS SHOWN ABOVE. THE INSPECTOR NEED NOT BE CONTINUOUSLY PRESENT DURING WELDING OF THE FOLLOWING ITEMS, PROVIDED THAT THE MATERIALS, WELDING PROCEDURES, AND QUALIFICATIONS OF WELDERS ARE VERIFIED PRIOR TO THE START OF WORK; PERIODIC INSPECTIONS ARE MADE OF THE WORK IN PROGRESS; AND VISUAL INSPECTION OF ALL WELDS IS MADE PRIOR TO COMPLETION OR PRIOR TO SHIPMENT OF SHOP WELDING:

1. FILLET WELDS, SINGLE PASS NOT EXCEEDING 5/16 INCH

2. PLUG OR SLOT WELD

VI. ELECTRICAL NOTES

1. REFER TO SPECIFICATION "SECTION 26 05 00.00 40 – COMMON WORK RESULTS FOR ELECTRICAL" FOR ELECTRICAL EQUIPMENT REQUIREMENTS

2. CONTRACTOR SHALL CONFIRM POWER DEMAND REQUIREMENTS FOR NEW CRANE WITH THE CRANE MANUFACTURER/INSTALLER PRIOR TO PERFORMING THE NEW CRANE POWER FEED INSTALLATION TO CONFIRM PROPER AMPERAGE.

FINAL SET
10 DEC 25

SYMBOL	DESCRIPTION	DATE	APP'VD
1	ADD BID OPTION No. 1	12/25	G.O.

REVISIONS

DSGN. G.O. 8/2025
DR. G.O. 8/2025
BR. HD. D.W.
DIV. HD. J.J.
APPROVED
DATE
SATISFACTORY TO DATE

DEPARTMENT OF THE NAVY
NAVAL FACILITIES ENGINEERING SYSTEMS COMMAND
NAVAL STATION NEWPORT
NEWPORT, RHODE ISLAND

CRANE No. 64 IMPROVEMENTS
BUILDING 114 NUWC
GENERAL NOTES

CODE ID. NO. 80091
DRAWING SIZE: ANSI D
SCALE: AS NOTED
CONST. CONTRACT NO. XXXXXX-XXXX-XX
NAVFAC DRAWING NO. XXXXXX
NSN DRAWING NO. XXXXXX
SHEET 2 OF 8

G-1

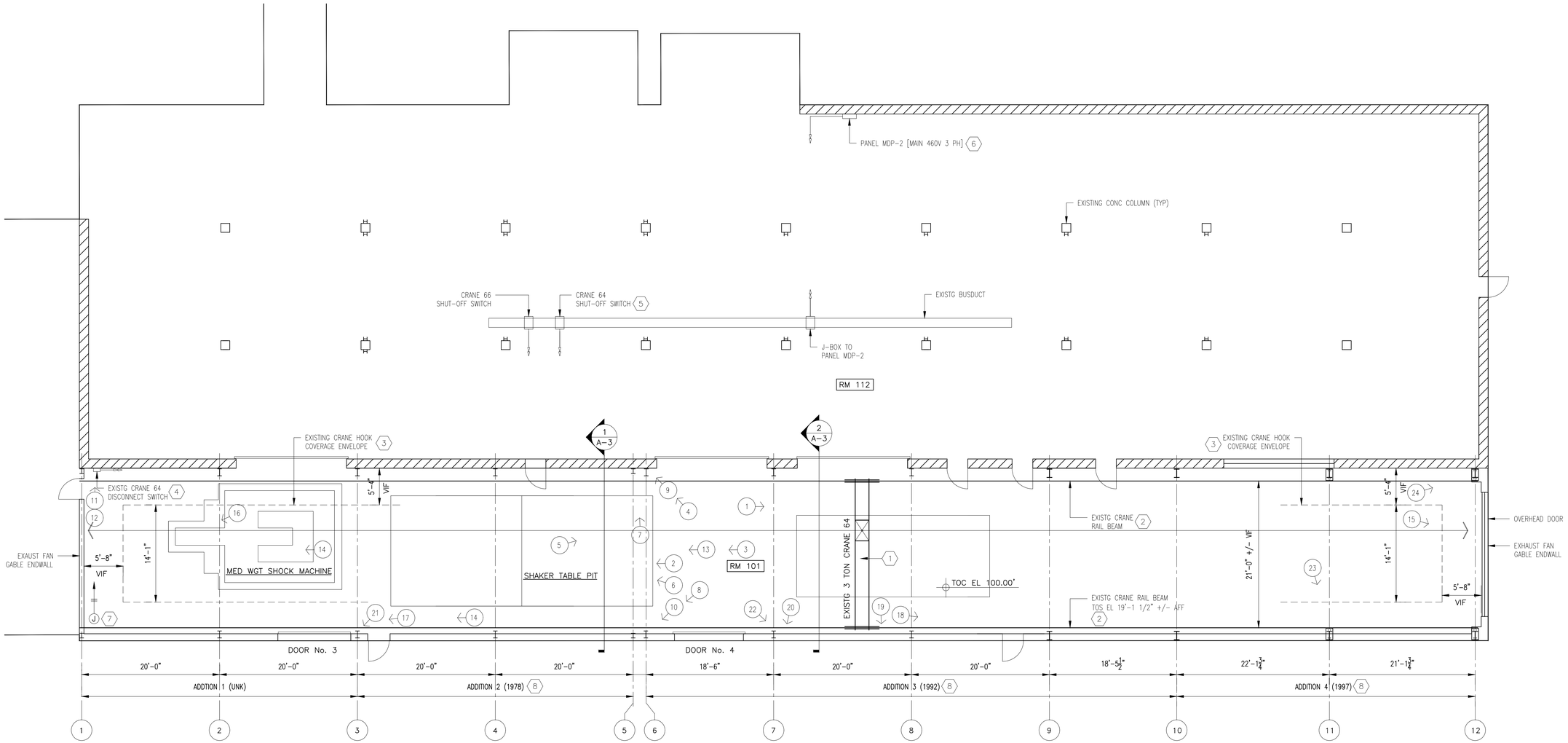

1 PLAN – EXISTING CONDITIONS

SCALE: 1/8" = 1'

(1) = APPROX PHOTOGRAPH LOCATION – SEE SHEET A-5 AND A-6

NOTES:

1. EXISTING BRIDGE CRANE (6000 LB CAPACITY) TO BE REMOVED AND REPLACED
2. EXISTING CRANE RAILS, SUPPORTING W12x RAIL BEAMS, AND CONDUCTOR SYSTEM. W12x RAIL BEAMS TO REMAIN. CRANE RAILS AND CONDUCTOR SYSTEM TO BE REMOVED AND REPLACED TO ACCOMMODATE NEW BRIDGE CRANE SYSTEM (2)
3. EXISTING CRANE HOOK ENVELOPE (APPROXIMATE)
4. EXISTING CRANE POWER DISCONNECT SWITCH (600V 3PH 30 AMP 20HP MAX)
5. EXISTING ELECTRIC BUSDUCT WITH SECOND CRANE POWER DISCONNECT / SHUT-OFF SWITCH TO REMAIN
6. EXISTING ELECTRIC PANEL MDP-2 (460V 3PH) WITH 125 AMP BUSDUCT CIRCUIT BREAKER TO REMAIN
7. POWER FEED TO CRANE RAIL CONDUCTORS FROM DISCONNECT SWITCH TO BE REPLACED
8. APPROXIMATE DATE (YEAR) OF HIGH-BAY BUILDING ADDITION CONSTRUCTION

1/8"=1'-0" 5' 0' 5' 10' 15' 20' 25' 30' 35' 40'

FINAL SET
10 DEC 25

SYMBOL	DESCRIPTION	DATE	APP'VD
2	ADDENDUM No. 1	7/26	G.O.
1	ADD BID OPTION No. 1	12/25	G.O.

REVISIONS

DSGN. G.O. 8/2025
DR. G.O. 8/2025
BR. HD. D.W.
DIV. HD. J.J.
APPROVED
DATE
SATISFACTORY TO
DATE

DEPARTMENT OF THE NAVY
NAVAL FACILITIES ENGINEERING SYSTEMS COMMAND
NAVAL STATION NEWPORT
NEWPORT, RHODE ISLAND

CRANE No. 64 IMPROVEMENTS
BUILDING 114 NUWC
PLAN – EXISTING CONDITIONS

CODE ID. NO. 80091
DRAWING SIZE: ANSI D
SCALE: AS NOTED
CONST. CONTRACT NO. XXXXXX-XXXX-XX
NAVFAC DRAWING NO. XXXXXX
NSN DRAWING NO. XXXXXX
SHEET 3 OF 8

A-1

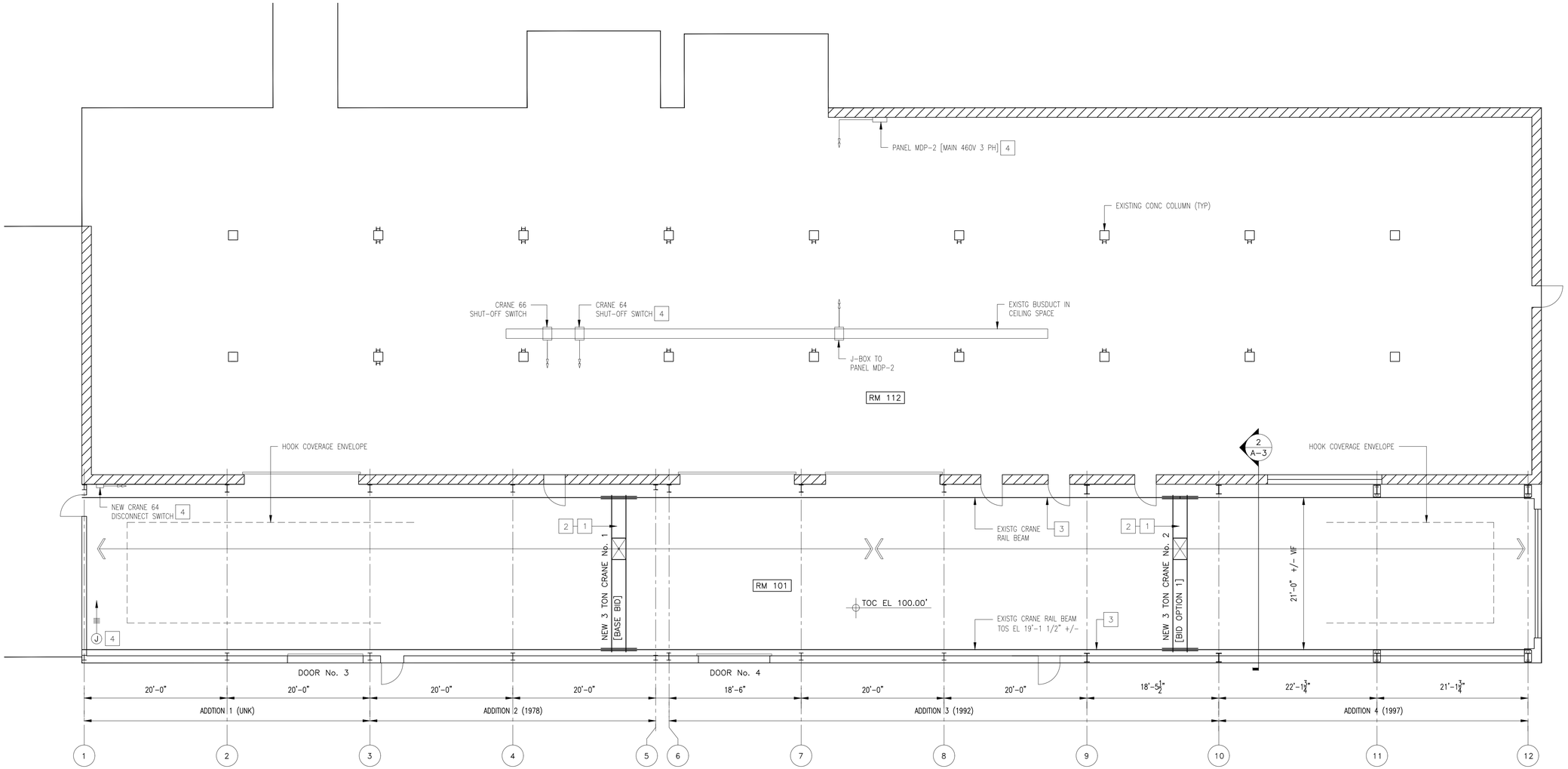

1 PLAN – NEW CRANES INSTALLATION

SCALE: 1/8" = 1'

1 = PHOTOGRAPH LOCATION – SEE SHEET A-5 AND A-6

NOTES:

1. PROVIDE ONE (1) NEW 3-TON OVERHEAD ELECTRIC TRAVELING (OET) BRIDGE CRANE [BASE BID]. PROVIDE A SECOND NEW 3-TON OET CRANE AS BID OPTION No. 1. CRANE MAXIMUM HOOK HEIGHT APPROXIMATELY 16'-1". MAINTAIN EXISTING CRANE HOOK OPERATING ENVELOPE. CRANE No. 1 IS BASE BID AND CRANE No. 2 IS BID OPTION 1.
2. BRIDGE CRANES SHALL BE EQUIPPED WITH ANTI-COLLISION SYSTEMS TO MAINTAIN A MINIMUM DISTANCE OF '2(Lmax)+A' BETWEEN THE TWO CRANES. SEE DET 3/A-3 AND SHEET A-4. [BID OPTION No. 1]
3. PROVIDE NEW CRANE RAILS AND CONDUCTOR SYSTEM SIZED FOR TWO CRANES. EXISTING SUPPORTING W12x RAIL BEAMS SHALL REMAIN FOR RE-USE. [BASE BID]
4. A 460V PANELBOARD 'MDP-2' IS LOCATED IN ROOM 112 FOR NEW CRANE POWER CONNECTION BY WAY OF A BUSDUCT MOUNTED IN THE CEILING OF ROOM 112. 125A/3P BREAKER IN PANEL MDP-2 LABELED "BUSDUCT'. THE CONTRACTOR SHALL PROVIDE AND INSTALL NEW [BASE BID]:

   (1) A NEW 60A, 3P BUS PLUG TO REPLACE EXISTING BUS PLUG.
   (2) HEAVY-DUTY, NON-FUSED DISCONNECT SAFETY SWITCH (600V, 60A, 3P, 4W + GND) WITH (3) 60A FUSES. FUSES TO BE CLASS RK-1 OR CLASS R AS RECOMMENDED BY CRANE MANUFACTURER AND INSTALLER.
   (3) CONDUCTORS AND CONDUIT (4-#6 + 1-#10 GND IN 1" DIA. EMT) FROM BUSDUCT SHUT OFF CONNECTION TO THE NEW WALL MOUNTED SAFETY SWITCH CONTROL BOX.
   (4) CONDUCTORS AND CONDUIT (4-#6 + 1-#10 GND IN 1" DIA. EMT) FROM NEW WALL MOUNTED SAFETY DISCONNECT SWITCH TO THE CRANE COLLECTOR BARS (BUSHING REQUIRED).

CONTRACTOR SHALL COORDINATE WITH CRANE MANUFACTURER AND INSTALLER TO DETERMINE AND CONFIRM CRANE POWER REQUIREMENTS AND CRANES FULL LOAD AMPERAGE DEMAND FOR TWO (2) CRANES.

1/8"=1'-0" 5' 0' 5' 10' 15' 20' 25' 30' 35' 40'

FINAL SET
10 DEC 25

SYMBOL	DESCRIPTION	DATE	APP'VD
2	ADDENDUM No. 1	7/26	G.O.
1	ADD BID OPTION No. 1	12/25	G.O.

REVISIONS

DSGN. G.O. 8/2025
DR. G.O. 8/2025
BR. HD. D.W.
DIV. HD. J.J.
APPROVED
DATE
SATISFACTORY TO
DATE

DEPARTMENT OF THE NAVY
NAVAL FACILITIES ENGINEERING SYSTEMS COMMAND
NAVAL STATION NEWPORT
NEWPORT, RHODE ISLAND

CRANE No. 64 IMPROVEMENTS
BUILDING 114 NUWC
PLAN – NEW CRANES INSTALL

CODE ID. NO. 80091
DRAWING SIZE: ANSI D
SCALE: AS NOTED
CONST. CONTRACT NO. XXXXXX-XXXX-XX
NAVFAC DRAWING NO. XXXXXX
NSN DRAWING NO. XXXXXX
SHEET 4 OF 8

A-2

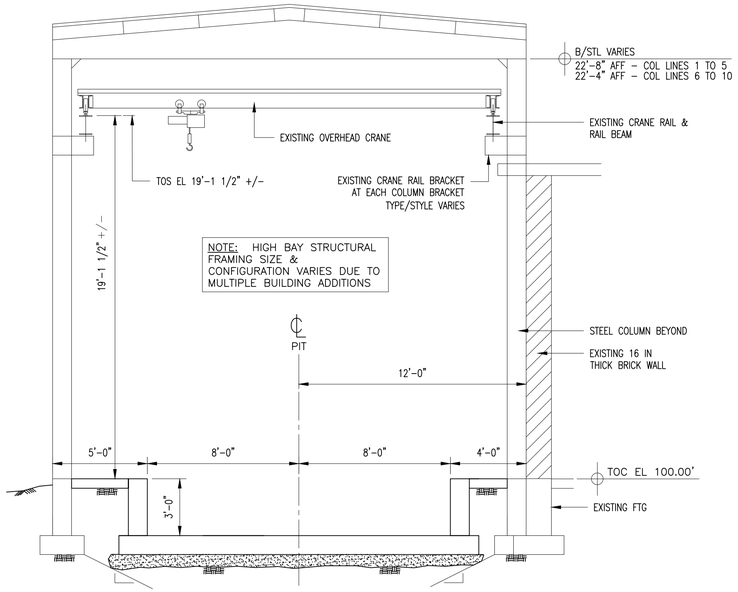

1 / A3 SECTION – HIGH BAY
SCALE: 1/4 IN = 1 FT LOOKING NORTH

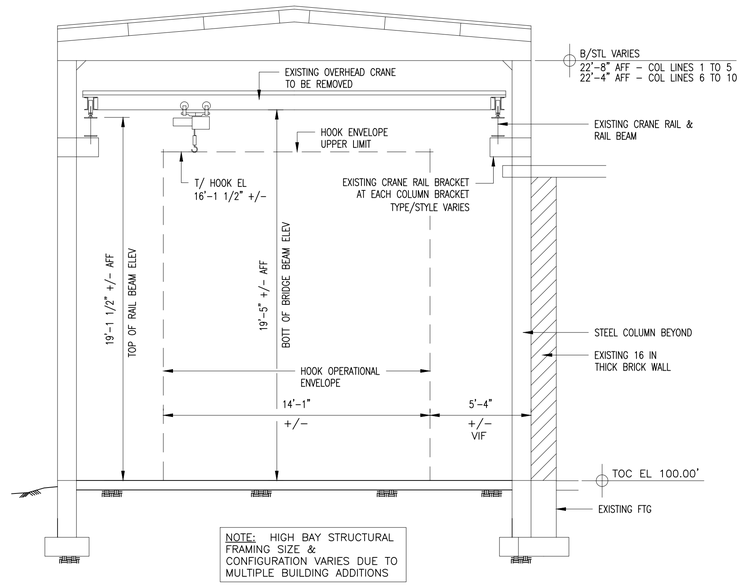

2 / A3 SECTION – HIGH BAY
SCALE: 1/4 IN = 1 FT LOOKING NORTH

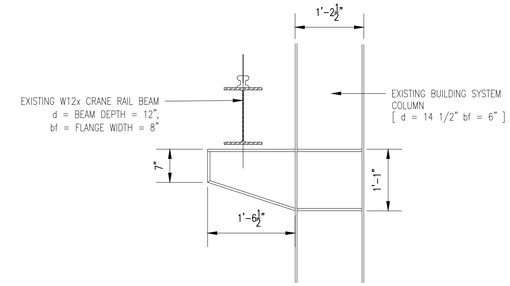

B / A3 DETAIL
SCALE: 3/4 IN = 1 FT
[TYPE 2 BRACKET – COL LINES 6 TO 10]

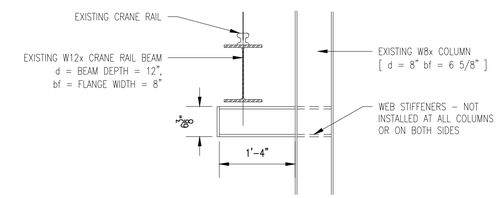

A / A3 DETAIL
SCALE: 3/4 IN = 1 FT
[TYPE 1 BRACKET – COL LINES 1 TO 5]

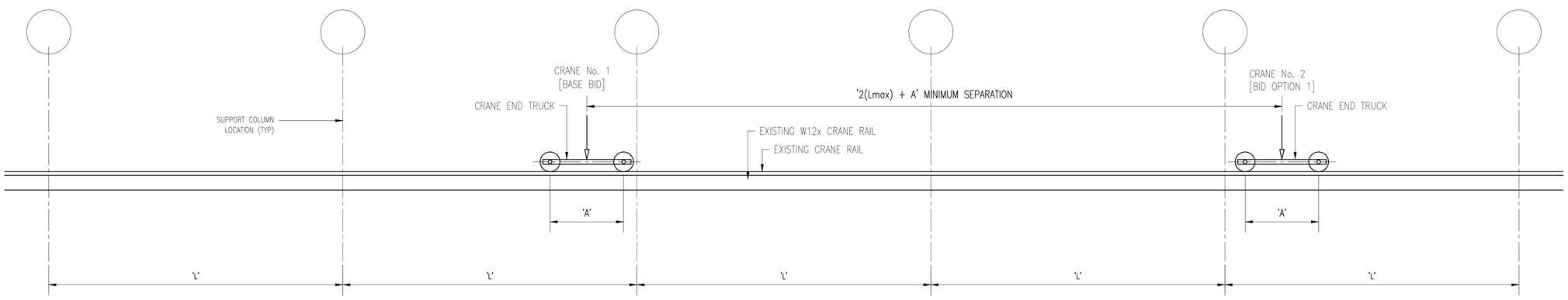

3 / A3 PARTIAL ELEVATION – NEW CRANES
SCALE: 1/4 IN = 1 FT LOOKING EAST

NOTES:
1. L = COLUMN SPACING VARIES, SEE PLANS. VERIFY IN FIELD.
2. Lmax = MAXIMUM COLUMN SPACING DIMENSION. CONFIRM THIS DIMENSION IN FIELD.
3. A = NEW CRANE END TRUCK WHEEL BASE DIMENSION
4. 2(Lmax)+A = MINIMUM SEPARATION BETWEEN CRANE 1 AND CRANE 2
5. CRANES SHALL BE EQUIPPED WITH CRANE ANTI-COLLISION SENSOR SAFETY SYSTEMS [BID OPTION 1]
6. W12x CRANE RAIL BEAM IS OF UNKNOWN WEIGHT. BEAM DEPTH IS 12 IN. AND BEAM FLANGE WIDTH IS 8 IN.
7. NEW CRANE SELF-WEIGHT MUST BE LESS THAN EXISTING CRANE
8. CRANE RAIL SHALL BE REPLACED WITH NEW RAIL. W12x CRANE RAIL BEAM IS TO REMAIN FOR RE-USE [BASE BID] (2)
9. TYPE 1 RAIL SUPPORT BRACKET AT COL LINES 1 TO 5 – DET A/A-3. TYPE 2 RAIL SUPPORT BRACKET AT COL LINES 6 TO 10 – DET B/A-3. TYPE 3 RAIL SUPPORT BRACKET AT COL LINES 11 AND 12.

GRAPHIC SCALE

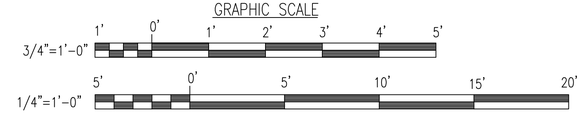

FINAL SET
10 DEC 25

SYMBOL	DESCRIPTION	DATE	APP'VD
1	ADDENDUM No. 1	7/26	G.O.
2	ADD BID OPTION No. 1	12/25	G.O.

REVISIONS

DSGN. G.O. 8/2025
DR. G.O. 8/2025
BR. HD. D.W.
DIV. HD. J.J.
APPROVED
DATE

SATISFACTORY TO DATE

DEPARTMENT OF THE NAVY
NAVAL FACILITIES ENGINEERING SYSTEMS COMMAND
NAVAL STATION NEWPORT
NEWPORT, RHODE ISLAND

CRANE No. 64 IMPROVEMENTS
BUILDING 114 NUWC
SECTIONS & ELEVATIONS

CODE ID. NO. 80091
DRAWING SIZE: ANSI D
SCALE: AS NOTED
CONST. CONTRACT NO. XXXXXX-XXXX-XX
NAVFAC DRAWING NO. XXXXXX
NSN DRAWING NO. XXXXXX
SHEET 5 OF 8

A-3

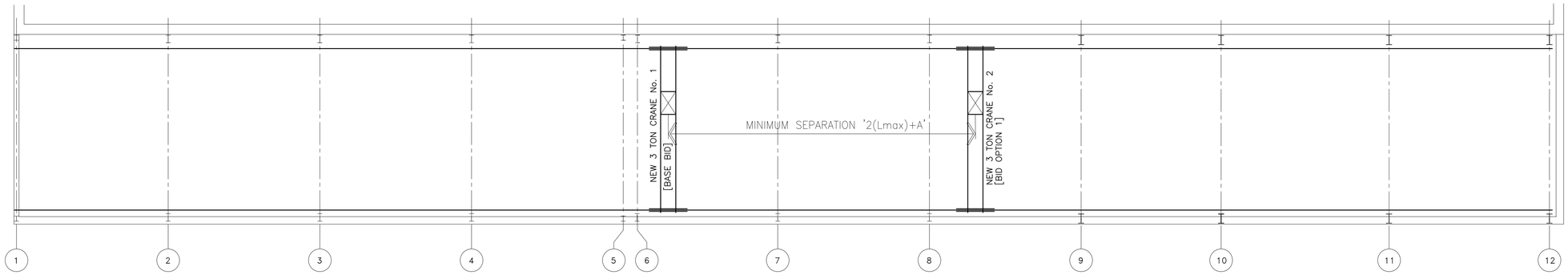

CRANE POSITION LIMITS – TYPICAL

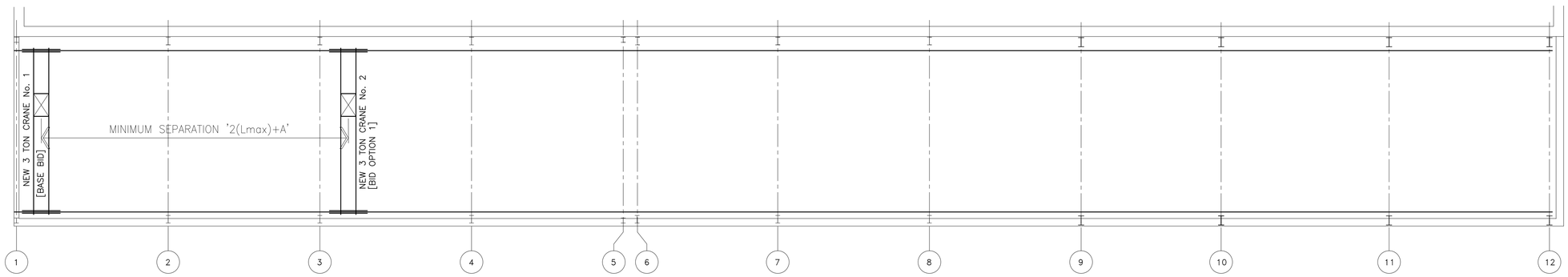

MAXIMUM CRANE POSITION LIMITS – NORTH END

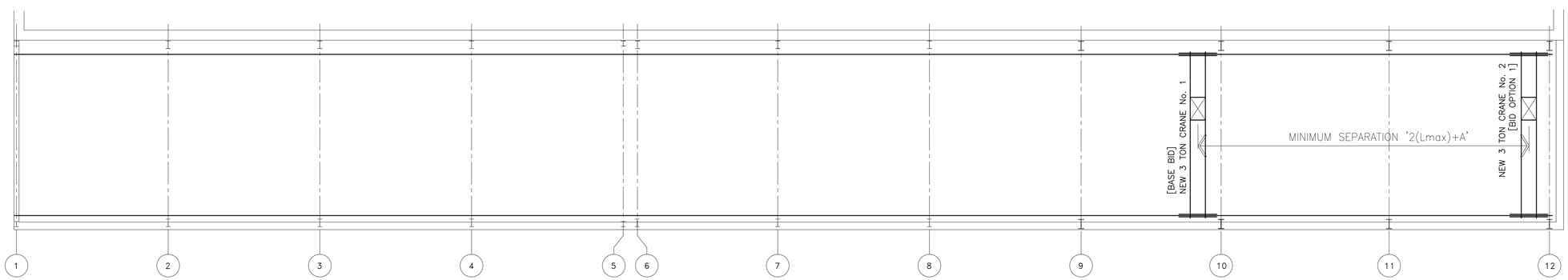

MAXIMUM CRANE POSITION LIMITS – SOUTH END

1 PLAN – NEW CRANES TRAVEL LIMITS

SCALE: 1/8" = 1'

NOTES:

1. L = COLUMN SPACING VARIES, SEE PLANS. VERIFY IN FIELD.
2. Lmax = MAXIMUM COLUMN SPACING DIMENSION. CONFIRM THIS DIMENSION IN FIELD.
3. A = NEW CRANE END TRUCK WHEEL BASE DIMENSION
4. 2(Lmax)+A = MINIMUM SEPARATION BETWEEN CRANE 1 AND CRANE 2
5. CRANES SHALL BE EQUIPPED WITH CRANE ANTI-COLLISION SENSOR SAFETY SYSTEMS TO MAINTAIN MINIMUM SEPARATION DISTANCE LISTED IN NOTE 4 [BID OPTION 1]
6. OUT-OF-SERVICE CRANE SHALL BE PLACED AT FURTHEST POSITION FROM OPERATING CRANE. IF CRANE 1 IS OUT-OF-SERVICE, IT SHALL BE POSITIONED AT THE FURTHEST NORTH ALONG THE CRANE RAIL. IF CRANE 2 IS OUT-OF-SERVICE, IT SHALL BE POSITIONED AT THE FURTHEST POINT SOUTH ALONG THE CRANE RAIL. [BID OPTION 1].
7. TYPE 1 RAIL SUPPORT BRACKET AT COL LINES 1 TO 5 – DET A/A-3. TYPE 2 RAIL SUPPORT BRACKET AT COL LINES 6 TO 10 – DET B/A-3. TYPE 3 RAIL SUPPORT BRACKET AT COL LINES 11 AND 12.

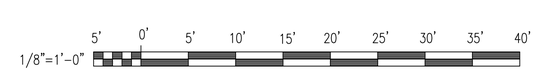

FINAL SET
10 DEC 25

SYMBOL	DESCRIPTION	DATE	APP'VD
1	ADD BID OPTION No. 1	12/25	G.O.

REVISIONS

DSGN. G.O. 6/2025
DR. G.O. 6/2025
BR. HD. D.W.
DIV. HD. J.J.
APPROVED
DATE

SATISFACTORY TO DATE

DEPARTMENT OF THE NAVY
NAVAL FACILITIES ENGINEERING SYSTEMS COMMAND
NAVAL STATION NEWPORT
NEWPORT, RHODE ISLAND

CRANE No. 64 IMPROVEMENTS
BUILDING 114 NUWC
PLAN – CRANE MOVEMENT LIMITS

CODE ID. NO. 80091
DRAWING SIZE: ANSI D
SCALE: AS NOTED
CONST. CONTRACT NO. XXXXXX–XXXX–XX
NAVFAC DRAWING NO. XXXXXX
NSN DRAWING NO. XXXXXX
SHEET 6 OF 8

A–4

P H O T O 1

114 HIGH BAY – LOOKING SOUTH

P H O T O 2

114 HIGH BAY – LOOKING NORTH

P H O T O 3

CRANE 64 – LOOKING NORTH

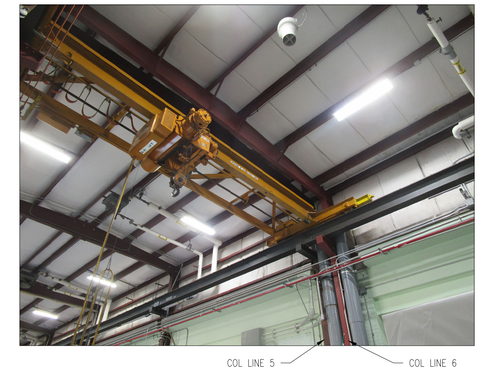

P H O T O 4

CRANE 64 WITH END TRUICK – LOOKING NORTH EAST

P H O T O 5

CRANE 64 WITH END TRUCK– LOOKING SOUTH EAST

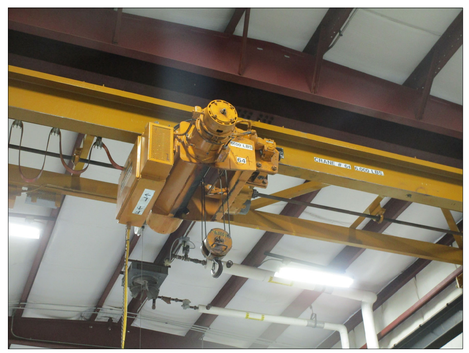

P H O T O 6

CRANE 64 HOIST – LOOKING NORTH

P H O T O 7

END TRUCK & RAIL AT COLUMN 5 & 6 – LOOKING EAST

P H O T O 8

END TRUCK, RAIL, AND CONDUCTORS AT COLUMN 5 & 6 – LOOKING WEST

P H O T O 9

END TRUCK & RAIL COLUMN BRACKETS AT COL 5 & 6– LOOKING NORTH EAST

P H O T O 10

END TRUCK & RAIL COLUMN BRACKETS AT COL 5 & 6– LOOKING WEST
NOTE DIFFERENT COLUMN BRACKETS FOR RUNWAY RAIL SUPPORT

P H O T O 11

CRANE 64 DISCONNECT SWITCH – LOOKING EAST

P H O T O 12

CRANE 64 DISCONNECT SWITCH – LOOKING EAST

L E G E N D

(1) PHOTO REFERENCE

FINAL SET
10 DEC 25

SYMBOL	DESCRIPTION	DATE	APP'VD
1	ADD BID OPTION No. 1	12/25	G.O.

REVISIONS

DSGN. G.O. 8/2025
DR. G.O. 8/2025
BR. HD. D.W.
DIV. HD. J.J.
APPROVED
DATE

SATISFACTORY TO DATE

DEPARTMENT OF THE NAVY
NAVAL FACILITIES ENGINEERING SYSTEMS COMMAND
NAVAL STATION NEWPORT
NEWPORT, RHODE ISLAND

CRANE No. 64 IMPROVEMENTS
BUILDING 114 NUWC
PHOTOS – EXISTING CONDITIONS

CODE ID. NO. 80091
DRAWING SIZE: ANSI D
SCALE: AS NOTED
CONST. CONTRACT NO. XXXXXX–XXXX–XX
NAVFAC DRAWING NO. XXXXXX
NSN DRAWING NO. XXXXXX
SHEET 7 OF 8

A–5

P H O T O 13

114 HIGH BAY – LOOKING NORTH

P H O T O 14

114 HIGH BAY – LOOKING NORTH

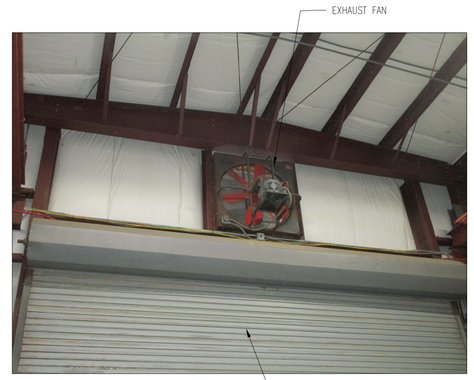

P H O T O 15

EXHAUST FAN – NORTH END WALL

P H O T O 16

CRANE 64 POSITIONED AT NORTH END – LOOKING NORTH

P H O T O 17

CRANE RAIL AND W12x RAIL BEAM – LOOKING NORTH
NOTE CONDUCTORS – WEST SIDE ONLY

P H O T O 18

CRANE RAIL AND W12x RAIL BEAM – LOOKING SOUTH
NOTE CONDUCTORS – WEST SIDE ONLY

P H O T O 19

CRANE RAIL – LOOKING WEST

P H O T O 20

CRANE RAIL AND W12x RAIL BEAM – LOOKING NORTH WEST

P H O T O 21

RAIL BEAM COLUMN BRACKET TYPE 1 AT COLS 1 TO 5 – LOOKING WEST

P H O T O 22

RAIL BEAM COLUMN BRACKET TYPE 2 AT COLS 6 TO 10 – LOOKING SOUTH WEST

P H O T O 23

COLUMN LINE 11 – LOOKING WEST
NOTE THIRD RAIL BEAM BRACKET TYPE 3

P H O T O 24

COLUMN LINE 12 – LOOKING SOUTH
NOTE THIRD RAIL BEAM BRACKET TYPE 3
NOTE OVERHEAD DOOR HOOD AND RAIL END STOP

FINAL SET
10 DEC 25

SYMBOL	DESCRIPTION	DATE	APP'VD
1	ADD BID OPTION No. 1	12/25	G.O.

REVISIONS

DSGN. G.O. 8/2025
DR. G.O. 8/2025
BR. HD. D.W.
DIV. HD. J.J.
APPROVED
DATE

SATISFACTORY TO DATE

DEPARTMENT OF THE NAVY
NAVAL FACILITIES ENGINEERING SYSTEMS COMMAND
NAVAL STATION NEWPORT
NEWPORT, RHODE ISLAND

CRANE No. 64 IMPROVEMENTS
BUILDING 114 NUWC
PHOTOS – EXISTING CONDITIONS

CODE ID. NO. 80091
DRAWING SIZE: ANSI D
SCALE: AS NOTED
CONST. CONTRACT NO.
XXXXXX–XXXX–XX
NAVFAC DRAWING NO.
XXXXXX
NSN DRAWING NO.
XXXXXX
SHEET 8 OF 8

A–6