SPECIFICATIONS
(For Construction Contract)

Backcheck
Solicitation Number W9128F26QA001

Upper Basin Resident Office at Garrison Powerplant

Garrison Dam, ND

May 2026

US Army Corps of Engineers
Omaha District

This page was intentionally left blank for duplex printing.

PROJECT TABLE OF CONTENTS

DIVISION 01 - GENERAL REQUIREMENTS

01 12 00 CONSTRUCTION GENERAL
01 20 00 PRICE AND PAYMENT PROCEDURES
01 30 00.24 OTHER ADMINISTRATIVE AND SPECIAL REQUIREMENTS
01 33 00 SUBMITTAL PROCEDURES
01 35 26 GOVERNMENTAL SAFETY REQUIREMENTS
01 42 00 SOURCES FOR REFERENCE PUBLICATIONS
01 45 00 QUALITY CONTROL
01 45 00.15 10 RESIDENT MANAGEMENT SYSTEM CONTRACTOR MODE (RMS CM)
01 57 20.00 10 ENVIRONMENTAL PROTECTION

DIVISION 02 - EXISTING CONDITIONS

02 41 00 DEMOLITION
02 82 00 ASBESTOS REMEDIATION

DIVISION 09 - FINISHES

09 06 00 SCHEDULES FOR FINISHES
09 65 00 RESILIENT FLOORING
09 68 00 CARPETING
09 90 00 PAINTS AND COATINGS

DIVISION 10 - SPECIALTIES

10 44 16 FIRE EXTINGUISHERS

DIVISION 12 - FURNISHINGS

12 21 00 WINDOW BLINDS
12 50 00.13 10 FURNITURE AND FURNITURE INSTALLATION
12 59 00 SYSTEMS FURNITURE

DIVISION 26 - ELECTRICAL

26 20 00 INTERIOR DISTRIBUTION SYSTEM
26 51 00 INTERIOR LIGHTING

DIVISION 27 - COMMUNICATIONS

27 10 00 BUILDING TELECOMMUNICATIONS CABLING SYSTEM

DIVISION 28 - ELECTRONIC SAFETY AND SECURITY

28 31 60 INTERIOR FIRE ALARM SYSTEM, NON-ADDRESSABLE

-- End of Project Table of Contents --

This page was intentionally left blank for duplex printing.

SECTION TABLE OF CONTENTS

DIVISION 01 - GENERAL REQUIREMENTS

SECTION 01 12 00

CONSTRUCTION GENERAL

PART 1 GENERAL

1.1 SCOPE
1.2 PROTECTION OF EXISTING FACILITIES AND WORKS
1.3 DISPOSITION OF CONSTRUCTION FACILITIES
1.4 COOPERATION WITH OTHER CONTRACTORS
1.5 ORDER OF WORK
1.6 SUBMITTALS
1.7 SPECIAL INSTRUCTIONS FOR PROGRESS CHARTS
1.8 WARRANTY OF CONSTRUCTION (MAR 1994)
1.9 TELEPHONE/INTERNET
1.10 PORTABLE TOILETS
1.11 AS-BUILT DRAWINGS
1.12 FEDERAL HOLIDAYS AND WORKING HOURS

PART 2 NOT USED

PART 3 NOT USED

-- End of Section Table of Contents --

SECTION 01 12 00

CONSTRUCTION GENERAL

PART 1 GENERAL

1.1 SCOPE

The work covered in this section is outlined as a statement of construction requirements common to all the work. Specific requirements for materials and installations are provided under the Technical Sections herewith. No claims for extras shall be made on account of items presumed to have been omitted from this section.

1.2 PROTECTION OF EXISTING FACILITIES AND WORKS

The Contractor shall be responsible for the protection of the work area from damage and upon completion of the work shall leave existing works in a condition equal to that which existed when the work started. All work, storage of materials, and construction plant shall be kept within the limits of the areas assigned. Prior to construction operations, the Contractor shall confer with the Contracting Officer's representative to determine the proximity of any possible under-ground obstructions, pipe or equipment which could be damaged as a result of construction operations. Existing utility lines that are shown on the drawings or the locations are otherwise made known to the Contractor shall be protected from damage, and if damaged, shall be repaired by the Contractor at no additional expense to the Government. In the event that the Contractor damages any existing utility lines that are not shown or the locations of which have not been made known to the Contractor, the Contractor shall immediately notify the Contracting Officer. The Contracting Officer will review the information and discuss with the Contractor how to proceed. The Contractor will be responsible for the protection of structures from any structural damage during the construction operations. Roads and surfaces shall be protected from damage by the work or if damaged shall be repaired with equal materials at no additional expense to the Government. At all times the plant and work areas shall be kept in a condition conducive to safety of workmen and the public and neat in appearance. Waste or surplus materials shall not be allowed to accumulate in the construction areas. Contractor is responsible for coordinating all lockout/tagout activities with the powerplant electricians prior to performing work, including use of clearances/lock boxes, in performance of work. Contractor is to follow all lockout/tagout policies of the Garrison Project in execution of work.

1.3 DISPOSITION OF CONSTRUCTION FACILITIES

All buildings and facilities constructed by the Contractor shall be maintained in a satisfactory condition with strict observance of the rules of sanitation, safety and order as may be established by the Contracting Officer. Prior to final payment under the contract, all buildings and facilities constructed by the Contractor for the Contractor's use shall be removed from the site by the Contractor.

1.4 COOPERATION WITH OTHER CONTRACTORS

The Contractor shall cooperate and coordinate work with that of others

working in the area during the life of this contract. The Contractor shall coordinate work with others to avoid undue interference and shall conduct operations, other than approved required access, within the limits of the assigned construction area or construction right-of-way limits. The Contractor shall cooperate with others as necessary in the interest of timely completion of all work and in the event of disagreement the decision of the Contracting Officer shall be final.

1.5 ORDER OF WORK

The sequence of operations shall be maintained so that the maximum amount of work may be done under favorable working conditions in accordance with the completion time set forth. The Contractor shall submit for approval, within 15 days after receipt of notice to proceed a narrative description of the proposed methods of operation.

1.6 SUBMITTALS

Government approval is required for submittals with a "G" designation; submittals not having a "G" designation are for information only. When used, a designation following the "G" designation identifies the office that will review the submittal for the Government. The following shall be submitted in accordance with Section 01 33 00 SUBMITTAL PROCEDURES:

SD-01 Preconstruction Submittals

Proposed Methods of Operation; G-AO

Progress Charts; G-AO

SD-11 Closeout Submittals

Warranty of Construction

(List of warranties with copy of each)

Final As-Built Drawings; G, DO

1.7 SPECIAL INSTRUCTIONS FOR PROGRESS CHARTS

To be submitted in accordance with the SECTION 00 72 00, GENERAL CONDITIONS (CONTRACT CLAUSES) clause entitled "Schedule for Construction Contracts" shall indicate the required data for each of the principal features of the work. Contract changes or modifications will not include extensions of time unless the updated progress chart shows that the contract completion date is delayed due to the affect of the change on one or more principal features of the work.

1.8 WARRANTY OF CONSTRUCTION (MAR 1994)

(a) In addition to any other warranties in this contract, the Contractor warrants, except as provided in paragraph (i) of this clause, that work performed under this contract conforms to the contract requirements and is free of any defect in equipment, material, or design furnished, or workmanship performed by the Contractor or any subcontractor or supplier at any tier.

(b) This warranty shall continue for a period of 1 year from the date of final acceptance of the work. If the Government takes possession of any

part of the work before final acceptance, this warranty shall continue for a period of 1 year from the date the Government takes possession.

(c) The Contractor shall remedy at the Contractor's expense any failure to conform, or any defect. In addition, the Contractor shall remedy at the Contractor's expense any damage to Government-owned or controlled real or personal property, when that damage is the result of--

(1) The Contractor's failure to conform to contract requirements; or

(2) Any defect of equipment, material, workmanship, or design furnished.

(d) The Contractor shall restore any work damaged in fulfilling the terms and conditions of this clause. The Contractor's warranty with respect to work repaired or replaced will run for 1 year from the date of repair or replacement.

(e) The Contracting Officer shall notify the Contractor, in writing, within a reasonable time after the discovery of any failure, defect, or damage.

(f) If the Contractor fails to remedy any failure, defect, or damage within a reasonable time after receipt of notice, the Government shall have the right to replace, repair, or otherwise remedy the failure, defect, or damage at the Contractor's expense.

(g) With respect to all warranties, express or implied, from subcontractors, manufacturers, or suppliers for work performed and materials furnished under this contract, the Contractor shall--

(1) Obtain all warranties that would be given in normal commercial practice;

(2) Require all warranties to be executed, in writing, for the benefit of the Government, if directed by the Contracting Officer; and

(3) Enforce all warranties for the benefit of the Government, if directed by the Contracting Officer.

(h) In the event the Contractor's warranty under paragraph (b) of this clause has expired, the Government may bring suit at its expense to enforce a subcontractor's, manufacturer's, or supplier's warranty.

(i) Unless a defect is caused by the negligence of the Contractor or subcontractor or supplier at any tier, the Contractor shall not be liable for the repair of any defects of material or design furnished by the Government nor for the repair of any damage that results from any defect in Government-furnished material or design.

(j) This warranty shall not limit the Government's rights under the Inspection and Acceptance clause of this contract with respect to latent defects, gross mistakes, or fraud. (FAR 52.246-21)

1.9 TELEPHONE/INTERNET

The Contractor is responsible for arranging telephone/Internet service for the Contractor's trailer through the local telephone company.

1.10 PORTABLE TOILETS

Toilet facilities will not be available for Contractor's use. The Contractor shall provide and maintain portable toilets for use by the Contractor's staff. Toilet(s) shall be placed at the location directed by the Contracting Officer. To prevent overturning by high winds, all portable toilets shall be anchored down.

Portable toilets will only be required if the Contractor brings a job trailer. If a minimal staff is anticipated onsite (<10) reasonable use of building facilities will be permitted.

1.11 AS-BUILT DRAWINGS

The Contractor shall provide a marked-up half size drawing to show actual work performed to include necessary sketches, modification drawings, shop drawings and notes. Red ink is to be used for additions and deviations from the contract. Green ink is to be used to indicate work deleted from the contract. The drawings shall be maintained by the Contractor as the work progresses and available for review by the government representatives. The as-built drawings shall be submitted for approval at the completion of the project. The completed set shall be available at time of final inspection.

In accordance with the clause "Payment Under Fixed - Price Construction Contracts", $5,000 will be withheld from payment for the creation of As-Built Drawings until Final As-Built Drawings are delivered to and accepted by the COR.

1.12 FEDERAL HOLIDAYS AND WORKING HOURS

The Contractor will have access to the facility for work during normal plant business hours from 0730 to 1700 hrs Monday through Friday, excluding any federally recognized holidays or observance days. Plant support for LOTO only is available from 0700 to 1600 hrs Monday through Thursday. The Contractor shall plan all work accordingly. These hours will be strictly adhered to unless the Government determines work outside this time is beneficial to the Government or a bilateral modification for extended working hours is executed.

The following Federal legal holidays are observed by this installation:

New Year's Day	1 January
Martin Luther King's Birthday	Third Monday in January
President's Day	Third Monday in February
Memorial Day	Last Monday in May
Juneteenth	19 June
Independence Day	4 July
Labor Day	First Monday in September
Columbus Day	Second Monday in October
Veterans Day	11 November
Thanksgiving Day	Fourth Thursday in November
Christmas Day	25 December

If the wage determination has a discrepancy with the above list of observed Federal holidays, then the wage determination takes precedence.

PART 2 NOT USED

PART 3 NOT USED

-- End of Section --

SECTION TABLE OF CONTENTS

DIVISION 01 - GENERAL REQUIREMENTS

SECTION 01 20 00

PRICE AND PAYMENT PROCEDURES

PART 1 GENERAL

1.1 CONTRACT COST BREAKDOWN
1.2 CONTRACTOR'S INVOICE AND CONTRACT PERFORMANCE STATEMENT
1.2.1 Submission of Invoices
1.3 SINGLE JOB PAYMENT ITEMS
1.3.1 CLIN 0001: Painting/Wall Work
1.3.1.1 Payment
1.3.1.2 Unit of Measure
1.3.2 CLIN 0002: Flooring Removal/Install
1.3.2.1 Payment
1.3.2.2 Unit of Measure
1.3.3 CLIN 0003: Conference Room Door Modification
1.3.3.1 Payment
1.3.3.2 Unit of Measure
1.3.4 CLIN 0004: Fire Protection Work
1.3.4.1 Payment
1.3.4.2 Unit of Measure
1.3.5 CLIN 0005: Electrical Demo/Install
1.3.5.1 Payment
1.3.5.2 Unit of Measure
1.3.6 CLIN 0006: Telecommunication Demo/Install
1.3.6.1 Payment
1.3.6.2 Unit of Measure
1.3.7 CLIN 0007: Furniture Removal/Procurement/Install
1.3.7.1 Payment
1.3.7.2 Unit of Measure
1.3.8 CLIN 0008: Drawing Updates/Schedule Management
1.3.8.1 Payment
1.3.8.2 Unit of Measure

PART 2 PRODUCTS

PART 3 EXECUTION

-- End of Section Table of Contents --

SECTION 01 20 00

PRICE AND PAYMENT PROCEDURES

PART 1 GENERAL

1.1 CONTRACT COST BREAKDOWN

The Contractor must furnish within 30 days after the date of Notice to Proceed, and prior to the submission of its first partial payment estimate, a breakdown of its single job pay item or items which will be reviewed by the Contracting Officer as to propriety of distribution of the total cost to the various accounts. Any unbalanced items as between early and late payment items or other discrepancies will be revised by the Contracting Officer to agree with a reasonable cost of the work included in the various items. This Contract cost breakdown will then be utilized as the basis for progress payments to the Contractor.

1.2 CONTRACTOR'S INVOICE AND CONTRACT PERFORMANCE STATEMENT

1.2.1 Submission of Invoices

If DFARS Clause 252.232-7006 Wide Area WorkFlow Payment Instructions is included in the Contract, provide the documents listed in above paragraph CONTENT OF INVOICE in their entirety as attachments in Wide Area Work Flow (WAWF) for each invoice submitted. The maximum size of each WAWF attachment is two megabytes, but there are no limits on the number of attachments. If a document cannot be attached in WAWF due to system or size restriction, provide it as instructed by the Contracting Officer.

1.3 SINGLE JOB PAYMENT ITEMS

Payment items for the work of this Contract for which Contract job payments will be made are listed in the BIDDING SCHEDULE and described below. All costs for items of work, which are not specifically mentioned to be included in a particular job or unit price payment item, are included in the listed job item most closely associated with the work involved. The job price and payment made for each item listed constitutes full compensation for furnishing all plant, labor, materials, and equipment, and performing any associated Contractor quality control, environmental protection, meeting safety requirements, tests and reports, and for performing all work required for which separate payment is not otherwise provided.

1.3.1 CLIN 0001: Painting/Wall Work

1.3.1.1 Payment

Payment will be made for all aspects of work to surface, paint walls, complete on drywall or plaster, primer and 2 finish coats, with roller including tipping fees over 1700 square foot.

1.3.1.2 Unit of Measure

Unit of measure: Job.

1.3.2 CLIN 0002: Flooring Removal/Install

1.3.2.1 Payment

Payment will be made for all aspects of work to include materials, labor, equipment, etc. to remove the carpet over 860 square foot, provide wall base, rubber, straight, or cove, standard colors, 4" high, 1/8" thick over 170 linear foot, a carpet tile, tufted nylon, 42 oz., 18" x 18", or 24" x 24" over 96 SY. Work will require asbestos workers for asbestos tile removal. Preparation of asbestos containment area, cover surfaces with polyethylene sheeting, walls, each layer, 6 mil, incl. glue & tape over 1,170 SF. Initial clean-up of Demolition in Asbestos Contaminated Area, isolated work area, includes 4 suits and 1 disposable respirator per day and per worker and includes decontamination of asbestos containment area, final cleaning of protected surface over 900 SF.

1.3.2.2 Unit of Measure

Unit of measure: Job.

1.3.3 CLIN 0003: Conference Room Door Modification

1.3.3.1 Payment

Payment will be made for all aspects of work to include materials, labor, equipment, etc. to provide a door hardware.

1.3.3.2 Unit of Measure

Unit of measure: Job.

1.3.4 CLIN 0004: Fire Protection Work

1.3.4.1 Payment

Payment will be made for all aspects of work to include materials, labor, equipment, etc. to provide 2 Fire Alarm & Detection, detectors, thermal, 136-190 degrees F fixed temp., 15 degrees F rate-of-rise. Provide 4 flexible metallic conduit, steel, 1/2" diameter. Provide a Junction boxes, size 1, 4 hubs. Provide 0.80 CLF wire, copper, stranded, 600 volt, #12, type THW, normal installation conditions in wireway, conduit, cable tray and 40 LF rigid galvanized steel conduit, 1" diameter, to 10' H, including 2 terminations, 2 elbows, 11 beam clamps, and 11 couplings per 100 LF. Provide a fire equipment cabinet, portable extinguisher, single steel box, recessed, D.S. glass in door, aluminum door & frame, 8" x 12" x 27", excludes equipment. Provide Fire extinguisher, CO2, 5 lb.

1.3.4.2 Unit of Measure

Unit of measure: Job.

1.3.5 CLIN 0005: Electrical Demo/Install

1.3.5.1 Payment

Payment will be made for all aspects of work to include materials, labor, equipment, etc. to provide 3 CLF wire, copper, stranded, 600 volt, #12, type THW, normal installation conditions in wireway, conduit, cable tray. Also provide 150 LF rigid galvanized steel conduit, 1" diameter, to 10' H,

incl 2 terminations, 2 elbows, 11 beam clamps, and 11 couplings per 100 LF. Provide 15 LED lamp, 9 W omni LED warm white light bulb E26 medium base 120 volt card.

1.3.5.2 Unit of Measure

Unit of measure: Job.

1.3.6 CLIN 0006: Telecommunication Demo/Install

1.3.6.1 Payment

Payment will be made for all aspects of work to include materials, labor, equipment, etc. to provide 6 Voice/data outlets, one jack & one twin axial opening, excl voice/data devices. Include 6 Junction boxes. Provide 100 LF rigid galvanized steel conduit, 1" diameter, to 10' Height, include 2 terminations, 2 elbows, 11 beam clamps, and 11 couplings per 100 LF. Provide 20 LF Cable tray, ladder type, galvanized steel, 4" deep, 6" rung spacing, 12" wide, to 15' elevation, incl fittings & supports. Provide 4 unshielded twisted pair (UTP) cable, stranded, PVC jacket, #24, 4 pair, category 6. Also provide 5 voice/data wall plate, stainless steel, 1 gang, 2-port, excl voice/data devices. Add 1 voice/data wall plate, stainless steel, 1 gang, 4-port, excl voice/data devices.

1.3.6.2 Unit of Measure

Unit of measure: Job.

1.3.7 CLIN 0007: Furniture Removal/Procurement/Install

1.3.7.1 Payment

Payment will be made for all aspects of work to include materials, labor, equipment, etc. to provide Office systems furniture, free standing, desk tables. Provide 3 desk screens, 6 dividers, M6, 72" W, 9 dividers, M6, 108" W. Provide 6 Office furniture, chairs, office type, task, maximum. Provide 4 office furniture, chairs, conference, upholstered, metal leg, maximum and 2 Office furniture, chairs, side/guest, upholstered, sled base, wood, minimum. Add 2 systems furniture, secretarial workstations.

1.3.7.2 Unit of Measure

Unit of measure: Job.

1.3.8 CLIN 0008: Drawing Updates/Schedule Management

1.3.8.1 Payment

Payment will be made for all aspects of work to include providing as built drawings and work schedule management.

1.3.8.2 Unit of Measure

Unit of measure: Job.

PART 2 PRODUCTS

Not used.

PART 3 EXECUTION

Not used.

-- End of Section --

This page was intentionally left blank for duplex printing.

SECTION TABLE OF CONTENTS

DIVISION 01 - GENERAL REQUIREMENTS

SECTION 01 30 00.24

OTHER ADMINISTRATIVE AND SPECIAL REQUIREMENTS

PART 1 GENERAL

1.1 REFERENCES
1.2 EQUIPMENT OWNERSHIP AND OPERATING EXPENSE SCHEDULE
1.3 CONTRACTOR SUPPLY AND USE OF ELECTRONIC SOFTWARE FOR PROCESSING CONSTRUCTION WAGE RATE REQUIREMENTS STATUTE CERTIFIED LABOR PAYROLLS
1.4 VETERANS EMPLOYMENT EMPHASIS FOR U.S. ARMY CORPS OF ENGINEERS CONTRACTS
1.5 CONTRACTOR PERFORMANCE EVALUATIONS
1.6 ANTITERRORISM (AT)/OPERATIONS SECURITY (OPSEC) PROVISIONS
1.7 CONTRACT DRAWINGS AND SPECIFICATIONS
1.7.1 SETS FURNISHED
1.7.2 DISTRIBUTION
1.7.3 NOTIFICATION OF DISCREPANCIES
1.7.4 OMISSIONS
1.8 SUBMITTALS
1.9 PAYMENT
1.9.1 PROMPT PAYMENT ACT
1.9.2 PAYMENT FOR MATERIALS STORED OFFSITE
1.10 AVAILABILITY AND USE OF UTILITY SERVICES
1.11 TIME EXTENSIONS FOR UNUSUALLY SEVERE WEATHER
1.12 INSURANCE REQUIRED
1.13 SUPERVISION
1.13.1 Superintendent Qualifications
1.13.2 Minimum Communication Requirements
1.13.3 Duties
1.13.4 Non-Compliance Actions
1.14 PRECONSTRUCTION CONFERENCE
1.14.1 Attendees
1.15 CONTRACTOR QUALITY CONTROL (CQC)
1.16 NONDOMESTIC CONSTRUCTION MATERIALS
1.17 DAILY WORK SCHEDULES AND WEEKLY COORDINATION MEETINGS
1.18 PARTNERING
1.18.1 Team-Led (Informal) Partnering
1.19 PROFIT
1.20 LABOR CONDITIONS APPLICABLE TO TEMPORARY FACILITIES
1.21 DRAWING SCALES
1.22 CYBERSECURITY DURING CONSTRUCTION
1.22.1 Contractor Computer Equipment
1.22.1.1 Operating System
1.22.1.2 Anti-Malware Software
1.22.1.3 Passwords and Passphrases
1.22.1.4 Contractor Computer Cybersecurity Compliance Statements

PART 2 NOT USED

PART 3 NOT USED

-- End of Section Table of Contents --

SECTION 01 30 00.24

OTHER ADMINISTRATIVE AND SPECIAL REQUIREMENTS

PART 1 GENERAL

1.1 REFERENCES

The publications listed below form a part of this specification to the extent referenced. The publications are referred to in the text by the basic designation only.

U.S. ARMY CORPS OF ENGINEERS (USACE)

EM 385-1-1	(2024) Safety -- Safety and Occupational Health (SOH) Requirements

1.2 EQUIPMENT OWNERSHIP AND OPERATING EXPENSE SCHEDULE

In accordance with FAR 31.105(d)(2)(i)(b), for the predetermined schedule of construction equipment use rates, use Engineer Pamphlet (EP) 1110-1-8, Construction Equipment Ownership and Operating Expense Schedule. Copies of each regional schedule may be obtained through the following internet site:

https://www.usace.army.mil/Cost-Engineering/EP1110-1-8/.

1.3 CONTRACTOR SUPPLY AND USE OF ELECTRONIC SOFTWARE FOR PROCESSING CONSTRUCTION WAGE RATE REQUIREMENTS STATUTE CERTIFIED LABOR PAYROLLS

a.Use a commercially-available electronic system to process and submit certified payrolls electronically to the Government. The requirements for preparing, processing and providing certified labor payrolls are established by the Wage Rate Requirements statute.

b. Obtain and provide for all access, licenses, and other services required to provide for receipt, processing, certifying, electronically transmitting to the Government, and storing weekly payrolls and other data required for the Contractor to comply with the Wage Rate Requirements statute. Use the electronic payroll service to prepare, process, and maintain the relevant payrolls and basic records during all work under this construction contract. Use an electronic payroll service capable of preserving these payrolls and related basic records for the required three years after contract completion. Obtain and provide electronic system access to the Government, as required to comply with the Wage Rate Requirements over the duration of the construction contract.

The Contractor's provision and use of an electronic payroll processing system must meet the following basic functional criteria:

(1) commercially available;

(2) compliant with appropriate Wage Rate Requirements statute payroll provisions in the FAR;

(3) able to accommodate the required numbers of employees and subcontractors planned to be employed under the contract;

(4) capable of producing an Excel spreadsheet-compatible electronic output of weekly payroll records for export into an Excel spreadsheet to be imported into the contractor's mode of Resident Management System 3.0;

(5) demonstrated security of data and data entry rights;

(6) ability to produce Contractor-certified electronic versions of weekly payroll data;

(7) ability to identify erroneous entries and track the data/time of all versions of the certified Wage Rate Requirements statute payrolls submitted to the government over the life of the contract;

(8) capable of generating a durable record copy in a Compact Disc (CD) or Digital Versatile Disc (DVD) and Portable Document Format (PDF) file record of data from the system database at the end of the contract closeout. Provide this durable record copy of data from the electronic payroll processing system to the Government during contract closeout.

d. Include all Contractor-incurred costs related to the Contractor's provision and use of an electronic payroll processing service in the Contractor's price for the overall work under the contract. Do not include the costs for compliance with the Wage Rate Requirements statute by using electronic payroll processing services as a separately bid or reimbursed item under this contract.

1.4 VETERANS EMPLOYMENT EMPHASIS FOR U.S. ARMY CORPS OF ENGINEERS CONTRACTS

In addition to complying with the requirements outlined in FAR Part 22.13, FAR Provision 52.222-38, FAR Clause 52.222-35, FAR Clause 52.222-37, DFARS 222.13 and Department of Labor regulations, U.S. Army Corps of Engineers (USACE) contractors and subcontractors at all tiers are encouraged to promote the training and employment of U.S. veterans while performing under a USACE contract. While no set-aside, evaluation preference, or incentive applies to the solicitation or performance under the resultant contract, USACE contractors are encouraged to seek out highly qualified veterans to perform services under this contract. The following resources are available to assist USACE contractors in their outreach efforts:

- U.S. Department of Labor Veterans’ Employment and Training Service (VETS):
https://www.dol.gov/vets/
- Federal Veteran Employment Information: https://www.fedshirevets.gov/
- Veterans Opportunity to Work (VOW) Program:
https://www.benefits.va.gov/vow/
- U.S. Army Warrior Transition Command Employment Index:
https://wct.army.mil/modules/employers/index.html
- Hiring Our Heroes: https://www.uschamberfoundation.org/hiring-our-heroes

1.5 CONTRACTOR PERFORMANCE EVALUATIONS

See Federal Acquisition Regulation (FAR) Subpart 42.1502(e) for the requirements on past performance evaluations for construction contracts.For construction contracts valued at or above $750,000.00, including all modifications, the USACE will evaluate Contractor's performance using the web-based Contractors Performance Assessment

Reporting System (CPARS). After the USACE drafts an evaluation (interim or final), the Contractor will have the opportunity to access, review, comment and either concur or non-concur with the evaluation in the CPARS system for a period of 60 days. Access to the CPARS system requires either specific software called PKI certification (recommended method) or a username and password. The PKI certification is a Department of Defense recommendation and to provide security in electronic transactions. The certification software could cost approximately $110 - $125 per certificate per year and may be purchased from an External Certificate Authorities (ECA) vendor. Current information about the PKI certification process and contacting vendors can be found on the web site: https://www.cpars.gov.

1.6 ANTITERRORISM (AT)/OPERATIONS SECURITY (OPSEC) PROVISIONS

1. General security requirements and guidance:
The security requirements described below apply to all contract personnel (including employees of the prime Contractor ("Contractor") and all subcontractor employees) supporting the performance requirements of this contract. The Contractor is responsible for compliance with these security requirements. Questions regarding security matters shall be addressed to the designated Government representative (e.g., Contracting Officer Representative (COR), Requiring Activity (RA) representative, or Contracting Officer (if a COR or other RA representative is not appointed)). Contract personnel are critical to the overall security and safety of US Army Corps of Engineers (USACE) installations, facilities and activities, and security awareness training contributes to those efforts. The Department of Defense (DoD) and Army security training requirements specified below, if applicable, are performance requirements; all applicable contract personnel shall complete initial training within 30 days of contract award or the date new contract personnel begin performance on the contract. Within five business days from the completion of training, the Contractor shall provide written documentation (e.g., email or memorandum) to the Government representative. The documentation shall include the names of contract personnel trained and which training they completed; the Contractor shall maintain training records as part of their contract files and be prepared to provide copies of training certificates to the Government representative. Contractor personnel and vehicles are subject to search when entering federal installations. Additionally, all contract personnel shall comply with Force Protection Condition (FPCON) measures, Random Antiterrorism Measures (commonly referred to as "RAMs"), and Health Protection Condition (HPCON) measures. The Contractor is responsible for meeting performance requirements during elevated FPCON and/or HPCON levels in accordance with applicable RA plans and procedures-this includes identifying mission essential and non-mission essential personnel. In addition to the changes otherwise authorized by the changes clause of this contract, should the FPCON or HPCON levels at any individual facility or installation change, the Government may implement security changes that affect contract personnel. The Contractor shall ensure all contract personnel are aware of their security responsibilities, including any site-specific requirements identified in local policies or procedures.

2. Not Used

3. Physical security and access control requirements:
All contract personnel requiring physical access to a federal installation or facility shall comply with the access control procedures of that location. Contract personnel requiring unescorted access to meet contract

performance requirements on a DoD installation in the US shall be vetted by the installation/facility Provost Marshal/Directorate of Emergency Services/Security Office using the National Crime Information Center-Interstate Identification Index (commonly referred to as "NCIC-III") and Terrorist Screening Database (commonly referred to as "TSDB"). Contract personnel shall comply with all personal identity verification requirements specified in installation/facility policies and procedures. Contract personnel who do not meet requirements for unescorted access to USACE facilities shall coordinate escorted access with the Government representative, as needed. Contract personnel who receive keys, access cards, or lock combinations that provide access to government-owned property shall comply with key and lock control procedures of the RA.

4. Not Used

5. Not Used

6. Suspicious Activity Reporting training (e.g. iWATCH, CorpsWatch, or See Something, Say Something):
All contract personnel shall receive initial and annual refresher training from the RA representative on the local suspicious activity reporting program. This locally developed training provides contract personnel with general information on suspicious behavior, and guidance on reporting suspicious activity to the project manager, security representative or law enforcement entity.
This training shall be completed within 10 days prior to mobilization and within 30 calendar days of new employees commencing performance with the results reported to the COR. (submittal: iWATCH and/or CorpsWatch Training Sign In Sheets).

7. Not Used

8. Not Used

9. Not Used

10. Not Used

11. Not Used

12. Not Used

13. Escorting in classified and/or sensitive areas: In accordance with applicable regulations, all contract personnel who do not possess the appropriate security clearance or access privileges will be escorted in areas where they may be exposed to classified information or operations, sensitive information or activities, or restricted areas. There is no classified information or operations associated with this contract.

14. Pre-screen candidates using E-Verify Program: Contractors shall comply with the requirements set forth in FAR clause 52.222-54 Employment Eligibility Verification and FAR Subpart 22.18 in using the E-Verify Program at (https://www.e-verify.gov/) (website subject to change) to meet the contract employment eligibility requirements. Contractors are encouraged to cooperate with Federal and State agencies responsible for enforcing labor requirements to include eligibility for employment under United States immigration laws in accordance with FAR 22.102-1(i). An initial list of verified/eligible candidates shall be provided to the COR no later than three business days after the initial contract award. When

contracts are with individuals, the individuals will be required to complete a Form I-9, Employment Eligibility Verification, and submit it to the Contracting Officer to become part of the official contract file.

15. Not Used

16. Not Used

1.7 CONTRACT DRAWINGS AND SPECIFICATIONS

1.7.1 SETS FURNISHED

Utilize the bid drawings and specifications as amended in the performance of the work until the electronic Adobe Acrobat.pdf conformed specifications and contract drawings (i.e., bid drawings that have been posted with all amendment changes) are sent electronically to the Contractor. The work must conform to the contract drawings, set out in the drawing index, all of which form a part of these specifications. The work must also conform to any of the standard details bound or referenced herein. The Contractor shall be responsible for making copies of all plans and specifications as needed for the duration of the contract.

1.7.2 DISTRIBUTION

The Government will provide the Contractor with Adobe Acrobat.pdf contract drawings and conformed specification sets .

1.7.3 NOTIFICATION OF DISCREPANCIES

Check all drawing files furnished by the Government immediately upon their receipt and promptly notify the Contracting Officer of any discrepancies. Follow dimensions marked on drawings in lieu of scale measurements. Enlarged plans and details govern where the same work is shown at smaller scales. All scales shown are based on a standard drawing size of 22" x 34". If any other size drawings are furnished or plotted adjust the scales accordingly. Advise sub-contractors of the above. Compare all drawings and verify the figures before laying out the work and take responsibility for any errors which might have been avoided thereby.

1.7.4 OMISSIONS

Omissions from the drawings or specifications or the misdescription of details of work which are manifestly necessary to carry out the intent of the drawings and specifications, or which are customarily performed, does not relieve the Contractor from performing such omitted or misdescribed details of the work. Perform as if fully and correctly set forth and described in the drawings and specifications.

1.8 SUBMITTALS

Government approval is required for submittals with a "G" designation; submittals not having a "G" designation are for information only. When used, a designation following the "G" designation identifies the office that will review the submittal for the Government. Submit items below in accordance with Section 01 33 00 SUBMITTAL PROCEDURES:

SD-01 Preconstruction Submittals

iWATCH and/or CorpsWatch Training Sign In Sheets;

Sign In Sheets for all employee training required for iWATCH and/or CorpsWatch Training, see OPSEC paragraphs, subparagraph 6

E-Verify;

Provide E-Verify completion sheets required for OPSEC, see OPSEC paragraphs, subparagraph 14

Contractor Computer Cybersecurity Compliance Statements; G, RO

1.9 PAYMENT

1.9.1 PROMPT PAYMENT ACT

Pay requests authorized in GENERAL CONDITIONS (CONTRACT CLAUSES) clause: "Payments Under Fixed-Price Construction Contracts", will be paid pursuant to the clause, "Prompt Payment for Construction Contracts". Submit pay requests on ENG Form 93 and 93a, "Payment Estimate-Contract Performance" and "Continuation". All information and substantiation required by the identified contract clauses must be submitted with the ENG Form 93, and the required certification included on the last page of the ENG Form 93a, signed by an authorized contractor official and dated when signed. The designated billing office is the Office of the Area Engineer.

1.9.2 PAYMENT FOR MATERIALS STORED OFFSITE

a. As allowed under (FAR) 52.232-5 "Payments Under Fixed Price Construction Contracts", the Administrative Contracting Officer, at their discretion, may authorize progress payments for any material stored off-site provided:

(1) The Contractor furnishes satisfactory evidence that it has acquired title to such material and that the material will be used to perform this contract,

(2) Material is stored in such a manner to protect it from damage, fire, theft, etc.

(3) The Contractor provides evidence of insurance for material, and,

(4) Material is clearly identified and delineated by contract number for use on the applicable project.

b. The Administrative Contracting Officer reserves the right to inspect any off-site material prior to authorizing progress payments. Provide paid invoices listing the value of material and labor incorporated in the items.

1.10 AVAILABILITY AND USE OF UTILITY SERVICES

a. The Government will make available, from existing outlets and supplies, all reasonably required amounts of water and electricity required in the performance of the work without charge to the Contractor.

b. Carefully conserve utilities furnished without charge. Limit use of utilities to what is needed to perform work. The Government will not allow the charging of electric vehicles owned or operated by the

Contractor or subcontractors at Government charging stations. Install and maintain all necessary temporary connections and distribution lines in a workmanlike manner satisfactory to the Contracting Officer, pay all associated costs, and remove the same prior to final acceptance of the construction.

1.11 TIME EXTENSIONS FOR UNUSUALLY SEVERE WEATHER

a. This provision specifies the procedure for the determination of time extensions for unusually severe weather in accordance with FAR 52.249-10 "Default: (Fixed-Price Construction)." In order for the Contracting Officer to award a time extension under this clause, the following conditions must be satisfied:

(1) The weather experienced at the project site during the contract period must be found to be unusually severe, that is, more severe than the adverse weather anticipated for the project location during any given month.

(2) The unusually severe weather must actually cause a delay to the completion of the project. The delay must be beyond the control and without the fault or negligence of the contractor.

b. The following schedule of monthly anticipated adverse weather delays is based on National Oceanic and Atmospheric Administration (NOAA) or similar data for the project location and will constitute the base line for monthly weather time evaluations. The Contractor's progress schedule must reflect these anticipated adverse weather delays in all weather dependent activities.

MONTHLY ANTICIPATED ADVERSE WEATHER DELAY
WORK DAYS BASED ON (5) DAY WORK WEEK

Jan	23
Feb	17
Mar	13
Apr	4
May	3
Jun	6
Jul	3
Aug	4
Sep	4
Oct	3
Nov	12
Dec	20

c. Upon acknowledgment of the Notice to Proceed (NTP) and continuing throughout the contract, the contractor will record on the RMS daily CQC report, any occurrence of adverse weather and resultant impact to normally scheduled work, within 24 hours of the event. Actual adverse weather delay days must prevent work on critical activities for 50 percent or more of the contractor's scheduled work day. Describe in the RMS daily CQC reports the critical path item that is being affected and provide the critical path activity number(s) from the current schedule. The COR must acknowledge and accept the agreed upon occurrence of each adverse weather delay in RMS for the delays to be considered as adverse weather delays.

At the end of each month, identify the number of actual adverse weather delay days that includes days impacted by actual adverse weather (even if

adverse weather occurred in previous month), calculated chronologically from the first to the last day of each month, and recorded as full days. If the number of actual adverse weather delay days exceeds the number of days anticipated in paragraph b. above, the Contracting Officer will convert any qualifying delays to calendar days, giving full consideration for equivalent fair weather work days, and issue a modification in accordance with the GENERAL CONDITIONS (CONTRACT CLAUSES) clause entitled "Default (Fixed Price Construction)". (ER 415-1-15)

1.12 INSURANCE REQUIRED

In accordance with GENERAL CONDITIONS (CONTRACT CLAUSES) clause: "Insurance Work on a Government Installation," procure the following minimum insurance:

Type	Amount
Workmen's Compensation and Employer's Liability Insurance	$100,000
General Liability Insurance	$500,000 per occurrence
Automobile Liability Insurance	
Bodily injury	$200,000 per person and $500,000 per occurrence
Property damage	$ 20,000 per occurrence

(Coverages per FAR 28.307-2)

1.13 SUPERVISION

1.13.1 Superintendent Qualifications

Provide project superintendent with a minimum of 10 years experience in construction with at least 5 of those years as a superintendent on projects similar in size and complexity. The individual must be familiar with the requirements of EM 385-1-1 and have experience in the areas of hazard identification and safety compliance. The individual must be capable of interpreting a critical path schedule and construction drawings. The qualification requirements for the alternate superintendent are the same as for the project superintendent. The Contracting Officer may request proof of the superintendent's qualifications at any point in the project if the performance of the superintendent is in question.

For projects where the superintendent is permitted to also serve as the Quality Control (QC) Manager as established in Section 01 45 00 QUALITY CONTROL, the superintendent must have qualifications in accordance with that section.

1.13.2 Minimum Communication Requirements

Have at least one qualified superintendent, or competent alternate, capable of reading, writing, and conversing fluently in the English language, on the job-site at all times during the performance of Contract work. In addition, if a Quality Control (QC) representative is required on the Contract, then that individual must also have fluent English communication skills.

1.13.3 Duties

The project superintendent is primarily responsible for managing subcontractors and coordinating day-to-day production and schedule adherence on the project. The superintendent is required to attend Red Zone meetings, partnering meetings, and quality control meetings. The superintendent or qualified alternative must be on-site at all times during the performance of this contract until the work is completed and accepted.

1.13.4 Non-Compliance Actions

The Project Superintendent is subject to removal by the Contracting Officer for non-compliance with requirements specified in the contract and for failure to manage the project to ensure timely completion. Furthermore, the Contracting Officer may issue an order stopping all or part of the work until satisfactory corrective action has been taken. No part of the time lost due to such stop orders is acceptable as the subject of claim for extension of time or excess costs or damages by the Contractor.

1.14 PRECONSTRUCTION CONFERENCE

Immediately after award, prior to commencing any work at the site, coordinate with the Contracting Officer a time and place to meet for the Preconstruction Conference. The conference must take place within 35 calendar days after award of the contract, but prior to commencement of any work at the site. The purpose of this conference is to discuss and develop a mutual understanding of the administrative requirements of the Contract including but not limited to: daily reporting, invoicing, value engineering, safety, base-access, outage requests, hot work permits, schedule requirements, quality control, schedule of prices or earned value report, shop drawings, submittals, cybersecurity, prosecution of the work, government acceptance, final inspections and contract close-out. Contractor must present and discuss their basic approach to scheduling the construction work and any required phasing.

1.14.1 Attendees

Contractor attendees must include the Project Manager, Superintendent, Site Safety and Health Officer (SSHO), Quality Control Manager and major subcontractors.

1.15 CONTRACTOR QUALITY CONTROL (CQC)

See Section 01 45 00 QUALITY CONTROL.

1.16 NONDOMESTIC CONSTRUCTION MATERIALS

The list of excepted nondomestic construction materials or their components referenced in the Buy American Construction Material Contract Clauses includes the list set forth in paragraph 25.104 of the Federal Acquisition Regulation.

1.17 DAILY WORK SCHEDULES AND WEEKLY COORDINATION MEETINGS

In order to closely coordinate work under this contract, prepare a written agenda/meeting minutes and attend a weekly coordination meeting with the Contracting Officer and Using Service. Submit written agenda/meeting

minutes and proposed daily work schedule for the next two week period for coordination and approval. Provide a copy of modifications (MODs), Serial Letters, Requests for Information (RFIs) and any other information that is needed in the minutes of the meeting. Include required temporary utility services, time and duration of interruptions, and protection of adjoining areas with the Contractor's proposed 2-week work schedule. At this meeting, also submit a schedule of proposed dates and times of all preparatory inspections to be performed during the next two weeks. Develop all schedules in accordance with paragraph: PROGRESS CHARTS. Accomplish coordination action by the Contracting Officer relative to these schedules during these weekly meetings. Complete and give daily reports to the Contracting Officer or Representative within 24 hours of work. Provide all official correspondence such as serial letters and RFIs, with attachments in one hardcopy original with original signatures and one electronic (Adobe pdf format) copy by email. The Government will consider the correspondence to be received when the official hardcopy or electronic copy is received by the designated office.

1.18 PARTNERING

To most effectively accomplish this Contract, the Contractor and Government must form a cohesive partnership with the common goal of drawing on the strength of each organization in an effort to achieve a successful project without safety mishaps, conforming to the Contract, within budget and on schedule. The partnering team must consist of personnel from both the Government and Contractor including project level and corporate level leadership positions. Key Personnel from the supported command, end user, Contractor, key subcontractors and the Designer of Record (DOR) (regardless of whether the contract is a design-build or a design-bid-build) are required to participate in the Partnering process.

1.18.1 Team-Led (Informal) Partnering

a. The Contracting Officer will coordinate the initial Team-Led (Informal) Partnering Session with key personnel of the project team, including Contractor and Government personnel. The Partnering Session will be co-led by the Government Construction Manager and Contractor's Project Manager.

b. The Initial Team-led Partnering session may be held concurrently with the Pre-Construction meeting. Partnering sessions will be held at a location mutually agreed to by the Contracting Officer and the Contractor, typically at a conference room on-base or at the Contractor's temporary trailer.

c. The Initial Team-Led Partnering Session will be conducted and facilitated using electronic media (a video and accompanying forms) provided by Contracting Officer.

d. The Partners will determine the frequency of the follow-on sessions.

e. Participants will bear their own costs for meals, lodging and transportation associated with Partnering.

1.19 PROFIT

a. Use the weighted guidelines method of determining profit on any equitable adjustment change order or modification issued under this

contract. The profit factors are as follows:

Factor	Rate	Weight	Value
Degree of Risk	20	See Item	
Relative difficulty of work	15	b. below	
Size of Job	15		
Period of performance	15		
Contractor's investment	5		
Assistance by Government	5		
Subcontracting	25		
	100		

b. Based on the circumstances of each procurement action, weight each of the above factors from .03 to .12 as indicated below. Obtain the value by multiplying the rate by the weight. The value column when totaled indicates the fair and reasonable profit percentage under the circumstances of the particular procurement.

(1) Degree of Risk. Where the work involves no risk or the degree of risk is very small, the weighting should be .03; as the degree of risk increases, the weighting should be increased up to a maximum of .12. Lump sum items will have, generally, a higher weighted value than the unit price items for which quantities are provided. Other things to consider: the portion of the work to be done by subcontractors, nature of work, where work is to be performed, reasonableness of negotiated costs, amount of labor included in costs, and whether the negotiation is before or after performance of work.

(2) Relative Difficulty of Work. If the work is most difficult and complex, the weighting should be .12 and should be proportionately reduced to .03 on the simplest of jobs. This factor is tied in to some extent with the degree of risk. Some things to consider: the nature of the work, by whom it is to be done, where, and what is the time schedule.

(3) Size of Job. All work not in excess of $100,000 shall be weighted at .12. Work estimated between $100,000 and $5,000,000 shall be proportionately weighted from .12 to .05.

(4) Periods of Performance. Jobs in excess of 24 months are to be weighted at .12. Jobs of lesser duration are to be proportionately weighted to a minimum of .03 for jobs not to exceed 30 days. No weight where additional time not required.

(5) Contractor's Investment. To be weighted from .03 to .12 on the basis of below average, average, and above average. Things to consider: amount of subcontracting, mobilization payment item, Government furnished property, equipment and facilities, and expediting assistance.

(6) Assistance by Government. To be weighted from .12 to .03 on the basis of average to above average. Things to consider: use of Government-owned property, equipment and facilities, and expediting assistance.

(7) Subcontracting. To be weighted inversely proportional to the amount of subcontracting. Where 80 percent or more of the work is to be subcontracted, the weighting is to be .03 and such weighting proportionately increased to .12 where all the work is performed by the Contractor's own forces.

1.20 LABOR CONDITIONS APPLICABLE TO TEMPORARY FACILITIES

It is the position of the Department of Defense that the Davis-Bacon Act, 40 U.S.C. 276a is applicable to temporary facilities such as job headquarters, tool yards, batch plants, borrow pits, sandpits, rock quarries, and similar operations, provided they are dedicated exclusively, or nearly so, to performance of the contract or project, and provided they are adjacent or virtually adjacent to the site of the work and are established after receipt of the proposal or bid. Clause "Payrolls and Basic Records" of the GENERAL CONDITIONS (CONTRACT CLAUSES) is applicable to such operations.

1.21 DRAWING SCALES

All scales shown are based on a standard drawing size of 22" x 34". If any other size drawings are furnished or plotted, adjust the scales accordingly. Advise sub-contractors of the above.

1.22 CYBERSECURITY DURING CONSTRUCTION

{For Reference Only: This subpart (and its subparts) relates to AC-18, SA-3, CCI-00258.} Meet the following requirements throughout the construction process.

1.22.1 Contractor Computer Equipment

Contractor owned computers may be used for construction. When used, contractor computers must meet the following requirements:

1.22.1.1 Operating System

The operating system must be an operating system currently supported by the manufacturer of the operating system. The operating system must be current on security patches and operating system manufacturer required updates.

1.22.1.2 Anti-Malware Software

The computer must run anti-malware software from a reputable software manufacturer. Anti-malware software must be a version currently supported by the software manufacturer, must be current on all patches and updates, and must use the latest definitions file. All computers used on this project must be scanned using the installed software at least once per day.

1.22.1.3 Passwords and Passphrases

The passwords and passphrases for all computers must be changed from their default values. Passwords must be a minimum of eight characters with a minimum of one uppercase letter, one lowercase letter, one number and one special character.

1.22.1.4 Contractor Computer Cybersecurity Compliance Statements

Provide a single submittal containing completed Contractor Computer Cybersecurity Compliance Statements for each company using contractor owned computers. Contractor Computer Cybersecurity Compliance Statements must use the template published at http://www.wbdg.org/ffc/dod/unified-facilities-guide-specifications-ufgs/forms-graphics-tables. Each

Statement must be signed by a cybersecurity representative for the relevant company.

PART 2 NOT USED

PART 3 NOT USED

-- End of Section --

This page was intentionally left blank for duplex printing.

SECTION TABLE OF CONTENTS

DIVISION 01 - GENERAL REQUIREMENTS

SECTION 01 33 00

SUBMITTAL PROCEDURES

PART 1 GENERAL

1.1 SUMMARY
1.1.1 Submittal Information
1.1.2 Project Type
1.1.3 Submission of Submittals
1.2 DEFINITIONS
1.2.1 Submittal Descriptions (SD)
1.2.2 Approving Authority
1.2.3 Work
1.3 SUBMITTALS
1.3.1 Action Codes
1.3.1.1 Contractor Action Codes
1.3.1.2 Government Reviewer Designations
1.4 SUBMITTAL CLASSIFICATION
1.4.1 Government Approved (G)
1.4.2 For Information Only
1.5 PREPARATION
1.5.1 Transmittal Form
1.5.2 Submittal Format
1.5.2.1 Format of SD-01 Preconstruction Submittals
1.5.2.2 Format for SD-02 Shop Drawings
1.5.2.2.1 Drawing Identification
1.5.2.3 Format of SD-03 Product Data
1.5.2.3.1 Product Information
1.5.2.3.2 Standards
1.5.2.3.3 Data Submission
1.5.2.4 Format of SD-04 Samples
1.5.2.4.1 Sample Characteristics
1.5.2.4.2 Sample Incorporation
1.5.2.4.3 Comparison Sample
1.5.2.5 Format of SD-05 Design Data
1.5.2.6 Format of SD-06 Test Reports
1.5.2.7 Format of SD-07 Certificates
1.5.2.8 Format of SD-08 Manufacturer's Instructions
1.5.2.8.1 Standards
1.5.2.9 Format of SD-09 Manufacturer's Field Reports
1.5.2.10 Format of SD-10 Operation and Maintenance Data (O&M)
1.5.2.11 Format of SD-11 Closeout Submittals
1.5.3 Source Drawings for Shop Drawings
1.5.3.1 Source Drawings
1.5.3.2 Terms and Conditions
1.5.4 Electronic File Format
1.6 QUANTITY OF SUBMITTALS
1.6.1 Number of SD-04 Samples
1.7 INFORMATION ONLY SUBMITTALS

1.8 PROJECT SUBMITTAL REGISTER
1.8.1 Submittal Management
1.8.2 Preconstruction Use of Submittal Register
1.8.3 Contractor Use of Submittal Register
1.8.4 Approving Authority Use of Submittal Register
1.8.5 Action Codes
1.8.6 Delivery of Copies
1.9 VARIATIONS
1.9.1 Considering Variations
1.9.2 Proposing Variations
1.9.3 Warranting that Variations are Compatible
1.9.4 Review Schedule Extension
1.10 SCHEDULING
1.11 GOVERNMENT APPROVING AUTHORITY
1.11.1 Review Notations
1.12 DISAPPROVED SUBMITTALS
1.13 APPROVED SUBMITTALS
1.14 APPROVED SAMPLES
1.15 WITHHOLDING OF PAYMENT
1.16 CERTIFICATION OF SUBMITTAL DATA

PART 2 PRODUCTS

PART 3 EXECUTION

ATTACHMENTS:

ENG Form 4025

Project Submittal Register

-- End of Section Table of Contents --

SECTION 01 33 00

SUBMITTAL PROCEDURES

PART 1 GENERAL

1.1 SUMMARY

1.1.1 Submittal Information

The Contractor is responsible for total management of their work including, but not limited to, approval, scheduling, control, certification of all submittals and compliance with all applicable Buy-American and Trade Agreement clauses. The submittal management system provided in these specifications is intended to be a complete system for the Contractor to use to control the quality of materials, equipment and workmanship provided by manufacturers, fabricators, suppliers and subcontractors. Review each submittal for contract compliance. **Compliance with all applicable Buy American and Trade Agreement Clauses is to be included in this review. The Contractor must provide the country of origin on ENG Form 4025 for each item submitted.** The Submittal Register (ENG Form 4288) will be utilized to log and monitor all submittal activities.

The Contracting Officer may request submittals, in addition to those specified, when deemed necessary to adequately describe the work covered in the respective sections. Each submittal is to be complete and in sufficient detail to allow ready determination of compliance with contract requirements.

Units of weights and measures used on all submittals are to be the same as those used in the contract drawings.

1.1.2 Project Type

The Contractor's Quality Control (CQC) System Manager is to check and approve all items before submittal and stamp, sign, and date indicating action taken. Clearly identify proposed deviations from the contract requirements. Include within submittals items such as: Contractor's, manufacturer's, or fabricator's drawings; descriptive literature including (but not limited to) catalog cuts, diagrams, operating charts or curves; test reports; test cylinders; samples; O&M manuals (including parts list); certifications; warranties; and other such required items.

1.1.3 Submission of Submittals

Schedule and provide submittals requiring Government approval, after notice to proceed (NTP). Provide ample lead time to ensure the submittal's processing by the Government and any lead time needed by the manufacturer upon ordering after approval. Dispose of samples not incorporated into the work in accordance with manufacturer's Safety Data Sheets (SDS) and in compliance with existing laws and regulations.

1.2 DEFINITIONS

1.2.1 Submittal Descriptions (SD)

Submittal requirements are specified in the technical sections. Examples and descriptions of submittals identified by the Submittal Description (SD) numbers and titles follow:

SD-01 Preconstruction Submittals

Submittals that are required prior to or at the start of construction (work) or the next major phase of the construction on a multiphase contract.

Preconstruction Submittals include schedules and a tabular list of locations, features, and other pertinent information regarding products, materials, equipment, or components to be used in the work.

The Government reserves the right to handle pre-construction submittals (listed below) as administrative submittals via a Serial Letter, as directed by the Project, Area or Resident Office. When directed by the Project, Area or Resident Office (as directed), submit administrative submittals for acceptance by the Government. Format for the Serial Letter will be as directed by the Project, Area or Resident Office.

Certificates Of Insurance

Surety Bonds

List Of Proposed Subcontractors

List Of Proposed Products

Baseline Network Analysis Schedule (NAS)

Submittal Register

Schedule Of Prices Or Earned Value Report

Accident Prevention Plan

Work Plan

Quality Control (QC) plan

Permits

Environmental Protection Plan

SD-02 Shop Drawings

Drawings, diagrams and schedules specifically prepared to illustrate some portion of the work.

Diagrams and instructions from a manufacturer or fabricator for use in producing the product and as aids to the Contractor for integrating the product or system into the project.

Drawings prepared by or for the Contractor to show how multiple systems and interdisciplinary work will be coordinated.

SD-03 Product Data

Catalog cuts, illustrations, schedules, diagrams, performance charts, instructions and brochures illustrating size, physical appearance and other characteristics of materials, systems or equipment for some portion of the work.

Samples of warranty language when the contract requires extended product warranties.

SD-04 Samples

Fabricated or unfabricated physical examples of materials, equipment or workmanship that illustrate functional and aesthetic characteristics of a material or product and establish standards by which the work can be judged.

Color samples from the manufacturer's standard line (or custom color samples if specified) to be used in selecting or approving colors for the project.

Field samples and mock-ups constructed on the project site establish standards ensuring work can be judged. Includes assemblies or portions of assemblies that are to be incorporated into the project and those that will be removed at conclusion of the work.

SD-06 Test Reports

Report signed by authorized official of testing laboratory that a material, product or system identical to the material, product or system to be provided has been tested in accord with specified requirements. Unless specified in another section, testing must have been within three years of date of contract award for the project.

Report that includes findings of a test required to be performed on an actual portion of the work or prototype prepared for the project before shipment to job site.

Report that includes finding of a test made at the job site or on sample taken from the job site, on portion of work during or after installation.

Investigation reports

Daily logs and checklists

Final acceptance test and operational test procedure

SD-07 Certificates

Statements printed on the manufacturer's letterhead and signed by responsible officials of manufacturer of product, system or material attesting that the product, system, or material meets specification requirements. Must be dated after award of project contract and clearly name the project.

Document required of Contractor, or of a manufacturer, supplier, installer or Subcontractor through Contractor. The document purpose is to further promote the orderly progression of a portion of the work by documenting procedures, acceptability of methods, or personnel qualifications.

Confined space entry permits

Text of posted operating instructions

SD-08 Manufacturer's Instructions

Preprinted material describing installation of a product, system or material, including special notices and (SDS)concerning impedances, hazards and safety precautions.

SD-09 Manufacturer's Field Reports

Documentation of the testing and verification actions taken by manufacturer's representative at the job site, in the vicinity of the job site, or on a sample taken from the job site, on a portion of the work, during or after installation, to confirm compliance with manufacturer's standards or instructions. The documentation must be signed by an authorized official of a testing laboratory or agency and state the test results; and indicate whether the material, product, or system has passed or failed the test.

Factory test reports.

SD-10 Operation and Maintenance Data

Data provided by the manufacturer, or the system provider, including manufacturer's help and product line documentation, necessary to maintain and install equipment, for operating and maintenance use by facility personnel.

Data required by operating and maintenance personnel for the safe and efficient operation, maintenance and repair of the item.

Data incorporated in an operations and maintenance manual or control system.

SD-11 Closeout Submittals

Documentation to record compliance with technical or administrative requirements or to establish an administrative mechanism.

Submittals required for Guiding Principle Validation (GPV) or Third Party Certification (TPC).

Special requirements necessary to properly close out a construction contract. For example, Record Drawings and as-built drawings. Also, submittal requirements necessary to properly close out a major phase of construction on a multi-phase contract.

1.2.2 Approving Authority

Office or designated person authorized to approve the submittal.

1.2.3 Work

As used in this section, on-site and off-site construction required by contract documents, including labor necessary to produce submittals, construction, materials, products, equipment, and systems incorporated or to be incorporated in such construction. In exception, excludes work to produce SD-01 submittals.

1.3 SUBMITTALS

Government approval is required for submittals with a "G" designation; submittals not having any designation are for information only. When used, a designation following the "G" designation identifies the office that will review the submittal for the Government. Submit the following in accordance with this section. When directed by the Government, the submittal register may be submitted via Section of 01 45 00.15 10 RESIDENTIAL MANAGMENT SYSTEM CONTRACTOR MODE (RMS-CM) in lieu of the copy attached to this section. SpecsIntact is the software system used by Government to generate the Submittal Register that is loaded into RMS-CM.

SD-01 Preconstruction Submittals

Submittal Register; G-AO

1.3.1 Action Codes

1.3.1.1 Contractor Action Codes

DESIGN BID BUILD SUBMITTALS			
Submittal Classifications shown in UFGS Sections	Submittal Classification	Corresponding SpecsIntact Submittal Register Code which is populated in the SI Submittal Register. Software Limitations: (The software shows one character delineation in the SpecsIntact Submittal Register)	RMS – The following Submittal Classifications are populated in RMS when the SpecsIntact Submittal Data File is pulled into RMS)
G	Submittal requires Government Approval	G	GA
BLANK	Submittal is For Information Only (FIO)	BLANK	FIO

1.3.1.2 Government Reviewer Designations

Following the Submittal Classification designation "G", the following

reviewer designations may be included:

RO - Resident Office
AO - Area Office
DO - District Office

Additional information will be provided at the pre-design and/or pre-construction conference.

Corps of Engineers, Omaha District Office for "DO" reviewer designations, submittals will be coordinated through RMS.

1.4 SUBMITTAL CLASSIFICATION

1.4.1 Government Approved (G)

Government approval is required for extensions of design, critical materials, variations, equipment whose compatibility with the entire system must be checked, and other items as designated by the Government.

Within the terms of the Contract Clause SPECIFICATIONS AND DRAWINGS FOR CONSTRUCTION, submittals are considered to be "shop drawings."

1.4.2 For Information Only

Submittals not requiring Government approval will be for information only. Within the terms of the Contract Clause SPECIFICATIONS AND DRAWINGS FOR CONSTRUCTION, they are not considered to be "shop drawings."

1.5 PREPARATION

1.5.1 Transmittal Form

Use the ENG Form 4025 transmittal form for submitting both Government-approved and information-only submittals. Submit in accordance with the instructions on the reverse side of the form. These forms are included in the RMS CM software that the Contractor is required to use for this contract. Properly complete this form by filling out all the heading blank spaces and identifying each item submitted. If there are multiple Item numbers listed on a particular ENG Form 4025 submittal, combine all submitted items for review into a single Adobe file with bookmarks (for ease of review). Exercise special care to ensure proper listing of the specification paragraph and sheet number of the contract drawings pertinent to the data submitted for each item.

1.5.2 Submittal Format

1.5.2.1 Format of SD-01 Preconstruction Submittals

When the submittal includes a document that is to be used in the project, or is to become part of the project record, other than as a submittal, do not apply the Contractor's approval stamp to the document itself, but to a separate sheet accompanying the document.

Provide data in the unit of measure used in the contract documents.

1.5.2.2 Format for SD-02 Shop Drawings

Provide shop drawings not less than 8 1/2 by 11 inches nor more than 30 by 42 inches, except for full-size patterns or templates. Prepare drawings to accurate size, with scale indicated, unless another form is required. Ensure drawings are suitable for reproduction and of a quality to produce clear, distinct lines and letters, with dark lines on a white background.

a. Include the nameplate data, size, and capacity on drawings. Also include applicable federal, military, industry, and technical society publication references.

b. Dimension drawings, except diagrams and schematic drawings. Prepare drawings demonstrating interface with other trades to scale. Use the same unit of measure for shop drawings as indicated on the contract drawings. Identify materials and products for work shown.

Submit an electronic copy of drawings in PDF format.

1.5.2.2.1 Drawing Identification

Include on each drawing the drawing title, number, date, and revision numbers and dates.

Number drawings in a logical sequence. Each drawing is to bear the number of the submittal in a uniform location next to the title block. Place the Government contract number in the margin, immediately below the title block, for each drawing.

1.5.2.3 Format of SD-03 Product Data

Present product data submittals for each section. Include a table of contents, listing the page and catalog item numbers for product data.

Indicate, by prominent notation, each product that is being submitted; indicate the specification section number and paragraph number to which it pertains.

1.5.2.3.1 Product Information

Supplement product data with material prepared for the project to satisfy the submittal requirements where product data does not exist. Identify this material as developed specifically for the project, with information and format as required for submission of SD-07 Certificates.

Provide product data in units used in the Contract documents. Where product data are included in preprinted catalogs with another unit, submit the dimensions in contract document units, on a separate sheet.

1.5.2.3.2 Standards

Where equipment or materials are specified to conform to industry or technical-society reference standards of such organizations as the American National Standards Institute (ANSI), ASTM International (ASTM), National Electrical Manufacturer's Association (NEMA), Underwriters Laboratories (UL), or Association of Edison Illuminating Companies (AEIC), submit proof of such compliance. The label or listing by the specified organization will be acceptable evidence of compliance. In lieu of the

label or listing, submit a certificate from an independent testing organization, competent to perform testing, and approved by the Contracting Officer. State on the certificate that the item has been tested in accordance with the specified organization's test methods and that the item complies with the specified organization's reference standard.

1.5.2.3.3 Data Submission

Collect required data submittals for each specific material, product, unit of work, or system into a single submittal that is marked for choices, options, and portions applicable to the submittal. Mark each copy of the product data identically. Partial submittals will not be accepted for expedition of the construction effort.

Submit the manufacturer's instructions before installation.

1.5.2.4 Format of SD-04 Samples

1.5.2.4.1 Sample Characteristics

Furnish samples in the following sizes, unless otherwise specified or unless the manufacturer has prepackaged samples of approximately the same size as specified:

a. Sample of Equipment or Device: Full size.

b. Sample of Materials Less Than 2 by 3 inches: Built up to 8 1/2 by 11 inches.

c. Sample of Materials Exceeding 8 1/2 by 11 inches: Cut down to 8 1/2 by 11 inches and adequate to indicate color, texture, and material variations.

d. Sample of Linear Devices or Materials: 10 inch length or length to be supplied, if less than 10 inches. Examples of linear devices or materials are conduit and handrails.

e. Sample Volume of Nonsolid Materials: Pint. Examples of nonsolid materials are sand and paint.

f. Color Selection Samples: 2 by 4 inches. Where samples are specified for selection of color, finish, pattern, or texture, submit the full set of available choices for the material or product specified. Sizes and quantities of samples are to represent their respective standard unit.

g. Sample Panel: 4 by 4 feet.

h. Sample Installation: 100 square feet.

1.5.2.4.2 Sample Incorporation

Reusable Samples: Incorporate returned samples into work only if so specified or indicated. Incorporated samples are to be in undamaged condition at the time of use.

Recording of Sample Installation: Note and preserve the notation of any area constituting a sample installation, but remove the notation at the

final clean-up of the project.

1.5.2.4.3 Comparison Sample

Samples Showing Range of Variation: Where variations in color, finish, pattern, or texture are unavoidable due to nature of the materials, submit sets of samples of not less than three units showing extremes and middle of range. Mark each unit to describe its relation to the range of the variation.

When color, texture, or pattern is specified by naming a particular manufacturer and style, include one sample of that manufacturer and style, for comparison.

1.5.2.5 Format of SD-05 Design Data

Provide design data and certificates on 8 1/2 by 11 inch page size.

1.5.2.6 Format of SD-06 Test Reports

By prominent notation, indicate each report in the submittal. Indicate the specification number and paragraph number to which each report pertains.

1.5.2.7 Format of SD-07 Certificates

Provide design data and certificates on 8 1/2 by 11 inch page size.

1.5.2.8 Format of SD-08 Manufacturer's Instructions

Present manufacturer's instructions submittals for each section. Include the manufacturer's name, trade name, place of manufacture, and catalog model or number on product data. Also include applicable federal, military, industry, and technical-society publication references. If supplemental information is needed to clarify the manufacturer's data, submit it as specified for SD-07 Certificates.

Submit the manufacturer's instructions before installation.

1.5.2.8.1 Standards

Where equipment or materials are specified to conform to industry or technical-society reference standards of such organizations as the American National Standards Institute (ANSI), ASTM International (ASTM), National Electrical Manufacturer's Association (NEMA), Underwriters Laboratories (UL), or Association of Edison Illuminating Companies (AEIC), submit proof of such compliance. The label or listing by the specified organization will be acceptable evidence of compliance. In lieu of the label or listing, submit a certificate from an independent testing organization, competent to perform testing, and approved by the Contracting Officer. State on the certificate that the item has been tested in accordance with the specified organization's test methods and that the item complies with the specified organization's reference standard.

1.5.2.9 Format of SD-09 Manufacturer's Field Reports

By prominent notation, indicate each report in the submittal. Indicate the specification number and paragraph number to which each report

pertains.

1.5.2.10 Format of SD-10 Operation and Maintenance Data (O&M)

Comply with the requirements specified in Section 01 78 23 OPERATION AND MAINTENANCE DATA for O&M Data format.

1.5.2.11 Format of SD-11 Closeout Submittals

When the submittal includes a document that is to be used in the project or is to become part of the project record, other than as a submittal, do not apply the Contractor's approval stamp to the document itself, but to a separate sheet accompanying the document.

Provide data in the unit of measure used in the contract documents.

1.5.3 Source Drawings for Shop Drawings

1.5.3.1 Source Drawings

The entire set of source drawing files (DWG or DGN) will not be provided to the Contractor. Request the specific Drawing Number for the preparation of shop drawings. Only those drawings requested to prepare shop drawings will be provided. These drawings are provided only after award.

1.5.3.2 Terms and Conditions

Data contained on these electronic files must not be used for any purpose other than as a convenience in the preparation of construction data for the referenced project. Any other use or reuse is at the sole risk of the Contractor and without liability or legal exposure to the Government. The Contractor must make no claim, and waives to the fullest extent permitted by law any claim or cause of action of any nature against the Government, its agents, or its subconsultants that may arise out of or in connection with the use of these electronic files. The Contractor must, to the fullest extent permitted by law, indemnify and hold the Government harmless against all damages, liabilities, or costs, including reasonable attorney's fees and defense costs, arising out of or resulting from the use of these electronic files.

These electronic source drawing files are not construction documents. Differences may exist between the source drawing files and the corresponding construction documents. The Government makes no representation regarding the accuracy or completeness of the electronic source drawing files, nor does it make representation to the compatibility of these files with the Contractor hardware or software. The Contractor is responsible for determining if any conflict exists. In the event that a conflict arises between the signed and sealed construction documents prepared by the Government and the furnished source drawing files, the signed and sealed construction documents govern. Use of these source drawing files does not relieve the Contractor of the duty to fully comply with the contract documents, including and without limitation the need to check, confirm and coordinate the work of all contractors for the project. If the Contractor uses, duplicates or modifies these electronic source drawing files for use in producing construction data related to this contract, remove all previous indication of ownership (seals, logos, signatures, initials and dates).

1.5.4 Electronic File Format

Provide submittals in electronic format, with the exception of material samples required for SD-04 Samples items. Compile the submittal file as a single, complete document, to include the Transmittal Form described within. Name the electronic submittal file specifically according to its contents, and coordinate the file naming convention with the Contracting Officer. Electronic files must be of sufficient quality that all information is legible. Use PDF as the electronic format, unless otherwise specified or directed by the Contracting Officer. All documents must make use of optical character recognition (OCR) routines to make text searchable and selectable, so that the text can be copied. Index and bookmark files exceeding 30 pages to allow efficient navigation of the file. When required, the electronic file must include a valid electronic signature.

E-mail electronic submittal documents smaller than 10MB to an e-mail address as directed by the Contracting Officer, unless directed otherwise by COR. Provide electronic documents over 10 MB on an optical disc or through an electronic file sharing system, such as secure ftp site or DoD SAFE located at the following website: https://safe.apps.mil/. Use of the Government web application must be initiated by the Government, unless Contractor has a Government CAC card. This Government web application restricts the number of days files are available to download.

1.6 QUANTITY OF SUBMITTALS

Submittals are to be transmitted electronically, unless directed otherwise.

1.6.1 Number of SD-04 Samples

a. Submit two samples, or two sets of samples showing the range of variation, of each required item. One approved sample or set of samples will be retained by the approving authority and one will be returned to the Contractor.

b. Submit one sample panel or provide one sample installation where directed. Include components listed in the technical section or as directed.

c. Submit one sample installation, where directed.

d. Submit one sample of nonsolid materials.

1.7 INFORMATION ONLY SUBMITTALS

Submittals without an action code must be certified by the QC manager and submitted to the Contracting Officer for information-only. Approval of the Contracting Officer is not required on information only submittals. The Contracting Officer will mark "receipt acknowledged" on submittals for information and will return only the transmittal cover sheet to the Contractor. Normally, submittals for information only will not be returned. However, the Government reserves the right to return unsatisfactory submittals and require the Contractor to resubmit any item found not to comply with the contract. This does not relieve the Contractor from the obligation to furnish material conforming to the plans and specifications; will not prevent the Contracting Officer from requiring removal and replacement of nonconforming material incorporated in the work; and does not relieve the Contractor of the requirement to

furnish samples for testing by the Government laboratory or for check testing by the Government in those instances where the technical specifications so prescribe.

1.8 PROJECT SUBMITTAL REGISTER

A sample Project Submittal Register showing submittals required by the specifications is attached to this section as "Project Submittal Register."

1.8.1 Submittal Management

Prepare and maintain a submittal register, as the work progresses. Do not change data that is output in columns (c), (d), (e), and (f) as delivered by Government; retain data that is output in columns (a), (g), (h), and (i) as approved. As an attachment, provide a submittal register showing items of equipment and materials for which submittals are required by the specifications. This list may not be all-inclusive and additional submittals may be required. Maintain a submittal register for the project in accordance with Section 01 45 00.15 10 RESIDENT MANAGEMENT SYSTEM CONTRACTOR MODE(RMS CM). The Government will provide the initial submittal register in electronic format with the following fields completed, to the extent that will be required by the Government during subsequent usage.

Column (c): Lists specification section in which submittal is required.

Column (d): Lists each submittal description (SD Number. and type, e.g., SD-02 Shop Drawings) required in each specification section.

Column (e): Lists one principal paragraph in each specification section where a material or product is specified. This listing is only to facilitate locating submitted requirements. Do not consider entries in column (e) as limiting the project requirements.

Thereafter, the Contractor is to track all submittals by maintaining a complete list, including completion of all data columns and all dates on which submittals are received by and returned by the Government.

1.8.2 Preconstruction Use of Submittal Register

Submit the submittal register as an electronic database, using the submittal management program furnished to Contractor, unless directed otherwise by COR. Include the QC plan and the project schedule. Verify that all submittals required for the project are listed and add missing submittals. Coordinate and complete the following fields on the register database submitted with the QC plan and the project schedule:

Column (a) Activity Number: Activity number from the project schedule.

Column (g) Contractor Submit Date: Scheduled date for the approving authority to receive submittals.

Column (h) Contractor Approval Date: Date that Contractor needs approval of submittal.

Column (i) Contractor Material: Date that Contractor needs material delivered to Contractor control.

1.8.3 Contractor Use of Submittal Register

Update the following fields in the Government-furnished submittal register program or equivalent fields in the program used by the Contractor with each submittal throughout the contract.

Column (b) Transmittal Number: List of consecutive, Contractor-assigned numbers.

Column (j) Action Code (k): Date of action used to record Contractor's review when forwarding submittals to QC.

Column (l) Date submittal transmitted.

Column (q) Date approval was received.

1.8.4 Approving Authority Use of Submittal Register

Update the following fields:

Column (b) Transmittal Number: List of consecutive, Contractor-assigned numbers.

Column (l) Date submittal was received.

Column (m) through (p) Dates of review actions.

Column (q) Date of return to Contractor.

1.8.5 Action Codes

See paragraph Action Codes above.

1.8.6 Delivery of Copies

Submit an updated electronic copy of the submittal register to the Contracting Officer with each invoice request, unless a paper copy is requested by the Contracting Officer. Provide an updated Submittal Register monthly regardless of whether an invoice is submitted.

1.9 VARIATIONS

Variations from contract requirements require Contracting Officer approval pursuant to contract Clause FAR 52.236-21 Specifications and Drawings for Construction, and will be considered where advantageous to the Government.

1.9.1 Considering Variations

Discussion of variations with the Contracting Officer before submission will help ensure that functional and quality requirements are met and minimize rejections and resubmittals. For variations that include design changes or some material or product substitutions, the Government may require an evaluation and analysis by a licensed professional engineer hired by the contractor. When contemplating a variation that results in lower cost, consider submission of the variation as a Value Engineering

Change Proposal (VECP).

Specifically point out variations from contract requirements in transmittal letters. Failure to point out variations may cause the Government to require rejection and removal of such work at no additional cost to the Government.

1.9.2 Proposing Variations

When proposing variations, deliver a written request to the Contracting Officer, with documentation of the nature and features of the variation and why the variation is desirable and beneficial to Government. If lower cost is a benefit, also include an estimate of the cost savings. In addition to documentation required for variation, include the submittals required for the item. Clearly mark the proposed variation in all documentation.

Check the column "variation" of ENG Form 4025 for submittals that include variations proposed by the Contractor. Set forth in writing the reason for any variations and note such variations on the submittal. The Government reserves the right to rescind inadvertent approval of submittals containing unnoted variations.

1.9.3 Warranting that Variations are Compatible

When delivering a variation for approval, the Contractor warrants that this contract has been reviewed to establish that the variation, if incorporated, will be compatible with other elements of work.

1.9.4 Review Schedule Extension

In addition to the normal submittal review period, a period of 14 calendar days will be allowed for the Government to consider submittals with variations.

1.10 SCHEDULING

Schedule and submit concurrently product data and shop drawings covering component items forming a system or items that are interrelated. Submit pertinent certifications at the same time. No delay damages or time extensions will be allowed for time lost in late submittals. .

a. Coordinate scheduling, sequencing, preparing, and processing of submittals with performance of work so that work will not be delayed by submittal processing. The Contractor is responsible for additional time required for Government reviews resulting from required resubmittals. The review period for each resubmittal is the same as for the initial submittal.

b. Submittals required by the contract documents are listed on the submittal register. If a submittal is listed in the submittal register but does not pertain to the contract work, the Contractor is to include the submittal in the register and annotate it "N/A" with a brief explanation. Approval by the Contracting Officer does not relieve the Contractor of supplying submittals required by the contract documents but that have been omitted from the register or marked "N/A."

c. Resubmit the submittal register and annotate it monthly with actual

submission and approval dates. When all items on the register have been fully approved, no further resubmittal is required.

Contracting Officer review will be completed within 20 calendar days after the date of submission.

The Government review period for each construction submittal does not begin until the submittal is delivered via RMS CM. Contract compliance for all submittals are the Contractor's responsibility. Government acceptance or receipt acknowledged does not remove this responsibility for contract compliance on any construction submittal.

1.11 GOVERNMENT APPROVING AUTHORITY

When the approving authority is the Contracting Officer, the Government will:

a. Note the date on which the submittal was received.

b. Review submittals for approval within the scheduling period specified and only for conformance with project design concepts and compliance with contract documents.

c. Identify returned submittals with one of the actions defined in paragraph REVIEW NOTATIONS and with comments and markings appropriate for the action indicated.

Upon completion of review of submittals requiring Government approval, stamp and date submittals. An electronic copy of the submittal will be retained by the Contracting Officer and an electronic copy of the submittal will be returned to the Contractor. The Government may process submittals in the RMS CM System.

1.11.1 Review Notations

Submittals will be returned to the Contractor with the following notations:

a. Submittals marked "approved" or "accepted" authorize proceeding with the work covered.

b. Submittals marked "approved as noted" or "approved, except as noted, resubmittal not required," authorize proceeding with the work covered provided that the Contractor takes no exception to the corrections.

c. Submittals marked "not approved," "disapproved," or "revise and resubmit" indicate incomplete submittal or noncompliance with the contract requirements or design concept. Resubmit with appropriate changes. Do not proceed with work for this item until the resubmittal is approved.

d. Submittals marked "not reviewed" indicate that the submittal has been previously reviewed and approved, is not required, does not have evidence of being reviewed and approved by Contractor, or is not complete. A submittal marked "not reviewed" will be returned with an explanation of the reason it is not reviewed. Resubmit submittals returned for lack of review by Contractor or for being incomplete, with appropriate action, coordination, or change.

e. Submittals marked "receipt acknowledged" indicate that submittals have

been received by the Government. This applies only to "information-only submittals" as previously defined.

1.12 DISAPPROVED SUBMITTALS

Make corrections required by the Contracting Officer. If the Contractor considers any correction or notation on the returned submittals to constitute a change to the contract drawings or specifications, give notice to the Contracting Officer as required under the FAR clause titled CHANGES. The Contractor is responsible for the dimensions and design of connection details and the construction of work. Failure to point out variations may cause the Government to require rejection and removal of such work at the Contractor's expense.

If changes are necessary to submittals, make such revisions and resubmit in accordance with the procedures above. No item of work requiring a submittal change is to be accomplished until the changed submittals are approved.

1.13 APPROVED SUBMITTALS

The Contracting Officer's approval of submittals is not to be construed as a complete check, and indicates only that the general method of construction, materials, detailing, and other information are satisfactory.

Approval or acceptance by the Government for a submittal does not relieve the Contractor of the responsibility for meeting the contract requirements or for any error that may exist, because under the Quality Control (QC) requirements of this contract, the Contractor is responsible for ensuring information contained with in each submittal accurately conforms with the requirements of the contract documents.

After submittals have been approved or accepted by the Contracting Officer, no resubmittal for the purpose of substituting materials or equipment will be considered unless accompanied by an explanation of why a substitution is necessary.

1.14 APPROVED SAMPLES

Approval of a sample is only for the characteristics or use named in such approval and is not be construed to change or modify any contract requirements. Before submitting samples, provide assurance that the materials or equipment will be available in quantities required in the project. No change or substitution will be permitted after a sample has been approved.

Match the approved samples for materials and equipment incorporated in the work. If requested, approved samples, including those that may be damaged in testing, will be returned to the Contractor, at its expense, upon completion of the contract. Unapproved samples will also be returned to the Contractor at its expense, if so requested.

Failure of any materials to pass the specified tests will be sufficient cause for refusal to consider, under this contract, any further samples of the same brand or make as that material. The Government reserves the right to disapprove any material or equipment that has previously proved unsatisfactory in service.

Samples of various materials or equipment delivered on the site or in place may be taken by the Contracting Officer for testing. Samples failing to meet contract requirements will automatically void previous approvals. Replace such materials or equipment to meet contract requirements.

1.15 WITHHOLDING OF PAYMENT

Payment for materials incorporated in the work will not be made if required approvals have not been obtained.

1.16 CERTIFICATION OF SUBMITTAL DATA

Certify the submittal data as follows on Form ENG 4025: "I certify that the above submitted items had been reviewed in detail and are correct and in strict conformance with the contract drawings and specifications except as otherwise stated.

_____NAME OF CONTRACTOR _____ SIGNATURE OF CONTRACTOR

PART 2 PRODUCTS

Not Used

PART 3 EXECUTION

Not Used

-- End of Section --

This page was intentionally left blank for duplex printing.

SUBMITTAL REGISTER

CONTRACT NO.

TITLE AND LOCATION
Upper Basin Resident Office at G, Garrison Dam, ND

CONTRACTOR

ACTIVITY NO	TRANSMITTAL NO	SPEC SECT	DESCRIPTION ITEM SUBMITTED	PARAGRAPH #	CLASSIFICATION	GOVT OR A/E REVWR	CONTRACTOR: SCHEDULE DATES			CONTRACTOR ACTION			APPROVING AUTHORITY				MAILED TO CONTR/ DATE RCD FRM APPR AUTH	REMARKS
							SUBMIT	APPROVAL NEEDED BY	MATERIAL NEEDED BY	ACTION CODE	DATE OF ACTION	DATE FWD TO APPR AUTH/ DATE RCD FROM CONTR	DATE FWD TO OTHER REVIEWER	DATE RCD FROM OTH REVIEWER	ACTION CODE	DATE OF ACTION		
(a)	(b)	(c)	(d)	(e)	(f)		(g)	(h)	(i)	(j)	(k)	(l)	(m)	(n)	(o)	(p)	(q)	(r)
		01 12 00	SD-01 Preconstruction Submittals															
			Proposed Methods of Operation	1.5	G	AO												
			Progress Charts	1.7	G	AO												
			SD-11 Closeout Submittals															
			Warranty of Construction	1.8														
			Final As-Built Drawings	1.11	G	DO												
		01 30 00.24	SD-01 Preconstruction Submittals															
			iWATCH and/or CorpsWatch	1.6														
			Training Sign In Sheets															
			E-Verify	1.6														
			Contractor Computer	1.22.1.4	G	RO												
			Cybersecurity Compliance															
			Statements															
		01 33 00	SD-01 Preconstruction Submittals															
			Submittal Register	1.8	G	AO												
		01 35 26	SD-01 Preconstruction Submittals															
			Accident Prevention Plan (APP)	1.8	G	AO												
			SD-06 Test Reports															
			Accident Reports	1.12.2	G	AO												
			Monthly Exposure Reports	1.5	G	AO												
			SD-07 Certificates															
			Activity Hazard Analysis (AHA)	1.9	G	AO												
		01 45 00	SD-01 Preconstruction Submittals															
			Contractor Quality Control (CQC)	1.5.2	G	AO												
			Plan															
			SD-06 Test Reports															

SUBMITTAL REGISTER

CONTRACT NO.

TITLE AND LOCATION
Upper Basin Resident Office at G, Garrison Dam, ND

CONTRACTOR

ACTIVITY NO	TRANSMITTAL NO	SPEC SECT	DESCRIPTION ITEM SUBMITTED	PARAGRAPH #	CLASSIFICATION	GOVT OR A/E REVWR	CONTRACTOR: SCHEDULE DATES			CONTRACTOR ACTION			APPROVING AUTHORITY					
							SUBMIT	APPROVAL NEEDED BY	MATERIAL NEEDED BY	ACTION CODE	DATE OF ACTION	DATE FWD TO APPR AUTH/ DATE RCD FROM CONTR	DATE FWD TO OTHER REVIEWER	DATE RCD FROM OTH REVIEWER	ACTION CODE	DATE OF ACTION	MAILED TO CONTR/ DATE RCD FRM APPR AUTH	REMARKS
(a)	(b)	(c)	(d)	(e)	(f)		(g)	(h)	(i)	(j)	(k)	(l)	(m)	(n)	(o)	(p)	(q)	(r)
		01 45 00	Verification Statement	1.12.3														
		01 57 20.00 10	SD-01 Preconstruction Submittals															
			Environmental Protection Plan	1.8	G	AO												
		02 41 00	SD-01 Preconstruction Submittals															
			Demolition Plan	1.2.2	G	RO												
			Existing Conditions	1.10														
			SD-07 Certificates															
			Notification	1.7	G	RO												
			SD-11 Closeout Submittals															
			Receipts															
		02 82 00	SD-03 Product Data															
			Amended Water	1.2.1	G													
			Safety Data Sheets (SDS) for All	1.3.8	G													
			Materials															
			Encapsulants	2.1	G													
			Respirators	3.1.2.1	G													
			Local Exhaust Equipment	3.1.7	G													
			Pressure Differential Automatic	3.1.7	G													
			Recording Instrument															
			Vacuums	3.1.8	G													
			Glovebags	3.1.10	G													
			SD-06 Test Reports															
			Air Sampling Results	1.5.5	G													
			Pressure Differential Recordings	1.5.6	G													
			for Local Exhaust System															
			Encapsulation Test Patches		G													

SUBMITTAL REGISTER

CONTRACT NO.

TITLE AND LOCATION
Upper Basin Resident Office at G, Garrison Dam, ND

CONTRACTOR

ACTIVITY NO	TRANSMITTAL NO	SPEC SECT	DESCRIPTION ITEM SUBMITTED	PARAGRAPH #	CLASSIFICATION	GOVT OR A/E REVWR	CONTRACTOR: SCHEDULE DATES			CONTRACTOR ACTION			APPROVING AUTHORITY				MAILED TO CONTR/ DATE RCD FRM APPR AUTH	REMARKS
							SUBMIT	APPROVAL NEEDED BY	MATERIAL NEEDED BY	ACTION CODE	DATE OF ACTION	DATE FWD TO APPR AUTH/ DATE RCD FROM CONTR	DATE FWD TO OTHER REVIEWER	DATE RCD FROM OTH REVIEWER	ACTION CODE	DATE OF ACTION		
(a)	(b)	(c)	(d)	(e)	(f)		(g)	(h)	(i)	(j)	(k)	(l)	(m)	(n)	(o)	(p)	(q)	(r)
		02 82 00	Clearance Sampling	3.2.12.5	G													
			Asbestos Disposal Quantity	3.3.3.2	G													
			Report															
			SD-07 Certificates															
			Employee Training	1.3.3	G													
			Notifications	1.3.4	G													
			Respiratory Protection Program	1.3.6	G													
			Asbestos Hazard Abatement Plan	1.3.9	G													
			Testing Laboratory	1.3.10	G													
			Landfill Approval	1.3.11	G													
			Delivery Tickets	1.3.11	G													
			Waste Shipment Records	1.3.11	G													
			Transporter Certification	1.3.12	G													
			Medical Certification	1.3.13	G													
			Private Qualified Person	1.5.1	G													
			Documentation															
			Designated Competent Person	1.5.2	G													
			Worker's License	1.5.3	G													
			Contractor's License	1.5.4	G													
			Federal, State or Local Citations	1.5.7	G													
			on Previous Projects															
			Encapsulants	2.1	G													
			Equipment Used to Contain	3.1	G													
			Airborne Asbestos Fibers															
			Water Filtration Equipment	3.1.3.3	G													
			Vacuums	3.1.8	G													

SUBMITTAL REGISTER

CONTRACT NO.

TITLE AND LOCATION
Upper Basin Resident Office at G, Garrison Dam, ND

CONTRACTOR

ACTIVITY NO	TRANSMITTAL NO	SPEC SECT	DESCRIPTION ITEM SUBMITTED	PARAGRAPH #	CLASSIFICATION	GOVT OR A/E REVWR	CONTRACTOR: SCHEDULE DATES			CONTRACTOR ACTION			APPROVING AUTHORITY				MAILED TO CONTR/ DATE RCD FRM APPR AUTH	REMARKS
							SUBMIT	APPROVAL NEEDED BY	MATERIAL NEEDED BY	ACTION CODE	DATE OF ACTION	DATE FWD TO APPR AUTH/ DATE RCD FROM CONTR	DATE FWD TO OTHER REVIEWER	DATE RCD FROM OTH REVIEWER	ACTION CODE	DATE OF ACTION		
(a)	(b)	(c)	(d)	(e)	(f)		(g)	(h)	(i)	(j)	(k)	(l)	(m)	(n)	(o)	(p)	(q)	(r)
		02 82 00	Ventilation Systems	3.1.8	G													
			SD-11 Closeout Submittals															
			Permits[and Licenses]	1.3.4	G													
			Notifications	1.3.4	G													
			Respirator Program Records	1.3.6.1	G													
			Rental Equipment	1.7.1	G													
		09 65 00	SD-02 Shop Drawings															
			Resilient Flooring and	2.3														
			Accessories															
			SD-03 Product Data															
			Resilient Flooring and	2.3														
			Accessories															
			Adhesives	2.2														
			Wall Base	2.1	G DO													
			SD-04 Samples															
			Resilient Flooring and	2.3	G DO													
			Accessories															
			SD-06 Test Reports															
			Moisture, Alkalinity, and Bond															
			Tests															
			SD-07 Certificates															
			Indoor Air Quality for Wall Base	2.1														
			Indoor Air Quality for Adhesives	2.2														
			SD-08 Manufacturer's Instructions															
			Surface Preparation															
			Installation	3.1														

SUBMITTAL REGISTER

CONTRACT NO.

TITLE AND LOCATION
Upper Basin Resident Office at G, Garrison Dam, ND

CONTRACTOR

ACTIVITY NO	TRANSMITTAL NO	SPEC SECT	DESCRIPTION ITEM SUBMITTED	PARAGRAPH #	CLASSIFICATION	GOVT OR A/E REVWR	CONTRACTOR: SCHEDULE DATES			CONTRACTOR ACTION			APPROVING AUTHORITY					
							SUBMIT	APPROVAL NEEDED BY	MATERIAL NEEDED BY	ACTION CODE	DATE OF ACTION	DATE FWD TO APPR AUTH/ DATE RCD FROM CONTR	DATE FWD TO OTHER REVIEWER	DATE RCD FROM OTH REVIEWER	ACTION CODE	DATE OF ACTION	MAILED TO CONTR/ DATE RCD FRM APPR AUTH	REMARKS
(a)	(b)	(c)	(d)	(e)	(f)		(g)	(h)	(i)	(j)	(k)	(l)	(m)	(n)	(o)	(p)	(q)	(r)
		09 65 00	SD-10 Operation and Maintenance															
			Data															
			Resilient Flooring and	2.3														
			Accessories															
		09 68 00	SD-02 Shop Drawings															
			Installation Drawings	3.4														
			SD-03 Product Data															
			Carpet	2.1	G DO													
			Recycled Content for Carpeting	2.1.1														
			Indoor Air Quality for Aerosol	2.3														
			Adhesives															
			Indoor Air Quality for Non-Aerosol	2.3														
			Adhesives															
			Indoor Air Quality for Concrete	2.3														
			Primer															
			SD-04 Samples															
			Carpet	2.1	G DO													
			Sustainable Product Certifications															
			SD-06 Test Reports															
			Moisture and Alkalinity Tests	3.2														
			SD-07 Certificates															
			Indoor Air Quality for Carpet	2.1.3														
			SD-08 Manufacturer’s Instructions															
			Surface Preparation	3.1														
			SD-10 Operation and Maintenance															
			Data															

SUBMITTAL REGISTER

CONTRACT NO.

TITLE AND LOCATION
Upper Basin Resident Office at G, Garrison Dam, ND

CONTRACTOR

ACTIVITY NO	TRANSMITTAL NO	SPEC SECT	DESCRIPTION ITEM SUBMITTED	PARAGRAPH #	CLASSIFICATION	GOVT OR A/E REVWR	CONTRACTOR: SCHEDULE DATES			CONTRACTOR ACTION			APPROVING AUTHORITY					
							SUBMIT	APPROVAL NEEDED BY	MATERIAL NEEDED BY	ACTION CODE	DATE OF ACTION	DATE FWD TO APPR AUTH/ DATE RCD FROM CONTR	DATE FWD TO OTHER REVIEWER	DATE RCD FROM OTH REVIEWER	ACTION CODE	DATE OF ACTION	MAILED TO CONTR/ DATE RCD FRM APPR AUTH	REMARKS
(a)	(b)	(c)	(d)	(e)	(f)		(g)	(h)	(i)	(j)	(k)	(l)	(m)	(n)	(o)	(p)	(q)	(r)
		09 68 00	Cleaning and Protection	3.5														
			Maintenance Service															
			SD-11 Closeout Submittals															
			Warranty	1.6														
		09 90 00	SD-02 Shop Drawings															
			Piping Identification															
			SD-03 Product Data															
			Coating	2.1	G	DO												
			Product Data Sheets	2.1														
			Sealant															
			SD-04 Samples															
			Color	2.2	G	DO												
			SD-07 Certificates															
			Indoor Air Quality for Paints and	1.6.4														
			Primers															
			SD-08 Manufacturer’s Instructions															
			Application Instructions	3.2.1														
			Mixing	2.1														
			Manufacturer's Safety Data	1.8.1														
			Sheets															
			SD-10 Operation and Maintenance															
			Data															
			Coatings	2.1														
		10 44 16	SD-02 Shop Drawings															
			Fire Extinguishers	2.1.1	G	RO												
			Accessories	Part 2	G	RO												

SUBMITTAL REGISTER

CONTRACT NO.

TITLE AND LOCATION
Upper Basin Resident Office at G, Garrison Dam, ND

CONTRACTOR

ACTIVITY NO	TRANSMITTAL NO	SPEC SECT	DESCRIPTION ITEM SUBMITTED	PARAGRAPH #	CLASSIFICATION	GOVT OR A/E REVWR	CONTRACTOR: SCHEDULE DATES			CONTRACTOR ACTION			APPROVING AUTHORITY				MAILED TO CONTR/ DATE RCD FRM APPR AUTH	REMARKS
							SUBMIT	APPROVAL NEEDED BY	MATERIAL NEEDED BY	ACTION CODE	DATE OF ACTION	DATE FWD TO APPR AUTH/ DATE RCD FROM CONTR	DATE FWD TO OTHER REVIEWER	DATE RCD FROM OTH REVIEWER	ACTION CODE	DATE OF ACTION		
(a)	(b)	(c)	(d)	(e)	(f)		(g)	(h)	(i)	(j)	(k)	(l)	(m)	(n)	(o)	(p)	(q)	(r)
		10 44 16	Cabinets	Part 2	G	RO												
			SD-03 Product Data															
			Fire Extinguishers	2.1.1	G	RO												
			Accessories	Part 2	G	RO												
			Cabinets	Part 2	G	RO												
			Replacement Parts List	3.2.1	G	RO												
			SD-04 Samples															
			Equipment Samples	1.3.1	G	RO												
			SD-07 Certificates															
			Fire Extinguishers Certifications	2.1.1	G	RO												
			Manufacturer's Warranty with	1.4	G	RO												
			Inspection Tag															
		12 21 00	SD-02 Shop Drawings															
			Installation	3.3														
			SD-03 Product Data															
			Window Blinds	2.1	G	DO												
			SD-04 Samples															
			Window Blinds	2.1	G	DO												
			SD-06 Test Reports															
			Window Blinds	2.1														
			SD-08 Manufacturer’s Instructions															
			Window Blinds	2.1	G													
			SD-10 Operation and Maintenance															
			Data															
			Window Blinds	2.1	G													
		12 50 00.13 10	SD-01 Preconstruction Submittals															

SUBMITTAL REGISTER

CONTRACT NO.

TITLE AND LOCATION
Upper Basin Resident Office at G, Garrison Dam, ND

CONTRACTOR

ACTIVITY NO	TRANSMITTAL NO	SPEC SECT	DESCRIPTION ITEM SUBMITTED	PARAGRAPH #	CLASSIFICATION	GOVT OR A/E REVWR	CONTRACTOR: SCHEDULE DATES			CONTRACTOR ACTION			APPROVING AUTHORITY				MAILED TO CONTR/ DATE RCD FRM APPR AUTH	REMARKS
							SUBMIT	APPROVAL NEEDED BY	MATERIAL NEEDED BY	ACTION CODE	DATE OF ACTION	DATE FWD TO APPR AUTH/ DATE RCD FROM CONTR	DATE FWD TO OTHER REVIEWER	DATE RCD FROM OTH REVIEWER	ACTION CODE	DATE OF ACTION		
(a)	(b)	(c)	(d)	(e)	(f)		(g)	(h)	(i)	(j)	(k)	(l)	(m)	(n)	(o)	(p)	(q)	(r)
		12 50 00.13 10	Storage Location		G	RO												
			SD-02 Shop Drawings															
			Installation Drawings	3.3.1	G	DO												
			SD-03 Product Data															
			Product Data	2.2	G	DO												
			Product Style Options	2.2	G	DO												
			SD-04 Samples															
			Fabric and Finishes	2.2.4	G	DO												
			SD-07 Certificates															
			Authorized Dealer	1.6														
			Certified Furniture Installers	1.6														
			Manufacturer's Certification	2.2														
			Warranty	1.8														
			SD-10 Operation and Maintenance															
			Data															
			Furniture, Data Package 1	3.5														
			SD-11 Closeout Submittals															
			Reduced VOC's for Furniture	2.1.2														
			Recycled Content of Furniture	2.1.3														
			Bio-Based Content of Furniture	2.1.4														
		12 59 00	SD-02 Shop Drawings															
			Detail Drawings	1.4.4	G	DO												
			SD-03 Product Data															
			Warranty	1.6														
			Workstations	2.2.1														

SUBMITTAL REGISTER

CONTRACT NO.

TITLE AND LOCATION
Upper Basin Resident Office at G, Garrison Dam, ND

CONTRACTOR

ACTIVITY NO	TRANSMITTAL NO	SPEC SECT	DESCRIPTION ITEM SUBMITTED	PARAGRAPH #	CLASSIFICATION	GOVT OR A/E REVWR	CONTRACTOR: SCHEDULE DATES			CONTRACTOR ACTION			APPROVING AUTHORITY					
							SUBMIT	APPROVAL NEEDED BY	MATERIAL NEEDED BY	ACTION CODE	DATE OF ACTION	DATE FWD TO APPR AUTH/ DATE RCD FROM CONTR	DATE FWD TO OTHER REVIEWER	DATE RCD FROM OTH REVIEWER	ACTION CODE	DATE OF ACTION	MAILED TO CONTR/ DATE RCD FRM APPR AUTH	REMARKS
(a)	(b)	(c)	(d)	(e)	(f)		(g)	(h)	(i)	(j)	(k)	(l)	(m)	(n)	(o)	(p)	(q)	(r)
		12 59 00	Recycled Content for system	2.1														
			furniture components															
			Energy Star Label for Task	2.10.1														
			Lighting															
			SD-04 Samples															
			Workstations	2.2.1	G DO													
			Samples	2.2.2														
			SD-06 Test Reports															
			Selected Components	2.2.4.1														
			Fire Safety	1.4.2														
			SD-07 Certificates															
			Workstations	2.2.1														
			SD-10 Operation and Maintenance															
			Data															
			Assembly Manuals	2.3.1														
			Maintenance Manuals	3.2														
			Cleaning	3.2														
			Installation	3.1														
		26 20 00	SD-02 Shop Drawings															
			Wireways	2.15	G DO													
			Marking Strips	3.1.5.1	G DO													
			SD-03 Product Data															
			Receptacles	2.10	G DO													
			SD-06 Test Reports															
			600-volt Wiring Test	3.5.2	G PO													

SUBMITTAL REGISTER

CONTRACT NO.

TITLE AND LOCATION
Upper Basin Resident Office at G, Garrison Dam, ND

CONTRACTOR

ACTIVITY NO	TRANSMITTAL NO	SPEC SECT	DESCRIPTION ITEM SUBMITTED	PARAGRAPH #	CLASSIFICATION	GOVT OR A/E REVWR	CONTRACTOR: SCHEDULE DATES			CONTRACTOR ACTION			APPROVING AUTHORITY				MAILED TO CONTR/ DATE RCD FRM APPR AUTH	REMARKS
							SUBMIT	APPROVAL NEEDED BY	MATERIAL NEEDED BY	ACTION CODE	DATE OF ACTION	DATE FWD TO APPR AUTH/ DATE RCD FROM CONTR	DATE FWD TO OTHER REVIEWER	DATE RCD FROM OTH REVIEWER	ACTION CODE	DATE OF ACTION		
(a)	(b)	(c)	(d)	(e)	(f)		(g)	(h)	(i)	(j)	(k)	(l)	(m)	(n)	(o)	(p)	(q)	(r)
		26 20 00	SD-10 Operation and Maintenance															
			Data															
			Electrical Systems	1.5.1	G	PO												
		26 51 00	SD-03 Product Data															
			Light Sources	2.2	G	RO												
		27 10 00	SD-02 Shop Drawings															
			Telecommunications Drawings	1.6.1.1	G	DO												
			Telecommunications Space	1.6.1.2	G	DO												
			Drawings															
			SD-03 Product Data															
			Telecommunications Cabling	2.3	G	DO												
			Patch Panels		G	DO												
			Telecommunications	2.5	G	DO												
			Outlet/Connector Assemblies															
			Equipment Support Frame		G													
			Connector Blocks		G	DO												
			Spare Parts		G	DO												
			SD-06 Test Reports															
			Telecommunications Cabling	3.5.1	G	RO												
			Testing															
			SD-07 Certificates															
			Telecommunications Contractor	1.6.2.1	G	RO												
			Key Personnel	1.6.2.2	G	RO												
			Manufacturer Qualifications	1.6.2.3	G	RO												
			Test Plan	1.6.3	G	RO												

SUBMITTAL REGISTER

CONTRACT NO.

TITLE AND LOCATION
Upper Basin Resident Office at G, Garrison Dam, ND

CONTRACTOR

ACTIVITY NO	TRANSMITTAL NO	SPEC SECT	DESCRIPTION ITEM SUBMITTED	PARAGRAPH #	CLASSIFICATION	GOVT OR A/E REVWR	CONTRACTOR: SCHEDULE DATES			CONTRACTOR ACTION			APPROVING AUTHORITY				MAILED TO CONTR/ DATE RCD FRM APPR AUTH	REMARKS
							SUBMIT	APPROVAL NEEDED BY	MATERIAL NEEDED BY	ACTION CODE	DATE OF ACTION	DATE FWD TO APPR AUTH/ DATE RCD FROM CONTR	DATE FWD TO OTHER REVIEWER	DATE RCD FROM OTH REVIEWER	ACTION CODE	DATE OF ACTION		
(a)	(b)	(c)	(d)	(e)	(f)		(g)	(h)	(i)	(j)	(k)	(l)	(m)	(n)	(o)	(p)	(q)	(r)
		27 10 00	SD-09 Manufacturer's Field															
			Reports															
			Factory Reel Tests	2.10.1	G	RO												
			SD-10 Operation and Maintenance															
			Data															
			Telecommunications Cabling and	1.10.1	G	RO												
			Pathway System															
			SD-11 Closeout Submittals															
			Record Documentation	1.10.2	G	RO												
		28 31 60	SD-01 Preconstruction Submittals															
			Installer	1.8.2.2	G													
			SD-02 Shop Drawings															
			Wiring Diagrams	1.8.1.4	G													
			System Layout	1.8.1.5	G													
			Notification Appliances	1.8.1.6	G													
			Initiating devices		G	AO												
			SD-03 Product Data															
			Notification Appliances	1.8.1.6	G													
			Alarm Wiring		G													
			SD-06 Test Reports															
			Test Procedures	3.6.1	G													
			SD-07 Certificates															
			Verification of Compliant		G													
			Installation															
			Request for Government Final		G													
			Test															

SUBMITTAL REGISTER

CONTRACT NO.

TITLE AND LOCATION
Upper Basin Resident Office at G, Garrison Dam, ND

CONTRACTOR

ACTIVITY NO	TRANSMITTAL NO	SPEC SECT	DESCRIPTION ITEM SUBMITTED	PARAGRAPH #	CLASSIFICATION	GOVT OR A/E REVWR	CONTRACTOR: SCHEDULE DATES			CONTRACTOR ACTION			APPROVING AUTHORITY				MAILED TO CONTR/ DATE RCD FRM APPR AUTH	REMARKS
							SUBMIT	APPROVAL NEEDED BY	MATERIAL NEEDED BY	ACTION CODE	DATE OF ACTION	DATE FWD TO APPR AUTH/ DATE RCD FROM CONTR	DATE FWD TO OTHER REVIEWER	DATE RCD FROM OTH REVIEWER	ACTION CODE	DATE OF ACTION		
(a)	(b)	(c)	(d)	(e)	(f)		(g)	(h)	(i)	(j)	(k)	(l)	(m)	(n)	(o)	(p)	(q)	(r)
		28 31 60	SD-11 Closeout Submittals															
			As-Built Drawings	1.8.1.8														

U.S. Army Corps of Engineers (USACE)

TRANSMITTAL OF SHOP DRAWINGS, EQUIPMENT DATA, MATERIAL SAMPLES, OR MANUFACTURER'S CERTIFICATES OF COMPLIANCE

For use of this form, see ER 415-1-10; the proponent agency is CECW-CE.

DATE	TRANSMITTAL NO.

SECTION I - REQUEST FOR APPROVAL OF THE FOLLOWING ITEMS (*This section will be initiated by the contractor*)

TO:	FROM:	CONTRACT NO.	CHECK ONE: ☐ THIS IS A NEW TRANSMITTAL ☐ THIS IS A RESUBMITTAL OF TRANSMITTAL _____

SPECIFICATION SEC. NO. (*Cover only one section with each transmittal*)	PROJECT TITLE AND LOCATION	THIS TRANSMITTAL IS FOR: (*Check one*) ☐ FIO ☐ GA ☐ DA ☐ CR ☐ DA/CR ☐ DA/GA

ITEM NO. (*See Note 3*)	**DESCRIPTION OF SUBMITTAL ITEM** (*Type size, model number/etc.*)	**SUBMITTAL TYPE CODE** (*See Note 8*)	**NO. OF COPIES**	**CONTRACT DOCUMENT REFERENCE**		**CONTRACTOR REVIEW CODE**	**VARIATION** Enter "Y" if requesting a variation (*See Note 6*)	**USACE ACTION CODE** (*Note 9*)
				SPEC. PARA. NO.	**DRAWING SHEET NO.**			
a.	**b.**	**c.**	**d.**	**e.**	**f.**	**g.**	**h.**	**i.**

REMARKS	I certify that the above submitted items had been reviewed in detail and are correct and in strict conformance with the contract drawings and specifications except as otherwise stated.	
	NAME OF CONTRACTOR	SIGNATURE OF CONTRACTOR

SECTION II - APPROVAL ACTION

ENCLOSURES RETURNED (*List by item No.*)	NAME AND TITLE OF APPROVING AUTHORITY	SIGNATURE OF APPROVING AUTHORITY	DATE

INSTRUCTIONS

1. Section I will be initiated by the Contractor in the required number of copies.

2. Each Transmittal shall be numbered consecutively. The Transmittal Number typically includes two parts separated by a dash (-). The first part is the specification section number. The second part is a sequential number for the submittals under that spec section. If the Transmittal is a resubmittal, then add a decimal point to the end of the original Transmittal Number and begin numbering the resubmittal packages sequentially after the decimal.

3. The "Item No." for each entry on this form will be the same "Item No." as indicated on ENG FORM 4288-R.

4. Submittals requiring expeditious handling will be submitted on a separate ENG Form 4025-R.

5. Items transmitted on each transmittal form will be from the same specification section. Do not combine submittal information from different specification sections in a single transmittal.

6. If the data submitted are intentionally in variance with the contract requirements, indicate a variation in column h, and enter a statement in the Remarks block describing he detailed reason for the variation.

7. ENG Form 4025-R is self-transmitting - a letter of transmittal is not required.

8. When submittal items are transmitted, indicate the "Submittal Type" (*SD-01 through SD-11*) in column c of Section I.
   Submittal types are the following:
   SD-01 - Preconstruction SD-02 - Shop Drawings SD-03 - Product Data SD-04 - Samples SD-05 - Design Data SD-06 - Test Reports
   SD-07 - Certificates SD-08 - Manufacturer's Instructions SD-09 - Manufacturer's Field Reports SD-10 - O&M Data SD-11 - Closeout

9. For each submittal item, the Contractor will assign Submittal Action Codes in column g of Section I. The U.S. Army Corps of Engineers approving authority will assign Submittal Action Codes in column i of Section I. The Submittal Action Codes are:

   A -- Approved as submitted.
   B -- Approved, except as noted on drawings. Resubmission not required.
   C -- Approved, except as noted on drawings. Refer to attached comments. Resubmission required.
   D -- Will be returned by separate correspondence.
   E -- Disapproved. Refer to attached comments.
   F -- Receipt acknowledged.
   X -- Receipt acknowledged, does not comply with contract requirements, as noted.
   G -- Other action required *(Specify)*
   K -- Government concurs with intermediate design. (*For D-B contracts*)
   R -- Design submittal is acceptable for release for construction. (*For D-B contracts*)

10. Approval of items does not relieve the contractor from complying with all the requirements of the contract.

SECTION TABLE OF CONTENTS

DIVISION 01 - GENERAL REQUIREMENTS

SECTION 01 35 26

GOVERNMENTAL SAFETY REQUIREMENTS

PART 1 GENERAL

1.1 REFERENCES
1.2 DEFINITIONS
1.2.1 Site Safety and Health Officer (SSHO)
1.2.1.1 Level One SSHO
1.2.1.2 Level Two SSHO
1.2.1.3 Level Three SSHO
1.2.1.4 Alternate SSHO
1.2.2 Competent Person (CP)
1.2.3 Qualified Person (QP)
1.3 SUBMITTALS
1.4 PUBLIC HEALTH EMERGENCIES
1.5 MONTHLY EXPOSURE REPORTS
1.6 REGULATORY REQUIREMENTS
1.7 SITE QUALIFICATIONS, DUTIES, AND MEETINGS
1.7.1 Site Safety and Health Officer (SSHO)
1.7.1.1 Qualifications of SSHO
1.7.1.2 Duties of SSHO
1.7.1.3 Safety Meetings
1.7.2 Roles and Responsibilities of Prime Contractor and SSHO
1.7.3 Contract Site Safety and Health Officer(s)(SSHOs) Minimum Requirements for Projects with Limited Scope.
1.7.4 Preconstruction Conference
1.8 ACCIDENT PREVENTION PLAN (APP)
1.8.1 Accident Prevention Plan (APP)
1.8.2 Names and Qualifications
1.9 ACTIVITY HAZARD ANALYSIS (AHA)
1.9.1 AHA Management
1.9.2 AHA Signature Log
1.10 SITE SAFETY REFERENCE MATERIALS
1.11 EMERGENCY MEDICAL TREATMENT
1.12 NOTIFICATIONS AND REPORTS
1.12.1 Accident Notification
1.12.2 Accident Reports
1.13 SEVERE STORM PLAN

PART 2 PRODUCTS

PART 3 EXECUTION

3.1 CONSTRUCTION AND OTHER WORK
3.1.1 Worksite Communication
3.1.2 Hazardous Material Exclusions
3.1.3 Unforeseen Hazardous Material

3.2 EQUIPMENT
3.2.1 Use of Explosives
3.3 ELECTRICAL
3.3.1 Electrical Work
3.3.2 Qualifications
3.3.3 Arc Flash
3.3.4 Grounding
3.3.5 Testing

-- End of Section Table of Contents --

SECTION 01 35 26

GOVERNMENTAL SAFETY REQUIREMENTS

PART 1 GENERAL

1.1 REFERENCES

The publications listed below form a part of this specification to the extent referenced. The publications are referred to within the text by the basic designation only.

AMERICAN SOCIETY OF SAFETY PROFESSIONALS (ASSP)

ANSI/ASSP A10.34	(2021) Protection of the Public on or Adjacent to Construction Sites

ASTM INTERNATIONAL (ASTM)

ASTM F855	(2020) Standard Specifications for Temporary Protective Grounds to Be Used on De-energized Electric Power Lines and Equipment

INSTITUTE OF ELECTRICAL AND ELECTRONICS ENGINEERS (IEEE)

IEEE 1048	(2016) Guide for Protective Grounding of Power Lines
IEEE C2	(2023) National Electrical Safety Code

INTERNATIONAL SAFETY EQUIPMENT ASSOCIATION (ISEA)

ANSI/ISEA Z89.1	(2014; R 2019) American National Standard for Industrial Head Protection

NATIONAL FIRE PROTECTION ASSOCIATION (NFPA)

NFPA 70	(2023; ERTA 1 2024; TIA 24-1) National Electrical Code
NFPA 70E	(2024) Standard for Electrical Safety in the Workplace
NFPA 241	(2022) Standard for Safeguarding Construction, Alteration, and Demolition Operations

U.S. ARMY CORPS OF ENGINEERS (USACE)

EM 385-1-1	(2024) Safety -- Safety and Occupational Health (SOH) Requirements

U.S. NATIONAL ARCHIVES AND RECORDS ADMINISTRATION (NARA)

29 CFR 1910	Occupational Safety and Health Standards

1.2 DEFINITIONS

The following definitions are for the convenience of the reader. If there is a referenced document in the text of this specification section, that is the document that should define terms for that paragraph. If further clarification is needed, contact the Contracting Officer.

1.2.1 Site Safety and Health Officer (SSHO)

A Contractor Employee that is responsible for overseeing and ensuring implementation of the prime Contractor's Safety and Occupational Health (SOH) program according to the Contract, EM 385-1-1, applicable federal, state, and local requirements.

1.2.1.1 Level One SSHO

A designated employee with full-time SOH responsibility that meets and follows the requirements of EM 385-1-1.

1.2.1.2 Level Two SSHO

A designated employee with Level Two SSHO responsibility that meets and follows the requirements of EM 385-1-1. Level Two SSHOs cannot be assigned to projects that have a residual Risk Assessment Code (RAC) of high or extremely high.

1.2.1.3 Level Three SSHO

A designated Qualified Person or Competent Person with SOH responsibility that meets and follows the requirements of EM 385-1-1. Level 3 SSHOs cannot be assigned to projects that have a residual RAC of high or extremely high.

1.2.1.4 Alternate SSHO

An employee that meets the definition of the contract-required level SSHO, but is not the primary SSHO.

1.2.2 Competent Person (CP)

The CP is a person designated in writing, who, through training, knowledge and experience, is capable of identifying, evaluating, and addressing existing and predictable hazards in the working environment or working conditions that are unsanitary, hazardous, or dangerous to personnel, and who has authorization to take prompt corrective measures to eliminate them.

1.2.3 Qualified Person (QP)

The QP is a person designated in writing, who, by possession of a recognized degree, certificate, or professional standing, or extensive knowledge, training, and experience, has successfully demonstrated their ability to solve or resolve problems related to the subject matter, the work, or the project.

1.3 SUBMITTALS

Government Acceptance or Approval does not remove responsibility from the Contractors for their actions or liability.

Government approval is required for submittals with a "G" classification. Submittals not having a "G" classification are for information only. When used, a code following the "G" classification identifies the office that will review the submittal for the Government. Submit the following in accordance with Section 01 33 00 SUBMITTAL PROCEDURES:

SD-01 Preconstruction Submittals

Accident Prevention Plan (APP); G, AO

SD-06 Test Reports

Accident Reports; G, AO

Monthly Exposure Reports; G, AO

SD-07 Certificates

Activity Hazard Analysis (AHA); G, AO

1.4 PUBLIC HEALTH EMERGENCIES

In the event of a declared public health emergency, follow safety precautions as required by the Occupational Safety and Health Administration (OSHA) www.osha.gov, the Centers for Disease Control and Prevention (CDC) www.cdc.gov, and as required by federal, state and local requirements.

1.5 MONTHLY EXPOSURE REPORTS

Provide a Monthly Exposure Report by the fifth of each month. This report is a compilation of employee-hours worked each month for all site workers, both Prime and subcontractor. Failure to submit the report may result in retention of up to 10 percent of the progress payment.

1.6 REGULATORY REQUIREMENTS

In addition to the detailed requirements included in the provisions of this Contract, comply with the most recent edition of USACE EM 385-1-1, and the following federal, state, and local laws, ordinances, criteria, rules and regulations at the date of the Solicitation for this Contract. Submit matters of interpretation of standards to the appropriate administrative agency for resolution before starting work. Where the requirements of this specification, applicable laws, criteria, ordinances, regulations, and referenced documents vary, the most stringent requirements govern.

1.7 SITE QUALIFICATIONS, DUTIES, AND MEETINGS

1.7.1 Site Safety and Health Officer (SSHO)

1.7.1.1 Qualifications of SSHO

All SSHOs will have met the training, experience requirements identified in the EM 385-1-1 and this Contract.

1.7.1.2 Duties of SSHO

All SSHOs will carry out the roles and responsibilities as identified in this Contract and the EM 385-1-1. All SSHOs will be designated on an ENG Form 6282, provided by the Contracting Officer. Superintendent, QC Manager, and SSHO are subject to dismissal if their required duties are not being effectively carried out. If either the Superintendent, QC Manager, or SSHO are dismissed, project work will be stopped and will not be allowed to resume until a suitable replacement is approved and the above duties are again being effectively carried out.

1.7.1.3 Safety Meetings

Conduct safety meetings to review past activities, plan for new or changed operations, review pertinent aspects of appropriate AHA (by trade), establish safe working procedures for anticipated hazards, and provide pertinent Safety and Occupational Health (SOH) training and motivation. Conduct meetings at least once a month for all supervisors at the project location. The SSHO, supervisors, or foremen must conduct meetings at least once a week for the trade workers. Document meeting minutes to include the date, persons in attendance, subjects discussed, and names of individual(s) who conducted the meeting. Maintain documentation on-site and furnish copies to the Contracting Officer on request. Notify the Contracting Officer of all scheduled meetings 7 calendar days in advance.

1.7.2 Roles and Responsibilities of Prime Contractor and SSHO

The Prime Contractor and SSHO must ensure that the requirements of all applicable OSHA and EM 385-1-1 are met for the project. The Prime Contractor must ensure an SSHO or an equally qualified Alternate SSHO(s) is at the worksite at all times to implement and administer the Contractor's safety program and Government accepted Accident Prevention Plan. "Worksite" is defined as the physical location of construction activities. If the required SSHO has to temporarily (that is, up to 24 hours / 1 day) leave the site of work due to unforeseen or emergency situations, a Level One, Two, or Three SSHO may be used in the interim and must be on the site of work at all times when work is being performed.

If the SSHO must be off-site for a period longer than 24 hours / 1 day, a qualified alternate that meets the contract requirements must be onsite.

a. Prime contractor must ensure all SSHOs:

(1) Are designated on an ENG Form 6282.

(2) Meet minimum training and experience requirements identified in EM 385-1-1.

(3) Execute roles and responsibilities identified in EM 385-1-1.

1.7.3 Contract Site Safety and Health Officer(s)(SSHOs) Minimum Requirements for Projects with Limited Scope.

Provide a minimum of one Level Two SSHO that meets the requirements of EM 385-1-1 for this project.

The SSHO may also serve as the Quality Control Manager. The SSHO may also serve as the Superintendent.

1.7.4 Preconstruction Conference

a. Contractor representatives who have a responsibility or significant role in accident prevention on the project must attend the preconstruction conference. This includes the project superintendent, Site Safety and Occupational Health Officer, quality control manager, or any other assigned safety and health professionals who participated in the development of the APP (including the Activity Hazard Analyses (AHAs) and special plans, program and procedures associated with it).

b. Discuss the details of the submitted APP to include incorporated plans, programs, procedures and a listing of anticipated AHAs that will be developed and implemented during the performance of the Contract. This list of proposed AHAs will be reviewed and an agreement will be reached between the Contractor and the Contracting Officer as to which phases will require an analysis. In addition, establish a schedule for the preparation, submittal, and Government review of AHAs to preclude project delays. The creation of the APP and Schedule will be created after being given Notice to Proceed.

c. Deficiencies in the submitted APP, identified during the Contracting Officer's review, must be corrected, and the APP re-submitted for review prior to the start of construction. Work is not permitted to begin until an APP is established that is acceptable to the Contracting Officer.

1.8 ACCIDENT PREVENTION PLAN (APP)

1.8.1 Accident Prevention Plan (APP)

Submit the Accident Prevention Plan (APP) for review and acceptance by the Government at least 15 calendar days prior to the start, after being given Notice to Proceed. A competent person must prepare the written site-specific APP. Prepare the APP in accordance with the format and requirements of EM 385-1-1, ENG Form 6293, and herein. The APP must be job-specific and address any unusual or unique aspects of the project or activity for which it is written. The APP must interface with the Contractor's overall safety and occupational health program referenced in the APP in the applicable APP element, and made site-specific. Describe the methods to evaluate past safety performance of potential subcontractors in the selection process. Also, describe innovative methods used to ensure and monitor safe work practices of subcontractors. The Government considers the Prime Contractor to be the "controlling employer" for all worksite safety and health of the subcontractors. Contractors are responsible for informing their subcontractors of the safety provisions under the terms of the Contract and the penalties for noncompliance, coordinating the work to prevent one craft from interfering with or creating hazardous working conditions for other crafts, and inspecting subcontractor operations to ensure that accident prevention responsibilities are being carried out. The APP must be signed in accordance with the APP and ENG Form 6293 Accident Prevention Plan Worksheet. The SSHO must provide and maintain the APP and a log of signatures by each subcontractor foreman, attesting that they have read and understand the APP, and make the APP and log available on-site to the Contracting Officer. If English is not the foreman's primary language, the Prime Contractor must provide an interpreter.

Submit the APP to the Contracting Officer within 30 calendar days of Contract award and not less than 10 calendar days prior to the date of the

preconstruction conference for acceptance. Work cannot proceed without an accepted APP. Once reviewed and accepted by the Contracting Officer, the APP and attachments will be enforced as part of the Contract. Disregarding the provisions of this Contract or the accepted APP is cause for stopping of work, at the discretion of the Contracting Officer, until the matter has been rectified. Continuously review and amend the APP, as necessary, throughout the life of the Contract. Changes to the accepted APP must be made with the knowledge and concurrence of the Contracting Officer, project superintendent, SSHO and Quality Control Manager. Incorporate unusual or high-hazard activities not identified in the original APP as they are discovered. Should any severe hazard exposure (i.e., imminent danger) become evident, stop work in the area, secure the area, and develop a plan to remove the exposure and control the hazard. Notify the Contracting Officer within 24 hours of discovery. Eliminate and remove the hazard. In the interim, take all necessary action to restore and maintain safe working conditions in order to safeguard onsite personnel, visitors, the public (as defined by ANSI/ASSP A10.34), and the environment.

1.8.2 Names and Qualifications

Provide plans in accordance with the requirements outlined in EM 385-1-1, including the following:

a. Names and qualifications (resumes including education, training, experience and certifications) of site safety and health personnel designated to perform work on this project to include the designated Site Safety and Health Officer and other competent and qualified personnel to be used. Specify the duties of each position.

b. As a minimum, designate and submit qualifications of Competent Persons (CP) for each of the following major areas: excavation; scaffolding; fall protection; hazardous energy; confined space; health hazard recognition, evaluation and control of chemical, physical and biological agents; and personal protective equipment and clothing to include selection, use and maintenance. Designate and submit qualifications for additional CPs as applicable to the work performed under this Contract.

1.9 ACTIVITY HAZARD ANALYSIS (AHA)

Before beginning each activity, task or Definable Feature of Work (DFOW) involving a type of work presenting hazards not experienced in previous project operations, or where a new work crew or subcontractor is to perform the work, the Contractor(s) performing that work activity must prepare an AHA. AHAs must be developed by the Prime Contractor, subcontractor, or supplier performing the work, and provided for Prime Contractor review and approval before submitting to the Contracting Officer. AHAs must be signed by the SSHO, Superintendent, QC Manager and the subcontractor Foreman performing the work. Format the AHA in accordance with EM 385-1-1 or as directed by the Contracting Officer. Submit the AHA for review at least 15 working days prior to the start of each activity task, or DFOW. The Government reserves the right to require the Contractor to revise and resubmit the AHA if it fails to effectively identify the work sequences, specific anticipated hazards, site conditions, equipment, materials, personnel and the control measures to be implemented.

AHAs must identify competent persons required for phases involving high

risk activities, including confined entry, crane and rigging, excavations, trenching, electrical work, fall protection, and scaffolding.

1.9.1 AHA Management

Review the AHA list periodically (at least monthly) at the Contractor supervisory safety meeting, and update as necessary when procedures, scheduling, or hazards change. Use the AHA during daily inspections by the SSHO to ensure the implementation and effectiveness of the required safety and health controls for that work activity.

1.9.2 AHA Signature Log

Each employee performing work as part of an activity, task or DFOW must review the AHA for that work and sign a signature log specifically maintained for that AHA prior to starting work on that activity. The SSHO must maintain a signature log on site for every AHA. Provide employees whose primary language is other than English, with an interpreter to ensure a clear understanding of the AHA and its contents.

1.10 SITE SAFETY REFERENCE MATERIALS

Maintain safety-related references applicable to the project, including those listed in paragraph REFERENCES. Maintain applicable equipment manufacturer's manuals.

1.11 EMERGENCY MEDICAL TREATMENT

Contractors must arrange for their own emergency medical treatment in accordance with EM 385-1-1. The Government has no responsibility to provide emergency medical treatment.

1.12 NOTIFICATIONS AND REPORTS

1.12.1 Accident Notification

Notify the Contracting Officer in accordance with the EM 385-1-1 Accident Reporting Timeline.

Table
Accident Reporting Required Timeline

Accident Type	Notify Contracting Officer	Complete Final Accident Report on ENG 3394 and provide to Contracting Officer
Fatality, in-patient hospitalization, amputation, eye loss, or property damage over $600,000.	Immediately, no later than (NLT) 8 Hours	Within 7 Days
All other accidents and near misses	Immediately, no later than (NLT) 24 Hours	Within 7 Days

Within notification include Contractor name; Contract title; type of Contract; name of activity, installation or location where accident

occurred; date and time of accident; names of personnel injured; extent of property damage, if any; extent of injury, if known, and brief description of accident (for example, type of construction equipment used and PPE used). Preserve the conditions and evidence on the accident site until the Government investigation team arrives on-site and Government investigation is conducted. Assist and cooperate fully with the Government's investigation(s) of any accident or near miss.

1.12.2 Accident Reports

a. Conduct an accident investigation for recordable injuries and illnesses, property damage, and near misses as defined in EM 385-1-1, to establish the root cause(s) of the accident. All accidents are reportable, regardless of whether or not it is recordable. Complete the applicable USACE Accident Report, ENG Form 3394, and provide the report to the Contracting Officer within 7 calendar days of the accident. The Contracting Officer will provide copies of any required or special forms. All accidents are reportable, regardless of whether or not it is recordable.

b. Near Misses: For Army projects, report all "Near Misses" to the Contracting Officer, using local accident reporting procedures, within 24 hours. The Contracting Officer will provide the Contractor the required forms. Near miss reports are considered positive and proactive Contractor safety management actions.

1.13 SEVERE STORM PLAN

In the event of a severe storm warning, the Contractor must comply with the applicable Storm Plan and:

a. Secure outside equipment and materials and place materials that could be damaged in protected areas.

b. Check surrounding area, including roof, for loose material, equipment, debris, and other objects that could be blown away or against existing facilities.

c. Ensure that temporary erosion controls are adequate.

PART 2 PRODUCTS

Not Used

PART 3 EXECUTION

3.1 CONSTRUCTION AND OTHER WORK

Comply with EM 385-1-1, NFPA 70, NFPA 70E, NFPA 241, the APP, the AHA, Federal and State OSHA regulations, and other related submittals and activity fire and safety regulations. The most stringent standard prevails.

PPE is governed in all areas by the nature of the work the employee is performing. Use personal hearing protection at all times in designated noise hazardous areas or when performing noise hazardous tasks. Safety glasses must be worn or carried/available on each person. Mandatory PPE includes:

a. Head Protection that meets ANSI/ISEA Z89.1

b. Long Pants

c. Appropriate Safety Footwear

d. Appropriate Class Reflective Vests

3.1.1 Worksite Communication

Employees working alone in a remote location or away from other workers must be provided an effective means of emergency communications (i.e., cellular phone, two-way radios, land-line telephones or other acceptable means). The selected communication must be readily available (easily within the immediate reach) of the employee and must be tested prior to the start of work to verify that it effectively operates in the area/environment. Develop an employee check-in/check-out communication procedure to ensure employee safety.

3.1.2 Hazardous Material Exclusions

Notwithstanding any other hazardous material used in this Contract, radioactive materials or instruments capable of producing ionizing/non-ionizing radiation (with the exception of radioactive material and devices used in accordance with EM 385-1-1 such as nuclear density meters for compaction testing and laboratory equipment with radioactive sources) as well as materials which contain asbestos, mercury or polychlorinated biphenyls, di-isocyanates, lead-based paint, and hexavalent chromium, are prohibited. The Contracting Officer, upon written request by the Contractor, may consider exceptions to the use of any of the above excluded materials. Low mercury lamps used within fluorescent lighting fixtures are allowed as an exception without further Contracting Officer approval. Notify the Radiation Safety Officer (RSO) prior to excepted items of radioactive material and devices being brought on base.

3.1.3 Unforeseen Hazardous Material

Contract documents identify materials such as PCB, lead paint, and friable and non-friable asbestos and other OSHA regulated chemicals (i.e., 29 CFR Part 1910.1000). If material(s) that may be hazardous to human health upon disturbance are encountered during demolition, repair, renovation, or construction operations. Stop that portion of work and notify the Contracting Officer immediately. Within 14 calendar days the Government will determine if the material is hazardous. If material is not hazardous or poses no danger, the Government will direct the Contractor to proceed without change. If material is hazardous and handling of the material is necessary to accomplish the work, the Government will issue a modification.

3.2 EQUIPMENT

3.2.1 Use of Explosives

Explosives must not be used or brought to the project site without prior written approval from the Contracting Officer. Such approval does not relieve the Contractor of responsibility for injury to persons or for damage to property due to blasting operations.

Storage of explosives, when permitted on Government property, must be only

where directed and in approved storage facilities. These facilities must be kept locked at all times except for inspection, delivery, and withdrawal of explosives.

3.3 ELECTRICAL

Perform electrical work in accordance with EM 385-1-1.

3.3.1 Electrical Work

As described in EM 385-1-1, electrical work is to be conducted in a de-energized state unless there is no alternative method for accomplishing the work. In those cases obtain an energized work permit from the Contracting Officer. The energized work permit application must be accompanied by the AHA and a summary of why the equipment/circuit needs to be worked energized. Underground electrical spaces must be certified safe for entry before entering to conduct work. Cables that will be cut must be positively identified and de-energized prior to performing each cut. Attach temporary grounds in accordance with ASTM F855 and IEEE 1048. Perform all high voltage cable cutting remotely using hydraulic cutting tool. When racking in or live switching of circuit breakers, no additional person other than the switch operator is allowed in the space during the actual operation. Plan so that work near energized parts is minimized to the fullest extent possible. Use of electrical outages clear of any energized electrical sources is the preferred method.

When working in energized substations, only qualified electrical workers are permitted to enter. When work requires work near energized circuits as defined by NFPA 70, high voltage personnel must use personal protective equipment that includes, as a minimum, electrical hard hat, safety footwear, insulating gloves and electrical arc flash protection for personnel as required by NFPA 70E. Insulating blankets, hearing protection, and switching suits may also be required, depending on the specific job and as delineated in the Contractor's AHA. Ensure that each employee is familiar with and complies with these procedures and 29 CFR 1910. Provide at least one week of notice to the Contracting Officer between Monday and Thursday before starting any electrical work.

3.3.2 Qualifications

Electrical work must be performed by QP with verifiable credentials who are familiar with applicable code requirements. Verifiable credentials consist of State, National and Local Certifications or Licenses that a Master or Journeyman Electrician may hold, depending on work being performed, and must be identified in the appropriate AHA. Journeyman/Apprentice ratio must be in accordance with State, Local requirements applicable to where work is being performed.

3.3.3 Arc Flash

Conduct a hazard analysis/arc flash hazard analysis whenever work on or near energized parts greater than 50 volts is necessary, in accordance with NFPA 70E.

All personnel entering the identified arc flash protection boundary must be QPs and properly trained in NFPA 70E requirements and procedures. Unless permitted by NFPA 70E, no Unqualified Person is permitted to approach nearer than the Limited Approach Boundary of energized conductors and circuit parts. Training must be administered by an electrically

qualified source and documented.

3.3.4 Grounding

Ground electrical circuits, equipment and enclosures in accordance with NFPA 70 and IEEE C2 to provide a permanent, continuous and effective path to ground unless otherwise noted by EM 385-1-1.

3.3.5 Testing

Temporary electrical distribution systems and devices must be inspected, tested and found acceptable for Ground-Fault Circuit Interrupter (GFCI) protection, polarity, ground continuity, and ground resistance before initial use, before use after modification and at least monthly. Monthly inspections and tests must be maintained for each temporary electrical distribution system and signed by the electrical CP or QP.

-- End of Section --

This page was intentionally left blank for duplex printing.

SECTION TABLE OF CONTENTS

DIVISION 01 - GENERAL REQUIREMENTS

SECTION 01 42 00

SOURCES FOR REFERENCE PUBLICATIONS

PART 1 GENERAL

1.1 REFERENCES
1.2 ORDERING INFORMATION

PART 2 PRODUCTS

PART 3 EXECUTION

-- End of Section Table of Contents --

SECTION 01 42 00

SOURCES FOR REFERENCE PUBLICATIONS

PART 1 GENERAL

1.1 REFERENCES

Various publications are referenced in other sections of the specifications to establish requirements for the work. These references are identified in each section by document number, date and title. The document number used in the citation is the number assigned by the standards producing organization (e.g., ASTM B564 Standard Specification for Nickel Alloy Forgings). However, when the standards producing organization has not assigned a number to a document, an identifying number has been assigned for reference purposes.

1.2 ORDERING INFORMATION

The addresses of the standards publishing organizations whose documents are referenced in other sections of these specifications are listed below, and if the source of the publications is different from the address of the sponsoring organization, that information is also provided.

AMERICAN ASSOCIATION OF TEXTILE CHEMISTS AND COLORISTS (AATCC)
1 Davis Drive
P.O. Box 12215
Research Triangle Park, NC 27709-2215
Ph: 919-549-8141

E-Mail: ordering@aatcc.org
Internet: https://www.aatcc.org/

AMERICAN CONFERENCE OF GOVERNMENTAL INDUSTRIAL HYGIENISTS (ACGIH)
3640 Park 42 Drive
Cincinnati, OH 45241
Ph: 513-742-2020
Fax: 513-742-3355
Email: customerservice@acgih.org
Internet: https://www.acgih.org/

AMERICAN SOCIETY OF HEATING, REFRIGERATING AND AIR-CONDITIONING ENGINEERS (ASHRAE)
180 Technology Parkway NW
Peachtree Corners, GA 30092
Ph: 404-636-8400 or 800-527-4723
Fax: 404-321-5478
E-mail: ashrae@ashrae.org
Internet: https://www.ashrae.org/

AMERICAN SOCIETY OF SAFETY PROFESSIONALS (ASSP)
520 N. Northwest Highway
Park Ridge, IL 60068
Ph: 847-699-2929
E-mail: customerservice@assp.org
Internet: https://www.assp.org/

ASTM INTERNATIONAL (ASTM)
100 Barr Harbor Drive, P.O. Box C700
West Conshohocken, PA 19428-2959
Ph: 610-832-9500
Fax: 610-832-9555
E-mail: service@astm.org
Internet: https://www.astm.org/

BIFMA INTERNATIONAL (BIFMA)
678 Front Ave. NW, Suite 150
Grand Rapids, MI 49504-5368
Ph: 616-285-3963
E-mail: email@bifma.org
Internet: https://www.bifma.org/

CALIFORNIA DEPARTMENT OF PUBLIC HEALTH (CDPH)
PO Box 997377, MS 0500
Sacramento, CA 95899-7377
Ph: 916-558-1784
Internet: https://www.cdph.ca.gov/

CARPET AND RUG INSTITUTE (CRI)
P.O. Box 2048
Dalton, GA 30722-2048
Ph: 706-278-3176
Fax: 706-278-8835
Internet: https://carpet-rug.org/

CENTERS FOR DISEASE CONTROL AND PREVENTION (CDC)
1600 Clifton Road
Atlanta, GA 30329-4027
Ph: 800-232-4636
TTY: 888-232-6348
Internet: https://www.cdc.gov

COMPRESSED GAS ASSOCIATION (CGA)
8484 Westpark Drive Suite 220
McLean, Virginia 22102
Ph: 703-788-2700
Fax: 703-961-1831
E-mail: cga@cganet.com
Internet: https://www.cganet.com/

EUROPEAN UNION (EU)
European Commission
Rue de la Loi 200
1000 Bruxelle
Belgium
Ph: +32 2 299 96 96
Internet: https://commission.europa.eu/index_en

FM GLOBAL (FM)
270 Central Avenue
Johnston, RI 02919-4949
Ph: 401-275-3000
Fax: 401-275-3029
Internet: https://www.fmglobal.com/

GREEN SEAL (GS)
601 13th St NW 12th Floor
Washington, DC 20005
Ph: 202-872-6400
Fax: 202-872-4324
E-mail: greenseal@greenseal.org
Internet: https://www.greenseal.org/

ILLUMINATING ENGINEERING SOCIETY (IES)
120 Wall Street, Floor 17
New York, NY 10005-4001
Ph: 212-248-5000
Fax: 212-248-5018
E-mail: membership@ies.org
Internet: https://www.ies.org/

INSTITUTE OF ELECTRICAL AND ELECTRONICS ENGINEERS (IEEE)
445 and 501 Hoes Lane
Piscataway, NJ 08854-4141
Ph: 732-981-0060 or 800-701-4333
Fax: 732-981-9667
E-mail: onlinesupport@ieee.org
Internet: https://www.ieee.org/

INSULATED CABLE ENGINEERS ASSOCIATION (ICEA)
P.O. Box 493
Miamitown, OH 45041-9998
E-mail: info@icea.net
Internet: https://www.icea.net/

INTERNATIONAL ELECTRICAL TESTING ASSOCIATION (NETA)
3050 Old Centre Ave. Suite 101
Portage, MI 49024
Ph: 269-488-6382 or 1-888-300-6382
Fax: 269-488-6383
Internet: https://www.netaworld.org/

INTERNATIONAL ORGANIZATION FOR STANDARDIZATION (ISO)
ISO Central Secretariat
BIBC II
Chemin de Blandonnet 8
CP 401 - 1214 Vernier, Geneva
Switzerland
Ph: 41-22-749-01-11
E-mail: central@iso.ch
Internet: https://www.iso.org

INTERNATIONAL SAFETY EQUIPMENT ASSOCIATION (ISEA)
1101 Wilson Blvd, Suite 1425
Arlington, VA 22209-1762
Ph: 703-525-1695
Fax: 703-528-2148
Internet: https://safetyequipment.org/

MASTER PAINTERS INSTITUTE (MPI)
2800 Ingleton Avenue
Burnaby, BC CANADA V5C 6G7
Ph: 1-888-674-8937

Fax: 1-888-211-8708
E-mail: info@paintinfo.com or techservices@mpi.net
Internet: http://www.mpi.net/

NATIONAL ELECTRICAL CONTRACTORS ASSOCIATION (NECA)
1201 Pennsylvania Ave. NW, Suite 1200
Washington, DC 20004
Ph: 202-991-6300
Fax: 202-217-4171
Internet: https://www.necanet.org/

NATIONAL ELECTRICAL MANUFACTURERS ASSOCIATION (NEMA)
1300 North 17th Street, Suite 900
Arlington, VA 22209
Ph: 703-841-3200
Email: communications@nema.org
Internet: https://www.nema.org

NATIONAL FIRE PROTECTION ASSOCIATION (NFPA)
1 Batterymarch Park
Quincy, MA 02169-7471
Ph: 800-344-3555
Fax: 800-593-6372
Internet: https://www.nfpa.org

NATIONAL INSTITUTE FOR OCCUPATIONAL SAFETY AND HEALTH (NIOSH)
Patriots Plaza 1
395 E Street, SW, Suite 9200
Washington, DC 20201
Ph: 800-232-4636
Fax: 513-533-8347
Internet: https://www.cdc.gov/niosh/

SCIENTIFIC CERTIFICATION SYSTEMS (SCS)
2000 Powell Street, Suite 600
Emeryville, CA 94608
Ph: 510-452-8000
Fax: 510-452-8001
E-mail: info@SCSglobalservices.com
Internet: https://www.scsglobalservices.com/

SOCIETY FOR PROTECTIVE COATINGS (SSPC)
800 Trumbull Drive
Pittsburgh, PA 15205
Ph: 877-281-7772 or 412-281-2331
Fax: 412-444-3591
E-mail: customerservice@sspc.org
Internet: http://www.sspc.org

SOUTH COAST AIR QUALITY MANAGEMENT DISTRICT (SCAQMD)
21865 Copley Drive
Diamond Bar, CA 91765
Ph: 909-396-2000
E-mail: webinquiry@aqmd.gov
Internet: http://www.aqmd.gov

STATE OF CALIFORNIA BUREAU OF HOUSEHOLD GOODS AND SERVICES (BHGS)
4244 South Market Court, Suite D

Sacramento, CA 95834-1243
Ph: 916-999-2041
Fax: 916-921-7279
E-mail: HomeProducts@dca.ca.gov
Internet: https://bhgs.dca.ca.gov/

TELECOMMUNICATIONS INDUSTRY ASSOCIATION (TIA)
1320 North Courthouse Rosd, Suite 200
Arlington, VA 22201
Ph: 703-907-7700
Fax: 703-907-7727
E-mail: marketing@tiaonline.org
Internet: https://www.tiaonline.org/

U.S. ARMY CORPS OF ENGINEERS (USACE)
CRD-C DOCUMENTS available on Internet: https://www.wbdg.org/army
THE CAD/BIM TECHNOLOGY CENTER FOR FACILITIES, INFRASTRUCTURE, AND ENVIRONMENT (USACE)on Internet:
https://cadbimcenter.erdc.dren.mil/
Order Other Documents from:
Official Publications of the Headquarters, USACE
E-mail: hqpublications@usace.army.mil
Internet: http://www.publications.usace.army.mil/
or
https://www.hnc.usace.army.mil/Missions/Engineering-Directorate/TECHINFO/

U.S. DEPARTMENT OF DEFENSE (DOD)
Order DOD Documents from:
Room 3A750-The Pentagon
1400 Defense Pentagon
Washington, DC 20301-1400
Ph: 703-571-3343
Fax: 215-697-1462
E-mail: customerservice@ntis.gov
Internet: https://www.ntis.gov/
Obtain Military Specifications, Standards and Related Publications from:
Acquisition Streamlining and Standardization Information System (ASSIST)
Department of Defense Single Stock Point (DODSSP)
Document Automation and Production Service (DAPS)
Building 4/D
700 Robbins Avenue
Philadelphia, PA 19111-5094
Ph: 215-697-6396 - for account/password issues
Internet: https://assist.dla.mil/online/start/; account registration required
Obtain Unified Facilities Criteria (UFC) from:
Whole Building Design Guide (WBDG)
National Institute of Building Sciences (NIBS)
1090 Vermont Avenue NW, Suite 700
Washington, DC 20005
Ph: 202-289-7800
Fax: 202-289-1092
Internet:
https://www.wbdg.org/ffc/dod/unified-facilities-criteria-ufc

U.S. DEPARTMENT OF ENERGY (DOE)
1000 Independence Avenue Southwest

Washington, D.C. 20585
Ph: 202-586-5000
Fax: 202-586-4403
E-mail: The.Secretary@hq.doe.gov
Internet: https://www.energy.gov/

U.S. ENVIRONMENTAL PROTECTION AGENCY (EPA)
1200 Pennsylvania Avenue, N.W.
Washington, DC 20004
Ph: 202-564-4700
Internet: https://www.epa.gov
--- Some EPA documents are available only from:
National Technical Information Service (NTIS)
5301 Shawnee Road
Alexandria, VA 22312
Ph: 703-605-6060 or 1-800-363-2068
Fax: 703-605-6880
TDD: 703-487-4639
E-mail: info@ntis.gov
Internet: https://www.ntis.gov/

U.S. FEDERAL COMMUNICATIONS COMMISSION (FCC)
445 12th Street SW
Washington, DC 20554
Ph: 888-225-5322
TTY: 888-835-5322
Fax: 866-418-0232
Internet: https://www.fcc.gov/
Order Publications From:
Superintendent of Documents
U.S. Government Publishing Office (GPO)
732 N. Capitol Street, NW
Washington, DC 20401
Ph: 202-512-1800 or 866-512-1800
Bookstore: 202-512-0132
Internet: https://www.gpo.gov/

U.S. GENERAL SERVICES ADMINISTRATION (GSA)
General Services Administration
1800 F Street, NW
Washington, DC 20405
Ph: 1-844-472-4111
Internet: https://www.gsaelibrary.gsa.gov/ElibMain/home.do
Obtain documents from:
Acquisition Streamlining and Standardization Information System (ASSIST)
Internet: https://assist.dla.mil/online/start/; account registration required

U.S. NATIONAL ARCHIVES AND RECORDS ADMINISTRATION (NARA)
8601 Adelphi Road
College Park, MD 20740-6001
Ph: 866-272-6272
Internet: https://www.archives.gov/
Order documents from:
Superintendent of Documents
U.S. Government Publishing Office (GPO)
732 N. Capitol Street, NW
Washington, DC 20401

Ph: 202-512-1800 or 866-512-1800
Bookstore: 202-512-0132
Internet: https://www.gpo.gov/

U.S. NAVAL FACILITIES ENGINEERING SYSTEMS COMMAND (NAVFAC)
1322 Patterson Ave. SE, Suite 1000
Washington Navy Yard, DC 20374-5065
Ph: 202-685-9387
Internet: http://www.navfac.navy.mil

UL SOLUTIONS (UL)
333 Pfingsten Road
Northbrook, IL 60062
Ph: 877-854-3577 or 360-817-5500
E-mail: CustomerExperienceCenter@ul.com
Internet: https://www.ul.com/
UL Directories available through IHS at https://accuristech.com/

PART 2 PRODUCTS

Not used

PART 3 EXECUTION

Not used

-- End of Section --

SECTION TABLE OF CONTENTS

DIVISION 01 - GENERAL REQUIREMENTS

SECTION 01 45 00

QUALITY CONTROL

PART 1 GENERAL

1.1 REFERENCES
1.2 PAYMENT
1.3 SUBMITTALS
1.4 GENERAL REQUIREMENTS
1.5 QUALITY CONTROL (QC) PROGRAM REQUIREMENTS
1.5.1 Meetings
1.5.1.1 Quality Control Plan Meeting
1.5.1.2 Coordination and Mutual Understanding Meeting
1.5.1.2.1 Purpose
1.5.1.2.2 Coordination of Activities
1.5.1.2.3 Attendees
1.5.1.3 Quality Control (QC) Meetings
1.5.2 Contractor Quality Control (CQC) Plan
1.5.2.1 Content of Contractor Quality Control (CQC) Plan
1.5.3 Acceptance of the Quality Control (QC) Plan
1.5.4 Notification of Changes
1.6 QUALITY CONTROL (QC) ORGANIZATION
1.6.1 Personnel Requirements
1.6.2 Quality Control (QC) Manager
1.6.2.1 Duties
1.6.2.2 Qualifications
1.6.2.3 Construction Quality Management Training
1.6.3 Organizational Changes
1.6.4 Alternate Quality Control (QC) Manager Duties and Qualifications
1.7 SUBMITTAL AND DELIVERABLES REVIEW AND APPROVAL
1.8 THREE PHASES OF CONTROL
1.8.1 Preparatory Phase
1.8.2 Initial Phase
1.8.3 Follow-Up Phase
1.8.4 Additional Preparatory and Initial Phases
1.8.5 Notification of Three Phases of Control for Off-Site Work
1.8.6 Deficiency/Rework Items List
1.9 TESTING
1.9.1 Laboratory Accreditation Authorities
1.9.2 Capability Check
1.9.2.1 Capability Recheck
1.9.2.2 Onsite Laboratory
1.9.3 Test Results
1.10 COMPLETION INSPECTIONS
1.10.1 Punch-Out Inspection
1.10.2 Pre-Final Inspection
1.10.3 Final Acceptance Inspection
1.11 QUALITY CONTROL (QC) CERTIFICATIONS

1.11.1 Contractor Quality Control (CQC) Report Certification
1.11.2 Completion Certification
1.12 DOCUMENTATION AND INFORMATION FOR THE CONTRACTING OFFICER
1.12.1 Construction Documentation
1.12.2 Quality Control Activities
1.12.3 Verification Statement
1.12.4 Quality Control Validation
1.12.5 Testing Plan and Log
1.12.6 As-Built Drawings
1.13 NOTIFICATION ON NON-COMPLIANCE
1.14 DELIVERY, STORAGE, AND HANDLING

PART 2 PRODUCTS

PART 3 EXECUTION

-- End of Section Table of Contents --

SECTION 01 45 00

QUALITY CONTROL

PART 1 GENERAL

1.1 REFERENCES

The publications listed below form a part of this specification to the extent referenced. The publications are referred to in the text by the basic designation only.

ASTM INTERNATIONAL (ASTM)

ASTM D3740	(2019) Minimum Requirements for Agencies Engaged in the Testing and/or Inspection of Soil and Rock as Used in Engineering Design and Construction
ASTM E329	(2023) Standard Specification for Agencies Engaged in Construction Inspection, Testing, or Special Inspection

U.S. ARMY CORPS OF ENGINEERS (USACE)

EM 385-1-1	(2024) Safety -- Safety and Occupational Health (SOH) Requirements

1.2 PAYMENT

Separate payment will not be made for providing and maintaining an effective Quality Control program. Include all associated costs in the applicable Pricing Schedule item.

1.3 SUBMITTALS

Government approval is required for submittals with a "G" classification. Submittals not having a "G" classification are for information only. When used, a code following the "G" classification identifies the office that will review the submittal for the Government. Submit the following in accordance with Section 01 33 00 SUBMITTAL PROCEDURES.

SD-01 Preconstruction Submittals

Contractor Quality Control (CQC) Plan; G, AO

SD-06 Test Reports

Verification Statement

1.4 GENERAL REQUIREMENTS

Establish and maintain an effective quality control (QC) system that complies with FAR 52.246-12 Inspection of Construction. QC is comprised of plans, procedures, and organization necessary to produce an end product that complies with the Contract requirements. The QC system covers all construction operations, both onsite and offsite, and must be keyed to the proposed construction sequence. The Quality Control Manager, Superintendent, Site Safety and Health Officer (SSHO), and all on-site supervisors are responsible for the quality of work and are subject to removal by the Contracting Officer for non-compliance with the quality requirements specified in the Contract. The Quality Control Manager must maintain a physical presence at the work site at all times and is the primary individual responsible for all quality control. "Work site" is defined as the physical location of construction activities.

1.5 QUALITY CONTROL (QC) PROGRAM REQUIREMENTS

Establish and maintain a QC program as described in this section. The QC program consists of a QC Organization, QC Plan, QC Plan Meeting(s), a Coordination and Mutual Understanding Meeting, QC meetings, three phases of control, submittal review and approval, testing, completion inspections, QC certifications, and documentation necessary to provide materials, equipment, workmanship, fabrication, construction and operations that comply with the requirements of this Contract. The QC program must cover on-site and off-site work and be keyed to the work sequence. No construction work or testing may be performed unless the QC Manager is on the work site. The QC Manager must report to an officer of the firm and not be subordinate to the Project Superintendent or the Project Manager. The QC Manager, Project Superintendent and Project Manager must work together effectively. Although the QC Manager is the primary individual responsible for quality control, all individuals will be held responsible for the quality of work on the job.

1.5.1 Meetings

1.5.1.1 Quality Control Plan Meeting

Prior to submission of the QC Plan, the Contractor may request a meeting with the Contracting Officer to discuss the QC Plan requirements of this Contract.

The purpose of this meeting is to develop a mutual understanding of the QC Plan requirements prior to plan development and submission and to agree on the Contractor's list of Definable Feature of Work (DFOW).

1.5.1.2 Coordination and Mutual Understanding Meeting

After the Preconstruction Conference, before start of construction, and prior to acceptance by the Government of the CQC Plan, meet with the Contracting Officer and discuss the Contractor's quality control system. During the meeting, a mutual understanding of the system details must be developed, including the forms for recording the CQC operations, control activities, testing, administration of the system for both onsite and offsite work, and the interrelationship of Contractor's Management and control with the Government's Quality Assurance. Minutes of the meeting

will be prepared by the QC Manager and signed by the Contractor and the Government. Provide a copy of the signed minutes to all attendees and include in the QC Plan. At a minimum the Coordination and Mutual Understanding Meeting must be repeated when a new QC Manager is appointed. There can be other occasions when subsequent conferences will be called by either party to reconfirm mutual understandings or address deficiencies in the CQC system or procedures which can require corrective action by the Contractor.

1.5.1.2.1 Purpose

The purpose of this meeting is to develop a mutual understanding of the QC details, including documentation, administration for on-site and off-site work, design intent, environmental requirements and procedures, coordination of activities to be performed, and the coordination of the Contractor's management, production, and QC personnel. At the meeting, the Contractor must explain in detail how three phases of control will be implemented for each DFOW, as well as how each DFOW will be affected by each management plan or requirement as listed below:

a. Waste Management Plan.

b. Procedures for noise and acoustics management.

c. Environmental Protection Plan.

d. Environmental regulatory requirements.

1.5.1.2.2 Coordination of Activities

Coordinate activities included in various sections to assure efficient and orderly installation of each component. Coordinate operations included under different sections that are dependent on each other for proper installation and operation.

1.5.1.2.3 Attendees

As a minimum, the Contractor's personnel required to attend include an officer of the firm, the Project Manager, Project Superintendent, QC Manager, Alternate QC Manager, Environmental Manager, and subcontractor representatives. Each subcontractor who will be assigned QC responsibilities must have a principal of the firm at the meeting.

1.5.1.3 Quality Control (QC) Meetings

After the start of construction, conduct weekly QC meetings led by the QC Manager at the work site with the Project Superintendent, and the other personnel as necessary. The QC Manager is to prepare the minutes of the meeting and provide a copy to the Contracting Officer within two working days after the meeting. The Contracting Officer may attend these meetings. As a minimum, accomplish the following at each meeting:

a. Review the minutes of the previous meeting.

b. Review the schedule and the status of work and deficiencies/rework. Review the most current approved schedule (in accordance with schedule specification) and the status of work and deficiencies/rework.

c. Review the status of submittals and Request For Information (RFIs).

d. Review the work to be accomplished in the next three weeks and all quality control documentation required for that work.

e. Review Testing Plan and Log including status of tests performed since last QC Meeting.

f. Resolve QC and production problems. Discuss status of pending change orders.

g. Address items that may require revising the QC Plan.

h. Review Accident Prevention Plan (APP) and effectiveness of the safety program.

i. Review environmental requirements and procedures.

j. Review Environmental Management Plan.

k. Review Waste Management Plan.

l. Review the status of training completion.

1.5.2 Contractor Quality Control (CQC) Plan

Submit no later than 30 calendar days after receipt of notice to proceed, the CQC Plan proposed to implement the requirements FAR 52.246-12 Inspection of Construction. The Government will consider an interim plan for the first 30 calendar days of operation. Construction will be permitted to begin only after acceptance of the CQC Plan and other Contract requirements or acceptance of an interim plan applicable to the particular feature of work to be started. Work outside of the accepted interim plan will not be permitted to begin until acceptance of a CQC Plan or another interim plan containing the additional work.

1.5.2.1 Content of Contractor Quality Control (CQC) Plan

Provide a CQC Plan, prior to start of construction that includes a table of contents, with major sections identified, pages numbered sequentially, and that documents the proposed methods and responsibilities for accomplishing quality control during the construction of the project. The CQC Plan must at a minimum include the following sections:

a. A description of the quality control organization and acknowledgment that the CQC staff will implement the three phase control system for all aspects of the work specified. Include a CQC System Manager who reports to the Project Manager or another Quality Management Executive in the organization (not the Superintendent). Project Manager in this context means the individual with responsibility for the overall management of the project, including quality and production.

b. An organizational chart showing the quality control organization with individual names and job titles and lines of authority up to an executive of the company at the home office.

c. NAMES AND QUALIFICATIONS: Names and qualifications, in resume format, (including position titles and durations for qualifying experiences)

for each person in the QC organization. Include the Construction Quality Management (CQM) for Contractors course certifications for the QC personnel as required by the paragraph CONSTRUCTION QUALITY MANAGEMENT TRAINING.

d. DUTIES, RESPONSIBILITY AND AUTHORITY OF QC PERSONNEL: Duties, responsibilities, and authorities of each person in the QC organization.

e. OUTSIDE ORGANIZATIONS: A listing of outside organizations, such as architectural and consulting engineering firms, that will be employed by the Contractor and a description of the services these firms will provide.

f. APPOINTMENT LETTERS: Letters signed by an officer of the firm appointing the QC Manager and Alternate QC Manager, and stating that they are responsible for implementing and managing the QC program as described in this Contract. Include in this letter the responsibility of the QC Manager and Alternate QC Manager to implement and manage the three phases of control, and their authority to stop work that is not in compliance with the Contract. Letters of direction are to be issued by the QC Manager to all other QC Specialists or quality control representatives outlining their duties, authorities, and responsibilities. Include copies of the letters in the QC Plan.

g. SUBMITTAL PROCEDURES AND INITIAL SUBMITTAL REGISTER: Procedures for reviewing, approving, scheduling, and managing submittals, including those of subcontractors, offsite fabricators, suppliers, and purchasing agents. Provide the name(s) of the person(s) in the QC organization authorized to review and certify submittals prior to approval. Provide the initial submittal of the Submittal Register as specified in Section 01 33 00 SUBMITTAL PROCEDURES.

h. TESTING LABORATORY INFORMATION: Testing laboratory information required by the paragraph ACCREDITATION REQUIREMENTS, as applicable.

i. TESTING PLAN AND LOG: A Testing Plan and Log that includes the tests required, associated feature of work required, referenced by the specification paragraph number requiring the test, the frequency, and the person responsible for each test.

j. Procedures to complete construction deficiencies from identification through acceptable corrective action. Establish verification procedures that identified deficiencies have been corrected. This phase is performed prior to beginning work on each definable feature of work, after all required plans, documents, materials are approved, and after copies are at the work site.

k. Reporting procedures, including proposed reporting formats.

l. Procedures for submitting and reviewing design changes/variations prior to submission to the Contracting Officer.

m. LIST OF DEFINABLE FEATURES: A Definable Feature of Work (DFOW) is a task that is separate and distinct from other tasks and has control requirements and work crews unique to that task. A DFOW is identified by different trades or disciplines, or it is work by the same trade in a different environment. A DFOW is by definition any item or activity on the construction schedule, and the schedule specification provides

direction regarding how the DFOWs are to be structured. Include in the list of DFOWs for all activities on the Construction Schedule. Although each section of the specifications can generally be considered as a definable feature of work, there are frequently more than one definable features under a particular section. Identify the specification section number and schedule activity ID for each DFOW listed. The DFOW list will be reviewed in coordination with the construction schedule and agreed upon during the Coordination of Mutual Understanding Meeting.

n. PROCEDURES FOR PERFORMING AND TRACKING THE THREE PHASES OF CONTROL: Identify procedures used to ensure the three phases of control to manage the quality on this project. For each Definable Feature of Work (DFOW), a Preparatory and Initial phase checklist will be filled out during the Preparatory and Initial phase meetings. Conduct the Preparatory and Initial Phases and meetings with a view towards obtaining quality construction by planning ahead and identifying potential problems for each DFOW.

1.5.3 Acceptance of the Quality Control (QC) Plan

The Contracting Officer's acceptance of the Contractor QC Plan, or interim plan applicable to the particular feature of work to be started, is required prior to the start of construction. The Government will consider an interim plan for the first 30 calendar days of operation. Work outside of the accepted interim plan will not be permitted to begin until acceptance of a CQC Plan or another interim plan containing the additional work. The Contracting Officer reserves the right to require changes in the QC Plan and operations as necessary, including removal or addition of personnel, to ensure the specified quality of work. The Contracting Officer reserves the right to interview any member of the QC organization at any time to verify the submitted qualifications. All QC organization personnel are subject to acceptance by the Contracting Officer. The Contracting Officer may require the removal of any individual for non-compliance with quality requirements specified in the Contract.

1.5.4 Notification of Changes

Notify the Contracting Officer, in writing, of any proposed changes in the QC Plan or changes to the QC organization personnel. Proposed changes are subject to acceptance by the Contracting Officer.

1.6 QUALITY CONTROL (QC) ORGANIZATION

1.6.1 Personnel Requirements

The requirements for the CQC organization are a Site Safety and Health Officer (SSHO), QC Manager, and enough qualified personnel to ensure safety and Contract compliance. The SSHO reports directly to a senior project (or corporate) official independent from the QC Manager. The SSHO will also serve as a member of the CQC Staff Personnel identified in the technical provisions as requiring specialized skills to assure the required work is being performed properly. The CQC staff always maintains a presence at the site during progress of the work and have complete authority and responsibility to take any action necessary to ensure Contract compliance. The CQC staff will be subject to acceptance by the Contracting Officer. Provide adequate office space, filing systems and other resources as necessary to maintain an effective and fully functional CQC organization. Promptly complete and furnish all letters, material

submittals, shop drawing submittals, schedules, and all other project documentation to the CQC organization. The CQC organization is responsible for always maintaining these documents and records at the site, except as otherwise acceptable to the Contracting Officer.

1.6.2 Quality Control (QC) Manager

1.6.2.1 Duties

Provide a QC Manager at the work site to implement and manage the QC program. The QC Manager must be employed by the Prime Contractor. In addition to implementing and managing the QC program, the QC Manager may perform the duties of Project Superintendent. The QC Manager must attend the Coordination and Mutual Understanding Meeting, perform the three phases of control, perform submittal review and approval, ensure testing is performed and provide QC certifications and documentation required in this Contract. The QC Manager is responsible for managing and coordinating the three phases of control and documentation performed by testing laboratory personnel and any other inspection and testing personnel required by this Contract. The QC Manager is the manager of all QC activities.

1.6.2.2 Qualifications

The QC Manager must be an individual with a minimum of 5 years combined experience in the following positions: Project Superintendent, QC Manager, Project Manager, Project Engineer or Construction Manager on similar size and type construction Contracts which included the major trades that are part of this Contract. The individual must have at least 2 -year's experience as a QC Manager. The individual must be familiar with the requirements of EM 385-1-1 and have experience in the areas of hazard identification, safety compliance, and sustainability.

The QC Manager and all members of the QC organization must be capable of reading, writing, and conversing fluently in the English language.

1.6.2.3 Construction Quality Management Training

In addition to the above experience and education requirements, the QC Manager and all members of the QC team must have completed the CQM for Contractors course. If the QC Manager does not have a current certification, obtain the CQM for Contractors course certification within 90 days of award. This course is periodically offered by the Naval Facilities Engineering Systems Command and the Army Corps of Engineers. Contact the Contracting Officer for information on the next scheduled class.

The Construction Quality Management Training certificate expires after 5 years. If the QC Manager's certificate has expired, retake the course to remain current.

1.6.3 Organizational Changes

Maintain the QC staff with personnel as required by the specification section at all times. When it is necessary to make changes to the QC staff, revise the CQC Plan to reflect the changes and submit the changes to the Contracting Officer for acceptance.

1.6.4 Alternate Quality Control (QC) Manager Duties and Qualifications

Designate an alternate for the QC Manager at the work site to serve in the event of the designated QC Manager's absence. The qualification requirements for the Alternate QC Manager must be the same as for the QC Manager.

1.7 SUBMITTAL AND DELIVERABLES REVIEW AND APPROVAL

Procedures for submission, review and approval of submittals are described in Section 01 33 00 SUBMITTAL PROCEDURES. Procedures must include field verification of relevant dimensions and component characteristics by the QC organization prior to submittal being sent to the Contracting Officer. The CQC organization is responsible for certifying that all submittals and deliverables are in compliance with the Contract.

1.8 THREE PHASES OF CONTROL

CQC enables the Contractor to ensure that the construction, including that of subcontractors and suppliers, complies with the requirements of the Contract. At least three phases of control must be conducted by the QC Manager to adequately cover both on-site and off-site work for each definable feature of the construction work as follows:

1.8.1 Preparatory Phase

Document the results of the preparatory phase actions by separate minutes prepared by the QC Manager and attach to the daily CQC report. Instruct applicable workers as to the acceptable level of workmanship required to meet Contract specifications.

Notify the Contracting Officer at least two business days in advance of each preparatory phase meeting. The meeting will be conducted by the QC Manager and attended by the Project Superintendent,and the foreman responsible for the DFOW. When the DFOW will be accomplished by a subcontractor, that subcontractor's foreman must attend the preparatory phase meeting. This phase is performed prior to beginning work on each definable feature of work, after all required plans/documents/materials are approved/accepted, and after copies are at the work site. Perform the following prior to beginning work on each DFOW:

a. Review each paragraph of the applicable specification sections, reference codes, and standards. Make available during the preparatory inspection a copy of those sections of referenced codes and standards applicable to that portion of the work to be accomplished in the field. Maintain and make available in the field for use by Government personnel until final acceptance of the work.

b. Review the Contract drawings.

c. Verify that field measurements are as indicated on construction or shop drawings or both before confirming product orders, to minimize waste due to excessive materials.

d. Verify that appropriate shop drawings and submittals for materials and equipment have been submitted and approved. Verify receipt of approved factory test results, when required.

e. Review the testing plan and ensure that provisions have been made to

provide the required QC testing.

f. Examine the work area to ensure that the required preliminary work has been completed and complies with the Contract and ensure any deficiencies/rework items in the preliminary work have been corrected and confirmed by the Contracting Officer.

g. Review coordination of product/material delivery to designated prepared areas to execute the work.

h. Examine the required materials, equipment and sample work to ensure that they are on hand and conform to the approved shop drawings and submitted data and are properly stored.

i. Check to assure that all materials and equipment have been tested, submitted, and approved.

j. Discuss specific controls to be used, construction methods, construction tolerances, workmanship standards, and the approach that will be used to provide quality construction by planning ahead and identifying potential problems for each DFOW. Ensure any portion of the plan requiring separate Contracting Officer acceptance has been approved.

k. Review the APP and appropriate Activity Hazard Analysis (AHA) to ensure that applicable safety requirements are met, and that required Safety Data Sheets (SDS) are submitted.

l. Discussion of procedures for controlling quality of the work including repetitive deficiencies. Document construction tolerances and workmanship standards for that feature of work.

m. Discuss schedule and execution of the initial control phase and confirmation or construction quality compliance.

1.8.2 Initial Phase

Notify the Contracting Officer at least two business days in advance of each initial phase. When construction crews are ready to start work on a DFOW, conduct the initial phase with the Project Superintendent, and the foreman responsible for that DFOW. Observe the initial segment of the DFOW to ensure that the work complies with Contract requirements. Document the results of the initial phase in the Initial Phase Checklist. Repeat the initial phase for each new crew to work on-site when acceptable levels of specified quality are not being met. Indicate the exact location of initial phase for definable feature of work for future reference and comparison with follow-up phases. Perform the following for each DFOW:

a. Check work to ensure that it is in full compliance with Contract requirements. Review minutes of the preparatory meeting.

b. Verify adequacy of controls to ensure full Contract compliance. Verify required control inspection and testing comply with the Contract.

c. Establish level of workmanship and verify that it meets the minimum acceptable workmanship standards. Compare with required sample panels as appropriate.

d. Resolve any workmanship issues.

e. Ensure that testing is performed by the approved laboratory.

f. Check work procedures for compliance with the APP and the appropriate AHA to ensure that applicable safety requirements are met.

g. Review project specific work plans (i.e., HAZMAT Abatement, Stormwater Management) to ensure all preparatory work items have been completed and documented.

1.8.3 Follow-Up Phase

Perform the following for on-going DFOW daily, or more frequently as necessary, until the completion of each DFOW. The Final Follow-Up for any DFOW will clearly note in the daily report the DFOW is completed, and all deficiencies/rework items have been completed in accordance with the paragraph DEFICIENCY/REWORK ITEMS LIST. Each DFOW that has completed the Initial Phase and has not completed the Final Follow-up must be included on each daily report. If no work was performed on that DFOW for the period of that daily report, it must be so noted. Document all Follow-Up activities for DFOWs in the daily CQC Report:

a. Ensure the work including control testing complies with Contract requirements until completion of that particular work feature. Record checks in the CQC documentation.

b. Maintain the quality of workmanship required.

c. Ensure that testing is performed by the approved laboratory.

d. Ensure that deficiencies/rework items are being corrected. Conduct final follow-up checks and correct all deficiencies prior to the start of additional features of work which may be affected by the deficient work.

e. Do not build upon nor conceal non-conforming work.

f. Assure manufacturers' representatives have performed necessary inspections if required and perform safety inspections.

1.8.4 Additional Preparatory and Initial Phases

Conduct additional preparatory and initial phases on the same DFOW if the quality of on-going work is unacceptable, if there are changes in the applicable QC organization, if there are changes in the on-site production supervision or work crew, if work on a DFOW has not started within 45 days of the initial preparatory meeting or has resumed after 45 days of inactivity, or if other problems develop.

1.8.5 Notification of Three Phases of Control for Off-Site Work

Notify the Contracting Officer at least two weeks prior to the start of the preparatory and initial phases.

1.8.6 Deficiency/Rework Items List

The QC Manager must maintain a list of work that does not comply with the

Contract, identifying what items need to be corrected, the activity ID number associated with the item, the date the item was originally discovered, the date the item will be corrected by, and the date the item was corrected.

The QC Manager reviews the list at each weekly QC Meeting:

a. There is no requirement to report a deficiency/rework item that is corrected the same day it is discovered.

b. No successor task may be advanced beyond the preparatory phase meeting until all deficiencies/rework items have been cleared by the QC Manager and concurred with by the Contracting Officer. This must be confirmed as part of the Preparatory Phase activities.

c. Attach a copy of the "Deficiency/Rework Items List" to the last daily CQC Report of each month.

d. The Contractor is responsible for including those items identified by the Contracting Officer.

e. All deficiencies/rework items must be confirmed as corrected by the QC Manager, and concurred by the Contracting Officer, prior to commencement of any completion inspections per paragraph COMPLETION INSPECTIONS unless specifically exempted by the Contracting Officer.

f. Non-Compliance with these requirements is grounds for removal in accordance with paragraph ACCEPTANCE OF THE QUALITY CONTROL (QC) PLAN.

g. All delays, concurrent or related to failure to manage, monitor, control, and correct deficiencies/rework items are entirely the responsibility of the Contractor and cannot be made the subject, or any component of any request for additional time or compensation.

1.9 TESTING

Perform specified or required tests to verify that control measures are adequate to provide a product which conforms to Contract requirements. Upon request, furnish to the Government duplicate samples of test specimens for possible testing by the Government. Testing includes operation and acceptance tests when specified. Procure the services of an U.S. Army Corps of Engineers approved testing laboratory or establish an approved testing laboratory at the project site or at a nearby location as approved by the COR. Perform the following activities and record and provide the following data:

a. Verify that testing procedures comply with Contract requirements.

b. Verify that facilities and testing equipment are available and comply with testing standards.

c. Check test instrument calibration data against certified standards.

d. Verify that recording forms and test identification control number system, including all test documentation requirements, have been prepared.

e. Record results of all tests taken, both passing and failing on the CQC report for the date taken. Specification paragraph reference,

location where tests were taken, and the sequential control number identifying the test. If approved by the Contracting Officer, actual test reports are submitted later with a reference to the test number and date taken. Provide an information copy of tests performed by an offsite or commercial test facility directly to the Contracting Officer. Failure to submit timely test reports as stated results in nonpayment for related work performed and disapproval of the test facility for this Contract.

1.9.1 Laboratory Accreditation Authorities

All testing laboratories must be validated by the USACE Material Testing Center (MTC) for the tests to be performed. Information on the USACE MTC with web-links to both a list of validated testing laboratories and for the laboratory inspection request for can be found at: https://mtc.erdc.dren.mil

1.9.2 Capability Check

The Contracting Officer retains the right to check laboratory equipment in the proposed laboratory and the laboratory technician's testing procedures, techniques, and other items pertinent to testing, for compliance with the standards set forth in this Contract. Laboratories utilized for testing soils, concrete, asphalt, and steel must meet criteria detailed in ASTM D3740 and ASTM E329.

1.9.2.1 Capability Recheck

If the selected laboratory fails the capability check, the Contractor will be assessed the actual cost of the recheck to reimburse the Government for each succeeding recheck of the laboratory or the checking of a subsequently selected laboratory. Such costs will be deducted from the Contract amount due the Contractor.

1.9.2.2 Onsite Laboratory

The Government reserves the right to utilize the Contractor's control testing laboratory and equipment to make assurance tests, and to check the Contractor's testing procedures, techniques, and test results at no additional cost to the Government.

1.9.3 Test Results

Cite applicable Contract requirements, tests or analytical procedures used. Provide actual results and include a statement that the item tested or analyzed conforms or fails to conform to specified requirements. If the item fails to conform, notify the Contracting Officer immediately. Conspicuously stamp the cover sheet for each report in large red letters "CONFORMS" or "DOES NOT CONFORM" to the specification requirements, whichever is applicable. Test results must be signed by a testing laboratory representative authorized to sign certified test reports. Furnish the signed reports, certifications, and other documentation to the Contracting Officer via the QC Manager.

1.10 COMPLETION INSPECTIONS

1.10.1 Punch-Out Inspection

Near the completion of all work or any increment thereof, established by a

completion time stated in the Contract Clause entitled "Commencement, Prosecution, and Completion of Work," or stated elsewhere in the specifications, the QC Manager must conduct an inspection of the work and develop a "punch list" of items which do not conform to the approved drawings, specifications, and Contract. Include in the punch list any remaining items on the "Deficiency/Rework Items List", that were not corrected prior to the Punch-Out Inspection as approved by the Contracting Officer in accordance with the paragraph DEFICIENCY/REWORK ITEMS LIST. Include within the punch list the estimated date by which the deficiencies will be corrected. Provide a copy of the punch list to the Contracting Officer.

The QC Manager, or staff, must make follow-on inspections to ascertain that all deficiencies have been corrected. All punch list items must be confirmed as corrected by the QC Manager and concurred by the Contracting Officer. Once this is accomplished, notify the Government that the facility is ready for the Government "Pre-Final Inspection".

1.10.2 Pre-Final Inspection

The Government and QC Manager will perform this inspection to verify that the facility is complete and ready to be occupied. A Government "Pre-Final Punch List" will be documented by the QC Manager as a result of this inspection. The QC Manager will ensure that all items on this list are corrected and concurred by the Contracting Officer prior to notifying the Government that a "Final" inspection with the Client can be scheduled. All items noted on the "Pre-Final" inspection must be corrected and concurred by the Contracting Officer in a timely manner and be accomplished before the Contract completion date for the work, or any increment thereof, if the project is divided into increments by separate completion dates unless exceptions are directed by the Contracting Officer.

1.10.3 Final Acceptance Inspection

Notify the Contracting Officer at least 14 calendar days prior to the date a final acceptance inspection can be held. State within the notice that all items previously identified on the pre-final punch list will be corrected and acceptable, along with any other unfinished Contract work, by the date of the final acceptance inspection. The Contractor must be represented by the QC Manager, the Project Superintendent, and others deemed necessary. Attendees for the Government will include the Contracting Officer, other Government QA personnel, and personnel representing the Client. Failure of the Contractor to have all Contract work acceptably complete for this inspection will be cause for the Contracting Officer to bill the Contractor for the Government's additional inspection cost in accordance with the Contract Clause entitled "Inspection of Construction."

1.11 QUALITY CONTROL (QC) CERTIFICATIONS

1.11.1 Contractor Quality Control (CQC) Report Certification

Contain the following statement within the CQC Report: "On behalf of the Contractor, I certify that this report is complete and correct and equipment and material used, and work performed during this reporting period is in compliance with the Contract drawings and specifications to the best of my knowledge, except as noted in this report."

1.11.2 Completion Certification

Upon completion of work under this Contract, the QC Manager must furnish a certificate to the Contracting Officer attesting that "the work has been completed, inspected, tested and is in compliance with the Contract." Provide a copy of this final QC Certification for completion to the preparer of the Operation & Maintenance (O&M) documentation.

1.12 DOCUMENTATION AND INFORMATION FOR THE CONTRACTING OFFICER

Maintain current and complete records of on-site and off-site QC program operations and activities.

Contact the Contracting Officer for sample forms or print from RMS-QCS as needed. Prior to commencing work on construction, the Contractor must obtain a copy set of the current report forms. The report forms will consist of the Contractor Quality Control (CQC) Report, CQC Report (Continuation Sheet), Contractor Production Report, Contractor Production Report (Continuation Sheet), Preparatory Phase Checklist, Initial Phase Checklist, Testing Plan and Log, and Rework Items List. Unless otherwise provided by the Contracting Officer, Contractor may use the forms provided as related material located at https://www.wbdg.org/dod/ufgs/ufgs-01-45-00.

1.12.1 Construction Documentation

Reports are required for each day that work is performed and must be attached to the Contractor Quality Control Report prepared for the same day. Maintain current and complete records of on-site and off-site QC program operations and activities. Reports are required for each day work is performed. Account for each calendar day throughout the life of the Contract.

The Project Superintendent and the QC Manager must prepare and sign the Contractor Production and CQC Reports, respectively. Every space on the forms must be filled in. Use N/A if nothing can be reported in one of the spaces. The reporting of work must be identified by terminology consistent with the construction schedule. In the "Remarks" sections of the reports, enter pertinent information including directions received, problems encountered during construction, work progress and delays, conflicts or errors in the drawings or specifications, field changes, safety hazards encountered, instructions given and corrective actions taken, delays encountered, a record of visitors to the work site, quality control problem areas, deviations from the QC Plan, construction deficiencies encountered, and meetings held. For each entry in the report(s), identify the Schedule Activity No. that is associated with the entered remark.

1.12.2 Quality Control Activities

CQC and Contractor Production reports will be prepared daily to maintain current records providing factual evidence that required quality control activities and tests have been performed. Include in these records the work of subcontractors and suppliers on an acceptable form that includes, as a minimum, the following information:

a. The name and area of responsibility of the Contractors and any subcontractors.

b. Operating plant/equipment with hours worked, idle, or down for repair.

c. Work performed each day, giving location, description, and by whom. When a Network Analysis Schedule (NAS) is used, identify each item of work performed each day by NAS activity number.

d. Control phase activities performed. Preparatory, and Initial phase Checklists associated with the DFOW referenced to the construction schedule. Follow-up phase activities identified to the DFOW. If testing or specific QC Specialist activities are associated with the Follow-up phase activities for a specific DFOW note this and include those reports.

e. Test and control activities performed with results and references to specifications and drawings requirements. Identify the control phase (Preparatory, Initial, Follow-up). List of deficiencies noted, along with corrective action in accordance with the paragraph DEFICIENCY/REWORK ITEMS LIST.

f. Quantity of materials received at the site with statement as to acceptability, storage, and reference to specifications and drawings requirements.

g. Submittals and deliverables reviewed, with Contract reference, by whom, and action taken.

h. Offsite surveillance activities, including actions taken.

i. Job safety evaluations stating what was checked, results, and instructions or corrective actions.

j. Instructions given/received and conflicts in plans and specifications.

1.12.3 Verification Statement

Indicate a description of trades working on the project; the number of personnel working; weather conditions encountered; and any delays encountered. Cover both conforming and deficient features and include a statement that equipment and materials incorporated in the work and workmanship comply with the Contract.

Furnish the original and one copy of these records in report form to the Government by 10:00 AM the next working day after the date covered by the report. As a minimum, prepare and submit one report for every seven days of no work and on the last day of a no work period. All calendar days need to be accounted for throughout the life of the Contract. The first report following a day of no work will be for that day only. Reports need to be signed and dated by the QC Manager. Include copies of test reports and copies of reports prepared by all subordinate quality control personnel within the QC Manager Report.

1.12.4 Quality Control Validation

Establish and maintain the following in an electronic folder. Divide folder into a series of tabbed sections as shown below. Ensure folder is updated at each required progress meeting.

a. CQC Meeting minutes in accordance with paragraph QUALITY CONTROL (QC) MEETINGS.

b. All completed Preparatory and Initial Phase Checklists, arranged by specification section, further sorted by DFOW referenced to the construction schedule. Submit each individual Phase Checklist the day the phase event occurs as part of the CQC daily report.

c. All milestone inspections, arranged by Activity Number referenced to the construction schedule.

d. An up-to-date copy of the Testing Plan and Log with supporting field test reports, arranged by specification section referenced to the DFOW to which individual reports results are associated. Individual field test reports will be submitted within two working days after the test is performed in accordance with the paragraph QUALITY CONTROL ACTIVITIES.

e. Copies of all Contract modifications, arranged in numerical order. Also include documentation that modified work was accomplished.

f. An up-to-date copy of the paragraph DEFICIENCY/REWORK ITEMS LIST.

g. Upon commencement of Completion Inspections of the entire project or any defined portion, maintain up-to-date copies of all punch lists issued by the QC staff to the Contractor and subcontractors and all punch lists issued by the Government in accordance with the paragraph COMPLETION INSPECTIONS.

1.12.5 Testing Plan and Log

As tests are performed, the QC Manager will record on the "Testing Plan and Log" the date the test was performed and the date the test results were forwarded to the Contracting Officer. Attach a copy of the updated "Testing Plan and Log" to the last daily CQC Report of each month. Provide a copy of the final "Testing Plan and Log" to the preparer of the Operation & Maintenance (O&M) documentation.

1.12.6 As-Built Drawings

The QC Manager must ensure the as-built drawings, required by Section 01 12 00 CONSTRUCTION GENERAL are kept current on a daily basis and marked to show deviations which have been made from the Contract drawings. The as-built drawings document commences with the QC Manager ensuring all amendments, or changes to the Contract prior to Contract award are accurately noted in the initial document set creating the accurate baseline of the Contract prior to any work starting. Ensure each deviation has been identified with the appropriate modifying documentation (e.g., PC No., Modification No., Request for Information No.). The QC Manager must initial each revision. Upon completion of work, the QC Manager will furnish a certificate attesting to the accuracy of the as-built drawings prior to submission to the Contracting Officer.

1.13 NOTIFICATION ON NON-COMPLIANCE

The Contracting Officer will notify the Contractor of any detected non-compliance with the Contract. Take immediate corrective action after receipt of such notice. Such notice, when delivered to the Contractor at the work site, is deemed sufficient for the purpose of notification. If the Contractor fails or refuses to comply promptly, the Contracting Officer may issue an order stopping all or part of the work until satisfactory corrective action has been taken. No part of the time lost

due to such stop orders will be made the subject of a claim for extension of time for excess costs or damages by the Contractor.

1.14 DELIVERY, STORAGE, AND HANDLING

Designate receiving/storage areas for incoming material to be delivered according to installation schedule and to be placed convenient to work area in order to minimize waste due to excessive materials handling and misapplication. Store and handle materials in a manner as to prevent loss from weather and other damage. Keep materials, products, and accessories covered and off the ground, and store in a dry, secure area. Prevent contact with material that may cause corrosion, discoloration, or staining. Protect all materials and installations from damage by the activities of other trades.

PART 2 PRODUCTS

Not Used

PART 3 EXECUTION

Not Used

-- End of Section --

This page was intentionally left blank for duplex printing.

SECTION TABLE OF CONTENTS

DIVISION 01 - GENERAL REQUIREMENTS

SECTION 01 45 00.15 10

RESIDENT MANAGEMENT SYSTEM CONTRACTOR MODE (RMS CM)

PART 1 GENERAL

1.1 REFERENCES
1.2 MEASUREMENT AND PAYMENT
1.3 CONTRACT ADMINISTRATION
1.3.1 Correspondence and Electronic Communications
1.3.2 Other Factors
1.4 RMS SOFTWARE
1.5 CONTRACT DATABASE - GOVERNMENT
1.6 CONTRACT DATABASE - CONTRACTOR
1.6.1 Administration
1.6.1.1 Contractor Information
1.6.1.2 Subcontractor Information
1.6.1.3 Correspondence
1.6.1.4 Equipment
1.6.1.5 Reports
1.6.1.6 Request For Information (RFI)
1.6.2 Finances
1.6.2.1 Pay Activity Data
1.6.2.2 Payment Requests
1.6.3 Quality Control (QC)
1.6.3.1 Quality Control (QC) Reports
1.6.3.2 Deficiency Tracking.
1.6.3.3 Three-Phase Control Meetings
1.6.3.4 Labor and Equipment Hours
1.6.3.5 Accident/Safety Reporting
1.6.3.6 Definable Features of Work
1.6.3.7 Activity Hazard Analysis
1.6.4 Submittal Management
1.6.5 Schedule
1.6.6 Closeout
1.7 IMPLEMENTATION
1.8 NOTIFICATION OF NONCOMPLIANCE

PART 2 PRODUCTS

PART 3 EXECUTION

-- End of Section Table of Contents --

SECTION 01 45 00.15 10

RESIDENT MANAGEMENT SYSTEM CONTRACTOR MODE (RMS CM)

PART 1 GENERAL

1.1 REFERENCES

The publications listed below form a part of this section to the extent referenced. The publications are referred to within the text by the basic designation only.

U.S. ARMY CORPS OF ENGINEERS (USACE)

EM 385-1-1	(2024) Safety -- Safety and Occupational Health (SOH) Requirements

1.2 MEASUREMENT AND PAYMENT

The work of this section is not measured for payment. The Contractor is responsible for the work of this section, without any direct compensation other than the payment received for contract items.

1.3 CONTRACT ADMINISTRATION

The Government will use the Resident Management System (RMS) to assist in its monitoring and administration of this contract. The Government accesses the system using the Government Mode of RMS (RMS GM) and the Contractor accesses the system using the Contractor Mode (RMS CM). The term RMS will be used in the remainder of this section for both RMS GM and RMS CM. The joint Government-Contractor use of RMS facilitates electronic exchange of information and overall management of the contract. The Contractor accesses RMS to record, maintain, input, track, and electronically share information with the Government throughout the contract period in the following areas:

Administration
Finances
Quality Control
Submittal Monitoring
Scheduling
Closeout
Import/Export of Data

1.3.1 Correspondence and Electronic Communications

For ease and speed of communications, exchange correspondence and other documents in electronic format to the maximum extent feasible. Some documents may be required in paper format with original signatures. Paper documents will govern in the event of discrepancy with the electronic version. Contracting Officer will determine which documents require submission of paper copies.

1.3.2 Other Factors

Other portions of this document have a direct relationship to the

reporting accomplished through RMS. Particular attention is directed to FAR 52.236-15 Schedules for Construction Contracts; FAR 52.232-27 Prompt Payment for Construction Contracts; FAR 52.232-5 Payments Under Fixed-Priced Construction Contracts; Section 01 33 00 SUBMITTAL PROCEDURES; Section 01 35 26 GOVERNMENTAL SAFETY REQUIREMENTS; and Section 01 45 00 QUALITY CONTROL.

1.4 RMS SOFTWARE

RMS is a web based application. Download, install and be able to utilize the latest version of RMS within 7 calendar days of receipt of the Notice to Proceed. RMS software, user manuals, access and installation instructions, program updates and training information are available from the RMS website (https://rms.usace.army.mil). The Government and the Contractor will have different access authorities to the same contract database through RMS. The common database will be updated automatically each time a user finalizes an entry or change.

1.5 CONTRACT DATABASE - GOVERNMENT

The Government will enter the basic contract award data in RMS prior to granting the Contractor access. The Government entries into RMS will generally be related to submittal reviews, correspondence status, and Quality Assurance(QA)comments, as well as other miscellaneous administrative information.

1.6 CONTRACT DATABASE - CONTRACTOR

Contractor entries into RMS establish, maintain, and update data throughout the duration of the contract. Contractor entries generally include prime and subcontractor information, daily reports, submittals, RFI's, schedule updates and payment requests. RMS includes the ability to import attachments and export reports in many of the modules, including submittals. The Contractor responsibilities for entries in RMS typically include the following items:

1.6.1 Administration

1.6.1.1 Contractor Information

Enter all current Contractor administrative data and information into RMS within 7 calendar days of receiving access to the contract in RMS. This includes, but is not limited to, Contractor's name, address, telephone numbers, management staff, and other required items.

1.6.1.2 Subcontractor Information

Enter all missing subcontractor administrative data and information into RMS CM within seven calendar days of receiving access to the Contract in RMS or within seven calendar days of the signing of the subcontractor agreement for agreements signed at a later date. This includes name, trade, address, phone numbers, and other required information for all subcontractors. A subcontractor is listed separately for each trade to be performed.

1.6.1.3 Correspondence

Identify all Contractor correspondence to the Government with a serial number. Prefix correspondence initiated by the Contractor's site office

with "S". Prefix letters initiated by the Contractor's home (main) office with "H". Letters are numbered starting from 0001. (e.g., H-0001 or S-0001). The Government's letters to the Contractor will be prefixed with "C" or "RFP".

1.6.1.4 Equipment

Enter and maintain a current list of equipment planned for use or being used on the jobsite, including the most recent and planned equipment inspection dates in accordance with Section 01 45 00 QUALITY CONTROL.

1.6.1.5 Reports

Track the status of the project using the reports available in RMS. The value of these reports reflects the quality of the data input. These reports include but are not limited to the Progress Payment Request worksheet, Quality Control (QC) comments, Deficiency Tracking Log, Submittal Register Status, and Three-Phase Control worksheets in accordance with Sections 01 33 00 SUBMITTAL PROCEDURES and 01 45 00 QUALITY CONTROL.

1.6.1.6 Request For Information (RFI)

Create and track all Requests For Information (RFI) in the RMS Administration Module for Government review and response. Provide status at weekly progress meeting in accordance with Section 01 30 00.24 OTHER ADMINISTRATIVE AND SPECIAL REQUIREMENTS.

1.6.2 Finances

1.6.2.1 Pay Activity Data

Develop and enter a list of pay activities in conjunction with the project schedule. The sum of pay activities equals the total Contract amount, including modifications. Each pay activity must be assigned to a Contract Line Item Number (CLIN). The sum of the activities assigned to a CLIN equals the amount of each CLIN.

1.6.2.2 Payment Requests

Prepare all progress payment requests using RMS. Update the work completed under the Contract at least monthly, measured as percent or as specific quantities. After the update, generate a payment request and prompt payment certification using RMS. Submit the signed prompt payment certification and payment request as well as supporting data, either electronically or by hard copy.

1.6.3 Quality Control (QC)

Enter and track implementation of the 3-phase QC Control System, QC testing, transferred and installed property and warranties in RMS. Prepare daily reports, identify and track deficiencies, document progress of work, and support other Contractor QC requirements in RMS. Maintain all data on a daily basis. Ensure that RMS reflects all quality control methods, tests and actions contained within the Contractor Quality Control (CQC) Plan and Government review comments. Provide within seven calendar days of Government acceptance of the CQC Plan.

1.6.3.1 Quality Control (QC) Reports

The Contractor's Quality Control (QC) Daily Report in RMS is the official report. The Contractor can use other supplemental formats to record QC data, but information from any supplemental formats are to be consolidated and entered into the RMS QC Daily Report. Any supplemental information may be entered into RMS as an attachment to the report. QC Daily Reports must be finalized and signed in RMS within 24 hours after the date covered by the report.

1.6.3.2 Deficiency Tracking.

Use the QC Daily Report Module to enter and track deficiencies. Deficiencies identified and entered into RMS by the Contractor or the Government will be sequentially numbered with a QC or QA prefix for tracking purposes. Enter each deficiency into RMS the same day that the deficiency is identified. Monitor, track and resolve all QC and QA entered deficiencies. A deficiency is not considered to be corrected until the Government indicates concurrence in RMS.

1.6.3.3 Three-Phase Control Meetings

Maintain scheduled and actual dates and times of preparatory and initial control meetings in RMS, and upload meeting minutes of the meetings. Worksheets for the three-phase control meetings are generated within RMS.

1.6.3.4 Labor and Equipment Hours

Enter labor and equipment exposure hours on a daily basis. Roll up the labor and equipment exposure data into a monthly exposure report.

1.6.3.5 Accident/Safety Reporting

Both the Contractor and the Government enter safety related comments in RMS as a deficiency. The Contractor must monitor, track and show resolution for safety issues in the QC Daily Report area of the RMS QC Module. In addition, follow all reporting requirements for accidents and incidents as required in EM 385-1-1, Section 01 35 26 GOVERNMENTAL SAFETY REQUIREMENTS and as required by any other applicable Federal, State or local agencies.

1.6.3.6 Definable Features of Work

Enter each feature of work, as defined in the approved CQC Plan, into the RMS QC Module. A feature of work may be associated with a single or multiple pay activities, however a pay activity is only to be linked to a single feature of work.

1.6.3.7 Activity Hazard Analysis

Import activity hazard analysis electronic document files into the RMS QC Module utilizing the document package manager. Prepare activity hazard analysis in accordance with Section 01 35 26 GOVERNMENT SAFETY REQUIREMENTS.

1.6.4 Submittal Management

Enter all current submittal register data and information into within the time frame directed by the Contracting Officer. The Contractor will import

the information shown in the submittal register following the specification Section 01 33 00 SUBMITTAL PROCEDURES unless otherwise directed by the Contracting Officer. Group electronic submittal documents into transmittal packages to send to the Government, except very large electronic files, samples, spare parts, mock ups, color boards, or where hard copies are specifically required. Track transmittals and update the submittal register in RMS on a daily basis throughout the duration of the Contract.

Contractor may request submittals to be added to RMS throughout the lifecycle of the project. Approval/disapproval of Contractor requests is at the discretion of the Contracting Officer. Submittals entry into RMS must be updated daily or as practical for performance of the Contract, as approved by the Contracting Officer.

1.6.5 Schedule

Develop a construction schedule consisting of pay activities, in accordance with Contract Clause, "Schedules for Construction Contracts". Enter and update the contract project schedule in RMS by either manually entering all schedule data or by importing the Standard Data Exchange Format (SDEF) file. Include with each pay request the updated schedule. Provide electronic copies of transmittals.

1.6.6 Closeout

Closeout documents, processes and forms are managed and tracked in RMS by both the Contractor and the Government. Ensure that all closeout documents are entered, completed and documented within RMS.

1.7 IMPLEMENTATION

Use of RMS as described in the preceding paragraphs is mandatory. Ensure that sufficient resources are available to maintain contract data within the RMS system. RMS is an integral part of the Contractor's required management of quality control.

1.8 NOTIFICATION OF NONCOMPLIANCE

Take corrective action within seven calendar days after receipt of notice of RMS non-compliance by the Contracting Officer.

PART 2 PRODUCTS

Not Used

PART 3 EXECUTION

Not Used

-- End of Section --

SECTION TABLE OF CONTENTS

DIVISION 01 - GENERAL REQUIREMENTS

SECTION 01 57 20.00 10

ENVIRONMENTAL PROTECTION

PART 1 GENERAL

1.1 REFERENCES
1.2 DEFINITIONS
1.2.1 Environmental Pollution and Damage
1.2.2 Environmental Protection
1.2.3 Contractor Generated Hazardous Waste
1.2.4 Land Application for Discharge Water
1.3 GENERAL REQUIREMENTS
1.4 SUBCONTRACTORS
1.5 PAYMENT
1.6 SUBMITTALS
1.7 ENVIRONMENTAL COORDINATION, PERMITS, NOTICES, REVIEWS AND/OR APPROVALS
1.8 ENVIRONMENTAL PROTECTION PLAN
1.8.1 Compliance
1.8.2 Contents
1.8.3 Appendix
1.9 PROTECTION FEATURES
1.10 ENVIRONMENTAL ASSESSMENT OF CONTRACT DEVIATIONS
1.11 NOTIFICATION

PART 2 PRODUCTS (NOT USED)

PART 3 EXECUTION

3.1 LAND RESOURCES
3.1.1 Work Area Limits
3.1.2 Contractor Facilities and Work Areas
3.2 AIR RESOURCES
3.2.1 Particulates
3.2.2 Odors
3.2.3 Sound Intrusions
3.2.4 Burning
3.3 CHEMICAL MATERIALS MANAGEMENT AND WASTE DISPOSAL
3.3.1 Solid Wastes
3.3.2 Chemicals and Chemical Wastes
3.3.3 Contractor Generated Hazardous Wastes/Excess Hazardous Materials
3.4 RECYCLING AND WASTE MINIMIZATION
3.5 NON-HAZARDOUS SOLID WASTE DIVERSION REPORT
3.6 PREVIOUSLY USED EQUIPMENT
3.7 MAINTENANCE OF POLLUTION FACILITIES
3.8 TRAINING OF CONTRACTOR PERSONNEL
3.9 POST PERFORMANCE CLEANUP

-- End of Section Table of Contents --

SECTION 01 57 20.00 10

ENVIRONMENTAL PROTECTION

PART 1 GENERAL

1.1 REFERENCES

The publications listed below form a part of this specification to the extent referenced. The publications are referred to within the text by the basic designation only.

U.S. ARMY CORPS OF ENGINEERS (USACE)

EM 385-1-1	(2024) Safety -- Safety and Occupational Health (SOH) Requirements

U.S. NATIONAL ARCHIVES AND RECORDS ADMINISTRATION (NARA)

40 CFR 261	Identification and Listing of Hazardous Waste
40 CFR 262	Standards Applicable to Generators of Hazardous Waste
40 CFR 302	Designation, Reportable Quantities, and Notification
40 CFR 355	Emergency Planning and Notification
40 CFR 68	Chemical Accident Prevention Provisions
49 CFR 171 - 178	Hazardous Materials Regulations

1.2 DEFINITIONS

1.2.1 Environmental Pollution and Damage

Environmental pollution and damage is the presence of chemical, physical, or biological elements or agents which adversely affect human health or welfare; unfavorably alter ecological balances of importance to human life; affect other species of importance to humankind; or degrade the environment aesthetically, culturally and/or historically.

1.2.2 Environmental Protection

Environmental protection is the prevention/control of pollution and habitat disruption that may occur to the environment during construction. The control of environmental pollution and damage requires consideration of land, water, and air; biological and cultural resources; and includes management of visual aesthetics; noise; solid, chemical, gaseous, and liquid waste; radiant energy and radioactive material as well as other pollutants.

1.2.3 Contractor Generated Hazardous Waste

Contractor generated hazardous waste means materials that, if abandoned or disposed of, may meet the definition of a hazardous waste. These waste streams would typically consist of material brought on site by the Contractor to execute work, but are not fully consumed during the course of construction. Examples include, but are not limited to, excess paint thinners (i.e. methyl ethyl ketone, toluene etc.), waste thinners, excess paints, excess solvents, waste solvents, and excess pesticides, and contaminated pesticide equipment rinse water.

1.2.4 Land Application for Discharge Water

The term "Land Application" for discharge water implies that the Contractor must discharge water at a rate which allows the water to percolate into the soil. No sheeting action, soil erosion, discharge into storm sewers, discharge into defined drainage areas, or discharge into the "waters of the United States" must occur. Land Application must be in compliance with all applicable Federal, State, and local laws and regulations.

1.3 GENERAL REQUIREMENTS

Minimize environmental pollution and damage that may occur as the result of construction operations. The environmental resources within the project boundaries and those affected outside the limits of permanent work must be protected during the entire duration of this contract. Comply with all applicable environmental Federal, State, and local laws and regulations. Any delays resulting from failure to comply with environmental laws and regulations will be the Contractor's responsibility.

1.4 SUBCONTRACTORS

Ensure compliance with this section by subcontractors.

1.5 PAYMENT

No separate payment will be made for work covered under this section. Payment of fees associated with environmental permits, application, and/or notices obtained by the Contractor, and payment of all fines/fees for violation or non-compliance with Federal, State, Regional and local laws and regulations are the Contractor's responsibility. All costs associated with this section must be included in the contract price.

1.6 SUBMITTALS

Government approval is required for submittals with a "G" designation; submittals not having a "G" designation are for information only. When used, a designation following the "G" designation identifies the office that will review the submittal for the Government. Submit the following in accordance with Section 01 33 00 SUBMITTAL PROCEDURES:

SD-01 Preconstruction Submittals

Environmental Protection Plan; G, AO

The environmental protection plan.

1.7 ENVIRONMENTAL COORDINATION, PERMITS, NOTICES, REVIEWS AND/OR APPROVALS

The Contractor shall be responsible for contacting the appropriate Federal, State, Regional, and local environmental agencies to identify all required environmental permits (construction and operating), notices, reviews, and approvals required for the project. Once the requirements are identified, the Contractor shall be responsible for coordinating the requirements with the Contracting Officer in regard to implementation for the project. The Contractor shall ensure that all coordination, permits, notices, reviews and/or approvals are completed and submitted with each applicable phase of the design. Prior to construction starting for any phase, the Contractor shall assure that all permits and/or approvals are received and copies are submitted to the Contracting Officer. The Contractor shall be responsible for any contract delays resulting from failure to obtain environmental permits, notices, reviews and/or approvals when required.

1.8 ENVIRONMENTAL PROTECTION PLAN

Prior to commencing construction activities or delivery of materials to the site, submit an Environmental Protection Plan for review and approval by the Contracting Officer. The purpose of the Environmental Protection Plan is to present a comprehensive overview of known or potential environmental issues which the Contractor must address during construction. Issues of concern must be defined within the Environmental Protection Plan as outlined in this section. Address each topic at a level of detail commensurate with the environmental issue and required construction task(s). Topics or issues which are not identified in this section, but are considered necessary, must be identified and discussed after those items formally identified in this section. Prior to submittal of the Environmental Protection Plan, meet with the Contracting Officer for the purpose of discussing the implementation of the initial Environmental Protection Plan; possible subsequent additions and revisions to the plan including any reporting requirements; and methods for administration of the Contractor's Environmental Plans. The Environmental Protection Plan must be current and maintained onsite by the Contractor.

1.8.1 Compliance

No requirement in this Section will relieve the Contractor of any applicable Federal, State, and local environmental protection laws and regulations. During Construction, the Contractor will be responsible for identifying, implementing, and submitting for approval any additional requirements to be included in the Environmental Protection Plan.

1.8.2 Contents

Include in the environmental protection plan, but not limit it to, the following:

a. Name(s) of person(s) within the Contractor's organization who is(are) responsible for ensuring adherence to the Environmental Protection Plan.

b. Name(s) and qualifications of person(s) responsible for manifesting hazardous waste to be removed from the site, if applicable.

c. Name(s) and qualifications of person(s) responsible for training the Contractor's environmental protection personnel.

d. Description of the Contractor's environmental protection personnel training program.

e. Work area plan showing the proposed activity in each portion of the area and identifying the areas of limited use or nonuse. Plan should include measures for marking the limits of use areas including methods for protection of features to be preserved within authorized work areas.

f. Include in the Spill Control plan the procedures, instructions, and reports to be used in the event of an unforeseen spill of a substance regulated by 40 CFR 68, 40 CFR 302, 40 CFR 355, and/or regulated under State or Local laws and regulations. The Spill Control Plan supplements the requirements of EM 385-1-1. Include in this plan, as a minimum:

(1) The name of the individual who will report any spills or hazardous substance releases and who will follow up with complete documentation. This individual will immediately notify the Contracting Officer and the local Fire Department in addition to the legally required Federal, State, and local reporting channels (including the National Response Center 1-800-424-8802) if a reportable quantity is released to the environment. Include in the plan a list of the required reporting channels and telephone numbers.

(2) The name and qualifications of the individual who will be responsible for implementing and supervising the containment and cleanup.

(3) Training requirements for Contractor's personnel and methods of accomplishing the training.

(4) A list of materials and equipment to be immediately available at the job site, tailored to cleanup work of the potential hazard(s) identified.

(5) The names and locations of suppliers of containment materials and locations of additional fuel oil recovery, cleanup, restoration, and material-placement equipment available in case of an unforeseen spill emergency.

(6) The methods and procedures to be used for expeditious contaminant cleanup.

g. A non-hazardous solid waste disposal plan identifying methods and locations for solid waste disposal including clearing debris and schedules for disposal.

(1) Identify any subcontractors responsible for the transportation and disposal of solid waste. Submit licenses or permits for solid waste disposal sites that are not a commercial operating facility.

(2) Evidence of the disposal facility's acceptance of the solid waste must be attached to this plan during the construction. Attach a copy of each of the Non-hazardous Solid Waste Diversion Reports to the disposal plan. Submit the report for the previous quarter

on the first working day after the first quarter that non-hazardous solid waste has been disposed and/or diverted (e.g. the first working day of January, April, July, and October).

(3) Indicate in the report the total amount of waste generated and total amount of waste diverted in cubic yards or tons along with the percent that was diverted.

(4) A recycling and solid waste minimization plan with a list of measures to reduce consumption of energy and natural resources. Detail in the plan the Contractor's actions to comply with and to participate in Federal, State, Regional, and local government sponsored recycling programs to reduce the volume of solid waste at the source.

1.8.3 Appendix

Attach to the Environmental Protection Plan, as an appendix, copies of all environmental permits, permit application packages, approvals to construct, notifications, certifications, reports, and termination documents.

1.9 PROTECTION FEATURES

This paragraph supplements the Contract Clause PROTECTION OF EXISTING VEGETATION, STRUCTURES, EQUIPMENT, UTILITIES, AND IMPROVEMENTS. Prior to start of any onsite construction activities, the Contractor and the Contracting Officer will make a joint condition survey. Immediately following the survey, the Contractor will prepare a brief report including a plan describing the features requiring protection under the provisions of the Contract Clauses, which are not specifically identified on the drawings as environmental features requiring protection along with the condition of trees, shrubs and grassed areas immediately adjacent to the site of work and adjacent to the Contractor's assigned storage area and access route(s), as applicable. This survey report will be signed by both the Contractor and the Contracting Officer upon mutual agreement as to its accuracy and completeness. The Contractor must protect those environmental features included in the survey report and any indicated on the drawings, regardless of interference which their preservation may cause to the work under the contract.

1.10 ENVIRONMENTAL ASSESSMENT OF CONTRACT DEVIATIONS

Any deviations from the drawings, plans and specifications, requested by the Contractor and which may have an environmental impact, will be subject to approval by the Contracting Officer and may require an extended review, processing, and approval time. The Contracting Officer reserves the right to disapprove alternate methods, even if they are more cost effective, if the Contracting Officer determines that the proposed alternate method will have an adverse environmental impact.

1.11 NOTIFICATION

The Contracting Officer will notify the Contractor in writing of any observed noncompliance with Federal, State or local environmental laws or regulations, permits, and other elements of the Contractor's Environmental Protection plan. After receipt of such notice, the Contractor will inform the Contracting Officer of the proposed corrective action and take such action when approved by the Contracting Officer. The Contracting Officer

may issue an order stopping all or part of the work until satisfactory corrective action has been taken. No time extensions will be granted or equitable adjustments allowed for any such suspensions. This is in addition to any other actions the Contracting Officer may take under the contract, or in accordance with the Federal Acquisition Regulation or Federal Law.

PART 2 PRODUCTS (NOT USED)

PART 3 EXECUTION

3.1 LAND RESOURCES

Confine all activities to areas defined by the drawings and specifications. Identify any land resources to be preserved within the work area prior to the beginning of any construction. Do not remove, cut, deface, injure, or destroy land resources including trees, shrubs, vines, grasses, topsoil, and land forms without approval, except in areas indicated on the drawings or specified to be cleared. Ropes, cables, or guys will not be fastened to or attached to any trees for anchorage unless specifically authorized. Provide effective protection for land and vegetation resources at all times, as defined in the following subparagraphs. Remove stone, soil, or other materials displaced into uncleared areas.

3.1.1 Work Area Limits

Mark the areas that need not be disturbed under this contract prior to commencing construction activities. Mark or fence isolated areas within the general work area which are not to be disturbed. Protect monuments and markers before construction operations commence. Where construction operations are to be conducted during darkness, any markers must be visible in the dark. The Contractor's personnel must be knowledgeable of the purpose for marking and/or protecting particular objects.

3.1.2 Contractor Facilities and Work Areas

Place field offices, staging areas, stockpile storage, and temporary buildings in areas designated on the drawings or as directed by the Contracting Officer. Temporary movement or relocation of Contractor facilities will be made only when approved. Erosion and sediment controls must be provided for onsite borrow and spoil areas to prevent sediment from entering nearby waters. Temporary excavation and embankments for plant and/or work areas must be controlled to protect adjacent areas.

3.2 AIR RESOURCES

Equipment operation, activities, or processes will be in accordance with all Federal and State air emission and performance laws and standards.

3.2.1 Particulates

Dust particles; aerosols and gaseous by-products from construction activities; and processing and preparation of materials, such as from asphaltic batch plants; must be controlled at all times, including weekends, holidays and hours when work is not in progress. Maintain excavations, stockpiles, haul roads, permanent and temporary access roads, plant sites, spoil areas, borrow areas, and other work areas within or outside the project boundaries free from particulates which would cause

the Federal, State, and local air pollution standards to be exceeded or which would cause a hazard or a nuisance. Sprinkling, chemical treatment of an approved type, baghouse, scrubbers, electrostatic precipitators or other methods will be permitted to control particulates in the work area. Sprinkling, to be efficient, must be repeated to keep the disturbed area damp at all times. Provide sufficient, competent equipment available to accomplish these tasks. Perform particulate control as the work proceeds and whenever a particulate nuisance or hazard occurs. Comply with all State and local visibility regulations.

3.2.2 Odors

Odors from construction activities must be controlled at all times. The odors must be in compliance with State regulations and/or local ordinances and may not constitute a health hazard.

3.2.3 Sound Intrusions

Keep construction activities under surveillance and control to minimize environment damage by noise. Comply with the provisions of the State of North Dakota rules.

3.2.4 Burning

Burning is prohibited on the Government premises.

3.3 CHEMICAL MATERIALS MANAGEMENT AND WASTE DISPOSAL

Disposal of wastes will be as directed below, unless otherwise specified in other sections and/or shown on the drawings.

3.3.1 Solid Wastes

Place solid wastes (excluding clearing debris) in containers which are emptied on a regular schedule. Handling, storage, and disposal must be conducted to prevent contamination. Employ segregation measures so that no hazardous or toxic waste will become co-mingled with solid waste. Transport solid waste off Government property and dispose of it in compliance with Federal, State, and local requirements for solid waste disposal. A Subtitle D RCRA permitted landfill will be the minimum acceptable offsite solid waste disposal option. Verify that the selected transporters and disposal facilities have the necessary permits and licenses to operate. Comply with Federal, State, and local laws and regulations pertaining to the use of landfill areas.

3.3.2 Chemicals and Chemical Wastes

Dispense chemicals ensuring no spillage to the ground or water. Perform and document periodic inspections of dispensing areas to identify leakage and initiate corrective action. This documentation will be periodically reviewed by the Government. Collect chemical waste in corrosion resistant, compatible containers. Collection drums must be monitored and removed to a staging or storage area when contents are within 6 inches of the top. Wastes will be classified, managed, stored, and disposed of in accordance with Federal, State, and local laws and regulations.

3.3.3 Contractor Generated Hazardous Wastes/Excess Hazardous Materials

Hazardous wastes are defined in 40 CFR 261, or are as defined by

applicable State and local regulations. Hazardous materials are defined in 49 CFR 171 - 178. At a minimum, manage and store hazardous waste in compliance with 40 CFR 262 in accordance with the Project Office hazardous waste management plan. Take sufficient measures to prevent spillage of hazardous and toxic materials during dispensing. Segregate hazardous waste from other materials and wastes, protect it from the weather by placing it in a safe covered location, and take precautionary measures such as berming or other appropriate measures against accidental spillage. Storage, describing, packaging, labeling, marking, and placarding of hazardous waste and hazardous material in accordance with 49 CFR 171 - 178, State, and local laws and regulations is the Contractor's responsibility. Transport Contractor generated hazardous waste off Government property within 60 days in accordance with the Environmental Protection Agency and the Department of Transportation laws and regulations. Dispose of hazardous waste in compliance with Federal, State and local laws and regulations. Spills of hazardous or toxic materials must be immediately reported to the Contracting Officer. Cleanup and cleanup costs due to spills are the Contractor's responsibility. The disposition of Contractor generated hazardous waste and excess hazardous materials are the Contractor's responsibility. Coordinate the disposition of hazardous waste with the Project Office's Hazardous Waste Manager and the Contracting Officer.

3.4 RECYCLING AND WASTE MINIMIZATION

Participate in State and local government sponsored recycling programs. The Contractor is further encouraged to minimize solid waste generation throughout the duration of the project.

Divert a minimum of 60 percent by weight of the non-hazardous project construction waste and demolition debris/waste from the landfill or incinerator. Follow applicable industry standards in the management of waste. Apply sound environmental principles in the management of waste. (1) Practice efficient waste management when sizing, cutting, and installing products and materials and (2) use all reasonable means to divert construction waste and demolition debris/waste from landfills and incinerators and to facilitate the recycling or reuse of excess construction materials.

3.5 NON-HAZARDOUS SOLID WASTE DIVERSION REPORT

Maintain an inventory of non-hazardous solid waste diversion and disposal of construction and demolition debris. Submit a report to the Contracting Officer on the first working day after each fiscal year quarter, starting the first quarter that non-hazardous solid waste has been generated. Include the following in the report:

a. Construction and Demolition (C&D) Debris Disposed = _____ in cubic yards or tons, as appropriate.

b. Construction and Demolition (C&D) Debris Recycled = _____ in cubic yards or tons, as appropriate.

c. Total C&D Debris Generated = _____ in cubic yards or tons, as appropriate.

d. Waste Sent to Waste-To-Energy Incineration Plant (This amount should not be included in the recycled amount) = _____ in cubic yards or tons, as appropriate.

3.6 PREVIOUSLY USED EQUIPMENT

Clean all previously used construction equipment prior to bringing it onto the project site. Ensure that the equipment is free from soil residuals, egg deposits from plant pests, noxious weeds, and plant seeds. Consult with the USDA jurisdictional office for additional cleaning requirements.

3.7 MAINTENANCE OF POLLUTION FACILITIES

Maintain permanent and temporary pollution control facilities and devices for the duration of the contract or for that length of time construction activities create the particular pollutant.

3.8 TRAINING OF CONTRACTOR PERSONNEL

The Contractor's personnel must be trained in all phases of environmental protection and pollution control. Conduct environmental protection/pollution control meetings for all personnel prior to commencing construction activities. Additional meetings must be conducted for new personnel and when site conditions change. Include in the training and meeting agenda: methods of detecting and avoiding pollution; familiarization with statutory and contractual pollution standards; installation and care of devices, vegetative covers, and instruments required for monitoring purposes to ensure adequate and continuous environmental protection/pollution control; anticipated hazardous or toxic chemicals or wastes, and other regulated contaminants; recognition and protection of archaeological sites, artifacts, wetlands, and endangered species and their habitat that are known to be in the area.

3.9 POST PERFORMANCE CLEANUP

The Contractor will clean up all areas used for construction in accordance with Contract Clause: "Cleaning Up". Unless otherwise instructed in writing by the Contracting Officer, obliterate all signs of temporary construction facilities such as haul roads, work area, structures, foundations of temporary structures, stockpiles of excess or waste materials, and other vestiges of construction prior to final acceptance of the work. The disturbed area must be graded, filled and the entire area seeded unless otherwise indicated.

-- End of Section --

This page was intentionally left blank for duplex printing.

SECTION TABLE OF CONTENTS

DIVISION 02 - EXISTING CONDITIONS

SECTION 02 41 00

DEMOLITION

PART 1 GENERAL

1.1 REFERENCES
1.2 PROJECT DESCRIPTION
1.2.1 Definitions
1.2.1.1 Demolition
1.2.1.2 Demolition Plan
1.2.2 Demolition/Deconstruction Plan
1.2.3 General Requirements
1.3 ITEMS TO REMAIN IN PLACE
1.3.1 Existing Construction Limits and Protection
1.3.2 Weather Protection
1.3.3 Utility Service
1.3.4 Facilities
1.4 BURNING
1.5 AVAILABILITY OF WORK AREAS
1.6 SUBMITTALS
1.7 QUALITY ASSURANCE
1.7.1 Dust and Debris Control
1.8 PROTECTION
1.8.1 Protection of Personnel
1.9 RELOCATIONS
1.10 EXISTING CONDITIONS

PART 2 PRODUCTS

PART 3 EXECUTION

3.1 EXISTING FACILITIES TO BE REMOVED
3.1.1 Utilities and Related Equipment
3.1.1.1 General Requirements
3.1.1.2 Disconnecting Existing Utilities
3.1.2 Patching
3.1.3 Electrical Equipment and Fixtures
3.1.3.1 Fixtures
3.1.3.2 Electrical Devices
3.1.3.3 Wiring Ducts or Troughs
3.1.3.4 Conduit and Miscellaneous Items
3.2 DISPOSITION OF MATERIAL
3.2.1 Title to Materials
3.2.2 Reuse of Materials and Equipment
3.2.2.1 Interior Door Reuse
3.2.3 Unsalvageable and Non-Recyclable Material
3.3 CLEANUP
3.4 DISPOSAL OF REMOVED MATERIALS

3.4.1 Regulation of Removed Materials
3.4.2 Burning on Government Property
3.4.3 Removal to Spoil Areas on Government Property
3.4.4 Removal from Government Property
3.5 REUSE OF SALVAGED ITEMS

-- End of Section Table of Contents --

SECTION 02 41 00

DEMOLITION

PART 1 GENERAL

1.1 REFERENCES

The publications listed below form a part of this specification to the extent referenced. The publications are referred to within the text by the basic designation only.

AMERICAN SOCIETY OF SAFETY PROFESSIONALS (ASSP)

ASSP A10.6	(2006) Safety & Health Program Requirements for Demolition Operations - American National Standard for Construction and Demolition Operations

U.S. ARMY CORPS OF ENGINEERS (USACE)

EM 385-1-1	(2024) Safety -- Safety and Occupational Health (SOH) Requirements

U.S. NATIONAL ARCHIVES AND RECORDS ADMINISTRATION (NARA)

40 CFR 61	National Emission Standards for Hazardous Air Pollutants

1.2 PROJECT DESCRIPTION

1.2.1 Definitions

1.2.1.1 Demolition

Demolition is the process of tearing apart and removing any feature of a facility together with any related handling and disposal operations.

1.2.1.2 Demolition Plan

Demolition Plan is the planned steps and processes for managing demolition activities and identifying the required sequencing activities and disposal mechanisms.

1.2.2 Demolition/Deconstruction Plan

Prepare a Demolition Plan and submit proposed salvage, demolition, and removal procedures for approval before work is started. Include in the plan procedures for careful removal and disposition of materials specified to be salvaged, coordination with other work in progress. Coordinate with Waste Management Plan in accordance with Section 01 74 19 CONSTRUCTION WASTE MANAGEMENT AND DISPOSAL. Provide procedures for safe conduct of the work in accordance with EM 385-1-1. Plan must be approved by Contracting Officer prior to work beginning.

1.2.3 General Requirements

Do not begin demolition or deconstruction until authorization is received from the Contracting Officer. Remove rubbish and debris from the project site; do not allow accumulations inside or outside the building . The work includes demolition, , salvage of identified items and materials, and removal of resulting rubbish and debris. Remove rubbish and debris from Government property daily, unless otherwise directed. Store materials that cannot be removed daily in areas specified by the Contracting Officer. In the interest of occupational safety and health, perform the work in accordance with EM 385-1-1, Section 17, Demolition, and other applicable Sections.

1.3 ITEMS TO REMAIN IN PLACE

Comply with FAR 52.236-9 to protect existing vegetation, structures, equipment, utilities, and improvements. Coordinate the work of this section with all other work indicated. Construct and maintain shoring, bracing, and supports as required. Ensure that structural elements are not overloaded. Increase structural supports or add new supports as may be required as a result of any cutting, removal, or demolition work performed under this contract. Do not overload structural elements . Provide new supports and reinforcement for existing construction weakened by demolition, deconstruction, or removal work. Repairs, reinforcement, or structural replacement require approval by the Contracting Officer prior to performing such work.

1.3.1 Existing Construction Limits and Protection

Do not disturb existing construction beyond the extent indicated or necessary for installation of new construction. Provide temporary shoring and bracing for support of building components to prevent settlement or other movement. Provide protective measures to control accumulation and migration of dust and dirt in all work areas. Remove dust, dirt, and debris from work areas daily.

1.3.2 Weather Protection

For portions of the building to remain, protect building interior and materials and equipment from the weather at all times. Where removal of existing roofing is necessary to accomplish work, have materials and workmen ready to provide adequate and temporary covering of exposed areas.

1.3.3 Utility Service

Maintain existing utilities indicated to stay in service and protect against damage during demolition and deconstruction operations. Prior to start of work, utilities serving each area of alteration or removal will be shut off by the utility provider and disconnected and sealed by the Contractor .

1.3.4 Facilities

Protect electrical and mechanical services and utilities. Where removal of existing utilities is specified or indicated, provide approved barricades, temporary covering of exposed areas, and temporary services or connections for electrical and mechanical utilities. Floors, roofs, walls, columns, pilasters, and other structural components that are designed and constructed to stand without lateral support or shoring, and

are determined to be in stable condition, must remain standing without additional bracing, shoring, or lateral support until demolished or deconstructed, unless directed otherwise by the Contracting Officer. Ensure that no elements determined to be unstable are left unsupported and place and secure bracing, shoring, or lateral supports as may be required as a result of any cutting, removal, deconstruction, or demolition work performed under this contract.

1.4 BURNING

The use of burning at the project site for the disposal of refuse and debris will not be permitted . Where burning is permitted, adhere to federal, state, and local regulations.

1.5 AVAILABILITY OF WORK AREAS

Areas in which the work is to be accomplished will be available at contract award.

1.6 SUBMITTALS

Government approval is required for submittals with a "G" classification. Submittals not having a "G" classification are for information only. When used, a code following the "G" classification identifies the office that will review the submittal for the Government. Submit the following in accordance with Section 01 33 00 SUBMITTAL PROCEDURES:

SD-01 Preconstruction Submittals

Demolition Plan; G, RO

Existing Conditions

SD-07 Certificates

Notification; G, RO

SD-11 Closeout Submittals

Receipts

1.7 QUALITY ASSURANCE

Submit timely notification of demolition renovation projects to Federal, State, regional, and local authorities in accordance with 40 CFR 61, Subpart M. Comply with federal, state, and local hauling and disposal regulations. In addition to the requirements of the "Contract Clauses," conform to the safety requirements contained in ASSP A10.6. Comply with the Environmental Protection Agency requirements specified. Use of explosives will not be permitted.

1.7.1 Dust and Debris Control

Prevent the spread of dust and debris to occupied portions of the building and avoid the creation of a nuisance or hazard in the surrounding area. Do not use water if it results in hazardous or objectionable conditions such as, but not limited to, ice, flooding, or pollution. Sweep pavements as often as necessary to control the spread of debris that may result in foreign object damage potential to aircraft.

1.8 PROTECTION

1.8.1 Protection of Personnel

Before, during and after the demolition work continuously evaluate the condition of the structure being demolished and take immediate action to protect all personnel working in and around the project site. No area, section, or component of floors, roofs, walls, columns, pilasters, or other structural element will be allowed to be left standing without sufficient bracing, shoring, or lateral support to prevent collapse or failure while workmen remove debris or perform other work in the immediate area.

1.9 RELOCATIONS

Perform the removal and reinstallation of relocated items as indicated with workmen skilled in the trades involved. Repair or replace items to be relocated which are damaged by the Contractor with new undamaged items as approved by the Contracting Officer.

1.10 EXISTING CONDITIONS

Before beginning any demolition work, survey the site and examine the drawings and specifications to determine the extent of the work. Record existing conditions in the presence of the Contracting Officer or the Contracting Officer's Representative showing the condition of structures and other facilities adjacent to areas of alteration or removal. Photographs or electronic images with a minimum resolution of 3072 x 2304 pixels, capable of a print resolution of 300 dpi, will be acceptable as a record of existing conditions. Include in the record the elevation of the top of foundation walls, finish floor elevations, possible conflicting electrical conduits, plumbing lines, alarms systems, the location and extent of existing cracks and other damage and description of surface conditions that exist prior to starting work. It is the Contractor's responsibility to verify and document all required outages which will be required during the course of work, and to note these outages on the record document. Submit survey results to the Contracting Officer or the Contracting Officer's Representative.

PART 2 PRODUCTS

PART 3 EXECUTION

3.1 EXISTING FACILITIES TO BE REMOVED

Inspect and evaluate existing structures onsite for reuse. Disassemble existing construction scheduled to be removed for reuse. Dismantled and removed materials are to be separated, set aside, and prepared as specified, and stored or delivered to a collection point for reuse, remanufacture, recycling, or other disposal, as specified. Designate materials for reuse onsite whenever possible.

3.1.1 Utilities and Related Equipment

3.1.1.1 General Requirements

Do not interrupt existing utilities serving occupied or used facilities, except when authorized in writing by the Contracting Officer. Do not interrupt existing utilities serving facilities occupied and used by the

Government except when approved in writing and then only after temporary utility services have been approved and provided. Do not begin demolition or deconstruction work until all utility disconnections have been made. Shut off and cap utilities for future use, as indicated.

3.1.1.2 Disconnecting Existing Utilities

Remove existing utilities , as indicated and terminate in a manner conforming to the nationally recognized code covering the specific utility and approved by the Contracting Officer. When utility lines are encountered but are not indicated on the drawings, notify the Contracting Officer prior to further work in that area. Remove meters and related equipment and deliver to a location on the station in accordance with instructions of the Contracting Officer.

3.1.2 Patching

Where removals leave holes and damaged surfaces exposed in the finished work, patch and repair these holes and damaged surfaces to match adjacent finished surfaces, using on-site materials when available. Where new work is to be applied to existing surfaces, perform removals and patching in a manner to produce surfaces suitable for receiving new work. Make finished surfaces of patched area flush with the adjacent existing surface and match the existing adjacent surface as closely as possible to texture and finish.

3.1.3 Electrical Equipment and Fixtures

Salvage motors, motor controllers, and operating and control equipment that are attached to the driven equipment. Salvage wiring systems and components. Box loose items and tag for identification. Disconnect primary, secondary, control, communication, and signal circuits at the point of attachment to their distribution system.

3.1.3.1 Fixtures

Remove and salvage electrical fixtures. Salvage unprotected glassware from the fixture and salvage separately. Salvage incandescent, mercury-vapor, and fluorescent lamps and fluorescent ballasts manufactured prior to 1978, boxed and tagged for identification, and protected from breakage.

3.1.3.2 Electrical Devices

Remove and salvage switches, switchgear, transformers, conductors including wire and nonmetallic sheathed and flexible armored cable, regulators, meters, instruments, plates, circuit breakers, panelboards, outlet boxes, and similar items. Box and tag these items for identification according to type and size.

3.1.3.3 Wiring Ducts or Troughs

Remove and salvage wiring ducts or troughs. Dismantle plug-in ducts and wiring troughs into unit lengths. Remove plug-in or disconnecting devices from the busway and store separately.

3.1.3.4 Conduit and Miscellaneous Items

Salvage conduit except where embedded in concrete or masonry. Consider

corroded, bent, or damaged conduit as scrap metal. Sort straight and undamaged lengths of conduit according to size and type. Classify supports, knobs, tubes, cleats, and straps as debris to be removed and disposed.

3.2 DISPOSITION OF MATERIAL

3.2.1 Title to Materials

Except for salvaged items specified in related Sections, and for materials or equipment scheduled for salvage, all materials and equipment removed and not reused or salvaged, become the property of the Contractor and must be removed from Government property. Materials approved for storage by the Contracting Officer must be removed before completion of the contract. Title to materials resulting from demolition and deconstruction, and materials and equipment to be removed, is vested in the Contractor upon approval by the Contracting Officer. The Government will not be responsible for the condition or loss of, or damage to, such property after contract award. Showing for sale or selling materials and equipment on site is prohibited.

3.2.2 Reuse of Materials and Equipment

Remove and store materials and equipment indicated in the Architectural demolition drawing to be reused or relocated to prevent damage, and reinstall as the work progresses. Coordinate the re-use of materials and equipment with the re-use requirements in accordance with Section 01 74 19 CONSTRUCTION WASTE MANAGEMENT AND DISPOSAL. Capture re-use of materials in the diversion calculations for the project.

3.2.2.1 Interior Door Reuse

Remove interior door NO. 2 indicated in the Architectural demolition drawing. Reinstall door and frame and reconfigure door swing to swing inwards into the Open Area at the same opening. Reconfigure existing frame and hardware as required.

3.2.3 Unsalvageable and Non-Recyclable Material

Dispose of unsalvageable and non-recyclable noncombustible material in the disposal area located . Maintain the fill in the disposal area below elevation and after disposal is completed, uniformly grade the disposal area to drain. Dispose of unsalvageable and non-recyclable combustible material off the site .

3.3 CLEANUP

Remove debris and rubbish from project site and similar excavations. Remove and transport the debris in a manner that prevents spillage on streets or adjacent areas. Apply local regulations regarding hauling and disposal.

3.4 DISPOSAL OF REMOVED MATERIALS

3.4.1 Regulation of Removed Materials

Dispose of debris, rubbish, scrap, and other nonsalvageable materials resulting from removal operations with all applicable federal, state and local regulations as contractually specified in the Waste Management Plan .

Storage of removed materials on the project site is prohibited.

3.4.2 Burning on Government Property

Burning of materials removed from demolished and deconstructed structures will not be permitted on Government property .

3.4.3 Removal to Spoil Areas on Government Property

Transport noncombustible materials removed from demolition and deconstruction structures to designated spoil areas on Government property.

3.4.4 Removal from Government Property

Transport waste materials removed from demolished and deconstructed structures, except waste soil, from Government property for legal disposal. Dispose of waste soil as directed .

3.5 REUSE OF SALVAGED ITEMS

Recondition salvaged materials and equipment designated for reuse before installation. Replace items damaged during removal and salvage operations or restore them as necessary to usable condition.

-- End of Section --

This page was intentionally left blank for duplex printing.

SECTION TABLE OF CONTENTS

DIVISION 02 - EXISTING CONDITIONS

SECTION 02 82 00

ASBESTOS REMEDIATION

PART 1 GENERAL

1.1 REFERENCES
1.2 DEFINITIONS
1.2.1 Amended Water
1.2.2 Area Sampling
1.2.3 Asbestos
1.2.4 Asbestos Containing Material (ACM)
1.2.5 Asbestos Containing Construction Material (ACCM)
1.2.6 Asbestos Control Area
1.2.7 Asbestos Fibers
1.2.8 Asbestos Permissible Exposure Limit
1.2.9 Authorized Person
1.2.10 Background
1.2.11 Competent Person (CP)
1.2.12 Contractor
1.2.13 Disposal Bag
1.2.14 Disturbance
1.2.15 Encapsulation
1.2.16 Encapsulants
1.2.17 Friable Asbestos Material
1.2.18 Glovebag Technique
1.2.19 HEPA Filter Equipment
1.2.20 Model Accreditation Plan (MAP)
1.2.21 Negative Pressure Enclosure (NPE)
1.2.22 NESHAP
1.2.23 Nonfriable Asbestos Material
1.2.24 Permissible Exposure Limits (PELs)
1.2.24.1 PEL-Time Weighted Average(TWA)
1.2.24.2 PEL-Excursion Limit
1.2.25 Personal Sampling
1.2.26 Presumed ACM
1.2.27 Private Qualified Person (PQP)
1.2.28 TEM
1.2.29 Thermal System Insulation
1.2.30 Time Weighted Average (TWA)
1.2.31 Transite
1.2.32 Wetting Agent
1.2.33 Worker
1.3 REQUIREMENTS
1.3.1 Description of Work
1.3.2 Medical Requirements
1.3.2.1 Medical Examinations
1.3.2.2 Medical Records
1.3.3 Employee Training
1.3.4 Permits[, Licenses,] and Notifications

1.3.5 Environment, Safety and Health Compliance
1.3.6 Respiratory Protection Program
1.3.6.1 Respirator Program Records
1.3.6.2 Respirator Fit Testing
1.3.6.3 Respirator Selection and Use Requirements
1.3.7 Asbestos Hazard Control Supervisor
1.3.8 Hazard Communication
1.3.9 Asbestos Hazard Abatement Plan
1.3.10 Testing Laboratory
1.3.11 Landfill Approval
1.3.12 Transporter Certification
1.3.13 Medical Certification
1.4 SUBMITTALS
1.5 QUALITY ASSURANCE
1.5.1 Private Qualified Person Documentation
1.5.2 Designated Competent Person Documentation
1.5.3 Worker's License
1.5.4 Contractor's License
1.5.5 Air Sampling Results
1.5.6 Pressure Differential Recordings for Local Exhaust System
1.5.7 Federal, State or Local Citations on Previous Projects
1.5.8 Preconstruction Conference
1.6 SECURITY
1.7 EQUIPMENT
1.7.1 Rental Equipment

PART 2 PRODUCTS

2.1 ENCAPSULANTS
2.1.1 Removal Encapsulants
2.1.2 Bridging Encapsulant
2.1.3 Penetrating Encapsulant
2.1.4 Lock-down Encapsulant
2.2 ENCASEMENT PRODUCTS
2.3 DUCT TAPE
2.4 DISPOSAL CONTAINERS
2.5 SHEET PLASTIC
2.5.1 Flame Resistant
2.5.2 Reinforced
2.6 MASTIC REMOVING SOLVENT
2.7 LEAK-TIGHT WRAPPING
2.8 VIEWING INSPECTION WINDOW
2.9 WETTING AGENTS

PART 3 EXECUTION

3.1 EQUIPMENT
3.1.1 Air Monitoring Equipment
3.1.2 Respirators
3.1.2.1 Respirators for Handling Asbestos
3.1.3 Exterior Whole Body Protection
3.1.3.1 Outer Protective Clothing
3.1.3.2 Work Clothing
3.1.3.3 Personal Decontamination Unit
3.1.3.4 Eye Protection
3.1.4 Regulated Areas
3.1.5 Load-out Unit
3.1.6 Warning Signs and Labels
3.1.6.1 Warning Sign

3.1.6.2 Warning Labels
3.1.7 Local Exhaust System
3.1.8 Tools
3.1.9 Rental Equipment
3.1.10 Glovebags
3.1.11 Single Stage Decontamination Area
3.1.12 Decontamination Area Exit Procedures
3.2 WORK PROCEDURE
3.2.1 Building Ventilation System and Critical Barriers
3.2.2 Protection of Existing Work to Remain
3.2.3 Furnishings
3.2.4 Precleaning
3.2.5 Asbestos Control Area Requirements
3.2.5.1 Negative Pressure Enclosure
3.2.5.2 Glovebag
3.2.5.3 Regulated Area for Class II Removal
3.2.6 Removal Procedures
3.2.6.1 Sealing Contaminated Items Designated for Disposal
3.2.7 Methods of Compliance
3.2.7.1 Mandated Practices
3.2.7.2 Control Methods
3.2.7.3 Unacceptable Practices
3.2.8 Class I Work Procedures
3.2.9 Specific Control Methods for Class I Work
3.2.9.1 Negative Pressure Enclosure (NPE) System
3.2.9.2 Glovebag Systems
3.2.9.3 Mini-Enclosure
3.2.9.4 Wrap and Cut Operation
3.2.9.5 Class I Removal Method
3.2.10 Class II Work Procedures
3.2.11 Specific Control Methods for Class II Work
3.2.11.1 Vinyl and Asphaltic Flooring Materials Mastic
3.2.11.2 Sealants and Mastic
3.2.12 Air Sampling
3.2.12.1 Sampling Prior to Asbestos Work
3.2.12.2 Sampling During Asbestos Work
3.2.12.3 Final Clearance Requirements, NIOSH PCM Method
3.2.12.4 Final Clearance Requirements, EPA TEM Method
3.2.12.5 Sampling After Final Clean-Up (Clearance Sampling)
3.2.12.6 Air Clearance Failure
3.2.13 Lock-Down
3.2.14 Site Inspection
3.3 CLEAN-UP AND DISPOSAL
3.3.1 Housekeeping
3.3.2 Title to Materials
3.3.3 Disposal of Asbestos
3.3.3.1 Procedure for Disposal
3.3.3.2 Asbestos Disposal Quantity Report

-- End of Section Table of Contents --

SECTION 02 82 00

ASBESTOS REMEDIATION

PART 1 GENERAL

1.1 REFERENCES

The publications listed below form a part of this specification to the extent referenced. The publications are referred to within the text by the basic designation only.

AMERICAN SOCIETY OF SAFETY PROFESSIONALS (ASSP)

ASSP Z9.2	(2018) Fundamentals Governing the Design and Operation of Local Exhaust Ventilation Systems

ASTM INTERNATIONAL (ASTM)

ASTM D522/D522M	(2017; R 2021) Mandrel Bend Test of Attached Organic Coatings
ASTM D2794	(1993; R 2024) Standard Test Method for Resistance of Organic Coatings to the Effects of Rapid Deformation (Impact)
ASTM D4397	(2016; R 2023) Standard Specification for Polyethylene Sheeting for Construction, Industrial, and Agricultural Applications
ASTM E84	(2025) Standard Test Method for Surface Burning Characteristics of Building Materials
ASTM E96/E96M	(2024a) Standard Test Methods for Gravimetric Determination of Water Vapor Transmission Rate of Materials
ASTM E119	(2024) Standard Test Methods for Fire Tests of Building Construction and Materials
ASTM E736/E736M	(2019) Standard Test Method for Cohesion/Adhesion of Sprayed Fire-Resistive Materials Applied to Structural Members
ASTM E1368	(2023) Standard Practice for Visual Inspection of Asbestos Abatement Projects

COMPRESSED GAS ASSOCIATION (CGA)

CGA G-7	(2019) Standard for Compressed Air for Human Respiration; 6th Edition

INTERNATIONAL SAFETY EQUIPMENT ASSOCIATION (ISEA)

ANSI/ISEA Z87.1	(2025) Occupational and Educational Personal Eye and Face Protection Devices

NATIONAL FIRE PROTECTION ASSOCIATION (NFPA)

NFPA 701	(2023; ERTA 1 2023) Standard Methods of Fire Tests for Flame Propagation of Textiles and Films

NATIONAL INSTITUTE FOR OCCUPATIONAL SAFETY AND HEALTH (NIOSH)

NIOSH NMAM	(2020; 5th Ed) NIOSH Manual of Analytical Methods

U.S. ARMY CORPS OF ENGINEERS (USACE)

EM 385-1-1	(2024) Safety -- Safety and Occupational Health (SOH) Requirements

U.S. ENVIRONMENTAL PROTECTION AGENCY (EPA)

EPA 340/1-90-018	(1990) Asbestos/NESHAP Regulated Asbestos Containing Materials Guidance
EPA 560/5-85-024	(1985) Guidance for Controlling Asbestos-Containing Materials in Buildings (Purple Book)

U.S. NATIONAL ARCHIVES AND RECORDS ADMINISTRATION (NARA)

29 CFR 1910.147	The Control of Hazardous Energy (Lock Out/Tag Out)
29 CFR 1926.51	Sanitation
29 CFR 1926.59	Hazard Communication
29 CFR 1926.103	Respiratory Protection
29 CFR 1926.200	Accident Prevention Signs and Tags
29 CFR 1926.1101	Asbestos
40 CFR 61-SUBPART A	General Provisions
40 CFR 61-SUBPART M	National Emission Standard for Asbestos
40 CFR 763	Asbestos
42 CFR 84	Approval of Respiratory Protective Devices
49 CFR 107	Hazardous Materials Program Procedures
49 CFR 171	General Information, Regulations, and Definitions
49 CFR 172	Hazardous Materials Table, Special

	Provisions, Hazardous Materials Communications, Emergency Response Information, and Training Requirements
49 CFR 173	Shippers - General Requirements for Shipments and Packagings
49 CFR 174	Carriage by Rail

U.S. NAVAL FACILITIES ENGINEERING SYSTEMS COMMAND (NAVFAC)

NAVFAC P-502	(2017) Asbestos Program Management
ND OPNAV M-5100.23	(2020; Rev G) Navy Safety and Occupational Health Manual

UL SOLUTIONS (UL)

UL 586	(2009; Reprint Sep 2022) UL Standard for Safety High-Efficiency Particulate, Air Filter Units

1.2 DEFINITIONS

1.2.1 Amended Water

Water containing a wetting agent or surfactant with a maximum surface tension of 0.00042 psi.

1.2.2 Area Sampling

Sampling of asbestos fiber concentrations which approximates the concentrations of asbestos in the theoretical breathing zone but is not actually collected in the breathing zone of an employee.

1.2.3 Asbestos

The term asbestos includes chrysotile, amosite, crocidolite, tremolite, anthophyllite, and actinolite and any of these minerals that have been chemically treated or altered.

1.2.4 Asbestos Containing Material (ACM)

Any material which contains greater than 1 percent asbestos.

1.2.5 Asbestos Containing Construction Material (ACCM)

Any manufactured construction material which contains more than 1/10th of 1 percent asbestos by weight.

1.2.6 Asbestos Control Area

That area where asbestos removal operations are performed which is isolated by physical boundaries which assist in the prevention of the uncontrolled release of asbestos dust, fibers, or debris.

1.2.7 Asbestos Fibers

Those fibers having an aspect ratio of at least 3:1 and longer than 5

micrometers as determined by National Institute for Occupational Safety and Health (NIOSH) Method 7400.

1.2.8 Asbestos Permissible Exposure Limit

0.1 fibers per cubic centimeter of air as an 8-hour time weighted average measured in the breathing zone as defined by 29 CFR 1926.1101 or other Federal legislation having legal jurisdiction for the protection of workers health.

1.2.9 Authorized Person

Any person authorized by the Contractor and required by work duties to be present in the regulated areas.

1.2.10 Background

The ambient airborne asbestos concentration in an uncontaminated area as measured prior to any asbestos hazard abatement efforts. Background concentrations for other (contaminated) areas are measured in similar but asbestos free locations.

1.2.11 Competent Person (CP)

A person meeting the requirements for competent person as specified in 29 CFR 1926.1101 including a person capable of identifying existing asbestos hazards in the workplace and selecting the appropriate control strategy for asbestos exposure, who has the authority to take prompt corrective measures to eliminate them, and is specifically trained in a training course which meet the criteria of EPA's Model Accreditation Plan (40 CFR 763) for project designer or supervisor, or its equivalent.[The competent person must have a current State of [_____] asbestos contractors or supervisors license.]

1.2.12 Contractor

The Contractor is that individual, or entity under contract to perform the herein listed work.

1.2.13 Disposal Bag

A 6 mil thick, leak-tight plastic bag, pre-labeled in accordance with 29 CFR 1926.1101 or applicable state regulations, used for transporting asbestos waste from containment to disposal site.

1.2.14 Disturbance

Activities that disrupt the matrix of ACM[and][or][ACCM], crumble or pulverize ACM[and][or][ACCM], or generate visible debris from ACM[and][or][ACCM]. Disturbance includes cutting away small amounts of ACM[and][or][ACCM], no greater than the amount which can be contained in one standard sized glovebag or waste bag, not larger than 60 inches in length and width or as required by state or local regulations in order to access a building component.

1.2.15 Encapsulation

The abatement of an asbestos hazard through the appropriate use of a physical barrier or chemical encapsulants.

1.2.16 Encapsulants

Specific materials in various forms used to chemically or physically entrap asbestos fibers in various configurations to prevent these fibers from becoming airborne. There are four types of encapsulants as follows which must comply with performance requirements as specified herein.

a. Removal Encapsulant (can be used as a wetting agent)

b. Bridging Encapsulant (used to provide a tough, durable surface coating to asbestos containing material)

c. Penetrating Encapsulant (used to penetrate the asbestos containing material encapsulating all asbestos fibers and preventing fiber release due to routine mechanical damage)

d. Lock-Down Encapsulant (used to seal off or "lock-down" minute asbestos fibers left on surfaces from which asbestos containing material has been removed).

1.2.17 Friable Asbestos Material

A term defined in 40 CFR 61-SUBPART M and EPA 340/1-90-018 meaning any material which contains more than 1 percent asbestos, as determined using the method specified in 40 CFR 763, Polarized Light Microscopy (PLM), that when dry, can be crumbled, pulverized, or reduced to powder by hand pressure.

1.2.18 Glovebag Technique

Those asbestos removal and control techniques put forth in 29 CFR 1926.1101.

1.2.19 HEPA Filter Equipment

High efficiency particulate air (HEPA) filtered vacuum and exhaust ventilation equipment with a filter system capable of collecting and retaining asbestos fibers. Filters must retain 99.97 percent of particles 0.3 microns or larger as indicated in UL 586.

1.2.20 Model Accreditation Plan (MAP)

USEPA training accreditation requirements for persons who work with asbestos as specified in 40 CFR 763.

1.2.21 Negative Pressure Enclosure (NPE)

That engineering control technique described as a negative pressure enclosure in 29 CFR 1926.1101 or applicable state regulations.

1.2.22 NESHAP

National Emission Standards for Hazardous Air Pollutants. The USEPA NESHAP regulation for asbestos is at 40 CFR 61-SUBPART M. Requirements associated with demolition and renovation activities are found in Section 61.145 of the NESHAP while requirements associated with waste disposal are found in Section 61.150.

1.2.23 Nonfriable Asbestos Material

Material that contains asbestos in which the fibers have been immobilized by a bonding agent, coating, binder, or other material so that the asbestos fibers are not normally released during appropriate use, handling, storage or transportation. It is understood that asbestos fibers may be released under other conditions such as demolition, removal, or mishap.

1.2.24 Permissible Exposure Limits (PELs)

1.2.24.1 PEL-Time Weighted Average(TWA)

Concentration of asbestos not in excess of 0.1 fibers per cubic centimeter of air (f/cc) as an 8-hour time weighted average (TWA).

1.2.24.2 PEL-Excursion Limit

An airborne concentration of asbestos not in excess of 1.0 f/cc of air as averaged over a sampling period of 30 minutes.

1.2.25 Personal Sampling

Air sampling which is performed to determine asbestos fiber concentrations within the breathing zone of a specific employee, as performed in accordance with 29 CFR 1926.1101.

1.2.26 Presumed ACM

Any material which cannot be sampled at the time of the initial inspection due to inaccessibility, structural or safety concerns (such as charged electrical components), or could void active warranties (such as roofing materials). Presumed ACM must be managed as ACM unless proven to not be ACM through testing by a qualified and certified asbestos professional.

1.2.27 Private Qualified Person (PQP)

A Registered Architect, Professional Engineer, Certified Industrial Hygienist, consultant or other qualified person who has successfully completed training and is therefore accredited under a legitimate State Model Accreditation Plan as described in 40 CFR 763 as a Building Inspector, Contractor/Supervisor Abatement Worker, and Asbestos Project Designer. The PQP that collects samples and elects to analyze samples on site must successfully complete the National Institute of Occupational Safety and Health (NIOSH) 582 course "Sampling and Evaluating Airborne Asbestos Dust" or equivalent, and must participate in the American Industrial Hygiene Association (AIHA) Asbestos Analysis Registry (AAR).[The PQP must be appropriately licensed in the State of [_____].]

1.2.28 TEM

Refers to Transmission Electron Microscopy.

1.2.29 Thermal System Insulation

Thermal system insulation (TSIACM applied to pipes, fittings, boilers, breeching, tanks, ducts or other structural components to prevent heat loss or gain.

1.2.30 Time Weighted Average (TWA)

The TWA is an 8-hour time weighted average airborne concentration of asbestos fibers.

1.2.31 Transite

A generic name for asbestos cement wallboard and pipe.

1.2.32 Wetting Agent

A chemical added to water to reduce the water's surface tension thereby increasing the water's ability to soak into the material to which it is applied. An equivalent wetting agent must have a surface tension of at most 0.00042 psi.

1.2.33 Worker

Individual (not designated as the Competent Person or a supervisor) who performs asbestos work and has completed asbestos worker training required by 29 CFR 1926.1101, to include EPA Model Accreditation Plan (MAP) "Worker" training; accreditation, if required by the OSHA Class of work to be performed or by the state where the work is to be performed.[The worker must be appropriately licensed in the State of [_____].]

1.3 REQUIREMENTS

1.3.1 Description of Work

The work covered by this section includes the handling and control of asbestos containing materials and describes some of the resultant procedures and equipment required to protect workers, the environment and occupants of the building or area, or both, from contact with airborne asbestos fibers. The work also includes the disposal of any asbestos containing materials generated by the work. More specific operational procedures must be outlined in the Asbestos Hazard Abatement Plan called for elsewhere in this specification. The asbestos work includes the removal of floor tile located in the office within the scope renovation area. Under normal conditions non-friable or chemically bound materials containing asbestos would not be considered hazardous; however, this material may release airborne asbestos fibers during demolition and removal and therefore must be handled in accordance with the removal and disposal procedures as specified herein. Provide techniques as outlined in this specification. The work area must be evacuated during the asbestos abatement work. A competent person must supervise asbestos removal work as specified herein.

1.3.2 Medical Requirements

Provide medical requirements including but not limited to medical surveillance and medical record keeping as listed in 29 CFR 1926.1101.

1.3.2.1 Medical Examinations

Contractor must submit documentation of workers who perform activities potentially impacted[ACM][ACCM] including the name of each employee, type of exam received, and date of the exam. The documentation must also include a signed statement that the medical examination was reviewed by the contractor's[Safety Manager][and][Industrial Hygienist] stating

that the listed personnel have received the required medical examination in accordance with 29 CFR 1926.1101 and the exam results are saved. This requirement must have been satisfied within the 12 months prior to the start of work on this contract. The same medical examination must be given on an annual basis to employees engaged in an occupation involving asbestos and within 30 calendar days before or after the termination of employment in such occupation. Specifically identify x-ray films of asbestos workers to the consulting radiologist and mark medical record jackets with the word "ASBESTOS."

1.3.2.2 Medical Records

Maintain complete and accurate records of employees' medical examinations, medical records, and exposure data for a period of[30 years][indefinite time] after termination of employment and make records of the required medical examinations and exposure data available for inspection and copying to: The Assistant Secretary of Labor for Occupational Safety and Health (OSHA), or authorized representatives of them, and an employee's physician upon the request of the employee or former employee.

1.3.3 Employee Training

Submit certificates, prior to the start of work but after the main abatement submittal, signed by each employee indicating that the employee has received training in the proper handling of materials and wastes that contain asbestos in accordance with 40 CFR 763; understands the health implications and risks involved, including the illnesses possible from exposure to airborne asbestos fibers; understands the use and limits of the respiratory equipment to be used; and understands the results of monitoring of airborne quantities of asbestos as related to health and respiratory equipment as indicated in 29 CFR 1926.1101 on an initial and annual basis. Organize certificates by individual worker, not grouped by type of certification. Make training requirement records readily available in accordance with 40 CFR 763. Train personnel involved in the asbestos control work in accordance with United States Environmental Protection Agency (USEPA) Asbestos Hazard Emergency Response Act (AHERA) training criteria or State training criteria whichever is more stringent. Document the training by providing: dates of training, training entity, course outline, names of instructors, and qualifications of instructors upon request by the Contracting Officer. Furnish each employee with respirator training and fit testing administered by the PQP as required by 29 CFR 1926.1101 and 29 CFR 1926.103. Fully cover engineering and other hazard control techniques and procedures. Asbestos workers must have a current State of South Dakota asbestos worker's license.

1.3.4 Permits[, Licenses,] and Notifications

Prior to the start of work, obtain necessary permits[and licenses] in conjunction with asbestos removal, encapsulation, hauling, and disposition, and furnish notification of such actions required by Federal, State, regional, and local authorities. Notify the[Regional Office of the United States Environmental Protection Agency (USEPA)][State's environmental protection agency][local air pollution control district/agency][local/City Asbestos Control Bureau] and the Contracting Officer in writing [10][20][_____] working days prior to commencement of work in accordance with 40 CFR 61-SUBPART M[and [_____]]. Notify the Contracting Officer and other appropriate Government agencies in writing 20 working days prior to the start of asbestos work as indicated in applicable laws, ordinances, criteria, rules, and regulations. Submit

copies of all Notifications to the Contracting Officer.[Notify the local fire department 3 days prior to removing fire-proofing material from the building including notice that the material contains asbestos.]

1.3.5 Environment, Safety and Health Compliance

In addition to detailed requirements of this specification, comply with those applicable laws, ordinances, criteria, rules, and regulations of Federal, State, regional, and local authorities regarding handling, storing, transporting, and disposing of asbestos waste materials. Comply with the applicable requirements of the current issue of EM 385-1-1, 29 CFR 1926.1101, 40 CFR 61-SUBPART A, 40 CFR 61-SUBPART M, 40 CFR 763 and ND OPNAV M-5100.23. Submit matters of interpretation of standards to the appropriate administrative agency for resolution before starting the work. Where the requirements of this specification, applicable laws, rules, criteria, ordinances, regulations, and referenced documents vary, the most stringent requirement as defined by the Government apply. The following laws, ordinances, criteria, rules and regulations regarding removal, handling, storing, transporting and disposing of asbestos materials apply:

a. [_____]

b. [_____]

c. [_____].

1.3.6 Respiratory Protection Program

Establish and implement a respirator program as required by 29 CFR 1926.1101, and 29 CFR 1926.103 and applicable state and local regulations. Submit a written description of the program to the Contracting Officer. Submit a written program manual or operating procedure including methods of compliance with regulatory statutes.

1.3.6.1 Respirator Program Records

Submit records of the respirator program as required by 29 CFR 1926.103, and 29 CFR 1926.1101.

1.3.6.2 Respirator Fit Testing

The Contractor's PQP must conduct a qualitative or quantitative fit test conforming to 29 CFR 1926.103 for each worker required to wear a respirator, and any authorized visitors who enter a regulated area where respirators are required to be worn. A respirator fit test must be performed prior to initially wearing a respirator and every 12 months thereafter. If physical changes develop that affects the fit, a new fit test must be performed. Functional fit checks must be performed each time a respirator is put on and in accordance with the manufacturer's recommendation.

1.3.6.3 Respirator Selection and Use Requirements

Provide respirators, and ensure that they are used as required by 29 CFR 1926.1101 and in accordance with CGA G-7 and the manufacturer's recommendations. Respirators must be approved by the National Institute for Occupational Safety and Health NIOSH, under the provisions of 42 CFR 84, for use in environments containing airborne asbestos fibers. For

air-purifying respirators, the particulate filter must be high-efficiency particulate air (HEPA)/(N-,R-,P-100). The initial respirator selection and the decisions regarding the upgrading or downgrading of respirator type must be made by the Contractor's Designated IH based on the measured or anticipated airborne asbestos fiber concentrations to be encountered.

1.3.7 Asbestos Hazard Control Supervisor

The Contractor must be represented on site by a supervisor, trained using the model Contractor accreditation plan as indicated in the Federal statutes for all portions of the herein listed work.

1.3.8 Hazard Communication

Adhere to all parts of 29 CFR 1926.59 and provide the Contracting Officer with a copy of the Safety Data Sheets (SDS) for all materials brought to the site.

1.3.9 Asbestos Hazard Abatement Plan

Submit a detailed plan of the safety precautions such as lockout, tagout, tryout, fall protection, and confined space entry procedures and equipment and work procedures to be used in the removal of materials containing asbestos. The plan, not to be combined with other hazard abatement plans, must be prepared, signed, and sealed by the PQP. Provide a Table of Contents for each abatement submittal, which follows the sequence of requirements in the contract. The plan must include but not be limited to the precise personal protective equipment to be used including, but not limited to, respiratory protection, type of whole-body protection, the location of asbestos control areas including clean and dirty areas, buffer zones, showers, storage areas, change rooms, removal method, interface of trades involved in the construction, sequencing of asbestos related work, disposal plan, type of wetting agent and asbestos sealer to be used, locations of local exhaust equipment, planned air monitoring strategies, and a detailed description of the method to be employed in order to control environmental pollution. The plan must also include (both fire and medical emergency) response plans and an Activity Hazard Analyses (AHAs) in accordance with EM 385-1-1. The Asbestos Hazard Abatement Plan must be approved in writing prior to starting any asbestos work. The Contractor, Asbestos Hazard Control Supervisor, CP and PQP must meet with the Contracting Officer prior to beginning work, to discuss in detail the Asbestos Hazard Abatement Plan, including work procedures and safety precautions. Once approved by the Contracting Officer, the plan will be enforced as if an addition to the specification. Any changes required in the specification as a result of the plan must be identified specifically in the plan to allow for free discussion and approval by the Contracting Officer prior to starting work.

1.3.10 Testing Laboratory

Submit the name, address, telephone number, and appliable laboratory certification(s) of each testing laboratory selected for the sampling, analysis, and reporting of airborne concentrations of asbestos fibers along with[evidence that each laboratory selected holds the appropriate State license and permits and] certification that each laboratory is American Industrial Hygiene Association (AIHA) accredited and that persons counting the samples have been judged proficient by current inclusion on the AIHA Asbestos Analysis Registry (AAR) and successful participation of the laboratory in the Proficiency Analytical Testing (PAT) Program. Where

analysis to determine asbestos content in bulk materials or transmission electron microscopy is required, submit evidence that the laboratory is accredited by the National Institute of Science and Technology (NIST) under National Voluntary Laboratory Accreditation Program (NVLAP) for asbestos analysis. The testing laboratory firm must be independent of the asbestos contractor and must have no employee or employer relationship which could constitute a conflict of interest.

1.3.11 Landfill Approval

Submit written evidence that the landfill is approved for asbestos disposal by the[U.S. Environmental Protection Agency, Region [_____], Air Enforcement Section [(38W12)][_____],][and][local regulatory authority [_____], regulation [_____]]. Within three working days after delivery, submit detailed delivery tickets, prepared, signed, and dated by an agent of the landfill, certifying the amount of asbestos materials delivered to the landfill. Submit a copy of the waste shipment records within one day of the shipment leaving the project site.

1.3.12 Transporter Certification

Submit written evidence that the transporter is approved to transport asbestos waste in accordance with the DOT requirements of 49 CFR 171, 49 CFR 172, 49 CFR 173,[and][49 CFR 174 and IMDG DGR for water transportation][and][IATA DGR for air transportation] as well as registration requirements of 49 CFR 107 and all other State and local regulatory agency requirements.

1.3.13 Medical Certification

Provide a written certification for each worker and supervisor, signed by a licensed physician indicating that the worker and supervisor has met or exceeded all of the medical prerequisites listed herein and in 29 CFR 1926.1101 and 29 CFR 1926.103 as prescribed by law. Submit certificates prior to the start of work but after the main abatement submittal.

1.4 SUBMITTALS

Government approval is required for submittals with a "G" classification. Submittals not having a "G" classification are for information only. When used, a code following the "G" classification identifies the office that will review the submittal for the Government. Submit the following in accordance with Section 01 33 00 SUBMITTAL PROCEDURES:

SD-03 Product Data

Amended Water; G, [_____]

Safety Data Sheets (SDS) for All Materials; G, [_____]

Encapsulants; G, [_____]

Respirators; G, [_____]

Local Exhaust Equipment; G, [_____]

Pressure Differential Automatic Recording Instrument; G, [_____]

Vacuums; G, [_____]

[Glovebags; G, [_____]

] SD-06 Test Reports

Air Sampling Results; G, [_____]

Pressure Differential Recordings for Local Exhaust System; G, [_____]

[Encapsulation Test Patches; G, [_____]

] Clearance Sampling; G, [_____]

Asbestos Disposal Quantity Report; G, [_____]

SD-07 Certificates

Employee Training; G, [_____]

Notifications; G, [_____]

Respiratory Protection Program; G, [_____]

Asbestos Hazard Abatement Plan; G, [_____]

Testing Laboratory; G, [_____]

Landfill Approval; G, [_____]

Delivery Tickets; G, [_____]

Waste Shipment Records; G, [_____]

Transporter Certification; G, [_____]

Medical Certification; G, [_____]

Private Qualified Person Documentation; G, [_____]

Designated Competent Person; G, [_____]

Worker's License; G, [_____]

Contractor's License; G, [_____]

Federal, State or Local Citations on Previous Projects; G, [_____]

Encapsulants; G, [_____]

Equipment Used to Contain Airborne Asbestos Fibers; G, [_____]

Water Filtration Equipment; G, [_____]

Vacuums; G, [_____]

Ventilation Systems; G, [_____]

SD-11 Closeout Submittals

Permits[and Licenses]; G, [_____]

Notifications; G, [_____]

Respirator Program Records; G, [_____]

Rental Equipment; G, [_____]

1.5 QUALITY ASSURANCE

1.5.1 Private Qualified Person Documentation

Submit the name, address, and telephone number of the PQP selected to prepare the Asbestos Hazard Abatement Plan, direct monitoring and training, and documented evidence that the PQP has successfully completed training in and is accredited and where required is certified as, a Building Inspector, Contractor/Supervisor Abatement Worker, and Asbestos Project Designer as described by 40 CFR 763 and has successfully completed the National Institute of Occupational Safety and Health (NIOSH) 582 course "Sampling and Evaluating Airborne Asbestos Dust" or equivalent.[The PQP must be appropriately licensed in the State of [_____] as a Project Monitor]. The PQP and the asbestos contractor must not have an employee/employer relationship or financial relationship which could constitute a conflict of interest. The PQP must be a first tier subcontractor.

1.5.2 Designated Competent Person Documentation

The Designated Competent Person must be experienced in the administration and supervision of asbestos abatement projects including exposure assessment and monitoring, work practices, abatement methods, protective measures for personnel, setting up and inspecting asbestos abatement work areas, evaluating the integrity of containment barriers, placement and operation of local exhaust systems, ACM generated waste containment and disposal procedures, decontamination units installation and maintenance requirements, site safety and health requirements, notification of other employees onsite, [_____]. The Designated Competent Person must be on-site at all times when asbestos abatement activities are underway.Submit training certification and a current State of [_____] Asbestos Contractor's and Supervisor's License. Submit evidence that the Designated Competent Person has a minimum of [2][_____] years of on-the-job asbestos abatement experience relevant to OSHA designated competent person requirements. The Designated Competent Person must be a first tier subcontractor.

1.5.3 Worker's License

Submit documentation that workers meet the requirements of 29 CFR 1926.1101, 40 CFR 61-SUBPART M and have a current State of [_____] Asbestos Workers License.

1.5.4 Contractor's License

Submit a copy of the asbestos contractor's license issued by the State of [_____]. Submit the following certification along with the license: "I certify that the personnel I am responsible for during the course of this project fully understand the contents of 29 CFR 1926.1101, 40 CFR 61-SUBPART MEM 385-1-1, and the Federal, State and local

requirements for those asbestos abatement activities that they will be involved in." This certification statement must be signed by the Company's President or Chief Executive.

1.5.5 Air Sampling Results

Complete fiber counting and provide results to the PQP for review within 16 hours of the "time off" of the sample pump. Notify the Contracting Officer immediately of any airborne levels of asbestos fibers in excess of the acceptable limits. Submit sampling results to the Contracting Officer and the affected Contractor employees where required by law within three working days, signed by the testing laboratory employee performing air sampling, the employee that analyzed the sample, and the PQP. Notify the Contractor and the Contracting Officer immediately of any variance in the pressure differential which could cause adjacent unsealed areas to have asbestos fiber concentrations in excess of 0.01 fibers per cubic centimeter or background whichever is higher. In no circumstance must levels exceed 0.1 fibers per cubic centimeter.

1.5.6 Pressure Differential Recordings for Local Exhaust System

Provide a local exhaust system that creates a negative pressure of at least 0.02 inches of water relative to the pressure external to the enclosure and operate it continuously, 24-hours a day, until the temporary enclosure of the asbestos control area is removed. Submit pressure differential recordings for each work day to the PQP for review and to the Contracting Officer within 24-hours from the end of each work day.

1.5.7 Federal, State or Local Citations on Previous Projects

Submit a statement, signed by an officer of the company, containing a record of any citations issued by Federal, State or local regulatory agencies relating to asbestos activities within the last 5 years (including projects, dates, and resolutions); a list of penalties incurred through non-compliance with asbestos project specifications, including liquidated damages, overruns in scheduled time limitations and resolutions; and situations in which an asbestos-related contract has been terminated (including projects, dates, and reasons for terminations). If there are none, a negative declaration signed by an officer of the company must be provided.

1.5.8 Preconstruction Conference

Conduct a safety preconstruction conference to discuss the details of the Asbestos Hazard Abatement Plan, Accident Prevention Plan (APP) including the AHAs required in specification Section 01 35 26 GOVERNMENTAL SAFETY REQUIREMENTS . The safety preconstruction conference must include the Contractor and their Designated Competent Person, Designated IH and Project Supervisor and the Contracting Officer. Deficiencies in the APP must be discussed. Onsite work must not begin until the APP has been accepted.

1.6 SECURITY

A log book must be kept documenting entry into and out of the regulated area. Entry into regulated areas must only be by personnel authorized by the Contractor and the Contracting Officer. Personnel authorized to enter regulated areas must be trained, medically evaluated, and wear the required personal protective equipment.

1.7 EQUIPMENT

1.7.1 Rental Equipment

Provide a copy of the written notification to the rental company concerning the intended use of the equipment and the possibility of asbestos contamination of the equipment.

PART 2 PRODUCTS

2.1 ENCAPSULANTS

Encapsulants must conform to current USEPA requirements, contain no toxic or hazardous substances as defined in 29 CFR 1926.59, and conform to the following performance requirements.

2.1.1 Removal Encapsulants

Requirement	Test Standard
Flame Spread - 25, Smoke Emission - 50	ASTM E84
Life Expectancy - 20 years	Warranted by the manufacturer to perform for at least 20 years as a durable barrier in the environment and conditions similar to the planned application
Permeability - Minimum 0.4 perms	ASTM E96/E96M
Fire Resistance - Negligible affect on fire resistance rating over 3 hour test (Classified by UL for use over fibrous and cementitious sprayed fireproofing)	ASTM E119
Impact Resistance - Minimum 43 in/lb	ASTM D2794 Gardner Impact Test
Flexibility - no rupture or cracking	ASTM D522/D522M Mandrel Bend Test

2.1.2 Bridging Encapsulant

Requirement	Test Standard
Flame Spread - 25, Smoke Emission - 50	ASTM E84
Life Expectancy - 20 years	Warranted by the manufacturer to perform for at least 20 years as a durable barrier in the environment and conditions similar to the planned application

Requirement	Test Standard
Permeability - Minimum 0.4 perms	ASTM E96/E96M
Fire Resistance - Negligible affect on fire resistance rating over 3-hour test (Classified by UL for use over fibrous and cementitious sprayed fireproofing)	ASTM E119
Impact Resistance - Minimum 43 in/lb	ASTM D2794 Gardner Impact Test
Flexibility - no rupture or cracking	ASTM D522/D522M Mandrel Bend Test

2.1.3 Penetrating Encapsulant

Requirement	Test Standard
Flame Spread - 25, Smoke Emission - 50	ASTM E84
Life Expectancy - 20 years	Warranted by the manufacturer to perform for at least 20 years as a durable barrier in the environment and conditions similar to the planned application
Permeability - Minimum 0.4 perms	ASTM E96/E96M
Cohesion/Adhesion Test - 50 pounds of force/foot	ASTM E119
Fire Resistance - Negligible affect on fire resistance rating over 3-hour test (Classified by UL for use over fibrous and cementitious sprayed fireproofing)	ASTM E119
Impact Resistance - Minimum 43 in/lb	ASTM D2794 Gardner Impact Test
Flexibility - no rupture or cracking	ASTM D522/D522M Mandrel Bend Test

2.1.4 Lock-down Encapsulant

Requirement	Test Standard
Flame Spread - 25, Smoke Emission - 50	ASTM E84
Life Expectancy - 20 years	Warranted by the manufacturer to perform for at least 20 years as a durable barrier in the environment and conditions similar to the planned application
Permeability - Minimum 0.4 perms	ASTM E96/E96M
Fire Resistance - Negligible affect on fire resistance rating over 3-hour test (Tested with fireproofing over encapsulant applied directly to steel member)	ASTM E119
Bond Strength: 100 pounds of force/foot	ASTM E736/E736M
(Tests compatibility with cementitious and fibrous fireproofing)	

[2.2 ENCASEMENT PRODUCTS

Encasement must consist of primary cellular polymer coat, polymer finish coat, and any other finish coat as approved by the Contracting Officer.

]2.3 DUCT TAPE

Industrial grade duct tape of appropriate widths suitable for bonding sheet plastic and disposal container.

2.4 DISPOSAL CONTAINERS

Leak-tight (defined as solids, liquids, or dust that cannot escape or spill out) disposal containers must be provided for ACM wastes[, and presumed ACM wastes,] as required by 29 CFR 1926.1101 and state and local regulatory requirements. Disposal containers can be in the form of:

a. Disposal Bags

b. Fiberboard Drums

c. Cardboard Boxes

2.5 SHEET PLASTIC

Sheet plastic must be polyethylene of 6 mil minimum thickness and must be provided in the largest sheet size necessary to minimize seams. Film must be clear, frosted or black and conform to ASTM D4397, except as specified below

2.5.1 Flame Resistant

Where a potential for fire exists, flame-resistant sheets must be provided. Film must be [frosted][or][black] and must conform to the requirements of NFPA 701.

2.5.2 Reinforced

Reinforced sheets must be provided where high skin strength is required, such as where it constitutes the only barrier between the regulated area and the outdoor environment. The sheet stock must consist of translucent, nylon-reinforced or woven-polyethylene thread laminated between two layers of polyethylene film. Film must meet flame resistant standards of NFPA 701.

2.6 MASTIC REMOVING SOLVENT

Mastic removing solvent must be nonflammable and must not contain methylene chloride, glycol ether, or halogenated hydrocarbons. Solvents used onsite must have a flash point greater than 140 degrees F.

Prior to approving the use of mastic removing solvent for renovation projects where a new material is placed on the treated surface, the treated surface with mastic removing solvent must be completely removed. Remaining mastic removing solvent may react with glues and mastic of the new product.

2.7 LEAK-TIGHT WRAPPING

Two layers of 6 mil minimum thick polyethylene sheet stock must be used for the containment of removed asbestos-containing components or materials such as large tanks, boilers, insulated pipe segments and other materials. Upon placement of the ACM component or material, each layer must be individually leak-tight sealed with duct tape.

2.8 VIEWING INSPECTION WINDOW

Where feasible, a minimum of one clear, 1/8 inch thick, acrylic sheet, 18 by 24 inches, must be installed as a viewing inspection window at eye level on a wall in each containment enclosure. The windows must be sealed leak-tight with industrial grade duct tape.

2.9 WETTING AGENTS

Removal encapsulant (a penetrating encapsulant) must be provided when conducting removal abatement activities that require a longer removal time or are subject to rapid evaporation of[amended] water. The removal encapsulant must be capable of wetting the ACM and retarding fiber release during disturbance of the ACM greater than or equal to that provided by amended water. Performance requirements for penetrating encapsulants are specified in paragraph ENCAPSULANTS above.

PART 3 EXECUTION

3.1 EQUIPMENT

Provide the Contracting Officer or the Contracting Officer's Representative, with at least two complete sets of personal protective equipment including reusable coveralls with an outer disposable full body

cover as required for entry to and inspection of the asbestos control area. Provide equivalent training to the Contracting Officer or a designated representative as provided to Contractor employees in the use of the required personal protective equipment. Provide manufacturer's certificate of compliance for all equipment used to contain airborne asbestos fibers.

3.1.1 Air Monitoring Equipment

The Contractor's PQP must approve air monitoring equipment. The equipment must include, but must not be limited to:

a. High-volume sampling pumps that can be calibrated and operated at a constant airflow up to 16 liters per minute.

b. Low-volume, battery powered, body-attachable, portable personal pumps that can be calibrated to a constant airflow up to approximately 3.5 liters per minute, and a self-contained rechargeable power pack capable of sustaining the calibrated flow rate for a minimum of 10 hours. The pumps must also be equipped with an automatic flow control unit which must maintain a constant flow, even as filter resistance increases due to accumulation of fiber and debris on the filter surface.

c. Single use standard 25 mm diameter cassette, open face, 0.8 micron pore size, mixed cellulose ester membrane filters and cassettes with 50 mm electrically conductive extension cowl, and shrink bands for personal air sampling.

[d. Single use standard 25 mm diameter cassette, open face, 0.45 micron pore size, mixed cellulose ester membrane filters and cassettes with 50 mm electrically conductive cowl, and shrink bands when conducting environmental area sampling using NIOSH NMAM Methods 7400 and 7402, (and the transmission electric microscopy method specified at 40 CFR 763 if required).

] e. A flow calibrator capable of calibration to within plus or minus 2 percent of reading over a temperature range of minus 4 to plus 140 degrees F and traceable to a NIST primary standard.

3.1.2 Respirators

Select respirators from those approved by the National Institute for Occupational Safety and Health (NIOSH), Department of Health and Human Services.

3.1.2.1 Respirators for Handling Asbestos

Provide personnel engaged in pre-cleaning, cleanup, handling, removal and demolition of asbestos materials with respiratory protection as indicated in 29 CFR 1926.1101 and 29 CFR 1926.103. Breathing air must comply with CGA G-7.

3.1.3 Exterior Whole Body Protection

3.1.3.1 Outer Protective Clothing

Provide personnel exposed to asbestos with disposable "non-breathable," whole body outer protective clothing, head coverings, gloves, and foot

coverings. Provide disposable plastic or rubber gloves to protect hands. Cloth gloves may be worn inside the plastic or rubber gloves for comfort, but must not be used alone. Make sleeves secure at the wrists, make foot coverings secure at the ankles, and make clothing secure at the neck by the use of tape.

3.1.3.2 Work Clothing

Provide cloth work clothes for wear under the outer protective clothing and foot coverings and either dispose of or properly decontaminate them as recommended by the PQP after each use.

3.1.3.3 Personal Decontamination Unit

Provide a temporary, negative pressure unit with a separate decontamination locker room and clean locker room with a shower that complies with 29 CFR 1926.51(f)(4)(ii) through (V) in between for personnel required to wear whole body protective clothing. Provide two separate lockers for each asbestos worker, one in each locker room. Keep street clothing and street shoes in the clean locker. HEPA vacuum and remove asbestos contaminated disposable protective clothing while still wearing respirators at the boundary of the asbestos work area and seal in impermeable bags or containers for disposal. Do not wear work clothing between home and work. Locate showers between the decontamination locker room and the clean locker room and require that all employees shower before changing into street clothes. Collect used shower water and filter with approved water filtration equipment to remove asbestos contamination. Wastewater filters must be installed in series with the first stage pore size [20][_____] microns and the second stage pore size of [5][_____] microns. Dispose of filters and residue as asbestos waste. Discharge clean water to the sanitary system. Dispose of asbestos contaminated work clothing as asbestos contaminated waste. Keep the floor of the decontamination unit's clean room dry and clean at all times. Proper housekeeping and hygiene requirements must be maintained. Provide soap and towels for showering, washing and drying. Cloth towels provided must be disposed of as ACM waste. Physically attach the decontamination units to the asbestos control area. Construct both a personnel decontamination unit and an equipment decontamination unit onto and integral with each asbestos control area.

3.1.3.4 Eye Protection

Provide eye protection that complies with ANSI/ISEA Z87.1 when operations present a potential eye injury hazard. Provide goggles to personnel engaged in asbestos abatement operations when the use of a full face respirator is not required.

3.1.4 Regulated Areas

All Class I, II, and III asbestos work must be conducted within regulated areas. The regulated area must be demarcated to minimize the number of persons within the area and to protect persons outside the area from exposure to airborne asbestos. Control access to regulated areas, ensure that only authorized personnel enter, and verify that Contractor required medical surveillance, training and respiratory protection program requirements are met prior to allowing entrance.

3.1.5 Load-out Unit

Provide a temporary load-out unit that is adjacent and connected to the regulated area[and][access tunnel]. Attach the load-out unit in a leak-tight manner to each regulated area.

3.1.6 Warning Signs and Labels

Provide[bilingual] warning signs[printed in English and [_____]] at all approaches to asbestos control areas. Locate signs at such a distance that personnel may read the sign and take the necessary protective steps required before entering the area. Provide labels and affix to all asbestos materials, scrap, waste, debris, and other products contaminated with asbestos. Containers with preprinted warning labels conforming to the requirements are acceptable

3.1.6.1 Warning Sign

Provide vertical format conforming to applicable state and local regulations or 29 CFR 1926.200, and 29 CFR 1926.1101 minimum 20 by 14 inches displaying the following legend in the lower panel:

Legend	Notation
DANGER	one inch Sans Serif Gothic or Block
ASBESTOS	one inch Sans Serif Gothic or Block
MAY CAUSE CANCER	one inch Sans Serif Gothic or Block
CAUSES DAMAGE TO LUNGS	1/4 inch Sans Serif Gothic or Block
AUTHORIZED PERSONNEL ONLY	1/4 inch Sans Serif Gothic or Block
[WEAR RESPIRATORY PROTECTION AND PROTECTIVE CLOTHING IN THIS AREA]	1/4 inch Sans Serif Gothic or Block

Spacing between lines must be at least equal to the height of the upper of any two lines.

3.1.6.2 Warning Labels

Provide labels conforming to local and state regulations and 29 CFR 1926.1101 of sufficient size to be clearly legible, displaying the following legend:

DANGER

CONTAINS ASBESTOS FIBERS
MAY CAUSE CANCER
CAUSES DAMAGE TO LUNGS
DO NOT BREATHE DUST AVOID CREATING DUST

3.1.7 Local Exhaust System

Provide a local exhaust system in the asbestos control area in accordance with ASSP Z9.2 and 29 CFR 1926.1101 that provides at least four air changes per hour inside of the negative pressure enclosure. Local exhaust equipment must be operated 24-hours per day, until the asbestos control area is removed and must be leak proof to the filter and equipped with HEPA filters. Maintain a minimum pressure differential in the control area of minus 0.02 inch of water column relative to adjacent, unsealed areas. Provide continuous 24-hour per day monitoring of the pressure differential with a pressure differential automatic recording instrument. The building ventilation system must not be used as the local exhaust system for the asbestos control area. Filters on exhaust equipment must conform to ASSP Z9.2 and UL 586. Terminate the local exhaust system out of doors and remote from any public access or ventilation system intakes.

3.1.8 Tools

Vacuums must be leak proof to the filter and equipped with HEPA filters. Filters on vacuums must conform to ASSP Z9.2 and UL 586. Do not use power tools to remove asbestos containing materials unless the tool is equipped with effective, integral HEPA filtered exhaust ventilation systems. Remove all residual asbestos from reusable tools prior to storage or reuse. Reusable tools must be thoroughly decontaminated prior to being removed from the regulated areas.

3.1.9 Rental Equipment

If rental equipment is to be used, furnish written notification to the rental agency concerning the intended use of the equipment and the possibility of asbestos contamination of the equipment.

[3.1.10 Glovebags

Submit written manufacturers proof that glovebags do not break down under expected temperatures and conditions.

]3.1.11 Single Stage Decontamination Area

A decontamination area (equipment room/area) must be provided for Class I work involving less than 25 feet or 10 square feet of TSI or surfacing ACM, and for Class II and Class III asbestos work operations where exposures exceed the PELs or where there is no negative exposure assessment. The equipment room or area must be adjacent to the regulated area for the decontamination of employees, material, and their equipment which could be contaminated with asbestos. The area must be covered by an impermeable drop cloth on the floor or horizontal working surface. The area must be of sufficient size to accommodate cleaning of equipment and removing personal protective equipment without spreading contamination beyond the area.

3.1.12 Decontamination Area Exit Procedures

Ensure that the following procedures are followed:

a. Before leaving the regulated area, remove all gross contamination and debris from work clothing using a HEPA vacuum.

b. Employees must remove their protective clothing in the equipment room and deposit the clothing in labeled impermeable bags or containers for disposal.

c. Employees must not remove their respirators until showering.

d. Employees must shower prior to entering the clean room. If a shower has not been located between the equipment room and the clean room or the work is performed outdoors, ensure that employees engaged in Class I asbestos jobs: a) Remove asbestos contamination from their work suits in the equipment room or decontamination area using a HEPA vacuum before proceeding to a shower that is not adjacent to the work area; or b) Remove their contaminated work suits in the equipment room, without cleaning worksuits, and proceed to a shower that is not adjacent to the work area.

3.2 WORK PROCEDURE

Perform asbestos related work in accordance with 29 CFR 1926.1101, 40 CFR 61-SUBPART M,[NAVFAC P-502,] and as specified herein. Use[[wet][or][if given prior EPA approval, dry] removal procedures][appropriate encapsulation procedures as listed in the asbestos hazard abatement plan] and [negative pressure enclosure] [_____] techniques. Wear and utilize protective clothing and equipment as specified herein. No eating, smoking, drinking, chewing gum, tobacco, or applying cosmetics is permitted in the asbestos work or control areas. Personnel of other trades not engaged in the[encapsulation][removal and demolition] of asbestos containing material must not be exposed at any time to airborne concentrations of asbestos unless all the personnel protection and training provisions of this specification are complied with by the trade personnel.[Seal all roof top penetrations, except plumbing vents, prior to asbestos roofing work.] Shut down the building heating, ventilating, and air conditioning system, cap the openings to the system,[and provide temporary[heating,][and][ventilation,][and][air conditioning]] prior to the commencement of asbestos work. Power to the regulated area must be locked-out and tagged in accordance with 29 CFR 1910.147.[Disconnect electrical service when[encapsulation][wet removal] is performed and provide temporary electrical service with verifiable ground fault circuit interrupter (GFCI) protection prior to the use of any[water][encapsulant].] All electrical work must be performed by a licensed electrician. Stop abatement work in the regulated area immediately when the airborne total fiber concentration: (1) equals or exceeds 0.01 f/cc, or the pre-abatement concentration, whichever is greater, outside the regulated area; or (2) equals or exceeds 1.0 f/cc inside the regulated area. Correct the condition to the satisfaction of the Contracting Officer, including visual inspection and air sampling. Work must resume only upon notification by the Contracting Officer. Corrective actions must be documented. If an asbestos fiber release or spill occurs[outside of the asbestos control area], stop work immediately, correct the condition to the satisfaction of the Contracting Officer including clearance sampling, prior to resumption of work.

3.2.1 Building Ventilation System and Critical Barriers

Building ventilation system supply and return air ducts in a regulated area must be[shut down and isolated by lockable switch or other positive means in accordance with 29 CFR 1910.147.][isolated by airtight seals to prevent the spread of contamination throughout the system.] The airtight seals must consist of[air-tight rigid covers for building ventilation supply and exhaust grills where the ventilation system is required to remain in service during abatement][two layers of polyethylene]. Edges to wall, ceiling and floor surfaces must be sealed with industrial grade duct tape.

a. A Competent Person must supervise the work.

b. For indoor work, critical barriers must be placed over all openings to the regulated area.

c. Impermeable dropcloths must be placed on surfaces beneath all removal activity.

3.2.2 Protection of Existing Work to Remain

Perform work without damage or contamination of adjacent work. Where such work is damaged or contaminated as verified by the Contracting Officer using visual inspection or sample analysis, it must be restored to its original condition or decontaminated by the Contractor as deemed appropriate by the Contracting Officer. This includes inadvertent spill of dirt, dust, or debris in which it is reasonable to conclude that asbestos may exist. When these spills occur, stop work immediately. Then clean up the spill. When satisfactory visual inspection and air sampling results are obtained from the PQP work may proceed at the discretion of the Contracting Officer.

3.2.3 Furnishings

[Furniture[, (_____)] and equipment will be removed from the area of work by the Government before asbestos work begins.

][Furniture[, (_____)] and equipment will remain in the building. Cover and seal furnishings with 6-mil plastic sheet or remove from the work area and store in a location on site approved by the Contracting Officer.

][Furnishings listed below and located in the work area are considered to be contaminated with asbestos fibers. Transfer these items to an area on site approved by the Contracting Officer, decontaminate (wet methods where possible), and then store until the room from which they came is declared clean and safe for entry.[Carpets, draperies, and other items with porous, non-solid surfaces can not be suitably cleaned and must be properly disposed of as contaminated waste.] At the conclusion of the asbestos removal work and cleanup operations, transfer all objects so removed and cleaned back to the area from which they came and re-install them. Base bids on decontaminating:

a. [_____] Desks

b. [_____] Filing cabinets

c. [_____] Linear feet of shelving

d. [_____] Cubic feet of books, papers, files, [_____]

e. [_____].

]3.2.4 Precleaning

Wet wipe and HEPA vacuum all surfaces potentially contaminated with asbestos prior to establishment of an enclosure.

3.2.5 Asbestos Control Area Requirements

3.2.5.1 Negative Pressure Enclosure

Removal of[asbestos contaminated acoustical ceiling tiles,][spray applied fireproofing,][thermal system insulation,][gypsum wallboard/joint compound] [_____] require the use of a negative pressure enclosure. Block and seal openings in areas where the release of airborne asbestos fibers can be expected. Establish an asbestos negative pressure enclosure with the use of curtains, portable partitions, or other enclosures in order to prevent the escape of asbestos fibers from the contaminated asbestos work area. Negative pressure enclosure development must include protective covering of uncontaminated walls, and ceilings with a continuous membrane of two layers of minimum 6-mil plastic sheet sealed with tape to prevent water or other damage. Provide two layers of 6-mil plastic sheet over floors and extend a minimum of 12 inches up walls. Seal all joints with tape. Provide local exhaust system in the asbestos control area. Openings are allowed in enclosures of asbestos control areas for personnel and equipment entry and exit, the supply and exhaust of air for the local exhaust system and the removal of properly containerized asbestos containing materials. Replace local exhaust system filters as required to maintain the efficiency of the system.

3.2.5.2 Glovebag

If the construction of a negative pressure enclosure is infeasible for the[removal][encapsulation] of [_____] located [_____]. Use alternate techniques as indicated in 29 CFR 1926.1101. Establish designated limits for the asbestos regulated area with the use of rope or other continuous barriers, and maintain all other requirements for asbestos control areas. The PQP must conduct personal samples of each worker engaged in asbestos handling (removal, disposal, transport and other associated work) throughout the duration of the project. If the quantity of airborne asbestos fibers monitored at the breathing zone of the workers at any time exceeds background or 0.01 fibers per cubic centimeter whichever is greater, stop work, evacuate personnel in adjacent areas or provide personnel with approved protective equipment at the discretion of the Contracting Officer. This sampling may be duplicated by the Government at the discretion of the Contracting Officer. If the air sampling results obtained by the Government differ from those obtained by the Contractor, the Government will determine which results predominate. If adjacent areas are contaminated as determined by the Contracting Officer, clean the contaminated areas, monitor, and visually inspect the area as specified herein.

3.2.5.3 Regulated Area for Class II Removal

Removal of asbestos containing floor tile/mastic, sealants, are Class II removal activities. Establish designated limits for the asbestos

regulated work area with the use of red barrier tape; install critical barriers, splash guards and signs, and maintain all other requirements for asbestos control area except local exhaust. Place impermeable dropcloths on surfaces beneath removal activity extending out 3 feet in all directions. A detached decontamination system may be used. Conduct area monitoring of airborne fibers during the work shift at the designated limits of the asbestos work area and conduct personal samples of each worker engaged in the work. If the airborne fiber concentration of the workers or designated limits at any time exceeds background or 0.01 fibers per cubic centimeter, whichever is greater, stop work immediately and correct the situation.

3.2.6 Removal Procedures

Wet asbestos material with a fine spray of[amended water][a specific wetting agent such as light oil] during removal, cutting, or other handling so as to reduce the emission of airborne fibers. Remove material and immediately place in 6 mil plastic disposal bags. Remove asbestos containing material in a gradual manner, with continuous application of the amended water or wetting agent in such a manner that no asbestos material is disturbed prior to being adequately wetted. Where unusual circumstances prohibit the use of 6 mil plastic bags, submit an alternate proposal for containment of asbestos fibers to the Contracting Officer for approval. For example, in the case where both piping and insulation are to be removed, the Contractor may elect to wet the insulation, wrap the pipes and insulation in plastic and remove the pipe by sections. Containerize asbestos containing material while wet. Do not allow asbestos material to accumulate or become dry. Lower and otherwise handle asbestos containing material as indicated in 40 CFR 61-SUBPART M.

3.2.6.1 Sealing Contaminated Items Designated for Disposal

Remove contaminated architectural, mechanical, and electrical appurtenances such as venetian blinds, full-height partitions, carpeting, duct work, pipes and fittings, radiators, light fixtures, conduit, panels, and other contaminated items designated for removal by completely coating the items with an asbestos lock-down encapsulant at the demolition site before removing the items from the asbestos control area. These items need not be vacuumed. The asbestos lock-down encapsulant must be tinted a contrasting color and spray-applied by airless method. Thoroughness of sealing operation must be visually gauged by the extent of colored coating on exposed surfaces. Lock-down encapsulants must comply with the performance requirements specified herein.

3.2.7 Methods of Compliance

3.2.7.1 Mandated Practices

The specific abatement techniques and items identified must be detailed in the Contractor's Asbestos Hazard Abatement Plan (AHAP). Use the following engineering controls and work practices in all operations, regardless of the levels of exposure:

a. Vacuum cleaners equipped with HEPA filters.

b. Wet methods or wetting agents except where it can be demonstrated that the use of wet methods is unfeasible due to the creation of electrical hazards, equipment malfunction, and in roofing.

c. Prompt clean-up and disposal.

d. Inspection and repair of polyethylene.

e. Cleaning of equipment and surfaces of containers prior to removing them from the equipment room or area.

3.2.7.2 Control Methods

Use the following control methods:

a. Local exhaust ventilation equipped with HEPA filter;

b. Enclosure or isolation of processes producing asbestos dust;

c. Where the feasible engineering and work practice controls are not sufficient to reduce employee exposure to or below the PELs, use them to reduce employee exposure to the lowest levels attainable and must supplement them by the use of respiratory protection.

3.2.7.3 Unacceptable Practices

The following work practices must not be used:

a. High-speed abrasive disc saws that are not equipped with point of cut ventilator or enclosures with HEPA filtered exhaust air.

b. Compressed air used to remove asbestos containing materials, unless the compressed air is used in conjunction with an enclosed ventilation system designed to capture the dust cloud created by the compressed air.

c. Dry sweeping, shoveling, or other dry clean up.

d. Employee rotation as a means of reducing employee exposure to asbestos.

3.2.8 Class I Work Procedures

In addition to requirements of paragraphs MANDATED PRACTICES and CONTROL METHODS, the following engineering controls and work practices must be used:

a. A Competent Person must supervise the installation and operation of the control methods.

b. For jobs involving the removal of more than 25 feet or 10 square feet of TSI or surfacing material, place critical barriers over all openings to the regulated area.

c. HVAC systems must be isolated in the regulated area by sealing with a double layer of plastic or air-tight rigid covers.

d. Impermeable dropcloths (6 mil or greater thickness) must be placed on surfaces beneath all removal activity.

e. Where a negative exposure assessment has not been provided or where exposure monitoring shows the PEL was exceeded, the regulated area must be ventilated with a HEPA unit and employees must use PPE.

3.2.9 Specific Control Methods for Class I Work

Use Class I work procedures, control methods and removal methods for the following ACM:

a. Spray Applied Fireproofing

b. Gypsum Wallboard and Joint Compound

c. Thermal System Insulation and Mudded Pipe Fittings

d. Plaster and Textured Ceilings and Walls

e. Vermiculite insulation

3.2.9.1 Negative Pressure Enclosure (NPE) System

The system must provide at least four air changes per hour inside the containment. The local exhaust unit equipment must be operated 24-hours per day until the containment is removed. The NPE must be smoke tested for leaks at the beginning of each shift and be sufficient to maintain a minimum pressure differential of minus 0.02 inch of water column relative to adjacent, unsealed areas. Pressure differential must be monitored continuously, 24-hours per day, with an automatic manometric recording instrument and records must be provided daily on the same day collected to the Contracting Officer. The Contracting Officer must be notified immediately if the pressure differential falls below the prescribed minimum. The building ventilation system must not be used as the local exhaust system for the regulated area. The NPE must terminate outdoors unless an alternate arrangement is allowed by the Contracting Officer. All filters used must be new at the beginning of the project and must be periodically changed as necessary and disposed of as ACM waste.

3.2.9.2 Glovebag Systems

Glovebags must be used without modification, smoke-tested for leaks, and completely cover the circumference of pipe or other structures where the work is to be done. Glovebags must be used only once and must not be moved. Glovebags must not be used on surfaces that have temperatures exceeding 150 degrees F. Prior to disposal, glovebags must be collapsed using a HEPA vacuum. Before beginning the operation, loose and friable material adjacent to the glovebag operation must be wrapped and sealed in two layers of plastic or otherwise rendered intact. At least two persons must perform glovebag removal. Asbestos regulated work areas must be established for glovebag abatement. Designated boundary limits for the asbestos work must be established with rope or other continuous barriers and all other requirements for asbestos control areas must be maintained, including area signage and boundary warning tape.

a. Attach HEPA vacuum systems to the bag to prevent collapse during removal of ACM.

b. The negative pressure glove boxes must be fitted with gloved apertures and a bagging outlet and constructed with rigid sides from metal or other material which can withstand the weight of the ACM and water used during removal. A negative pressure must be created in the system using a HEPA filtration system. The box must be smoke tested for leaks prior to each use.

3.2.9.3 Mini-Enclosure

[Single bulkhead containment][Double bulkhead containment][or][Mini-containment (small walk-in enclosure)]to accommodate no more than two persons, may be used if the disturbance or removal can be completely contained by the enclosure. The mini-enclosure must be inspected for leaks and smoke tested before each use. Air movement must be directed away from the employee's breathing zone within the mini-enclosure.

3.2.9.4 Wrap and Cut Operation

Prior to cutting pipe, the asbestos-containing insulation must be wrapped with polyethylene and securely sealed with duct tape to prevent asbestos becoming airborne as a result of the cutting process. The following steps must be taken: install glovebag, strip back sections to be cut 6 inches from point of cut, and cut pipe into manageable sections.

3.2.9.5 Class I Removal Method

Class I ACM must be removed using a control method described above. Prepare work area as previously specified. Establish designated limits for the asbestos regulated work area with the use of red barrier tape, critical barriers, signs, and maintain all other requirements for asbestos control area. Spread one layer of 6-mil seamless plastic sheeting on the floor below the work area.[Remove asbestos containing spray applied fireproofing using a scraper and wet methods and immediately place into 6-mil thickness disposal bag. After removal of the material use a wire brush to clean the exposed substrate to remove residual material. Continue wet cleaning until surfaces are free of visible debris.][Cut manageable sections of gypsum wallboard and joint compound and immediately place into a 6-mil minimum thickness disposal bag or other approved container. Make every effort to keep the material from falling to the floor of the work area. Use a wire brush and wet clean to remove residual material from studs. Continue wet cleaning until the surface is clean of visible material and encapsulate stud walls.][Remove ACM thermal system insulation and mudded pipe fittings using mechanical means and wet methods and immediately place into 6-mil thickness disposal bag. Continue wet cleaning until surfaces are free of visible debris.][Remove ACM plaster ceilings or walls using mechanical means and adequately wet methods and immediately place into 6-mil thickness disposal bag. Make every effort to keep the material from falling to the floor of the work area. Continue wet cleaning until surfaces are free of visible debris.][Remove ACM textured ceiling finish using a scraper and wet methods and immediately place into 6-mil thickness disposal bag. Floors are considered contaminated from fallen textured ceiling finish. Clean up debris on floor and dispose of[carpet] as asbestos contaminated material. After removal of the material use a wire brush to clean the exposed[concrete] ceiling to remove residual material. Continue wet cleaning until surfaces are free of visible debris.][Remove ACM vermiculite using mechanical means and adequately wet methods and immediately place into 6-mil thickness disposal bag. Make every effort to keep the material from falling to the floor of the work area. Continue wet cleaning until surfaces are free of visible debris.] Bag all asbestos debris which has fallen to the floor as asbestos-containing debris. Place all debris in plastic disposal bags of 6-mil minimum thickness. Once the material is in the disposal bag, apply additional water as needed to achieve "adequately wet" conditions for NESHAP compliance. Place bagged asbestos waste under negative pressure with the use of a HEPA vacuum, goose neck and duct tape to seal the bag, wash to remove any visible contamination and place into a

second 6-mil minimum thickness disposal bag. Containerize asbestos containing waste while wet. Lower and otherwise handle asbestos containing materials as indicated in 40 CFR 61-SUBPART M. Conduct area monitoring of airborne fibers during the work shift at the designated limits of the asbestos work area and conduct personal samples of each worker engaged in the work. If the quantity of airborne asbestos fibers monitored at the breathing zone of the workers or the designated limits at any time exceeds background or 0.01 fibers per cubic centimeter, whichever is greater, stop work, and immediately correct the situation.

3.2.10 Class II Work Procedures

In addition to the requirements of paragraphs MANDATED PRACTICES and CONTROL METHODS, the following engineering controls and work practices must be used:

a. A Competent Person must supervise the work.

b. For indoor work, critical barriers must be placed over all openings to the regulated area.

c. Impermeable dropcloths must be placed on surfaces beneath all removal activity.

3.2.11 Specific Control Methods for Class II Work

3.2.11.1 Vinyl and Asphaltic Flooring Materials Mastic

Establish designated limits for the asbestos regulated work area with the use of red barrier tape, critical barriers, signs, and maintain all other requirements for asbestos control area except local exhaust. A detached decontamination system may be used. When removing vinyl floor tile and mastic which contains ACM, use the following practices. Remove floor tile and mastic using adequately wet methods. Remove floor tiles intact (if possible). Wetting is not required when floor tiles are heated and removed intact. Do not sand flooring or its backing. Scrape residual adhesive and backing using wet methods. Mechanical chipping is prohibited unless performed in a negative pressure enclosure. Dry sweeping is prohibited. Use vacuums equipped with HEPA filter, disposable dust bag, and metal floor tool (no brush) to clean floors. Place debris into a 6-mil minimum thickness disposal bag or other approved container. Once the material is in the disposal bag, apply additional water as needed to achieve "adequately wet" conditions for NESHAP compliance. Place bagged asbestos waste under negative pressure with the use of a HEPA vacuum, goose neck and duct tape to seal the bag, wash to remove any visible contamination and place into a second 6-mil minimum thickness disposal bag. Containerize asbestos containing waste while wet. Lower and otherwise handle asbestos containing materials as indicated in 40 CFR 61-SUBPART M. Conduct area monitoring of airborne fibers during the work shift at the designated limits of the asbestos work area and conduct personal samples of each worker engaged in the work. If the airborne fiber concentration of the workers or designated limits at any time exceeds background or 0.01 fibers per cubic centimeter, whichever is greater, stop work immediately and correct the situation.

3.2.11.2 Sealants and Mastic

Establish designated limits for the asbestos regulated work area with the use of red barrier tape, critical barriers and signs, and maintain all

other requirements for asbestos control area except local exhaust. Spread 6-mil plastic sheeting on the ground around the perimeter of the work area extending out in all directions. Using adequately wet methods, carefully remove the ACM sealants and mastics using a scraper of knife blade. As it is removed place the material into a disposal bag. Make every effort to keep the asbestos material from falling to the ground or work area floor below. Dry sweeping is prohibited. Use vacuums equipped with HEPA filter and disposable dust bag. Place debris into a 6-mil minimum thickness disposal bag or other approved container. Once the material is in the disposal bag, apply additional water as needed to achieve "adequately wet" conditions for NESHAP compliance. Place bagged asbestos waste under negative pressure with the use of a HEPA vacuum, goose neck and duct tape to seal the bag, wash to remove any visible contamination and place into a second 6-mil minimum thickness disposal bag. Containerize asbestos containing waste while wet. Lower and otherwise handle asbestos containing materials as indicated in 40 CFR 61-SUBPART M. Conduct area monitoring of airborne fibers during the work shift at the designated limits of the asbestos work area and conduct personal samples of each worker engaged in the work. If the airborne fiber concentration of the workers or at designated limits at any time exceeds background or 0.01 fibers per cubic centimeter, whichever is greater, stop work immediately and correct the situation.

3.2.12 Air Sampling

Perform sampling of airborne concentrations of asbestos fibers in accordance with 29 CFR 1926.1101, the Contractor's air monitoring plan, applicable local, state and federal regulations, and as specified herein. Sampling performed in accordance with 29 CFR 1926.1101 must be performed by the PQP. Sampling performed for environmental and quality control reasons must be performed by the PQP. Unless otherwise specified, use NIOSH Method 7400 for sampling and analysis. Monitoring may be duplicated by the Government at the discretion of the Contracting Officer. If the air sampling results obtained by the Government differ from those results obtained by the Contractor, the Government will determine which results predominate. Results of breathing zone samples must be made available to the tested employees and Contracting Officer.. Submit all documentation regarding initial exposure assessments, negative exposure assessments, and air-monitoring results.

3.2.12.1 Sampling Prior to Asbestos Work

Provide area air sampling and establish the baseline one day prior to the masking and sealing operations for each removal site. Establish the background by performing area sampling in similar but uncontaminated sites in the building.

3.2.12.2 Sampling During Asbestos Work

[The PQP must provide personal and area sampling as indicated in 29 CFR 1926.1101 and governing environmental regulations. Breathing zone samples must be taken for at least 25 percent of the workers in each shift, or a minimum of two, whichever is greater. Air sample fiber counting must be completed and results provided within 24-hours (breathing zone samples), and [_____] hours (environmental/clearance monitoring) after completion of a sampling period. In addition, provided the same type of work is being performed, provide area sampling at least once every work shift close to the work inside the enclosure, outside the clean room entrance to the enclosure, and at the exhaust opening of the local exhaust

system. If sampling outside the enclosure shows airborne levels have exceeded background or 0.01 fibers per cubic centimeter, whichever is greater, stop all work, correct the condition(s) causing the increase, and notify the Contracting Officer immediately.[Where alternate methods are used, perform personal and area air sampling at locations and frequencies that accurately characterize the evolving airborne asbestos levels.] The written results must be signed by testing laboratory analyst, testing laboratory principal and the Contractor's PQP. The air sampling results must be documented on a Contractor's daily air monitoring log.

][The PQP must provide personal sampling as indicated in 29 CFR 1926.1101. Breathing zone samples must be taken for at least 25 percent of the workers in each shift, or a minimum of two, whichever is greater. Breathing zone samples must be taken for at least 25 percent of the workers in each shift, or a minimum of two, whichever is greater. Air sample fiber counting must be completed and results provided within 24-hours (breathing zone samples), and [_____] hours (environmental/clearance monitoring) after completion of a sampling period. At the same time the PQP must provide area sampling close to the work inside the enclosure, outside the clean room entrance to the enclosure, and at the exhaust opening of the local exhaust system. In addition, provided the same type of work is being performed, the PQP must provide area sampling once every work shift close to the work inside the enclosure, outside the clean room entrance to the enclosure, and at the exhaust opening of the local exhaust system. If sampling outside the enclosure shows airborne levels have exceeded background or 0.01 fibers per cubic centimeter, whichever is greater, stop all work, correct the condition(s) causing the increase, and notify the Contracting Officer immediately.[Where alternate methods are used, perform personal and area air sampling at locations and frequencies that accurately characterize the evolving airborne asbestos levels.] The written results must be signed by testing laboratory analyst, testing laboratory principal and the Contractor's PQP. The air sampling results must be documented on a Contractor's daily air monitoring log.

]3.2.12.3 Final Clearance Requirements, NIOSH PCM Method

For PCM sampling and analysis using NIOSH NMAM Method 7400, the fiber concentration inside the abated regulated area, for each airborne sample, must be less than 0.01 f/cc. The abatement inside the regulated area is considered complete when every PCM final clearance sample is below the clearance limit. If any sample result is greater than 0.01 total f/cc, the asbestos fiber concentration (asbestos f/cc) must be confirmed from that same filter using NIOSH NMAM Method 7402 (TEM) at no additional cost to the Government. If any confirmation sample result is greater than 0.01 asbestos f/cc, abatement is incomplete and cleaning must be repeated at no additional cost to the Government. Upon completion of any required recleaning, resampling with results to meet the above clearance criteria must be done at no additional cost to the Government.

3.2.12.4 Final Clearance Requirements, EPA TEM Method

For EPA TEM sampling and analysis, using the EPA Method specified in 40 CFR 763, abatement inside the regulated area is considered complete when the arithmetic mean asbestos concentration of the five inside samples is less than or equal to 70 structures per square millimeter (70 S/mm). When the arithmetic mean is greater than 70 S/mm, the three blank samples must be analyzed. If the three blank samples are greater than 70 S/mm, resampling must be done. If less than 70 S/mm, the five outside samples

must be analyzed and a Z-test analysis performed. When the Z-test results are less than 1.65, the decontamination must be considered complete. If the Z-test results are more than 1.65, the abatement is incomplete and cleaning must be repeated. Upon completion of any required recleaning, resampling with results to meet the above clearance criteria must be done at no additional cost to the Government.

3.2.12.5 Sampling After Final Clean-Up (Clearance Sampling)

Provide area sampling of asbestos fibers[using aggressive air sampling techniques as defined in the EPA 560/5-85-024] and establish an airborne asbestos concentration of less than 0.01 fibers per cubic centimeter after final clean-up but before removal of the enclosure or the asbestos work control area. After final cleanup and the asbestos control area is dry but prior to clearance sampling, the PQP must perform a visual inspection in accordance with ASTM E1368 to ensure that the asbestos control and work area is free of any accumulations of dirt, dust, or debris.[Prepare a written report signed and dated by the PQP documenting that the asbestos control area is free of dust, dirt, and debris and all waste has been removed.][Perform at least [_____] samples.][Use transmission electron microscopy (TEM) to analyze clearance samples and report the results in accordance with current NIOSH criteria.] The asbestos fiber counts from these samples must be less than 0.01 fibers per cubic centimeter or be not greater than the background, whichever is greater. If any of the final samples indicate a higher value take appropriate actions to re-clean the area and repeat the sampling and[TEM] analysis at no additional cost to the Government.

3.2.12.6 Air Clearance Failure

If clearance sampling results fail to meet the final clearance requirements, pay all costs associated with the required recleaning, resampling, and analysis, until final clearance requirements are met.

3.2.13 Lock-Down

Prior to removal of plastic barriers and after pre-clearance clean up of gross contamination, the PQP must conduct a visual inspection of all areas affected by the[removal][encapsulation] in accordance with ASTM E1368. Inspect for any visible fibers[, and to ensure that encapsulants were applied evenly and appropriately].[Spray apply a post removal (lock-down) encapsulant to ceiling, walls, floors and other areas exposed in the removal area. The exposed area includes but is not limited to plastic barriers, furnishings and articles to be discarded as well as dirty change room, air locks for bag removal and decontamination chambers.]

3.2.14 Site Inspection

While performing asbestos engineering control work, the Contractor must be subject to on-site inspection by the Contracting Officer who may be assisted by or represented by safety or industrial hygiene personnel. If the work is found to be in violation of this specification, the Contracting Officer or his representative will issue a stop work order to be in effect immediately and until the violation is resolved. All related costs including standby time required to resolve the violation must be at no additional cost to the Government.

3.3 CLEAN-UP AND DISPOSAL

3.3.1 Housekeeping

Essential parts of asbestos dust control are housekeeping and clean-up procedures. Maintain surfaces of the asbestos control area free of accumulations of asbestos fibers. Give meticulous attention to restricting the spread of dust and debris; keep waste from being distributed over the general area. Use HEPA filtered vacuum cleaners. DO NOT BLOW DOWN THE SPACE WITH COMPRESSED AIR. When asbestos removal is complete, all asbestos waste is removed from the work-site, and final clean-up is completed, the Contracting Officer will attest that the area is safe before the signs can be removed. After final clean-up and acceptable airborne concentrations are attained but before the HEPA unit is turned off and the enclosure removed, remove all pre-filters on the building HVAC system and provide new pre-filters. Dispose of filters as asbestos contaminated materials. Reestablish HVAC mechanical, and electrical systems in proper working order. The Contracting Officer will visually inspect all surfaces within the enclosure for residual material or accumulated dust or debris. The Contractor must re-clean all areas showing dust or residual materials. If re-cleaning is required, air sample and establish an acceptable asbestos airborne concentration after re-cleaning. The Contracting Officer must agree that the area is safe in writing before unrestricted entry is permitted. The Government must have the option to perform monitoring to determine if the areas are safe before entry is permitted.

3.3.2 Title to Materials

All waste materials, except as specified otherwise, become the property of the Contractor and must be disposed of as specified in applicable local, State, and Federal regulations and herein.

3.3.3 Disposal of Asbestos

3.3.3.1 Procedure for Disposal

Coordinate all waste disposal manifests with the Contracting Officer and host installation environmental function. Collect asbestos waste, contaminated waste water filters, asbestos contaminated water, scrap, debris, bags, containers, equipment, and asbestos contaminated clothing which may produce airborne concentrations of asbestos fibers and place in sealed fiber-proof, waterproof, non-returnable containers (e.g. double plastic bags 6 mils thick, cartons, drums or cans). Wastes within the containers must be adequately wet in accordance with 40 CFR 61-SUBPART M. Affix a warning and Department of Transportation (DOT) label to each container including the bags or use at least 6 mils thick bags with the approved warnings and DOT labeling preprinted on the bag. Clearly indicate on the outside of each container the name of the waste generator and the location at which the waste was generated. Prevent contamination of the transport vehicle (especially if the transport vehicle is a rented truck likely to be used in the future for non-asbestos purposes). These precautions include lining the vehicle cargo area with plastic sheeting (similar to work area enclosure) and thorough cleaning of the cargo area after transport and unloading of asbestos debris is complete. Dispose of waste asbestos material at an Environmental Protection Agency (EPA) or State-approved asbestos landfill off Government property. For temporary storage, store sealed impermeable bags in asbestos waste drums or skids. An area for interim storage of asbestos waste-containing drums or skids

must be assigned by the Contracting Officer or his authorized representative. Comply with 40 CFR 61-SUBPART M, State, regional, and local standards for hauling and disposal. Sealed plastic bags may be dumped from drums into the burial site unless the bags have been broken or damaged. Damaged bags must remain in the drum and the entire contaminated drum must be buried. Uncontaminated drums may be recycled. All persons handling containers with asbestos containing wastes must comply with applicable federal, state, and local regulations.

3.3.3.2 Asbestos Disposal Quantity Report

[Direct the PQP to record and report, to the Contracting Officer, the amount of asbestos containing material removed and released for disposal. Deliver the report for the previous day at the beginning of each day shift with amounts of material removed during the previous day reported in linear feet or square feet as described initially in this specification and in cubic feet for the amount of asbestos containing material released for disposal.

][Allow the PQP to inspect, record and report the amount of asbestos containing material removed and released for disposal on a daily basis. Exclude hazardous waste from waste reduction calculations in accordance with Section 01 74 19 CONSTRUCTION WASTE MANAGEMENT AND DISPOSAL.

] -- End of Section --

SECTION TABLE OF CONTENTS

DIVISION 09 - FINISHES

SECTION 09 06 00

SCHEDULES FOR FINISHES

PART 1 GENERAL

1.1 SUMMARY

PART 2 PRODUCTS

2.1 COLOR SCHEDULE
2.2 INTERIOR FINISHES
2.2.1 Interior Floor Finishes
2.2.1.1 Carpet Tile
2.2.2 Interior Base Finishes
2.2.2.1 Resilient Base and Moldings
2.2.3 Interior Wall Finishes
2.2.3.1 Paint
2.2.4 Interior Window Treatment
2.2.4.1 Horizontal Blinds
2.2.5 Interior Miscellaneous
2.2.5.1 Wall Switch Handles and Standard Receptacle Bodies
2.2.5.2 Electrical Device Cover Plates

PART 3 EXECUTION

-- End of Section Table of Contents --

SECTION 09 06 00

SCHEDULES FOR FINISHES

PART 1 GENERAL

1.1 SUMMARY

This section covers only the color of exterior and interior materials and products that are exposed to view in the finished construction. The word "color", as used herein, includes surface color and pattern. Requirements for quality, product specifications, and method of installation are covered in other appropriate sections of the specifications. Specific locations where the various materials are required are shown on the drawings if not identified in this specification. Items not designated for color in this section may be specified in other sections. When color is not designated for items, propose a color for approval.

PART 2 PRODUCTS

2.1 COLOR SCHEDULE

The color information provided in the following paragraphs lists the colors, patterns and textures for exterior and interior finishes, including both factory applied and field applied colors. In the case of difference between the drawings and specifications, colors identified in this specification govern.

2.2 INTERIOR FINISHES

2.2.1 Interior Floor Finishes

Provide flooring materials to match the colors listed below.

2.2.1.1 Carpet Tile

Carpet shall be patterned or bold multi-colored tweed for maximum soil-hiding properties. Carpet shall contain a minimum of four distinctly different colors. Carpet shall be neutral in color and coordinate with the black resilient base.

2.2.2 Interior Base Finishes

Provide base materials to match the colors listed below.

2.2.2.1 Resilient Base and Moldings

Manufacturer Standard Black

2.2.3 Interior Wall Finishes

Apply interior wall color to the entire wall surface, including reveals, vertical furred spaces and columns, grilles, diffusers, electrical and access panels, and piping and conduit adjacent to wall surfaces unless otherwise specified. Paint items not specified in other paragraphs to match adjacent wall surface. Provide wall materials to match the colors

listed below.

2.2.3.1 Paint

Paint shall be neutral and coordinate with the carpet tile. LRV of paint shall be no lower that 60.

2.2.4 Interior Window Treatment

Provide window treatments to match the colors listed below.

2.2.4.1 Horizontal Blinds

Selected from manufacturer's standard colors.

2.2.5 Interior Miscellaneous

Provide miscellaneous items to match the colors listed below.

2.2.5.1 Wall Switch Handles and Standard Receptacle Bodies

Manufacturers Standard White

2.2.5.2 Electrical Device Cover Plates

Manufacturers Standard White

PART 3 EXECUTION

Not Used

-- End of Section --

This page was intentionally left blank for duplex printing.

SECTION TABLE OF CONTENTS

DIVISION 09 - FINISHES

SECTION 09 65 00

RESILIENT FLOORING

PART 1 GENERAL

1.1 REFERENCES
1.2 SUBMITTALS
1.3 CERTIFICATES
1.3.1 Indoor Air Quality
1.3.1.1 Floor Covering Materials
1.3.1.2 Adhesives, Caulking, and Sealants
1.4 DELIVERY, STORAGE, AND HANDLING
1.5 ENVIRONMENTAL REQUIREMENTS
1.6 SCHEDULING
1.7 WARRANTY
1.8 EXTRA MATERIALS

PART 2 PRODUCTS

2.1 WALL BASE
2.2 ADHESIVES
2.3 MANUFACTURER'S COLOR, PATTERN, AND TEXTURE

PART 3 EXECUTION

3.1 EXAMINATION
3.2 GENERAL INSTALLATION
3.3 PLACING WALL BASE
3.4 CLEANING
3.5 PROTECTION

-- End of Section Table of Contents --

SECTION 09 65 00

RESILIENT FLOORING

PART 1 GENERAL

1.1 REFERENCES

The publications listed below form a part of this specification to the extent referenced. The publications are referred to within the text by the basic designation only.

ASTM INTERNATIONAL (ASTM)

ASTM F1861	(2021) Standard Specification for Resilient Wall Base

CALIFORNIA DEPARTMENT OF PUBLIC HEALTH (CDPH)

CDPH SECTION 01350	(2017; Version 1.2) Standard Method for the Testing and Evaluation of Volatile Organic Chemical Emissions from Indoor Sources using Environmental Chambers

GREEN SEAL (GS)

GS-36	(2013) Adhesives for Commercial Use

SCIENTIFIC CERTIFICATION SYSTEMS (SCS)

SCS	SCS Global Services (SCS) Indoor Advantage

SOUTH COAST AIR QUALITY MANAGEMENT DISTRICT (SCAQMD)

SCAQMD Rule 1168	(2022) Adhesive and Sealant Applications

UL SOLUTIONS (UL)

UL 2818	(2022) GREENGUARD Certification Program For Chemical Emissions For Building Materials, Finishes And Furnishings

1.2 SUBMITTALS

Government approval is required for submittals with a "G" classification. Submittals not having a "G" classification are for information only. When used, a code following the "G" classification identifies the office that will review the submittal for the Government. Submit the following in accordance with Section 01 33 00 SUBMITTAL PROCEDURES:

SD-02 Shop Drawings

Resilient Flooring and Accessories

SD-03 Product Data

Resilient Flooring and Accessories

Adhesives

Wall Base; G, DO

SD-04 Samples

Resilient Flooring and Accessories; G, DO

SD-06 Test Reports

Moisture, Alkalinity, and Bond Tests

SD-07 Certificates

Indoor Air Quality for Wall Base

Indoor Air Quality for Adhesives

SD-08 Manufacturer's Instructions

Surface Preparation

Installation

SD-10 Operation and Maintenance Data

Resilient Flooring and Accessories

1.3 CERTIFICATES

1.3.1 Indoor Air Quality

Submit required indoor air quality certifications and validations in one submittal package.

1.3.1.1 Floor Covering Materials

Provide wall base products certified to meet indoor air quality requirements by FLOORSCORE, UL 2818 (Greenguard) Gold, SCS Global Services Indoor Advantage Gold or provide certification by other third-party programs. Provide current product certification documentation from certification body.

1.3.1.2 Adhesives, Caulking, and Sealants

Provide asbestos-free products certified to meet indoor air quality requirements by UL 2818 (Greenguard) Gold, SCS Global Services Indoor Advantage Gold or provide certification or validation by other third-party programs that products meet the requirements of this Section. Provide current product certification documentation from certification body. When product does not have certification, provide validation that product meets the indoor air quality product requirements cited herein.

1.4 DELIVERY, STORAGE, AND HANDLING

Deliver materials to the building site in original unopened containers bearing the manufacturer's name, style name, pattern color name and

number, production run, project identification, and handling instructions. Store materials in a clean, dry, secure, and well-ventilated area free from strong contaminant sources and residues with ambient air temperature maintained above 68 degrees F and below 85 degrees F, stacked according to manufacturer's recommendations. Remove resilient flooring products from packaging to allow ventilation prior to installation. Protect materials from the direct flow of heat from hot-air registers, radiators and other heating fixtures and appliances. Observe ventilation and safety procedures specified in the MSDS. Do not store rubber surface products with materials that have a high capacity to adsorb volatile organic compound (VOC) emissions. Do not store exposed rubber surface materials in occupied spaces.

1.5 ENVIRONMENTAL REQUIREMENTS

Maintain areas to receive resilient flooring at a temperature above 70 degrees F and below 85 degrees F for 3 days before application, during application and 2 days after application, unless otherwise directed by the flooring manufacturer for the flooring being installed. Maintain a minimum temperature of 55 degrees F thereafter. Provide adequate ventilation to remove moisture from area and to comply with regulations limiting concentrations of hazardous vapors.

1.6 SCHEDULING

Schedule resilient flooring application after the completion of other work which would damage the finished surface of the flooring.

1.7 WARRANTY

Provide manufacturer's standard performance guarantees or warranties that extend beyond a one year period.

1.8 EXTRA MATERIALS

Provide extra wall base material composed of 20 linear feet of each type, color and pattern. Package all extra materials in original properly marked containers bearing the manufacturer's name, brand name, pattern color name and number, production run, and handling instructions. Provide extra materials from the same lot as those installed. Leave extra stock at the site in location assigned by Contracting Officer.

PART 2 PRODUCTS

2.1 WALL BASE

Conform to ASTM F1861, Type TS (vulcanized thermoset rubber) Style A (straight - installed with carpet). Provide 4 inch high and a minimum 1/8 inch thick wall base. Provide job formed corners in matching height, shape, and color.

Provide certification of indoor air quality for Wall Base.

2.2 ADHESIVES

Provide asbestos-free adhesives for base and accessories as recommended by the manufacturer and comply with local indoor air quality standards. Submit manufacturer's descriptive data, documentation stating physical characteristics, and mildew and germicidal characteristics.

Provide non-aerosol adhesive products used on the interior of the building (defined as inside of the weatherproofing system) that meet either emissions requirements of CDPH SECTION 01350 (limit requirements for either office or classroom spaces regardless of space type) or VOC content requirements of SCAQMD Rule 1168. Provide aerosol adhesives used on the interior of the building that meet either emissions requirements of CDPH SECTION 01350 (use the office or classroom requirements, regardless of space type) or VOC content requirements of GS-36. Provide certification or validation of indoor air quality for adhesives.

2.3 MANUFACTURER'S COLOR, PATTERN, AND TEXTURE

Provide color, pattern and texture for resilient flooring and accessories in accordance with Section 09 06 00 SCHEDULES FOR FINISHES. Color listed is not intended to limit the selection of equal colors from other manufacturers. Submit manufacturer's descriptive data and three samples of each indicated color and type of base sized a minimum 4 by 9 inch.

PART 3 EXECUTION

3.1 EXAMINATION

Examine and verify that site conditions are in agreement with the design package. Report all conditions that will prevent a proper installation. Do not take any corrective action without written permission from the Government. Work will proceed only when conditions have been corrected and accepted by the installer. Submit manufacturer's printed installation instructions for all flooring materials and accessories, including preparation of substrate, seaming techniques, and recommended adhesives.

3.2 GENERAL INSTALLATION

Do not install building construction materials that show visual evidence of biological growth.

Comply with manufacturer's written instructions for installing resilient sheet flooring and for unrolling and stabilizing flooring materials prior to installation. Minimize the number of seams in sheet flooring, especially in high traffic or conspicuous locations.

3.3 PLACING WALL BASE

Install wall base in accordance with manufacturer's printed installation instructions. Prepare and apply adhesives in accordance with manufacturer's printed installation instructions. Tighten base joints and make even with adjacent resilient flooring. Fill voids along the top edge of base at masonry walls with caulk. Roll entire vertical surface of base with hand roller, and press toe of base with a straight piece of wood to ensure proper alignment. Avoid excess adhesive in corners.

3.4 CLEANING

Immediately upon completion of installation of flooring in a room or an area, dry and clean the flooring and adjacent surfaces to remove all surplus adhesive. Clean flooring as recommended in accordance with manufacturer's printed maintenance instructions and within the recommended time frame. As required by the manufacturer, apply the recommended number of coats and type of polish and finish in accordance with manufacturer's

printed instructions.

3.5 PROTECTION

From the time of installation until acceptance, protect flooring from damage as recommended by the flooring manufacturer. Remove and replace flooring which becomes damaged, loose, broken, or curled and wall base which is not tight to wall or securely adhered.

-- End of Section --

SECTION TABLE OF CONTENTS

DIVISION 09 - FINISHES

SECTION 09 68 00

CARPETING

PART 1 GENERAL

1.1 REFERENCES
1.2 SUBMITTALS
1.3 CERTIFICATIONS
1.3.1 Indoor Air Quality Certifications
1.3.1.1 Floor Covering Materials
1.4 DELIVERY, STORAGE, AND HANDLING
1.5 AMBIENT CONDITIONS
1.6 WARRANTY

PART 2 PRODUCTS

2.1 CARPET
2.1.1 Recycled Content
2.1.2 PFOS/PFOA Requirements
2.1.3 Indoor Air Quality Requirements
2.1.4 Physical Characteristics for Modular Tile Carpet
2.1.4.1 Carpet Construction
2.1.4.2 Type
2.1.4.3 Pile Type
2.1.4.4 Pile Fiber
2.1.4.5 Gauge or Pitch
2.1.4.6 Stitches or Rows/Wires
2.1.4.7 Surface Pile Weight
2.1.4.8 Pile Thickness
2.1.4.9 Dye Method
2.1.4.10 Backing Materials
2.2 PERFORMANCE REQUIREMENTS
2.2.1 Texture Appearance Retention Rating (TARR)
2.2.2 Static Control
2.2.3 Flammability and Critical Radiant Flux Requirements
2.2.4 Tuft Bind
2.2.5 Colorfastness to Crocking
2.2.6 Colorfastness to Light
2.2.7 Colorfastness to Water
2.2.8 Breaking Strength
2.2.9 Delamination Strength
2.3 ADHESIVES AND CONCRETE PRIMER
2.4 COLOR, TEXTURE, AND PATTERN

PART 3 EXECUTION

3.1 SURFACE PREPARATION
3.2 MOISTURE AND ALKALINITY TESTS
3.3 PREPARATION OF CONCRETE SUBFLOOR

3.4 INSTALLATION
3.4.1 Modular Tile Installation
3.5 CLEANING AND PROTECTION
3.5.1 Cleaning
3.5.2 Protection
3.6 REMNANTS
3.7 MAINTENANCE
3.7.1 Extra Materials

-- End of Section Table of Contents --

SECTION 09 68 00

CARPETING

PART 1 GENERAL

Contractor responsible for removing and disposing of existing carpet in the office area and asbestos tile underneath. Contractor to supply and install a new carpet system after asbestos tile removal according to these specs.

1.1 REFERENCES

The publications listed below form a part of this specification to the extent referenced. The publications are referred to within the text by the basic designation only.

AMERICAN ASSOCIATION OF TEXTILE CHEMISTS AND COLORISTS (AATCC)

AATCC 16.1	(2023) Test Method for Colorfastness to Light: Outdoor
AATCC 107	(2013) Colorfastness to Water
AATCC 134	(2016) Electrostatic Propensity of Carpets
AATCC 165	(2013) Colorfastness to Crocking: Textile Floor Coverings - Crockmeter Method

ASTM INTERNATIONAL (ASTM)

ASTM D1335	(2017; E 2018) Standard Test Method for Tuft Bind of Pile Yarn Floor Coverings
ASTM D2646	(2024) Standard Guide for Backing Fabric Characteristics of Pile Yarn Floor Coverings
ASTM D2859	(2016) Standard Test Method for Ignition Characteristics of Finished Textile Floor Covering Materials
ASTM D3278	(2021) Standard Test Methods for Flash Point of Liquids by Small Scale Closed-Cup Apparatus
ASTM D3936	(2021) Standard Test Method for Resistance to Delamination of the Secondary Backing of Pile Yarn Floor Covering
ASTM D5793	(2018) Standard Test Method for Binding Sites Per Unit Length or Width of Pile Yarn Floor Coverings
ASTM D5848	(2020) Standard Test Method for Mass Per Unit Area of Pile Yarn Floor Coverings

ASTM D6859	(2011) Standard Test Method for Pile Thickness of Finished Level Pile Yarn Floor Coverings
ASTM D7330	(2015) Standard Test Method for Assessment of Surface Appearance Change in Pile Floor Coverings Using Standard Reference Scales
ASTM E648	(2023) Standard Test Method for Critical Radiant Flux of Floor-Covering Systems Using a Radiant Heat Energy Source
ASTM F1869	(2023) Standard Test Method for Measuring Moisture Vapor Emission Rate of Concrete Subfloor Using Anhydrous Calcium Chloride
ASTM F2170	(2019a) Standard Test Method for Determining Relative Humidity in Concrete Floor Slabs Using in situ Probes

CALIFORNIA DEPARTMENT OF PUBLIC HEALTH (CDPH)

CDPH SECTION 01350	(2017; Version 1.2) Standard Method for the Testing and Evaluation of Volatile Organic Chemical Emissions from Indoor Sources using Environmental Chambers

CARPET AND RUG INSTITUTE (CRI)

CRI 104	(2015) Carpet Installation Standard for Commercial Carpet
CRI 105	(2015) Carpet Installation Standard for Residential Carpet
CRI GLP QM	(2017) Green Label Plus Quality Manual
CRI Test Method 103	(2015) Standard Test Method for the Evaluation of Texture Appearance Retention of Carpet Standards Program

GREEN SEAL (GS)

GS-36	(2013) Adhesives for Commercial Use

INTERNATIONAL ORGANIZATION FOR STANDARDIZATION (ISO)

ISO 2551	(2020) Textile Floor Coverings and Textile Floor Coverings in Tile Form-Determination of Dimensional Changes Due to the Effects of Varied Water and Heat Conditions and Distortion Out of Plane

NATIONAL FIRE PROTECTION ASSOCIATION (NFPA)

NFPA 253	(2011) Standard Method of Test for Critical Radiant Flux of Floor Covering Systems Using a Radiant Heat Energy Source

SCIENTIFIC CERTIFICATION SYSTEMS (SCS)

SCS	SCS Global Services (SCS) Indoor Advantage

SOUTH COAST AIR QUALITY MANAGEMENT DISTRICT (SCAQMD)

SCAQMD Rule 1113	(2016) Architectural Coatings
SCAQMD Rule 1168	(2022) Adhesive and Sealant Applications

U.S. NATIONAL ARCHIVES AND RECORDS ADMINISTRATION (NARA)

16 CFR 1630	Standard for the Surface Flammability of Carpets and Rugs (FF 1-70)

UL SOLUTIONS (UL)

UL 2818	(2022) GREENGUARD Certification Program For Chemical Emissions For Building Materials, Finishes And Furnishings

1.2 SUBMITTALS

Government approval is required for submittals with a "G" classification. Submittals not having a "G" classification are for information only. When used, a code following the "G" classification identifies the office that will review the submittal for the Government. Submit the following in accordance with Section 01 33 00 SUBMITTAL PROCEDURES:

SD-02 Shop Drawings

Installation Drawings

SD-03 Product Data

Carpet; G, DO

Recycled Content for Carpeting

Indoor Air Quality for Aerosol Adhesives

Indoor Air Quality for Non-Aerosol Adhesives

Indoor Air Quality for Concrete Primer

SD-04 Samples

Carpet; G, DO

Sustainable Product Certifications

SD-06 Test Reports

Moisture and Alkalinity Tests

SD-07 Certificates

Indoor Air Quality for Carpet

SD-08 Manufacturer's Instructions

Surface Preparation

SD-10 Operation and Maintenance Data

Cleaning and Protection

Maintenance Service

SD-11 Closeout Submittals

Warranty

1.3 CERTIFICATIONS

1.3.1 Indoor Air Quality Certifications

1.3.1.1 Floor Covering Materials

Provide carpet and cushion products certified to meet indoor air quality requirements by UL 2818 (GreenGuard) Gold, SCS Global Services Indoor Advantage Gold, CRI GLP QM or provide certification or validation by other third-party program that products meet the requirements of this Section. Provide current product certification documentation from certification body. When product does not have certification, provide validation that product meets the indoor air quality product requirements cited herein.

1.4 DELIVERY, STORAGE, AND HANDLING

Deliver materials to the site in the manufacturer's original wrappings and packages clearly labeled with the manufacturer's name, brand name, size, dye lot number, and related information. Remove materials from packaging and store them in a clean, dry, well ventilated area (100 percent outside air supply, minimum of 1.5 air changes per hour, and no recirculation), protected from damage, soiling, and moisture, and strong contaminant sources and residues, and maintain at a temperature above 60 degrees F for 2 days prior to installation. Do not store carpet or modular carpet tiles with materials which have high emissions of volatile organic compounds (VOCs) or other contaminants, including paints and adhesives. Do not store carpet near materials that may off gas or emit harmful fumes, such as kerosene heaters, fresh paint, or adhesives.

1.5 AMBIENT CONDITIONS

Maintain areas in which carpeting is to be installed at a temperature above 60 degrees F and below 90 degrees F for 2 days before installation, during installation, and for 2 days after installation. Provide temporary ventilation during work of this section. Maintain a minimum temperature of 55 degrees F thereafter for the duration of the contract.

1.6 WARRANTY

Provide manufacturer's standard performance guarantees or warranties including minimum ten year wear warranty, two year material and workmanship and ten year tuft bind and delamination.

PART 2 PRODUCTS

2.1 CARPET

Furnish first quality carpet that is free of visual blemishes, streaks, poorly dyed areas, fuzzing of pile yarn, spots or stains, and other physical and manufacturing defects. Provide carpet materials and treatments as reasonably nonallergenic and free of other recognized health hazards. Provide a static control construction on all grade carpets which gives adequate durability and performance. Submit manufacturer's catalog data and printed documentation stating physical characteristics, durability, resistance to fading, and flame resistance characteristics for each type of carpet material and installation accessory. Submit manufacturer's Product Data for a.) Carpet, c.) Carpet Cushion. Also, submit Samples of the following:

a. Carpet: Two "Production Quality" samples 18 by 18 inches of each carpet proposed for use, showing quality, pattern, and color specified

c. Carpet Cushion: Two samples minimum 6 by 6 inches

2.1.1 Recycled Content

Carpeting must contain a minimum of 20 percent recycled content. Provide data identifying percentage of recycled content for carpeting.

2.1.2 PFOS/PFOA Requirements

Provide materials free from perfluorooctanesulfonic acid (PFOS) or perfluorooctanoic acid (PFOA).

2.1.3 Indoor Air Quality Requirements

Products must meet emissions requirements of CDPH SECTION 01350. Provide certification or validation of indoor air quality for carpet.

2.1.4 Physical Characteristics for Modular Tile Carpet

2.1.4.1 Carpet Construction

Tufted

2.1.4.2 Type

Modular carpet tile 24 by 24, 36 by 12, or 48 by 12 inch square with 0.15 percent growth/shrink rate in accordance with ISO 2551.

2.1.4.3 Pile Type

Level-loopor Multilevel loop

2.1.4.4 Pile Fiber

Commercial 100 percent branded (federally registered trademark)nylon continuous filament .

2.1.4.5 Gauge or Pitch

Minimum 1/12 inch in accordance with ASTM D5793

2.1.4.6 Stitches or Rows/Wires

Minimum 4.72 per square inch

2.1.4.7 Surface Pile Weight

Minimum 19 ounces per square yard. This does not include weight of backings. Determine weight in accordance with ASTM D5848.

2.1.4.8 Pile Thickness

Minimum .25 inch in accordance with ASTM D6859

2.1.4.9 Dye Method

Solution dyed

2.1.4.10 Backing Materials

Provide primary backing materials like synthetic material. Provide secondary backing to suit project requirements of those customarily used and accepted by the trade for each type of carpet.

2.2 PERFORMANCE REQUIREMENTS

2.2.1 Texture Appearance Retention Rating (TARR)

Provide carpet with a greater than or equal to 3.0 (Heavy) TARR traffic level classification in accordance with ASTM D7330 or CRI Test Method 103.

2.2.2 Static Control

Provide static control to permanently regulate static buildup to less than 3.5 kV when tested at 20 percent relative humidity and 70 degrees F in accordance with AATCC 134.

2.2.3 Flammability and Critical Radiant Flux Requirements

Comply with 16 CFR 1630 or ASTM D2859. Provide carpet in corridors and exits with a minimum average critical radiant flux of 0.22 watts per square centimeter when tested in accordance with ASTM E648 or NFPA 253.

2.2.4 Tuft Bind

Comply with ASTM D1335 for tuft bind force required to pull a tuft or loop free from carpet backing with a minimum 8 pound average force for modular carpet tile.

2.2.5 Colorfastness to Crocking

Comply dry and wet crocking with AATCC 165 and with a Class 4 minimum rating on the AATCC Color Transference Chart for all colors.

2.2.6 Colorfastness to Light

Comply colorfastness to light with AATCC 16.1, Test Option E "Water-Cooled Xenon-Arc Lamp, Continuous Light" and with a minimum 4 gray scale rating after 40 hours.

2.2.7 Colorfastness to Water

Comply colorfastness to water with AATCC 107 and with a minimum 4.0 gray scale rating and a minimum 4.0 transfer scale rating.

2.2.8 Breaking Strength

ASTM D2646 dry breaking strength, not less than 100 lbf.

2.2.9 Delamination Strength

Provide delamination ASTM D3936 strength for tufted carpet with a secondary back of minimum 3.5 lbs/inch.

2.3 ADHESIVES AND CONCRETE PRIMER

Comply with applicable regulations regarding toxic and hazardous materials. Provide water resistant, mildew resistant, nonflammable, and nonstaining adhesives and concrete primers for carpet installation as required by the carpet manufacturer. Provide release adhesive for modular tile carpet as recommended by the carpet manufacturer. Provide adhesives flashpoint of minimum 140 degrees F in accordance with ASTM D3278. Non-aerosol adhesive products used on the interior of the building (defined as inside of the weatherproofing system) must meet either emissions requirements of CDPH SECTION 01350 (limit requirements for either office or classroom spaces regardless of space type) or VOC content requirements of SCAQMD Rule 1168. Aerosol adhesive products used on the interior of the building (defined as inside of the weatherproofing system) must meet either emissions requirements of CDPH SECTION 01350 (limit requirements for either office or classroom spaces regardless of space type) or VOC content requirements of GS-36. Provide validation of indoor air quality for aerosol adhesives. Provide validation of indoor air quality for non-aerosol adhesives. Concrete primer products used on the interior of the building (defined as inside of the weatherproofing system) must meet either emissions requirements of CDPH SECTION 01350 (limit requirements for either office or classroom spaces regardless of space type) or VOC content requirements of SCAQMD Rule 1113. Provide validation of indoor air quality for concrete primer.

2.4 COLOR, TEXTURE, AND PATTERN

Provide color, texture, and pattern in accordance with Section 09 06 00 SCHEDULES FOR FINISHES.

PART 3 EXECUTION

3.1 SURFACE PREPARATION

Do not install carpet on surfaces that are unsuitable and will prevent a proper installation. Prepare subfloor in accordance with flooring manufacturer's recommended instructions. Repair holes, cracks, depressions, or rough areas using material recommended by the carpet or adhesive manufacturer. Free floor of any foreign materials and sweep clean. Before beginning work, test subfloor with glue and carpet to determine "open time" and bond. Submit three copies of the manufacturer's printed Installation instructions for the carpet, including Surface Preparation, seaming techniques, and recommended adhesives and tapes.

3.2 MOISTURE AND ALKALINITY TESTS

Test concrete slab for excessive moisture content and excessive alkalinity in accordance with CRI 104/CRI 105, ASTM F1869, and ASTM F2170. Submit three copies of reports of Moisture and Alkalinity Tests including content of concrete slab stating date of test, person conducting the test, and the area tested. Perform tests for each 1000 sq. ft.. Perform a minimum of three evenly spaced tests of each installation area. For anhydrous calcium chloride test, confirm substrates have a moisture-vapor-emission rate less than 3 lb of water/1000 sq. ft.. For relative humidity tests confirm substrate relative humidity levels are less than 75 percent.

3.3 PREPARATION OF CONCRETE SUBFLOOR

Do not commence installation of the carpeting until concrete substrate is at least 90 days old. Prepare the concrete surfaces in accordance with the carpet manufacturer's instructions. Match carpet, when required, and adhesives to prevent off-gassing to a type of curing compounds, leveling agents, and concrete sealer.

3.4 INSTALLATION

Isolate area of installation from rest of building. Perform all work by manufacturer's approved installers. Conduct installation in accordance with the manufacturer's printed instructions and CRI 104/CRI 105. Protect edges of carpet meeting hard surface flooring with molding and install in accordance with the molding manufacturer's printed instructions. Follow ventilation, personal protection, and other safety precautions recommended by the adhesive manufacturer. Continue ventilation during installation and for at least 72 hours following installation. Do not permit traffic or movement of furniture or equipment in carpeted area for 24 hours after installation. Complete other work which would damage the carpet prior to installation of carpet. Submit three copies of Installation Drawings for Carpet indicating areas receiving carpet, carpet types, patterns, direction of pile, and location of seams.

Do not install building construction materials that show visual evidence of biological growth.

3.4.1 Modular Tile Installation

Install modular tiles with releasable adhesive and snug joints. Use monolithic installation method. Comply with manufacturer installation instructions for required drying time of releasable adhesive so it sets up properly. Provide accessibility to the subfloor where required.

3.5 CLEANING AND PROTECTION

Submit three copies of carpet manufacturer's maintenance instructions describing recommended type of cleaning equipment and material, spotting and cleaning methods, and cleaning cycles.

3.5.1 Cleaning

As specified in Section 01 78 00 CLOSEOUT SUBMITTALS. After installation of the carpet, remove debris, scraps, and other foreign matter. Remove soiled spots and adhesive from the face of the carpet with appropriate spot remover. Cut off and remove protruding face yarn. Vacuum carpet clean with a high-efficiency particulate air (HEPA) filtration vacuum.

3.5.2 Protection

Protect the installed carpet from soiling and damage with heavy, reinforced, nonstaining kraft paper, plywood, or hardboard sheets. Lap and secure edges of kraft paper protection to provide a continuous cover. Restrict traffic for at least 48 hours. Remove protective covering when directed by the Contracting Officer.

3.6 REMNANTS

Manage waste as specified in the Waste Management Plan. Remove non-retained scraps from site and recycle appropriately.

3.7 MAINTENANCE

3.7.1 Extra Materials

Provide extra material from same dye lot consisting of uncut modular carpet tiles for future maintenance. Provide a minimum of three percent of total square yards of each carpet type, pattern, and color.

-- End of Section --

This page was intentionally left blank for duplex printing.

SECTION TABLE OF CONTENTS

DIVISION 09 - FINISHES

SECTION 09 90 00

PAINTS AND COATINGS

PART 1 GENERAL

1.1 RELATED REQUIREMENTS
1.1.1 Painting Included
1.1.1.1 Interior Painting
1.1.2 Painting Excluded
1.1.3 Mechanical and Electrical Painting
1.2 REFERENCES
1.3 DEFINITIONS
1.3.1 Qualification Testing
1.3.2 Batch Quality Conformance Testing
1.3.3 Coating
1.3.4 DFT or dft
1.3.5 DSD
1.3.6 INT
1.3.7 Loose Paint
1.3.8 mil / mils
1.3.9 MPI Gloss Levels
1.3.10 MPI System Number
1.3.11 Paint
1.3.12 RIN
1.4 SCHEDULING
1.5 SUBMITTALS
1.6 QUALITY ASSURANCE
1.6.1 Regulatory Requirements
1.6.1.1 Environmental Protection
1.6.1.2 Lead Content
1.6.1.3 Chromate Content
1.6.1.4 Asbestos Content
1.6.1.5 Mercury Content
1.6.1.6 Silica
1.6.1.7 Human Carcinogens
1.6.1.8 Carbon Based Fibers / Tubes
1.6.2 SSPC QP 1 Certification
1.6.3 Approved Products List
1.6.4 Paints and Coatings Indoor Air Quality Certifications
1.6.5 Field Samples and Tests
1.6.5.1 Sampling Procedure
1.6.5.2 Testing Procedure
1.7 PACKAGING, LABELING, AND STORAGE
1.8 SAFETY AND HEALTH
1.8.1 Toxic Materials
1.9 ENVIRONMENTAL REQUIREMENTS
1.9.1 Coatings

PART 2 PRODUCTS

2.1 MATERIALS
2.2 COLOR SELECTION OF FINISH COATS

PART 3 EXECUTION

3.1 PROTECTION OF AREAS AND SPACES NOT TO BE PAINTED
3.2 SURFACE PREPARATION
3.2.1 Additional Requirements for Preparation of Surfaces With Existing Coatings
3.2.2 Existing Coated Surfaces with Minor Defects
3.2.3 Substrate Repair
3.3 APPLICATION
3.3.1 Coating Application
3.3.2 Mixing and Thinning of Paints
3.3.3 Two-Component Systems
3.3.4 Coating Systems
3.4 INSPECTION AND ACCEPTANCE
3.5 WASTE MANAGEMENT
3.6 PAINT TABLES
3.6.1 Interior Paint Tables
3.6.1.1 MPI Division 9: Interior Plaster, Gypsum Board, Textured Surfaces Paint Table

-- End of Section Table of Contents --

SECTION 09 90 00

PAINTS AND COATINGS

PART 1 GENERAL

Contractor is responsible for proper prep and new paint on all walls in the office area. Contractor to supply and install new coatings per this specification.

1.1 RELATED REQUIREMENTS

1.1.1 Painting Included

Where a space or surface is indicated to be painted, include the following unless indicated otherwise.

a. Surfaces behind portable objects and surface mounted articles readily detachable by removal of fasteners, such as screws and bolts.

b. New factory finished surfaces that require identification or color coding and factory finished surfaces that are damaged during performance of the work.

c. Existing coated surfaces that are damaged during performance of the work.

1.1.1.1 Interior Painting

Includes new surfaces, existing uncoated surfaces, and existing coated surfaces of the building and appurtenances as indicated and existing coated surfaces made bare by cleaning operations. Where a space or surface is indicated to be painted, include the following items, unless indicated otherwise.

a. Exposed columns, girders, beams, joists, and metal deck; and

b. Other contiguous surfaces.

1.1.2 Painting Excluded

Do not paint the following unless indicated otherwise.

a. Surfaces concealed and made inaccessible by panelboards, fixed ductwork, machinery, and equipment fixed in place.

b. Surfaces in concealed spaces. Concealed spaces are defined as enclosed spaces above suspended ceilings, furred spaces, attic spaces, crawl spaces, elevator shafts and chases.

c. Steel to be embedded in concrete.

d. Copper, stainless steel, aluminum, anodized aluminum, brass, and lead except existing coated surfaces.

e. Hardware, fittings, and other factory finished items.

1.1.3 Mechanical and Electrical Painting

Includes field coating of interior new and existing surfaces.

a. Where a space or surface is indicated to be painted, include the following items unless indicated otherwise.

(1) Exposed piping, conduit, and ductwork;

(2) Supports, hangers, air grilles, and registers;

(3) Miscellaneous metalwork and insulation coverings.

b. Do not paint the following, unless indicated otherwise:

(1) New zinc-coated, aluminum, and copper surfaces under insulation

(2) New aluminum jacket on piping

(3) New interior ferrous piping under insulation.

1.2 REFERENCES

The publications listed below form a part of this specification to the extent referenced. The publications are referred to within the text by the basic designation only.

AMERICAN CONFERENCE OF GOVERNMENTAL INDUSTRIAL HYGIENISTS (ACGIH)

ACGIH 0100	(2017; Suppl 2020) Documentation of the Threshold Limit Values and Biological Exposure Indices

ASTM INTERNATIONAL (ASTM)

ASTM D235	(2022) Standard Specification for Mineral Spirits (Petroleum Spirits) (Hydrocarbon Dry Cleaning Solvent)
ASTM D523	(2014; R 2018) Standard Test Method for Specular Gloss
ASTM D4214	(2007; R 2015) Standard Test Method for Evaluating the Degree of Chalking of Exterior Paint Films

CENTERS FOR DISEASE CONTROL AND PREVENTION (CDC)

Intelligence Bulletin 65	(2013) Occupational Exposure to Carbon Nanotubes and Nanofibers

MASTER PAINTERS INSTITUTE (MPI)

MPI 44	(2016) Latex, Interior, (MPI Gloss Level 2)
MPI 50	(2015) Primer Sealer, Latex, Interior
MPI 52	(2016) Latex, Interior, (MPI Gloss Level 3)

MPI 54	(2016) Latex, Interior, Semi-Gloss (MPI Gloss Level 5)
MPI ASM	(2019) Architectural Painting Specification Manual
MPI GPS-1-14	(2014) Green Performance Standard GPS-1-14
MPI GPS-2-14	(2014) Green Performance Standard GPS-2-14
MPI MRM	(2015) Maintenance Repainting Manual

SOCIETY FOR PROTECTIVE COATINGS (SSPC)

SSPC Glossary	(2011) SSPC Protective Coatings Glossary
SSPC PA 1	(2024) Shop, Field, and Maintenance Coating of Metals
SSPC QP 1	(2019) Standard Procedure for Evaluating the Qualifications of Industrial/Marine Painting Contractors (Field Application to Complex Industrial Steel Structures and Other Metal Components)

U.S. ARMY CORPS OF ENGINEERS (USACE)

EM 385-1-1	(2024) Safety -- Safety and Occupational Health (SOH) Requirements

U.S. GENERAL SERVICES ADMINISTRATION (GSA)

FED-STD-313	(2018) Material Safety Data, Transportation Data and Disposal Data for Hazardous Materials Furnished to Government Activities

U.S. NATIONAL ARCHIVES AND RECORDS ADMINISTRATION (NARA)

29 CFR 1910.1000	Air Contaminants

1.3 DEFINITIONS

1.3.1 Qualification Testing

Qualification testing is the performance of all test requirements listed in the product specification. This testing is accomplished by MPI to qualify each product for the MPI Approved Product List, and may also be accomplished by Contractor's third-party testing lab if an alternative to Batch Quality Conformance Testing by MPI is desired.

1.3.2 Batch Quality Conformance Testing

Batch quality conformance testing determines that the product provided is the same as the product qualified to the appropriate product specification. This testing must be accomplished by an MPI testing lab.

1.3.3 Coating

SSPC Glossary; (1) A liquid, liquefiable, or mastic composition that is converted to a solid protective, decorative, or functional adherent film after application as a thin layer; (2) Generic term for paint, lacquer, enamel.

1.3.4 DFT or dft

Dry film thickness, the film thickness of the fully cured, dry paint or coating.

1.3.5 DSD

Degree of Surface Degradation, the MPI system of defining degree of surface degradation. Five levels are generically defined under the Assessment sections in the MPI MRM, MPI Maintenance Repainting Manual.

1.3.6 INT

MPI short term designation for an interior coating system.

1.3.7 Loose Paint

Paint or coating that can be removed with a dull putty knife.

1.3.8 mil / mils

The English measurement for 0.001 in or one one-thousandth of an inch.

1.3.9 MPI Gloss Levels

MPI system of defining gloss. Seven gloss levels (G1 to G7) are generically defined under the Evaluation sections of the MPI Manuals. Traditionally, Flat refers to G1/G2, Eggshell refers to G3, Semigloss refers to G5, and Gloss refers to G6.

Gloss levels are defined by MPI as follows:

Gloss Level	Description	Units at 60 degree angle	Units at 80 degree angle
G1	Matte or Flat	0 to 5	10 max
G2	Velvet	0 to 10	10 to 35
G3	Eggshell	10 to 25	10 to 35
G4	Satin	20 to 35	35 min
G5	Semi-Gloss	35 to 70	
G6	Gloss	70 to 85	
G7	High Gloss		

Gloss is tested in accordance with ASTM D523. Historically, the Government has used Flat (G1 / G2), Eggshell (G3), Semi-Gloss (G5), and Gloss (G6).

1.3.10 MPI System Number

The MPI coating system number in each MPI Division found in either the MPI Architectural Painting Specification Manual or the Maintenance Repainting Manual and defined as an interior system (INT/RIN).

1.3.11 Paint

SSPC Glossary; (1) Any pigmented liquid, liquefiable, or mastic composition designed for application to a substrate in a thin layer that is converted to an opaque solid film after application. Used for protection, decoration, identification, or to serve some other functional purposes; (2) Application of a coating material.

1.3.12 RIN

MPI short term designation for an interior coating system used in repainting projects or over existing coating systems.

1.4 SCHEDULING

Allow paint, polyurethane, varnish, and wood stain installations to cure prior to the installation of materials that adsorb VOCs, including carpets, textiles, unprimed gypsum wallboard, acoustical ceiling panels.

1.5 SUBMITTALS

Government approval is required for submittals with a "G" classification. Submittals not having a "G" classification are for Contractor Quality Control approval. Submittals not having a "G" classification are for information only. When used, a code following the "G" classification identifies the office that will review the submittal for the Government. Submit the following in accordance with Section 01 33 00 SUBMITTAL PROCEDURES:

Samples of specified materials may be taken and tested for compliance with specification requirements.

SD-02 Shop Drawings

Piping Identification

SD-03 Product Data

Coating; G, DO

Product Data Sheets

Sealant

SD-04 Samples

Color; G, DO

SD-07 Certificates

Indoor Air Quality for Paints and Primers

SD-08 Manufacturer's Instructions

Application Instructions

Mixing

Manufacturer's Safety Data Sheets

SD-10 Operation and Maintenance Data

Coatings, Data Package 1

1.6 QUALITY ASSURANCE

1.6.1 Regulatory Requirements

1.6.1.1 Environmental Protection

In addition to requirements specified elsewhere for environmental protection, provide coating materials that conform to the restrictions of the local Air Pollution Control District and regional jurisdiction. Notify Contracting Officer of any paint specified herein which fails to conform.

1.6.1.2 Lead Content

Do not use coatings having a lead content over 0.06 percent by weight of nonvolatile content.

1.6.1.3 Chromate Content

Do not use coatings containing zinc-chromate or strontium-chromate.

1.6.1.4 Asbestos Content

Provide asbestos-free materials.

1.6.1.5 Mercury Content

Provide materials free of mercury or mercury compounds.

1.6.1.6 Silica

Provide abrasive blast media containing no free crystalline silica.

1.6.1.7 Human Carcinogens

Provide materials that do not contain ACGIH 0100 confirmed human carcinogens (A1) or suspected human carcinogens (A2).

1.6.1.8 Carbon Based Fibers / Tubes

Materials must not contain carbon based fibers such as carbon nanotubes or carbon nanofibers. Intelligence Bulletin 65 ranks toxicity of carbon nanotubes on a par with asbestos.

1.6.2 SSPC QP 1 Certification

Contractors that perform surface preparation or coating application on

steel substrates must be certified by the Society for Protective Coatings (formerly Steel Structures Painting Council) (SSPC) to the requirements of SSPC QP 1 prior to Contract award, and must remain certified while accomplishing any surface preparation or coating application. If a Contractor's certification expires, the firm will not be allowed to perform any work until the certification is reissued. Requests for extension of time for any delay to the completion of the project due to an inactive certification will not be considered. Notify the Contracting Officer of any change in Contractor certification status. Notify the Contracting Officer of all scheduled and unannounced on-site audits from SSPC and furnish a copy of all audit reports.

1.6.3 Approved Products List

The current MPI, "Approved Product List" which lists paint by brand, label, product name and product code as of the date of Contract award, will be used to determine compliance with the submittal requirements of this specification. The Contractor may choose to use a subsequent MPI "Approved Product List", however, only one list may be used for the entire Contract and each coating system is to be from a single manufacturer. Provide all coats on a particular substrate from a single manufacturer. No variation from the MPI Approved Products List is acceptable.

1.6.4 Paints and Coatings Indoor Air Quality Certifications

Provide paint and coating products certified to meet indoor air quality requirements by MPI GPS-1-14, MPI GPS-2-14 or provide certification by other third-party programs. Provide current product certification documentation from certification body.

Provide certification of Indoor Air Quality for Paints and Primers. Submit required indoor air quality certifications in one submittal package.

1.6.5 Field Samples and Tests

The Contracting Officer may choose up to two coatings that have been delivered to the site to be tested at no cost to the Government. Take samples of each chosen product as specified in the paragraph SAMPLING PROCEDURE. Test each chosen product as specified in the paragraph TESTING PROCEDURE. Remove products from the job site which do not conform, and replace with new products that conform to the referenced specification. Test replacement products that failed initial testing as specified in the paragraph TESTING PROCEDURE at no cost to the Government.

1.6.5.1 Sampling Procedure

Select paint at random from the products that have been delivered to the job site for sample testing. The Contractor must provide one quart samples of the selected paint materials. Take samples in the presence of the Contracting Officer, and label, and identify each sample. Provide labels in accordance with the paragraph PACKAGING, LABELING, AND STORAGE.

1.6.5.2 Testing Procedure

Provide Batch Quality Conformance Testing for specified products, as defined by and performed by MPI. As an alternative to Batch Quality Conformance Testing, the Contractor may provide Qualification Testing for specified products above to the appropriate MPI product specification, using the third-party laboratory approved under the paragraph

QUALIFICATION TESTING laboratory for coatings. Include the backup data and summary of the test results within the qualification testing lab report. Provide a summary listing of all the reference specification requirements and the result of each test. Clearly indicate in the summary whether the tested paint meets each test requirement. Note that Qualification Testing may take 4 to 6 weeks to perform, due to the extent of testing required.

Submit name, address, telephone number, FAX number, and e-mail address of the independent third party laboratory selected to perform testing of coating samples for compliance with specification requirements. Submit documentation that laboratory is regularly engaged in testing of paint samples for conformance with specifications, and that employees performing testing are qualified. If MPI is chosen to perform the Batch Quality Conformance testing, the above submittal information is not required, only a letter is required from the Contractor stating that MPI will perform the testing.

1.7 PACKAGING, LABELING, AND STORAGE

Provide paints in sealed containers that legibly show the Contract specification number, designation name, formula or specification number, batch number, color, quantity, date of manufacture, manufacturer's formulation number, manufacturer's directions including any warnings and special precautions, and name and address of manufacturer. Furnish pigmented paints in containers not larger than 5 gallons. Store paints and thinners in accordance with the manufacturer's written directions, and as a minimum, stored off the ground, under cover, with sufficient ventilation to prevent the buildup of flammable vapors, and at temperatures between 40 to 95 degrees F. Do not store paint, polyurethane, varnish, or wood stain products with materials that have a high capacity to absorb VOC emissions. Do not store paint, polyurethane, varnish, or wood stain products in occupied spaces.

1.8 SAFETY AND HEALTH

Comply with applicable Federal, State, and local laws and regulations, and with the ACCIDENT PREVENTION PLAN, including the Activity Hazard Analysis as specified in Section 01 35 26 GOVERNMENTAL SAFETY REQUIREMENTS and in Appendix A of EM 385-1-1. Include in the Activity Hazard Analysis the potential impact of painting operations on painting personnel and on others involved in and adjacent to the work zone.

1.8.1 Toxic Materials

To protect personnel from overexposure to toxic materials, conform to the most stringent guidance of:

a. The applicable manufacturer's Safety Data Sheets (SDS) or local regulation.

b. 29 CFR 1910.1000.

c. ACGIH 0100, threshold limit values.

Submit manufacturer's Safety Data Sheets for coatings, solvents, and other potentially hazardous materials, as defined in FED-STD-313.

1.9 ENVIRONMENTAL REQUIREMENTS

Comply, at minimum, with manufacturer recommendations for space ventilation during and after installation.

1.9.1 Coatings

Do not apply coating when air or substrate conditions are:

a. Less than 5 degrees F above dew point;

b. Below 50 degrees F or over 95 degrees F, unless specifically pre-approved by the Contracting Officer and the product manufacturer. Do not, under any circumstances, violate the manufacturer's application recommendations.

PART 2 PRODUCTS

2.1 MATERIALS

Conform to the coating specifications and standards referenced in PART 3. Submit Product Data Sheets for specified coatings and solvents. Provide preprinted cleaning and maintenance instructions for all coating systems. Submit Manufacturer's Instructions on Mixing: Detailed mixing instructions, minimum and maximum application temperature and humidity, pot life, and curing and drying times between coats.

2.2 COLOR SELECTION OF FINISH COATS

Provide colors of finish coats as indicated or specified. Allow Contracting Officer to select colors not indicated or specified. Manufacturers' names and color identification are used for the purpose of color identification only. Named products are acceptable for use only if they conform to specified requirements. Products of other manufacturers are acceptable if the colors are approximately the colors indicated and the product conforms to specified requirements.

Provide color, texture, and pattern of wall coating systems in accordance with Section 09 06 00 SCHEDULES FOR FINISHES. Submit manufacturer's samples of paint colors. Cross reference color samples to color scheme as indicated. Submit color stencil codes. Tint each coat progressively darker to enable confirmation of the number of coats.

PART 3 EXECUTION

3.1 PROTECTION OF AREAS AND SPACES NOT TO BE PAINTED

Prior to surface preparation and coating applications, remove, mask, or otherwise protect hardware, hardware accessories, machined surfaces, radiator covers, plates, lighting fixtures, public and private property, and other such items not to be coated that are in contact with surfaces to be coated. Following completion of painting, reinstall removed items by workmen skilled in the trades. Restore surfaces contaminated by coating materials, to original condition and repair damaged items.

3.2 SURFACE PREPARATION

Remove dirt, splinters, loose particles, grease, oil, disintegrated coatings, and other foreign matter and substances deleterious to coating

performance as specified for each substrate before application of paint or surface treatments. Remove oil and grease prior to mechanical cleaning. Schedule cleaning so that dust and other contaminants will not fall on wet, newly painted surfaces. Spot-prime exposed ferrous metals such as nail heads on or in contact with surfaces to be painted with water-thinned paints, with a suitable corrosion-inhibitive primer capable of preventing flash rusting and compatible with the coating specified for the adjacent areas. Refer to MPI ASM and MPI MRM for additional more specific substrate preparation requirements.

3.2.1 Additional Requirements for Preparation of Surfaces With Existing Coatings

Before application of coatings, perform the following on surfaces covered by soundly-adhered coatings, defined as those which cannot be removed with a putty knife:

a. Test existing finishes for lead before sanding, scraping, or removing. If lead is present, refer to paragraph Toxic Materials.

b. Wipe previously painted surfaces to receive solvent-based coatings, except stucco and similarly rough surfaces clean with a clean, dry cloth saturated with mineral spirits, ASTM D235 or as specified in MPI MRM. Wipe the surfaces dry with a clean, dry, lint free cloth. Wipe immediately preceding the application of the first coat of any coating, unless specified otherwise.

c. Sand existing glossy surfaces to be painted to reduce gloss. Brush, and wipe clean with a damp cloth to remove dust.

d. The requirements specified are minimum. Comply also with the application instructions of the paint manufacturer and specific surface preparation requirements as outlined in MPI MRM Interior Surface Preparation.

e. Thoroughly clean previously painted surfaces of all grease, dirt, dust or other foreign matter.

f. Remove blistering, cracking, flaking and peeling or otherwise deteriorated coatings.

g. Remove chalk so that when tested in accordance with ASTM D4214, the chalk resistance rating is no less than 8.

h. Roughen slick surfaces. Repair damaged areas such as, but not limited to, nail holes, cracks, chips, and spalls with suitable material to match adjacent undamaged areas.

i. Feather and sand smooth edges of chipped paint.

j. Clean rusty metal surfaces in accordance with SSPC requirements. Use solvent, mechanical, or chemical cleaning methods to provide surfaces suitable for painting.

k. Provide new, proposed coatings that are compatible with existing coatings.

3.2.2 Existing Coated Surfaces with Minor Defects

Sand, spackle, and treat minor defects to render them smooth. Minor defects are defined as scratches, nicks, cracks, gouges, spalls, alligatoring, chalking, and irregularities due to partial peeling of previous coatings.

3.2.3 Substrate Repair

a. Repair substrate surface damaged during coating removal;

b. Sand edges of adjacent soundly-adhered existing coatings so they are tapered as smooth as practical to areas involved with coating removal; and

c. Clean and prime the substrate as specified.

3.3 APPLICATION

3.3.1 Coating Application

a. Comply with applicable federal, state and local laws enacted to ensure compliance with Federal Clean Air Standards. Apply coating materials in accordance with SSPC PA 1. SSPC PA 1 methods are applicable to all substrates, except as modified herein.

b. At the time of application, paint must show no signs of deterioration. Maintain uniform suspension of pigments during application.

c. Unless otherwise specified or recommended by the paint manufacturer, paint may be applied by brush, roller, or spray. Use trigger operated spray nozzles for water hoses. Use rollers for applying paints and enamels of a type designed for the coating to be applied and the surface to be coated. Wear protective clothing and respirators when applying oil-based paints or using spray equipment with any paints.

d. Only apply paints, except water-thinned types, to surfaces that are completely free of moisture as determined by sight or touch.

e. Thoroughly work coating materials into joints, crevices, and open spaces. Pay special attention to ensure that all edges, corners, crevices, welds, and rivets receive a film thickness equal to that of adjacent painted surfaces.

f. Apply each coat of paint so that dry film is of uniform thickness and free from runs, drops, ridges, waves, pinholes or other voids, laps, brush marks, and variations in color, texture, and finish. Completely hide all blemishes.

g. Touch up damaged coatings before applying subsequent coats.

m. Drying Time: Allow time between coats, as recommended by the coating manufacturer, to permit thorough drying, but not to present topcoat adhesion problems. Provide each coat in specified condition to receive next coat.

n. Primers, and Intermediate Coats: Do not allow primers or intermediate coats to dry more than 30 days, or longer than recommended by

manufacturer, before applying subsequent coats. Follow manufacturer's recommendations for surface preparation if primers or intermediate coats are allowed to dry longer than recommended by manufacturers of subsequent coatings. Cover each preceding coat or surface completely by ensuring visually perceptible difference in shades of successive coats.

o. Finished Surfaces: Provide finished surfaces free from runs, drops, ridges, waves, laps, brush marks, and variations in colors.

3.3.2 Mixing and Thinning of Paints

Reduce paints to proper consistency by adding fresh paint, except when thinning is mandatory to suit surface, temperature, weather conditions, application methods, or for the type of paint being used. Obtain written permission from the Contracting Officer to use thinners. Verify that the written permission includes quantities and types of thinners to use.

When thinning is allowed, thin paints immediately prior to application with not more than one pint of suitable thinner per gallon. The use of thinner does not relieve the Contractor from obtaining complete hiding, full film thickness, or required gloss. Thinning cannot cause the paint to exceed limits on volatile organic compounds. Do not mix paints of different manufacturers.

3.3.3 Two-Component Systems

Mix two-component systems in accordance with manufacturer's instructions. Follow recommendation by the manufacturer for any thinning of the first coat to ensure proper penetration and sealing for each type of substrate.

3.3.4 Coating Systems

a. Systems by Substrates: Apply coatings that conform to the respective specifications listed in the following Tables:

Table for Interior Applications	
MPI Division	Substrate Application
MPI Division 3	Interior Concrete Paint Table
MPI Division 4	Interior Concrete Masonry Units Paint Table
MPI Division 5	Interior Metal, Ferrous and Non-Ferrous Paint Table
MPI Division 6	Interior Wood Paint Table
MPI Division 9	Interior Plaster, Gypsum Board, Textured Surfaces Paint Table

b. Minimum Dry Film Thickness (DFT): Apply paints, primers, varnishes, enamels, undercoats, and other coatings to a minimum dry film thickness of 1.5 mil each coat unless specified otherwise in the Tables. Coating thickness, where specified, refers to the minimum dry film thickness.

c. Coatings for Surfaces Not Specified Otherwise: Coat unspecified surfaces the same as surfaces having similar conditions of exposure.

d. Existing Surfaces Damaged During Performance of the Work, Including New Patches In Existing Surfaces: Coat surfaces with the following:

(1) One coat of primer.

(2) One coat of undercoat or intermediate coat.

(3) One topcoat to match adjacent surfaces.

e. Existing Coated Surfaces To Be Painted: Apply coatings conforming to the respective specifications listed in the Tables herein, except that pretreatments, sealers and fillers need not be provided on surfaces where existing coatings are soundly adhered and in good condition. Do not omit undercoats or primers.

3.4 INSPECTION AND ACCEPTANCE

In addition to meeting previously specified requirements, demonstrate mobility of moving components, including swinging and sliding doors, cabinets, and windows with operable sash, for inspection by the Contracting Officer. Perform this demonstration after appropriate curing and drying times of coatings have elapsed and prior to invoicing for final payment.

3.5 WASTE MANAGEMENT

As specified in the Waste Management Plan and as follows. Do not use kerosene or any such organic solvents to clean up water based paints. Properly dispose of paints or solvents in designated containers. Close and seal partially used containers of paint to maintain quality as necessary for reuse. Store in protected, well-ventilated, fire-safe area at moderate temperature. Place materials defined as hazardous or toxic waste in designated containers Set aside extra paint for future color matches or reuse by the Government.

3.6 PAINT TABLES

All DFT's are minimum values. Acceptable products are listed in the MPI Green Approved Products List, available at https://www.mpi.net/APL/index.asp.

3.6.1 Interior Paint Tables

3.6.1.1 MPI Division 9: Interior Plaster, Gypsum Board, Textured Surfaces Paint Table

A. Interior New and Existing, previously painted Plaster and Wallboard not otherwise specified

Latex					
New	Existing, previously painted	Primer	Intermediate	Topcoat	System DFT

MPI INT 9.2A-G2 (Flat)	RIN 9.2A-G2 (Flat)	MPI 50	MPI 44	MPI 44	4 mils
MPI INT 9.2A-G3 (Eggshell)	RIN 9.2A-G3 (Eggshell)	MPI 50	MPI 52	MPI 52	4 mils
MPI INT 9.2A-G5 (Semigloss)	RIN 9.2A-G5 (Semigloss)	MPI 50	MPI 54	MPI 54	4 mils
Topcoat: Coating to match adjacent surfaces.					

-- End of Section --

SECTION TABLE OF CONTENTS

DIVISION 10 - SPECIALTIES

SECTION 10 44 16

FIRE EXTINGUISHERS

PART 1 GENERAL

1.1 REFERENCES
1.2 SUBMITTALS
1.3 DELIVERY, STORAGE, AND HANDLING
1.3.1 Samples
1.4 WARRANTY

PART 2 PRODUCTS

2.1 SYSTEM DESCRIPTION
2.1.1 Types
2.1.2 Material
2.1.3 Size
2.1.4 Accessories
2.2 EQUIPMENT
2.2.1 Cabinets
2.2.1.1 Material
2.2.1.2 Type
2.2.1.3 Size

PART 3 EXECUTION

3.1 INSTALLATION
3.2 PROTECTION
3.2.1 Repairing
3.2.2 Cleaning

-- End of Section Table of Contents --

SECTION 10 44 16

FIRE EXTINGUISHERS

PART 1 GENERAL

1.1 REFERENCES

The publications listed below form a part of this specification to the extent referenced. The publications are referred to within the text by the basic designation only.

ASTM INTERNATIONAL (ASTM)

ASTM E814	(2024) Standard Test Method for Fire Tests of Penetration Firestop Systems

NATIONAL FIRE PROTECTION ASSOCIATION (NFPA)

NFPA 1	(2024) Fire Code
NFPA 10	(2022; ERTA 1 2021) Standard for Portable Fire Extinguishers
NFPA 99	(2024, TIA 24-2) Health Care Facilities Code
NFPA 101	(2024) Life Safety Code
NFPA 241	(2022; ERTA 22-1) Standard for Safeguarding Construction, Alteration, and Demolition Operations

U.S. NATIONAL ARCHIVES AND RECORDS ADMINISTRATION (NARA)

29 CFR 1910.157	(2003) Portable Fire Extinguishers

UL SOLUTIONS (UL)

UL 299	(2024) Dry Chemical Fire Extinguishers

1.2 SUBMITTALS

Government approval is required for submittals with a "G" classification. Submittals not having a "G" classification are for information only. When used, a code following the "G" classification identifies the office that will review the submittal for the Government. Submit the following in accordance with Section 01 33 00 SUBMITTAL PROCEDURES:

SD-02 Shop Drawings

Fire Extinguishers; G, RO

Accessories; G, RO

Cabinets; G, RO

SD-03 Product Data

Fire Extinguishers; G, RO

Accessories; G, RO

Cabinets; G, RO

Replacement Parts List; G, RO

SD-04 Samples

Equipment Samples; G, RO

SD-07 Certificates

Fire Extinguishers Certifications; G, RO

Manufacturer's Warranty with Inspection Tag; G, RO

1.3 DELIVERY, STORAGE, AND HANDLING

Protect materials from weather, soil, and damage during delivery, storage, and construction.

Deliver materials in their original packages, containers, or bundles bearing the brand name and the name and type of the material.

1.3.1 Samples

Provide the following equipment samples: One of each type of fire extinguisher being installed; one full-sized sample of each type of cabinet being installed.

Use approved samples for installation, with proper identification and storage.

1.4 WARRANTY

Guarantee that Fire Extinguishers are free of defects in materials, fabrication, finish, and installation and that they will remain so for a period of not less than 6 years after completion.

Submit the manufacturer's warranty with inspection tag.

PART 2 PRODUCTS

Submit fabrication drawings consisting of fabrication and assembly details performed in the factory and product data for the following items: Fire Extinguishers; Accessories, cabinets.

2.1 SYSTEM DESCRIPTION

2.1.1 Types

Submit fire extinguishers certifications showing compliance with local codes and regulations.

Provide fire extinguishers conforming to NFPA 10. Provide quantity and placement in compliance with the applicable sections of NFPA 1, NFPA 101, NFPA 99, NFPA 241, , , , , and 29 CFR 1910.157.

Provide dry chemical type fire extinguishers compliant with UL 299.

2.1.2 Material

Provide corrosion-resistant steel extinguisher shell.

2.1.3 Size

5 pounds extinguishers.

2.1.4 Accessories

Forged brass valve

Fusible plug

Safety release

Antifreeze

Pressure gage

2.2 EQUIPMENT

2.2.1 Cabinets

2.2.1.1 Material

Provide corrosion-resistant steel cabinets.

2.2.1.2 Type

Provide surface type cabinets.

Provide a fire rated cabinet, listed and labeled to comply with ASTM E814 for fire resistance wall rating.

2.2.1.3 Size

Dimension cabinets to accommodate the specified fire extinguishers.

PART 3 EXECUTION

3.1 INSTALLATION

Install Fire Extinguishers where indicated on the drawings. Verify exact locations prior to installation.

Provide extinguishers which are fully charged and ready for operation upon installation. Provide extinguishers complete with Manufacturer's Warranty with Inspection Tag attached.

Install fire extinguishers in locations indicated and in compliance with requirements of authorities having jurisdiction.

Comply with the manufacturer's recommendations for all installations.

3.2 PROTECTION

3.2.1 Repairing

Remove and replace damaged and unacceptable portions of completed work with new work at no additional cost to the Government.

Submit replacement parts list indicating specified items replacement part, replacement cost, and name, address and contact for replacement parts distributor.

3.2.2 Cleaning

Clean all surfaces of the work, and adjacent surfaces which are soiled as a result of the work. Remove from the site all construction equipment, tools, surplus materials and rubbish resulting from the work.

-- End of Section --

This page was intentionally left blank for duplex printing.

SECTION TABLE OF CONTENTS

DIVISION 12 - FURNISHINGS

SECTION 12 21 00

WINDOW BLINDS

PART 1 GENERAL

1.1 SUMMARY
1.2 REFERENCES
1.3 SUBMITTALS
1.4 DELIVERY, STORAGE, AND HANDLING
1.5 WARRANTY

PART 2 PRODUCTS

2.1 WINDOW BLINDS
2.1.1 Horizontal Blinds
2.1.1.1 Head Channel and Slats
2.1.1.2 Controls
2.1.1.3 Intermediate Brackets
2.1.1.4 Bottom Rail
2.1.1.5 Braided Ladders
2.1.1.6 Hold-Down Brackets
2.1.2 Light Control and Privacy Blinds
2.2 COLOR

PART 3 EXECUTION

3.1 EXAMINATION
3.2 WINDOW TREATMENT PLACEMENT SCHEDULE
3.3 INSTALLATION
3.4 CLEAN-UP

-- End of Section Table of Contents --

SECTION 12 21 00

WINDOW BLINDS

PART 1 GENERAL

1.1 SUMMARY

Provide window treatment, conforming to NFPA 701, complete with necessary brackets, fittings, and hardware. Provide each window treatment type as a complete unit in accordance with paragraph WINDOW TREATMENT PLACEMENT SCHEDULE. Mount and operate equipment in accordance with manufacturer's instructions. Completely cover windows to receive a treatment.

1.2 REFERENCES

The publications listed below form a part of this specification to the extent referenced. The publications are referred to in the text by basic designation only.

NATIONAL FIRE PROTECTION ASSOCIATION (NFPA)

NFPA 701	(2023; ERTA 1 2023) Standard Methods of Fire Tests for Flame Propagation of Textiles and Films

1.3 SUBMITTALS

Government approval is required for submittals with a "G" or "S" classification. Submittals not having a "G" or "S" classification are for information only. When used, a code following the "G" classification identifies the office that will review the submittal for the Government. Submit the following in accordance with Section 01 33 00 SUBMITTAL PROCEDURES

SD-02 Shop Drawings

Installation

SD-03 Product Data

Window Blinds; G, DO

SD-04 Samples

Window Blinds; G, DO

SD-06 Test Reports

Window Blinds

SD-08 Manufacturer's Instructions

Window Blinds; G

SD-10 Operation and Maintenance Data

Window Blinds; G

1.4 DELIVERY, STORAGE, AND HANDLING

Deliver components to the jobsite in the manufacturer's original packaging with the brand or company name, item identification, and project reference clearly marked. Store components in a dry location that is adequately ventilated and free from dust, water, or other contaminants and has easy access for inspection and handling. Store materials flat in a clean dry area with temperature maintained above 50 degrees F. Do not open containers until needed for installation unless verification inspection is required.

1.5 WARRANTY

Provide manufacturer's standard performance guarantees or warranties that extend beyond a 1 year period.

PART 2 PRODUCTS

2.1 WINDOW BLINDS

Provide each blind, including hardware, accessory items, mounting brackets and fastenings, as a complete unit produced by one manufacturer. Unless otherwise indicated, all parts will be the same color and will match the color of the blind slat. Treat steel features for corrosion resistance. Submit product data and samples of each type and color of window treatment. Provide slat samples 6 inch in length for each color.

2.1.1 Horizontal Blinds

Provide horizontal blinds with 1 inch slats. Blind units must be capable of nominally 180 degree partial tilting operation and full-height raising. Blinds must be inside mount. Tapes for 1 inch slats must be braided polyester or nylon.

2.1.1.1 Head Channel and Slats

Provide head channel made of aluminum with corrosion-resistant finish nominal 0.024 inch for 1 inch slats. Provide slats of aluminum, not less than 0.006 inch thick, and of sufficient strength to prevent sag or bow in the finished blind. Provide a sufficient amount of slats to assure proper control, uniform spacing, and adequate overlap. Enclose all hardware in the headrail.

2.1.1.2 Controls

A transparent tilting wand will be provided to tilt the slats, it will hang vertically by its own weight, and will swivel for easy operation. Provide a tilter control of enclosed construction. Provide moving parts and mechanical drive made of compatible materials which do not require lubrication during normal expected life. The tilter will tilt the slats to any desired angle and hold them at that angle so that any vibration or movement of ladders and slats will not drive the tilter and change the angle of slats. Include a mechanism to prevent over tightening. Provide a wand of sufficient length to reach to within 5 feet of the floor.

2.1.1.3 Intermediate Brackets

Provide intermediate brackets for installation, as recommended by the manufacturer, of blinds over 48 inch wide.

2.1.1.4 Bottom Rail

Provide bottom rail made of corrosion-resistant steel with factory applied finish. Provide closed oval shaped bottom rail with double-lock seam for maximum strength. Bottom rail and end caps to match slats in color.

2.1.1.5 Braided Ladders

Provide braided ladders of 100 percent polyester yarn, color to match the slat color. Space ladders 15.2 slats per foot of drop in order to provide a uniform overlap of the slats in a closed position.

2.1.1.6 Hold-Down Brackets

Provide universal type hold-down brackets for sill or jamb mount where indicated on placement list.

2.1.2 Light Control and Privacy Blinds

In addition to requirements for horizontal blinds, provide each unit with a feature that offers hidden slat holes for maximum light control and privacy.

2.2 COLOR

Provide color, pattern and texture selected from manufacturer's standard colors. Color listed is not intended to limit the selection of equal colors from other manufacturers.

PART 3 EXECUTION

3.1 EXAMINATION

After becoming familiar with details of the work, verify all dimensions in the field, and advise the Contracting Officer of any discrepancy before performing the work.

3.2 WINDOW TREATMENT PLACEMENT SCHEDULE

All exterior windows within renovation scope.

3.3 INSTALLATION

Do not install building construction materials that show visual evidence of biological growth.

Submit drawings showing fabrication and Installation details. Show layout and locations of track, direction of draw, mounting heights, and details. Provide Manufacturer's Instructions and Operation and Maintenance Data. Perform installation of window blinds in accordance with the approved detail drawings and manufacturer's installation instructions. Install units level, plumb, secure, and at proper height and location relative to window units. Provide and install supplementary or miscellaneous items in total, including clips, brackets, or anchorages incidental to or necessary

for a sound, secure, and complete installation. Do not start installation until completion of room painting and finishing operations.

3.4 CLEAN-UP

Upon completion of the installation, inspect window treatments for soiling, damage or blemishes; and adjust them for form and appearance and proper operating condition. Repair or replace damaged units as directed by the Contracting Officer. Isolate metal parts from direct contact with concrete, mortar, or dissimilar metals. Ensure blinds installed in recessed pockets can be removable without disturbing the pocket. The entire blind, when retracted, must be contained behind the pocket. For blinds installed outside the jambs and mullions, overlap each jamb and mullion 0.75 inch or more when the jamb and mullion sizes permit. Include all hardware, brackets, anchors, fasteners, and accessories necessary for a complete, finished installation.

-- End of Section --

This page was intentionally left blank for duplex printing.

SECTION TABLE OF CONTENTS

DIVISION 12 - FURNISHINGS

SECTION 12 50 00.13 10

FURNITURE AND FURNITURE INSTALLATION

PART 1 GENERAL

1.1 REFERENCES
1.2 SUBMITTALS
1.3 SERVICES
1.4 FURNITURE PURCHASE
1.5 ALTERNATE DESIGN
1.5.1 Desk and Workstation Size and Configuration
1.5.2 Filing and Storage Size and Configuration
1.5.3 Furniture Requirements
1.5.4 Layout
1.6 AUTHORIZED DEALER AND CERTIFIED FURNITURE INSTALLERS
1.7 DELIVERY, STORAGE AND HANDLING
1.7.1 Delivery
1.7.2 Furniture Inspection
1.7.3 Furniture Staging Area
1.8 WARRANTY

PART 2 PRODUCTS

2.1 PRODUCT SUSTAINABILITY CRITERIA
2.1.1 Energy Efficient Equipment
2.1.2 Reduced VOC's for Furniture
2.1.3 Recycled Content of Furniture
2.1.4 Bio-Based Content of Furniture
2.2 FURNITURE REQUIREMENTS
2.2.1 EXISTING FURNITURE (GOVERNMENT FURNISHED/CONTRACTOR INSTALLED-GF/CI)
2.2.1.1 Existing Furniture to be Reused
2.2.1.2 Existing Furniture that is Not Reused
2.2.2 Construction
2.2.3 Locks and Keying
2.2.4 Fabric and Finish
2.2.4.1 Fabric
2.2.4.2 Finishes
2.3 FURNITURE LAYOUT

PART 3 EXECUTION

3.1 BUILDING EXAMINATION
3.2 BUILDING PROTECTION
3.3 INSTALLATION
3.3.1 Installation Drawings
3.3.2 Furniture Installation Procedures
3.4 CLEANING
3.5 OPERATION AND MAINTENANCE MANUALS

3.5.1 Assembly Manuals
3.5.2 Installation Instructions
3.5.3 Maintenance Manuals
3.5.4 Special Tools
3.5.5 Furniture Drawings
3.5.6 Furniture Listing
3.5.7 Order Form Documentation

-- End of Section Table of Contents --

SECTION 12 50 00.13 10

FURNITURE AND FURNITURE INSTALLATION

PART 1 GENERAL

Purchase and install furniture as identified within this specification. There is new furniture to be procurred and installed by the contractor, existing furniture to be reused, and existing furniture that will not be reused. Existing furniture that is not being reused can be moved to the cold storage building across from the powerhouse. The existing drawing drawers will be moved by the contractor to enable the removal of carpet and abatement of asbestos tile underneath. New flooring and building finishes will be installed by the contractor, and the drawing drawers will be put back in place by the contractor.

The requirements of this specification also apply to systems furniture unless otherwise specified in Section 12 59 00 Systems Furniture.

1.1 REFERENCES

The publications listed below form a part of this specification to the extent referenced. The publications are referred to within the text by the basic designation only.

AMERICAN SOCIETY OF HEATING, REFRIGERATING AND AIR-CONDITIONING ENGINEERS (ASHRAE)

ASHRAE 90.1 - IP	(2019) Energy Standard for Buildings Except Low-Rise Residential Buildings

ASTM INTERNATIONAL (ASTM)

ASTM D4157	(2013; R 2017) Standard Test Method for Abrasion Resistance of Textile Fabrics (Oscillatory Cylinder Method)
ASTM E84	(2023) Standard Test Method for Surface Burning Characteristics of Building Materials
ASTM E1537	(2016) Standard Test Method for Fire Testing of Upholstered Furniture

BIFMA INTERNATIONAL (BIFMA)

ANSI/BIFMA X5.1	(2017) American National Standards For Office Furnishings - General Purpose Office Chairs
ANSI/BIFMA X5.5	(2014) American National Standards For Office Furnishings -Desk Products
ANSI/BIFMA X5.6	(2016) American National Standards For Office Furnishings -Panel Systems

ANSI/BIFMA X5.9	(2012) American National Standards For Office Furnishings - Storage Units

NATIONAL FIRE PROTECTION ASSOCIATION (NFPA)

NFPA 101	(2024) Life Safety Code
NFPA 265	(2023; ERTA 1 2023) Standard Methods of Fire Tests for Evaluating Room Fire Growth Contribution of Textile or Expanded Vinyl Wall Coverings on Full Height Panels and Walls

STATE OF CALIFORNIA BUREAU OF HOUSEHOLD GOODS AND SERVICES (BHGS)

TB 117-2013	(2013) Requirements, Test Procedure and Apparatus for Testing the Smolder Resistance of Materials Used in Upholstered Furniture

U.S. NATIONAL ARCHIVES AND RECORDS ADMINISTRATION (NARA)

36 CFR 1191	Americans with Disabilities Act (ADA) Accessibility Guidelines for Buildings and Facilities; Architectural Barriers Act (ABA) Accessibility Guidelines

UL SOLUTIONS (UL)

UL 723	(2020) UL Standard for Safety Test for Surface Burning Characteristics of Building Materials

1.2 SUBMITTALS

Government approval is required for submittals with a "G" classification. Submittals not having a "G" classification are for information only. When used, a code following the "G" classification identifies the office that will review the submittal for the Government. Submit the following in accordance with Section 01 33 00 SUBMITTAL PROCEDURES:

SD-01 Preconstruction Submittals

Storage Location; G, RO

SD-02 Shop Drawings

Installation Drawings; G, DO

SD-03 Product Data

Product Data; G, DO

Product Style Options; G, DO

SD-04 Samples

Fabric and Finishes; G, DO

SD-07 Certificates

Authorized Dealer

Certified Furniture Installers

Manufacturer's Certification

Warranty

SD-10 Operation and Maintenance Data

Furniture, Data Package 1

SD-11 Closeout Submittals

Reduced VOC's for Furniture

Recycled Content of Furniture

Bio-Based Content of Furniture

1.3 SERVICES

Provide services to include furniture purchase, field measuring, installation drawings, shipping and delivery coordination, receiving, inspection, submitting and processing freight and warranty claims, unpacking, storing, assembly, installation and other related activities or tasks for a complete and functional installation. Reference Section 01 45 00 QUALITY CONTROL for inspection requirements. Develop project timelines and establish shipping, receiving and installation dates that coordinate with the building construction schedule. Hold at a minimum weekly team meetings to brief the project team, include the Contracting Officer. Notify the Government Representative immediately of any scheduling problems, discontinued furniture items including fabrics and finishes, or other conditions which may cause delays, and recommend available substitutes, solutions, and provide updated timeline to coordinate with building construction schedule. Substitutes and solutions must comply with the specification and be approved through the submittal process.

1.4 FURNITURE PURCHASE

Purchase furniture, including checking accuracy of all acknowledgements and schedules from manufacturers and making necessary corrections to insure that the manufacturer has a correct understanding of the order and requirement. Provide furniture from the GSA Schedules and provide GSA pricing. Provide furniture from open market only when an item is not available on the GSA Schedules. See FAR clause 52.251-1 Government Supply Sources. The furniture provided needs to be available on the GSA Schedules to assist the User with future purchases. Furniture is subject to FAR clause 52.236-5 Materials and Workmanship.

1.5 ALTERNATE DESIGN

When a manufacturer's product is unable to provide desk and workstation configurations and filing/storage that conform exactly to the furniture layouts shown in the contract drawings and specifications, alternate designs may be submitted for consideration. Alternate designs must meet

or exceed the following criteria. Alternate designs that are submitted but do not meet these criteria will be rejected.

1.5.1 Desk and Workstation Size and Configuration

The alternate design must provide desks and workstations of the same basic size and configuration shown, with only the sizes of the individual components within the desk and workstation changed to meet the standard product of the manufacturer.

1.5.2 Filing and Storage Size and Configuration

The alternate design must provide filing and storage of the same basic size and configuration shown, with only the size changed to meet the standard product of the manufacturer. The storage capacity must not be reduced.

1.5.3 Furniture Requirements

The furniture provided must comply with the drawings and specifications.

1.5.4 Layout

The storage capacity, number of desks and workstations, number of persons accommodated, width of aisles, and functionality must be maintained. Layout must comply with NFPA 101 and 36 CFR 1191.

1.6 AUTHORIZED DEALER AND CERTIFIED FURNITURE INSTALLERS

When required by the furniture manufacturer, furniture must be installed by an authorized dealer and a certified furniture installation crew must be used on the project. Submit copies of authorized dealer and furniture installation crew.

1.7 DELIVERY, STORAGE AND HANDLING

1.7.1 Delivery

Deliver furniture to the jobsite in manufacturer's original packaging or blanket wrapping. Original packaging must be marked with the manufacturer name, item identification, and project reference clearly marked.

1.7.2 Furniture Inspection

Inspect furniture and provide notification of damage within the time frame required by the shipping company while carrier is still on-site. Complete claims for concealed damage within the time frame required by the shipping company and furniture manufacturer. A claim file must be maintained that documents each claim.

1.7.3 Furniture Staging Area

Coordinate location of the furniture staging area with the Government Representative.

1.8 WARRANTY

Provide manufacturer performance guarantees or warranties for single-shift service and include parts, labor and transportation as follows, unless otherwise noted:

a. Systems Furniture - see Section 12 59 00 Systems Furniture

b. Filing and Storage - 12 year minimum

c. Seating

(1) Seating, unless otherwise noted - 10 year minimum

(2) 24/7 Seating (multiple shift use) - 10 year minimum

(3) Seating Mechanisms and Pneumatic Cylinders - 10 year minimum

d. Miscellaneous

(1) Fabric - 3 year minimum

(2) LED Task Lighting - 5 year minimum

(3) Task Lighting - 3 year minimum

Provide items not listed with a 1 year minimum. When manufacturers standard performance guarantees or warranties exceed the minimum requirements identified, provide the standard performance guarantee or warranty. Submit manufacturer's warranty information for all furniture items.

PART 2 PRODUCTS

2.1 PRODUCT SUSTAINABILITY CRITERIA

For products in this section, where applicable and to extent allowed by performance criteria, provide and document the following:

2.1.1 Energy Efficient Equipment

Coordinate requirement for energy efficient equipment, such as lighting, and provide documentation .

2.1.2 Reduced VOC's for Furniture

Coordinate requirement for reduced VOC requirements for furniture and provide documentation .

2.1.3 Recycled Content of Furniture

Coordinate requirement for recycled content for furniture and provide documentation .

2.1.4 Bio-Based Content of Furniture

Coordinate requirement for biobased content for furniture and provide documentation .

2.2 FURNITURE REQUIREMENTS

Use the drawings and specifications for the furniture requirements. Systems furniture is specified in Section 12 59 00 SYSTEMS FURNITURE. Provide furniture from manufacturer's standard product as shown in the

most current published price list or amendment. Furniture provided must be part of current line as indicated with no intent to discontinue within two years. Provide furniture that is intended for commercial use not residential. Submit product data for all furniture items, to include catalog cuts, brochures, product information, and other necessary literature to indicate compliance with specifications. Provide product data for all items together in a single submittal. When applicable, include GSA schedule information to confirm that items are available on GSA schedule. Submit data for all product style options for selection when options are available. This applies to but is not limited to furniture items that have options such as edge details, hardware options, and grommet colors. Submit manufacturer's certification stating that furniture meets the specifications.

Furniture Technical Requirements:

S1 Desk Chair - Provide ergonomic desk chair with upholstered or mesh seat and back, non-upholstered height adjustable arms and five star base with casters appropriate for flooring. Features to include variable back tilt lock, pneumatic seat height adjustment, seat depth adjustment 16 1/2-18 1/2", seat height minimum range of 4", to include 17"-20", and adjustable lumbar support. Chair must support up to 300 lb. weight capacity. Approximate dimensions include 27"w x 27"d x 38 1/2-42 1/2"h.

S3 Guest Chair - Provide 4-legged guest chair with metal frame, and upholstered back and seat with casters and arms. Approximate dimensions 25 3/4"w x 20"d x 31 1/2" h.

T2 Conference Table, 36"X60" - Provide standard height conference table that is 36"wx60"w with metal base and plastic laminate work surface with ABS-type edgebanding.

W1 Workstation 8'x11' - Provide panel based workstation with metal storage, plastic laminate worksurfaces with ABS-type edgebanding, wire management and grommets where appropriate. Panels to be approximately 78"h with wardrobe storage to be approximately 63"h. When panels are against a wall, do not provide panels below the worksurface. Components included in workstation: 30x60 electric height-adjustable primary worksurface, 24x42 bridge worksurface, and a 24x72 credenza worksurface with 30"w lateral file below the worksurface, overhead storage with undercabinet light, and a 24"w wardrobe with two sections: 1. coat bar and 2. storage cabinet above and file/file pedestal cabinet below. Include slider door, pencil drawer, freestanding LED task light, and dual monitor arm. Supports under worksurfaces shall not interfere with knees.

W2 Workstation 6'x7' - Provide panel based workstation with metal storage, plastic laminate worksurfaces with ABS-type edgebanding, wire management and grommets where appropriate. Panels and wardrobe storage to be approximately 63"h. When panels are against a wall, do not provide panels below the worksurface. Components included in workstation: 24x48 electric height-adjustable primary worksurface, 24x60 return worksurface, 15"w cushion top mobile pedestal, and 24"w wardrobe with two sections: 1. coat bar and 2. storage cabinet above and file/file pedestal cabinet below. Include pencil drawer, freestanding LED task light, and dual monitor arm. Supports under worksurfaces shall not interfere with knees.

W2A Workstation 6'x7' w/ Back Panel - Provide panel based workstation with metal storage, plastic laminate worksurfaces with ABS-type edgebanding, wire management and grommets where appropriate. Panels and wardrobe

storage to be approximately 63"h. When panels are against a wall, do not provide panels below the worksurface. Components included in workstation: 24x48 electric height-adjustable primary worksurface, 24x60 return worksurface, 15"w cushion top mobile pedestal, and 24"w wardrobe with two sections: 1. coat bar and 2. storage cabinet above and file/file pedestal cabinet below. Include pencil drawer, freestanding LED task light, and dual monitor arm. Supports under worksurfaces shall not interfere with knees.

2.2.1 EXISTING FURNITURE (GOVERNMENT FURNISHED/CONTRACTOR INSTALLED-GF/CI)

2.2.1.1 Existing Furniture to be Reused

The existing drawing drawers will be moved by the contractor to a temporary location while the room is under construction. Contractor will move the drawings drawers back into place.

2.2.1.2 Existing Furniture that is Not Reused

Disassemble and relocate any furniture identified as not to be reused to the cold storage area within the building. This includes disconnecting furniture electrical connections at the building source. Coordinate with electrician for safe terminations or removal of disconnected building electric system supply circuits. Protect all items from damage and provide security and weather protection prior to and during relocation.

2.2.2 Construction

a. Provide furniture that complies with the following testing requirements:

(1) ANSI/BIFMA

(a) Office Seating - ANSI/BIFMA X5.1

(b) Desk Products - ANSI/BIFMA X5.5

(c) Panel Systems - ANSI/BIFMA X5.6

(d) Storage - ANSI/BIFMA X5.9

(2) Flammability

(a) Systems furniture and workstation panel components must meet requirements for flame spread and smoke development as specified by NFPA 101 except as follows. Conduct testing in accordance with either ASTM E84 or UL 723 on the entire assembled panel of the worst case (most combustible) combination of fabric and interior construction. In addition, fabric must meet the requirements of NFPA 265. Do not exceed panel flame spread 25 for Class A, and do not exceed panel smoke development 450 for Class A, B, and C.

(b) Upholstered furniture must comply with TB 117-2013 or ASTM E1537.

b. Provide furniture with no rough or sharp edges or exposed connections. Clips, screws, and other construction elements must be concealed wherever possible.

c. Items such as desks, workstations and systems furniture must include all necessary components to be structurally sound and must not be attached to the wall unless specified to be wall mounted in the contract documents.

d. Desks, workstations, storage, and tables must have leveling devices to compensate for uneven floors.

e. The underside of desks, workstations, and tables must be completely and smoothly finished.

f. The backside of freestanding desks, workstations, and storage must be finished.

g. Provide chair casters and glides appropriate for the floor material they are located on, such as carpet and resilient flooring.

2.2.3 Locks and Keying

a. All drawers and doors, including but not limited to overhead storage cabinets, storage towers, supply cabinets, storage cabinets, desk and workstation pedestals, and filing cabinets must be lockable.

b. Key each desk and workstation in an office differently and key locks within each desk and workstation alike.

c. Furniture storage components in private offices must be keyed alike. Key each private office differently.

d. Provide field changeable lock cylinders in desks and workstations. Number keys and lock cylinders for ease of replacement or clearly label locks with a key number, except for those manufacturers who have removable format locks.

e. Drawers within a pedestal must be lockable either by a central lock that controls all pedestals under one work surface or an individual keyed lock in each pedestal.

f. Provide two keys for each workstation when components are keyed alike. Also provide two keys for each miscellaneous item such as filing cabinets, supply cabinets, storage cabinets, and similar type furniture items.

g. Provide three copies of each master key to the Contracting Officer.

2.2.4 Fabric and Finish

Submit samples of all furniture fabric and finishes. Samples must be actual samples, not photographic representations, size must be a minimum of 3 by 3 inches. If necessary, provide larger size samples to clearly represent pattern. Label samples with fabric or finish code, furniture item code and name, manufacturer name, and color information. Fabric samples must also be labeled with fiber content and double rub testing information.

2.2.4.1 Fabric

a. Fabric must be from manufacturer's standard line and graded-in textile manufacturer's fabrics. Do not provide COM fabrics.

b. Provide a mid grade fabric. Example: manufacturer available grades 1 through 4 (even number of grades), provide grade 3; manufacturer available grades A through D (even number of grades), provide grade C; manufacturer available grades A through E (odd number of grades), provide grade C (middle grade).

c. Provide a topical or inherent soil retardant treatment where appropriate.

d. Fabric for seating must comply with a minimum of 100,000 double rubs unless otherwise noted. Perform double rub testing in accordance with the ASTM D4157 Wyzenbeek Method.

e. Pattern:

(1) Provide patterned upholstery fabric to help hide soiling. Pattern is defined as follows:

(a) Solid Color: single color

(b) Small Size Pattern: minimum 1/2 inch

(c) Medium Size Pattern: minimum 2 inch

(d) Large Size Pattern: minimum 5 inch

(2) Provide patterns as follows:

(a) Desk Chairs: Multi-colored texutre appearance or small to medium size pattern

(b) Side or Guest Chairs: small to medium size pattern

2.2.4.2 Finishes

Provide furniture finishes as listed below unless otherwise noted:

a. Finishes must be able to be cleaned with ordinary household cleaning solutions. Wood finishes must be able to be cleaned with damp cloth as directed by the manufacturer.

b. The finish of steel surfaces must be the manufacturer's most durable finish such as factory powder coat or baked enamel.

c. Grommet colors must be compatible and coordinated with desk, workstation, and table finish colors.

d. Finishes must be neutral in color.

e. Plastic laminate worksurfaces and table tops must be neutral in color and must have a pattern to help hide soiling.

2.3 FURNITURE LAYOUT

Provide furniture layout as indicated on the drawing.

PART 3 EXECUTION

3.1 BUILDING EXAMINATION

Become familiar with details of the work, inspect all areas and conditions under which furniture is to be installed, and coordinate scheduling of dedicated elevators and docks. Notify the Contracting Officer in writing of any conditions detrimental to the proper and timely completion of the installation. Work will proceed only when conditions have been corrected.

3.2 BUILDING PROTECTION

Protect building surfaces to prevent soiling and damage during delivery and installation. Any soiling and damage that occurs to the building during the installation of furniture must be cleaned and repaired, or replaced to its original condition and must be approved by the Contracting Officer.

3.3 INSTALLATION

3.3.1 Installation Drawings

Installation drawings must include furniture layout, critical dimensions and locations of electrical and communications. Reflect field verified conditions in furniture layouts. Drawings must be at 1/4 inch = 1 foot scale, unless otherwise specified. Provide typical plans and isometrics/elevations of desks and workstations at a scale of 1/2 inch = 1 foot. When applicable, provide desk and workstation electrical and communications locations. When applicable include controlled-circuit identification for each furniture receptacle and coordinate with the building electrical system circuits in accordance with ASHRAE 90.1 - IP. Critical dimensions include, but are not limited to clearances and aisle widths. Drawings must include layout for furniture systems workstations for coordination purposes. Label furniture with furniture item code identified in this specification. Submit grommet, power and communication units, and wire management locations.

3.3.2 Furniture Installation Procedures

Complete installation in accordance with manufacturer's installation instructions, assembly manuals, warranty requirements and approved installation drawings. Also comply with the following requirements:

a. Use material handling equipment with rubber wheels.

b. Furniture and components must be installed level, plumb, square, and with proper alignment with adjoining furniture.

c. Match keys to locks and check locking mechanisms.

d. Check drawers, doors, lighting, and other operable items and mechanisms for proper operation.

e. Remove all protective wrapping tape, residue, and related type items.

f. Securely interconnect furniture components where required.

g. Securely attach and anchor furniture components to the building when required.

h. Securely anchor furniture such as shelving and storage units to the building when required by the manufacturer.

i. All items with an electrical plug, such as but not limited to task lighting and tables with electrical power, must be fully operational.

j. All hardwired furniture, such as but not limited to furniture systems, must be fully operational. Verify that voltage is present in electrical outlets. Verify controlled-circuit outlets are properly configured in accordance with the installation drawings.

k. Furniture must not block access panels along the baseboard. See drawings for location of access panels. Report conflicts to Contracting Officer to discuss resolution.

l. Upon completion of installation, all furniture must be completely cleaned, finished, leveled, aligned, operational and functional.

3.4 CLEANING

Remove all packing materials and other trash from the jobsite. Upon completion of installation, all products must be clean, including inside all drawers and doors, and the area must be free of debris and left in a clean and neat condition. Any defects in or damage to furniture must be repaired or replaced and approved by the Contracting Officer. Damaged products that cannot be satisfactorily repaired must be replaced. Correct any problems with assembly and installation. Prior to any furniture repair, replacement, and/or assembly and installation corrections, protect the building surfaces.

3.5 OPERATION AND MAINTENANCE MANUALS

Submit the Furniture, Data Package 1 in accordance with Section 01 78 23 OPERATION AND MAINTENANCE DATA and include the following:

3.5.1 Assembly Manuals

Describe assembly and re-configuration procedures. Provide three sets of installation video tapes if available.

3.5.2 Installation Instructions

Provide a copy of the instructions used to install the furniture. Also describe any special procedures or helpful hints learned during the installation process.

3.5.3 Maintenance Manuals

Describe proper cleaning and minor repair procedures, include cleaning instructions for fabrics.

3.5.4 Special Tools

Provide three sets of special tools necessary for assembly and disassembly of furniture and components from each manufacturer. Mark tool(s) with manufacturer and product information.

3.5.5 Furniture Drawings

Provide hard copy and electronic, showing installed furniture layout. Include all modifications. Coordinate type (such as but not limited to Microstation, AutoCad and Revit) and version required with User. Include critical dimensions, and locations of building and furniture electrical and communications. Provide drawings at 1/4 inch = 1 foot scale, unless otherwise specified. Provide typical plans and isometrics/elevations of workstations at a scale of 1/2 inch = 1 foot. Code all furniture with furniture item code identified in this specification.

3.5.6 Furniture Listing

Provide complete listing, hard copy and electronic, of furniture provided. Include all modifications. Coordinate type of electronic file required with User (such as but not limited to Word and Excel). Listing must include furniture item code and name used in FF&E Package, part/model numbers, fabrics and finishes for all components furnished. Organize listing by item name and code and provide building totals.

3.5.7 Order Form Documentation

Provide Order Form Documentation with Purchase Order number and project name and location to allow the User to follow up on warranty issues and help with future purchases.

-- End of Section --

SECTION TABLE OF CONTENTS

DIVISION 12 - FURNISHINGS

SECTION 12 59 00

SYSTEMS FURNITURE

PART 1 GENERAL

1.1 REFERENCES
1.2 SUBMITTALS
1.3 CERTIFICATIONS
1.3.1 Indoor Air Quality Certifications
1.3.1.1 Office Furniture Systems and Seating
1.4 QUALITY ASSURANCE
1.4.1 General Safety
1.4.2 Fire Safety
1.4.3 Electrical System
1.4.4 Detail Drawings
1.5 DELIVERY, STORAGE, AND HANDLING
1.6 WARRANTY

PART 2 PRODUCTS

2.1 MATERIALS
2.2 SYSTEM DESCRIPTION
2.2.1 Workstations
2.2.2 Samples
2.2.3 Alternate Design
2.2.3.1 Component Requirements
2.2.4 Performance Requirements
2.2.4.1 Selected Components
2.2.5 Pattern and Color
2.3 SYSTEMS FURNITURE
2.3.1 Panel System Components
2.3.2 Panel Finishes
2.3.3 Raceways
2.3.4 Leveling Glides
2.3.5 Connection System
2.3.6 Sliding Doors
2.4 WORK SURFACES
2.4.1 Construction
2.4.2 Finishes
2.5 PEDESTALS
2.5.1 Construction
2.5.2 Finishes
2.5.3 Drawer Requirements
2.6 STORAGE
2.6.1 Overhead Cabinet Construction
2.6.2 Lateral File and Book Case Construction
2.6.3 Personal Storage Tower Construction
2.6.4 Finish
2.7 ACCESSORIES

2.7.1 Keyboard Tray
2.7.2 Tackboards
2.7.3 Monitor Arm
2.8 MISCELLANEOUS HARDWARE
2.9 LOCKS AND KEYING
2.10 POWER AND COMMUNICATIONS
2.10.1 Task Lighting
2.10.1.1 Luminaire Configuration
2.10.1.2 Wiring
2.10.1.3 Control Device

PART 3 EXECUTION

3.1 INSTALLATION
3.2 CLEANING

-- End of Section Table of Contents --

SECTION 12 59 00

SYSTEMS FURNITURE

PART 1 GENERAL

1.1 REFERENCES

The publications listed below form a part of this specification to the extent referenced. The publications are referred to within the text by the basic designation only.

ASTM INTERNATIONAL (ASTM)

ASTM E84	(2023) Standard Test Method for Surface Burning Characteristics of Building Materials

BIFMA INTERNATIONAL (BIFMA)

ANSI/BIFMA M7.1	(2011; R 2016) Test Method for Determining VOC Emissions from Office Furniture Systems, Components and Seating
ANSI/BIFMA X5.5	(2014) American National Standards For Office Furnishings -Desk Products
ANSI/BIFMA X5.6	(2016) American National Standards For Office Furnishings -Panel Systems

NATIONAL FIRE PROTECTION ASSOCIATION (NFPA)

NFPA 70	(2023) National Electrical Code
NFPA 101	(2024) Life Safety Code
NFPA 265	(2023; ERTA 1 2023) Standard Methods of Fire Tests for Evaluating Room Fire Growth Contribution of Textile or Expanded Vinyl Wall Coverings on Full Height Panels and Walls

SCIENTIFIC CERTIFICATION SYSTEMS (SCS)

SCS	SCS Global Services (SCS) Indoor Advantage

U.S. DEPARTMENT OF ENERGY (DOE)

Energy Star	(1992; R 2006) Energy Star Energy Efficiency Labeling System (FEMP)

U.S. NATIONAL ARCHIVES AND RECORDS ADMINISTRATION (NARA)

36 CFR 1191	Americans with Disabilities Act (ADA) Accessibility Guidelines for Buildings and Facilities; Architectural Barriers Act

(ABA) Accessibility Guidelines

UL SOLUTIONS (UL)

UL 723	(2020) UL Standard for Safety Test for Surface Burning Characteristics of Building Materials
UL 1286	(2022; Reprint Mar 2024) UL Standard for Safety Office Furnishings
UL 2818	(2022) GREENGUARD Certification Program For Chemical Emissions For Building Materials, Finishes And Furnishings

1.2 SUBMITTALS

Government approval is required for submittals with a "G" or "S" classification. Submittals not having a "G" classification are for information only. When used, a code following the "G" classification identifies the office that will review the submittal for the Government. Submit the following in accordance with Section 01 33 00 SUBMITTAL PROCEDURES:

SD-02 Shop Drawings

Detail Drawings; G, DO

SD-03 Product Data

Warranty

Workstations

Recycled Content for system furniture components

Energy Star Label for Task Lighting

SD-04 Samples

Workstations; G, DO

Samples

SD-06 Test Reports

Selected Components

Fire Safety

SD-07 Certificates

Workstations

SD-10 Operation and Maintenance Data

Assembly Manuals

Maintenance Manuals

Cleaning

Installation

1.3 CERTIFICATIONS

1.3.1 Indoor Air Quality Certifications

1.3.1.1 Office Furniture Systems and Seating

Provide products certified to meet indoor air quality requirements by UL 2818 (Greenguard) Gold, SCS Global Services Indoor Advantage Gold, ANSI/BIFMA M7.1 Certification or provide certification by other third-party program that products meet the requirements of this Section. Provide current product certification documentation from certification body. When product does not have certification, provide validation that product meets the indoor air quality product requirements cited herein.

1.4 QUALITY ASSURANCE

1.4.1 General Safety

Provide workstation products free of rough or sharp edges. Provide panel supported components with a positive, integral locking device which secures components without the use of additional screws or clamps to prevent the components from being accidentally pulled or knocked off the panels.

1.4.2 Fire Safety

Components must meet requirements for flame spread and smoke development as specified by NFPA 101 except as follows. Conduct testing in accordance with either ASTM E84 or UL 723 on the entire assembled panel of the worst case (most combustible) combination of fabric and interior construction. In addition, fabric must meet the requirements of NFPA 265. Do not exceed 25 for Class A for panel flame spread and 450 for Class A, B and C panel smoke development.

1.4.3 Electrical System

Task lights are required to be UL listed and installation of task lighting must meet the requirements of NFPA 70.

1.4.4 Detail Drawings

Provide drawing requirements, which are the furniture manufacturer's responsibility, as a single submittal. Provide electronic drawings to the user for future re-configuration. Include in the electronic drawings all modifications made during installation. As a minimum, submit the following:

a. Overall reference drawings: Drawings showing workstation locations and overall plan view within each floor in a scale of 1/8 inch = 1 foot. Layouts must reflect field verified conditions and clearly illustrate the overall space planning concept and intent.

b. Installation drawings: Drawings showing workstations, panels, components, and plan view within each floor. Identify workstations by

workstation type; submit drawings showing the proposed workstation installation at a scale of 1/4 inch = 1 foot, unless otherwise specified. Installation drawings must reflect field verified conditions.

c. Workstation elevations: Dimensioned workstation elevations showing each type of workstation with panel frame configurations and all components identified with manufacturer's catalog numbers. Draw elevations at 1/2 inch = 1 foot scale.

d. Panel drawings: Panel drawings showing locations and critical dimensions from finished face of walls, columns, panels, including clearances and aisle widths. Key assemblies to a legend which includes width, height, configuration and composition of frame covers finishes and fabrics (if different selections exist within a project), power or nonpower, connectors and wall mount hardware. Coordinate panel placement with location of electrical, voice/date LAN, mechanical and fire protection fixtures. Drawings must reflect field verified conditions.

1.5 DELIVERY, STORAGE, AND HANDLING

Deliver components to the jobsite in the manufacturer's original packaging with the brand, item identification, and project reference clearly marked. Remove furniture from packaging and store in an unoccupied, dry location that is ventilated. Provide storsge that is free from dirt and dust, water, and other contaminants, and that permits easy access for inspection and handling.

1.6 WARRANTY

Warrant the systems furniture for a minimum period of lifetime with the following exceptions: fabrics and other covering materials, and paper handling products for 3 years and LED drivers/power supplies for 5 years. Warranties must be signed by the authorized representative of the manufacturer. Present warranties, accompanied by document authenticating the signer as an authorized representative of the guarantor, to the Contracting Officer upon the completion of the project. Guarantee that the workstation products and installation are free from any defects in material and workmanship from the date of delivery. Submit two copies of the warranty.

PART 2 PRODUCTS

2.1 MATERIALS

Provide System Furniture Components with a minimum of 55 percent recycled content. Provide data identifying percentage of recycled content for system furniture components.

Provide certification of indoor air quality for Office Furniture Systems and Seating.

2.2 SYSTEM DESCRIPTION

2.2.1 Workstations

This specification establishes the minimum requirements for the acquisition and installation of a complete and usable system of

workstations composed of panels, freestanding work surfaces or base units, supporting components, and accessories. Provide workstation requirements and configurations in accordance with the furniture layout and typical workstation types shown in drawings, specification 12 50 00.13 10, and specified herein. Provide components and hardware from a single manufacturer that are standard products as shown in the most recent published price lists or amendments. Proposed product must be part of the manufacturer's current line with no intent to discontinue within two years. Submit complete listing of part/model numbers for all components to be provided, including names and codes of components referenced on updated drawings. Provide electrical components from a single manufacturer to the extent practicable (different types of components may be of different manufacturers, but all units of a given component must be from a single source). Conformance with NFPA 70, UL 1286, NFPA 101, and 36 CFR 1191 is required. Coordinate the work of this section with that to be performed under other sections. This specification may include items which are not manufactured by the furniture manufacturer; provide any such items under this section. Submit two complete sets of certificates attesting that the proposed workstation meets specified requirements. Date the certificate after the award of the contract, include the name of the project, and list specific requirements being certified.

2.2.2 Samples

Submit samples as required to obtain final approval. The Government reserves the right to reject any finish samples that do not satisfy the technical or color requirements. Work can not proceed without sample approval in writing from the Contracting Officer. Submit four sets of the finish samples listed below:

a. Panel, tackboard and overhead door fabric. Minimum 6 by 6 inches with label designating the manufacturer, pattern, color, fiber content, fabric width, fabric weight, fire rating, and use (panel and/or tackboard).

b. Workstation component finishes. Minimum 2-1/2 by 3 inches with label designating the manufacturer, material composition, thickness, color, and finish.

c. Personal Task lights (Not overhead task lights).

d. Panel glazing. Glazing samples with label designating the material and safety ratings.

2.2.3 Alternate Design

Manufacturers who are unable to provide workstations that conform exactly to the furniture layouts and typical workstation types shown in the contract drawings, may submit alternate designs for consideration by the Contracting Officer. Alternate designs must meet or exceed the following criteria. Alternate designs that are submitted but do not meet these criteria will be rejected. In the alternate design provide workstations and components of the same basic size and configuration shown, with only the sizes of the individual components within the workstation changed to meet the standard product of the manufacturer or site conditions.

2.2.3.1 Component Requirements

Provide the types of components or elements as specified in 12 50 00.13 10

and PART 2 PRODUCTS of this specification. Do not reduce the storage capacity, number of workstations accommodated, width of aisles, or workstation configuration.

2.2.4 Performance Requirements

Panels, frames and frame covers, work surfaces, pedestals, shelf units, overhead door cabinets, lateral files, locks, accessories, and miscellaneous hardware must meet testing as specified. ISO 9001 certified manufacturers may perform in-house testing. Manufacturers not ISO 9001 qualified will be required to produce testing by an independent testing laboratory. Component specific requirements are listed in appropriate paragraphs.

2.2.4.1 Selected Components

Workstation conformance to ANSI/BIFMA X5.5 and ANSI/BIFMA X5.6 is required with the following exceptions: Panels, or panel supported components conformance to ANSI/BIFMA X5.6 is required. Representative items will be selected for testing based on worst case situations (i.e., the deepest and widest work surface or shelf). Perform the keyboard drawer or shelf test applying a 50 lb load to the center of the keyboard shelf for a period of 5 minutes. Any loosening of attachments or damage to the operation of the drawer or shelf will be cause for rejection.

2.2.5 Pattern and Color

Provide pattern and color of finishes and fabrics for panel systems, components, and trim.

2.3 SYSTEMS FURNITURE

2.3.1 Panel System Components

Supply aaccessories and appurtenances for a completely finished panel assembly with the system. Provide a system capable of structurally supporting cantilevered work surfaces, shelves, files, overhead cabinets, and other components in the configurations shown on the drawings plus more than one fully loaded component per panel per side. Provide panels that aretackable. Provide capability for worksurfaces to attach to the panels in 1 - 2 inch increments. Provide a panel system that is available in a variety of nominal widths and heights as designated on the drawings. Measure heights from the finished floor to the top of the panel. Supply powered and nonpowered panels that are compatible in height. Coordinate panel heights with the HVAC and electrical designs. Submit three sets of Assembly Manuals describing assembly and reconfiguration procedures.

2.3.2 Panel Finishes

Provide panels in the following options: tackable fabric. Exposed panel trim to have a factory baked enamel or epoxy powder finish. Do not provide filler trim. Provide each fabric-faced panel with a seamless width of fabric stretched over the entire face of the panel. The fabric color throughout the installation must be consistent. Curved panels may use adhesives on curved sections. Attach the fabric securely and continuously along the entire perimeter of the panel and allow for easy removal and replacement in the field (with the exception of curved panels).

2.3.3 Raceways

Provide raceways and covers as an integral part of the panel whether powered or nonpowered. Magnet held base covers will not be accepted.

2.3.4 Leveling Glides

Provide precise alignment of adjacent panels and include leveling glides to compensate for uneven floors. Provide quantity and location of leveling glides as recommended by the manufacturer. A minimum 3/4 inch adjustment range is required.

2.3.5 Connection System

Provide connectors which accommodate a variety of configurations as indicated on the drawings to include: a straight line connection of 2 panels (180 degrees), corner connection of 2 panels (90 degrees) and T connection of 3 panels (90 degrees). Provide tight connections with continuous visual and acoustical seals. Plastic, painted metal, fabric or wood finish connections are required to match system. Provide connector system that allows removal of a single panel within a typical workstation configuration, without requiring disassembly of the workstation or removal of adjacent panels. Provide for connection of similar or dissimilar heights to include trim pieces to finish the exposed edge. Right angle (90 degree) connections between panels must not interfere with the capability to hang work surfaces and other components on any adjacent panel. Filler posts must be level with the top rail.

2.3.6 Sliding Doors

Attach sliding or rolling doors to the panel as shown on the drawings. Provide doors that the direction in which the door slides can be changed in the field. Supply translucent door in same width or wider than the opening to be covered. Provide door pulls for each side of door. Door frame to match the panel frame color.

2.4 WORK SURFACES

2.4.1 Construction

Construct work surfaces to prevent warpage. Fully support work surfaces from the panels or support jointly by the panels and supplemental legs, pedestals, or furniture end panels. Use supplemental end supports only under work surfaces when the work station configuration does not permit full support by the panels. Use metal support brackets to support work surfaces from the panels, provide metal-to-metal fitting to the vertical uprights of the panels, vertically adjustable, to lock the work surfaces in place without panel modifications. Abutting work surfaces must line up closely and be at equal heights when used in side-by-side configurations in order to provide a continuous and level work surface. Provide pre-drilled holes to accommodate storage components, pedestals and additional supports in work surfaces, or drill holes at the job site to accommodate these items. Provide work surfaces in sizes and configurations shown on the drawings. Provide work surfaces in nominal depths of 24 inches plus or minus 2 inches, nominal lengths from 24 to 72 inches, and a nominal thickness from 1 to 1-3/4 inches. Provide height adjustable
work surfaces from 25 to 52 inches above the finished floor with an electrical control.

2.4.2 Finishes

Provide work surfaces with a finished top surface of high pressure plastic laminate and a smoothly finished underside. The work surface must not be damaged by ordinary household solvents, acids, alcohols, or salt solutions. Provide metal support brackets that match the color and finish of trim. Provide ABS edges.

2.5 PEDESTALS

Provide drawer configurations and pedestal height as shown on the drawings. Provide the deepest possible pedestal for each work surface size specified.

2.5.1 Construction

Provide pedestals and drawers of steel construction. Securely attach drawer faces to the drawer front.

2.5.2 Finishes

Provide a factory baked enamel finish or powder coated for steel surfaces. Provide steel drawer fronts.

2.5.3 Drawer Requirements

Pedestals must be field interchangeable from left to right, and right to left, and must retain the pedestal locking system capability. Design pedestals to protect wires from being damaged by drawer operation. Provide pedestals that are support work surfaces or free standing. Drawers must stay securely closed when in the closed position and provide each drawer with a safety catch to prevent accidental removal when fully open. File drawers to be provided with full extension ball bearing drawer slides or rack and pinion suspension. File drawers to be provided with hanging folder frames or rails and capable of hanging side-to-side or front-to-back.
Provide box drawers with pencil trays. Provide center pencil drawer and mount under the work surface.

2.6 STORAGE

Provide storage units in the sizes and configurations shown on the drawings. Provide task lights under overhead cabinets. Depth to accommodate a standard three ring binder

2.6.1 Overhead Cabinet Construction

Provide metal construction overhead cabinets. Provide doors with a suspension system. Provide overhead cabinet door that retracts over the top of the cabinet.

2.6.2 Lateral File and Book Case Construction

Provide units and file fronts, top and end panels of steel construction. File drawers to be provided with full extension ball bearing drawer slides or rack and pinion suspension. File drawers to be provided with hanging folder frames or rails and capable of hanging side-to-side or front-to-back.

2.6.3 Personal Storage Tower Construction

Provide personal storage tower and components of steel construction. Height of the unit to be the same height as the surrounding panels. The personal storage tower will include one full height wardrobe unit with coat rod, two file drawers, bookcase with two adjustable shelves, and hinged lockable doors.

2.6.4 Finish

Provide a factory baked enamel or epoxy powder coat finish for shelves, dividers and top dust cover. Provide either a factory baked enamel, epoxy powder coat or laminate finish for shelf supporting end panels. Shelf bottom is required to match end panel color. Provide metal doors with an exterior finish of factory baked enamel and an interior finish of factory baked enamel or epoxy powder coat. Provide a factory baked enamel finish or epoxy powder coat on metal drawers.

2.7 ACCESSORIES

2.7.1 Keyboard Tray

Provide work surfaces that are capable of accepting an articulating keyboard in locations as shown on the drawings. The keyboard tray must be capable of fully recessing under the work surface and extending to give the user full access to the keyboard. Provide height adjustability, 180-degree swing side travel rotation and negative tilting capability. Include a wrist support and a mouse pad at the same level as the keyboard tray to accommodate either right or left-handed users.

2.7.2 Tackboards

Fabric must be factory installed.

2.7.3 Monitor Arm

Provide monitor arm that allows 360 degree monitor rotation for portrait and landscape viewing, and 60 degree range of lateral and vertical monitor tilt for additional viewing adjustability. Provide monitor arm that supports monitors weighing 7 to 19 lbs. Provide dual monitor arm for 2 screens. Mount monitor arm on work surface.

2.8 MISCELLANEOUS HARDWARE

Provide brackets, supports, hangers, clips, panel supported legs, connectors, adjustable feet, cover plates, stabilizers, and other miscellaneous hardware that contribute to a complete and operable furniture system.

2.9 LOCKS AND KEYING

Provide overhead cabinets, personal storage towers, pedestals and lateral files with keyed locks, unless otherwise noted. Provide field changeable lock cylinders with a minimum of 100 different key options. Key each workstation individually, and key locks alike within a workstation. Provide lockable drawers within a pedestal either by a central lock that controls all pedestals under one work surface or an individual keyed lock in each pedestal. Provide two keys for each lock or two keys per workstation when keyed alike, and provide three master keys per area as

indicated. Number keys and lock cylinders for ease of replacement. Clearly label locks with a key number, except for those manufacturers who have removable format locks.

2.10 POWER AND COMMUNICATIONS

2.10.1 Task Lighting

Provide task lights with light emitting diode (LED) technology to include a built-in reflector and shielding device that prevents direct glare into an occupant's eyes when they are in a typical working position. Provide adjustable arm task lights with adjustable, fully articulated and balanced head and arms, minimum 10 inch adjustable arm range, LED lamp technology, and cord set for plug in that is freestanding. Provide task light size and placement on the contract documents. It is required that lights be a standard component of the manufacturer's workstation products, and the ends of the task light length can not extend beyond the edges of the overhead cabinet. Provide UL approved luminaires. Provide task lighting that is Energy Star labeled. Provide data identifying Energy Star label for task lighting.

2.10.1.1 Luminaire Configuration

Provide luminaires and lamps as specified in Section 26 51 00 INTERIOR LIGHTING and modified herein. For undershelf or undercabinet lighting, provide luminaires that are light emitting diode (LED) type and have prismatic lenses, baffles, or other shielding device configured to minimize glare by shielding the lamp from view of the seated user. For adjustable arm task lights, provide luminaires that are LED type and have prismatic lenses, baffles, or other shielding device configured to minimize glare by shielfing the lamp from view of the seated user. Provide task lights for each workstation with a minimum of 75 footcandles of light (horizontally measured) without veiling reflections, on the work surface directly below and a maximum of 20 inches from the luminaire. Easily removable diffusers, grilles, or other coverings are required to allow for cleaning and relamping. For LED-type task lighting, power consumption exceeding 8 watts per foot is prohibited. Match Correlated Color Temperature (CCT) of task lighting to the CCT of the ambient room lighting. Provide an easily accessible on-off switch and one ballast or driver per luminaire. A variable intensity control is acceptable if the low setting is equivalent to "off" with zero energy consumption. Multiple level switching is also acceptable. For LED type technology, ganged luminaires or shared drivers are permitted for up to 4 continuous feet in length. A single driver designed for use with an individual LED housing of greater than 4 feet in length is allowed.

2.10.1.2 Wiring

Provide each luminaire with a 6 foot minimum, factory installed, heavy duty electrical cordset with a grounded plug for luminaries that are mounted on the same wall as the receptacle. Provide luminaires mounted on non-powered wall with a 9 foot minimum, factory installed heavy duty electrical cordset with a grounded plug. Direct or hard wire connections are not acceptable. Unless otherwise indicated, conceal cord. Built-in cord concealment is required within panels or utilize field installed, manufacturer approved accessories. Cords may be extended through dedicated channels located at any point within panels or may be placed in vertical slots or in the space between panels if held in place by retainers and concealed by a cover plate. Vertical wire managers are

required to be prefinished and cut to size and to extend from the task light level down to the top of the work surface below the task light. Attach each manager to a panel vertical edge or connector strip without damage to the surfaces.

2.10.1.3 Control Device

Provide occupancy sensors with "manual ON", "automatic OFF" controls for luminaire control.

PART 3 EXECUTION

3.1 INSTALLATION

Install the workstations using certified installers in accordance with manufacturer's recommended installation instructions. A licensed electrician is required to hardwire the workstations. Install workstation components level, plumb, square, and with proper alignment with adjoining furniture. Securely interconnect and attach components to the building where required. Provide three sets of special tools and equipment necessary for the relocation of panels and other components. Verify that equipment is properly installed, connected, and adjusted.

3.2 CLEANING

Provide cleanup as specified in Section 01 78 00 CLOSEOUT SUBMITTALS. Upon completion of installation, clean and polish all products and leave the area in a clean and neat condition. Any defects in material and installation are required to be repaired, and damaged products that cannot be satisfactorily repaired are required to be replaced. Submit three sets of Maintenance Manuals describing proper cleaning and minor repair procedures.

-- End of Section --

This page was intentionally left blank for duplex printing.

SECTION TABLE OF CONTENTS

DIVISION 26 - ELECTRICAL

SECTION 26 20 00

INTERIOR DISTRIBUTION SYSTEM

PART 1 GENERAL

1.1 REFERENCES
1.2 DEFINITIONS
1.3 SUBMITTALS
1.4 QUALITY ASSURANCE
1.4.1 Regulatory Requirements
1.4.2 Standard Products
1.4.2.1 Alternative Qualifications
1.4.2.2 Material and Equipment Manufacturing Date
1.5 MAINTENANCE
1.5.1 Electrical Systems
1.6 WARRANTY

PART 2 PRODUCTS

2.1 MATERIALS AND EQUIPMENT
2.2 CONDUIT AND FITTINGS
2.2.1 Rigid Metallic Conduit
2.2.1.1 Rigid, Threaded Zinc-Coated Steel Conduit
2.2.1.2 Rigid Aluminum Conduit
2.2.2 Rigid Nonmetallic Conduit
2.2.3 Fittings for Metal Conduit, EMT, and Flexible Metal Conduit
2.2.3.1 Fittings for Rigid Metal Conduit and IMC
2.2.4 Fittings for Rigid Nonmetallic Conduit
2.3 OPEN TELECOMMUNICATIONS CABLE SUPPORT
2.3.1 Open Top Cable Supports
2.3.2 Closed Ring Cable Supports
2.4 OUTLET BOXES AND COVERS
2.4.1 Outlet Boxes for Telecommunications System
2.5 CABINETS, JUNCTION BOXES, AND PULL BOXES
2.6 WIRES AND CABLES
2.6.1 Conductors
2.6.1.1 Minimum Conductor Sizes
2.6.2 Color Coding
2.6.2.1 Ground and Neutral Conductors
2.6.3 Insulation
2.7 SPLICES AND TERMINATION COMPONENTS
2.8 DEVICE PLATES
2.9 SWITCHES
2.9.1 Toggle Switches
2.10 RECEPTACLES
2.10.1 Split Duplex Receptacles
2.11 PANELBOARDS
2.11.1 Circuit Breakers
2.12 TELECOMMUNICATIONS SYSTEM

2.13 MANUFACTURER'S NAMEPLATE
2.14 FIELD FABRICATED NAMEPLATES
2.15 WIREWAYS

PART 3 EXECUTION

3.1 INSTALLATION
3.1.1 Wiring Methods
3.1.1.1 Pull Wire
3.1.2 Conduit Installation
3.1.2.1 Restrictions Applicable to Aluminum Conduit
3.1.2.2 Restrictions Applicable to EMT
3.1.2.3 Conduit Support
3.1.2.4 Directional Changes in Conduit Runs
3.1.2.5 Locknuts and Bushings
3.1.2.6 Flexible Connections
3.1.3 Boxes, Outlets, and Supports
3.1.3.1 Boxes
3.1.3.2 Pull Boxes
3.1.4 Mounting Heights
3.1.5 Conductor Identification
3.1.5.1 Marking Strips
3.1.6 Splices
3.1.7 Covers and Device Plates
3.1.8 Electrical Penetrations
3.1.9 Repair of Existing Work
3.1.9.1 Workmanship
3.1.9.2 Existing Concealed Wiring to be Removed
3.1.9.3 Removal of Existing Electrical Distribution System
3.1.9.4 Continuation of Service
3.2 FIELD FABRICATED NAMEPLATE MOUNTING
3.3 WARNING SIGN MOUNTING
3.4 FIELD APPLIED PAINTING
3.5 FIELD QUALITY CONTROL
3.5.1 Devices Subject to Manual Operation
3.5.2 600-Volt Wiring Test
3.5.3 Phase Rotation Test

-- End of Section Table of Contents --

SECTION 26 20 00

INTERIOR DISTRIBUTION SYSTEM

PART 1 GENERAL

1.1 REFERENCES

The publications listed below form a part of this specification to the extent referenced. The publications are referred to within the text by the basic designation only.

ASTM INTERNATIONAL (ASTM)

ASTM D709	(2017) Standard Specification for Laminated Thermosetting Materials

INSTITUTE OF ELECTRICAL AND ELECTRONICS ENGINEERS (IEEE)

IEEE 100	(2000; Archived) The Authoritative Dictionary of IEEE Standards Terms

INTERNATIONAL ELECTRICAL TESTING ASSOCIATION (NETA)

NETA ATS	(2021) Standard for Acceptance Testing Specifications for Electrical Power Equipment and Systems

NATIONAL ELECTRICAL CONTRACTORS ASSOCIATION (NECA)

NECA NEIS 1	(2015) Standard for Good Workmanship in Electrical Construction

NATIONAL ELECTRICAL MANUFACTURERS ASSOCIATION (NEMA)

ANSI C80.1	(2020) American National Standard for Electrical Rigid Steel Conduit (ERSC)
ANSI C80.5	(2020) American National Standard for Electrical Rigid Aluminum Conduit
NEMA ICS 1	(2000; R 2015) Standard for Industrial Control and Systems: General Requirements
NEMA ICS 6	(1993; R 2016) Industrial Control and Systems: Enclosures
NEMA TC 2	(2020) Standard for Electrical Polyvinyl Chloride (PVC) Conduit
NEMA TC 3	(2021) Polyvinyl Chloride (PVC) Fittings for Use With Rigid PVC Conduit and Tubing
NEMA TC 14	(2002) Standard for Reinforced Thermosetting Resin Conduit (RTRC) and Fittings

NEMA WD 1	(1999; R 2020) Standard for General Color Requirements for Wiring Devices
NEMA WD 6	(2016) Wiring Devices Dimensions Specifications

NATIONAL FIRE PROTECTION ASSOCIATION (NFPA)

NFPA 70	(2020; ERTA 20-1 2020; ERTA 20-2 2020; TIA 20-1; TIA 20-2; TIA 20-3; TIA 20-4) National Electrical Code
NFPA 70E	(2021) Standard for Electrical Safety in the Workplace

TELECOMMUNICATIONS INDUSTRY ASSOCIATION (TIA)

TIA-569	(2019e) Telecommunications Pathways and Spaces

UNDERWRITERS LABORATORIES (UL)

UL 6	(2007; Reprint Sep 2019) UL Standard for Safety Electrical Rigid Metal Conduit-Steel
UL 6A	(2008; Reprint Mar 2021) UL Standard for Safety Electrical Rigid Metal Conduit - Aluminum, Red Brass, and Stainless Steel
UL 20	(2018; Reprint Jan 2021) UL Standard for Safety General-Use Snap Switches
UL 50	(2015) UL Standard for Safety Enclosures for Electrical Equipment, Non-Environmental Considerations
UL 83	(2017; Reprint Mar 2020) UL Standard for Safety Thermoplastic-Insulated Wires and Cables
UL 486A-486B	(2018; Reprint May 2021) UL Standard for Safety Wire Connectors
UL 486C	(2018; Reprint May 2021) UL Standard for Safety Splicing Wire Connectors
UL 498	(2017; Reprint Sep 2021) UL Standard for Safety Attachment Plugs and Receptacles
UL 510	(2020) UL Standard for Safety Polyvinyl Chloride, Polyethylene and Rubber Insulating Tape
UL 514A	(2013; Reprint Aug 2017) UL Standard for Safety Metallic Outlet Boxes
UL 514B	(2012; Reprint May 2020) Conduit, Tubing and Cable Fittings

UL 514C	(2014; Reprint Feb 2020) UL Standard for Safety Nonmetallic Outlet Boxes, Flush-Device Boxes, and Covers
UL 651	(2011; Reprint Mar 2020) UL Standard for Safety Schedule 40, 80, Type EB and A Rigid PVC Conduit and Fittings
UL 870	(2016; Reprint Mar 2019) UL Standard for Safety Wireways, Auxiliary Gutters, and Associated Fittings
UL 2043	(2013) Fire Test for Heat and Visible Smoke Release for Discrete Products and Their Accessories Installed in Air-Handling Spaces

1.2 DEFINITIONS

Unless otherwise specified or indicated, electrical and electronics terms used in these specifications, and on the drawings, are as defined in IEEE 100.

1.3 SUBMITTALS

Government approval is required for submittals with a "G" or "S" classification. Submittals not having a "G" or "S" classification are for information only. When used, a code following the "G" classification identifies the office that will review the submittal for the Government. Submit the following in accordance with Section 01 33 00 SUBMITTAL PROCEDURES:

SD-02 Shop Drawings

Wireways; G, DO

Marking Strips Drawings; G, DO

SD-03 Product Data

Receptacles; G, DO

SD-06 Test Reports

600-volt Wiring Test; G, PO

SD-10 Operation and Maintenance DataElectrical Systems, Data Package 5; G, PO

1.4 QUALITY ASSURANCE

1.4.1 Regulatory Requirements

In each of the publications referred to herein, consider the advisory provisions to be mandatory, as though the word, "must" had been substituted for "should" wherever it appears. Interpret references in these publications to the "authority having jurisdiction," or words of similar meaning, to mean the Contracting Officer. Provide equipment,

materials, installation, and workmanship in accordance with NFPA 70 unless more stringent requirements are specified or indicated. NECA NEIS 1 shall be considered the minimum standard for workmanship.

1.4.2 Standard Products

Provide materials and equipment that are products of manufacturers regularly engaged in the production of such products which are of equal material, design and workmanship and:

a. Have been in satisfactory commercial or industrial use for 2 years prior to bid opening including applications of equipment and materials under similar circumstances and of similar size.

b. Have been on sale on the commercial market through advertisements, manufacturers' catalogs, or brochures during the 2-year period.

c. Where two or more items of the same class of equipment are required, provide products of a single manufacturer; however, the component parts of the item need not be the products of the same manufacturer unless stated in this section.

1.4.2.1 Alternative Qualifications

Products having less than a 2-year field service record will be acceptable if a certified record of satisfactory field operation for not less than 6000 hours, exclusive of the manufacturers' factory or laboratory tests, is furnished.

1.4.2.2 Material and Equipment Manufacturing Date

Products manufactured more than 3 years prior to date of delivery to site are not acceptable.

1.5 MAINTENANCE

1.5.1 Electrical Systems

Submit operation and maintenance data as specified herein. Submit operation and maintenance manuals for electrical systems that provide basic data relating to the design, operation, and maintenance of the electrical distribution system for the building. Include the following:

a. Schematic diagram of electrical control system (other than HVAC, covered elsewhere).

b. Manufacturers' operating and maintenance manuals on active electrical equipment.1.6 WARRANTY

Provide equipment items supported by service organizations that are reasonably convenient to the equipment installation in order to render satisfactory service to the equipment on a regular and emergency basis during the warranty period of the contract.

PART 2 PRODUCTS

2.1 MATERIALS AND EQUIPMENT

As a minimum, meet requirements of UL, where UL standards are established

for those items, and requirements of NFPA 70 for all materials, equipment, and devices.

2.2 CONDUIT AND FITTINGS

Conform to the following:

2.2.1 Rigid Metallic Conduit

2.2.1.1 Rigid, Threaded Zinc-Coated Steel Conduit

ANSI C80.1, UL 6.

2.2.1.2 Rigid Aluminum Conduit

ANSI C80.5, UL 6A.

2.2.2 Rigid Nonmetallic Conduit

PVC Type EPC-40 in accordance with NEMA TC 2,UL 651.

2.2.3 Fittings for Metal Conduit, EMT, and Flexible Metal Conduit

UL 514B. Ferrous fittings: cadmium- or zinc-coated in accordance with UL 514B.

2.2.3.1 Fittings for Rigid Metal Conduit and IMC

Threaded-type. Split couplings unacceptable.

2.2.4 Fittings for Rigid Nonmetallic Conduit

NEMA TC 3 for PVC and NEMA TC 14 for fiberglass, and UL 514B.

2.3 OPEN TELECOMMUNICATIONS CABLE SUPPORT

2.3.1 Open Top Cable Supports

Provide open top cable supports in accordance with UL 2043. Provide galvanized steel open top cable supports.

2.3.2 Closed Ring Cable Supports

Provide closed ring cable supports in accordance with UL 2043. Provide galvanized steel closed ring cable supports.

2.4 OUTLET BOXES AND COVERS

UL 514A, cadmium- or zinc-coated, if ferrous metal. UL 514C, if nonmetallic.

2.4.1 Outlet Boxes for Telecommunications System

Provide the following:

a. Standard type 4 inches square by 2 1/8 inches deep.

b. Outlet boxes for wall-mounted telecommunications outlets: 4 by 2 1/8 by 2 1/8 inches deep.

c. Depth of boxes: large enough to allow manufacturers' recommended conductor bend radii.

2.5 CABINETS, JUNCTION BOXES, AND PULL BOXES

UL 50; volume greater than 100 cubic inches, NEMA Type 1 enclosure; sheet steel, hot-dip, zinc-coated. Where exposed to wet, damp, or corrosive environments, NEMA Type 3R.

2.6 WIRES AND CABLES

Provide wires and cables in accordance applicable requirements of NFPA 70 and UL for type of insulation, jacket, and conductor specified or indicated. Do not use wires and cables manufactured more than 12 months prior to date of delivery to site.

2.6.1 Conductors

Provide the following:

a. Conductor sizes and capacities shown are based on copper, unless indicated otherwise.

b. Conductors No. 8 AWG and larger diameter: stranded.

c. Conductors No. 10 AWG and smaller diameter: solid.

d. Conductors for remote control, alarm, and signal circuits, classes 1, 2, and 3: stranded unless specifically indicated otherwise.

2.6.1.1 Minimum Conductor Sizes

Provide minimum conductor size in accordance with the following:

a. Branch circuits: No. 12 AWG unless otherwise noted on plans.

b. Class 1 remote-control and signal circuits: No. 14 AWG.

c. Class 2 low-energy, remote-control and signal circuits: No. 16 AWG.

d. Class 3 low-energy, remote-control, alarm and signal circuits: No. 22 AWG.

e. Digital low voltage lighting control (DLVLC) system at 24 Volts or less: Category 5 UTP cables in accordance with DLVLC system manufacturer requirements.

2.6.2 Color Coding

Provide color coding for service, feeder, branch, control, and signaling circuit conductors.

2.6.2.1 Ground and Neutral Conductors

Provide color coding of ground and neutral conductors as follows:

a. Grounding conductors: Green.

b. Neutral conductors: White.

c. Exception, where neutrals of more than one system are installed in same raceway or box, other neutrals color coding: white with a different colored (not green) stripe for each.

2.6.3 Insulation

Unless specified or indicated otherwise or required by NFPA 70, provide power and lighting wires rated for 600-volts, Type THWN/THHN conforming to UL 83, except that grounding wire may be type TW conforming to UL 83; remote-control and signal circuits: Type TW or TF, conforming to UL 83. Where equipment or devices require 90-degree Centigrade (C) conductors, provide only conductors with 90-degree C insulation or better.

2.7 SPLICES AND TERMINATION COMPONENTS

UL 486A-486B for wire connectors and UL 510 for insulating tapes. Connectors for No. 10 AWG and smaller diameter wires: insulated, pressure-type in accordance with UL 486A-486B or UL 486C (twist-on splicing connector). Provide solderless terminal lugs on stranded conductors.

2.8 DEVICE PLATES

Provide the following:

a. UL listed, one-piece device plates for outlets to suit the devices installed.

b. For metal outlet boxes, plates on unfinished walls: zinc-coated sheet steel or cast metal having round or beveled edges.

c. For nonmetallic boxes and fittings, other suitable plates may be provided.

f. Screws: machine-type with countersunk heads in color to match finish of plate.

g. Sectional type device plates are not be permitted.

h. Plates installed in wet locations: gasketed and UL listed for "wet locations."

2.9 SWITCHES

2.9.1 Toggle Switches

NEMA WD 1, UL 20, single pole, totally enclosed with bodies of thermoplastic or thermoset plastic and mounting strap with grounding screw. Include the following:

a. Handles: white thermoplastic.

b. Wiring terminals: screw-type, side-wired.

c. Contacts: silver-cadmium and contact arm - one-piece copper alloy.

d. Switches: rated quiet-type ac only, 120/277 volts, with current

rating and number of poles indicated.

2.10 RECEPTACLES

Provide the following:

a. UL 498, general purpose specification grade, grounding-type. Residential grade receptacles are not acceptable.

b. Ratings and configurations: as indicated.

c. Bodies: white as per NEMA WD 1.

d. Face and body: thermoplastic supported on a metal mounting strap.

e. Dimensional requirements: per NEMA WD 6.

f. Screw-type, side-wired wiring terminals or of the solderless pressure type having suitable conductor-release arrangement.

g. Grounding pole connected to mounting strap.

h. The receptacle: containing triple-wipe power contacts and double or triple-wipe ground contacts.

i. Controlled receptacles: as required per ASHRAE 90.1. Provide marking for controlled receptacle per NFPA 70.

2.10.1 Split Duplex Receptacles

Provide separate terminals for each ungrounded pole. One receptacle must be controlled separately.

2.11 PANELBOARDS

Provide panelboards in accordance with the following:

2.11.1 Circuit Breakers

Provide UL 489, thermal magnetic-type, 20 ampere breakers for circuits 12LB-20 and 12LB-21. Breaker terminals: UL listed as suitable for type of conductor provided. Series rated circuit breakers and plug-in circuit breakers are unacceptable.

2.12 TELECOMMUNICATIONS SYSTEM

Provide system of telecommunications wire-supporting structures (pathway), including: outlet boxes, conduits with pull wires wireways, cable trays, and other accessories for telecommunications outlets and pathway in accordance with TIA-569 and as specified herein. Additional telecommunications requirements are specified in Section 27 10 00 BUILDING TELECOMMUNICATIONS CABLING SYSTEM.

2.13 MANUFACTURER'S NAMEPLATE

Provide on each item of equipment a nameplate bearing the manufacturer's name, address, model number, and serial number securely affixed in a conspicuous place; the nameplate of the distributing agent will not be acceptable.

2.14 FIELD FABRICATED NAMEPLATES

Provide field fabricated nameplates in accordance with the following:

a. ASTM D709.

b. Provide laminated plastic nameplates for each equipment enclosure, relay, switch, receptacle, and device; as specified or as indicated on the drawings.

c. Each nameplate inscription: identify the function and, when applicable, the position.

d. Nameplates: melamine plastic, 0.125 inch thick, white with black center core.

f. Surface: matte finish. Corners: square. Accurately align lettering and engrave into the core.

g. Minimum size of nameplates: one by 2.5 inches.

h. Lettering size and style: a minimum of 0.25 inch high normal block style.

2.15 WIREWAYS

UL 870. Material: steel epoxy painted 16 gauge for heights and depths up to 6 by 6 inches, and 14 gauge for heights and depths up to 12 by 12 inches. Provide in length required for the application with screw- cover NEMA 1 enclosure per NEMA ICS 6.

PART 3 EXECUTION

3.1 INSTALLATION

Electrical installations, including weatherproof and hazardous locations and ducts, plenums and other air-handling spaces: conform to requirements of NFPA 70 and to requirements specified herein.

3.1.1 Wiring Methods

Provide insulated conductors installed in rigid steel conduit, IMC, rigid nonmetallic conduit, or EMT, except where specifically indicated or specified otherwise or required by NFPA 70 to be installed otherwise. Grounding conductor: separate from electrical system neutral conductor. Provide insulated green equipment grounding conductor for circuit(s) installed in conduit and raceways. Shared neutral, or multi-wire branch circuits, are not permitted with arc-fault circuit interrupters. Minimum conduit size: 1/2 inch in diameter for low voltage lighting and power circuits. Vertical distribution in multiple story buildings: made with metal conduit in fire-rated shafts, with metal conduit extending through shafts for minimum distance of 6 inches. Firestop conduit which penetrates fire-rated walls, fire-rated partitions, or fire-rated floors.

3.1.1.1 Pull Wire

Install pull wires in empty conduits. Pull wire: plastic having minimum 200-pound force tensile strength. Leave minimum 36 inches of slack at

each end of pull wire.

3.1.2 Conduit Installation

Unless indicated otherwise, conceal conduit under floor slabs and within finished walls, ceilings, and floors. Keep conduit minimum 6 inches away from parallel runs of flues and steam or hot water pipes. Install conduit parallel with or at right angles to ceilings, walls, and structural members where located above accessible ceilings and where conduit will be visible after completion of project.

3.1.2.1 Restrictions Applicable to Aluminum Conduit

a. Do not install underground or encase in concrete or masonry.

b. Do not use brass or bronze fittings.

c. Do not use when the enclosed conductors must be shielded from the effects of High-altitude Electromagnetic Pulse (HEMP).

3.1.2.2 Restrictions Applicable to EMT

a. Do not install underground.

b. Do not encase in concrete, mortar, grout, or other cementitious materials.

c. Do not use in areas subject to physical damage including but not limited to equipment rooms where moving or replacing equipment could physically damage the EMT.

d. Do not use in hazardous areas.

e. Do not use outdoors.

f. Do not use in fire pump rooms.

g. Do not use when the enclosed conductors must be shielded from the effects of High-altitude Electromagnetic Pulse (HEMP).

3.1.2.3 Conduit Support

Support conduit by pipe straps, wall brackets, threaded rod conduit hangers, or ceiling trapeze. Plastic cable ties are not acceptable. Fasten by wood screws to wood; by toggle bolts on hollow masonry units; by concrete inserts or expansion bolts on concrete or brick; and by machine screws, welded threaded studs, or spring-tension clamps on steel work. Threaded C-clamps may be used on rigid steel conduit only. Do not weld conduits or pipe straps to steel structures. Do not exceed one-fourth proof test load for load applied to fasteners. Provide vibration resistant and shock-resistant fasteners attached to concrete ceiling. Do not cut main reinforcing bars for any holes cut to depth of more than 1 1/2 inches in reinforced concrete beams or to depth of more than 3/4 inch in concrete joints. Fill unused holes. In partitions of light steel construction, use sheet metal screws. In suspended-ceiling construction, run conduit above ceiling. Do not support conduit by ceiling support system. Conduit and box systems: supported independently of both (a) tie wires supporting ceiling grid system, and (b) ceiling grid system into which ceiling panels are placed. Do not share supporting means between

electrical raceways and mechanical piping or ducts. Coordinate installation with above-ceiling mechanical systems to assure maximum accessibility to all systems. Spring-steel fasteners may be used for lighting branch circuit conduit supports in suspended ceilings in dry locations. Support exposed risers in wire shafts of multistory buildings by U-clamp hangers at each floor level and at 10 foot maximum intervals. Where conduit crosses building expansion joints, provide suitable watertight expansion fitting that maintains conduit electrical continuity by bonding jumpers or other means. For conduits greater than 2 1/2 inches inside diameter, provide supports to resist forces of 0.5 times the equipment weight in any direction and 1.5 times the equipment weight in the downward direction.

3.1.2.4 Directional Changes in Conduit Runs

Make changes in direction of runs with symmetrical bends or cast-metal fittings. Make field-made bends and offsets with hickey or conduit-bending machine. Do not install crushed or deformed conduits. Avoid trapped conduits. Prevent plaster, dirt, or trash from lodging in conduits, boxes, fittings, and equipment during construction. Free clogged conduits of obstructions.

3.1.2.5 Locknuts and Bushings

Fasten conduits to sheet metal boxes and cabinets with two locknuts where required by NFPA 70, where insulated bushings are used, and where bushings cannot be brought into firm contact with the box; otherwise, use at least minimum single locknut and bushing. Provide locknuts with sharp edges for digging into wall of metal enclosures. Install bushings on ends of conduits, and provide insulating type where required by NFPA 70.

3.1.2.6 Flexible Connections

Provide flexible steel conduit between 3 and 6 feet in length for recessed and semirecessed lighting fixtures; for equipment subject to vibration, noise transmission, or movement; and for motors. Install flexible conduit to allow 20 percent slack. Minimum flexible steel conduit size: 1/2 inch diameter. Provide liquid tight flexible conduit in wet and damp locations for equipment subject to vibration, noise transmission, movement or motors. Provide separate ground conductor across flexible connections. Plastic cable ties are not acceptable as a support method.

3.1.3 Boxes, Outlets, and Supports

Provide boxes in wiring and raceway systems wherever required for pulling of wires, making connections, and mounting of devices or fixtures. Boxes for metallic raceways: cast-metal, hub-type when located in wet locations, when surface mounted on outside of exterior surfaces, and when specifically indicated. Boxes in other locations: sheet steel, except that aluminum boxes may be used with aluminum conduit, and nonmetallic boxes may be used with nonmetallic sheathed cable conduit system. Provide each box with volume required by NFPA 70 for number of conductors enclosed in box. Boxes for mounting lighting fixtures: minimum 4 inches square, or octagonal, except that smaller boxes may be installed as required by fixture configurations, as approved. Boxes for use in masonry-block or tile walls: square-cornered, tile-type, or standard boxes having square-cornered, tile-type covers. Provide gaskets for cast-metal boxes installed in wet locations and boxes installed flush with outside of exterior surfaces. Provide separate boxes for flush or recessed fixtures

when required by fixture terminal operating temperature; provide readily removable fixtures for access to boxes unless ceiling access panels are provided. Support boxes and pendants for surface-mounted fixtures on suspended ceilings independently of ceiling supports. Fasten boxes and supports with wood screws on wood, with bolts and expansion shields on concrete or brick, with toggle bolts on hollow masonry units, and with machine screws or welded studs on steel. In open overhead spaces, cast boxes threaded to raceways need not be separately supported except where used for fixture support; support sheet metal boxes directly from building structure or by bar hangers. Where bar hangers are used, attach bar to raceways on opposite sides of box, and support raceway with approved-type fastener maximum 24 inches from box. When penetrating reinforced concrete members, avoid cutting reinforcing steel.

3.1.3.1 Boxes

Boxes for use with raceway systems: minimum 1 1/2 inches deep, except where shallower boxes required by structural conditions are approved. Boxes for other than lighting fixture outlets: minimum 4 inches square, except that 4 by 2 inch boxes may be used where only one raceway enters outlet. Telecommunications outlets: a minimum of4 inches square by 2 1/8 inches deep. Mount outlet boxes flush in finished walls.

3.1.3.2 Pull Boxes

Construct of at least minimum size required by NFPA 70 of code-gauge aluminum or galvanized sheet steel, and compatible with nonmetallic raceway systems, except where cast-metal boxes are required in locations specified herein. Provide boxes with screw-fastened covers. Where several feeders pass through common pull box, tag feeders to indicate clearly electrical characteristics, circuit number, and panel designation.

3.1.4 Mounting Heights

Mount lighting switches 48 inches above finished floor. Mount receptacles and telecommunications outlets 18 inches above finished floor. Mount other devices as indicated.

3.1.5 Conductor Identification

Provide conductor identification within each enclosure where tap, splice, or termination is made. For conductors No. 6 AWG and smaller diameter, provide color coding by factory-applied, color-impregnated insulation. For conductors No. 4 AWG and larger diameter, provide color coding by plastic-coated, self-sticking markers; colored nylon cable ties and plates; or heat shrink-type sleeves..

3.1.5.1 Marking Strips

Provide marking strips for identification of power distribution, control, data, and communications cables in accordance with the following:

a. Provide white or other light-colored plastic marking strips, fastened by screws to each terminal block, for wire designations.

b. Use permanent ink for the wire numbers

c. Provide reversible marking strips to permit marking both sides, or provide two marking strips with each block.

d. Size marking strips to accommodate the two sets of wire numbers.

e. Assign a device designation in accordance with NEMA ICS 1 to each device to which a connection is made. Mark each device terminal to which a connection is made with a distinct terminal marking corresponding to the wire designation used on the Contractor's schematic and connection diagrams.

f. The wire (terminal point) designations used on the Contractor's wiring diagrams and printed on terminal block marking strips may be according to the Contractor's standard practice; however, provide additional wire and cable designations for identification of remote (external) circuits for the Government's wire designations.

g. Prints of the marking strips drawings submitted for approval will be so marked and returned to the Contractor for addition of the designations to the terminal strips and tracings, along with any rearrangement of points required.

3.1.6 Splices

Make splices in accessible locations. Make splices in conductors No. 10 AWG and smaller diameter with insulated, pressure-type connector. Make splices in conductors No. 8 AWG and larger diameter with solderless connector, and cover with insulation material equivalent to conductor insulation.

3.1.7 Covers and Device Plates

Install with edges in continuous contact with finished wall surfaces without use of mats or similar devices. Plaster fillings are not permitted. Install plates with alignment tolerance of 1/16 inch. Use of sectional-type device plates are not permitted. Provide gasket for plates installed in wet locations.

3.1.8 Electrical Penetrations

Seal openings around electrical penetrations through fire resistance-rated walls, partitions, floors, or ceilings in accordance with Section 07 84 00 FIRESTOPPING.

3.1.9 Repair of Existing Work

Perform repair of existing work, demolition, and modification of existing electrical distribution systems as follows:

3.1.9.1 Workmanship

Lay out work in advance. Exercise care where cutting, channeling, chasing, or drilling of floors, walls, partitions, ceilings, or other surfaces is necessary for proper installation, support, or anchorage of conduit, raceways, or other electrical work. Repair damage to buildings, piping, and equipment using skilled craftsmen of trades involved.

3.1.9.2 Existing Concealed Wiring to be Removed

Disconnect existing concealed wiring to be removed from its source. Remove conductors; cut conduit flush with floor, underside of floor, and

through walls; and seal openings.

3.1.9.3 Removal of Existing Electrical Distribution System

Removal of existing electrical distribution system equipment includes equipment's associated wiring, including conductors, cables, exposed conduit, surface metal raceways, boxes, and fittings, as indicated.

3.1.9.4 Continuation of Service

Maintain continuity of existing circuits of equipment to remain. Maintain existing circuits of equipment energized. Restore circuits wiring and power which are to remain but were disturbed during demolition back to original condition.

3.2 FIELD FABRICATED NAMEPLATE MOUNTING

Provide number, location, and letter designation of nameplates as indicated. Fasten nameplates to the device with a minimum of two sheet-metal screws or two rivets.

3.3 WARNING SIGN MOUNTING

Provide the number of signs required to be readable from each accessible side. Space the signs in accordance with NFPA 70E.

3.4 FIELD APPLIED PAINTING

Paint electrical equipment as required to match finish of adjacent surfaces or to meet the indicated or specified safety criteria.

3.5 FIELD QUALITY CONTROL

Furnish test equipment and personnel and submit written copies of test results. Give Contracting Officer 5 working days notice prior to each test s. Where applicable, test electrical equipment in accordance with NETA ATS.

3.5.1 Devices Subject to Manual Operation

Operate each device subject to manual operation at least five times, demonstrating satisfactory operation each time.

3.5.2 600-Volt Wiring Test

Test wiring rated 600 volt and less to verify that no short circuits or accidental grounds exist. Perform insulation resistance tests on wiring No. 6 AWG and larger diameter using instrument which applies voltage of 1,000 volts DC for 600 volt rated wiring and 500 volts DC for 300 volt rated wiring per NETA ATS to provide direct reading of resistance.

All new or existing wiring No. 8 AWG and smaller must be tested to verify that no short circuits or accidental grounds exist.

3.5.3 Phase Rotation Test

Perform phase rotation test to ensure proper rotation of service power prior to operation of new or reinstalled equipment using a phase rotation meter. Follow the meter manual directions performing the test.

-- End of Section --

This page was intentionally left blank for duplex printing.

SECTION TABLE OF CONTENTS

DIVISION 26 - ELECTRICAL

SECTION 26 51 00

INTERIOR LIGHTING

PART 1 GENERAL

1.1 REFERENCES
1.1.1 SCOPE OF WORK
1.2 RELATED REQUIREMENTS
1.3 DEFINITIONS
1.4 SUBMITTALS
1.5 QUALITY ASSURANCE
1.5.1 Regulatory Requirements
1.5.2 Standard Products
1.5.2.1 Alternative Qualifications
1.5.2.2 Material and Equipment Manufacturing Date
1.6 WARRANTY

PART 2 PRODUCTS

2.1 PRODUCT COORDINATION
2.2 LIGHT SOURCES
2.2.1 Light Sources

PART 3 EXECUTION

3.1 INSTALLATION
3.1.1 Light Sources

-- End of Section Table of Contents --

SECTION 26 51 00

INTERIOR LIGHTING

PART 1 GENERAL

1.1 REFERENCES

The publications listed below form a part of this specification to the extent referenced. The publications are referred to within the text by the basic designation only.

EUROPEAN UNION (EU)

Directive 2011/65/EU	(2011) Restriction of the Use of Certain Hazardous Substances in Electrical and Electronic Equipment

ILLUMINATING ENGINEERING SOCIETY (IES)

ANSI/IES LM-80	(2020) Approved Method: Measuring Luminous Flux and Color Maintenance of LED Packages, Arrays and Modules
ANSI/IES LS-1	(2020) Lighting Science: Nomenclature and Definitions for Illuminating Engineering
IES Lighting Library	IES Lighting Library

INSTITUTE OF ELECTRICAL AND ELECTRONICS ENGINEERS (IEEE)

IEEE 100	(2000; Archived) The Authoritative Dictionary of IEEE Standards Terms
IEEE C2	(2023) National Electrical Safety Code

NATIONAL ELECTRICAL MANUFACTURERS ASSOCIATION (NEMA)

NEMA ANSLG C78.377	(2024) Electric Lamps— Specifications for the Chromaticity of Solid State Lighting Products
NEMA SSL 3	(2011) High-Power White LED Binning for General Illumination

NATIONAL FIRE PROTECTION ASSOCIATION (NFPA)

NFPA 70	(2023; ERTA 1 2024; TIA 24-1) National Electrical Code

1.1.1 SCOPE OF WORK

The scope of work for the lighting system on this contract includes the removal and disposal of failed lamps and replacement swith like equal products.

1.2 RELATED REQUIREMENTS

Materials not considered to be luminaires, luminaire accessories, or lighting equipment are specified in Section 26 20 00 INTERIOR DISTRIBUTION SYSTEM.

1.3 DEFINITIONS

a. Unless otherwise specified or indicated, electrical and electronics terms used in these specifications and on the drawings, must be as defined in IEEE 100 and ANSI/IES LS-1.

b. For LED luminaire light sources, "Useful Life" is the operating hours before reaching 70 percent of the initial rated lumen output (L70) with no catastrophic failures under normal operating conditions. This is also known as 70 percent "Rated Lumen Maintenance Life" as defined in ANSI/IES LM-80.

c. For LED luminaires, "Luminaire Efficacy" (LE) is the appropriate measure of energy efficiency, measured in lumens/watt. This is gathered from LM-79 data for the luminaire, in which absolute photometry is used to measure the lumen output of the luminaire as one entity, not the source separately and then the source and housing together.

d. Total harmonic distortion (THD) is the root mean square (RMS) of all the harmonic components divided by the total fundamental current.

1.4 SUBMITTALS

Government approval is required for submittals with a "G" or "S" classification. Submittals not having a "G" or "S" classification are for information only. When used, a code following the "G" classification identifies the office that will review the submittal for the Government. Submit the following in accordance with Section 01 33 00 SUBMITTAL PROCEDURES:

SD-03 Product Data

Light Sources; G, RO

1.5 QUALITY ASSURANCE

Data, drawings, and reports must employ the terminology, classifications and methods prescribed by the IES Lighting Library as applicable, for the lighting system specified.

1.5.1 Regulatory Requirements

Equipment, materials, installation, and workmanship must be in accordance with the mandatory and advisory provisions of NFPA 70, unless more stringent requirements are specified or indicated. Provide luminaires and assembled components that are approved by and bear the label of UL for the applicable location and conditions unless otherwise specified.

1.5.2 Standard Products

Provide materials and equipment that are products of manufacturers regularly engaged in the production of such products which are of equal material, design, and workmanship. Products must have been in satisfactory commercial or industrial use for six months prior to bid opening. The six-month period must include applications of equipment and materials under similar circumstances and of similar size. The product must have been on sale on the commercial market through advertisements, manufacturers' catalogs, or brochures during the six-month period. Where two or more items of the same class of equipment are required, these items must be products of a single manufacturer; however, the component parts of the item need not be the products of the same manufacturer unless stated in this section.

1.5.2.1 Alternative Qualifications

Products having less than a six-month field service record will be acceptable if a certified record of satisfactory field operation for not less than 6000 hours, exclusive of the manufacturers' factory or laboratory tests, is furnished.

1.5.2.2 Material and Equipment Manufacturing Date

Do not use products manufactured more than six months prior to date of delivery to site, unless specified otherwise.

1.6 WARRANTY

Support all equipment items by service organizations which are reasonably convenient to the equipment installation in order to render satisfactory service to the equipment on a regular and emergency basis during the warranty period of the contract.

PART 2 PRODUCTS

2.1 PRODUCT COORDINATION

2.2 LIGHT SOURCES

NEMA ANSLG C78.377, NEMA SSL 3. Provide type, delivered lumen output, and wattage as indicated in the luminaire schedule on project plans.

2.2.1 Light Sources

Provide light sources that meet the following requirements:

a. Emit white light and have a nominal CCT the same as the lamps removed and similar to all current operating lamps.

b. Minimum Color Rendering Index (CRI) of 80.

c. Directive 2011/65/EU. Restriction of Hazardous Substances (RoHS) compliant.

d. Light source color consistency by utilizing a binning tolerance within a 3-step McAdam ellipse.

PART 3 EXECUTION

3.1 INSTALLATION

IEEE C2, NFPA 70.

3.1.1 Light Sources

When light sources are not provided as an integral part of the luminaire, deliver light sources of the type, wattage, lumen output, color temperature (CCT), color rendering index (CRI), and voltage rating indicated to the project site and install just prior to project completion, if not already installed in the luminaires from the factory.

-- End of Section --

This page was intentionally left blank for duplex printing.

SECTION TABLE OF CONTENTS

DIVISION 27 - COMMUNICATIONS

SECTION 27 10 00

BUILDING TELECOMMUNICATIONS CABLING SYSTEM

PART 1 GENERAL

1.1 REFERENCES
1.2 RELATED REQUIREMENTS
1.3 DEFINITIONS
1.3.1 Campus Distributor (CD)
1.3.2 Building Distributor (BD)
1.3.3 Floor Distributor (FD)
1.3.4 Telecommunications Room (TR)
1.3.5 Entrance Facility (EF) (Telecommunications)
1.3.6 Equipment Room (ER) (Telecommunications)
1.3.7 Open Cable
1.3.8 Open Office
1.3.9 Pathway
1.4 SYSTEM DESCRIPTION
1.5 SUBMITTALS
1.6 QUALITY ASSURANCE
1.6.1 Shop Drawings
1.6.1.1 Telecommunications Drawings
1.6.1.2 Telecommunications Space Drawings
1.6.2 Telecommunications Qualifications
1.6.2.1 Telecommunications Contractor
1.6.2.2 Key Personnel
1.6.2.3 Minimum Manufacturer Qualifications
1.6.3 Test Plan
1.6.4 Regulatory Requirements
1.6.5 Standard Products
1.6.5.1 Alternative Qualifications
1.6.5.2 Material and Equipment Manufacturing Date
1.7 DELIVERY AND STORAGE
1.8 ENVIRONMENTAL REQUIREMENTS
1.9 WARRANTY
1.10 MAINTENANCE
1.10.1 Operation and Maintenance Manuals
1.10.2 Record Documentation

PART 2 PRODUCTS

2.1 COMPONENTS
2.2 TELECOMMUNICATIONS PATHWAY
2.3 TELECOMMUNICATIONS CABLING
2.3.1 Horizontal Cabling
2.3.1.1 Horizontal Copper
2.3.1.2 Horizontal Optical Fiber
2.3.2 Work Area Cabling
2.3.2.1 Work Area Copper

2.3.2.2 Work Area Optical Fiber
2.4 TELECOMMUNICATIONS SPACES
2.4.1 Backboards
2.5 TELECOMMUNICATIONS OUTLET/CONNECTOR ASSEMBLIES
2.5.1 Outlet/Connector Copper
2.5.2 Optical Fiber Adapters(Couplers)
2.5.3 Optical Fiber Connectors
2.5.4 Cover Plates
2.6 GROUNDING AND BONDING PRODUCTS
2.7 FIRESTOPPING MATERIAL
2.8 MANUFACTURER'S NAMEPLATE
2.9 FIELD FABRICATED NAMEPLATES
2.10 TESTS, INSPECTIONS, AND VERIFICATIONS
2.10.1 Factory Reel Tests

PART 3 EXECUTION

3.1 INSTALLATION
3.1.1 Cabling
3.1.1.1 Backbone Cable
3.1.1.2 Horizontal Cabling
3.1.2 Pathway Installations
3.1.3 Cable Tray Installation
3.1.4 Work Area Outlets
3.1.4.1 Terminations
3.1.4.2 Cover Plates
3.1.4.3 Cables
3.1.4.4 Pull Cords
3.1.5 Telecommunications Space Termination
3.1.5.1 Connector Blocks
3.1.5.2 Patch Panels
3.1.6 Electrical Penetrations
3.1.7 Grounding and Bonding
3.2 LABELING
3.2.1 Labels
3.2.2 Cable
3.2.3 Termination Hardware
3.3 FIELD APPLIED PAINTING
3.3.1 Painting Backboards
3.4 FIELD FABRICATED NAMEPLATE MOUNTING
3.5 TESTING
3.5.1 Telecommunications Cabling Testing
3.5.1.1 Inspection
3.5.1.2 Verification Tests
3.5.1.3 Performance Tests
3.5.1.4 Final Verification Tests

-- End of Section Table of Contents --

SECTION 27 10 00

BUILDING TELECOMMUNICATIONS CABLING SYSTEM

PART 1 GENERAL

1.1 REFERENCES

The publications listed below form a part of this specification to the extent referenced. The publications are referred to within the text by the basic designation only.

ASTM INTERNATIONAL (ASTM)

ASTM D709	(2017) Standard Specification for Laminated Thermosetting Materials

INSTITUTE OF ELECTRICAL AND ELECTRONICS ENGINEERS (IEEE)

IEEE 100	(2000; Archived) The Authoritative Dictionary of IEEE Standards Terms

INSULATED CABLE ENGINEERS ASSOCIATION (ICEA)

ICEA S-83-596	(2021) Indoor Optical Cable
ICEA S-90-661	(2021) Category 3 and 5E Individually Unshielded Twisted Pairs, Indoor Cables (With or Without an Overall Shield) for Use in General Purpose and LAN Communications Wiring Systems

NATIONAL ELECTRICAL CONTRACTORS ASSOCIATION (NECA)

NECA/BICSI 568	(2006) Standard for Installing Building Telecommunications Cabling

NATIONAL ELECTRICAL MANUFACTURERS ASSOCIATION (NEMA)

ANSI/NEMA WC 66	(2019) Performance Standard for Category 6 and Category 7 100 Ohm Shielded and Unshielded Twisted Pairs

NATIONAL FIRE PROTECTION ASSOCIATION (NFPA)

NFPA 70	(2023; ERTA 1 2024; TIA 24-1) National Electrical Code

TELECOMMUNICATIONS INDUSTRY ASSOCIATION (TIA)

TIA-455-21	(1988a; R 2012) FOTP-21 - Mating Durability of Fiber Optic Interconnecting Devices
TIA-526-7	(2015a; R 2022) Measurement of Optical Power Loss of Installed Single-Mode Fiber

	Cable Plant, Adoption of IEC 61280-4-2 edition 2: Fibre-Optic Communications Subsystem Test Procedures - Part 4-2: Installed Cable Plant - Single-Mode Attenuation and Optical Return Loss Measurement
TIA-526-14	(2023d) OFSTP-14A Optical Power Loss Measurements of Installed Multimode Fiber Cable Plant
TIA-568.0	(2020e) Generic Telecommunications Cabling for Customer Premises
TIA-568.1	(2020e) Commercial Building Telecommunications Infrastructure Standard
TIA-568.2	(2024e) Balanced Twisted-Pair Telecommunications Cabling and Components Standards
TIA-568.3	(2022e) Optical Fiber Cabling Components Standard
TIA-569	(2019e; Add 1 2022) Telecommunications Pathways and Spaces
TIA-570	(2024e) Residential Telecommunications Infrastructure Standard
TIA-606	(2021d) Administration Standard for Telecommunications Infrastructure
TIA-607	(2019d) Generic Telecommunications Bonding and Grounding (Earthing) for Customer Premises
TIA-1152	(2016; R 2021) Requirements for Field Test Instruments and Measurements for Balanced Twisted-Pair Cabling
TIA/EIA-598	(2014D; Add 2 2018) Optical Fiber Cable Color Coding
TIA/EIA-604-10	(2002a) FOCIS 10 Fiber Optic Connector Intermateability Standard - Type LC

U.S. FEDERAL COMMUNICATIONS COMMISSION (FCC)

FCC Part 68	Connection of Terminal Equipment to the Telephone Network (47 CFR 68)

UL SOLUTIONS (UL)

UL 444	(2017; Reprint Jun 2021) UL Standard for Safety Communications Cables
UL 467	(2022) UL Standard for Safety Grounding and Bonding Equipment

UL 514C	(2014; Reprint Apr 2024) UL Standard for Safety Nonmetallic Outlet Boxes, Flush-Device Boxes, and Covers
UL 723	(2020) UL Standard for Safety Test for Surface Burning Characteristics of Building Materials
UL 969	(2017; Reprint May 2023) UL Standard for Safety Marking and Labeling Systems
UL 1286	(2022; Reprint Mar 2024) UL Standard for Safety Office Furnishings
UL 1863	(2004; Reprint Oct 2019) UL Standard for Safety Communication Circuit Accessories

1.2 RELATED REQUIREMENTS

Section 26 20 00 INTERIOR DISTRIBUTION SYSTEM and Section 33 82 00 TELECOMMUNICATIONS, OUTSIDE PLANT (OSP), apply to this section with additions and modifications specified herein.

1.3 DEFINITIONS

Unless otherwise specified or indicated, electrical and electronics terms used in this specification shall be as defined in TIA-568.1, TIA-568.2, TIA-568.3, TIA-569, TIA-606 and IEEE 100 and herein.

1.3.1 Campus Distributor (CD)

A distributor from which the campus backbone cabling emanates. (International expression for main cross-connect (MC).)

1.3.2 Building Distributor (BD)

A distributor in which the building backbone cables terminate and at which connections to the campus backbone cables may be made. (International expression for intermediate cross-connect (IC).)

1.3.3 Floor Distributor (FD)

A distributor used to connect horizontal cable and cabling subsystems or equipment. (International expression for horizontal cross-connect (HC).)

1.3.4 Telecommunications Room (TR)

An enclosed space for housing telecommunications equipment, cable, terminations, and cross-connects. The room is the recognized cross-connect between the backbone cable and the horizontal cabling.

1.3.5 Entrance Facility (EF) (Telecommunications)

An entrance to the building for both private and public network service cables (including wireless) including the entrance point at the building wall and continuing to the equipment room.

1.3.6 Equipment Room (ER) (Telecommunications)

An environmentally controlled centralized space for telecommunications equipment that serves the occupants of a building. Equipment housed therein is considered distinct from a telecommunications room because of the nature of its complexity.

1.3.7 Open Cable

Cabling that is not run in a raceway as defined by NFPA 70. This refers to cabling that is "open" to the space in which the cable has been installed and is therefore exposed to the environmental conditions associated with that space.

1.3.8 Open Office

A floor space division provided by furniture, moveable partitions, or other means instead of by building walls.

1.3.9 Pathway

A physical infrastructure utilized for the placement and routing of telecommunications cable.

1.4 SYSTEM DESCRIPTION

The building telecommunications cabling and pathway system shall include permanently installed backbone and horizontal cabling, horizontal and backbone pathways, service entrance facilities, work area pathways, telecommunications outlet assemblies, conduit, raceway, and hardware for splicing, terminating, and interconnecting cabling necessary to transport telephone and data (including LAN) between equipment items in a building. The horizontal system shall be wired in a star topology from the telecommunications work area to the floor distributor or campus distributor at the center or hub of the star. The backbone cabling and pathway system includes intrabuilding and interbuilding interconnecting cabling, pathway, and terminal hardware. The intrabuilding backbone provides connectivity from the floor distributors to the building distributors or to the campus distributor and from the building distributors to the campus distributor as required. The backbone system shall be wired in a star topology with the campus distributor at the center or hub of the star. Provide telecommunications pathway systems referenced herein as specified in Section 26 20 00 INTERIOR DISTRIBUTION SYSTEM. The telecommunications contractor must coordinate with the NMCI/COSC/NGEN contractor concerning access to and configuration of telecommunications spaces. The telecommunications contractor may be required to coordinate work effort within the telecommunications spaces with the NMCI/COSC/NGEN contractor.

1.5 SUBMITTALS

Government approval is required for submittals with a "G" or "S" classification. Submittals not having a "G" or "S" classification are for information only. When used, a code following the "G" classification identifies the office that will review the submittal for the Government. Submit the following in accordance with Section 01 33 00 SUBMITTAL PROCEDURES:

SD-02 Shop Drawings

Telecommunications Drawings; G, DO

Telecommunications Space Drawings; G, DO

In addition to Section 01 33 00 SUBMITTAL PROCEDURES, provide shop drawings in accordance with paragraph SHOP DRAWINGS.

SD-03 Product Data

Telecommunications Cabling (backbone and horizontal); G, DO

Patch Panels; G, DO

Telecommunications Outlet/Connector Assemblies; G, DO

Equipment Support Frame; G, _____

Connector Blocks; G, DO

Spare Parts; G, DO

Submittals shall include the manufacturer's name, trade name, place of manufacture, and catalog model or number. Include performance and characteristic curves. Submittals shall also include applicable federal, military, industry, and technical society publication references. Should manufacturer's data require supplemental information for clarification, the supplemental information shall be submitted as specified in paragraph REGULATORY REQUIREMENTS and as required in Section 01 33 00 SUBMITTAL PROCEDURES.

SD-06 Test Reports

Telecommunications Cabling Testing; G, RO

SD-07 Certificates

Telecommunications Contractor Qualifications; G, RO

Key Personnel Qualifications; G, RO

Manufacturer Qualifications; G, RO

Test Plan; G, RO

SD-09 Manufacturer's Field Reports

Factory Reel Tests; G, RO

SD-10 Operation and Maintenance Data

Telecommunications Cabling and Pathway System Data Package 5; G, RO

SD-11 Closeout Submittals

Record Documentation; G, RO

1.6 QUALITY ASSURANCE

1.6.1 Shop Drawings

In exception to Section 01 33 00 SUBMITTAL PROCEDURES, submitted plan drawings shall be a minimum of 11 by 17 inches in size using a minimum scale of 1/8 inch per foot. Include wiring diagrams and installation details of equipment indicating proposed location, layout and arrangement, control panels, accessories, piping, ductwork, and other items that must be shown to ensure a coordinated installation. Wiring diagrams shall identify circuit terminals and indicate the internal wiring for each item of equipment and the interconnection between each item of equipment. Drawings shall indicate adequate clearance for operation, maintenance, and replacement of operating equipment devices. Submittals shall include the nameplate data, size, and capacity. Submittals shall also include applicable federal, military, industry, and technical society publication references.

1.6.1.1 Telecommunications Drawings

Provide registered communications distribution designer (RCDD) approved, drawings in accordance with TIA-606. The identifier for each termination and cable shall appear on the drawings. Drawings shall depict final telecommunications installed wiring system infrastructure in accordance with TIA-606. The drawings should provide details required to prove that the distribution system shall properly support connectivity from the EF telecommunications and ER telecommunications, CD's, BD's, and FD's to the telecommunications work area outlets. The following drawings shall be provided as a minimum:

a. T1 - Layout of complete building per floor - Building Area/Serving Zone Boundaries, Backbone Systems, and Horizontal Pathways. Layout of complete building per floor. The drawing indicates location of building areas, serving zones, vertical backbone diagrams, telecommunications rooms, access points, pathways, grounding system, and other systems that need to be viewed from the complete building perspective.

b. T2 - Serving Zones/Building Area Drawings - Drop Locations and Cable Identification (ID’S). Shows a building area or serving zone. These drawings show drop locations, telecommunications rooms, access points and detail call outs for common equipment rooms and other congested areas.

c. T4 - Typical Detail Drawings - Faceplate Labeling, Firestopping, Americans with Disabilities Act (ADA), Safety, Department of Transportation (DOT). Detailed drawings of symbols and typicals such as faceplate labeling, faceplate types, faceplate population installation procedures, detail racking, and raceways.

1.6.1.2 Telecommunications Space Drawings

Provide T3 drawings in accordance with TIA-606 that include telecommunications rooms plan views, pathway layout (cable tray, racks, ladder-racks, etc.), mechanical/electrical layout, and cabinet, backboard and wall elevations. Drawings shall show layout of applicable equipment including incoming cable stub or connector blocks, building protector assembly, outgoing cable connector blocks, patch panels and equipment spaces and cabinet/racks. Drawings shall include a complete list of

equipment and material, equipment rack details, proposed layout and anchorage of equipment and appurtenances, and equipment relationship to other parts of the work including clearance for maintenance and operation. Drawings may also be an enlargement of a congested area of T1 or T2 drawings.

1.6.2 Telecommunications Qualifications

Work under this section shall be performed by and the equipment shall be provided by the approved telecommunications contractor and key personnel. Qualifications shall be provided for: the telecommunications system contractor, the telecommunications system installer, and the supervisor (if different from the installer). A minimum of 30 days prior to installation, submit documentation of the experience of the telecommunications contractor and of the key personnel.

1.6.2.1 Telecommunications Contractor

The telecommunications contractor shall be a firm which is regularly and professionally engaged in the business of the applications, installation, and testing of the specified telecommunications systems and equipment. The telecommunications contractor shall demonstrate experience in providing successful telecommunications systems within the past 3 years of similar scope and size. Submit documentation for a minimum of three and a maximum of five successful telecommunication system installations for the telecommunications contractor.

1.6.2.2 Key Personnel

Provide key personnel who are regularly and professionally engaged in the business of the application, installation and testing of the specified telecommunications systems and equipment. There may be one key person or more key persons proposed for this solicitation depending upon how many of the key roles each has successfully provided. Each of the key personnel shall demonstrate experience in providing successful telecommunications systems within the past 3 years.

Supervisors and installers assigned to the installation of this system or any of its components shall be Building Industry Consulting Services International (BICSI) Registered Cabling Installers, Technician Level. Submit documentation of current BICSI certification for each of the key personnel.

In lieu of BICSI certification, supervisors and installers assigned to the installation of this system or any of its components shall have a minimum of 3 years experience in the installation of the specified copper and fiber optic cable and components. They shall have factory or factory approved certification from each equipment manufacturer indicating that they are qualified to install and test the provided products. Submit documentation for a minimum of three and a maximum of five successful telecommunication system installations for each of the key personnel. Documentation for each key person shall include at least two successful system installations provided that are equivalent in system size and in construction complexity to the telecommunications system proposed for this solicitation. Include specific experience in installing and testing telecommunications systems and provide the names and locations of at least two project installations successfully completed using optical fiber and copper telecommunications cabling systems. All of the existing telecommunications system installations offered by the key persons as

successful experience shall have been in successful full-time service for at least 18 months prior to the issuance date for this solicitation. Provide the name and role of the key person, the title, location, and completed installation date of the referenced project, the referenced project owner point of contact information including name, organization, title, and telephone number, and generally, the referenced project description including system size and construction complexity.

Indicate that all key persons are currently employed by the telecommunications contractor, or have a commitment to the telecommunications contractor to work on this project. All key persons shall be employed by the telecommunications contractor at the date of issuance of this solicitation, or if not, have a commitment to the telecommunications contractor to work on this project by the date that the bid was due to the Contracting Officer.

Note that only the key personnel approved by the Contracting Officer in the successful proposal shall do work on this solicitation's telecommunications system. Key personnel shall function in the same roles in this contract, as they functioned in the offered successful experience. Any substitutions for the telecommunications contractor's key personnel requires approval from The Contracting Officer.

1.6.2.3 Minimum Manufacturer Qualifications

Cabling, equipment and hardware manufacturers shall have a minimum of 3 years experience in the manufacturing, assembly, and factory testing of components which comply with TIA-568.1, TIA-568.2 and TIA-568.3.

1.6.3 Test Plan

Provide a complete and detailed test plan for the telecommunications cabling system including a complete list of test equipment for the components and accessories for each cable type specified, 60 days prior to the proposed test date. Include procedures for certification, validation, and testing.

1.6.4 Regulatory Requirements

In each of the publications referred to herein, consider the advisory provisions to be mandatory, as though the word, "shall" had been substituted for "should" wherever it appears. Interpret references in these publications to the "authority having jurisdiction," or words of similar meaning, to mean the Contracting Officer. Equipment, materials, installation, and workmanship shall be in accordance with the mandatory and advisory provisions of NFPA 70 unless more stringent requirements are specified or indicated.

1.6.5 Standard Products

Provide materials and equipment that are products of manufacturers regularly engaged in the production of such products which are of equal material, design and workmanship. Products shall have been in satisfactory commercial or industrial use for 2 years prior to bid opening. The 2-year period shall include applications of equipment and materials under similar circumstances and of similar size. The product shall have been on sale on the commercial market through advertisements, manufacturers' catalogs, or brochures during the 2-year period. Where two or more items of the same class of equipment are required, these items

shall be products of a single manufacturer; however, the component parts of the item need not be the products of the same manufacturer unless stated in this section.

1.6.5.1 Alternative Qualifications

Products having less than a 2-year field service record will be acceptable if a certified record of satisfactory field operation for not less than 6000 hours, exclusive of the manufacturers' factory or laboratory tests, is furnished.

1.6.5.2 Material and Equipment Manufacturing Date

Products manufactured more than 1 year prior to date of delivery to site shall not be used, unless specified otherwise.

1.7 DELIVERY AND STORAGE

Provide protection from weather, moisture, extreme heat and cold, dirt, dust, and other contaminants for telecommunications cabling and equipment placed in storage.

1.8 ENVIRONMENTAL REQUIREMENTS

Connecting hardware shall be rated for operation under ambient conditions of 32 to 140 degrees F and in the range of 0 to 95 percent relative humidity, noncondensing.

1.9 WARRANTY

The equipment items shall be supported by service organizations which are reasonably convenient to the equipment installation in order to render satisfactory service to the equipment on a regular and emergency basis during the warranty period of the contract.

1.10 MAINTENANCE

1.10.1 Operation and Maintenance Manuals

Commercial off the shelf manuals shall be furnished for operation, installation, configuration, and maintenance of products provided as a part of the telecommunications cabling and pathway system, Data Package 5. Submit operations and maintenance data in accordance with Section 01 78 23 OPERATION AND MAINTENANCE DATA and as specified herein not later than 2 months prior to the date of beneficial occupancy. In addition to requirements of Data Package 5, include the requirements of paragraphs TELECOMMUNICATIONS DRAWINGS, TELECOMMUNICATIONS SPACE DRAWINGS, and RECORD DOCUMENTATION. Ensure that these drawings and documents depict the as-built configuration.

1.10.2 Record Documentation

Provide T5 drawings including documentation on cables and termination hardware in accordance with TIA-606. T5 drawings shall include schedules to show information for cut-overs and cable plant management, patch panel layouts and cover plate assignments, cross-connect information and connecting terminal layout as a minimum. T5 drawings shall be provided on electronic media using Windows based computer cable management software. Provide the following T5 drawing documentation as a minimum:

a. Cables - A record of installed cable shall be provided in accordance with TIA-606. The cable records shall include only the required data fieldsin accordance with TIA-606. Include manufacture date of cable with submittal.

b. Termination Hardware - A record of installed patch panels, cross-connect points, distribution frames, terminating block arrangements and type, and outlets shall be provided in accordance with TIA-606. Documentation shall include the required data fields as a minimum in accordance with TIA-606.

PART 2 PRODUCTS

2.1 COMPONENTS

Components shall be UL or third party certified. Where equipment or materials are specified to conform to industry and technical society reference standards of the organizations, submit proof of such compliance. The label or listing by the specified organization will be acceptable evidence of compliance. In lieu of the label or listing, submit a certificate from an independent testing organization, competent to perform testing, and approved by the Contracting Officer. The certificate shall state that the item has been tested in accordance with the specified organization's test methods and that the item complies with the specified organization's reference standard. Provide a complete system of telecommunications cabling and pathway components using star topology. Provide support structures and pathways, complete with outlets, cables, connecting hardware and telecommunications cabinets/racks. Cabling and interconnecting hardware and components for telecommunications systems shall be UL listed or third party independent testing laboratory certified, and shall comply with NFPA 70 and conform to the requirements specified herein.

2.2 TELECOMMUNICATIONS PATHWAY

Provide telecommunications pathways in accordance with TIA-569 and as specified in Section 26 20 00 INTERIOR DISTRIBUTION SYSTEM. Provide system furniture pathways in accordance with UL 1286.

2.3 TELECOMMUNICATIONS CABLING

Cabling shall be UL listed for the application and shall comply with TIA-568.0, TIA-568.1, TIA-568.2, TIA-568.3 and NFPA 70. Provide a labeling system for cabling as required by TIA-606 and UL 969. Ship cable on reels or in boxes bearing manufacture date for for unshielded twisted pair (UTP) in accordance with ICEA S-90-661 and optical fiber cables in accordance with ICEA S-83-596 for all cable used on this project. Cabling manufactured more than 12 months prior to date of installation shall not be used.

2.3.1 Horizontal Cabling

Provide horizontal cable in compliance with NFPA 70 and performance characteristics in accordance with TIA-568.1.

2.3.1.1 Horizontal Copper

Provide horizontal copper cable, UTP, 100 ohm in accordance with TIA-568.2,

UL 444, ANSI/NEMA WC 66, ICEA S-90-661 . Provide four each individually twisted pair, minimum size 24 AWG conductors, Category 6, with a blue thermoplastic jacket. Cable shall be imprinted with manufacturers name or identifier, flammability rating, gauge of conductor, transmission performance rating (category designation) and length marking at regular intervals in accordance with ICEA S-90-661. Provide plenum (CMP), riser (CMR), or general purpose (CM or CMG) communications rated cabling in accordance with NFPA 70. Substitution of a higher rated cable shall be permitted in accordance with NFPA 70. Cables installed in conduit within and under slabs shall be UL listed and labeled for wet locations in accordance with NFPA 70. Provide residential Category 6 cabling in accordance with TIA-570.

2.3.1.2 Horizontal Optical Fiber

Provide optical fiber horizontal cable in accordance with ICEA S-83-596and TIA-568.3. Cable shall be tight buffered, multimode, 50/125-um diameter laser optimized, OM3. Cable shall be imprinted with manufacturer, flammability rating and fiber count at regular intervals not to exceed 40 inches.

Provide plenum (OFNP), riser (OFNR), or general purpose (OFN or OFNG) rated non-conductive, fiber optic cable in accordance with NFPA 70. Substitution of a higher rated cable shall be permitted in accordance with NFPA 70.Cables installed in conduit within and under slabs be UL listed and labeled for wet locations in accordance with NFPA 70. The cable jacket shall be of single jacket construction with color coding of cordage jacket, fiber, unit, and group in accordance with TIA/EIA-598.

2.3.2 Work Area Cabling

2.3.2.1 Work Area Copper

Provide work area copper cable in accordance with TIA-568.2, with a blue, thermoplastic jacket.

2.3.2.2 Work Area Optical Fiber

Provide optical work area cable in accordance with TIA-568.3.

2.4 TELECOMMUNICATIONS SPACES

Provide connecting hardware and termination equipment in the telecommunications entrance facility and telecommunication equipment room to facilitate installation as shown on design drawings for terminating and cross-connecting permanent cabling. Provide telecommunications interconnecting hardware color coding in accordance with TIA-606.

2.4.1 Backboards

Provide void-free, interior grade A-C plywood 3/4 inch thick 4 by 8 feet . Backboards shall be fire rated by manufacturing process. Fire stamp shall be clearly visible. Paint applied over fire retardant backboard shall be UL 723 fire retardant paint. Provide label including paint manufacturer, date painted, UL listing and name of Installer. When painted, paint label and fire stamp shall be clearly visible. Backboards shall be provided on a minimum of two adjacent walls in the telecommunication spaces.

2.5 TELECOMMUNICATIONS OUTLET/CONNECTOR ASSEMBLIES

2.5.1 Outlet/Connector Copper

Outlet/connectors shall comply with FCC Part 68, TIA-568.1, and TIA-568.2. UTP outlet/connectors shall be UL 1863 listed, non-keyed, 8-pin modular, constructed of high impact rated thermoplastic housing and shall be third party verified and shall comply with TIA-568.2 Category 6 requirements. Outlet/connectors provided for UTP cabling shall meet or exceed the requirements for the cable provided. Outlet/connectors shall be terminated using a Type 110 IDC PC board connector, color-coded for both T568A and T568B wiring. Each outlet/connector shall be wired T568A. UTP outlet/connectors shall comply with TIA-568.2 for 200 mating cycles. UTP outlet/connectors installed in outdoor or marine environments shall be jell-filled type containing an anti-corrosive, memory retaining compound.

2.5.2 Optical Fiber Adapters(Couplers)

Provide optical fiber adapters suitable for duplex LC in accordance with TIA/EIA-604-10 with zirconia ceramic alignment sleeves, as indicated. Provide dust cover for adapters. Optical fiber adapters shall comply with TIA-455-21 for 500 mating cycles.

2.5.3 Optical Fiber Connectors

Provide in accordance with TIA-455-21. Optical fiber connectors shall be duplex LC in accordance with TIA/EIA-604-10 with zirconia ceramic alignment sleeves, ferrule, epoxyless crimp style compatible with 62.5/125 multimode fiber. The connectors shall provide a maximum attenuation of 0.3 dB at 850 nm with less than a 0.2 dB change after 500 mating cycles.

2.5.4 Cover Plates

Telecommunications cover plates shall comply with UL 514C, and TIA-568.1, TIA-568.2, TIA-568.3; flush design constructed of high impact thermoplastic material ivory in color. Provide labeling in accordance with the paragraph LABELING in this section.

2.6 GROUNDING AND BONDING PRODUCTS

Provide in accordance with UL 467, TIA-607, and NFPA 70. Components shall be identified as required by TIA-606. Provide ground rods, bonding conductors, and grounding busbars as specified in Section 26 20 00 INTERIOR DISTRIBUTION SYSTEM.

2.7 FIRESTOPPING MATERIAL

Provide as specified in Section 07 84 00 FIRESTOPPING.

2.8 MANUFACTURER'S NAMEPLATE

Each item of equipment shall have a nameplate bearing the manufacturer's name, address, model number, and serial number securely affixed in a conspicuous place; the nameplate of the distributing agent will not be acceptable.

2.9 FIELD FABRICATED NAMEPLATES

ASTM D709. Provide laminated plastic nameplates for each equipment

enclosure, relay, switch, and device; as specified or as indicated on the drawings. Each nameplate inscription shall identify the function and, when applicable, the position. Nameplates shall be melamine plastic, 0.125 inches thick, white with black center core. Surface shall be matte finish. Corners shall be square. Accurately align lettering and engrave into the core. Minimum size of nameplates shall be one by 2.5 inches. Lettering shall be a minimum of 0.25 inches high normal block style.

2.10 TESTS, INSPECTIONS, AND VERIFICATIONS

2.10.1 Factory Reel Tests

Provide documentation of the testing and verification actions taken by manufacturer to confirm compliance with TIA-568.1, TIA-568.2, TIA-568.3, TIA-526-7 for single mode optical fiber , and TIA-526-14 for multimode optical fiber cables.

PART 3 EXECUTION

3.1 INSTALLATION

Install telecommunications cabling and pathway systems, including the horizontal and backbone cable, pathway systems, telecommunications outlet/connector assemblies, and associated hardware in accordance with NECA/BICSI 568, TIA-568.1, TIA-568.2, TIA-568.3, TIA-569, NFPA 70, and UL standards as applicable. Provide cabling in a star topology network. Provide residential cabling in a star wiring architecture from the distribution device as required by TIA-570. Pathways and outlet boxes shall be installed as specified in Section 26 20 00 INTERIOR DISTRIBUTION SYSTEM. Install telecommunications cabling with copper media in accordance with the following criteria to avoid potential electromagnetic interference between power and telecommunications equipment. The interference ceiling shall not exceed 3.0 volts per meter measured over the usable bandwidth of the telecommunications cabling. Cabling shall be run with horizontal and vertical cable guides in telecommunications spaces with terminating hardware and interconnection equipment.

3.1.1 Cabling

Install optical fiber telecommunications cabling system as detailed in TIA-568.1, TIA-568.3. Screw terminals shall not be used except where specifically indicated on plans. Use an approved insulation displacement connection (IDC) tool kit for copper cable terminations. Do not exceed manufacturers' cable pull tensions for copper and optical fiber cables. Provide a device to monitor cable pull tensions. Do not exceed 25 pounds pull tension for four pair copper cables. Do not chafe or damage outer jacket materials. Use only lubricants approved by cable manufacturer. Do not over cinch cables, or crush cables with staples. For UTP cable, bend radii shall not be less than four times the cable diameter. Cables shall be terminated; no cable shall contain unterminated elements. Cables shall not be spliced. Label cabling in accordance with paragraph LABELING in this section.

3.1.1.1 Backbone Cable

a. Copper Backbone Cable. Install intrabuilding backbone copper cable, in indicated pathways, between the campus distributor, located in the telecommunications entrance facility or room, the building distributors and the floor distributors located in telecommunications

rooms and telecommunications equipment rooms as indicated on drawings.

b. Optical fiber Backbone Cable. Install intrabuilding backbone optical fiber in indicated pathways. Do not exceed manufacturer's recommended bending radii and pull tension. Prepare cable for pulling by cutting outer jacket 10 inches leaving strength members exposed for approximately 10 inches. Twist strength members together and attach to pulling eye. Vertical cable support intervals shall be in accordance with manufacturer's recommendations.

3.1.1.2 Horizontal Cabling

Install horizontal cabling as indicated on drawings Do not untwist Category 6 UTP cables more than one half inch from the point of termination to maintain cable geometry. Provide slack cable in the form of a figure eight (not a service loop) on each end of the cable, 10 feet in the telecommunications room, and 12 inches in the work area outlet.

3.1.2 Pathway Installations

Provide in accordance with TIA-569 and NFPA 70. Provide building pathway as specified in Section 26 20 00 INTERIOR DISTRIBUTION SYSTEM.

3.1.3 Cable Tray Installation

Install cable tray as specified in Section 26 20 00 INTERIOR DISTRIBUTION SYSTEM. Only CMP and OFNP type cable shall be installed in a plenum.

3.1.4 Work Area Outlets

3.1.4.1 Terminations

Terminate UTP cable in accordance with TIA-568.1, TIA-568.2 and wiring configuration as specified. Terminate fiber optic cables in accordance with TIA-568.3.

3.1.4.2 Cover Plates

As a minimum, each outlet/connector shall be labeled as to its function and a unique number to identify cable link in accordance with the paragraph LABELING in this section.

3.1.4.3 Cables

Unshielded twisted pair and fiber optic cables shall have a minimum of 12 inches of slack cable loosely coiled into the telecommunications outlet boxes. Minimum manufacturer's bend radius for each type of cable shall not be exceeded.

3.1.4.4 Pull Cords

Pull cords shall be installed in conduit serving telecommunications outlets that do not have cable installed.

3.1.5 Telecommunications Space Termination

Install termination hardware required for Category 6 and optical fiber system. An insulation displacement tool shall be used for terminating copper cable to insulation displacement connectors.

3.1.5.1 Connector Blocks

Connector blocks shall be cabinet mounted in orderly rows and columns. Adequate vertical and horizontal wire routing areas shall be provided between groups of blocks. Install in accordance with industry standard wire routing guides in accordance with TIA-569.

3.1.5.2 Patch Panels

Patch panels shall be mounted in equipment cabinets with sufficient ports to accommodate the installed cable plant plus 25 percent spares.

a. Copper Patch Panel. Copper cable entering a patch panel shall be secured to the panel with cable ties to prevent movement of the cable.

b. Fiber Optic Patch Panel. Fiber optic cable loop shall be 3 feet in length. The outer jacket of each cable entering a patch panel shall be secured to the panel to prevent movement of the fibers within the panel, using clamps or brackets specifically manufactured for that purpose.

3.1.6 Electrical Penetrations

Seal openings around electrical penetrations through fire resistance-rated wall, partitions, floors, or ceilings as specified in Section 07 84 00 FIRESTOPPING.

3.1.7 Grounding and Bonding

Provide in accordance with TIA-607, NFPA 70 and as specified in Section 26 20 00 INTERIOR DISTRIBUTION SYSTEM.

3.2 LABELING

3.2.1 Labels

Provide labeling in accordance with TIA-606. Handwritten labeling is unacceptable. Stenciled lettering for voice and data circuits shall be provided using thermal ink transfer process .

3.2.2 Cable

Cables shall be labeled using color labels on both ends with identifiers in accordance with TIA-606.

3.2.3 Termination Hardware

Workstation outlets and patch panel connections shall be labeled using color coded labels with identifiers in accordance with TIA-606.

3.3 FIELD APPLIED PAINTING

Paint electrical equipment as required to match finish of adjacent surfaces or to meet the indicated or specified safety criteria. Painting shall be as specified in Section 09 90 00 PAINTS AND COATINGS.

3.3.1 Painting Backboards

If backboards are required to be painted, then the manufactured fire retardant backboard must be painted with fire retardant paint, so as not to increase flame spread and smoke density and must be appropriately labeled. Label and fire rating stamp must be unpainted.

3.4 FIELD FABRICATED NAMEPLATE MOUNTING

Provide number, location, and letter designation of nameplates as indicated. Fasten nameplates to the device with a minimum of two sheet-metal screws or two rivets.

3.5 TESTING

3.5.1 Telecommunications Cabling Testing

Perform telecommunications cabling inspection, verification, and performance tests in accordance with TIA-568.1, TIA-568.2, TIA-568.3. Test equipment shall conform to TIA-1152. Perform optical fiber field inspection tests via attenuation measurements on factory reels and provide results along with manufacturer certification for factory reel tests. Remove failed cable reels from project site upon attenuation test failure.

3.5.1.1 Inspection

Visually inspect UTP and optical fiber jacket materials for UL or third party certification markings. Inspect cabling terminations in telecommunications rooms and at workstations to confirm color code for T568A or T568B pin assignments, and inspect cabling connections to confirm compliance with TIA-568.1, TIA-568.2, TIA-568.3, and TIA-570 for residential cabling. Visually confirm Category 6, marking of outlets, cover plates, outlet/connectors, and patch panels.

3.5.1.2 Verification Tests

UTP backbone copper cabling shall be tested for DC loop resistance, shorts, opens, intermittent faults, and polarity between conductors, and between conductors and shield, if cable has overall shield. Test operation of shorting bars in connection blocks. Test cables after termination but prior to being cross-connected.

For multimode optical fiber, perform optical fiber end-to-end attenuation tests in accordance with TIA-568.3 and TIA-526-14 using Method A, Optical Power Meter and Light Source for multimode optical fiber. Perform verification acceptance tests.

3.5.1.3 Performance Tests

Perform testing for each outlet and MUTOA as follows:

a. Perform Category 6 link tests in accordance with TIA-568.1 and TIA-568.2. Tests shall include wire map, length, insertion loss, NEXT, PSNEXT, ELFEXT, PSELFEXT, return loss, propagation delay, and delay skew.

b. Optical fiber Links. Perform optical fiber end-to-end link tests in accordance with TIA-568.3.

3.5.1.4 Final Verification Tests

Perform verification tests for UTP and optical fiber systems after the complete telecommunications cabling and workstation outlet/connectors are installed.

a. Data Tests. These tests assume the Information Technology Staff has a network installed and are available to assist with testing. Connect to the network interface device at the demarcation point. Log onto the network to ensure proper connection to the network.

-- End of Section --

This page was intentionally left blank for duplex printing.

SECTION TABLE OF CONTENTS

DIVISION 28 - ELECTRONIC SAFETY AND SECURITY

SECTION 28 31 60

INTERIOR FIRE ALARM SYSTEM, NON-ADDRESSABLE

PART 1 GENERAL

1.1 REFERENCES
1.2 RELATED SECTIONS
1.3 SUMMARY
1.3.1 Scope
1.4 DEFINITIONS
1.4.1 Terminal Cabinet
1.4.2 Designated Fire Protection Engineer (DFPE)
1.4.3 Qualified Fire Protection Engineer (QFPE)
1.5 SUBMITTALS
1.6 SYSTEM OPERATION
1.6.1 Alarm Initiating Devices and Notification Appliances (Visual, Audible)
1.6.2 Functions and Operating Features
1.7 EXISTING EQUIPMENT
1.8 QUALITY ASSURANCE
1.8.1 Submittal Documents
1.8.1.1 Preconstruction Submittals
1.8.1.2 Shop Drawings
1.8.1.3 Nameplates
1.8.1.4 Wiring Diagrams
1.8.1.5 System Layout
1.8.1.6 Notification Appliances
1.8.1.7 Product Data
1.8.1.8 As-Built Drawings
1.8.2 Qualifications
1.8.2.1 Fire Alarm System Designer
1.8.2.2 Installer
1.8.2.3 Manufacturer
1.8.3 Regulatory Requirements
1.9 DELIVERY, STORAGE, AND HANDLING
1.10 MAINTENANCE
1.10.1 Spare Parts

PART 2 PRODUCTS

2.1 GENERAL PRODUCT REQUIREMENT
2.2 MATERIALS AND EQUIPMENT
2.2.1 Standard Products
2.3 NOTIFICATION APPLIANCES
2.3.1 Audible Notification Appliances
2.3.1.1 Horns
2.3.2 Visual Notification Appliances
2.4 WIRING
2.4.1 Alarm Wiring

PART 3 EXECUTION

3.1 VERIFYING ACTUAL FIELD CONDITIONS
3.2 INSTALLATION
3.2.1 Notification Appliances
3.3 SYSTEM FIELD WIRING
3.3.1 Wiring within Cabinets, Enclosures, and Boxes
3.3.2 Back Boxes and Conduit
3.3.3 Conductor Terminations
3.4 FIRESTOPPING
3.5 PAINTING
3.6 FIELD QUALITY CONTROL
3.6.1 Test Procedures
3.6.2 Correction of Deficiencies
3.6.3 Government Final Tests
3.7 MINIMUM SYSTEM TESTS
3.7.1 System Tests
3.7.2 Audibility Tests
3.8 SYSTEM ACCEPTANCE
3.9 EXTRA MATERIALS
3.9.1 Repair Service/Replacement Parts
3.9.2 Spare Parts

-- End of Section Table of Contents --

SECTION 28 31 60

INTERIOR FIRE ALARM SYSTEM, NON-ADDRESSABLE

PART 1 GENERAL

1.1 REFERENCES

The publications listed below form a part of this specification to the extent referenced. The publications are referred to within the text by the basic designation only.

FM GLOBAL (FM)

FM APP GUIDE	(updated on-line) Approval Guide https://www.approvalguide.com/

NATIONAL FIRE PROTECTION ASSOCIATION (NFPA)

NFPA 4	(2018) Standard for Integrated Fire Protection and Life Safety System Testing
NFPA 70	(2023; ERTA 1 2024; TIA 24-1) National Electrical Code
NFPA 72	(2022; ERTA 22-1) National Fire Alarm and Signaling Code
NFPA 170	(2024; ERTA 1 2023) Standard for Fire Safety and Emergency Symbols

U.S. DEPARTMENT OF DEFENSE (DOD)

UFC 4-010-06	(2023) Cybersecurity of Facility-Related Control Systems

UL SOLUTIONS (UL)

UL 464	(2023) UL Standard for Safety Audible Signaling Devices for Fire Alarm and Signaling Systems, Including Accessories
UL 1638	(2023) UL Standard for Safety Visible Signaling Devices for Fire Alarm and Signaling Systems, Including Accessories
UL 1971	(2002; Reprint Feb 2024) UL Standard for Safety Signaling Devices for the Deaf and Hard of Hearing
UL Fire Prot Dir	UL Product IQ (updated online) at https://productiq.ulpropsector.com/en

1.2 RELATED SECTIONS

Section 25 05 11 CYBERSECURITY FOR FACILITY-RELATED CONTROL SYSTEMS,

applies to this section, with the additions and modifications specified herein.

1.3 SUMMARY

1.3.1 Scope

a. This work includes designing and modifying the existing fire alarm system as described herein and on the contract drawings. Include system wiring, raceways, pull boxes, terminal cabinets, outlet and mounting boxes, notification appliances, and other accessories and miscellaneous items required for a complete operational system even though each item is not specifically mentioned or described. Provide system complete and ready for operation. Existing interior fire alarm system is a Kidde-Fenwal FN6000 panel. Design and installation must comply withUFC 4-010-06.

b. Provide equipment, materials, installation, workmanship, inspection, and testing in strict accordance with NFPA 72, except as modified herein. The system layout on the drawings show the intent of coverage and suggested locations. Final quantity, system layout, and coordination are the responsibility of the Contractor.

1.4 DEFINITIONS

Wherever mentioned in this specification or on the drawings, the equipment, devices, and functions must be defined as follows:

1.4.1 Terminal Cabinet

A steel cabinet with locking, hinge-mounted door where terminal strips are securely mounted inside the cabinet.

1.4.2 Designated Fire Protection Engineer (DFPE)

The DoD fire protection engineer that oversees that Area of Responsibility for that project. This is sometimes referred to as the "cognizant" fire protection engineer. Interpret reference to "authority having jurisdiction" and/or AHJ in referenced standards to mean the Designated Fire Protection Engineer (DFPE). The DFPE may be responsible for review of the contractor submittals having a "G" designation, and for witnessing final inspection and testing.

1.4.3 Qualified Fire Protection Engineer (QFPE)

A QFPE is an individual who is a licensed professional engineer (P.E.), who has passed the fire protection engineering written examination administered by the National Council of Examiners for Engineering and Surveying (NCEES) and has relevant fire protection engineering experience.

1.5 SUBMITTALS

Government approval is required for submittals with a "G" or "S" classification. Submittals not having a "G" or "S" classification are for information only. When used, a code following the "G" classification identifies the office that will review the submittal for the Government.

Shop drawings (SD-02), product data (SD-03) and calculations (SD-05) must be prepared by the fire alarm designer and combined and submitted as one complete package. The QFPE must review the SD-02/SD-03/SD-05 submittal package for completeness and compliance with the Contract provisions prior to submission to the Government. The QFPE must provide a Letter of Confirmation that they have reviewed the submittal package for compliance with the contract provisions. This letter must include their registered professional engineer stamp and signature. Partial submittals and submittals not reviewed by the QFPE will be returned by the Government disapproved without review.

Submit the following in accordance with Section 01 33 00 SUBMITTAL PROCEDURES:

SD-01 Preconstruction SubmittalsInstaller; G

SD-02 Shop Drawings

Wiring Diagrams; G

System Layout; G

Notification Appliances; G

Initiating devices; G, AO

SD-03 Product Data

Notification Appliances; G

Alarm Wiring; G

SD-06 Test Reports

Test Procedures; G

SD-07 Certificates

Verification of Compliant Installation; G

Request for Government Final Test; G

SD-11 Closeout Submittals

As-Built Drawings

1.6 SYSTEM OPERATION

Fire alarm system components requiring power, except for the FACU(s) power supply, must operate on 24 volts DC unless noted otherwise in this section.

1.6.1 Alarm Initiating Devices and Notification Appliances (Visual, Audible)

a. Connect notification appliances to notification appliance circuits (NAC) Class "B".

1.6.2 Functions and Operating Features

The system must provide the following functions and operating features:

a. Power, annunciation, supervision, and control for the system.

b. Visual alarm notification appliances must be synchronized as required by NFPA 72.

c. An audible and visual trouble signal to activate upon a single break or open condition, or ground fault. The trouble signal must also operate upon loss of primary power (AC) supply, absence of a battery supply, low battery voltage, or removal of alarm or supervisory control unit modules. After the system returns to normal operating conditions, the trouble signal must again sound until the trouble is acknowledged.

d. Alarm functions must override trouble or supervisory functions. Supervisory functions must override trouble functions.e. An alarm signal must automatically initiate the following functions:

1.7 EXISTING EQUIPMENT

a. Equipment and devices must be compatible and operable with the existing fire alarm\mass notification system and must not impair reliability or operational functions of existing supervising station fire alarm system.

1.8 QUALITY ASSURANCE

1.8.1 Submittal Documents

1.8.1.1 Preconstruction Submittals

Within 36 days of contract award but not less than 14 days prior to commencing any work on site, the Contractor must submit the following for review and approval. SD-02, SD-03 and SD-05 submittals received prior to the review and approval of the qualifications of the fire alarm subcontractor and QFPE must be returned disapproved without review. All resultant delays must be the sole responsibility of the Contractor.

1.8.1.2 Shop Drawings

Shop drawings must not be smaller than the Contract Drawings. Drawings must comply with the requirements of NFPA 72 and NFPA 170. Minimum scale for floor plans must be 1/8"=1'.

1.8.1.3 Nameplates

Nameplate illustrations and data to obtain approval by the Contracting Officer before installation.

1.8.1.4 Wiring Diagrams

Two copies of point-to-point wiring diagrams showing the points of connection and terminals used for electrical field connections in the system, including interconnections between the equipment or systems that

are supervised or controlled by the system. Diagrams must show connections from field devices to the FACU and remote FACU, initiating circuits, switches, relays and terminals, including pathway diagrams between the control unit and shared communications equipment within the protected premises. Point-to-point wiring diagrams must be job specific and must not indicate connections or circuits not being utilized. Provide complete riser diagrams indicating the wiring sequence of all devices and their connections to the control equipment. Include a color-code schedule for the wiring.

1.8.1.5 System Layout

Two copies of plan view drawing showing device locations, terminal cabinet locations, junction boxes, other related equipment, conduit routing, conduit sizes, wire counts, conduit fill calculations, wire color-coding, circuit identification in each conduit, and circuit layouts for all floors. Indicate candela rating of each visual notification appliance. Indicate the addresses of all devices, modules, relays, and similar. Indicate if the environment for the FACU is within its environmental listing (e.g. temperature/humidity).

Provide a complete description of the system operation in matrix format similar to the "Typical Input/Output Matrix" included in the Annex of NFPA 72.

1.8.1.6 Notification Appliances

Calculations and supporting data on each circuit to indicate that there is at least 25 percent spare capacity for notification appliances. Annotate data for each circuit on the drawings.

1.8.1.7 Product Data

Two copies of annotated descriptive data to show the specific model, type, and size of each item. Catalog cuts must also indicate the NRTL listing. The data must be highlighted to show model, size, and options that are intended for consideration. Data must be adequate to demonstrate compliance with all contract requirements. Product data for all equipment must be combined into a single submittal.

Provide an equipment list identifying the type, quantity, make, and model number of each piece of equipment to be provided under this submittal. The equipment list must include the type, quantity, make and model of spare equipment. Types and quantities of equipment submitted must coincide with the types and quantities of equipment used in the battery calculations and those shown on the shop drawings.

1.8.1.8 As-Built Drawings

The drawings must show the system as installed, including deviations from both the project drawings and the approved shop drawings. These drawings must be submitted within two weeks after the final Government test of the system. At least one set of the as-built (marked-up) drawings must be provided at the time of, or prior to the final Government test.

1.8.2 Qualifications

1.8.2.1 Fire Alarm System Designer

The fire alarm system designer must be certified as a Level III (minimum) Technician by National Institute for Certification in Engineering Technologies (NICET) in the Fire Alarm Systems subfield of Fire Protection Engineering Technology or meet the qualifications for a QFPE.

1.8.2.2 Installer

Fire alarm installer with a minimum of two years of experience utilized to assist in the installation of fire alarm devices, cabinets and control units. A licensed electrician must be allowed to install wire, cable, conduit and backboxes for the fire alarm system system. The fire alarm installer must be factory trained in the installation, adjustment, testing, and operation of the equipment specified herein and on the drawings.

1.8.2.3 Manufacturer

Components must be of current design and must be in regular and recurrent production at the time of installation. Provide design, materials, and devices for a protected premises fire alarm system, complete, conforming to NFPA 72, except as specified herein.

1.8.3 Regulatory Requirements

Equipment and material must be listed or approved. Listed or approved, as used in this Section, means listed, labeled or approved by a Nationally Recognized Testing Laboratory (NRTL) such as UL Fire Prot Dir or FM APP GUIDE. The omission of these terms under the description of any item of equipment described must not be construed as waiving this requirement. All listings or approvals by testing laboratories must be from an existing ANSI or UL published standard. The recommended practices stated in the manufacturer's literature or documentation must be considered as mandatory requirements.

1.9 DELIVERY, STORAGE, AND HANDLING

Protect equipment delivered and placed in storage from the weather, humidity, and temperature variation, dirt and dust, and other contaminants.

1.10 MAINTENANCE

1.10.1 Spare Parts

Furnish the following spare parts in the manufacturers original unopened containers:

a. One of each type of audible and visual alarm device installed.

PART 2 PRODUCTS

2.1 GENERAL PRODUCT REQUIREMENT

All fire alarm equipment must be listed for use under the applicable reference standards.

2.2 MATERIALS AND EQUIPMENT

2.2.1 Standard Products

Provide materials, equipment, and devices that have been tested by a nationally recognized testing laboratory and listed for fire protection service when so required by NFPA 72 or this specification. Select material from one manufacturer, where possible, and not a combination of manufacturers, for any particular classification of materials. Material and equipment must be the standard products of a manufacturer regularly engaged in the manufacture of the products for at least 2 years prior to bid opening.

2.3 NOTIFICATION APPLIANCES

2.3.1 Audible Notification Appliances

Audible appliances must conform to the applicable requirements of UL 464. Appliances must be connected into notification appliance circuits. Surface mounted audible appliances must be painted red.

2.3.1.1 Horns

Horns must be semi-flush mounted. Horns must produce a sound rating of at least 85 dBA at 10 feet. Horns used in exterior locations must be specifically listed or approved for outdoor use and be provided with metal housing and protective grilles.

2.3.2 Visual Notification Appliances

Visual notification appliances must conform to the applicable requirements of UL 1638, UL 1971 and conform to the Architectural Barriers Act (ABA). Visual Notification Appliances must have clear high intensity optic lens, xenon flash tubes, or light emitting diode (LED) and be marked "Alert" in letters of contrasting color. The light pattern must be disbursed so that it is visible above and below the strobe and from a 90 degree angle on both sides of the strobe. Strobe flash rate must be 1 flash per second and a minimum of 30 candela based on the UL 1971 test. Strobe must be surface mounted.

2.4 WIRING

Provide wiring materials under this section as specified in Section 26 20 00 INTERIOR DISTRIBUTION SYSTEM with the additions and modifications specified herein.

2.4.1 Alarm Wiring

IDC wiring must be solid copper cable in accordance with the manufacturers requirements. Visual notification appliance circuit conductors, that contain audible alarm appliances, must be copper No. 14 AWG size conductors at a minimum. Wire size must be sufficient to prevent voltage drop problems. Circuits operating at 24 VDC must not operate at less than the listed voltages for the detectors and/or appliances. Power wiring, operating at 120 VAC minimum, must be a minimum No. 12 AWG solid copper having similar insulation. Acceptable power-limited cables are FPL, FPLR or FPLP as appropriate with red colored covering. Nonpower-limited cables must comply with NFPA 70.

PART 3 EXECUTION

3.1 VERIFYING ACTUAL FIELD CONDITIONS

Before commencing work, examine all adjoining work on which the contractor's work is in any way dependent for perfect workmanship according to the intent of this specification section, and report to the Contracting Officer's Representative any condition which prevents performance of first class work. No "waiver of responsibility" for incomplete, inadequate or defective adjoining work will be considered unless notice has been filed before submittal of a proposal.

3.2 INSTALLATION

3.2.1 Notification Appliances

a. Locate notification appliance devices as required by NFPA 72. Where more than two visual notification appliances are located in the same room or corridor or field of view, provide synchronized operation. Devices must use screw terminals for all field wiring.

3.3 SYSTEM FIELD WIRING

3.3.1 Wiring within Cabinets, Enclosures, and Boxes

Provide wiring installed in a neat and professional manner and installed parallel with or at right angles to the sides and back of any box, enclosure, or cabinet. Conductors that are terminated, spliced, or otherwise interrupted in any enclosure, cabinet, mounting, or junction box must be connected to screw-type terminal blocks. Mark each terminal in accordance with the wiring diagrams of the system. The use of wire nuts or similar devices is prohibited. Wiring to conform with NFPA 70.

Indicate the following in the wiring diagrams:

a. Point-to-point wiring diagrams showing the points of connection and terminals used for electrical field connections in the system, including interconnections between the equipment or systems that are supervised or controlled by the system. Diagrams must show connections from field devices to the FACU and remote fire alarm control units, initiating circuits, switches, relays and terminals.

3.3.2 Back Boxes and Conduit

In addition to the requirements of Section 26 20 00 INTERIOR DISTRIBUTION SYSTEM, provide all wiring in rigid metal conduit or intermediate metal conduit unless specifically indicated otherwise. Minimum conduit size must be 3/4-inch in diameter. Do not use electrical non-metallic tubing (ENT) or flexible non-metallic tubing and associated fittings.

a. Galvanized rigid steel (GRS) conduit must be utilized where exposed to weather, where subject to physical damage, and where exposed on exterior of buildings. Intermediate metal conduit (IMC) may be used in lieu of GRS as allowed by NFPA 70.

b. Electrical metallic tubing (EMT) is permitted above suspended ceilings or exposed where not subject to physical damage. Do not use EMT underground, encased in concrete, mortar, or grout, in hazardous locations, where exposed to physical damage, outdoors or in fire pump

rooms. Use die-cast compression connectors.

c. For rigid metallic conduit (RMC), only threaded type fitting are permitted for wet or damp locations.

d. Flexible metal conduit is permitted for initiating device circuits 6 feet in length or less. Flexible metal conduit is prohibited for notification appliance circuits and signaling line circuits. Use liquid tight flexible metal conduit in damp and wet locations.

e. Schedule 40 (minimum) polyvinyl chloride (PVC) is permitted where conduit is routed underground or underground below floor slabs. Convert non-metallic conduit, other than PVC Schedule 40 or 80, to plastic-coated rigid, or IMC, steel conduit before turning up through floor slab.

f. Exterior wall penetrations must be weathertight. Conduit must be sealed to prevent the infiltration of moisture.

g. g. For Class "A" or "X" circuits with conductor lengths of 10 feet or less, the conductors must be permitted to be installed in the same raceway in accordance with NFPA 72.

3.3.3 Conductor Terminations

Labeling of conductors at terminal blocks in terminal cabinets, FACU, and remote FACU must be provided at each conductor connection. Each conductor or cable must have a shrink-wrap label to provide a unique and specific designation. Each terminal cabinet, FACU, and remote FACU must contain a laminated drawing that indicates each conductor, its label, circuit, and terminal. The laminated drawing must be neat, using 12 point lettering minimum size, and mounted within each cabinet, control unit, or unit so that it does not interfere with the wiring or terminals. Maintain existing color code scheme where connecting to existing equipment.

3.4 FIRESTOPPING

Provide firestopping for holes at conduit penetrations through floor slabs, fire-rated walls, partitions with fire-rated doors, corridor walls, and vertical service shafts in accordance with Section 07 84 00 FIRESTOPPING.

3.5 PAINTING

a. In unfinished areas (including areas above drop ceilings), paint all exposed electrical conduit (serving fire alarm equipment), fire alarm conduit, surface metal raceway, junction boxes and covers red. In lieu of painting conduit, the contractor may utilize red conduit with a factory applied finish.

b. In finished areas, paint exposed electrical conduit (serving fire alarm equipment), fire alarm conduit, surface metal raceways, junction boxes, and electrical boxes to match adjacent finishes. The inside cover of the junction box must be identified as "Fire Alarm" and the conduit must have painted red bands 3/4-inch wide at 10-foot centers and at each side of a floor, wall, or ceiling penetration.

c. Painting must comply with Section 09 90 00 PAINTS AND COATINGS.

3.6 FIELD QUALITY CONTROL

3.6.1 Test Procedures

Submit detailed test procedures, prepared and signed by the NICET Level III Fire Alarm Technician, and the representative of the installing company, 60 days prior to performing system tests. Detailed test procedures must list all components of the installed system such as initiating devices and circuits, notification appliances and circuits, control devices/equipment, batteries, transmitting and receiving equipment, power sources/supply, annunciators, special hazard equipment, emergency communication equipment, interface equipment, and surge protective devices. Test procedures must include sequence of testing, time estimate for each test, and sample test data forms. The test data forms must be in a check-off format (pass/fail with space to add applicable test data; similar to the forma in NFPA 72 and NFPA 4.) The test procedures and accompanying test data forms must be used for the pre-Government testing and the Government testing. The test data forms must record the test results and must:

a. Identify the NFPA Class of all Initiating Device Circuits (IDC), and Notification Appliance Circuits (NAC).

b. Identify each test required by NFPA 72 Test Methods and required test herein to be performed on each component, and describe how these tests must be performed.

c. Identify each component and circuit as to type, location within the facility, and unique identity within the installed system. Provide necessary floor plan sheets showing each component location, test location, and alphanumeric identity.

d. Identify all test equipment and personnel required to perform each test (including equipment necessary for smoke detector testing. The use of magnets is not permitted.

e. Provide space to identify the date and time of each test. Provide space to identify the names and signatures of the individuals conducting and witnessing each test.

3.6.2 Correction of Deficiencies

If equipment was found to be defective or non-compliant with contract requirements, perform corrective actions and repeat the tests. Tests must be conducted and repeated if necessary until the system has been demonstrated to comply with all contract requirements.

3.6.3 Government Final Tests

The tests must be performed in accordance with the approved test procedures in the presence of the DFPE. Furnish instruments and personnel required for the tests. The following must be provided at the job site for Government Final Testing:

a. The manufacturer's technical representative.

b. Marked-up red line drawings of the system as actually installed.

c. Copy of test procedures and completed test data forms.

d. Audibility test results with marked-up floor plans.

Government Final Tests will be witnessed by the Contracting Officer's Representative (COR). At this time, any and all required tests noted in the paragraph "Minimum System Tests" must be repeated at their discretion.

3.7 MINIMUM SYSTEM TESTS

3.7.1 System Tests

Test the system in accordance with the procedures outlined in NFPA 72. The required tests are as follows:

a. Test each initiating device and notification appliance and circuit for proper operation and response at the control unit. Smoke detectors must be tested in accordance with manufacturer's recommended calibrated test method. Use of magnets is prohibited. Testing of duct smoke detectors must comply with the requirements of NFPA 72 except disconnect at least 20 percent of devices. If there is a failure at these devices, then supervision must be tested at each device.

b. Visually inspect wiring.c. Verify that red-line drawings are accurate. d. Measure voltage readings for circuits to ensure that voltage drop is not excessive.

e. Measure the voltage drop at the most remote appliance (based on wire length) on each notification appliance circuit.

3.7.2 Audibility Tests

Sound pressure levels from audible notification appliances must be a minimum of 15 dBa over ambient with a maximum of 110 dBa in any occupiable area. The provisions for audible notification (audibility and intelligibility) must be met with doors, fire shutters, movable partitions, and similar devices closed.

3.8 SYSTEM ACCEPTANCE

Following acceptance of the system, as-built drawings must be delivered to the Contracting Officer for review and acceptance. The drawings must show the system as installed, including deviations from both the project drawings and the approved shop drawings. These drawings must be submitted within two weeks after the final Government test of the system. At least one set of as-built (marked-up) drawings must be provided at the time of, or prior to the Final Government Test.

a. The drawings must be prepared electronically and sized no less than the contract drawings.

b. Include complete wiring diagrams showing connections between devices and equipment, both factory and field wired.

c. Include a riser diagram and drawings showing the as-built location of devices and equipment.

3.9 EXTRA MATERIALS

3.9.1 Repair Service/Replacement Parts

Repair services and replacement parts for the system must be available for a period of 10 years after the date of final acceptance of this work by the Contracting Officer. During the warranty period, the service technician must be on-site within 24 hours after notification. All repairs must be completed within 24 hours of arrival on-site.

During the warranty period, the installing fire alarm contractor is responsible for conducting all required testing and maintenance in accordance with the requirements and recommended practices of NFPA 72 and the system manufacturer. Installing fire alarm contractor is NOT responsible for any damage resulting from abuse, misuse, or neglect of equipment by the end user.

3.9.2 Spare Parts

Spare parts furnished must be directly interchangeable with the corresponding components of the installed system. Spare parts must be suitably packaged and identified by nameplate, tagging, or stamping. Spare parts must be delivered to the Contracting Officer at the time of the Government testing and must be accompanied by an inventory list.

-- End of Section --

APPENDIX A:

EXISTING ELECTRICAL SYSTEM DRAWINGS

This page was intentionally left blank for duplex printing.

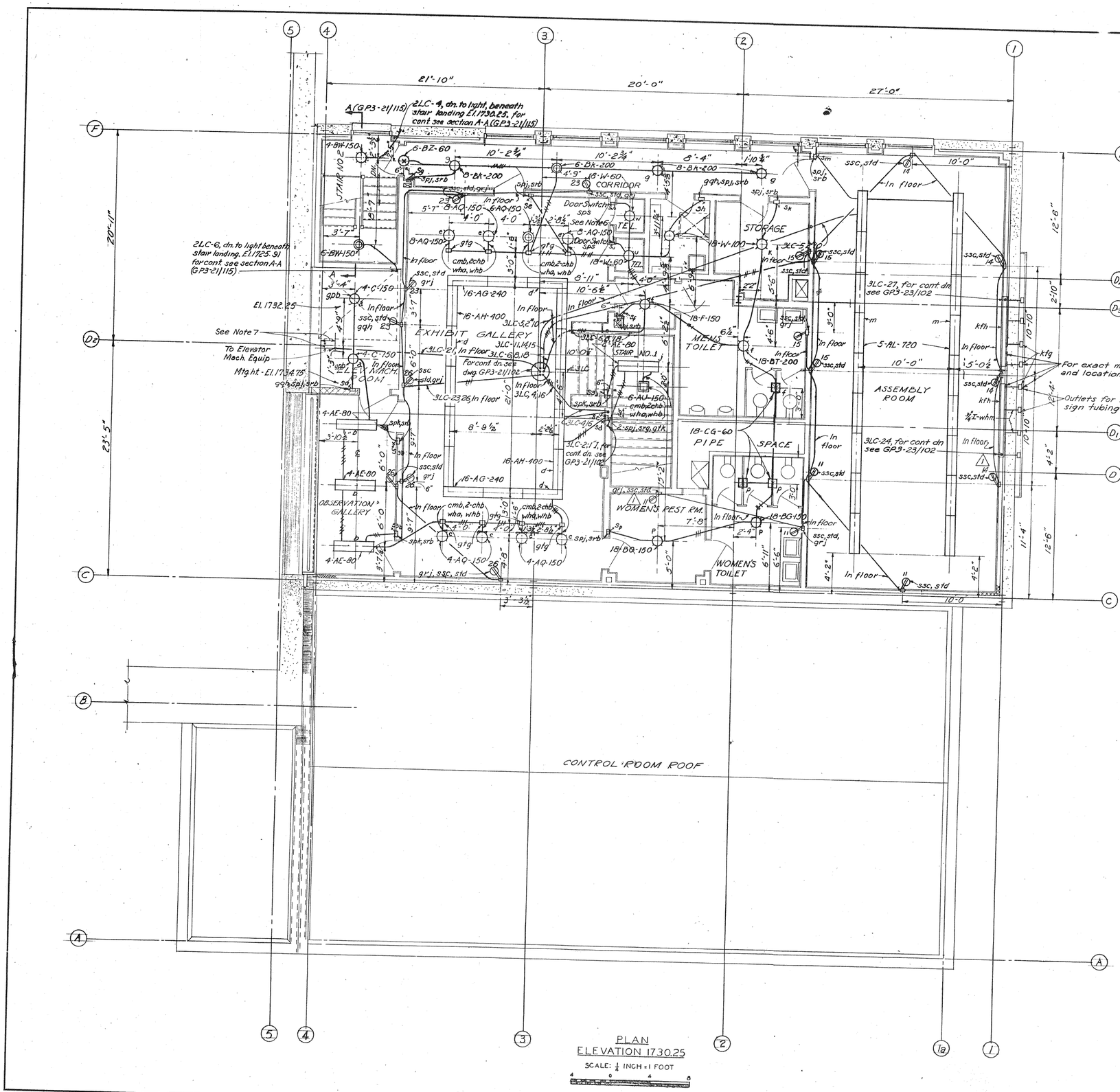

PLAN
ELEVATION 1730.25
SCALE: 1/4 INCH = 1 FOOT

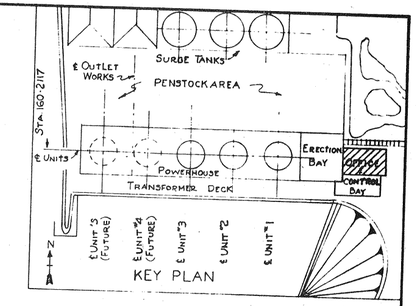

FIXTURE TYPE	MOUNTING HEIGHT	BIM MARK
C	10'-0" above El.1732.25	sbn, smb
F	Box mt'd. ceiling	sbp
W	Box mt'd ceiling	sch
AE	Flush mt'd ceiling	sfc
AG	Flush mt'd ceiling	sfk
AH	Flush mt'd ceiling	sfm
AL	Flush mt'd ceiling	sfn
AQ	Flush mt'd ceiling	scx
AU	Flush mt'd ceiling	sca
BZ	1'-0" above top of door	scr
BG	Ltg. fixture provided with vent equipment	
BK	Box mt'd ceiling	scn
BT	Ltg. fixture provided with vent equipment	
BW	Box mt'd ceiling	scy
CG	Flush mt'd. ceiling	sdg

LEGEND

- ▢ Emergency accent light
- ⊗ Exit light

NOTES:

1. For general notes and payment items see GP3-21/108.
2. For explanation of electrical symbols see GP3-20/117.
3. Unless otherwise noted, use 4" square outlet box (gqm) and 3/4" raised cover, (grp), for receptacles and switches.
4. Outlet boxes for all lighting fixtures on the drawing are Universal No. 54171-3/4, (gpt), or equal, unless otherwise noted.
5. For Bill of Material items, see BM-GP3-21/101.
6. Mount door switches, sps, 2'-6" above finished floor.
7. Final location to be determined in the field to agree with arrangement of equipment furnished.

REFERENCES:

GP3-20/104 Wiring - DC Single Line Diagram
GP3-20/116 Wiring - Lighting Distribution Single Line
GP3-21/115 Lighting - Miscellaneous Details & Sections
GP3-21/102 Lighting - Control & Office Bay - El. 1717.25
GP3-14/132 Architectural - Observation & Exhibit Gallery - Details
GP3-14/135 Architectural - Details - Stair No. 1
GP3-14/149 Architectural - Control & Office Bay - Details of Inscription & Insigne

REFERENCE ONLY. CONTRACTOR TO FIELD VERIFY ALL CONDITIONS PRIOR TO WORK.

NO.	DATE	REVISION (INDICATED BY △)	BY	CHKD	APP.
1	3-23-53	Addendum No. 11	R.L.P.	R.J.M.	

CHAS. T. MAIN, INC.
ENGINEERS
BOSTON — MASS.

DEPARTMENT OF THE ARMY
CORPS OF ENGINEERS
OFFICE OF THE DISTRICT ENGINEER
BISMARCK, N. D.

DESIGNED: R.C.
DRAWN: V.A.C. S.H.
TRACED:
SUBMITTED: CHAS. T. MAIN, INC.
SUBMITTED: CHIEF, DESIGN BRANCH
APPROVED: LT. COL. C. OF E. DISTRICT ENGINEER

MISSOURI RIVER
GARRISON DAM AND RESERVOIR
POWERHOUSE
ELECTRICAL
OFFICE BAY
LIGHTING PLAN EL. 1730.25

APPROVAL RECOMMENDED: CHIEF, ENGINEERING DIVISION

SEPTEMBER 1952

SCALE: 1/4" = 1'-0"
SPEC. NO.
DRAWING NUMBER GP3-21/101
SHEET OF

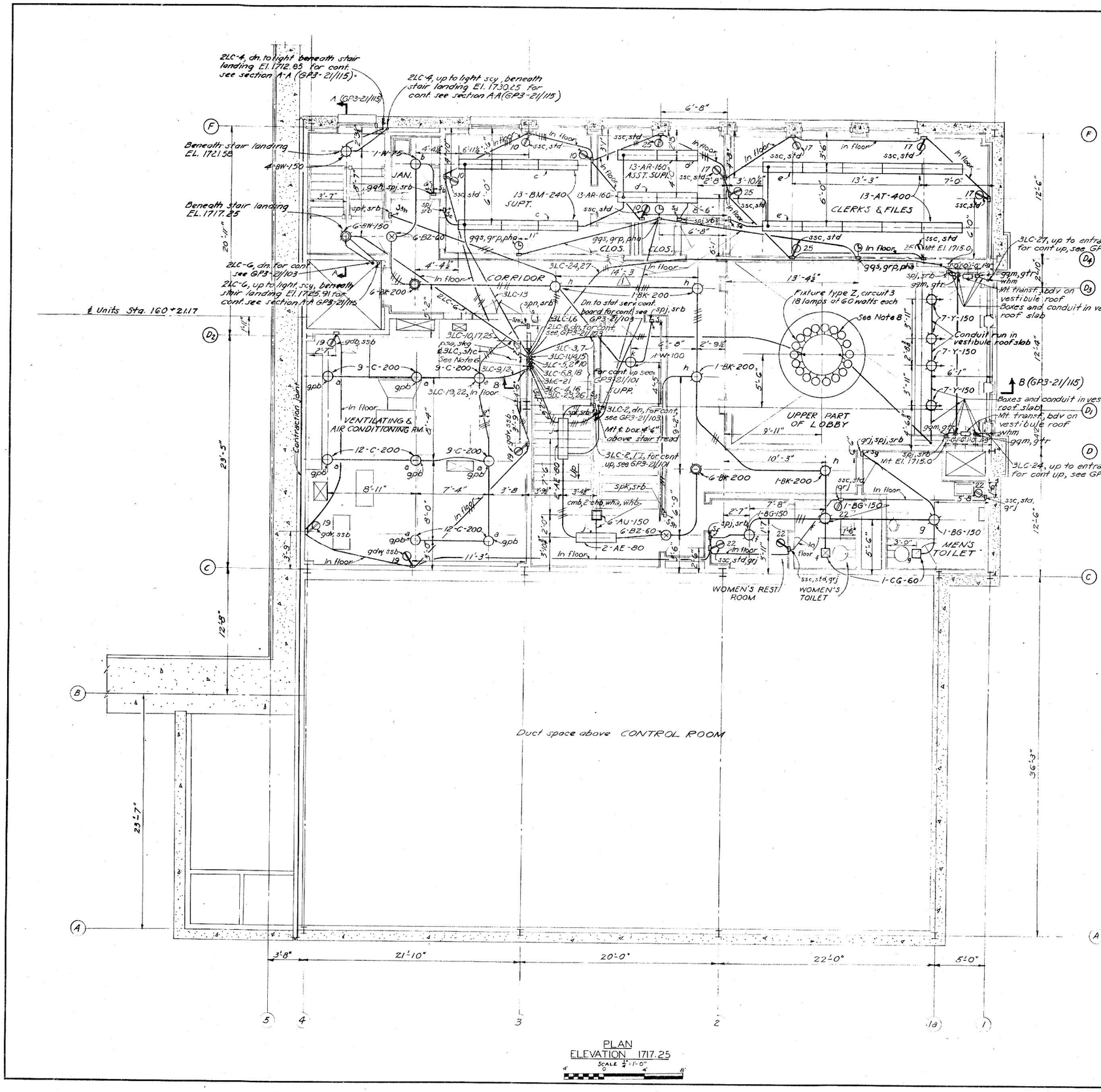

PLAN
ELEVATION 1717.25
SCALE 1/4" = 1'-0"

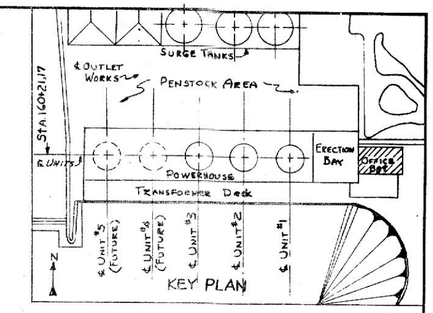

REFERENCE ONLY. CONTRACTOR TO FIELD VERIFY ALL CONDITIONS PRIOR TO WORK.

FIXTURE TYPE	MOUNTING HEIGHT	B/M MARK
C	7'-9"	sbn, smb
BW	Box mtd. ceiling	scy
BK	Box mtd. ceiling	scn
W	Box mtd. ceiling	sch
Y	Box mtd. vestibule roof	scp
Z	Ltg. fixture provided with vent	equip.
AE	Flush mtd. ceiling	sfc
AR	Flush mtd. ceiling	sfg
AT	Flush mtd. ceiling	sfh
BZ	1'-0" above top of door	scr
AU	Flush mtd. ceiling	scq
BG	Ltg. fixture provided with vent	equip.
BM	Flush mtd. ceiling	sff
CG	Flush mtd. ceiling	sdg

LEGEND

Spotlight - arrow indicates direction

Exit light

NOTES

1. For general notes and payment items, see GP3-21/106
2. For explanation of electrical symbols, see GP3-20/117
3. Unless otherwise noted, use 4" square outlet box (gqm) and 3/4" raised cover, (grp) for receptacles and switches
4. Outlet boxes for all lighting fixtures on this drawing are Universal No. 54171-3/4 (gpt), or equal, unless otherwise noted.
5. For additional conduits to lighting cabinet 3LC see GP3-22/102
6. At lighting cabinet 3LC, terminate 3/4" I conduit for future 3LC-28, above hung ceiling over corridor with coupling and plug
7. For Bill of Material items, see BM-GP3-21/102
8. For details of cove & fixture installation see GP3-14/127A

REFERECES

1. GP3-20/104 Wiring - DC Single Line Diagram
2. GP3-20/116 Wiring - Lighting Distribution Single Line
3. GP3-21/113A Lighting - Distribution Cabinet Details.
4. GP3-21/115 Lighting - Miscellaneous Details and Sections
5. GP3-21/101 Lighting - Control and Office Bay - El. 1730.25
6. GP3-21/103 Lighting - Control and Office Bay - El. 1703.0
7. GP3-14/1.91 Architectural - Miscellaneous Room Details - El. 1717.25
8. GP3-14/135 Architectural - Details - Stair No. 1

NO.	DATE	REVISION (INDICATED BY △)	BY	CHKD	APP.
1	4-28-54	Relocated clock conduits to reduce no. of 90° bends	WGL	JYW	RJP

CHAS. T. MAIN, INC. ENGINEERS BOSTON — MASS.

DEPARTMENT OF THE ARMY CORPS OF ENGINEERS OFFICE OF THE DISTRICT ENGINEER BISMARCK, N. D.

DESIGNED: R.C.
DRAWN: V.A.C. R.C.
TRACED:
SUBMITTED: George W. Bird, CHAS. T. MAIN, INC.

MISSOURI RIVER
GARRISON DAM AND RESERVOIR
POWERHOUSE
ELECTRICAL
OFFICE BAY
LIGHTING PLAN EL 1717.25

SUBMITTED: R D Field, CHIEF, DESIGN BRANCH
APPROVAL RECOMMENDED: CHIEF, ENGINEERING DIVISION
SEPTEMBER 1952
APPROVED: LT. COL. C. OF E. DISTRICT ENGINEER
SCALE: 1/4" = 1'-0"
SPEC. NO.
DRAWING NUMBER GP3-21/102
SHEET OF

Power Plant Contract

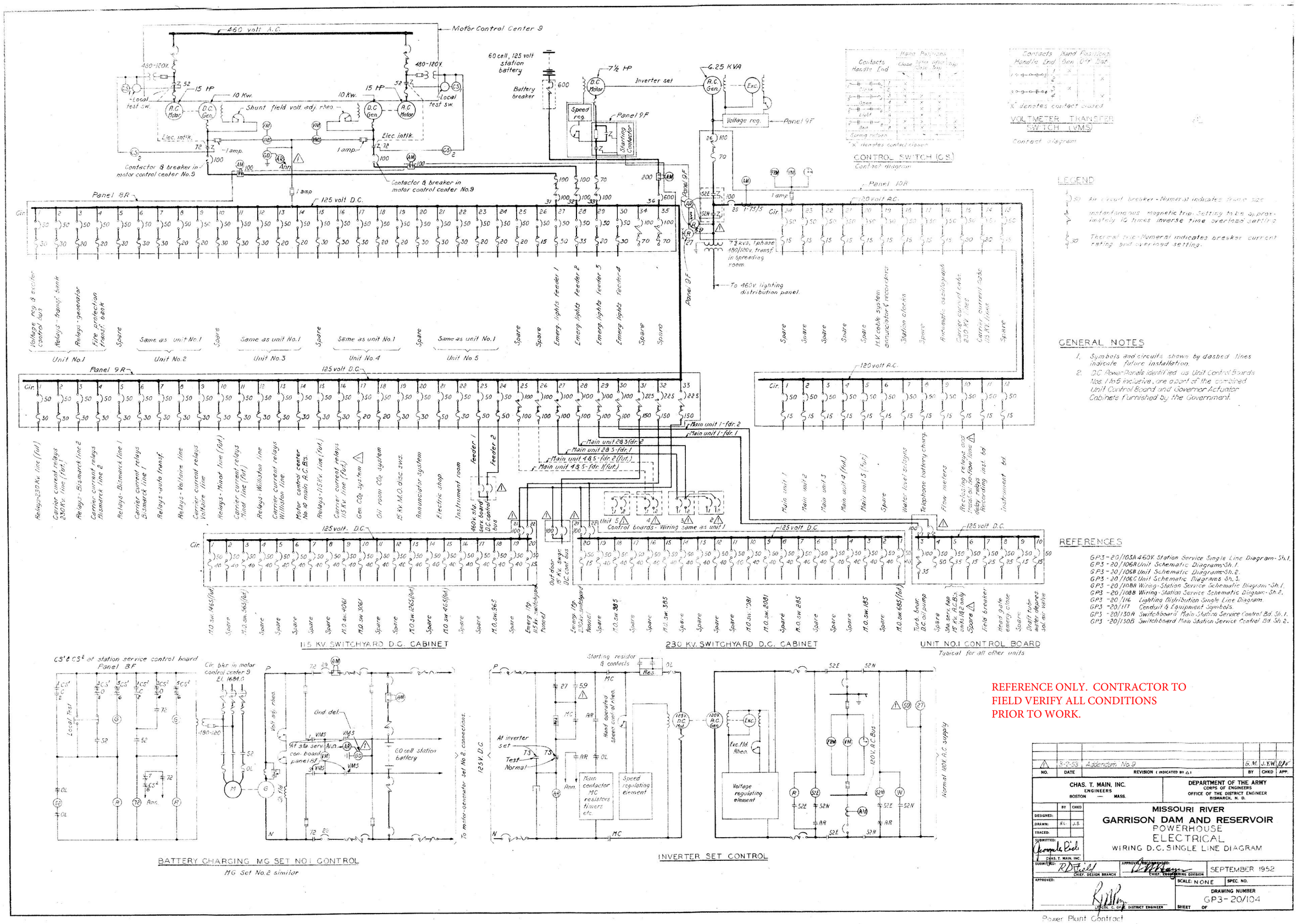

REFERENCE ONLY. CONTRACTOR TO FIELD VERIFY ALL CONDITIONS PRIOR TO WORK.

NO.	DATE	REVISION (INDICATED BY △1)	BY	CHKD	APP.
1	3-2-53	Addendum No.9	G.M.	J.Y.W.	

CHAS. T. MAIN, INC.
ENGINEERS
BOSTON — MASS.

DEPARTMENT OF THE ARMY
CORPS OF ENGINEERS
OFFICE OF THE DISTRICT ENGINEER
BISMARCK, N. D.

DESIGNED: BY CHKD
DRAWN: H.L. J.S.
TRACED:
SUBMITTED: CHAS. T. MAIN, INC.
SUBMITTED: R.D. Field, CHIEF, DESIGN BRANCH
APPROVAL RECOMMENDED: CHIEF, ENGINEERING DIVISION
APPROVED: LT. COL. C. OF E. DISTRICT ENGINEER

MISSOURI RIVER
GARRISON DAM AND RESERVOIR
POWERHOUSE
ELECTRICAL
WIRING D.C. SINGLE LINE DIAGRAM

SEPTEMBER 1952
SCALE: NONE
SPEC. NO.
DRAWING NUMBER GP3-20/104
SHEET OF

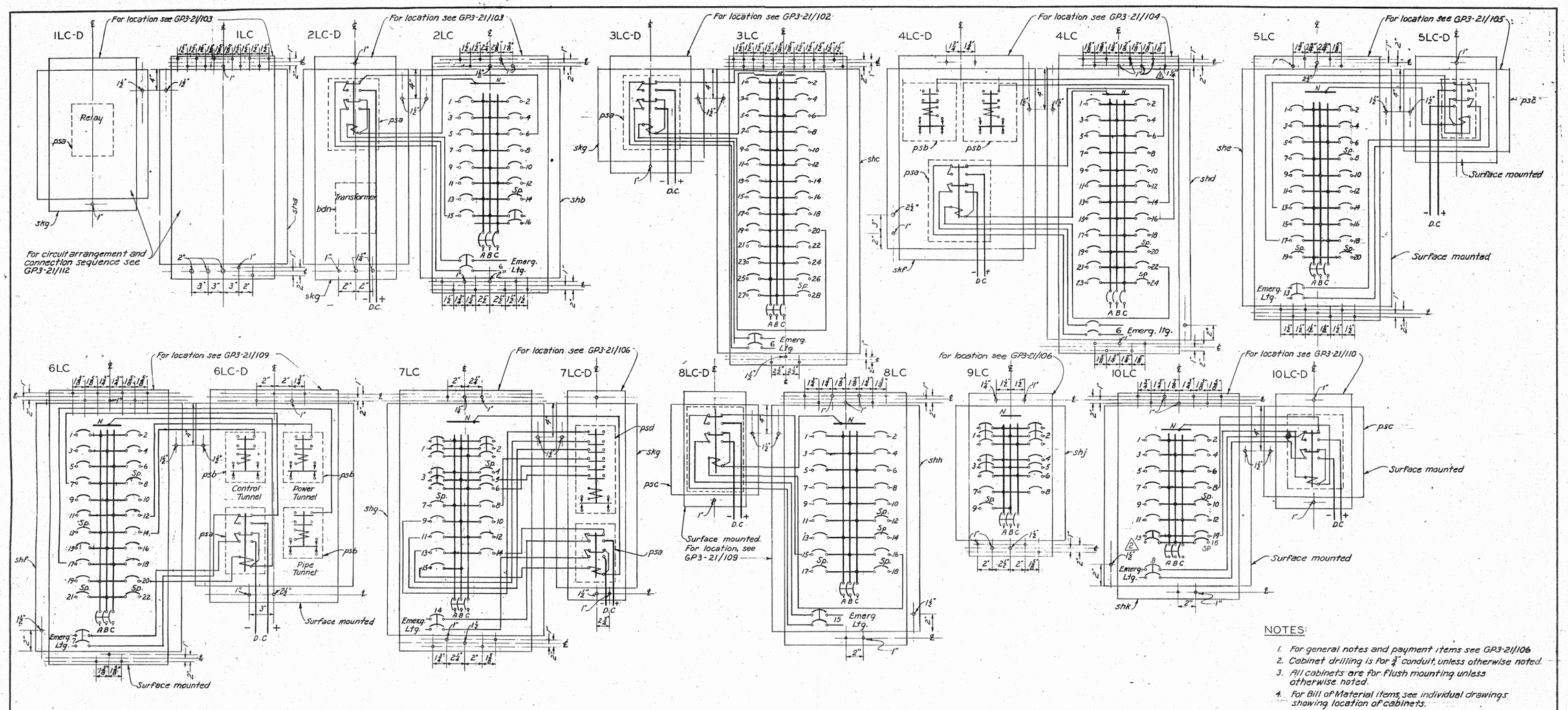

NOTES:

1. For general notes and payment items see GP3-21/106
2. Cabinet drilling is for ¾" conduit, unless otherwise noted.
3. All cabinets are for flush mounting unless otherwise noted.
4. For Bill of Material items, see individual drawings showing location of cabinets.
5. Provide circuit lock-off device (smm) for relay coil, refrigerator, range, and motor circuit breakers.
6. For circuit breaker sizes & trip elements, see GP3-21/114A & B.

REFERENCES:

GP3-21/114A - Lighting Panel Schedule - Sheet 1
GP3-21/114B - Lighting Panel Schedule - Sheet 2

REFERENCE ONLY. CONTRACTOR TO FIELD VERIFY ALL CONDITIONS PRIOR TO WORK.

COMPANION DRAWING GP3-21/113B

NO.	DATE	REVISION (INDICATED BY △)	BY	CHKD	APP.
2	8-1-55	Added 2P 15 Amp. Circuit Breaker in 10LC	JBL	RBS	RD
	8-12-54	Line added 13LCR & 13LC Cabinet	JBL	JBL	RD

CHAS. T. MAIN, INC. ENGINEERS BOSTON — MASS.

DEPARTMENT OF THE ARMY CORPS OF ENGINEERS OFFICE OF THE DISTRICT ENGINEER BISMARCK, N. D.

MISSOURI RIVER
GARRISON DAM AND RESERVOIR
POWERHOUSE
ELECTRICAL
LIGHTING-DISTRIBUTION CABINET DETAILS
SHEET 1

DESIGNED: RC
DRAWN: JAF RC
TRACED:
SUBMITTED: CHAS. T. MAIN, INC.
SUBMITTED: CHIEF, DESIGN BRANCH
APPROVAL RECOMMENDED: CHIEF, ENGINEERING DIVISION
APPROVED: LT. COL. C. OF E. DISTRICT ENGINEER
SCALE: NONE
SEPTEMBER 1952
SPEC. NO.
DRAWING NUMBER GP3-21/113A
SHEET OF

Power Plant Contract

LIGHTING PANEL SCHEDULES

CIR. NO.	SERVICE	BREAKER FRAME	BREAKER TRIP	CONDUCTOR NO.	CONDUCTOR SIZE	LOAD (WATTS) AN	LOAD (WATTS) BN	LOAD (WATTS) CN
1	North Cove	50A.	20A.	1	12	1650		
2	West Cove	50A.	20A.	1	12	1650		
3	North Cove	50A.	20A.	1	12		1650	
4	North Cove	50A.	20A.	1	12		1650	
5	East Cove	50A.	20A.	1	12			1800
6	North Cove	50A.	20A.	1	12			1500
7	Center Cove	50A.	20A.	1	12	1800		
8	East Cove	50A.	20A.	1	12	1650		
9	West Cove	50A.	20A.	1	12		1800	
10	Center Cove	50A.	20A.	1	12		1650	
11	North Cove	50A.	20A.	1	12			1650
12	West Cove	50A.	20A.	1	12			1650
13	North Cove	50A.	20A.	1	12	1650		
14	Emergency	50A.	15A.	1	12	1200		
15	East Cove	50A.	20A.	1	12		1650	
16	Spare	50A.	20A.					
17	Center Cove	50A.	20A.	1	12			1650
18	Spare	50A.	20A.					
19	East Fluorescent Lights	50A.	15A.	1	12	640		
20	△Motor For Dimmer	50A.	15A.	1	12	Note 8		
21	Center Fluorescent Lights	50A.	15A.	1	12		640	
22	Inst., Vestibule & Dark Rm. Lights	50A.	15A.	1	12		1175	
23	West Fluorescent Lights	50A.	15A.	1	12			640
24	△Receptacles	50A.	15A.	1	12			900
25	Cove Lighting Feed	**100A.	90A	3	2	9600	8400	8250
26	Spare	50A.	15A.					
28	Spare	50A.	15A.					
30	△Receptacles	50A.	15A.	1	12			720
31	△Relay Coil	50A.	15A	1	12			
	Main Breaker	**100A.	90A					

MISSOURI RIVER
GARRISON DAM & RESERVOIR
RIVERDALE, N.D.
LIGHTING PANEL 1LC
SHEET NO. 1

LIGHTING PANEL SCHEDULES

CIR. NO.	SERVICE	BREAKER FRAME	BREAKER TRIP	CONDUCTOR NO.	CONDUCTOR SIZE	LOAD (WATTS) AN	LOAD (WATTS) BN	LOAD (WATTS) CN
1	Rest Rms., Lobby, Info., Obs. Rm	50A.	15A.	2	12	1419		
2	△Receptacles	50A.	15A.	1	12	720		
3	Car., Stor., Kit., Jan., & Toilet	50A.	15A.	1	12		1030	
4	Stairway	50A.	15A.	1	12		300	
5	Buzzer for Door	50A.	15A.					Note 8
6	Emergency	50A.	15A.	3	12			1220
7	First Aid, Toilet, Closet	50A.	15A.	1	12	980		
8	△Receptacles	50A.	15A.	1	12	540		
9	Elevator Light	50A.	15A.	1	12		Note 8	
10	△Receptacles	50A.	15A.	1	12		900	
11	Entrance & Vest. Lts.	50A.	15A.	1	12			1050
12	△Receptacles	50A.	15A.	1	12			720
13	△Refrigerator	50A.	15A.	1	12	Note 8		
14	Spare	50A.	15A.					
15	△Relay Coil	50A.	15A.	1	12			
16	△Range.	*50A.	40A.	2	8		Note 8	
	Main Breaker	**100A.	70A.					

MISSOURI RIVER
GARRISON DAM & RESERVOIR
RIVERDALE, N.D.
LIGHTING PANEL 2LC
SHEET NO. 2

LIGHTING PANEL SCHEDULES

CIR. NO.	SERVICE	BREAKER FRAME	BREAKER TRIP	CONDUCTOR NO.	CONDUCTOR SIZE	LOAD (WATTS) AN	LOAD (WATTS) BN	LOAD (WATTS) CN
1	Corridor & Toilets	50A.	15A.	1	12	1425		
2	Stairway	50A.	15A.	1	12	320		
3	Lobby	50A.	15A.	1	12		1080	
4	Obs., Exhibit Gall., El. Mach.	50A.	15A	1	12		1140	
5	Assembly Room	50A.	20A.	1	10			1440
6	Emergency	50A.	15A.	3	12			1230
7	Vest. Roof	50A.	15A.	1	12	600		
8	Corridor & Exhibit Gall.	50A.	15A.	1	12	1050		
9	Vent & Air Conditioning	50A.	15A.	1	12		800	
10	△Receptacles	50A.	15A.	1	12		720	
11	△Receptacles △	50A.	15A.	1	12			720
12	Vent & Air Conditioning	50A.	15A.	1	12			800
13	Supt., Asst. Supt., & Clerks	50A.	20A.	1	12	1600		
14	△Receptacles △	50A.	15A.	1	12	720		
15	△Receptacles △	50A.	15A.	1	12		720	
16	Exhibit Gallery	50A.	15A.	1	12		1280	
17	△Receptacles	50A.	15A.	1	12			720
18	Stor., Jan., & Toilets	50A.	15A.	1	12			970
19	△Receptacles	50A.	15A.	1	12	720		
20	△Relay Coil	50A.	15A.	1	12			
21	Elevator Mach. Equipt.	50A.	15A.	1	12		Note 8	
22	△Receptacles	50A.	15A.	1	12		720	
23	△Receptacles	50A	15A.	1	12			720
24	Sign Transformer	50A	15A	1	12			Note 8
25	△Receptacles	50A	15A	1	12	720		
26	△Receptacles	50A	15A	1	12	720		
27	Sign Transformer	50A	15A	1	12		Note 8	
28	Spare	50A	15A					
	Main Breaker	**100A	70A					

MISSOURI RIVER
GARRISON DAM & RESERVOIR
RIVERDALE, N.D.
LIGHTING PANEL 3LC
SHEET NO. 3

LIGHTING PANEL SCHEDULES

CIR. NO.	SERVICE	BREAKER FRAME	BREAKER TRIP	CONDUCTOR NO.	CONDUCTOR SIZE	LOAD (WATTS) AN	LOAD (WATTS) BN	LOAD (WATTS) CN
1	Locker Room	50A.	15A.	1	10	1200		
2	△Receptacles	50A.	15A.	1	12	1080		
3	Still	50A.	15A.	1	10			Note 8
4	Elect. Shop, M.G. Set & Bat. Rms.	50A.	15A.	1	12		1200	
5	Spreader Room	50A.	15A.	1	12			1200
6	Emergency	50A.	15A.	5	12			1275
7	Stor., Util., Toilet, Show. Rms.	50A.	15A.	1	10	1400		
8	Telephone Room	50A.	15A.	1	12	1050		
9	Telephone & H.V. Cable Rms.	50A.	15A.	1	12		1200	
10	Spreader Room	50A.	15A.	1	12		1200	
11	Spreader Room	50A.	15A.	1	12			1200
12	Corridor No. 1	50A.	15A.	1	12			1200
13	Spreader Room	50A.	15A.	1	12	1000		
14	Control Tunnel Lights	50A.	15A.	1	10	375		
15	Control Rm. Board Lts.	50A.	15A.	1	12		Note 8	
16	Power Tunnel Lights	50A.	15A.	1	10		600	
17	△Receptacles	50A.	15A.	1	12			1260
18	△Circ. Pumps & Aquastat	50A.	15A.	1	12			Note 8
19	Control Rm. Board Lts.	50A.	15A.	1	12	Note 8		
20	Spare	50A.	15A.					
21	△Receptacles	50A.	15A.	1	12		900	
22	△Relay Coil	50A.	15A.	1	12			
23	Gen. Dome Lights	50A.	15A.	1	12			240
24	Spare	50A.	15A.					
	Main Breaker	**100A.	70A.					

MISSOURI RIVER
GARRISON DAM & RESERVOIR
RIVERDALE, N.D.
LIGHTING PANEL 4LC
SHEET NO. 4

LIGHTING PANEL SCHEDULES

CIR. NO.	SERVICE	BREAKER FRAME	BREAKER TRIP	CONDUCTOR NO.	CONDUCTOR SIZE	LOAD (WATTS) AN	LOAD (WATTS) BN	LOAD (WATTS) CN
1	Water Treatment	50A.	15A.	1	12	1000		
2	Air Compressor Plan. Rm.	50A.	15A.	2	12	800		
3	Water Treatment	50A.	15A.	1	10		1400	
4	Equipment Storage	50A.	15A.	1	12		800	
5	Fan Room #2	50A.	15A.	1	12			1200
6	Equipment Storage	50A.	15A.	1	12			1000
7	Oil Storage	50A.	15A.	1	12	1200		
8	Spare	50A.	15A.					
9	Oil Storage	50A.	15A.	1	12		1000	
10	Sanitary Drainage	50A.	15A.	1	12		800	
11	Oil Purif. & CO_2 Room	50A.	15A.	1	12			1250
12	Lobby & Stairway	50A.	15A.	1	12			1350
13	Emergency	50A.	15A.	7	12	1400		
14	△Receptacles	50A.	15A.	1	12	720		
15	△Receptacles	50A.	15A.	1	12		1080	
16	△Receptacles	50A.	15A.	1	12		720	
17	△Relay Coil	50A.	15A.	1	12			
18	△Receptacle (Oven)	50A.	15A.	1	12			Note 8
19	Spare	50A.	15A.					
20	Spare	50A.	15A.					
	Main Breaker	**100A	70A.					

MISSOURI RIVER
GARRISON DAM & RESERVOIR
RIVERDALE, N.D.
LIGHTING PANEL 5LC
SHEET NO. 5

LIGHTING PANEL SCHEDULES

CIR. NO.	SERVICE	BREAKER FRAME	BREAKER TRIP	CONDUCTOR NO.	CONDUCTOR SIZE	LOAD (WATTS) AN	LOAD (WATTS) BN	LOAD (WATTS) CN
1	Station Service Swgr. Rm.	50A.	15A.	1	12	1000		
2	Station Service Swgr. Rm.	50A.	15A.	1	12	900		
3	Station Service Swgr. Rm.	50A.	15A.	1	12		900	
4	Station Service Swgr. Rm.	50A.	15A.	1	10		900	
5	Station Service Swgr. Rm.	50A.	15A.	1	12			900
6	Station Service Swgr. Rm.	50A.	15A.	1	12			600
7	Emergency	50A.	15A.	5	12	1125		
8	Spare	50A.	15A.					
9	Machine Shop	50A.	15A.	1	10		750	
10	Corridor No. 2	50A.	15A.	1	10		900	
11	Machine Shop	50A.	15A.	1	10			900
12	Power Tunnel	50A.	15A.	1	12			375
13	Spare	50A.	15A.					
14	Control Tunnel	50A.	15A.	1	12	450		
15	△Receptacles	50A.	15A.	1	10		1080	
16	△Receptacles	50A.	15A.	1	10		720	
17	Pipe Tunnel	50A.	15A.					600
18	△Receptacles	50A.	15A.	1	10			720
19	△Receptacles	50A.	20A.	1	10	1620		
20	△Relay Coil	50A.	15A.					
21	Spare	50A.	15A.					
22	Spare	50A.	15A.					
	Main Breaker	**100A	70A.					

MISSOURI RIVER
GARRISON DAM & RESERVOIR
RIVERDALE, N.D.
LIGHTING PANEL 6LC
SHEET NO. 6

LIGHTING PANEL SCHEDULES

CIR. NO.	SERVICE	BREAKER FRAME	BREAKER TRIP	CONDUCTOR NO.	CONDUCTOR SIZE	LOAD (WATTS) AN	LOAD (WATTS) BN	LOAD (WATTS) CN
1	Erection Bay	**50A.	20A.	3	2-10, 1-8	1150	1150	1150
2	Erection Bay	**50A.	20A.	3	2-10, 1-8	1150	1150	1150
3	Erection Bay	**50A.	20A.	3	10	1150	1150	1150
4	Spare	50A.	15A.					
5	Transformer Deck E.B.	50A.	15A.	1	12		900	
6	Transformer Deck E.B.	50A.	15A.	1	12			900
7	Spare	50A.	15A.					
8	Transformer Deck Unit 1	50A.	15A.	1	12	900		
9	Transformer Deck Unit 1	50A.	15A.	1	12		600	
10	△Receptacles	50A.	15A.	1	12		720	
11	Transformer Deck Unit 2	50A.	15A.	1	10			900
12	△Receptacles	50A.	15A.	1	12			540
13	Transformer Deck Unit 2	50A.	15A.	1	10	600		
14	Emergency	50A.	15A.	1	12	1200		
15	△Relay Coil	50A.	15A.	1	12			
	Main Breaker	**100A.	70A.					

MISSOURI RIVER
GARRISON DAM & RESERVOIR
RIVERDALE, N.D.
LIGHTING PANEL 7LC
SHEET NO. 7

LIGHTING PANEL SCHEDULES

CIR. NO.	SERVICE	BREAKER FRAME	BREAKER TRIP	CONDUCTOR NO.	CONDUCTOR SIZE	LOAD (WATTS) AN	LOAD (WATTS) BN	LOAD (WATTS) CN
1	Turbine Room	50A.	15A.	1	12	1000		
2	Turbine Room	50A.	15A.	1	10	800		
3	Turbine Room	50A.	15A.	1	10		1000	
4	Fan Rm. No. 3 & Pens. Stwy.	50A.	15A.	1	10		625	
5	Turbine Pit Area	50A.	15A.	1	10			1300
6	Fan Room No. 3	50A.	15A.	1	10			600
7	Turbine Room	50A.	15A.	1	10	800		
8	Turbine Central Lube Sys.	50A.	15A.	1	12	Note 8		
9	△Receptacles	50A.	15A	2	1-10, 1-12		720	
10	Thrust Bearing Area	50A.	15A.	1	12		450	
11	Turbine Room	50A.	15A.	1	12			300
12	Spare	50A.	15A.					
13	△Receptacles	50A.	15A.	1	10	540		
14	Spare	50A.	15A.					
15	Emergency	50A.	15A.	3	12		550	
16	△Relay Coil	50A.	15A.	1	12			
17	Spare	50A.	15A.					
18	Spare	50A.	15A.					
	Main Breaker	**50A.	50A.					

MISSOURI RIVER
GARRISON DAM & RESERVOIR
RIVERDALE, N.D.
LIGHTING PANEL 8LC
SHEET NO. 8

REFERENCE DOCUMENT ONLY FOR UBRO OFFICE UPGRADES. SEE ATTACHED INFO ON PANEL 3LC CURRENT SCHEDULE AND BREAKER INFORMATION. CONTRACTOR TO FIELD VERIFY CONDITIONS PRIOR TO WORK.

GENERAL NOTES:

1. Neutral wires are not included in the number of conductors.
2. Install one neutral wire for each conduit run. Where two circuits on the same phase occur in a common conduit, install two neutral wires.
3. Install separate neutral wire for emergency circuits.
4. All breakers are single pole except where noted with asterisks.
5. Single asterisk (*) denotes double pole breaker.
6. Double asterisk (**) denotes triple pole breaker.
7. Emergency circuits are provided with single pole breakers for normal operation and double pole breakers for emergency operation.
8. See manufacturer's prints for exact load.
9. Estimated receptacle load is 180 watts.
10. Provide circuit lock-off device (3mm), denoted by symbol (△), for relay coil, refrigerator, range, receptacles, and motor circuit breakers.

REFERENCES:

GP3-21/113A - Lighting - Distribution Cabinet Details
GP3-21/113B - Lighting - Distribution Cabinet Details

COMPANION DRAWINGS: GP3-21/114 B
GP3-21/114 C

NO.	DATE	REVISION (INDICATED BY △)	BY	CHKD	APP.
1	6-15-53	Addendum No. 11	RLP	RJM	

CHAS. T. MAIN, INC.
ENGINEERS
BOSTON — MASS.

DEPARTMENT OF THE ARMY
CORPS OF ENGINEERS
OFFICE OF THE DISTRICT ENGINEER
BISMARCK, N. D.

DESIGNED: RC
DRAWN: JVD RC
TRACED:
SUBMITTED: CHAS. T. MAIN, INC.
SUBMITTED: CHIEF, DESIGN BRANCH
APPROVAL RECOMMENDED: CHIEF, ENGINEERING DIVISION
APPROVED: LT. COL. C. OF E. DISTRICT ENGINEER

MISSOURI RIVER
GARRISON DAM AND RESERVOIR
POWERHOUSE
ELECTRICAL
LIGHTING PANEL SCHEDULES
SHEET 1

SEPTEMBER 1952
SCALE: NONE
SPEC. NO.
DRAWING NUMBER GP3-21/114 A
SHEET OF

Power Plant Contract

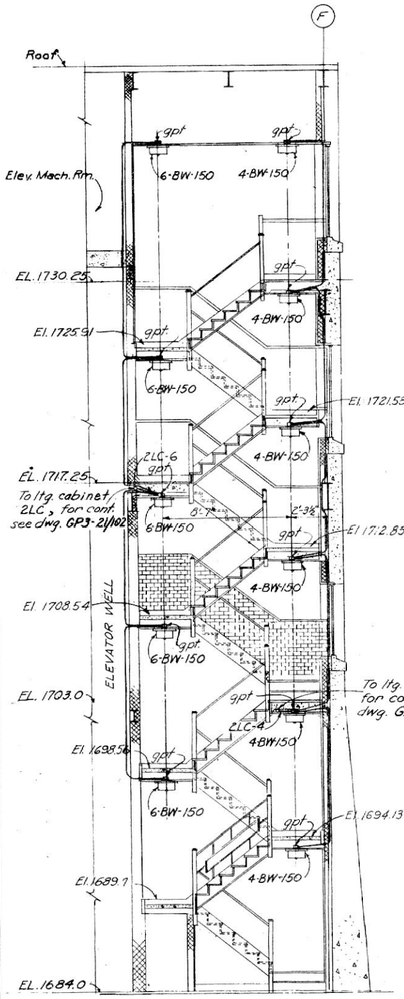

SECTION A-A

SCALE: $\frac{1}{4}$"=1'-0"

GP3-21/101,102,103,104

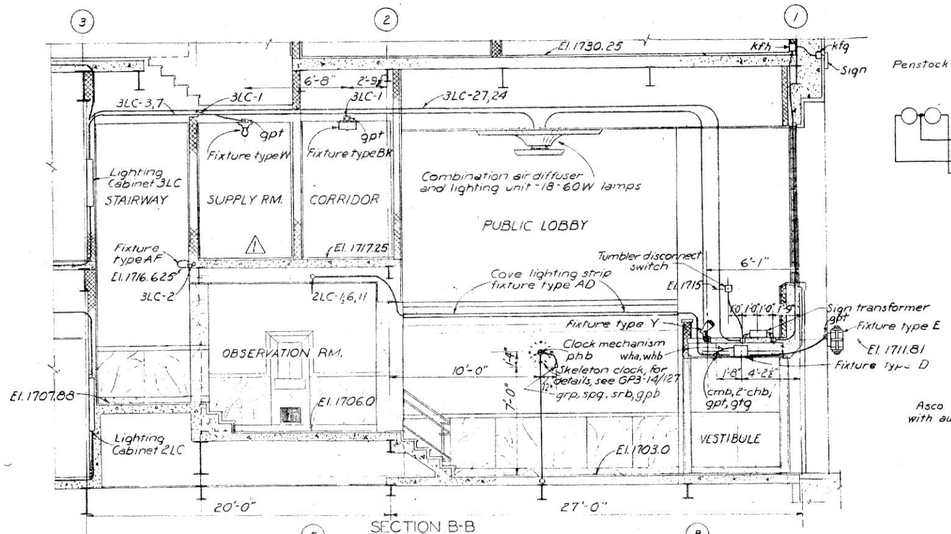

SECTION B-B

SCALE: $\frac{1}{4}$"=1'-0"

GP3-21/102,103

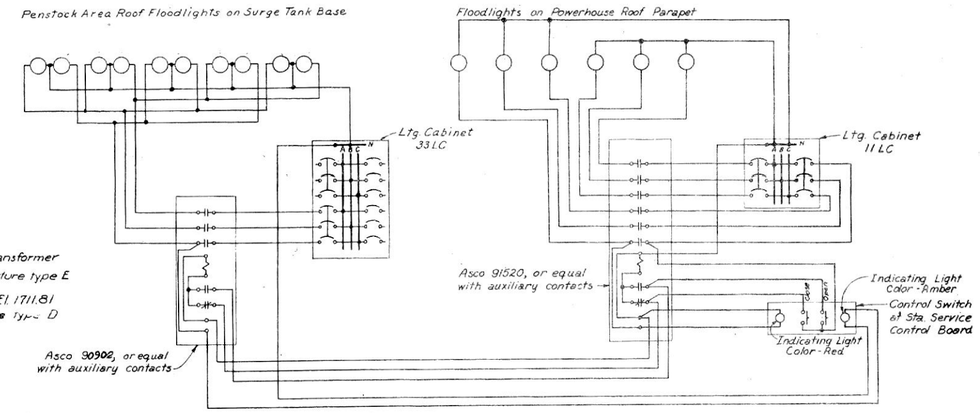

WIRING DIAGRAM

PENSTOCK ROOF AREA FLOODLIGHTS

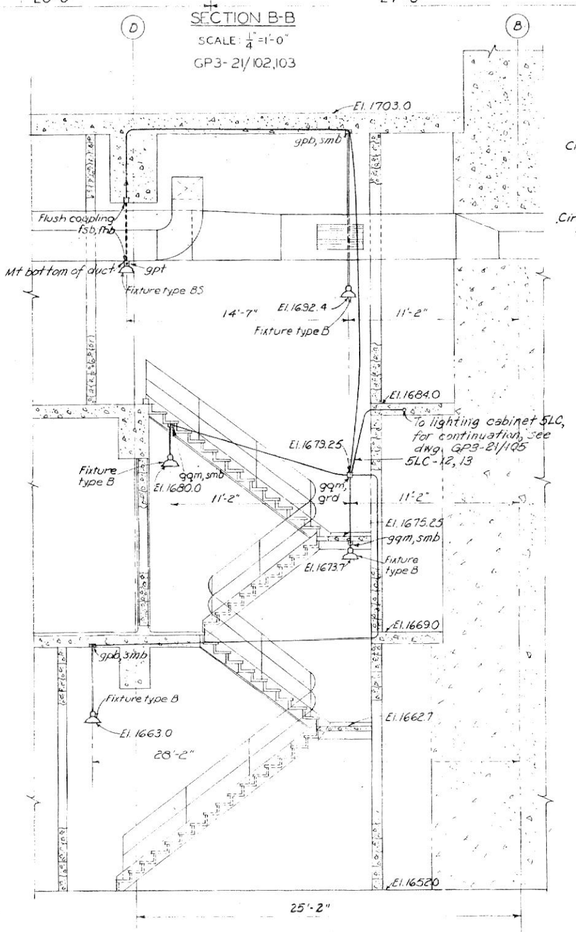

SECTION C-C

SCALE: $\frac{1}{4}$"=1'-0"

GP3-21/105,109

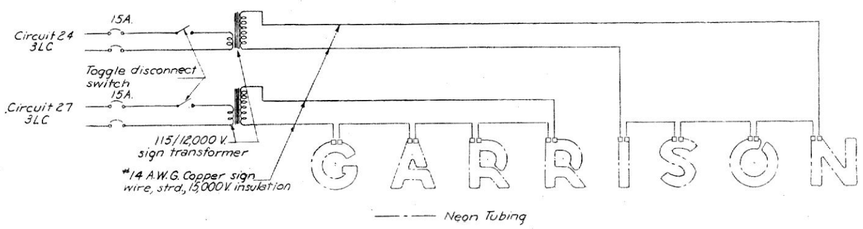

WIRING DIAGRAM

SILHOUETTE SIGN LIGHTING

REFERENCE ONLY. CONTRACTOR TO FIELD VERIFY ALL CONDITIONS PRIOR TO WORK.

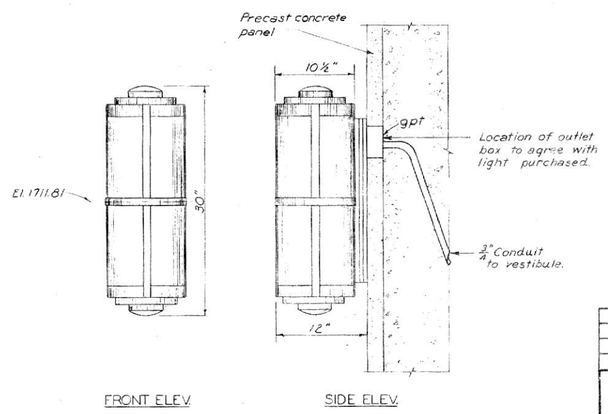

DETAIL B

ENTRANCE LIGHT TYPE E

NO SCALE

GP3-21/103

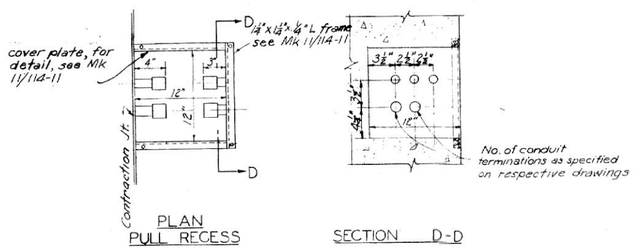

PLAN PULL RECESS

SECTION D-D

DETAIL A

SCALE: $1\frac{1}{2}$"=1'-0"

GP3-21/109,110,111

NO.	DATE	REVISION (INDICATED BY Δ)	BY	CHKD	APP.
1.	4-20-54	Removed conduits that do not appear in Section B-B	WGL	JYW	RBF

CHAS. T. MAIN, INC. ENGINEERS BOSTON — MASS.

DEPARTMENT OF THE ARMY CORPS OF ENGINEERS OFFICE OF THE DISTRICT ENGINEER BISMARCK, N. D.

DESIGNED: RC
DRAWN: VAG, LCB, RC
TRACED:
SUBMITTED: Joseph Pick, CHAS. T. MAIN, INC.
SUBMITTED: R D Field, CHIEF, DESIGN BRANCH
APPROVED: W T Bartlett, LT.COL. C. OF E. DISTRICT ENGINEER, ACT.
APPROVAL RECOMMENDED: J H Hamm, CHIEF, ENGINEERING DIVISION

MISSOURI RIVER
GARRISON DAM AND RESERVOIR
POWERHOUSE
ELECTRICAL
LIGHTING
MISCELLANEOUS DETAILS & SECTIONS

SEPTEMBER 1952

SCALE: AS NOTED SPEC. NO.

DRAWING NUMBER GP3-21/115

SHEET OF

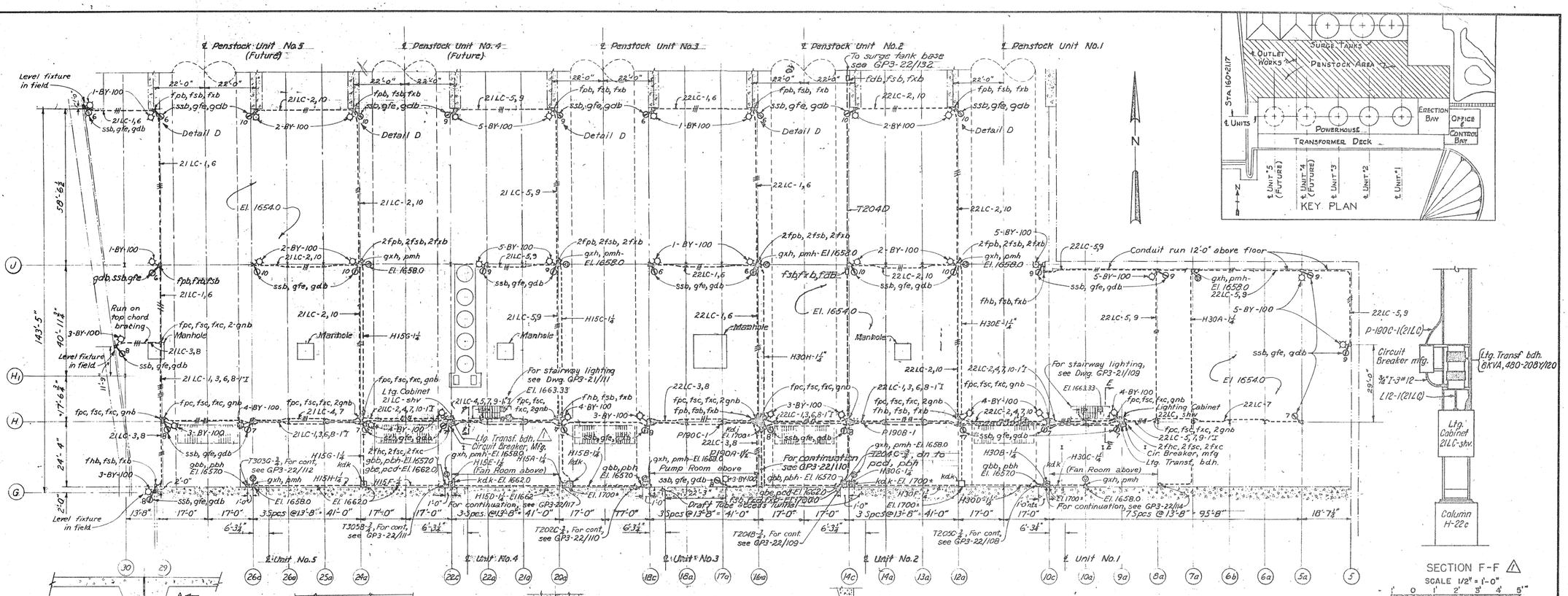

PLAN - EL. 1693.0

SCALE 1/16" = 1'-0"

SECTION F-F

SCALE 1/2" = 1'-0"

REFERENCE ONLY. CONTRACTOR TO FIELD VERIFY ALL CONDITIONS PRIOR TO WORK.

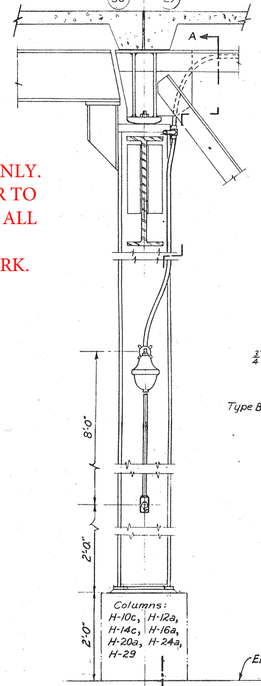

DETAIL A

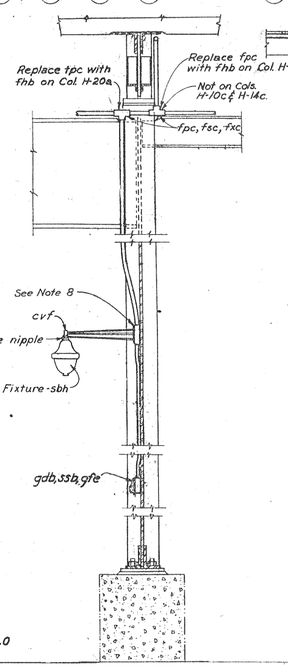

SECTION A-A

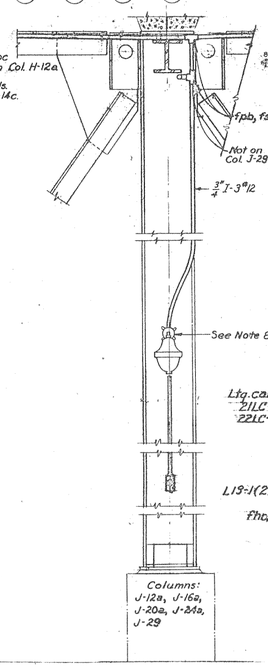

DETAIL B

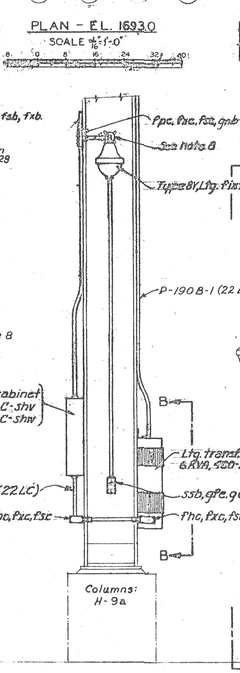

SECTION E-E

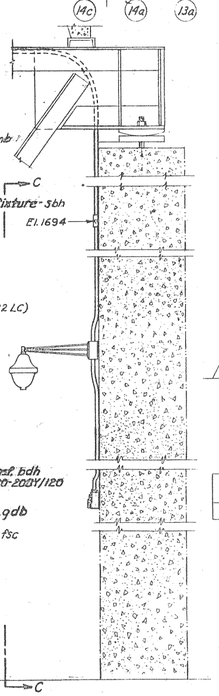

DETAIL D

TYPICAL BRACKET FIXTURE DETAILS

SCALE: ¾" = 1'-0"

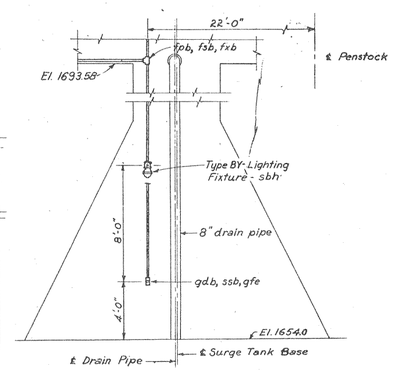

ELEVATION C-C

NO SCALE

FIXTURE TYPE	MOUNTING HEIGHT	B/M MARK
BY	12'-0" above El. 1654.0	sbh

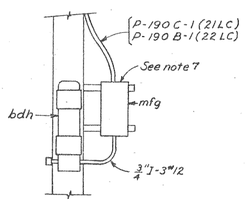

ELEVATION B-B

NO SCALE

NOTES:

1. For general notes and payment items see GP3-21/105.
2. For explanation of electrical symbols see GP3-20/117.
3. Conduits shall be run exposed along walls & structural steel.
4. For bill of material items, see BM GP3-21/115.
5. Mount top of ltg. cabinets 6'-0" above floor slab.
6. Mount all receptacles 4'-0" above floor slab.
7. Mount top of transformer & breaker 5'-0" above floor slab.
8. Field to drill and tap lighting bracket boxes for additional conduit entrances as required.
9. Ground bus for grounding columns & equipment in this area is shown on U.S.E.D. dwg. Lighting panels & transformer ground connection is through column it is mounted on.

REFERENCE:

GP3-20/116-Wiring-Lighting Distribution Single Line Diagram.
GP3-21/113B-Lighting-Distribution Cabinet Details.
GP3-22/110-Conduit Plan-Generator Rm. Unit 3, El. 1703.0
GP3-22/109-Conduit Plan-Generator Rm. Unit 2, El. 1703.0
GP3-22/108-Conduit Plan-Generator Rm. Unit 1, El. 1703.0
GP3-22/111-Conduit Plan-Generator Rm. Unit 4, El. 1703.0
GP3-22/112-Conduit Plan-Generator Rm. Unit 5, El. 1703.0
GP3-22/114-Conduit Plan-Turbine Rm. Unit 1, El. 1684.0
GP3-22/117-Conduit Plan-Turbine Rm. Unit 4, El. 1684.0
GP3-22/132-Conduit System Units 1,2,&4-Surge Tank Bases

NO.	DATE	REVISION (INDICATED BY △)	BY	CHKD	APP.
1	3-23-53	Addendum No. 11	RLP	RJM	

CHAS. T. MAIN, INC. ENGINEERS BOSTON — MASS.

DEPARTMENT OF THE ARMY CORPS OF ENGINEERS OFFICE OF THE DISTRICT ENGINEER BISMARCK, N. D.

	BY	CHKD
DESIGNED:	RC	
DRAWN:	JAF	LMB
TRACED:		
SUBMITTED:	George L. Reid	
CHAS. T. MAIN, INC.		

MISSOURI RIVER
GARRISON DAM AND RESERVOIR
POWERHOUSE
ELECTRICAL
PENSTOCK AREA
LIGHTING PLAN & DETAILS EL. 1693.0

SUBMITTED: R. P. Field, CHIEF, DESIGN BRANCH

APPROVAL RECOMMENDED: D. D. Allen, CHIEF, ENGINEERING DIVISION

SEPTEMBER 1952

APPROVED: N. D. Buckhart, LT. COL. C. OF E. DISTRICT ENGINEER, JCT.

SCALE: AS NOTED SPEC. NO.

DRAWING NUMBER GP3-21/116

SHEET OF

CIRCUIT DIRECTORY

LIGHTING PANEL 3LC

1	LIGHTING 5TH FLOOR HALLWAY, RESTROOM & SUPPLY ROOM LIGHTS	2	LIGHTING: LOBBY STAIRS
3	LIGHTING: O&M MANAGER, O&M ASST. PARTITION RECEPTACLES	4	LIGHTING OBSERVATION BALCONY, ELEVATOR RM CONF RM. S SPOTLIGHTS
5	LIGHTING: PRINT ROOM	6	LIGHTING: NORMAL FEEDER TO EMERGENCY LIGHTS
7	LIGHTING: CLERKS OFFICE	8	LIGHTING 6TH FLOOR HALLWAY CONF RM. N SPOTLIGHTS
9	LIGHTING: FAN ROOM 1-NORTH LIGHTS	10	RECEPT. ELEC. ENGINEER OFFICE
11	RECEPT. LADIES RESTROOM AND PRINT ROOM	12	LIGHTING: FAN ROOM 1-SOUTH LIGHTS
13	RECEPT. O&M MANAGER, O&M ASST.	14	RECEPT. PRINT ROOM
15	RECEPT. PRINT ROOM, MEN'S ROOM STORAGE ROOM	16	LIGHTING: CONFERENCE ROOM FLUORESCENT
17	LIGHTING: ELEC. EN(COPY ROOM	18	LIGHTING 6TH FLOOR JANITOR CLOSET, STORAGE ROOM, RESTROOMS
19	RECEPT. CLERKS OFFICE-SOUTH WALL	20	LIGHTING: EMERGENCY LIGHTING RELAY
21	Elevator Cab Lts	22	RECEPT. 5TH FLOOR RESTROOMS
23	RECEPT. 6TH FLOOR HALLWAY, CONF. ROOM, ELEVATOR EQUIPMENT RM	24	SIGN Led ~~XFMR~~ FOR LETTERS: I S O N CARR
25	RECEPT. FAN ROOM 1	26	RECEPT. CONF. RM, OBSERVATION BALCONY
27	~~SIGN~~ Mezzanine by ~~XFMR FOR LETTERS:~~ ~~C A R R~~ New Relay Rm	28	CONTROL: SUPPLY FAN- 20A

MUTH ELECTRIC, INC.

1825 SAMCO ROAD

RAPID CITY, SD 57702

(605) 341 - 3554

"24 HOUR SERVICE"

	PANEL		
29	~~Spare~~ Water Cooler		30
31	Elevator		32
33	A/C unit		34
35	Elevator Damper		36

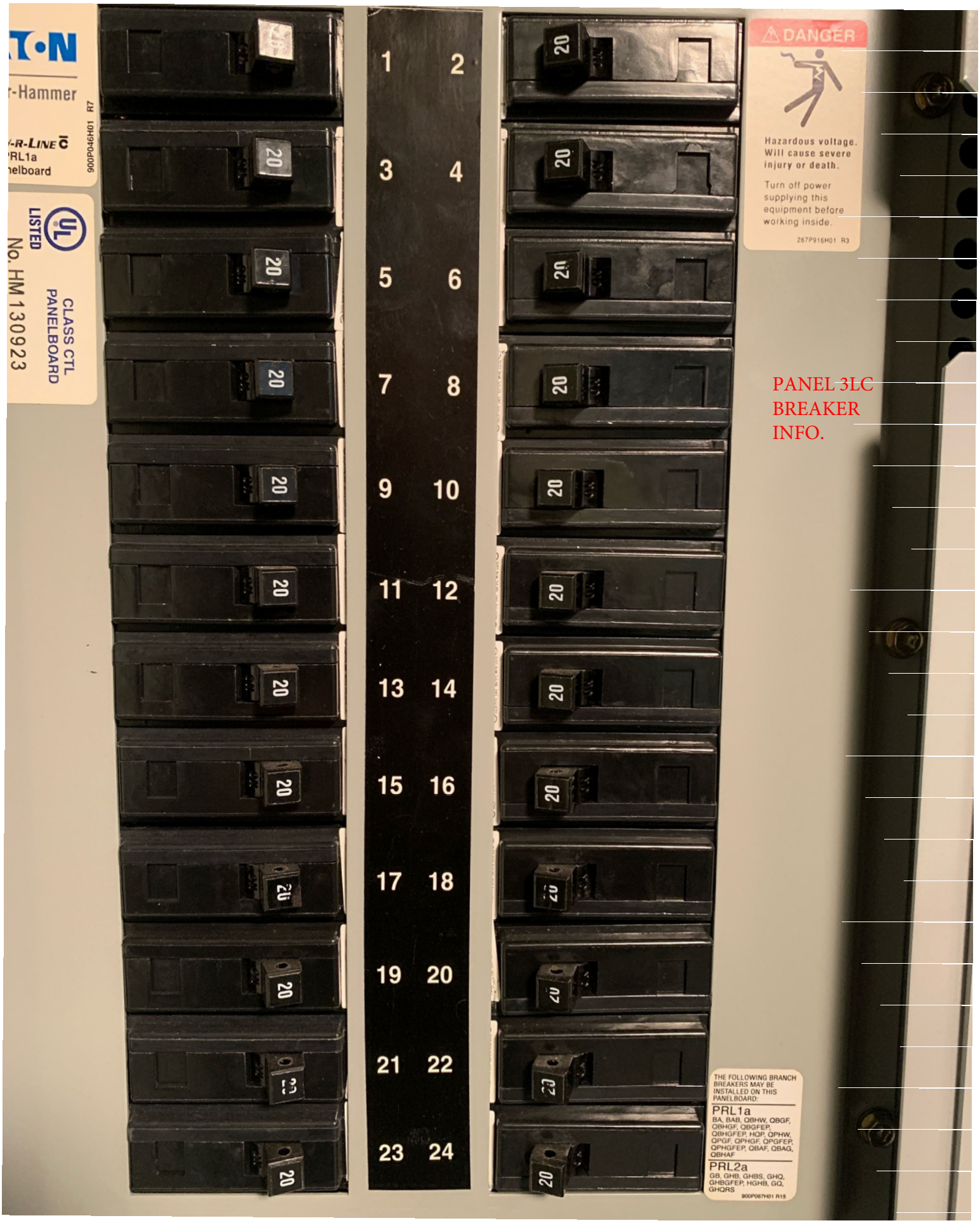

PANEL 3LC
BREAKER
INFO.

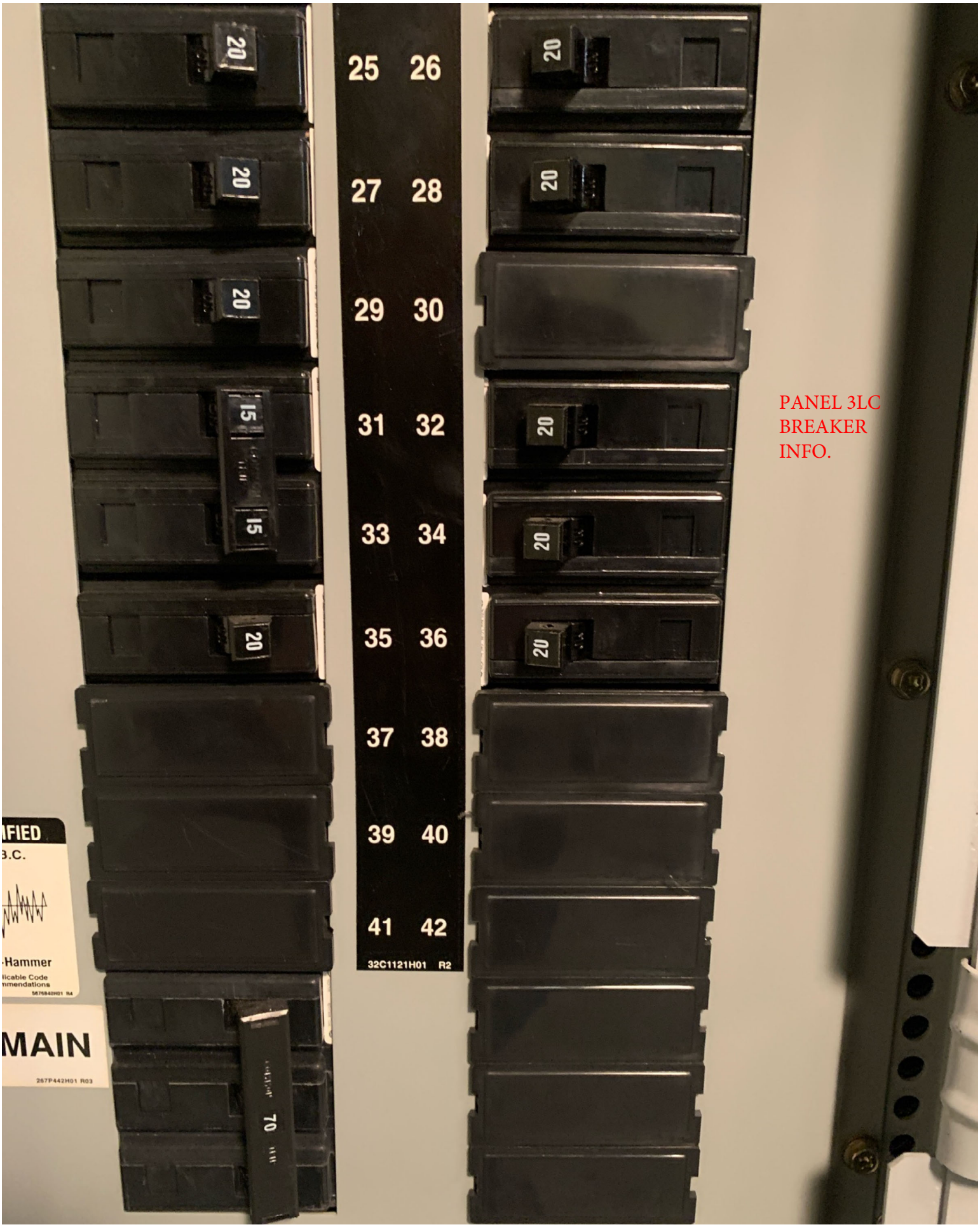

PANEL 3LC
BREAKER
INFO.

APPENDIX B:

EXISTING FIRE ALARM SYSTEM DRAWINGS

This page was intentionally left blank for duplex printing.

GARRISON DAM

PLANT FIRE ALARM SYSTEM

POWER HOUSE, INTAKE BUILDING, SPILLWAY MCC BUILDING, SWITCH YARD BUILDING & TRANSFORMERS

SHEET NO.	DESCRIPTION	DATE
1	TITLE PAGE, SHEET INDEX	01/26/21
1A	BILL OF MATERIAL	06/10/20
1B	SEQUENCE OF OPERATION N1–N8	03/08/19
1C	SEQUENCE OF OPERATION N9 & N10	03/08/19
2	ELECTRICAL DETAIL SHEET	03/08/19
2A	ELECTRICAL DETAIL SHEET	03/08/19
3	AIR SAMPLING SMOKE DETECTION DETAILS	01/26/21
4	POWER HOUSE – SIXTH FLOOR	03/08/19
5	POWER HOUSE – FIFTH FLOOR	03/08/19
6	POWER HOUSE – PARTIAL FOURTH FLOOR	03/08/19
6A	POWER HOUSE – PARTIAL FOURTH FLOOR	03/08/19
6B	POWER HOUSE – PARTIAL FOURTH FLOOR	03/08/19
7	POWER HOUSE – PARTIAL FOURTH FLOOR	03/08/19
7A	POWER HOUSE – PARTIAL FOURTH FLOOR	03/08/19
7B	POWER HOUSE – PARTIAL FOURTH FLOOR	03/08/19
7C	POWER HOUSE – PARTIAL FOURTH FLOOR	03/08/19
8	POWER HOUSE – PARTIAL FOURTH FLOOR	03/08/19
9	POWER HOUSE – PARTIAL THIRD FLOOR	03/08/19
10	POWER HOUSE – PARTIAL THIRD FLOOR	03/08/19
11	POWER HOUSE – PARTIAL THIRD FLOOR	01/26/21
11A	STATION SERVICE MCC ROOM – AIR SAMPLING SMOKE DETECTION	01/26/21
11B	STATION SERVICE MCC ROOM – PIPING ISOMETRIC	01/26/21
11C	COMPUTER ROOM – AIR SAMPLING SMOKE DETECTION	01/26/21
11D	BATTERY ROOM – AIR SAMPLING SMOKE DETECTION	01/26/21
12	PARTIAL CONTROL & POWER TUNNELS	03/08/19
13	PARTIAL CONTROL & POWER TUNNELS	03/08/19
14	POWER HOUSE – SECOND FLOOR	03/08/19
15	POWER HOUSE – FIRST FLOOR	03/08/19
16	SPILLWAY MCC BUILDING – ELEVATION 1825	03/08/19
17	SPILLWAY MCC BUILDING – ELEVATION 1842	03/08/19
18	INTAKE BUILDING	03/08/19
19	SWITCH YARD BUILDING	03/08/19
20	FIRE CONTROL PANEL N1 WIRING DIAGRAM – COMPUTER ROOM	03/08/19
20A	JB5 & POWER SUPPLY #1 WIRING DIAGRAM	03/08/19
20B	N1JB7 & N1JB8 WIRING DIAGRAM	01/26/21
20C	HORN/STROBE WIRING DIAGAM	03/08/19
20D	N1JB9 WIRING DIAGRAM	01/26/21
21	FIRE CONTROL PANEL N2 WIRING DIAGRAM – UNIT 1 TRANSFORMER	03/08/19
21A	N2JB1 WIRING DIAGRAM	03/08/19
21B	N2 POWER SUPPLY WIRING DIAGRAM	03/08/19
22	FIRE CONTROL PANEL N3 WIRING DIAGRAM – UNIT 2 TRANSFORMER	03/08/19
22A	N3JB1 WIRING DIAGRAM	03/08/19
22B	N3 POWER SUPPLY WIRING DIAGRAM	03/08/19
23	FIRE CONTROL PANEL N4 WIRING DIAGRAM – UNIT 3 TRANSFORMER	03/08/19
23A	N4JB1 WIRING DIAGRAM	03/08/19
23B	N4 POWER SUPPLY WIRING DIAGRAM	03/08/19
24	FIRE CONTROL PANEL N5 WIRING DIAGRAM – UNIT 4 TRANSFORMER	03/08/19
24A	N5JB1 WIRING DIAGRAM	03/08/19

A 1 SHEET INDEX

SCALE: NA

SHEET NO.	DESCRIPTION	DATE
24B	N5JB2 WIRING DIAGRAM	03/08/19
24C	N5 POWER SUPPLY WIRING DIAGRAM	03/08/19
25	FIRE CONTROL PANEL N6 WIRING DIAGRAM – UNIT 5 TRANSFORMER	03/08/19
25A	N6JB1 WIRING DIAGRAM	03/08/19
25B	N6JB2 & N6JB3 WIRING DIAGRAM	03/08/19
25C	N6 POWER SUPPLY WIRING DIAGRAM	03/08/19
26	FIRE CONTROL PANEL N7 WIRING DIAGRAM – INTAKE BUILDING	03/08/19
27	FIRE CONTROL PANEL N8 WIRING DIAGRAM – SPILLWAY MCC BUILDING	03/08/19
28	FIRE CONTROL PANEL N9 WIRING DIAGRAM – SWITCH YARD BUILDING	03/08/19
29	FIRE CONTROL PANEL N10 WIRING DIAGRAM – FIRE BOOSTER PUMP	03/08/19
29A	N10JB1 WIRING DIAGRAM	03/08/19
29B	N10JB2 WIRING DIAGRAM	03/08/19
29C	N10 POWER SUPPLY WIRING DIAGRAM	03/08/19
30	BATTERY CALCULATIONS	01/26/21
31	BATTERY CALCULATIONS	03/08/19
32	FIRE CONTROL PANEL NETWORK	03/08/19

B 1 SHEET INDEX CONTINUED

SCALE: NA

REVISIONS

NO.	DESCRIPTION	BY	DATE
5.	ADD FAN/MOTORIZED VENT	LDH	07/13/15
6.	ASBUILT	LDH	08/31/15
7.	ADD TRANSFORMERS 1–5	LDH	03/08/19
8.	AIR SAMPLING DETECTOR UPGRADE	LDH	06/10/20
9.	ASBUILT	LDH	01/26/21

ELECTRIC SCIENTIFIC COMPANY
Engineered Fire Protection Systems
7505 HIGHWAY 7 MINNEAPOLIS, MINNESOTA 55426
TEL. 952-933-4671 FAX 952-933-6541

S:\GARRISON\DAM\FIREALARM

NICET CERTIFICATION # 103683 FIRE ALARM SYSTEMS LEVEL III

DRAWN BY: L. HINZ

NICET CERTIFICATION # 101427 FIRE ALARM SYSTEMS LEVEL IV

CHECKED BY: J. COZZI

GARRISON DAM
PLANT FIRE ALARM SYSTEM
RIVERDALE, NORTH DAKOTA

FIRE DETECTION SYSTEM
TITLE SHEET

JOB NO. 400712

SHEET 1 OF SET

ITEM NO.	QTY.	SYMBOL	PART NUMBER	DESCRIPTION	MANUFACTURER
17					
15	2		SLA-12-10F	BATTERY 10 AH	POWER PATROL
13	5	K	800T-H33A	KEY SWITCH	A&B
12	5	M	HSPS-1T-KL-DA-WP	MANUAL PULL	HARRINGTON
11	5	M	HSPS-6T-KL-DA-EXP	MANUAL PULL	HARRINGTON
10	17		700DC-PK200Z24	RELAY	A&B
9	88	H	12-E27121-000-04	225° HEAT DETECTOR	FENWAL
7	5		4375-1274-C	STROBE	MAXI STROBE
6	5		U-TC	HI/LOW TONE CARD	CPG
5	5		ASHH-24SMR	SPEAKER	CPG
31	4	R	ALB-700-HLT1U24	SINGLE POLE RELAY	
30	2		75-000005-014	SURFACE BOX - WPSBB	
29	2		75-000005-041	STROBE - RTSS WP	FENWAL
28	2	WP	75-000017-001	HORN/STROBE - MTWP	FENWAL
27	1		06-129500-004	72" TUBE (WITH ITEM 11)	FENWAL
26	1	DD	70-403001-152	DUCT HOUSING W/PHOTO DETECTOR	FENWAL
25	2		SLA1156	BATTERY 33 AH	POWER PATROL
24	120	AI	70-407008-001	ADDRESSABLE CONTACT INPUT DEVICE	FENWAL
23	24	AD	70-408004-001	ADDRESSABLE RELAY OUTPUT DEVICE	FENWAL
22	7	MED	FOSTCDRI-SC	SINGLE MODE FIBER CONVERTER	
21	1		74-600000-010	RED TRIM RING (WITH ITEM 20)	FENWAL
20	1	RDM	74-600000-515	REMOTE DISPLAY CONTROL MODULE	FENWAL
19	3	H	70-404001-100	HEAT DETECTOR	FENWAL
18	146		70-400001-100	UNIVERSAL BASE (WITH ITEM 17 & 19)	FENWAL
17	143	P	71-402001-100	PHOTOELECTRIC SMOKE DETECTOR	FENWAL
16	3	F		FILTER, ANALASER (WITH ITEM 9)	
15	14		84-100009-001	SURFACE BOX (WITH ITEM 14)	FENWAL
14	14	M	30-330002-001	MANUAL PULL STATION	FENWAL
13	19	ASM	70-200200-003	AUXILIARY SIGNAL MODULE	FENWAL
12	19		75-000000-001	SURFACE BOX (WITH ITEM 11)	FENWAL
11	19		75-000018-001	HORN/STROBE - MT	FENWAL
10	3	BAT	89-300020-002	SECONDARY BATTERY BACKUP	FENWAL
9	9	AI	70-417008-001	ADDRESSABLE CONTACT INPUT DEVICE	KIDDE-FENWAL
8	3	ASD	VLI-880	VESDA DETECTOR	FIKE
7	3	PS#	89-300020-001	MULTI-ZONE POWER SUPPLY	FENWAL
6	16		SLA12-10F	BATTERY 10 AH (WITH ITEM 5)	POWER PATROL
5	8	PS1	AL1024ULR	AUX POWER SUPPLY	ALTRONIX
4	20		SLAA-12-55NB	BATTERY 55 AH (WITH ITEM 1)	POWER PATROL
3	10	BAT	74-600000-514	BATTERY BOX	FENWAL
2	10		74-600000-009	NETWORK CARD (WITH ITEM 1)	FENWAL
1	10	FAP	74-600000-510	FIRE CONTROL PANEL	FENWAL

A / 1A BILL OF MATERIAL

SCALE: NA

REVISIONS

NO.	DESCRIPTION	BY	DATE
4.	REVISE PER SUBMITTAL	LDH	05/20/15
5.	ADD FAN/MOTORIZED VENT	LDH	07/13/15
6.	ASBUILT	LDH	08/31/15
7.	ADD TRANSFORMERS 1-5	LDH	02/21/19
8.	AIR SAMPLING DETECTOR UPGRADE	LDH	06/10/20

ELECTRIC SCIENTIFIC COMPANY
Engineered Fire Protection Systems
7505 HIGHWAY 7 MINNEAPOLIS, MINNESOTA 55426
TEL. 952-933-4671 FAX 952-933-6541
S:\GARRISON\DAM\FIREALARM

NICET CERTIFICATION # 103683 FIRE ALARM SYSTEMS LEVEL III
DRAWN BY: L. HINZ
NICET CERTIFICATION # 101427 FIRE ALARM SYSTEMS LEVEL IV
CHECKED BY: J. COZZI

GARRISON DAM
PLANT FIRE ALARM UPGRADE - PHASE 1
GARRISON, NORTH DAKOTA

FIRE DETECTION SYSTEM
TITLE SHEET

JOB NO. 400005

SHEET 1A OF SET

FIRE ALARM SYSTEM
PANELS NODE 2-6 - TRANSFORMERS
ALARM OUTPUT MATRIX

ITEM		A	B	C	D	E	F	G	H	I	J	K	L
		FIRE CONTROL PANEL ANNUNCIATES AND DISPLAYS TROUBLE CONDITION	FIRE CONTROL PANEL ANNUNCIATES AND DISPLAYS SUPERVISORY CONDITION	FIRE CONTROL PANEL ANNUNCIATES AND DISPLAYS ALARM CONDITION	REMOTE DISPLAY IN CONTROL ROOM ANNUNCIATES AND DISPLAYS TROUBLE CONDITION	REMOTE DISPLAY IN CONTROL ROOM ANNUNCIATES DISPLAYS SUPERVISORY CONDITION	REMOTE DISPLAY IN CONTROL ROOM ANNUNCIATES AND DISPLAYS ALARM CONDITION	HORN/STROBE ACTIVATES WITHIN THE AFFECTED AREA	SPRINKLER RELEASE VALVE IS ACTIVATED REMAINS ENERGIZED UNTIL PANEL RESET	TRANSFORMER FANS ARE TRIPPED	FIRE PUMP START IS ACTIVATED 45 MIN RUN TIME THEN IS SHUTDOWN	TRANSFORMER SPRAY WATER RELEASE LIGHT IS ACTIVATED ON ANNUNCIATOR BOARD	TRANSFORMER FIRE ALARM PANEL TROUBLES LIGHT IS ACTIVATED ON ANNUNCIATOR BOARD
1	ALARM - HEAT DETECTOR, MANUAL PULL, TRANSFORMER DIFFERENTIAL TRIP OR TRANSFORMER SUDDEN PRESSURE TRIP			X			X	X	X	X	X	X	
2	TROUBLE CONDITION	X			X								X
3	WATERFLOW		X			X		X			X		

A 1B SEQUENCE OF OPERATION - TRANSFORMERS NODE 2-6

SCALE: NA

FIRE ALARM SYSTEM
PANELS NODE 1, NODE 7 & NODE 8
ALARM OUTPUT MATRIX

ITEM		A	B	C	D	E	F	G	H	I
		FIRE CONTROL PANEL ANNUNCIATES AND DISPLAYS TROUBLE CONDITION	FIRE CONTROL PANEL ANNUNCIATES AND DISPLAYS SUPERVISORY CONDITION	FIRE CONTROL PANEL ANNUNCIATES AND DISPLAYS ALARM CONDITION	REMOTE DISPLAY IN CONTROL ROOM ANNUNCIATES AND DISPLAYS TROUBLE CONDITION	REMOTE DISPLAY IN CONTROL ROOM ANNUNCIATES DISPLAYS SUPERVISORY CONDITION	REMOTE DISPLAY IN CONTROL ROOM ANNUNCIATES AND DISPLAYS ALARM CONDITION	HORN/STROBES ACTIVATES		
1	ALARM - SMOKE DETECTOR, HEAT DETECTOR OR MANUAL PULL			X			X	X		
2	TROUBLE CONDITION	X			X					
3	SYSTEM DEVICE IS ISOLATED		X			X				
4										
5										
6										

B 1B SEQUENCE OF OPERATION - NODE 1, NODE 7 & NODE 8

SCALE: NA

REVISIONS

NO.	DESCRIPTION	BY	DATE
1.	ADD TRANSFORMERS 1-5	LDH	03/08/19

ELECTRIC SCIENTIFIC COMPANY
Engineered Fire Protection Systems
7505 HIGHWAY 7 MINNEAPOLIS, MINNESOTA 55426
TEL. 952-933-4671 FAX 952-933-6541
S:\NORTHDAKOTA\GARRISON\DAM\FIREALARM

NICET CERTIFICATION # 103683 FIRE ALARM SYSTEMS LEVEL III

DRAWN BY: L. HINZ

NICET CERTIFICATION # 101427 FIRE ALARM SYSTEMS LEVEL IV

CHECKED BY: J. COZZI

GARRISON DAM
PLANT FIRE ALARM SYSTEM
RIVERDALE, NORTH DAKOTA

SEQUENCE OF OPERATIONS
NODE 1 - NODE 8

JOB NO. 400712

SHEET 1B OF SET

FIRE ALARM SYSTEM
NODE 10 PANEL - FIRE BOOSTER PUMP
ALARM OUTPUT MATRIX

ITEM		A	B	C	D	E	F	G	H
		FIRE CONTROL PANEL ANNUNCIATES AND DISPLAYS TROUBLE CONDITION	FIRE CONTROL PANEL ANNUNCIATES AND DISPLAYS SUPERVISORY CONDITION	FIRE CONTROL PANEL ANNUNCIATES AND DISPLAYS ALARM CONDITION	FIRE PUMP START ACTIVATED	94TSX ACTIVATED (UNIT SPECIFIC)	74TSX-B ACTIVATION (UNIT SPECIFIC)	74TSX-A ACTIVATION (UNIT SPECIFIC)	FIRE PUMP START RELAY DE-ACTIVATED
1	UNIT GENERAL TROUBLE CONDITION	X						X	
2	NODE 10 GENERAL TROUBLE CONDITION	X							
3	UNIT HEAT DETECTOR			X	X	X			
4	UNIT MANUAL RELEASE			X	X	X			
5	UNIT WATER FLOW PRESSURE SWITCH			X	X	X	X		
6	UNIT DIFFERENTIAL TRIP - 87T			X	X	X			
7	UNIT TRANSFORMER LOCKOUT - 86T			X	X	X			
8	NODE 10 SUPERVISORY CONDITION		X						
9	30-SECONDS AFTER FIRE PUMP START								X

B / 1B SEQUENCE OF OPERATION - NODE 10 - FIRE BOOSTER PUMP

SCALE: NA

FIRE ALARM SYSTEM
NODE 9 PANEL - SWITCH YARD BUILDING
ALARM OUTPUT MATRIX

ITEM		A	B	C	D	E	F	G	H	I	J	K
		FIRE CONTROL PANEL ANNUNCIATES AND DISPLAYS TROUBLE CONDITION	FIRE CONTROL PANEL ANNUNCIATES AND DISPLAYS SUPERVISORY CONDITION	FIRE CONTROL PANEL ANNUNCIATES AND DISPLAYS ALARM CONDITION	REMOTE DISPLAY IN CONTROL ROOM ANNUNCIATES AND DISPLAYS TROUBLE CONDITION	REMOTE DISPLAY IN CONTROL ROOM ANNUNCIATES DISPLAYS SUPERVISORY CONDITION	REMOTE DISPLAY IN CONTROL ROOM ANNUNCIATES AND DISPLAYS ALARM CONDITION	HORN/STROBES ACTIVATES	BUILDING AIR HANDLING UNITS SHUTDOWN	SENDS AN ALARM SIGNAL TO THE ACCESS CONTROL PANEL TO UNLOCK THE DOORS	SENDS AN ALARM SIGNAL TO THE SCADA RTU	SENDS A TROUBLE SIGNAL TO THE SCADA RTU
1	ALARM - SMOKE DETECTOR, HEAT DETECTOR OR MANUAL PULL			X			X	X	X	X	X	
2	TROUBLE CONDITION	X			X							X
3	SYSTEM DEVICE IS ISOLATED		X			X						
4												
5												
6												

A / 1B SEQUENCE OF OPERATION - NODE 9 - SWITCH YARD BUILDING

SCALE: NA

REVISIONS

NO.	DESCRIPTION	BY	DATE
1.	ADD TRANSFORMERS 1-5	LDH	03/08/19
2.	ADD NODE 10	LDH	05/19/21

ELECTRIC SCIENTIFIC COMPANY
Engineered Fire Protection Systems
7505 HIGHWAY 7 MINNEAPOLIS, MINNESOTA 55426
TEL. 952-933-4671 FAX 952-933-6541
S:\CORTROMOTA\GARRISONDAM\FIREALARM

NICET CERTIFICATION # 103683 FIRE ALARM SYSTEMS LEVEL III

DRAWN BY: L. HINZ — NICET CERTIFICATION # 101427 FIRE ALARM SYSTEMS LEVEL IV

CHECKED BY: J. COZZI

GARRISON DAM
PLANT FIRE ALARM SYSTEM
RIVERDALE, NORTH DAKOTA

SEQUENCE OF OPERATIONS
NODE 9 AND NODE 10

JOB NO. 400712

SHEET 1C OF SET

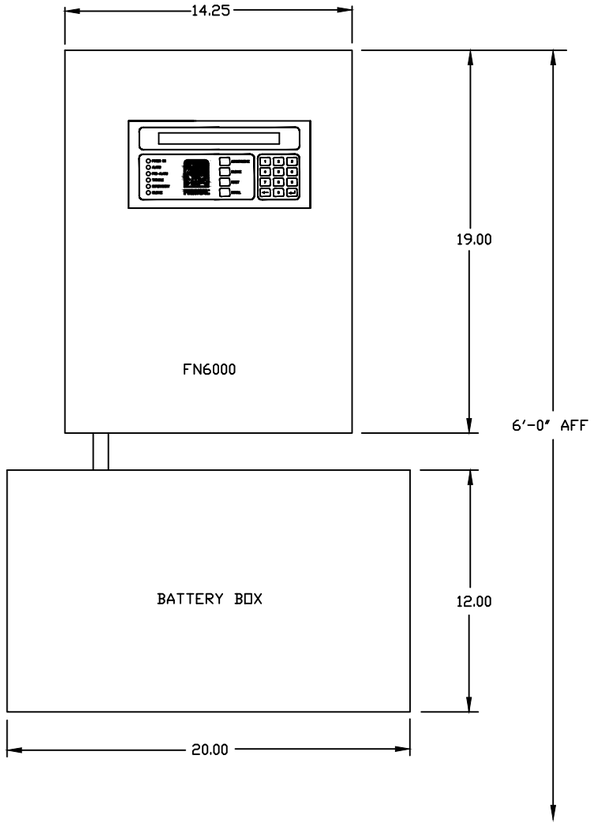

A 2 FN6000 FIRE CONTROL PANEL

SCALE: NTS

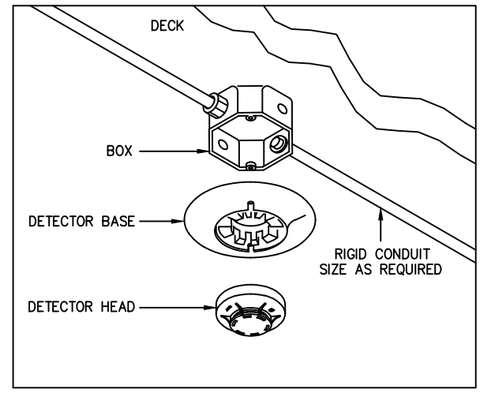

C 2 SMOKE DETECTOR - SURFACE MOUNT

SCALE: NTS

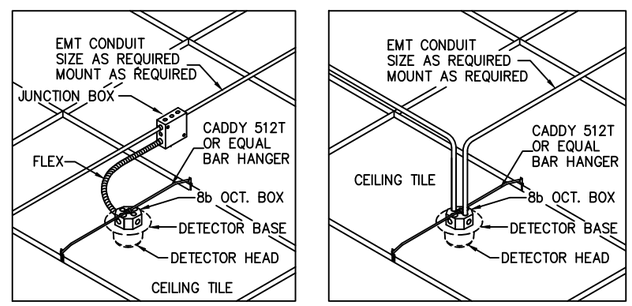

D 2 SMOKE DETECTOR INSTALLATION

SCALE: NTS

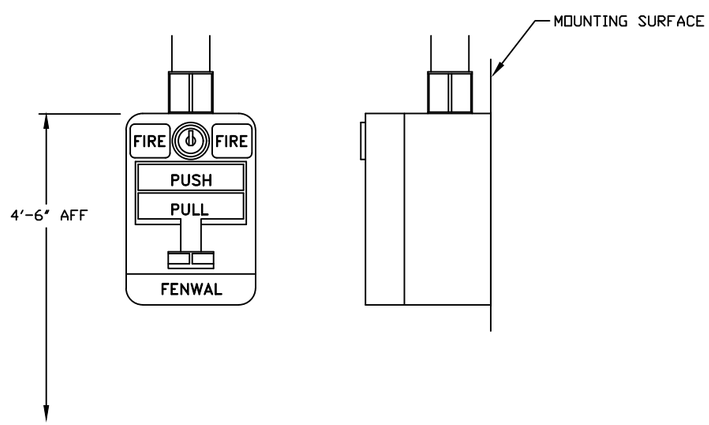

B 2 MANUAL PULL - SURFACE MOUNT

SCALE: NTS

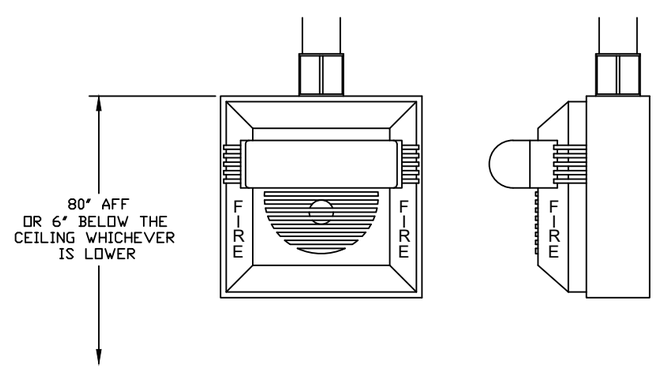

E 2 HORN/STROBE DETAIL

SCALE: NTS

1. THE ELECTRICAL INSTALLATION SHALL COMPLY WITH ALL STATE AND LOCAL CODES, THE LATEST EDITION OF THE NATIONAL ELECTRICAL CODE (INCLUDING ARTICLE 760), AND THE NFPA (NATIONAL FIRE PROTECTION ASSOCIATION) VOLUME 72.
2. THE FIRE CONTROL PANEL REQUIRES A DESIGNATED 120 VAC, 20-AMP SUPPLY CIRCUIT WITH GROUND. CIRCUIT WIRING CANNOT BE IN THE SAME CONDUIT AS THE FIRE ALARM CIRCUIT WIRES.
3. GROUNDING:
   a: A DESIGNATED GROUND WIRE IS REQUIRED TO PROPERLY GROUND THE FIRE CONTROL PANEL.
   b: NON-METALLIC FIELD JUNCTION BOXES THAT HOUSE ANY ELECTRICAL MODULES REQUIRE A GROUNDING STRAP FROM THE CONDUIT TO THE JUNCTION BOX BACKPLATE.
4. CONDUIT REQUIREMENTS:
   a: FIRE ALARM CIRCUIT WIRING HAS TO BE INSTALLED IN A DESIGNATED METALLIC CONDUIT SYSTEM. NO OTHER CIRCUIT WIRING CAN BE MIXED IN THIS CONDUIT.
   b: ARMORED CABLE AND FLEXIBLE CONDUIT ARE ACCEPTABLE IF APPROVED FOR USE.
   c: FIRE ALARM CABLE WITHOUT CONDUIT IS NOT ACCEPTABLE – UNLESS SPECIFICALLY LABELED "FIRE ALARM CABLE" ON THE DRAWINGS AND APPROVED FOR USE.
   d: THE USE OF CABLE TRAYS IS NOT ACCEPTABLE. NO FIRE ALARM CIRCUITS CAN BE RAN IN ELECTRICAL TRAYS UNLESS APPROVED BY ELECTRIC SCIENTIFIC COMPANY AND SPECIFICALLY SHOWN ON THE DRAWINGS.
   e: OTHER CIRCUIT WIRING, SUCH AS 120 VAC SUPPLY, PLC, DCS, OR EQUIPMENT CONTROL CIRCUITS, CANNOT SHARE THE SAME CONDUIT AS THE FIRE ALARM CIRCUITS.
5. CONDUCTOR REQUIREMENTS: WIRE TYPE AND SIZE SHALL BE AS LISTED BELOW. ANY SPECIAL REQUIREMENTS FOR A SPECIFIC AREA WILL BE LISTED ON THE DRAWING. ANY CHANGES HAVE TO BE APPROVED BY ELECTRIC SCIENTIFIC COMPANY.
   A: DATA LOOPS (TO FIELD DEVICES) – 18 AWG MINIMUM, TWISTED PAIR, NON-SHIELDED CABLE (16 AWG IF OVER 1000 FEET, 14 AWG IF OVER 2000 FEET)
   B: STANDARD DETECTION CIRCUITS – 14 AWG SINGLE CONDUTORS.
   c: HORN AND STROBE CIRCUITS – 14 AWG SINGLE CONDUCTORS UNDER 1000 FEET, 12 AWG SINGLE CONDUCTORS OVER 1000 FEET
   d: CONTROL WIRING (DAMPERS, EQUIPMENT SHUTDOWN, ETC.) – SIZED PER CODE.
   e: PANEL 485 NETWORK – 18 AWG, TWISTED PAIR, SHIELDED CABLE WITH DRAIN (THIS CIRCUIT ONLY APPLIES IF TWO FIRE CONTROL PANELS ARE NETWORKED TOGETHER).
6. CONDUCTOR AND CABLE INSULATION SHALL COMPLY WITH THE REQUIREMENTS OF THE PROJECT. MATERIAL USED AND TEMPERATURE RANGES SHALL BE RATED FOR THE APPLICATION.
7. POLARITY AND SEQUENCE OF ALL WIRING AND TERMINATIONS SHALL BE DONE AS SHOWN ON THE DRAWINGS. WIRE COLORS OR TAGS SHALL BE USED TO LABEL THE CIRCUITS.
8. FIELD DEVICES (DETECTORS, MANUAL PULLS, HORNS, STROBES, ETC.) SHALL BE INSTALLED AS SHOWN ON THE DRAWINGS AND DETAILS. SPECIFIC MOUNTING HEIGHTS AND LOCATIONS MUST BE OBSERVED. DETECTORS CANNOT BE INSTALLED ON THE BOTTOM OF BEAMS OR JOISTS UNLESS APPROVED BY ELECTRIC SCIENTIFIC COMPANY.
9. RELAY CONTACTS ARE SHOWN IN THE NORMAL, STANDBY STATE. PANEL AND MODULE DRY CONTACTS ARE RATED 2-AMP 24 VDC. AUXILIARY RELAY CONTACTS ARE RATED 10-AMP, 120 VAC.
10. DO NOT ALTER THE SYSTEM LAYOUT, DEVICE LOCATIONS, WIRING OR DESIGN WITHOUT APPROVAL FROM ELECTRIC SCIENTIFIC COMPANY.
11. ASBUILT DRAWINGS SHALL BE TURNED OVER TO ELECTRIC SCIENTIFIC COMPANY AFTER INSTALLATION.

F 2 ELECTRICAL NOTES

SCALE: NTS

REVISIONS

NO.	DESCRIPTION	BY	DATE
1.	RELEASE FOR APPROVAL & REVIEW	LDH	10/29/10
2.	ADD TRANSFORMERS 1-5	LDH	03/08/19

ELECTRIC SCIENTIFIC COMPANY
Engineered Fire Protection Systems
7505 HIGHWAY 7 MINNEAPOLIS, MINNESOTA 55426
TEL. 952-933-4671 FAX 952-933-6541

S:\GARRISON\DAM\FIREALARM

NICET CERTIFICATION # 103683 FIRE ALARM SYSTEMS LEVEL III
DRAWN BY: L. HINZ
NICET CERTIFICATION # 101427 FIRE ALARM SYSTEMS LEVEL IV
CHECKED BY: J. COZZI

GARRISON DAM
PLANT FIRE ALARM SYSTEM
RIVERDALE, NORTH DAKOTA

DETAIL SHEET
ELECTRICAL DETAILS

JOB NO. 400712

SHEET 2 OF SET

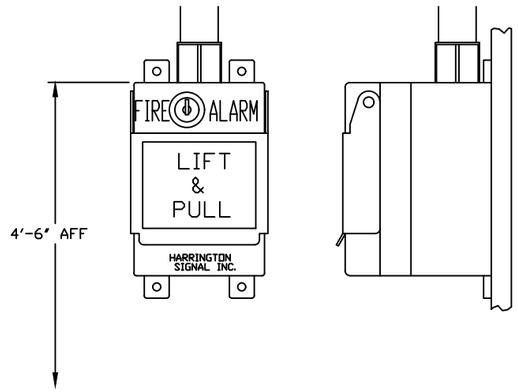

A 2A MANUAL PULL DETAIL

SCALE: NTS

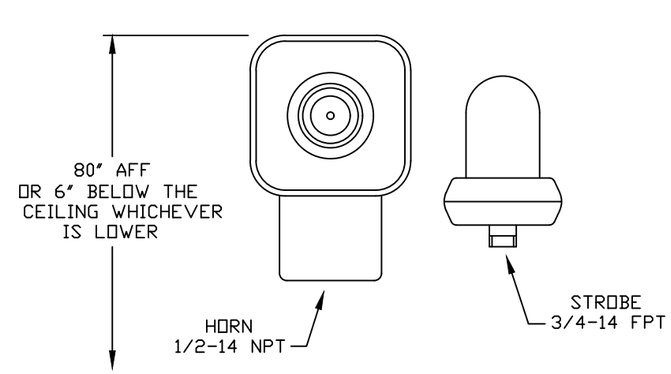

C 2A HORN/STROBE DETAIL

SCALE: NTS

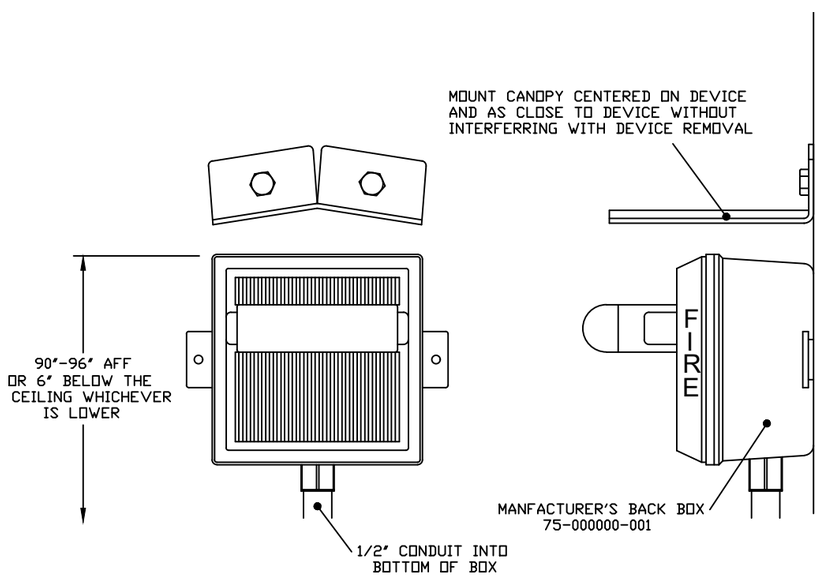

B 2A HORN/STROBE DETAIL - OUTSIDE

SCALE: NTS

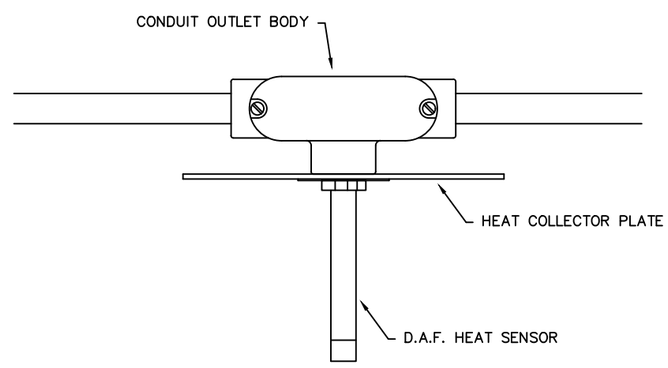

D 2A HEAT DETECTOR DETAIL

SCALE: NTS

REVISIONS

NO.	DESCRIPTION	BY	DATE
1.	ADD TRANSFORMERS 1-5	LDH	03/08/19

ELECTRIC SCIENTIFIC COMPANY
Engineered Fire Protection Systems
7505 HIGHWAY 7 MINNEAPOLIS, MINNESOTA 55426
TEL. 952-933-4671 FAX 952-933-6541

S:\NORTHDAKOTA\GARRISONDAM\FIREALARM

NICET CERTIFICATION # 103683
FIRE ALARM SYSTEMS LEVEL III

DRAWN BY: L. HINZ

NICET CERTIFICATION # 101427
FIRE ALARM SYSTEMS LEVEL IV

CHECKED BY: J. COZZI

GARRISON DAM
PLANT FIRE ALARM SYSTEM
RIVERDALE, NORTH DAKOTA

DETAIL SHEET
ELECTRICAL DETAILS

JOB NO. 400712

SHEET 2A OF SET

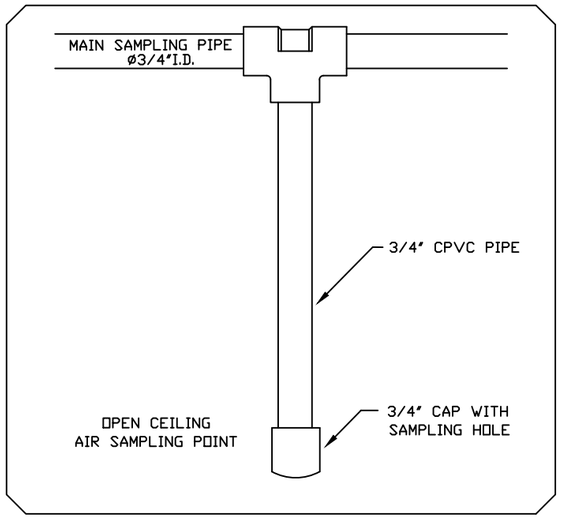

A 3 SAMPLING POINT DETAIL - OPEN CEILING

SCALE: NTS

A. PIPE SEGMENTS MAY BE SLIGHTLY ADJUSTED IN LENGTH AND LIMITED ELBOWS CAN BE ADDED TO FACILITATE INSTALLATION AROUND OBSTACLES. BUT NEVER ADD ANY ADDITIONAL "TEE" FITTINGS OR CHANGE THE PIPING LAYOUT WITHOUT APPROVAL FROM ELECTRIC SCIENTIFIC COMPANY.

B. ALL PNEUMATIC TUBING USED FOR WHIPS TO DROPPED CEILING POINTS OR CABINET POINTS SHALL BE LESS THAN 12'-0" LONG. CUT THE TUBING TO LENGTH TO ALLOW SLACK FOR POINT REMOVAL AND TO NOT CREATE TUBING KINKS. THE TYPICAL WHIP IS 4'-0" TO 8'-0" LONG.

C. GUIDELINES FOR THIS SYSTEM ARE BASED ON THE NFPA AND FENWAL SNIFF CALCULATION PROGRAM TO PROVIDE THE OPTIMUM DRAW RATE AT EACH SAMPLING POINT WITH A MAXIMUM TRANSPORT TIME OF 120 SECONDS. ALTERATIONS OF THE PIPE NETWORK AND AIR SAMPLING HOLES SHALL NOT BE DONE WITHOUT APPROVAL FROM ELECTRIC SCIENTIFIC COMPANY.

D. THE SAMPLING SYSTEM PIPING SHALL BE CONSPICUOUSLY IDENTIFIED AS "SMOKE DETECTOR SAMPLING TUBE - DO NOT DISTURB" AS FOLLOWS:
   1. AT CHANGES IN DIRECTION OR BRANCHES OF PIPING
   2. AT EACH SIDE OF PENETRATIONS OF WALLS, FLOORS OR OTHER BARRIERS.
   3. AT INTERVALS ON PIPING THAT PROVIDE VISIBILITY WITHIN THE SPACE, BUT NO GREATER THAN 20 FEET.

D 3 AIR SAMPLING NOTES

SCALE: NTS

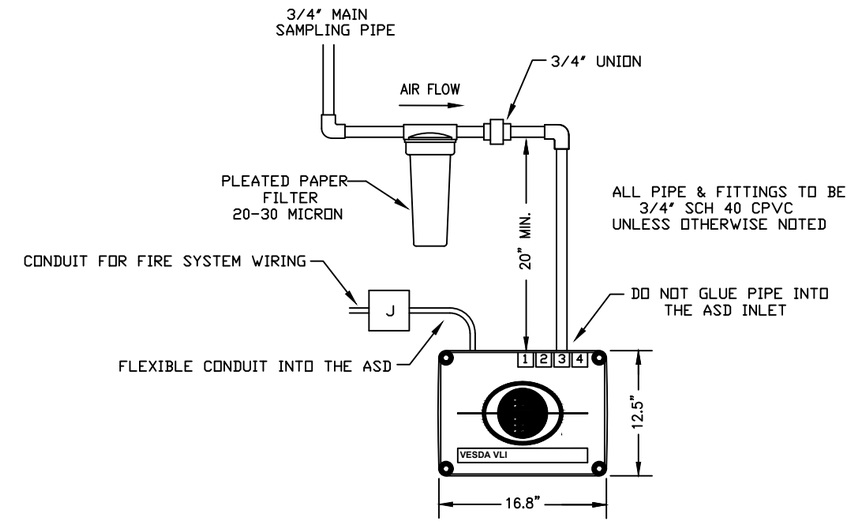

C 3 DETECTOR DETAIL

SCALE: NTS

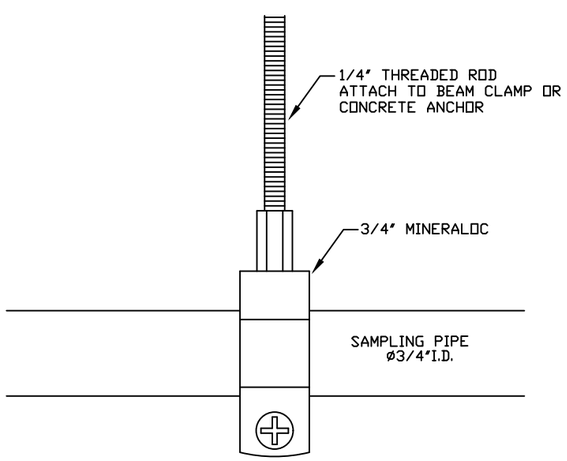

B 3 PIPE MOUNTING DETAIL

SCALE: NTS

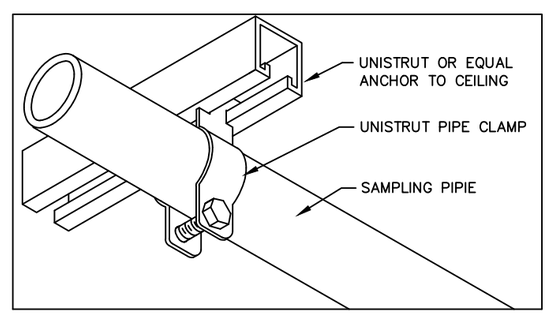

E 3 PIPE MOUNTING DETAIL

SCALE: NTS

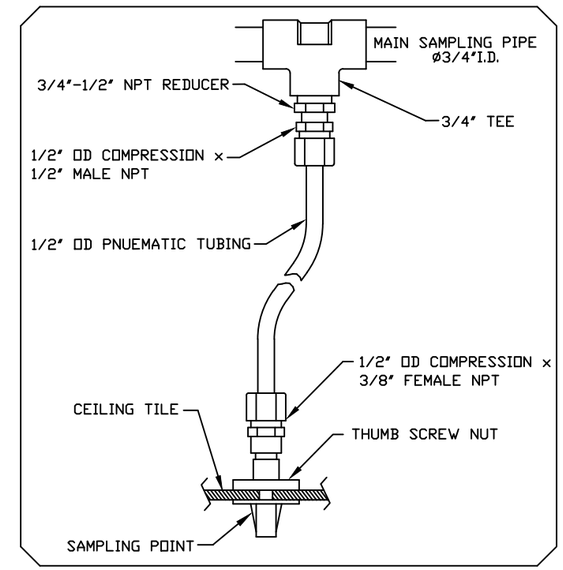

F 3 SAMPLING POINT DETAIL

SCALE: NTS

REVISIONS

NO.	DESCRIPTION	BY	DATE
1.	RELEASE FOR APPROVAL & REVIEW	LDH	10/29/10
2.	ADD TRANSFORMERS 1-5	LDH	03/08/19
3.	AIR SAMPLING DETECTOR UPGRADE	LDH	06/10/20
4.	ASBUILT	LDH	01/26/21

ELECTRIC SCIENTIFIC COMPANY
Engineered Fire Protection Systems
7505 HIGHWAY 7 MINNEAPOLIS, MINNESOTA 55426
TEL. 952-933-4671 FAX 952-933-6541

S:\CAD\RESCAD\AF\FIREALARM

NICET CERTIFICATION # 103683 FIRE ALARM SYSTEMS LEVEL III
DRAWN BY: L. HINZ
NICET CERTIFICATION # 101427 FIRE ALARM SYSTEMS LEVEL IV
CHECKED BY: J. COZZI

GARRISON DAM
PLANT FIRE ALARM SYSTEM
GRIVERDALE, NORTH DAKOTA

AIR SAMPLING SMOKE DETECTION
DETAIL SHEET

JOB NO. 400112

SHEET 3 OF SET

ASM	AUXILIARY SIGNAL MODULE
JB6	EQUIPMENT ENCLOSURE
P	PHOTOELECTRIC SMOKE DETECTOR
M	MANUAL PULL STATION
	HORN/STROBE

B/4 DEVICE LEGEND

SCALE: NA

A = 1 - 16/2 TWISTED/NON-SHIELDED PAIR
B = 1 - 18/2 TWISTED/SHIELDED PAIR
C = 2 - 16/2 TWISTED/NON-SHIELDED PAIR
D = 2 - 18/2 TWISTED/SHIELDED PAIR
E = 1 - 16/4 FIRE ALARM CABLE
G = 1 - #12 AWG THHN GREEN GROUND CONDUCTOR
1 = 3 - #12 AWG (120 VAC & GND)
2 = 2 - #12 AWG THHN
3 = 4 - #12 AWG THHN
4 = 6 - #12 AWG THHN
5 = 8 - #12 AWG THHN
6 = 10 - #12 AWG THHN
7 = 12 - #12 AWG THHN
8 = 14 - #12 AWG THHN
9 = 30 - #12 AWG THHN
10 = 54 - #12 AWG THHN
11 = 60 - #12 AWG THHN
12 = 20 - #12 AWG THHN

C/4 WIRE SCHEDULE

SCALE: NA

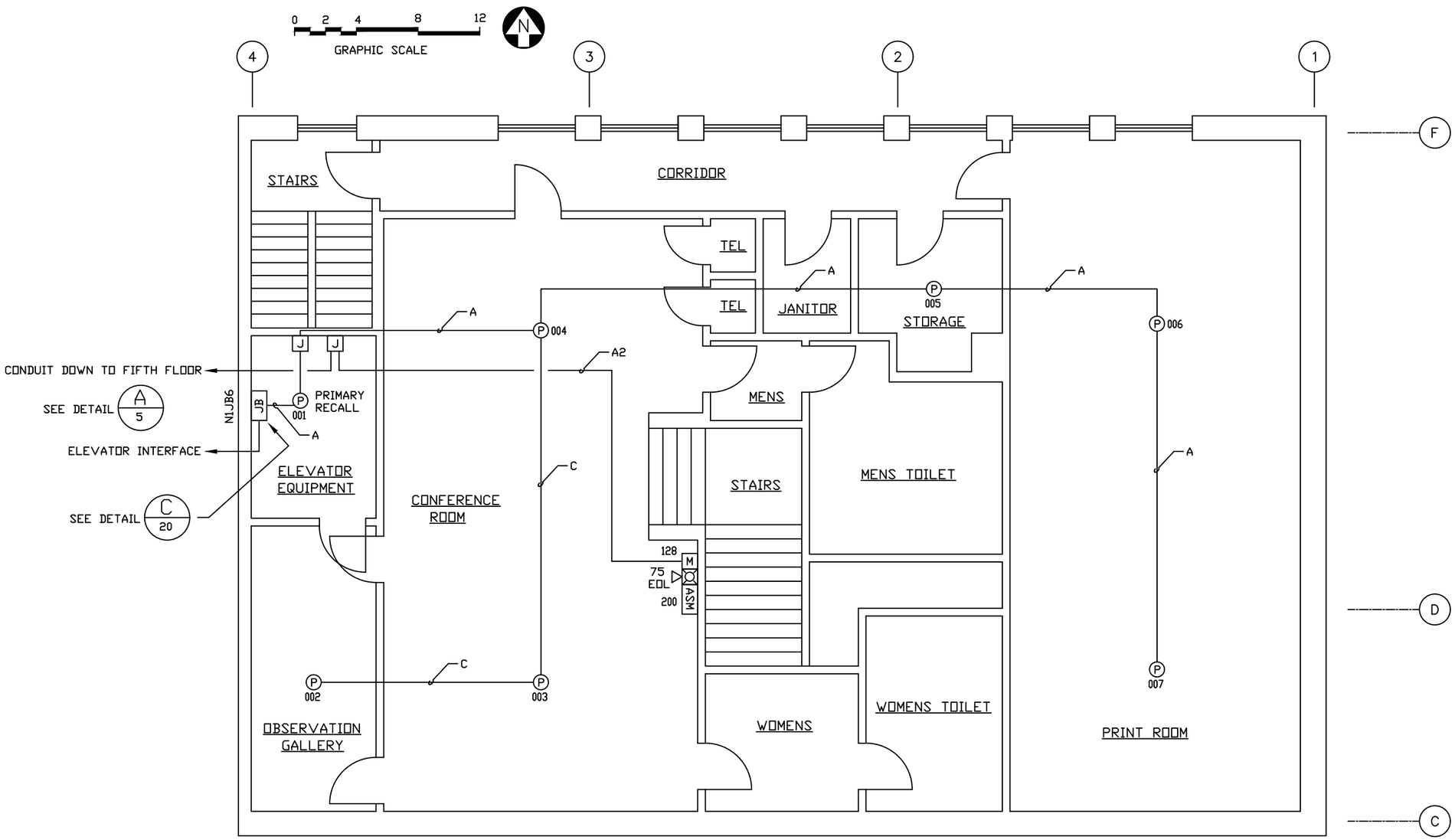

A/4 POWER HOUSE - SIXTH FLOOR

SCALE: 1/8"=1'-0"

REVISIONS

NO.	DESCRIPTION	BY	DATE
2.	ASBUILT	LDH	05/26/11
3.	ADD ELEVATOR RECALL	LDH	01/26/15
4.	REVISE PER SUBMITTAL	LDH	05/20/15
5.	ASBUILT	LDH	08/31/15
6.	ADD TRANSFORMERS 1-5	LDH	03/08/19

ELECTRIC SCIENTIFIC COMPANY
Engineered Fire Protection Systems
7505 HIGHWAY 7 MINNEAPOLIS, MINNESOTA 55426
TEL. 952-933-4671 FAX 952-933-6541

S:\NORTHDAKOTA\GARRISONDAM\FIREALARM

NICET CERTIFICATION # 103683
FIRE ALARM SYSTEMS LEVEL III

DRAWN BY: L. HINZ

NICET CERTIFICATION # 101427
FIRE ALARM SYSTEMS LEVEL IV

CHECKED BY: J. COZZI

GARRISON DAM
PLANT FIRE ALARM SYSTEM
RIVERDALE, NORTH DAKOTA

ELECTRICAL PLAN VIEW
POWER HOUSE - SIXTH FLOOR

JOB NO. 400712

SHEET 4 OF SET

ASM	AUXILIARY SIGNAL MODULE
P	PHOTOELECTRIC SMOKE DETECTOR
H	HEAT DETECTOR
M	MANUAL PULL STATION
	HORN/STROBE

B/5 DEVICE LEGEND

SCALE: NA

A = 1 - 16/2 TWISTED/NON-SHIELDED PAIR
B = 1 - 18/2 TWISTED/SHIELDED PAIR
C = 2 - 16/2 TWISTED/NON-SHIELDED PAIR
D = 2 - 18/2 TWISTED/SHIELDED PAIR
E = 1 - 16/4 FIRE ALARM CABLE
G = 1 - #12 AWG THHN GREEN GROUND CONDUCTOR
1 = 3 - #12 AWG (120 VAC & GND)
2 = 2 - #12 AWG THHN
3 = 4 - #12 AWG THHN
4 = 6 - #12 AWG THHN
5 = 8 - #12 AWG THHN
6 = 10 - #12 AWG THHN
7 = 12 - #12 AWG THHN
8 = 14 - #12 AWG THHN
9 = 30 - #12 AWG THHN
10 = 54 - #12 AWG THHN
11 = 60 - #12 AWG THHN
12 = 20 - #12 AWG THHN

C/5 WIRE SCHEDULE

SCALE: NA

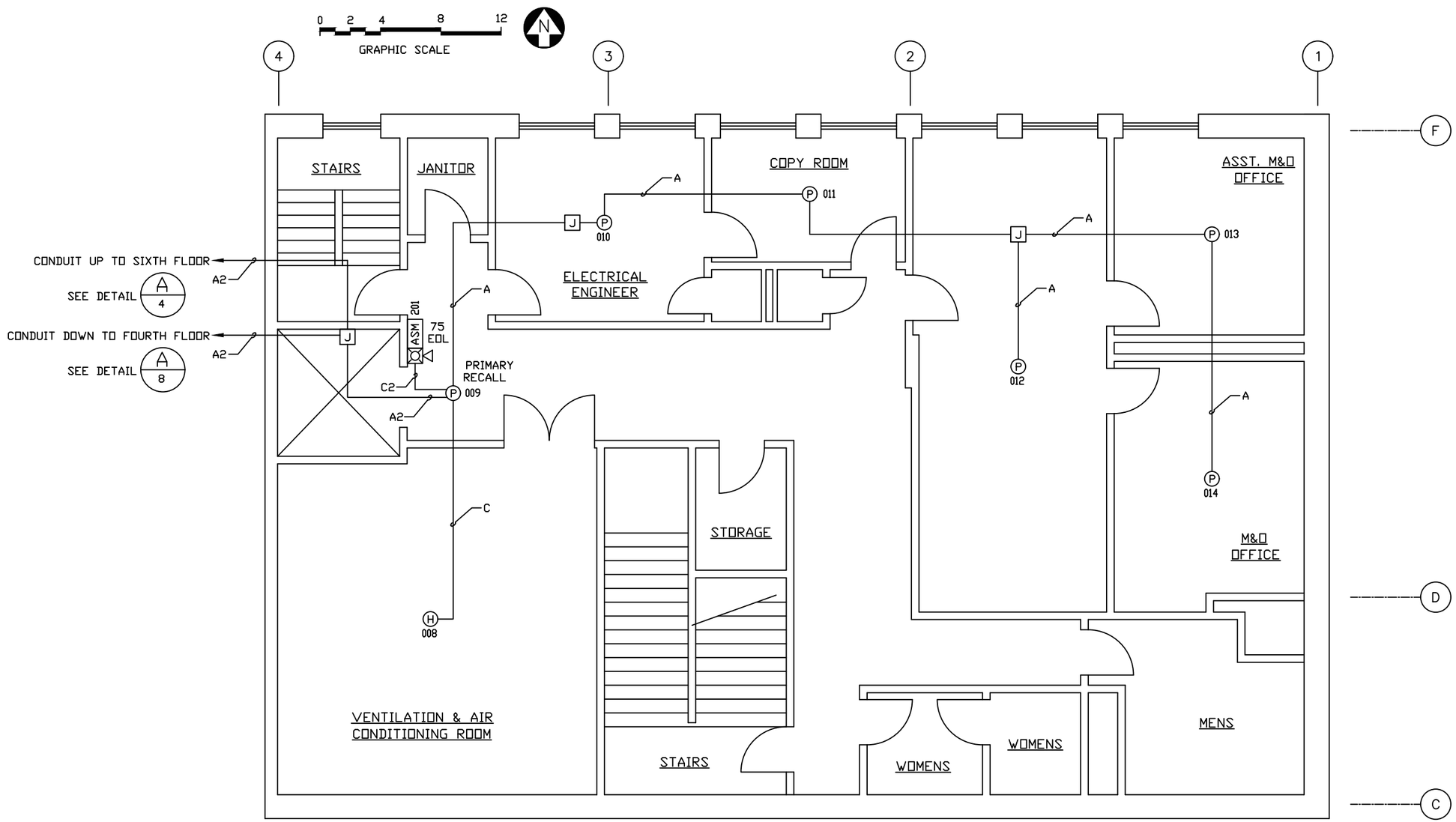

A/5 POWER HOUSE - FIFTH FLOOR

SCALE: 1/8"=1'-0"

REVISIONS

NO.	DESCRIPTION	BY	DATE
1.	RELEASE FOR APPROVAL & REVIEW	LDH	
2.	ASBUILT	LDH	05/26/11
3.	REVISE PER SUBMITTAL	LDH	05/20/15
4.	ASBUILT	LDH	08/31/15
5.	ADD TRANSFORMERS 1-5	LDH	03/08/19

ELECTRIC SCIENTIFIC COMPANY
Engineered Fire Protection Systems
7505 HIGHWAY 7 MINNEAPOLIS, MINNESOTA 55426
TEL. 952-933-4671 FAX 952-933-6541

S:\CAD\RESCAD\AF\FIREALARM

NICET CERTIFICATION # 103683 FIRE ALARM SYSTEMS LEVEL III
DRAWN BY: L. HINZ
NICET CERTIFICATION # 101427 FIRE ALARM SYSTEMS LEVEL IV
CHECKED BY: J. COZZI

GARRISON DAM
PLANT FIRE ALARM SYSTEM
RIVERDALE, NORTH DAKOTA

ELECTRICAL PLAN VIEW
POWER HOUSE - FIFTH FLOOR

JOB NO. 400712

SHEET 5 OF SET

M MANUAL PULL STATION

HORN

STROBE

B 6 DEVICE LEGEND

SCALE: NA

A = 1 - 16/2 TWISTED/NON-SHIELDED PAIR
B = 1 - 18/2 TWISTED/SHIELDED PAIR
C = 2 - 16/2 TWISTED/NON-SHIELDED PAIR
D = 2 - 18/2 TWISTED/SHIELDED PAIR
E = 2 - #12 AWG THHN
F = 4 - #12 AWG THHN
G = 1 - #12 AWG THHN GREEN GROUND CONDUCTOR
H = 20 - #12 AWG THHN
1 = 3 - #12 AWG (120 VAC & GND)
2 = 2 - #14 AWG THHN
3 = 4 - #14 AWG THHN
4 = 6 - #14 AWG THHN
5 = 8 - #14 AWG THHN
6 = 10 - #14 AWG THHN
7 = 12 - #14 AWG THHN
8 = 14 - #14 AWG THHN
9 = 30 - #14 AWG THHN
10 = 54 - #14 AWG THHN
11 = 56 - #14 AWG THHN

C 6 WIRE SCHEDULE

SCALE: NA

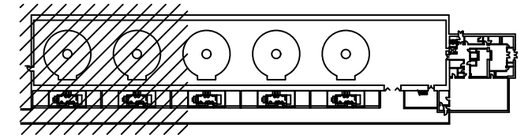

KEY

MATCH LINE
SEE SHEET 7

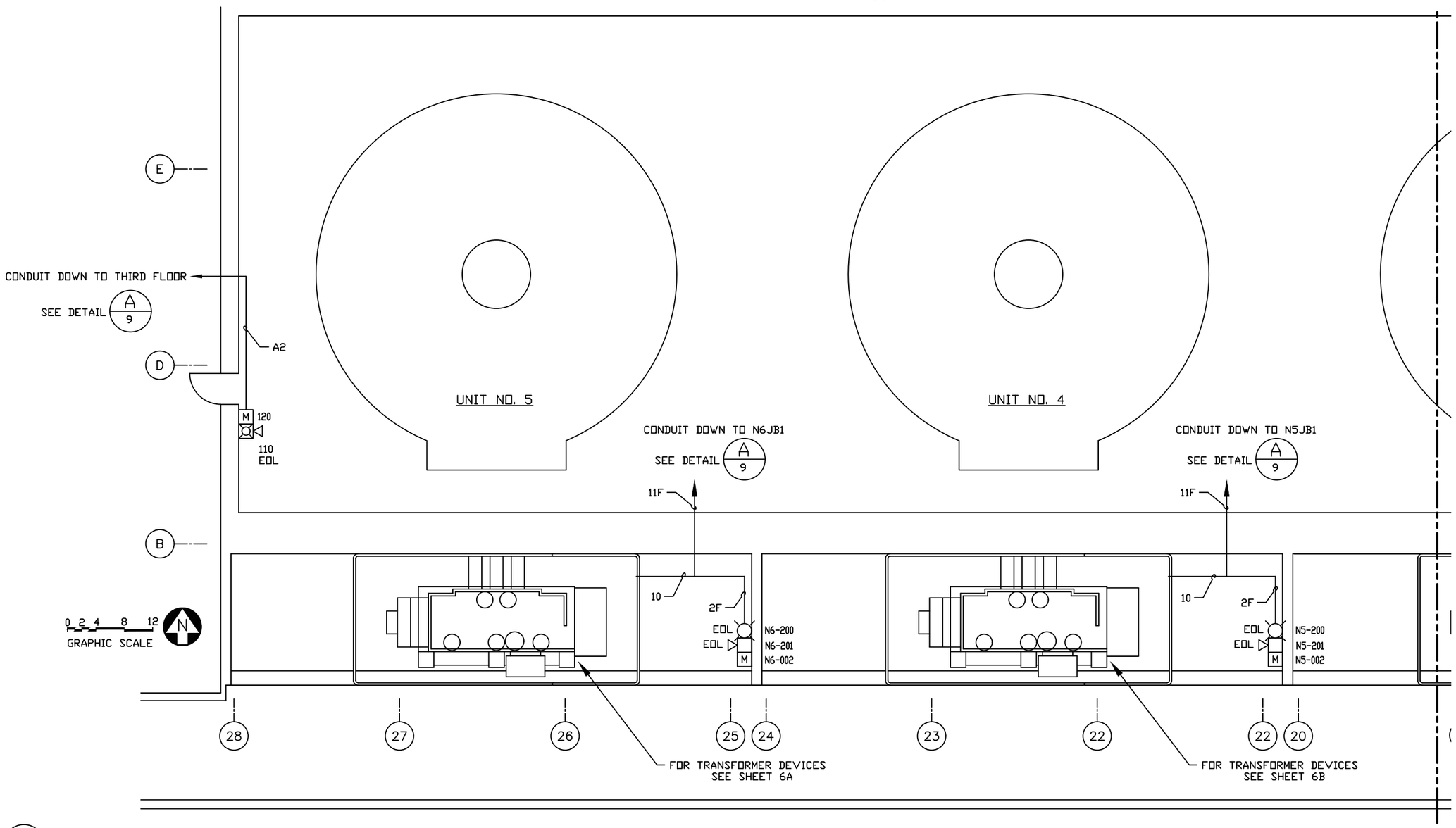

A 6 POWER HOUSE - PARTIAL FOURTH FLOOR

SCALE: 1/16"=1'-0"

REVISIONS

NO.	DESCRIPTION	BY	DATE
1.	RELEASE FOR APPROVAL & REVIEW	LDH	10/29/10
2.	ASBUILT	LDH	05/26/11
3.	ADD TRANSFORMERS 1-5	LDH	03/08/19

ELECTRIC SCIENTIFIC COMPANY
Engineered Fire Protection Systems
7505 HIGHWAY 7 MINNEAPOLIS, MINNESOTA 55426
TEL. 952-933-4671 FAX 952-933-6541

S:\CAD\REDONDAN\FIREALARM

NICET CERTIFICATION # 103683
FIRE ALARM SYSTEMS LEVEL III

DRAWN BY: L. HINZ
NICET CERTIFICATION # 101427
FIRE ALARM SYSTEMS LEVEL IV

CHECKED BY: J. COZZI

GARRISON DAM
PLANT FIRE ALARM SYSTEM
RIVERDALE, NORTH DAKOTA

ELECTRICAL PLAN VIEW
POWER HOUSE - PARTIAL FOURTH FLOOR

JOB NO. 400117

SHEET 6 OF SET

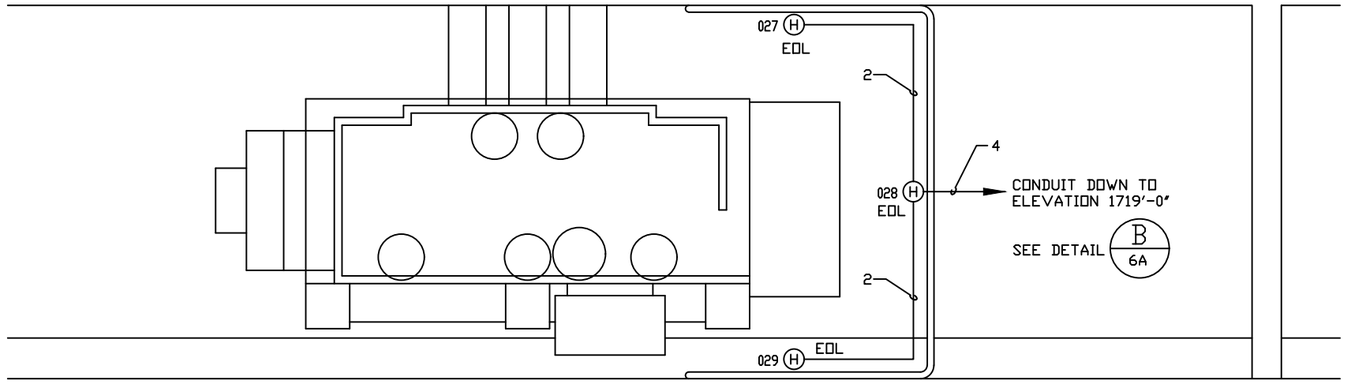

A 6A UNIT 5 TRANSFORMER ELEVATION 1726'-0"

SCALE: 1/8"=1'-0"

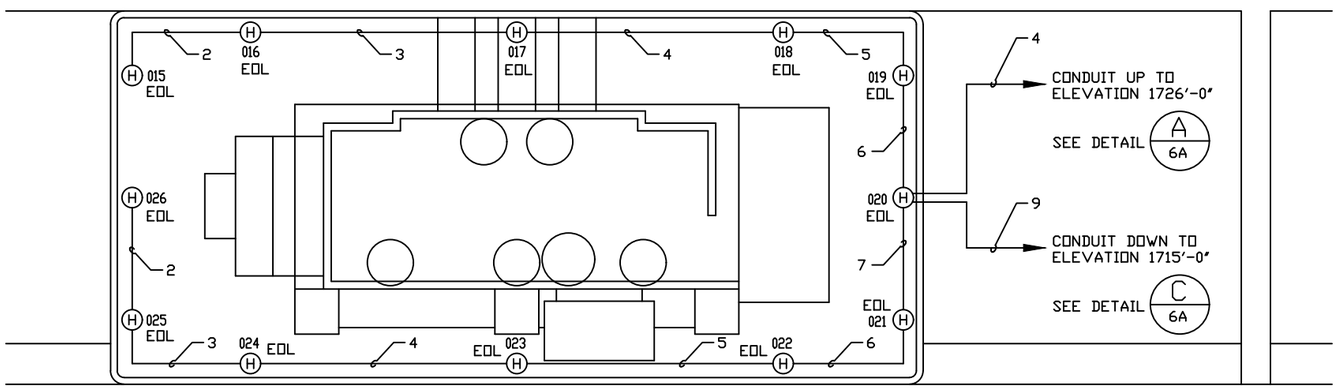

B 6A UNIT 5 TRANSFORMER ELEVATION 1719'-0"

SCALE: 1/8"=1'-0"

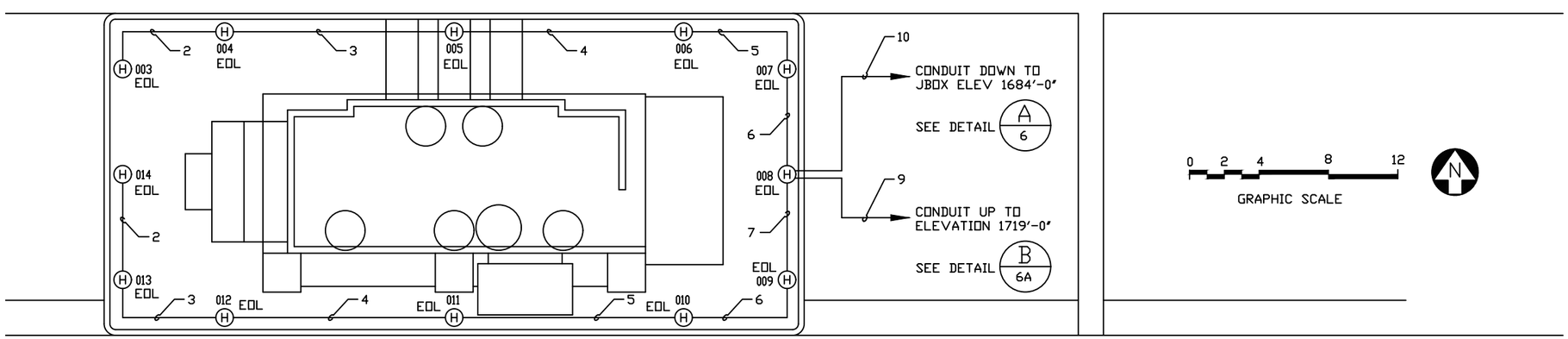

C 6A UNIT 5 TRANSFORMER ELEVATION 1715'-0"

SCALE: 1/8"=1'-0"

H HEAT COLLECTOR W/COLLECTOR PALTE

D 6A DEVICE LEGEND

SCALE: NA

A = 1 - 16/2 TWISTED/NON-SHIELDED PAIR
B = 1 - 18/2 TWISTED/SHIELDED PAIR
C = 2 - 16/2 TWISTED/NON-SHIELDED PAIR
D = 2 - 18/2 TWISTED/SHIELDED PAIR
E = 2 - #12 AWG THHN
F = 4 - #12 AWG THHN
G = 1 - #12 AWG THHN GREEN GROUND CONDUCTOR
H = 20 - #12 AWG THHN
1 = 3 - #12 AWG (120 VAC & GND)
2 = 2 - #14 AWG THHN
3 = 4 - #14 AWG THHN
4 = 6 - #14 AWG THHN
5 = 8 - #14 AWG THHN
6 = 10 - #14 AWG THHN
7 = 12 - #14 AWG THHN
8 = 14 - #14 AWG THHN
9 = 30 - #14 AWG THHN
10 = 54 - #14 AWG THHN
11 = 56 - #14 AWG THHN

E 6A WIRE SCHEDULE

SCALE: NA

REVISIONS

NO.	DESCRIPTION	BY	DATE
1.	ADD TRANSFORMERS 1-5	LDH	03/08/19

ELECTRIC SCIENTIFIC COMPANY
Engineered Fire Protection Systems
7505 HIGHWAY 7 MINNEAPOLIS, MINNESOTA 55426
TEL. 952-933-4671 FAX 952-933-6541

S:\GARRISON\DAM

NICET CERTIFICATION # 103683 FIRE ALARM SYSTEMS LEVEL III
DRAWN BY: L. HINZ
NICET CERTIFICATION # 101427 FIRE ALARM SYSTEMS LEVEL IV
CHECKED BY: J. COZZI

GARRISON DAM
PLANT FIRE ALARM SYSTEM
RIVERDALE, NORTH DAKOTA

ELECTRICAL PLAN VIEW
UNIT 5 TRANSFORMER DETAIL

JOB NO. 400117

SHEET 6A OF SET

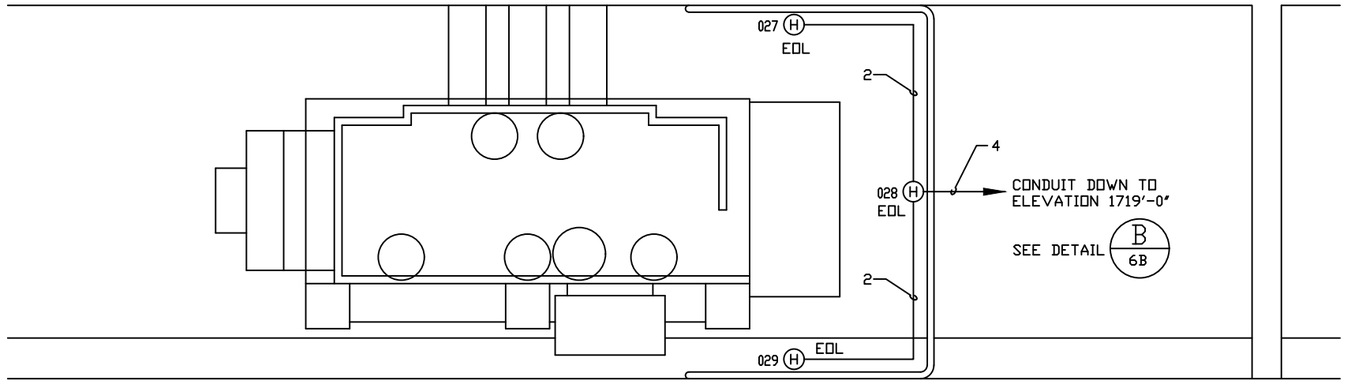

A 6B UNIT 4 TRANSFORMER ELEVATION 1726'-0"

SCALE: 1/8"=1'-0"

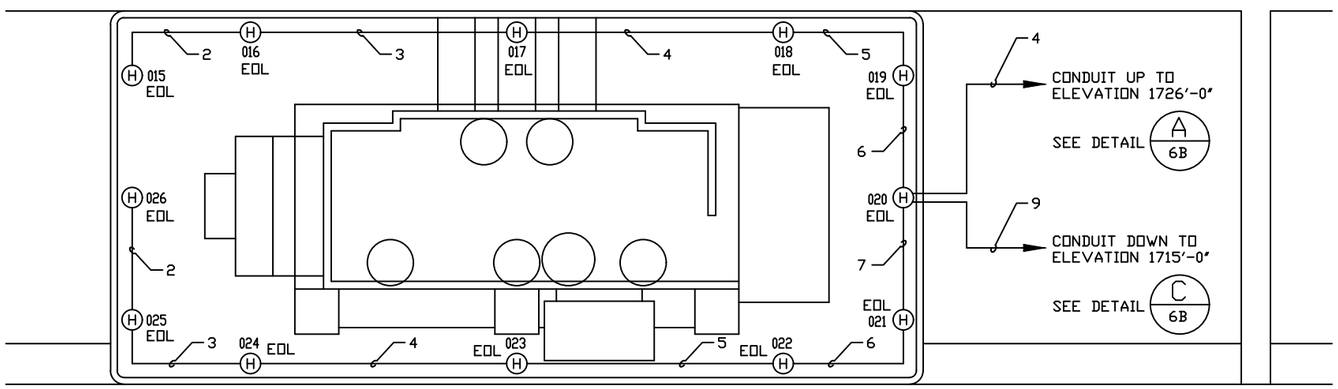

B 6B UNIT 4 TRANSFORMER ELEVATION 1719'-0"

SCALE: 1/8"=1'-0"

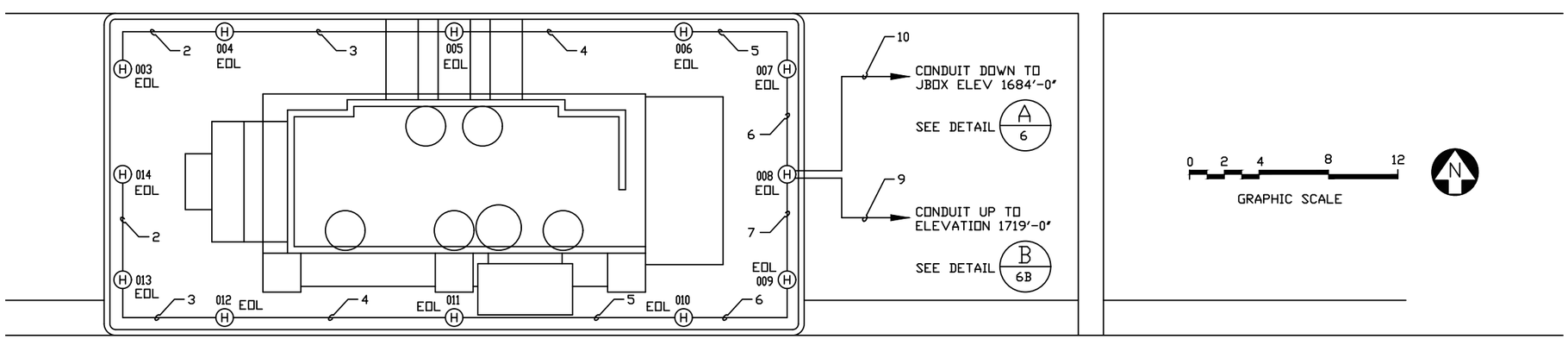

C 6B UNIT 4 TRANSFORMER ELEVATION 1715'-0"

SCALE: 1/8"=1'-0"

H HEAT COLLECTOR W/COLLECTOR PALTE

D 6B DEVICE LEGEND

SCALE: NA

A = 1 - 16/2 TWISTED/NON-SHIELDED PAIR
B = 1 - 18/2 TWISTED/SHIELDED PAIR
C = 2 - 16/2 TWISTED/NON-SHIELDED PAIR
D = 2 - 18/2 TWISTED/SHIELDED PAIR
E = 2 - #12 AWG THHN
F = 4 - #12 AWG THHN
G = 1 - #12 AWG THHN GREEN GROUND CONDUCTOR
H = 20 - #12 AWG THHN
1 = 3 - #12 AWG (120 VAC & GND)
2 = 2 - #14 AWG THHN
3 = 4 - #14 AWG THHN
4 = 6 - #14 AWG THHN
5 = 8 - #14 AWG THHN
6 = 10 - #14 AWG THHN
7 = 12 - #14 AWG THHN
8 = 14 - #14 AWG THHN
9 = 30 - #14 AWG THHN
10 = 54 - #14 AWG THHN
11 = 56 - #14 AWG THHN

E 6B WIRE SCHEDULE

SCALE: NA

REVISIONS

NO.	DESCRIPTION	BY	DATE
1.	ADD TRANSFORMERS 1-5	LDH	03/08/19

ELECTRIC SCIENTIFIC COMPANY
Engineered Fire Protection Systems
7505 HIGHWAY 7 MINNEAPOLIS, MINNESOTA 55426
TEL. 952-933-4671 FAX 952-933-6541

S:\CAD\RESCNCAD\UNIT4

NICET CERTIFICATION # 103683 FIRE ALARM SYSTEMS LEVEL III
DRAWN BY: L. HINZ
NICET CERTIFICATION # 101427 FIRE ALARM SYSTEMS LEVEL IV
CHECKED BY: J. COZZI

GARRISON DAM
PLANT FIRE ALARM SYSTEM
RIVERDALE, NORTH DAKOTA

ELECTRICAL PLAN VIEW
UNIT 4 TRANSFORMER DETAIL

JOB NO. 400117

SHEET 6B OF SET

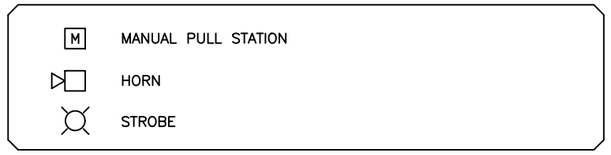

B 7 DEVICE LEGEND

SCALE: NA

A = 1 - 16/2 TWISTED/NON-SHIELDED PAIR
B = 1 - 18/2 TWISTED/SHIELDED PAIR
C = 2 - 16/2 TWISTED/NON-SHIELDED PAIR
D = 2 - 18/2 TWISTED/SHIELDED PAIR
E = 2 - #12 AWG THHN
F = 4 - #12 AWG THHN
G = 1 - #12 AWG THHN GREEN GROUND CONDUCTOR
H = 20 - #12 AWG THHN
J = 8 - #12 AWG THHN
1 = 3 - #12 AWG (120 VAC & GND)
2 = 2 - #14 AWG THHN
3 = 4 - #14 AWG THHN
4 = 6 - #14 AWG THHN
5 = 8 - #14 AWG THHN
6 = 10 - #14 AWG THHN
7 = 12 - #14 AWG THHN
8 = 14 - #14 AWG THHN
9 = 30 - #14 AWG THHN
10 = 54 - #14 AWG THHN
11 = 56 - #14 AWG THHN

C 7 WIRE SCHEDULE

SCALE: NA

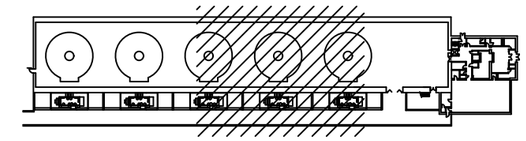

KEY

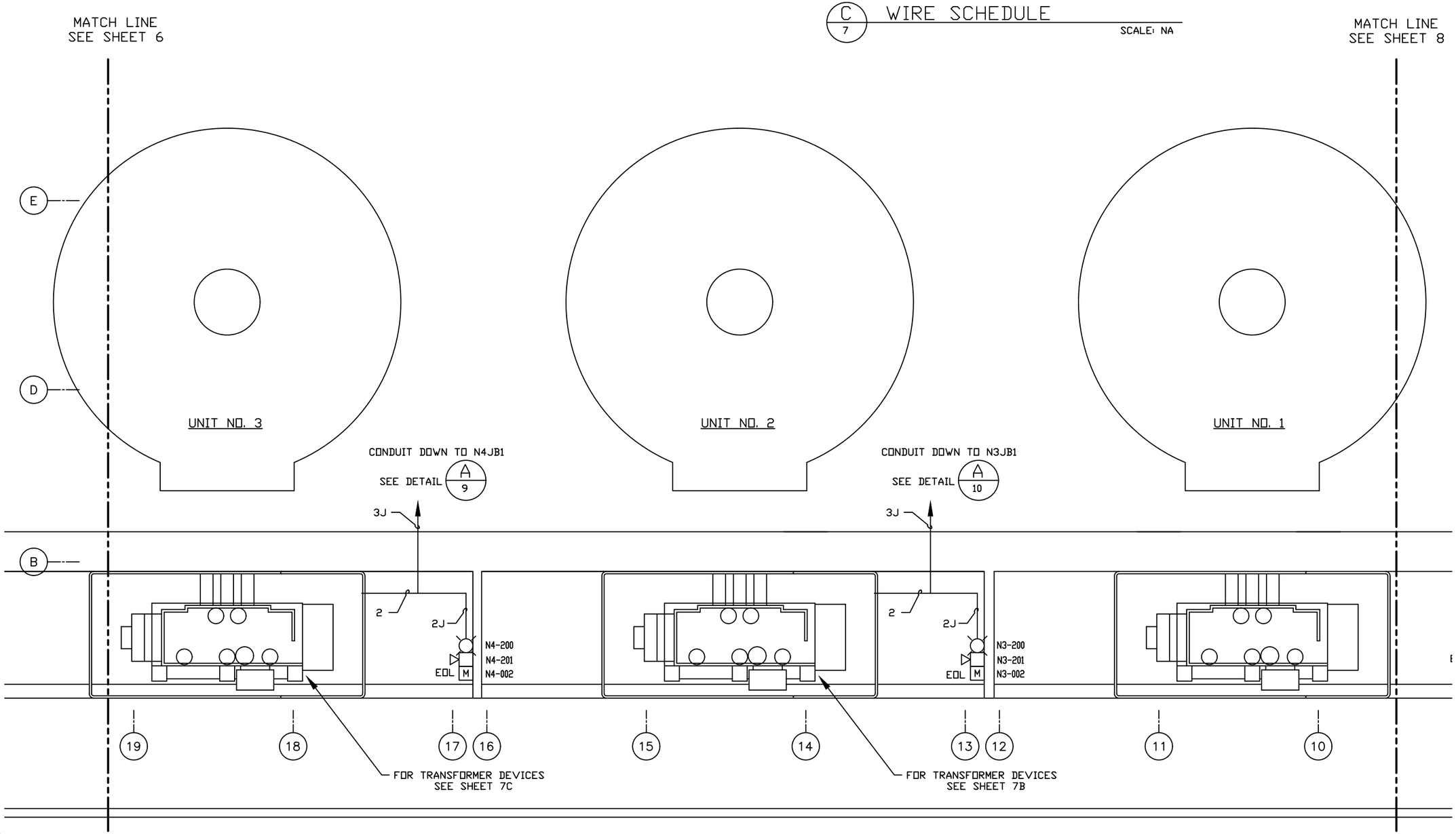

A 7 POWER HOUSE - PARTIAL FOURTH FLOOR

SCALE: 1/16"=1'-0"

REVISIONS

NO.	DESCRIPTION	BY	DATE
1.	RELEASE FOR APPROVAL & REVIEW	LDH	10/29/10
2.	ASBUILT	LDH	05/26/11
3.	ADD TRANSFORMERS 1-5	LDH	03/08/19

ELECTRIC SCIENTIFIC COMPANY
Engineered Fire Protection Systems
7505 HIGHWAY 7 MINNEAPOLIS, MINNESOTA 55426
TEL. 952-933-4671 FAX 952-933-6541

S:\GARRISONDAM\FIREALARM

NICET CERTIFICATION # 103683
FIRE ALARM SYSTEMS LEVEL III

DRAWN BY: L. HINZ

NICET CERTIFICATION # 101427
FIRE ALARM SYSTEMS LEVEL IV

CHECKED BY: J. COZZI

GARRISON DAM
PLANT FIRE ALARM SYSTEM
RIVERDALE, NORTH DAKOTA

ELECTRICAL PLAN VIEW
POWER HOUSE - PARTIAL FOURTH FLOOR

JOB NO. 400117

SHEET 7 OF SET

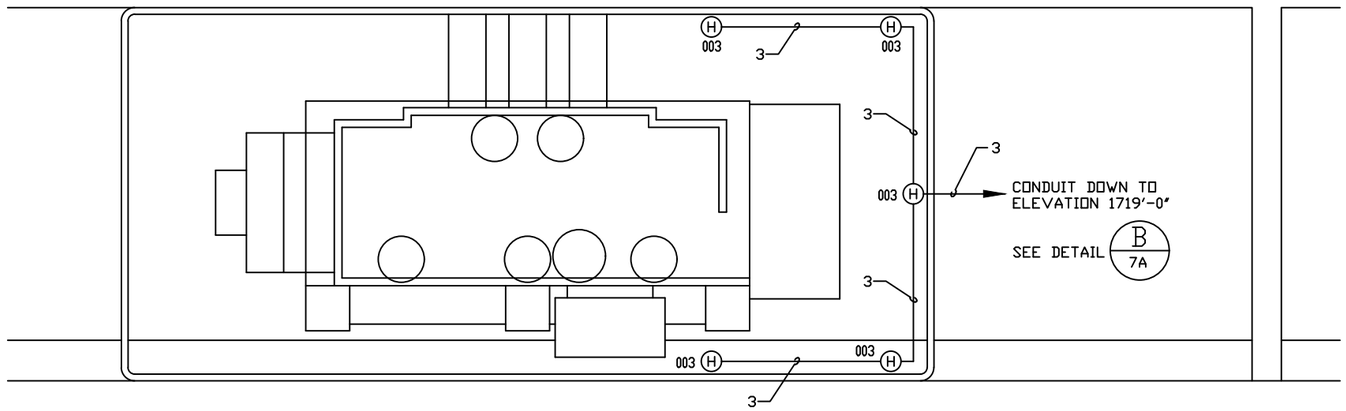

A / 7A UNIT 3 TRANSFORMER ELEVATION 1726'-0"

SCALE: 1/8"=1'-0"

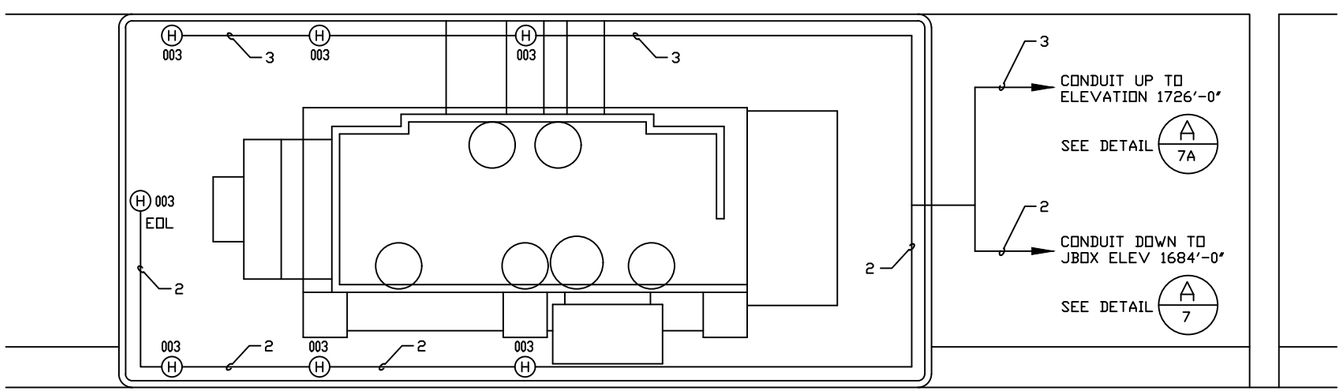

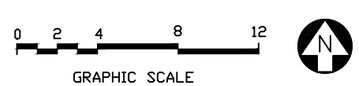

B / 7A UNIT 3 TRANSFORMER ELEVATION 1719'-0"

SCALE: 1/8"=1'-0"

H HEAT COLLECTOR W/COLLECTOR PALTE

C / 7A DEVICE LEGEND

SCALE: NA

A = 1 - 16/2 TWISTED/NON-SHIELDED PAIR
B = 1 - 18/2 TWISTED/SHIELDED PAIR
C = 2 - 16/2 TWISTED/NON-SHIELDED PAIR
D = 2 - 18/2 TWISTED/SHIELDED PAIR
E = 2 - #12 AWG THHN
F = 4 - #12 AWG THHN
G = 1 - #12 AWG THHN GREEN GROUND CONDUCTOR
H = 20 - #12 AWG THHN
1 = 3 - #12 AWG (120 VAC & GND)
2 = 2 - #14 AWG THHN
3 = 4 - #14 AWG THHN
4 = 6 - #14 AWG THHN
5 = 8 - #14 AWG THHN
6 = 10 - #14 AWG THHN
7 = 12 - #14 AWG THHN
8 = 14 - #14 AWG THHN
9 = 30 - #14 AWG THHN
10 = 54 - #14 AWG THHN
11 = 56 - #14 AWG THHN

D / 7A WIRE SCHEDULE

SCALE: NA

REVISIONS

NO.	DESCRIPTION	BY	DATE
1.	ADD TRANSFORMERS 1-5	LDH	03/08/19

ELECTRIC SCIENTIFIC COMPANY
Engineered Fire Protection Systems
7505 HIGHWAY 7 MINNEAPOLIS, MINNESOTA 55426
TEL. 952-933-4671 FAX 952-933-6541

S:\GARRISON\DWG\A4

NICET CERTIFICATION # 103683
FIRE ALARM SYSTEMS LEVEL III

DRAWN BY: L. HINZ
NICET CERTIFICATION # 101427
FIRE ALARM SYSTEMS LEVEL IV

CHECKED BY: J. COZZI

GARRISON DAM
PLANT FIRE ALARM SYSTEM
RIVERDALE, NORTH DAKOTA

ELECTRICAL PLAN VIEW
UNIT 3 TRANSFORMER DETAIL

JOB NO. 400117

SHEET 7A OF SET

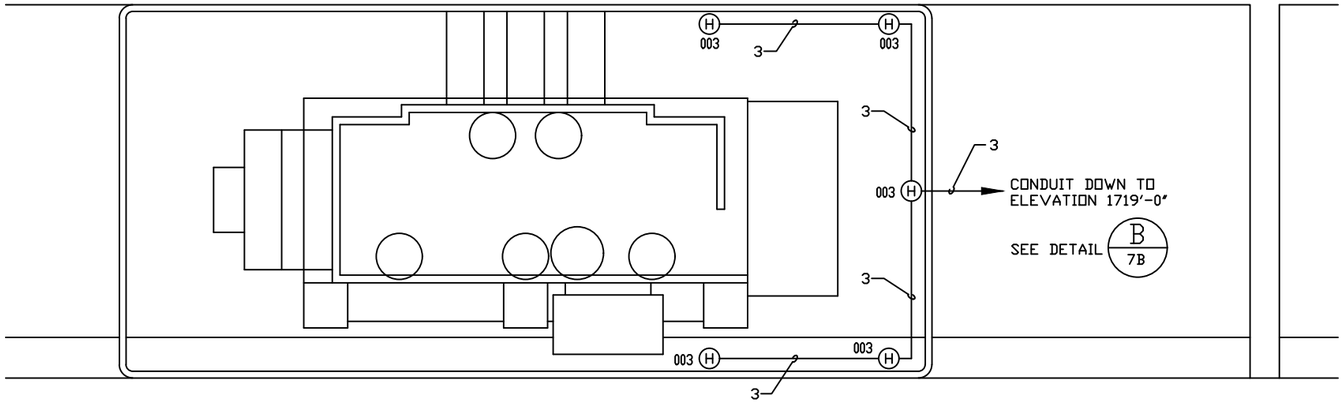

A 7B UNIT 2 TRANSFORMER ELEVATION 1726'-0"

SCALE: 1/8"=1'-0"

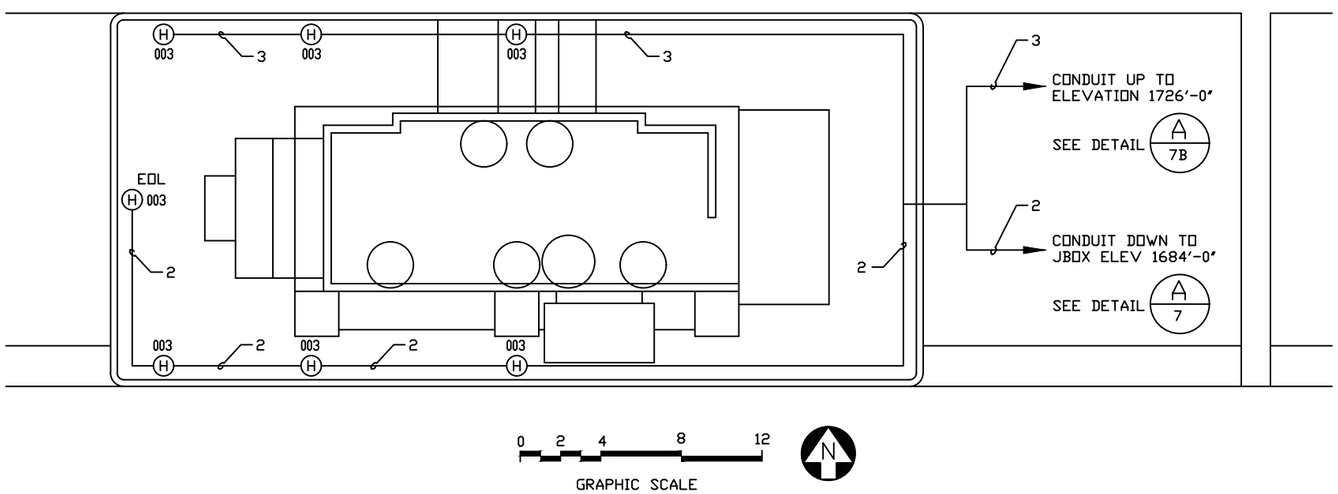

B 7B UNIT 2 TRANSFORMER ELEVATION 1719'-0"

SCALE: 1/8"=1'-0"

(H) HEAT COLLECTOR W/COLLECTOR PALTE

C 7B DEVICE LEGEND

SCALE: NA

A = 1 - 16/2 TWISTED/NON-SHIELDED PAIR
B = 1 - 18/2 TWISTED/SHIELDED PAIR
C = 2 - 16/2 TWISTED/NON-SHIELDED PAIR
D = 2 - 18/2 TWISTED/SHIELDED PAIR
E = 2 - #12 AWG THHN
F = 4 - #12 AWG THHN
G = 1 - #12 AWG THHN GREEN GROUND CONDUCTOR
H = 20 - #12 AWG THHN
1 = 3 - #12 AWG (120 VAC & GND)
2 = 2 - #14 AWG THHN
3 = 4 - #14 AWG THHN
4 = 6 - #14 AWG THHN
5 = 8 - #14 AWG THHN
6 = 10 - #14 AWG THHN
7 = 12 - #14 AWG THHN
8 = 14 - #14 AWG THHN
9 = 30 - #14 AWG THHN
10 = 54 - #14 AWG THHN
11 = 56 - #14 AWG THHN

D 7B WIRE SCHEDULE

SCALE: NA

REVISIONS

NO.	DESCRIPTION	BY	DATE
1.	ADD TRANSFORMERS 1-5	LDH	03/08/19

ELECTRIC SCIENTIFIC COMPANY
Engineered Fire Protection Systems
7505 HIGHWAY 7 MINNEAPOLIS, MINNESOTA 55426
TEL. 952-933-4671 FAX 952-933-6541

S:\GARRISONDAM

NICET CERTIFICATION # 103683
FIRE ALARM SYSTEMS LEVEL III

DRAWN BY: L. HINZ
NICET CERTIFICATION # 101427
FIRE ALARM SYSTEMS LEVEL IV

CHECKED BY: J. COZZI

GARRISON DAM
PLANT FIRE ALARM SYSTEM
RIVERDALE, NORTH DAKOTA

ELECTRICAL PLAN VIEW
UNIT 2 TRANSFORMER DETAIL

JOB NO. 400117

SHEET 7B OF SET

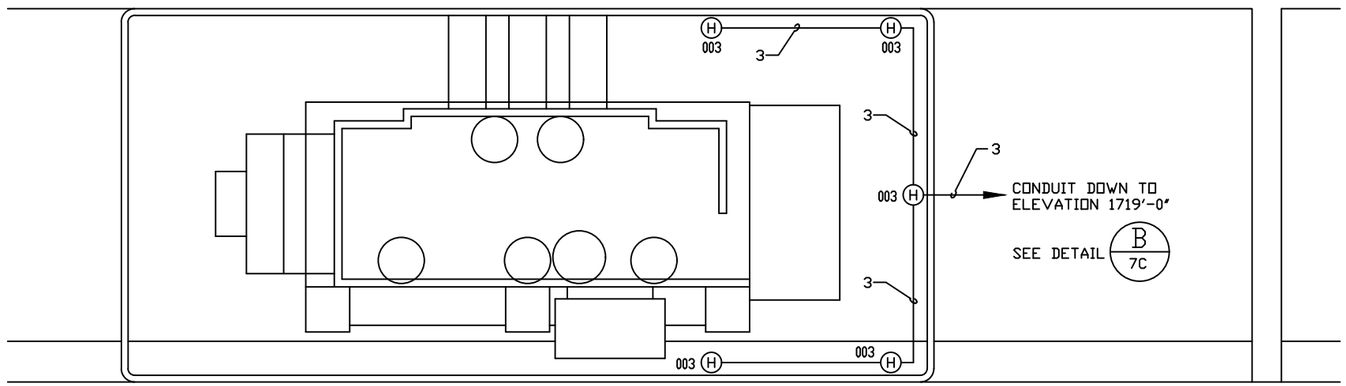

A 7C UNIT 1 TRANSFORMER ELEVATION 1726'-0"

SCALE: 1/8"=1'-0"

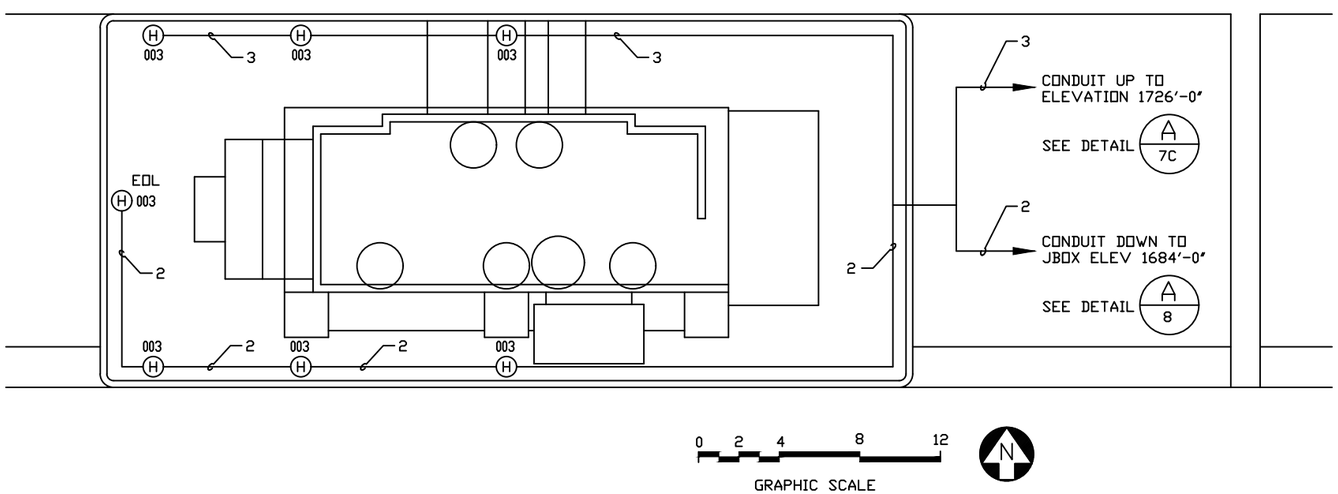

B 7C UNIT 1 TRANSFORMER ELEVATION 1719'-0"

SCALE: 1/8"=1'-0"

H HEAT COLLECTOR W/COLLECTOR PALTE

C 7C DEVICE LEGEND

SCALE: NA

A = 1 - 16/2 TWISTED/NON-SHIELDED PAIR
B = 1 - 18/2 TWISTED/SHIELDED PAIR
C = 2 - 16/2 TWISTED/NON-SHIELDED PAIR
D = 2 - 18/2 TWISTED/SHIELDED PAIR
E = 2 - #12 AWG THHN
F = 4 - #12 AWG THHN
G = 1 - #12 AWG THHN GREEN GROUND CONDUCTOR
H = 20 - #12 AWG THHN
1 = 3 - #12 AWG (120 VAC & GND)
2 = 2 - #14 AWG THHN
3 = 4 - #14 AWG THHN
4 = 6 - #14 AWG THHN
5 = 8 - #14 AWG THHN
6 = 10 - #14 AWG THHN
7 = 12 - #14 AWG THHN
8 = 14 - #14 AWG THHN
9 = 30 - #14 AWG THHN
10 = 54 - #14 AWG THHN
11 = 56 - #14 AWG THHN

D 7C WIRE SCHEDULE

SCALE: NA

REVISIONS

NO.	DESCRIPTION	BY	DATE
1.	ADD TRANSFORMES 1-5	LDH	03/08/19

ELECTRIC SCIENTIFIC COMPANY
Engineered Fire Protection Systems
7505 HIGHWAY 7 MINNEAPOLIS, MINNESOTA 55426
TEL. 952-933-4671 FAX 952-933-6541

S:\GARRISON\MAI

NICET CERTIFICATION # 103683 FIRE ALARM SYSTEMS LEVEL III
DRAWN BY: L. HINZ
NICET CERTIFICATION # 101427 FIRE ALARM SYSTEMS LEVEL IV
CHECKED BY: J. COZZI

GARRISON DAM
PLANT FIRE ALARM SYSTEM
RIVERDALE, NORTH DAKOTA

ELECTRICAL PLAN VIEW
UNIT 1 TRANSFORMER DETAIL

JOB NO. 400117

SHEET 7C OF SET

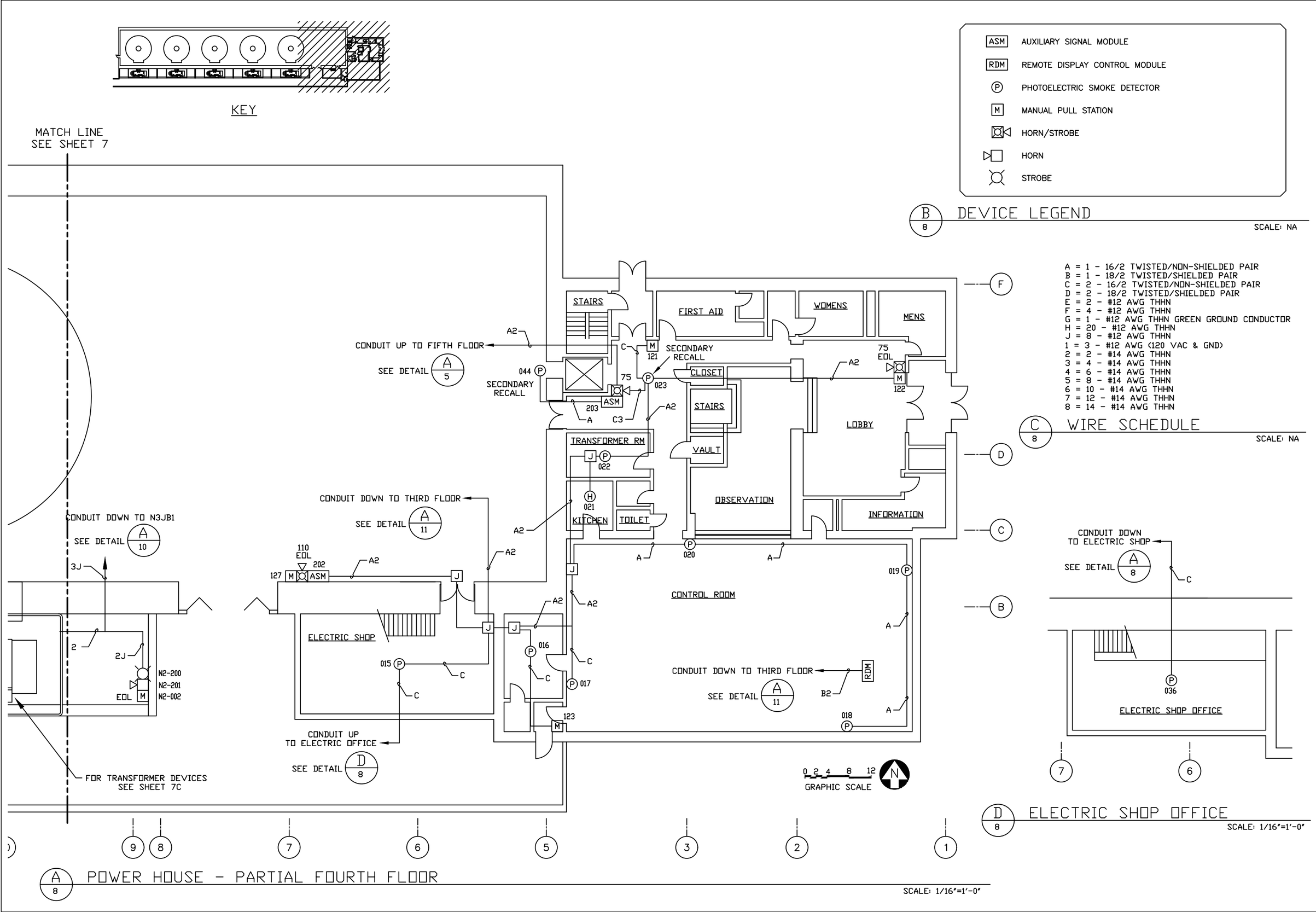

B/8 DEVICE LEGEND

SCALE: NA

A = 1 - 16/2 TWISTED/NON-SHIELDED PAIR
B = 1 - 18/2 TWISTED/SHIELDED PAIR
C = 2 - 16/2 TWISTED/NON-SHIELDED PAIR
D = 2 - 18/2 TWISTED/SHIELDED PAIR
E = 2 - #12 AWG THHN
F = 4 - #12 AWG THHN
G = 1 - #12 AWG THHN GREEN GROUND CONDUCTOR
H = 20 - #12 AWG THHN
J = 8 - #12 AWG THHN
1 = 3 - #12 AWG (120 VAC & GND)
2 = 2 - #14 AWG THHN
3 = 4 - #14 AWG THHN
4 = 6 - #14 AWG THHN
5 = 8 - #14 AWG THHN
6 = 10 - #14 AWG THHN
7 = 12 - #14 AWG THHN
8 = 14 - #14 AWG THHN

C/8 WIRE SCHEDULE

SCALE: NA

D/8 ELECTRIC SHOP OFFICE

SCALE: 1/16"=1'-0"

A/8 POWER HOUSE - PARTIAL FOURTH FLOOR

SCALE: 1/16"=1'-0"

REVISIONS

NO.	DESCRIPTION	BY	DATE
2.	ASBUILT	LDH	05/26/11
3.	ADD ELEVATOR RECALL	LDH	01/26/15
4.	REVISE PER SUBMITTAL	LDH	05/20/15
5.	ASBUILT	LDH	08/31/15
6.	ADD TRANSFORMERS 1-5	LDH	03/08/19

ELECTRIC SCIENTIFIC COMPANY
Engineered Fire Protection Systems
7505 HIGHWAY 7 MINNEAPOLIS, MINNESOTA 55426
TEL. 952-933-4671 FAX 952-933-6541

S:\GARRISONDAM\FIREALARM

NICET CERTIFICATION # 103683 FIRE ALARM SYSTEMS LEVEL III
DRAWN BY: L. HINZ
NICET CERTIFICATION # 101427 FIRE ALARM SYSTEMS LEVEL IV
CHECKED BY: J. COZZI

GARRISON DAM
PLANT FIRE ALARM SYSTEM
RIVERDALE, NORTH DAKOTA

ELECTRICAL PLAN VIEW
POWER HOUSE - PARTIAL FOURTH FLOOR

JOB NO. 400117

SHEET 8 OF SET

N#	FIRE CONTROL PANEL
BAT	BATTERY ENCLOSURE
PS	POWER SUPPLY
JB#	EQUIPMENT ENCLOSURE
M	MANUAL PULL STATION
PS	PRESSURE SWITCH
T	TAMPER SWITCH
V	DELUGE VALVE

B/9 DEVICE LEGEND

SCALE: NA

A = 1 - 16/2 TWISTED/NON-SHIELDED PAIR
B = 1 - 18/2 TWISTED/SHIELDED PAIR
C = 2 - 16/2 TWISTED/NON-SHIELDED PAIR
D = 2 - 18/2 TWISTED/SHIELDED PAIR
E = 2 - #12 AWG THHN
F = 4 - #12 AWG THHN
G = 1 - #12 AWG THHN GREEN GROUND CONDUCTOR
H = 20 - #12 AWG THHN
J = 8 - #12 AWG THHN
1 = 3 - #12 AWG (120 VAC & GND)
2 = 2 - #14 AWG THHN
3 = 4 - #14 AWG THHN
4 = 6 - #14 AWG THHN
5 = 8 - #14 AWG THHN
6 = 10 - #14 AWG THHN
7 = 12 - #14 AWG THHN
8 = 14 - #14 AWG THHN
9 = 30 - #14 AWG THHN
10 = 54 - #14 AWG THHN
11 = 56 - #14 AWG THHN

C/9 WIRE SCHEDULE

SCALE: NA

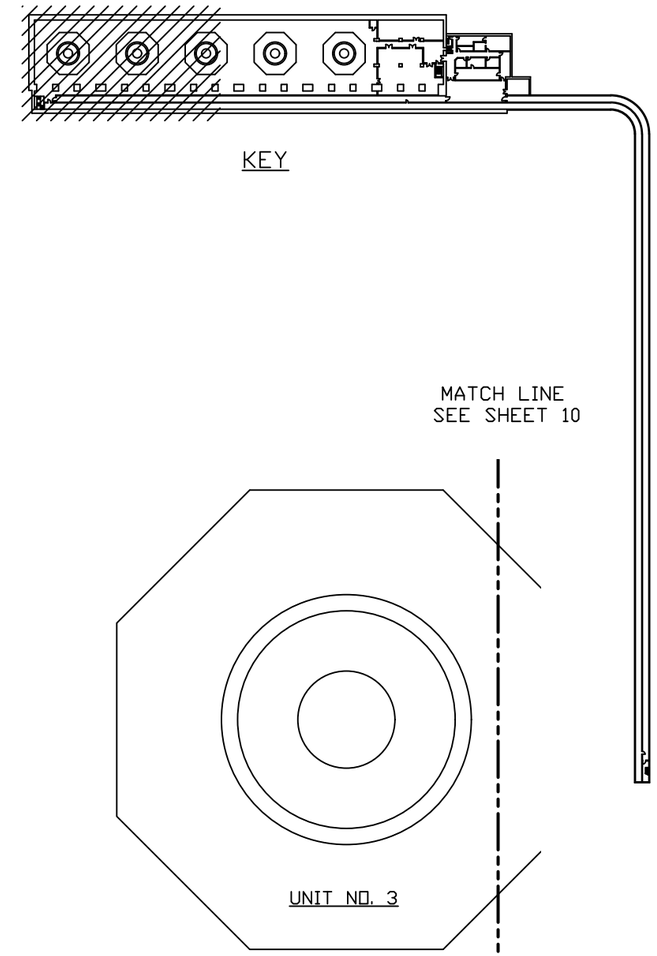

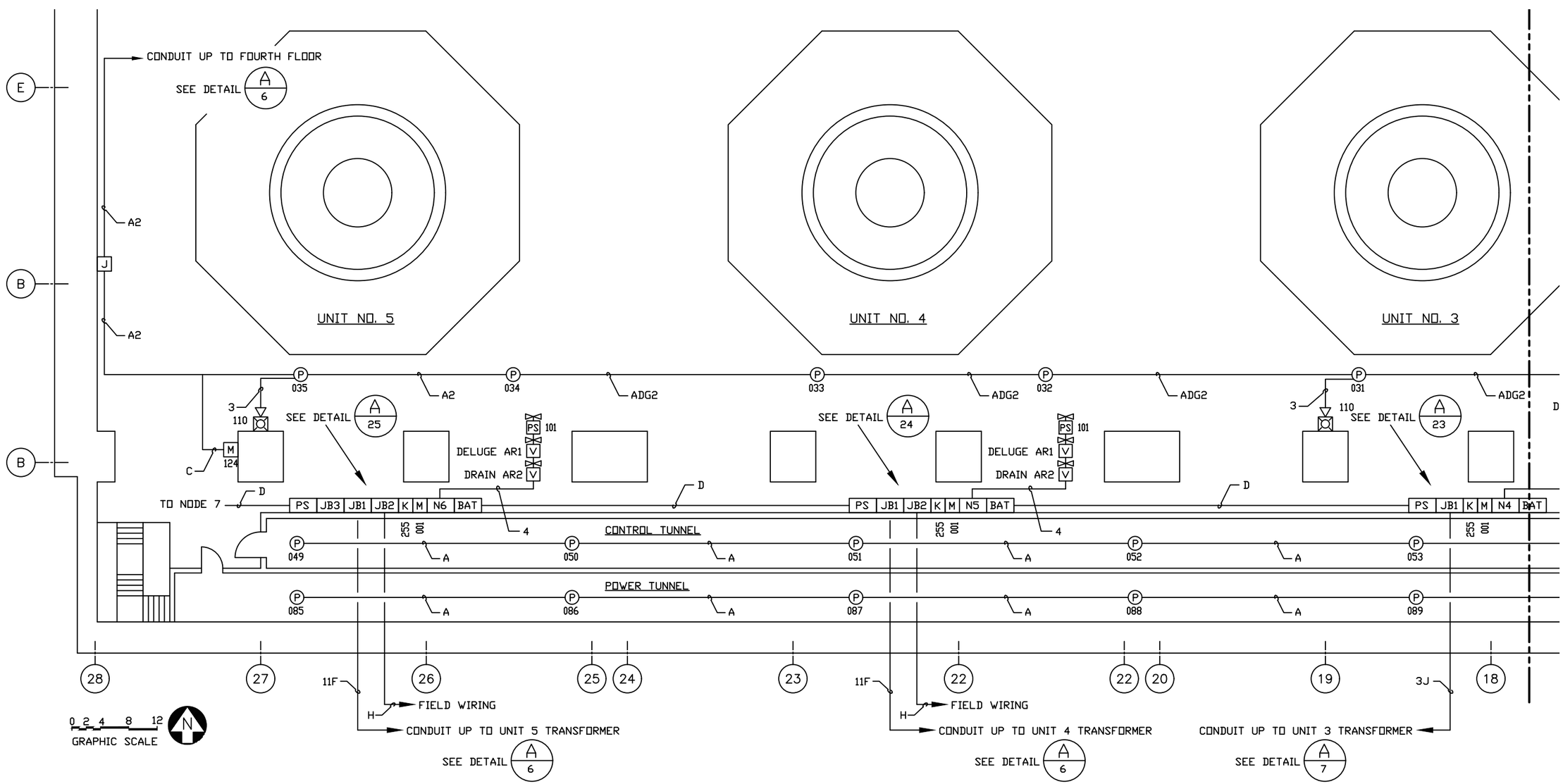

A/9 POWER HOUSE - PARTIAL THIRD FLOOR

SCALE: 1/16"=1'-0"

REVISIONS

NO.	DESCRIPTION	BY	DATE
1.	RELEASE FOR APPROVAL & REVIEW	LDH	10/29/10
2.	ASBUILT	LDH	05/26/11
3.	ADD TRANSFORMERS 1-5	LDH	03/08/19

ELECTRIC SCIENTIFIC COMPANY
Engineered Fire Protection Systems
7505 HIGHWAY 7 MINNEAPOLIS, MINNESOTA 55426
TEL. 952-933-4671 FAX 952-933-6541

S:\GARRISONDAM\FIREALARM

NICET CERTIFICATION # 103683 FIRE ALARM SYSTEMS LEVEL III
DRAWN BY: L. HINZ
NICET CERTIFICATION # 101427 FIRE ALARM SYSTEMS LEVEL IV
CHECKED BY: J. COZZI

GARRISON DAM
PLANT FIRE ALARM SYSTEM
RIVERDALE, NORTH DAKOTA

ELECTRICAL PLAN VIEW
POWER HOUSE - PARTIAL THIRD FLOOR

JOB NO. 400712

SHEET 9 OF SET

N#	FIRE CONTROL PANEL
BAT	BATTERY ENCLOSURE
PS	POWER SUPPLY
JB#	EQUIPMENT ENCLOSURE
M	MANUAL PULL STATION
PS	PRESSURE SWITCH
T	TAMPER SWITCH
V	DELUGE VALVE

B/10 DEVICE LEGEND

SCALE: NA

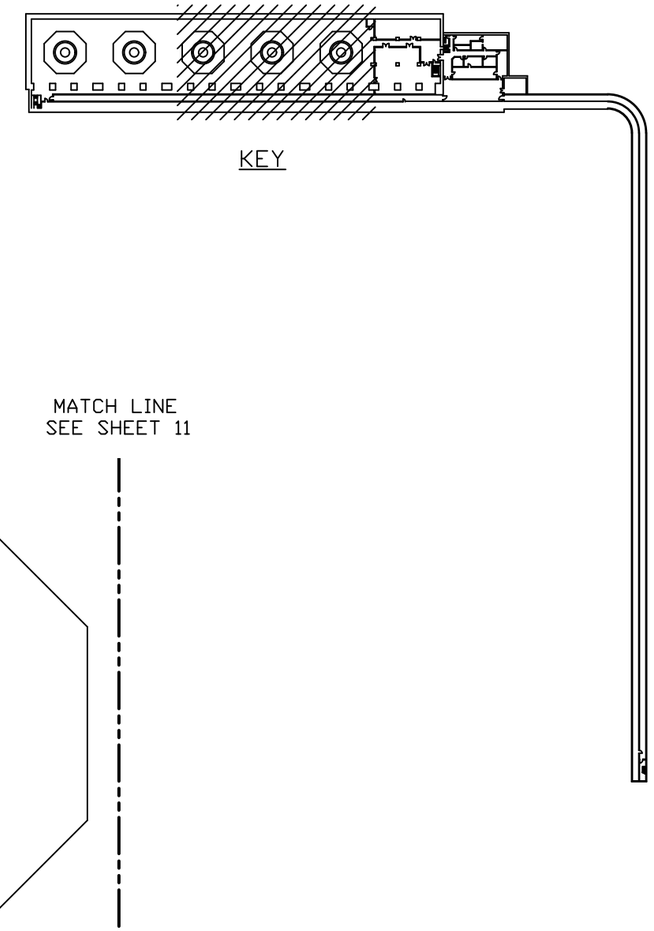

KEY

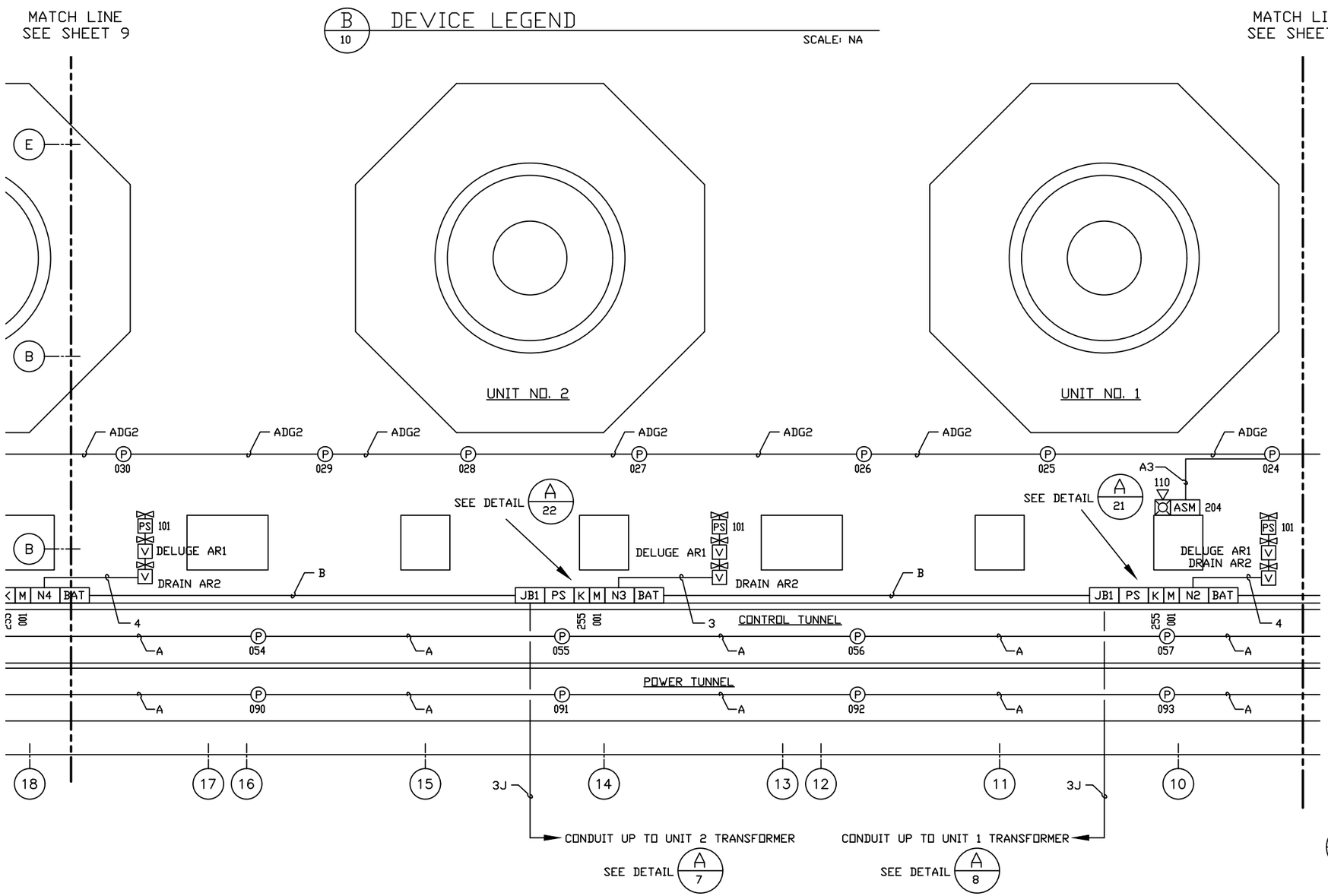

A = 1 - 16/2 TWISTED/NON-SHIELDED PAIR
B = 1 - 18/2 TWISTED/SHIELDED PAIR
C = 2 - 16/2 TWISTED/NON-SHIELDED PAIR
D = 2 - 18/2 TWISTED/SHIELDED PAIR
E = 1 - 16/4 FIRE ALARM CABLE
G = 1 - #12 AWG THHN GREEN GROUND CONDUCTOR
H = 20 - #12 AWG THHN
J = 8 - #12 AWG THHN
1 = 3 - #12 AWG (120 VAC & GND)
2 = 2 - #12 AWG THHN
3 = 4 - #12 AWG THHN
4 = 6 - #12 AWG THHN
5 = 8 - #12 AWG THHN
6 = 10 - #12 AWG THHN
7 = 12 - #12 AWG THHN
8 = 14 - #12 AWG THHN

C/10 WIRE SCHEDULE

SCALE: NA

A/10 POWER HOUSE - PARTIAL THIRD FLOOR

SCALE: 1/16"=1'-0"

REVISIONS

NO.	DESCRIPTION	BY	DATE
1.	RELEASE FOR APPROVAL & REVIEW	LDH	10/29/10
2.	ASBUILT	LDH	05/26/11
3.	ADD TRANSFORMERS 1-5	LDH	03/08/19

ELECTRIC SCIENTIFIC COMPANY
Engineered Fire Protection Systems
7505 HIGHWAY 7 MINNEAPOLIS, MINNESOTA 55426
TEL. 952-933-4671 FAX 952-933-6541

S:\GARRISONDAM\FIREALARM

NICET CERTIFICATION # 103683
FIRE ALARM SYSTEMS LEVEL III

DRAWN BY: L. HINZ
NICET CERTIFICATION # 101427
FIRE ALARM SYSTEMS LEVEL IV

CHECKED BY: J. COZZI

GARRISON DAM
PLANT FIRE ALARM SYSTEM
RIVERDALE, NORTH DAKOTA

ELECTRICAL PLAN VIEW
POWER HOUSE - PARTIAL THIRD FLOOR

JOB NO. 400712

SHEET 10 OF SET

A = 1 - 16/2 TWISTED/NON-SHIELDED PAIR
B = 1 - 18/2 TWISTED/SHIELDED PAIR
C = 2 - 16/2 TWISTED/NON-SHIELDED PAIR
D = 2 - 18/2 TWISTED/SHIELDED PAIR
E = 1 - 16/4 FIRE ALARM CABLE
G = 1 - #12 AWG THHN GREEN GROUND CONDUCTOR
1 = 3 - #12 AWG (120 VAC & GND)
2 = 2 - #12 AWG THHN
3 = 4 - #12 AWG THHN
4 = 6 - #12 AWG THHN
5 = 8 - #12 AWG THHN
6 = 10 - #12 AWG THHN
7 = 12 - #12 AWG THHN
8 = 14 - #12 AWG THHN

C 11 WIRE SCHEDULE

SCALE: NA

N1	FIRE CONTROL PANEL N1	ASM	AUXILIARY SIGNAL MODULE
P	PHOTOELECTRIC SMOKE DETECTOR	MED	MEDIA CONVERTOR
M	MANUAL PULL STATION	ANA	ANALASER DETECTOR
	HORN/STROBE	BAT	BATTERY ENCLOSURE
JB5	JUNCTION BOX	PS#	POWER SUPPLY

B 11 DEVICE LEGEND

SCALE: NA

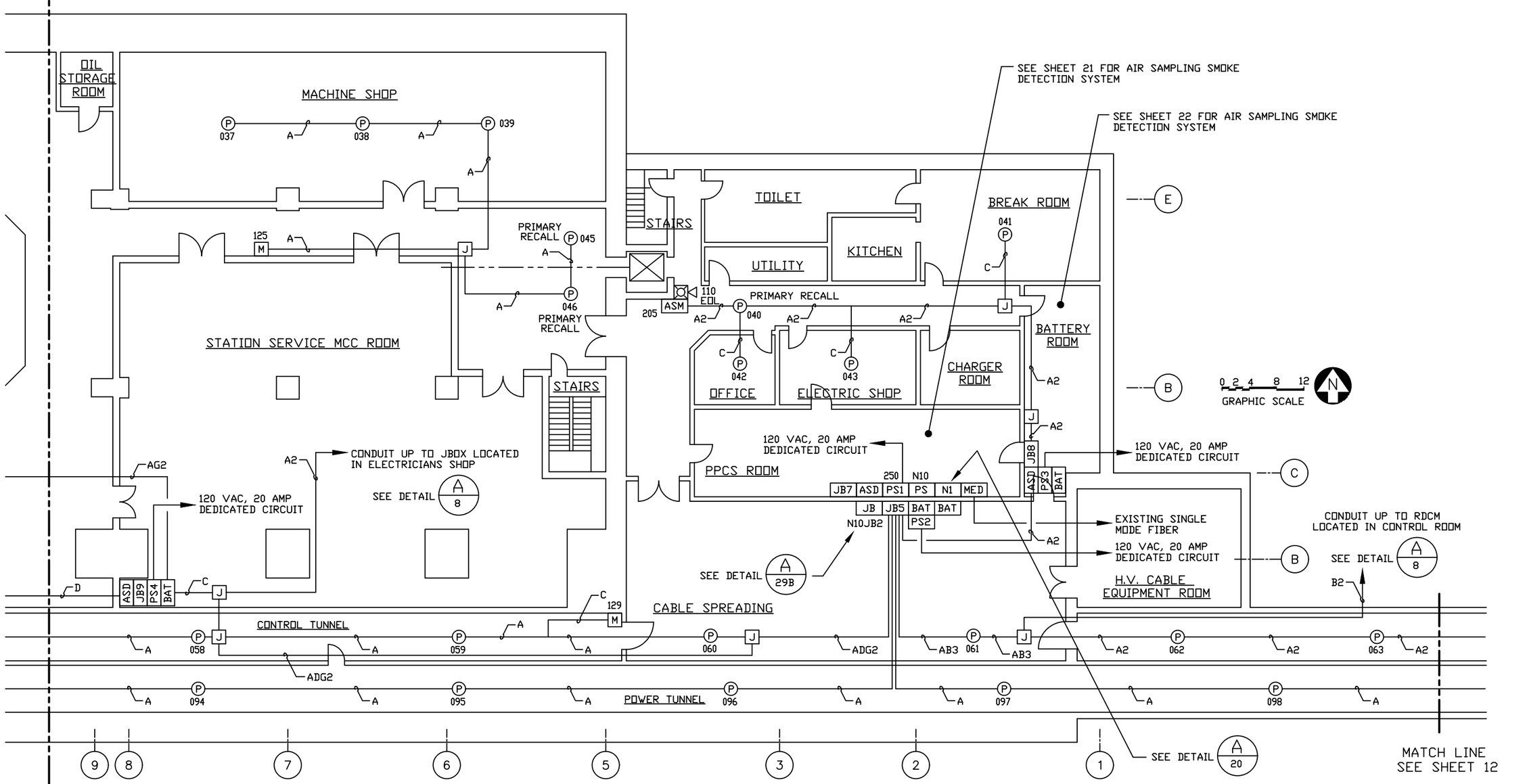

A 11 POWER HOUSE - PARTIAL THIRD FLOOR

SCALE: 1/16"=1'-0"

REVISIONS

NO.	DESCRIPTION	BY	DATE
4.	REVISE PER SUBMITTAL	LDH	05/20/15
5.	ASBUILT	LDH	08/31/15
6.	ADD TRANSFORMERS 1-5	LDH	03/08/19
7.	AIR SAMPLING DETECTOR UPGRADE	LDH	06/10/20
8.	ASBUILT	LDH	01/26/21

ELECTRIC SCIENTIFIC COMPANY
Engineered Fire Protection Systems
7505 HIGHWAY 7 MINNEAPOLIS, MINNESOTA 55426
TEL. 952-933-4671 FAX 952-933-6541

S:\GARRISONDAM\FIREALARM

NICET CERTIFICATION # 103683 FIRE ALARM SYSTEMS LEVEL III
DRAWN BY: L. HINZ
NICET CERTIFICATION # 101427 FIRE ALARM SYSTEMS LEVEL IV
CHECKED BY: J. COZZI

GARRISON DAM
PLANT FIRE ALARM SYSTEM
RIVERDALE, NORTH DAKOTA

ELECTRICAL PLAN VIEW
POWER HOUSE - PARTIAL THIRD FLOOR

JOB NO. 400712

SHEET 11 OF SET

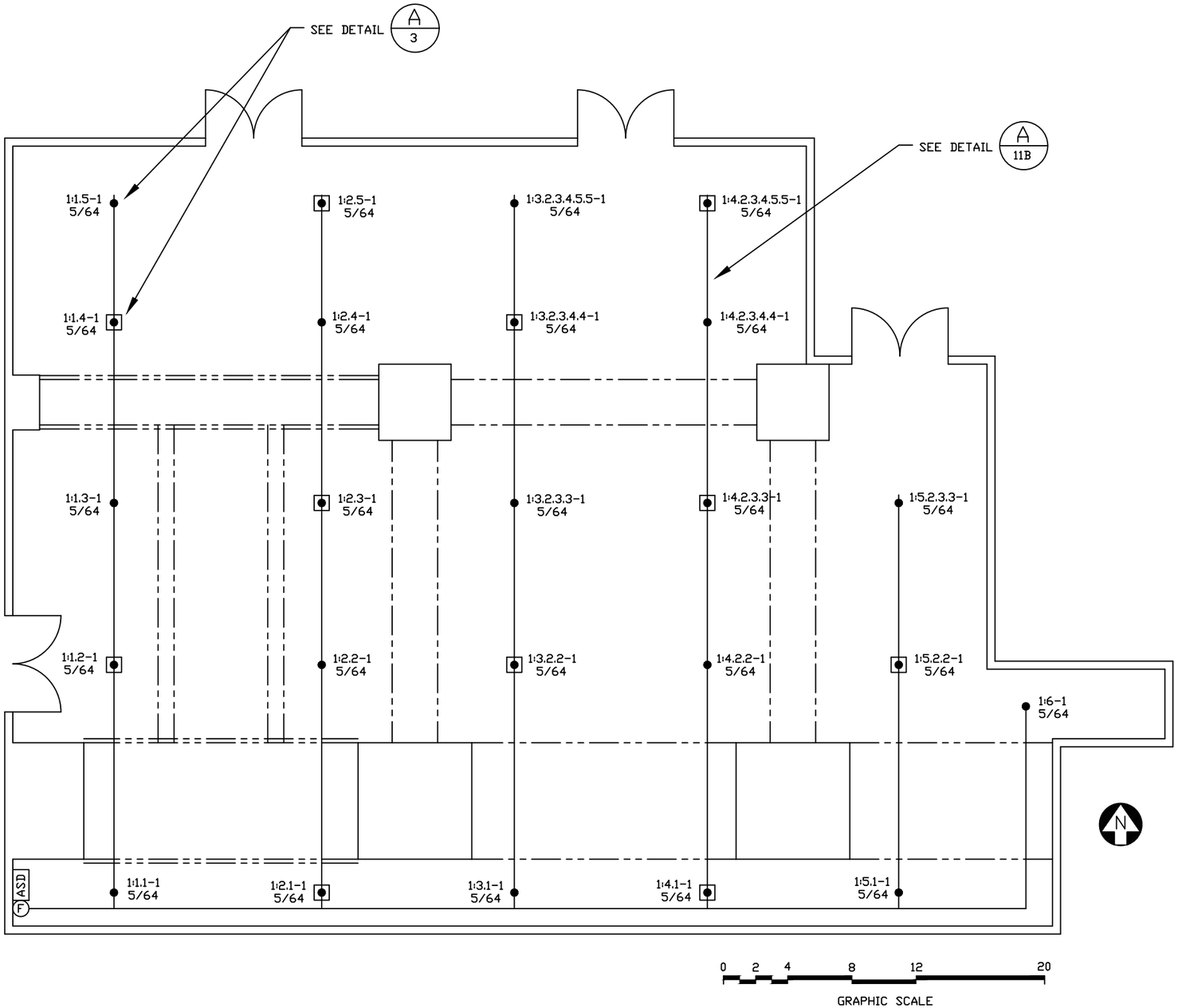

A/11A STATION SERVICE MCC ROOM - AIR SAMPLING SMOKE DETECTION

SCALE: 1/8"=1'-0"

1:1-1 5/64 SEGMENT SAMPLING POINT W/HOLE SIZE

EXTENDED SAMPLING POINT (WHIP)

3" EXTENDED SAMPLING POINT

36" EXTENDED SAMPLING POINT

(F) FILTER

ASD ANALASER DETECTOR

B/11A AIR SAMPLING LEGEND

SCALE: NTS

NOTE:
SEE SHEET 3 FOR AIR SAMPLING NOTES & DETAILS

REVISIONS

NO.	DESCRIPTION	BY	DATE
1.	RELEASE FOR AAPROVAL & REVIEW	LDH	10/29/10
2.	ADD TRANSFORMERS 1-5	LDH	03/08/19
3.	AIR SAMPLING DETECTOR UPGRADE	LDH	06/10/20
4.	ASBUILT	LDH	01/26/21

ELECTRIC SCIENTIFIC COMPANY
Engineered Fire Protection Systems
7505 HIGHWAY 7 MINNEAPOLIS, MINNESOTA 55426
TEL. 952-933-4671 FAX 952-933-6541

H:\JOBS\GARRISON

NICET CERTIFICATION # 103683 FIRE ALARM SYSTEMS LEVEL III

DRAWN BY: L. HINZ

NICET CERTIFICATION # 101427 FIRE ALARM SYSTEMS LEVEL IV

CHECKED BY: J. COZZI

GARRISON DAM
PLANT FIRE ALARM SYSTEM
RIVERDALE, NORTH DAKOTA

AIR SAMPLING SMOKE DETECTION
STATION SERVICE MCC ROOM

JOB NO. 400712

SHEET 11A OF SET

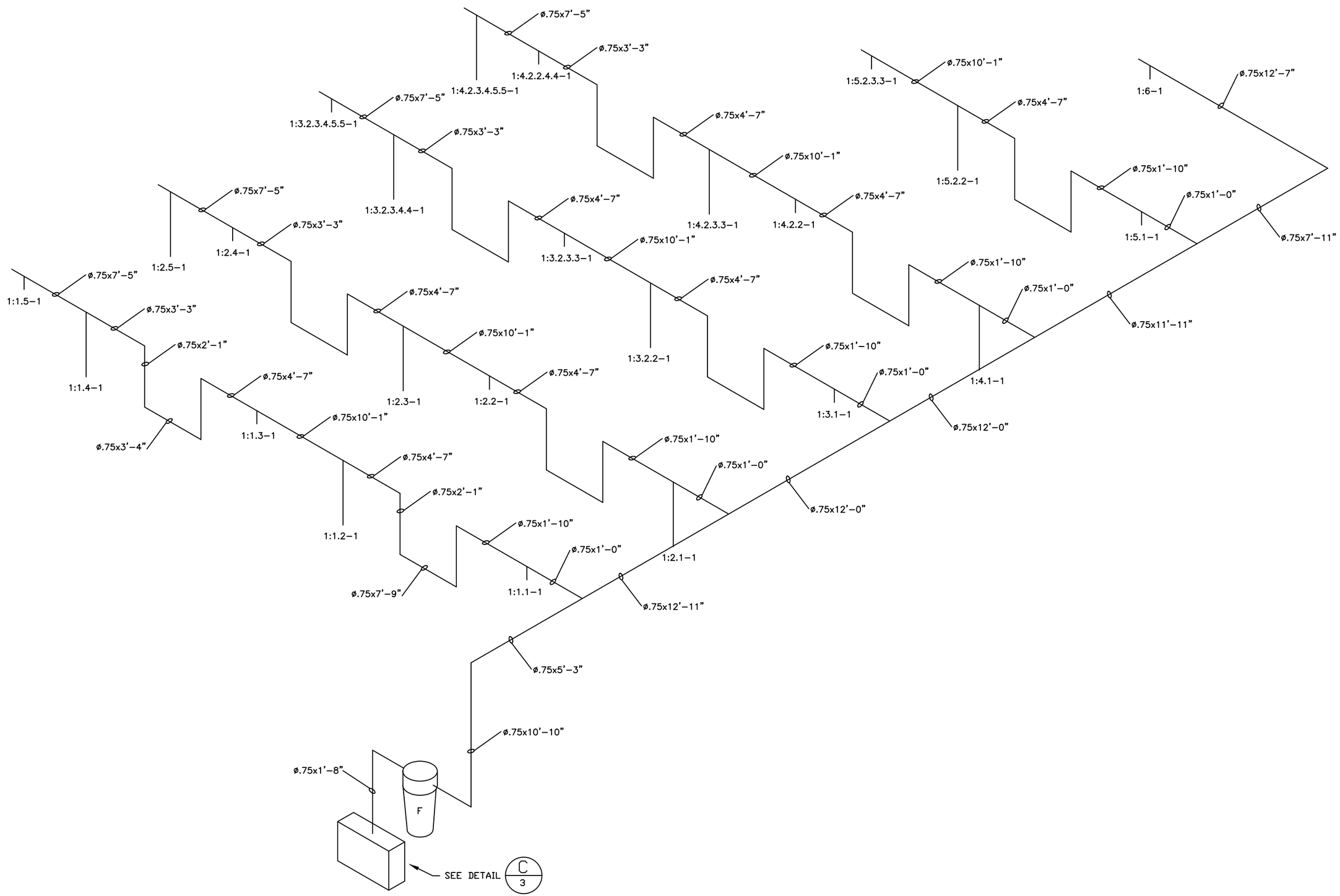

A 11B PIPING ISOMETRIC - STATION SERVICE MCC ROOM

SCALE: NTS

REVISIONS

NO.	DESCRIPTION	BY	DATE
1.	RELEASE FOR AAPROVAL & REVIEW	LDH	10/29/10
2.	ADD TRANSFORMERS 1-5	LDH	03/08/19
3.	AIR SAMPLING DETECTOR UPGRADE	LDH	06/10/20
4.	ASBUILT	LDH	01/26/21

ELECTRIC SCIENTIFIC COMPANY
Engineered Fire Protection Systems
7505 HIGHWAY 7 MINNEAPOLIS, MINNESOTA 55426
TEL. 952-933-4671 FAX 952-933-6541

H:\JOBS\GARRISON

NICET CERTIFICATION # 103683 FIRE ALARM SYSTEMS LEVEL III
DRAWN BY: L. HINZ
NICET CERTIFICATION # 101427 FIRE ALARM SYSTEMS LEVEL IV
CHECKED BY: J. COZZI

GARRISON DAM
PLANT FIRE ALARM SYSTEM
RIVERDALE, NORTH DAKOTA

AIR SAMPLING SMOKE DETECTION
PIPING ISOMETRIC - STATION SERVICE MCC ROOM

JOB NO. 400712

SHEET 11B OF SET

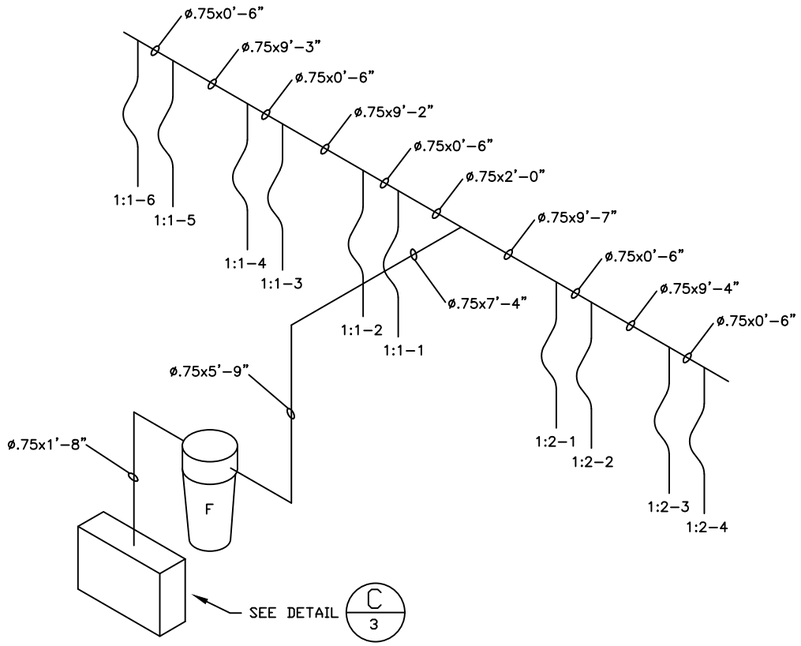

A/11C PIPING ISOMETRIC

SCALE: NTS

NOTE:
SEE SHEET 3 FOR AIR SAMPLING NOTES & DETAILS

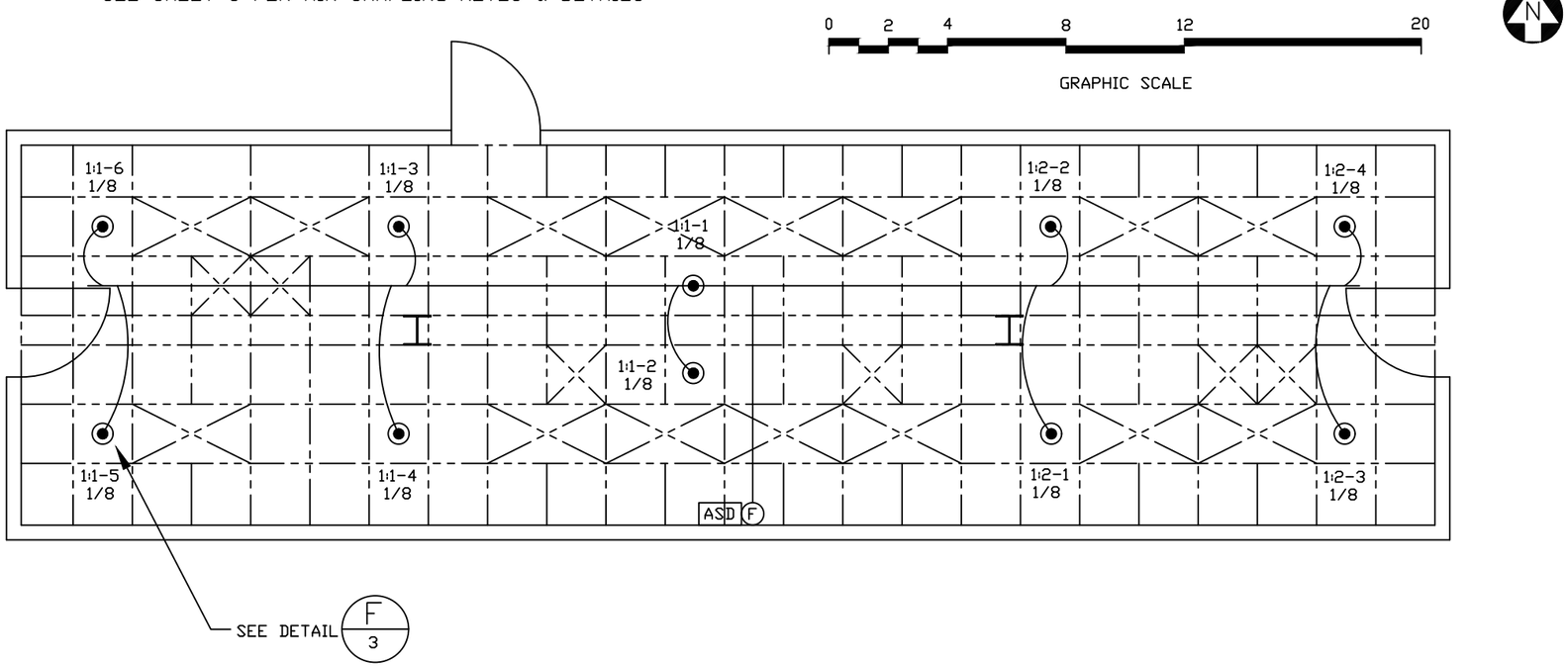

B/11C PPCS ROOM - AIR SAMPLING SMOKE DETECTION

SCALE: 3/16"=1'-0"

1:1-1 1/8	SEGMENT SAMPLING POINT W/HOLE SIZE
	EXTENDED SAMPLING POINT (WHIP)
	3" EXTENDED SAMPLING POINT
	36" EXTENDED SAMPLING POINT
F	FILTER
ASD	AIR SAMPLING DETECTOR

C/11C AIR SAMPLING LEGEND

SCALE: NTS

REVISIONS

NO.	DESCRIPTION	BY	DATE
1.	RELEASE FOR AAPROVAL & REVIEW	LDH	10/29/10
2.	ADD TRANSFORMERS 1-5	LDH	03/08/19
3.	AIR SAMPLING DETECTOR UPGRADE	LDH	06/10/20
4.	ASBUILT	LDH	01/26/21

ELECTRIC SCIENTIFIC COMPANY
Engineered Fire Protection Systems
7505 HIGHWAY 7 MINNEAPOLIS, MINNESOTA 55426
TEL. 952-933-4671 FAX 952-933-6541

H:\JOBS\MINNKOTA

NICET CERTIFICATION # 103683 FIRE ALARM SYSTEMS LEVEL III
DRAWN BY: L. HINZ
NICET CERTIFICATION # 101427 FIRE ALARM SYSTEMS LEVEL IV
CHECKED BY: J. COZZI

GARRISON DAM
PLANT FIRE ALARM SYSTEM
RIVERDALE, NORTH DAKOTA

AIR SAMPLING SMOKE DETECTION
PPCS ROOM

JOB NO. 400712

SHEET 11C OF SET

NOTE:
SEE SHEET 3 FOR AIR SAMPLING NOTES & DETAILS

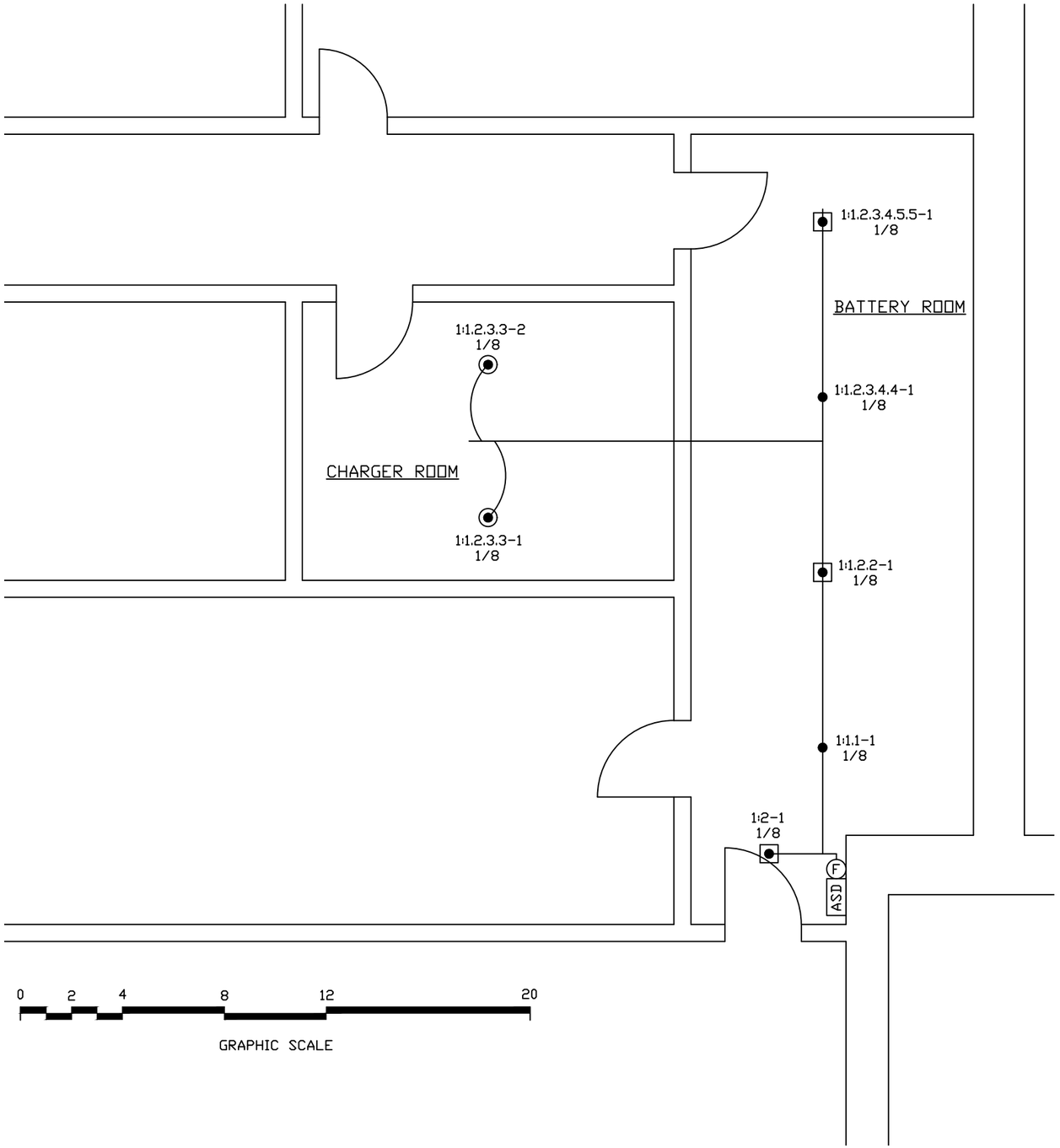

A / 11D BATTERY ROOM - AIR SAMPLING SMOKE DETECTION

SCALE: 3/16"=1'-0"

1:1-1 1/8 SEGMENT SAMPLING POINT W/HOLE SIZE
EXTENDED SAMPLING POINT (WHIP)
3" EXTENDED SAMPLING POINT
36" EXTENDED SAMPLING POINT
F FILTER
ASD AIR SAMPLING DETECTOR

B / 11D AIR SAMPLING LEGEND

SCALE: NTS

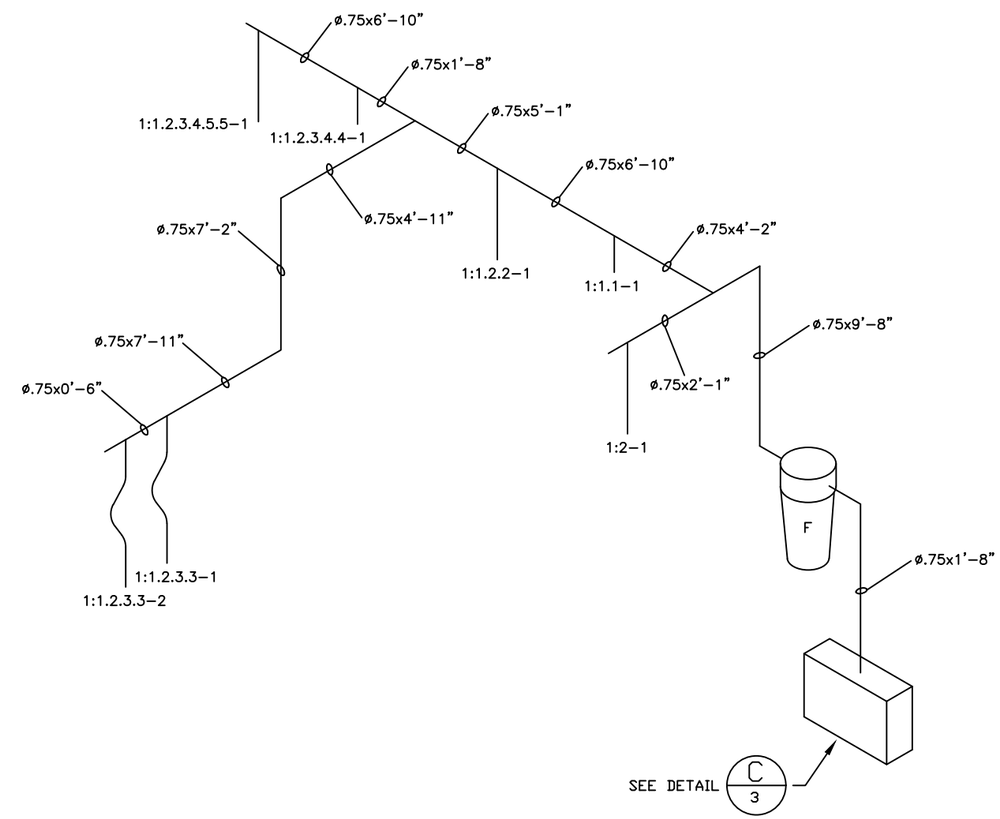

C / 11D PIPING ISOMETRIC

SCALE: NTS

REVISIONS

NO.	DESCRIPTION	BY	DATE
1.	RELEASE FOR AAPROVAL & REVIEW	LDH	10/29/10
2.	ASBUILT	LDH	05/26/11
3.	ADD TRANSFORMERS 1-5	LDH	03/08/19
4.	AIR SAMPLING DETECTOR UPGRADE	LDH	06/10/20
5.	ASBUILT	LDH	01/26/21

ELECTRIC SCIENTIFIC COMPANY
Engineered Fire Protection Systems
7505 HIGHWAY 7 MINNEAPOLIS, MINNESOTA 55426
TEL. 952-933-4671 FAX 952-933-6541

H:\CADD\ARMKOTA

NICET CERTIFICATION # 103683
FIRE ALARM SYSTEMS LEVEL III

DRAWN BY: L. HINZ
NICET CERTIFICATION # 101427
FIRE ALARM SYSTEMS LEVEL IV

CHECKED BY: J. COZZI

GARRISON DAM
PLANT FIRE ALARM SYSTEM
RIVERDALE, NORTH DAKOTA

AIR SAMPLING SMOKE DETECTION
BATTERY ROOM

JOB NO. 400712

SHEET 11D OF SET

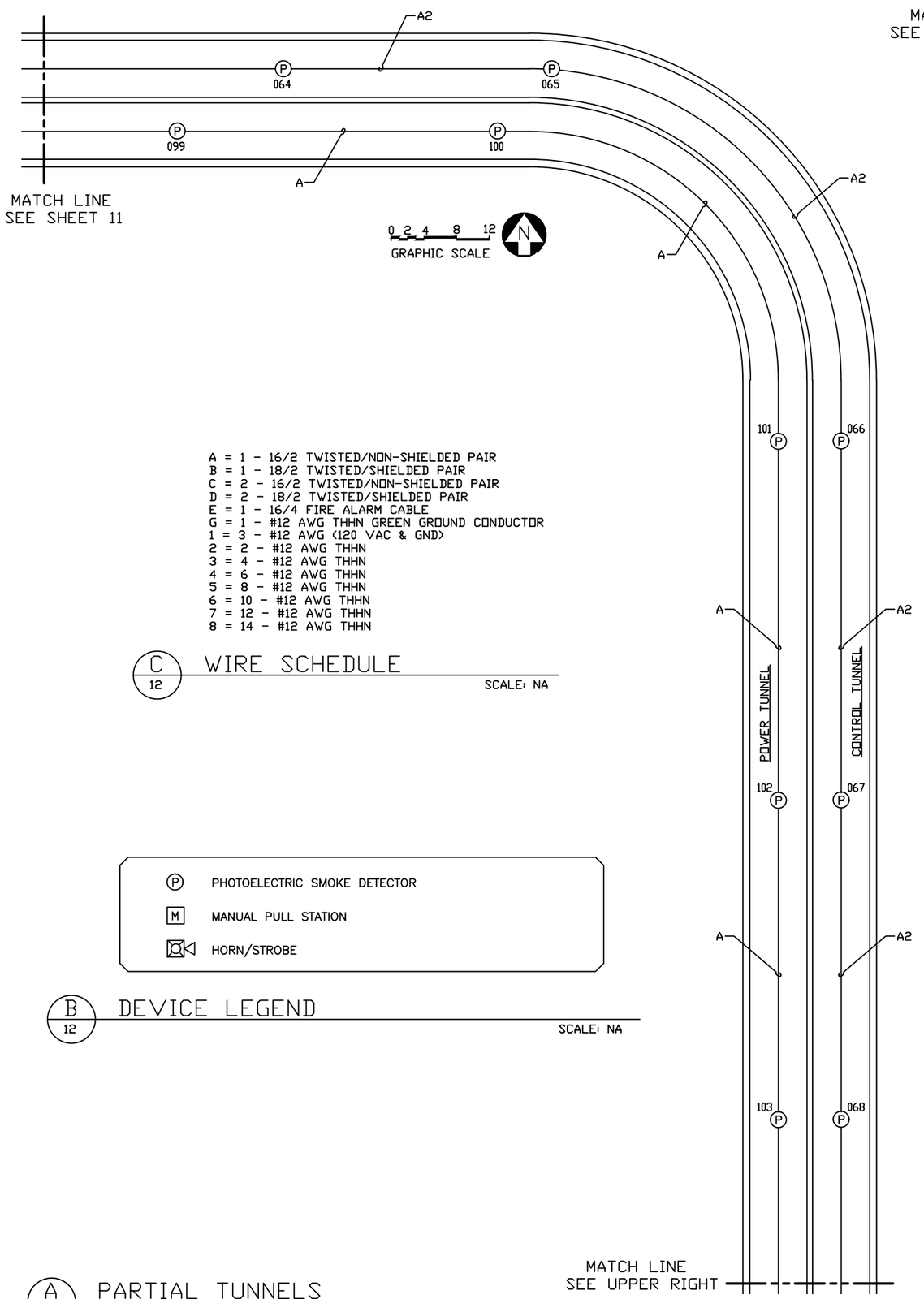

A = 1 - 16/2 TWISTED/NON-SHIELDED PAIR
B = 1 - 18/2 TWISTED/SHIELDED PAIR
C = 2 - 16/2 TWISTED/NON-SHIELDED PAIR
D = 2 - 18/2 TWISTED/SHIELDED PAIR
E = 1 - 16/4 FIRE ALARM CABLE
G = 1 - #12 AWG THHN GREEN GROUND CONDUCTOR
1 = 3 - #12 AWG (120 VAC & GND)
2 = 2 - #12 AWG THHN
3 = 4 - #12 AWG THHN
4 = 6 - #12 AWG THHN
5 = 8 - #12 AWG THHN
6 = 10 - #12 AWG THHN
7 = 12 - #12 AWG THHN
8 = 14 - #12 AWG THHN

C 12 WIRE SCHEDULE

SCALE: NA

P PHOTOELECTRIC SMOKE DETECTOR
M MANUAL PULL STATION
HORN/STROBE

B 12 DEVICE LEGEND

SCALE: NA

A 12 PARTIAL TUNNELS

SCALE: 1/16"=1'-0"

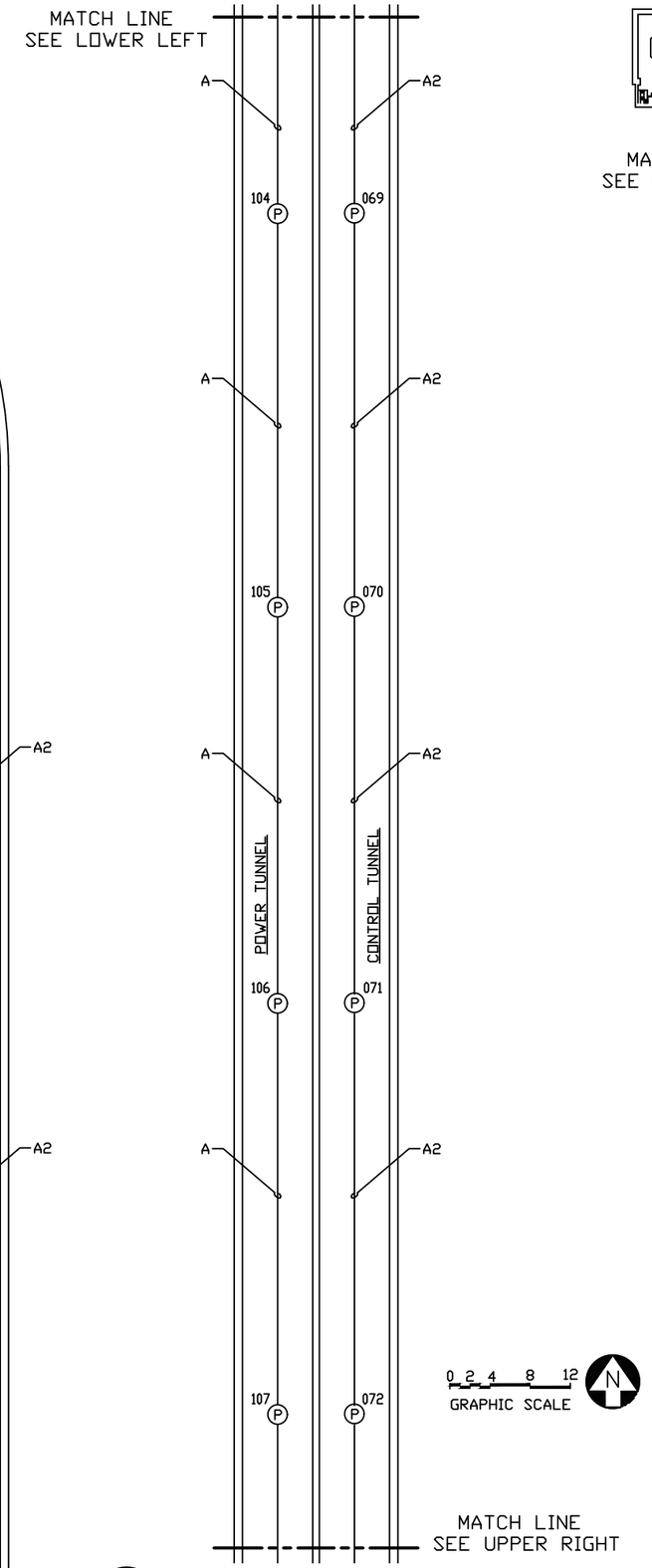

D 12 PARTIAL TUNNELS

SCALE: 1/16"=1'-0"

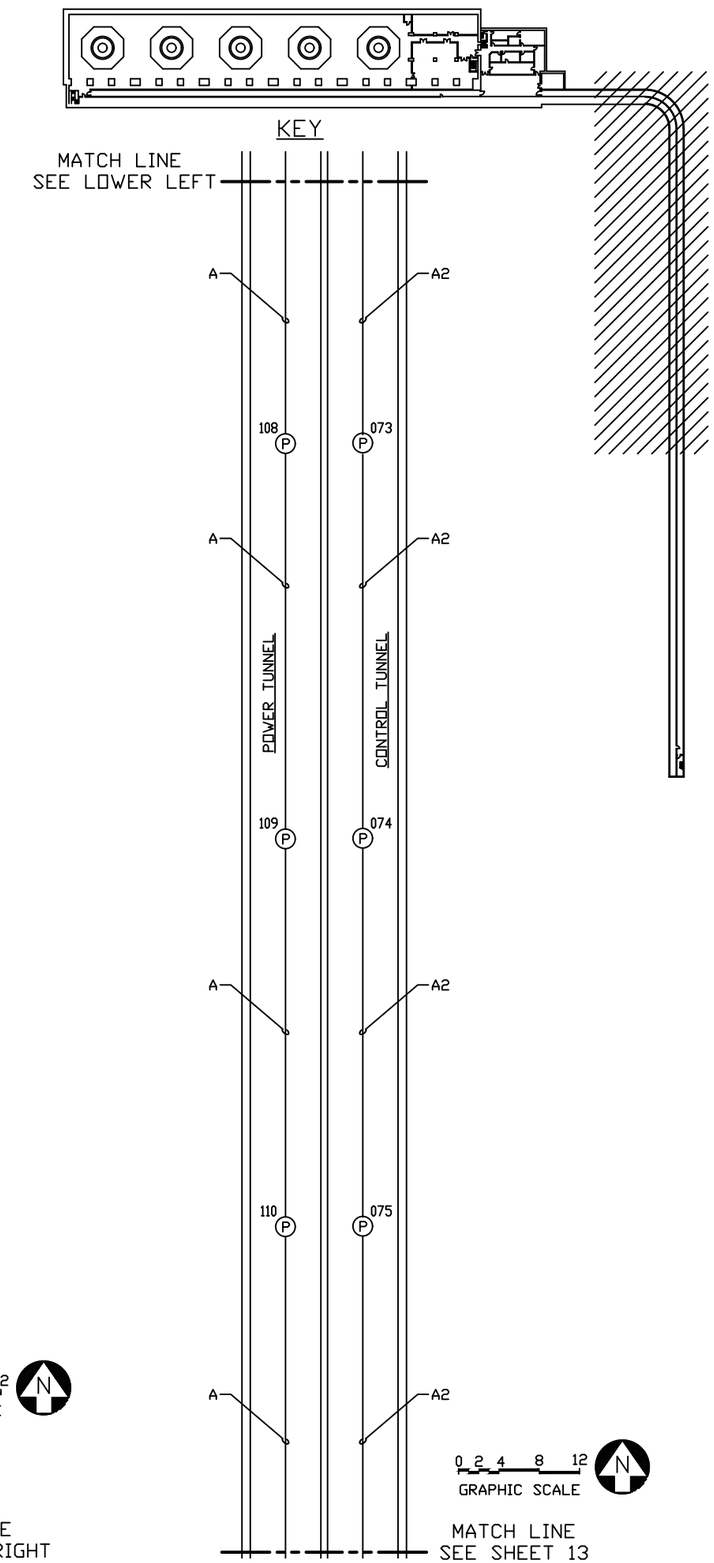

E 12 PARTIAL TUNNELS

SCALE: 1/16"=1'-0"

REVISIONS

NO.	DESCRIPTION	BY	DATE
1.	RELEASE FOR APPROVAL & REVIEW	LDH	10/29/10
2.	ASBUILT	LDH	05/26/11
3.	ADD TRANSFORMERS 1-5	LDH	03/08/19

ELECTRIC SCIENTIFIC COMPANY
Engineered Fire Protection Systems
7505 HIGHWAY 7 MINNEAPOLIS, MINNESOTA 55426
TEL. 952-933-4671 FAX 952-933-6541

S:\GARRISONDAM\FIREALARM

NICET CERTIFICATION # 103683
FIRE ALARM SYSTEMS LEVEL III

DRAWN BY: L. HINZ
NICET CERTIFICATION # 101427
FIRE ALARM SYSTEMS LEVEL IV

CHECKED BY: J. COZZI

GARRISON DAM
PLANT FIRE ALARM SYSTEM
RIVERDALE, NORTH DAKOTA

ELECTRICAL PLAN VIEW
POWER HOUSE - PARTIAL THIRD FLOOR

JOB NO. 400712

SHEET 12 OF SET

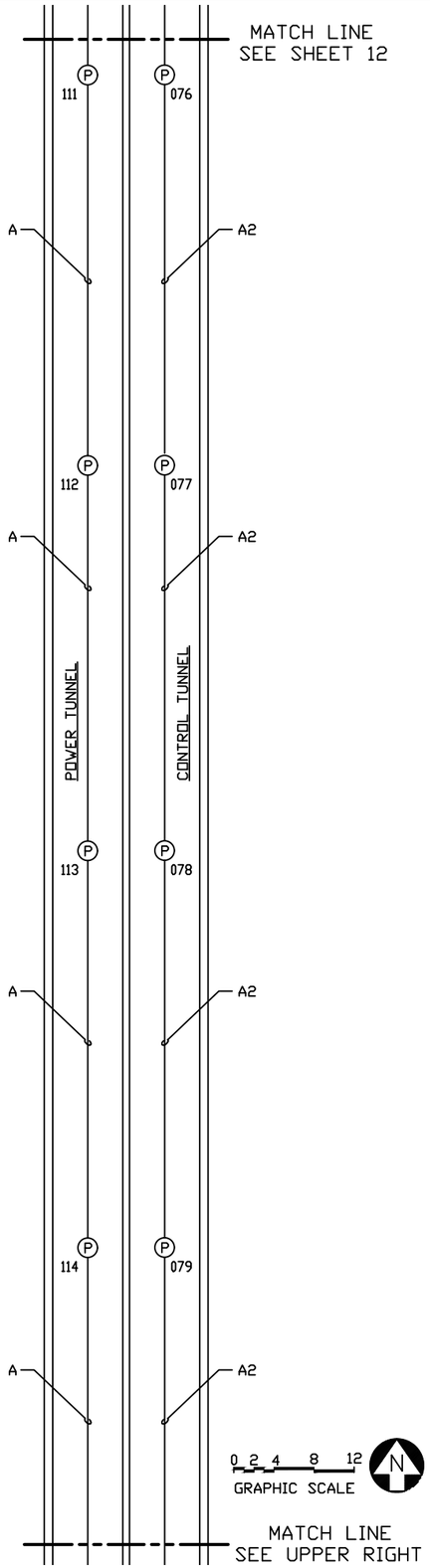

A 13 PARTIAL TUNNELS

SCALE: 1/16"=1'-0"

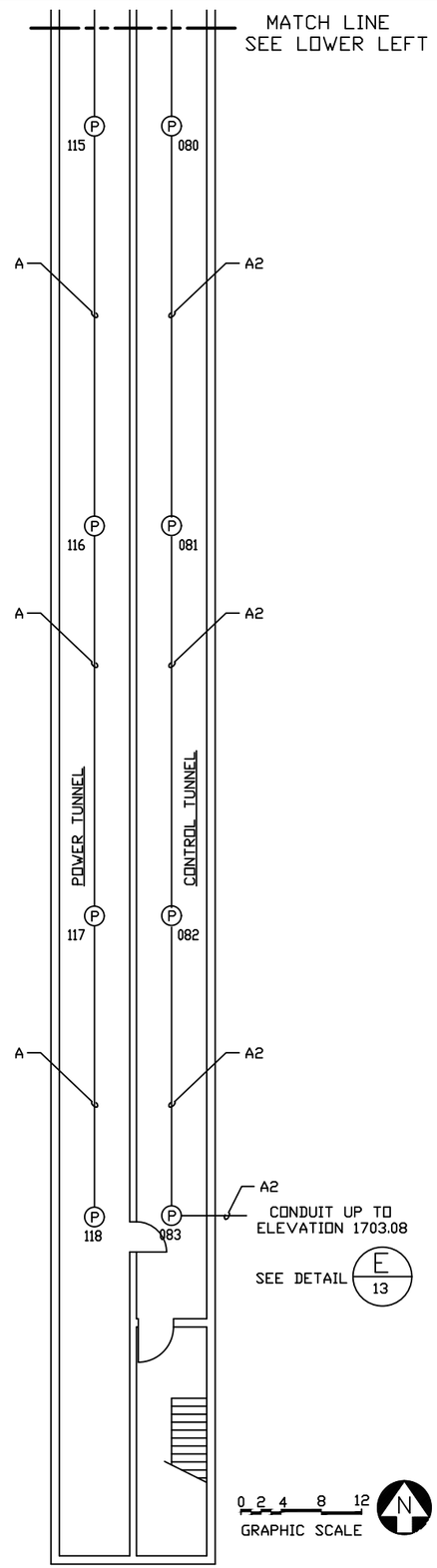

B 13 PARTIAL TUNNELS

SCALE: 1/16"=1'-0"

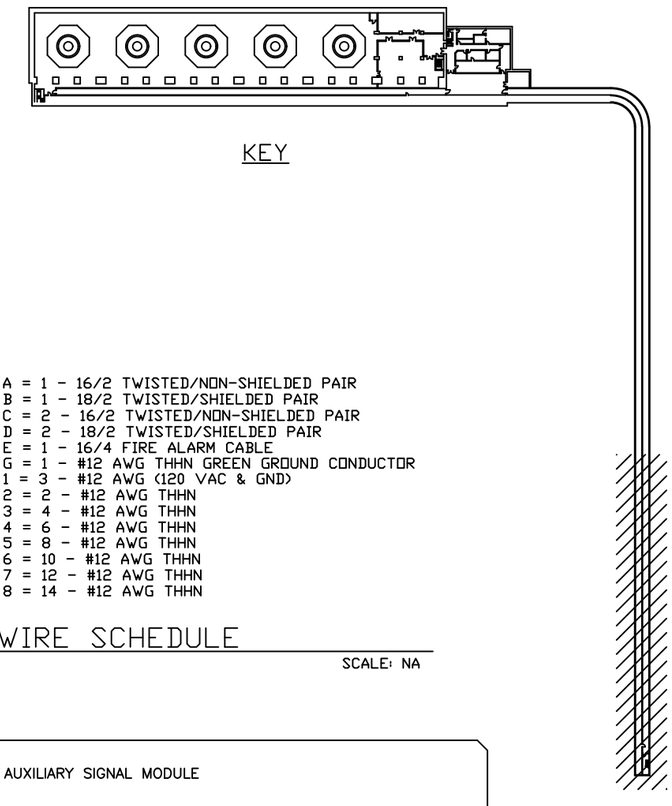

KEY

A = 1 - 16/2 TWISTED/NON-SHIELDED PAIR
B = 1 - 18/2 TWISTED/SHIELDED PAIR
C = 2 - 16/2 TWISTED/NON-SHIELDED PAIR
D = 2 - 18/2 TWISTED/SHIELDED PAIR
E = 1 - 16/4 FIRE ALARM CABLE
G = 1 - #12 AWG THHN GREEN GROUND CONDUCTOR
1 = 3 - #12 AWG (120 VAC & GND)
2 = 2 - #12 AWG THHN
3 = 4 - #12 AWG THHN
4 = 6 - #12 AWG THHN
5 = 8 - #12 AWG THHN
6 = 10 - #12 AWG THHN
7 = 12 - #12 AWG THHN
8 = 14 - #12 AWG THHN

C 13 WIRE SCHEDULE

SCALE: NA

ASM	AUXILIARY SIGNAL MODULE
P	PHOTOELECTRIC SMOKE DETECTOR
M	MANUAL PULL STATION
	HORN/STROBE

D 13 DEVICE LEGEND

SCALE: NA

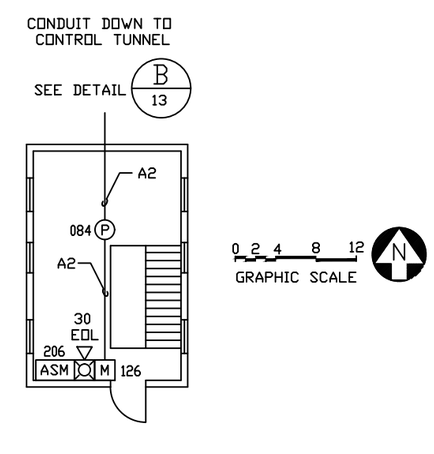

E 13 SWITCHYARD BUILDING - ELEV. 1703.08

SCALE: 1/16"=1'-0"

REVISIONS

NO.	DESCRIPTION	BY	DATE
1.	RELEASE FOR APPROVAL & REVIEW	LDH	10/29/10
2.	ASBUILT	LDH	05/26/11
3.	ADD TRANSFORMERS 1-5	LDH	03/08/19

ELECTRIC SCIENTIFIC COMPANY
Engineered Fire Protection Systems
7505 HIGHWAY 7 MINNEAPOLIS, MINNESOTA 55426
TEL. 952-933-4671 FAX 952-933-6541

S:\GARRISONDAM\FIREALARM

NICET CERTIFICATION # 103683
FIRE ALARM SYSTEMS LEVEL III

DRAWN BY: L. HINZ
NICET CERTIFICATION # 101427
FIRE ALARM SYSTEMS LEVEL IV

CHECKED BY: J. COZZI

GARRISON DAM
PLANT FIRE ALARM SYSTEM
RIVERDALE, NORTH DAKOTA

ELECTRICAL PLAN VIEW
PARTIAL CONTROL & POWER TUNNELS

JOB NO. 400712

SHEET 13 OF SET

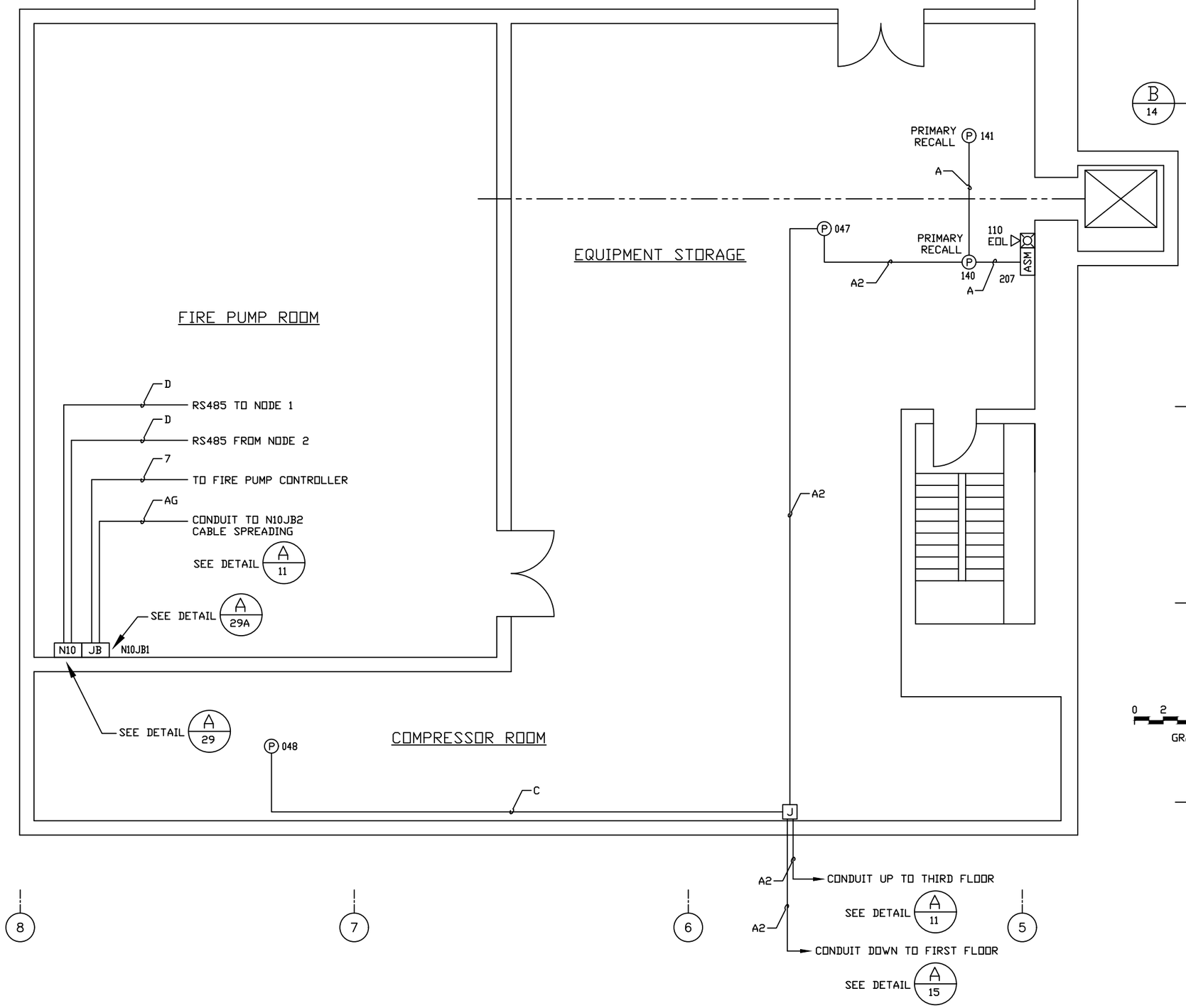

A 14 POWER HOUSE - SECOND FLOOR

SCALE: 1/8"=1'-0"

ASM	AUXILIARY SIGNAL MODULE
P	PHOTOELECTRIC SMOKE DETECTOR
M	MANUAL PULL STATION
	HORN/STROBE

B 14 DEVICE LEGEND

SCALE: NA

A = 1 - 16/2 TWISTED/NON-SHIELDED PAIR
B = 1 - 18/2 TWISTED/SHIELDED PAIR
C = 2 - 16/2 TWISTED/NON-SHIELDED PAIR
D = 2 - 18/2 TWISTED/SHIELDED PAIR
E = 1 - 16/4 FIRE ALARM CABLE
G = 1 - #12 AWG THHN GREEN GROUND CONDUCTOR
1 = 3 - #12 AWG (120 VAC & GND)
2 = 2 - #12 AWG THHN
3 = 4 - #12 AWG THHN
4 = 6 - #12 AWG THHN
5 = 8 - #12 AWG THHN
6 = 10 - #12 AWG THHN
7 = 12 - #12 AWG THHN
8 = 14 - #12 AWG THHN
9 = 30 - #12 AWG THHN
10 = 54 - #12 AWG THHN
11 = 60 - #12 AWG THHN
12 = 20 - #12 AWG THHN

C 14 WIRE SCHEDULE

SCALE: NA

0 2 4 8 12
GRAPHIC SCALE

N

REVISIONS

NO.	DESCRIPTION	BY	DATE
2.	ASBUILT	LDH	05/26/11
3.	ADD ELEVATOR RECALL	LDH	01/26/15
4.	REVISE PER SUBMITTAL	LDH	05/20/15
5.	ASBUILT	LDH	08/31/15
6.	ADD TRANSFORMERS 1-5	LDH	03/08/19

ELECTRIC SCIENTIFIC COMPANY
Engineered Fire Protection Systems
7505 HIGHWAY 7 MINNEAPOLIS, MINNESOTA 55426
TEL. 952-933-4671 FAX 952-933-6541

S:\GARRISONDAM\FIREALARM

NICET CERTIFICATION # 103683 FIRE ALARM SYSTEMS LEVEL III
DRAWN BY: L. HINZ
NICET CERTIFICATION # 101427 FIRE ALARM SYSTEMS LEVEL IV
CHECKED BY: J. COZZI

GARRISON DAM
PLANT FIRE ALARM SYSTEM
RIVERDALE, NORTH DAKOTA

ELECTRICAL PLAN VIEW
POWER HOUSE - SECOND FLOOR

JOB NO. 400712

SHEET 14 OF SET

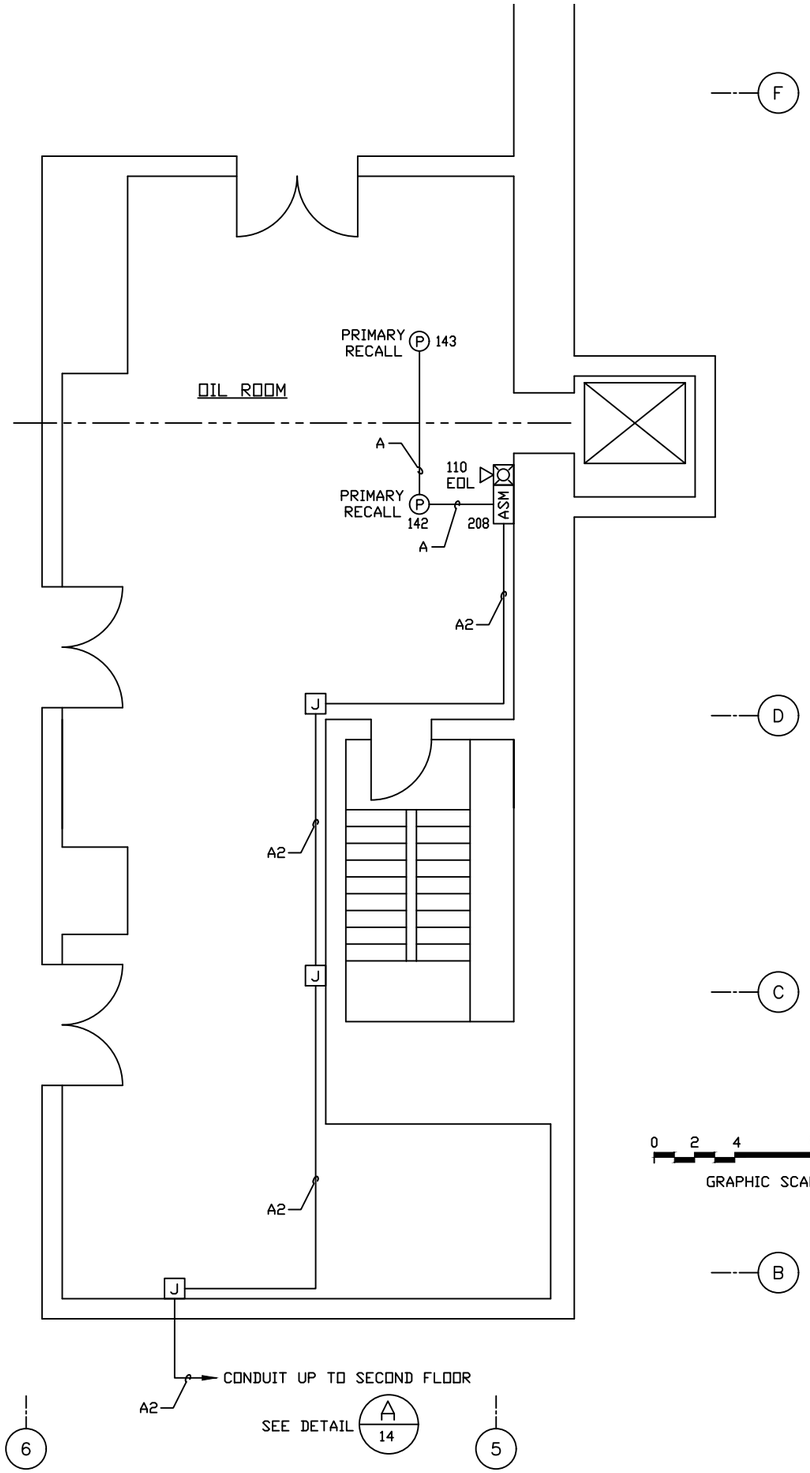

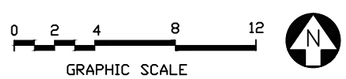

A 15 POWER HOUSE - FIRST FLOOR

SCALE: 1/8"=1'-0"

ASM	AUXILIARY SIGNAL MODULE
P	PHOTOELECTRIC SMOKE DETECTOR
M	MANUAL PULL STATION
	HORN/STROBE

B 15 DEVICE LEGEND

SCALE: NA

A = 1 - 16/2 TWISTED/NON-SHIELDED PAIR
B = 1 - 18/2 TWISTED/SHIELDED PAIR
C = 2 - 16/2 TWISTED/NON-SHIELDED PAIR
D = 2 - 18/2 TWISTED/SHIELDED PAIR
E = 1 - 16/4 FIRE ALARM CABLE
G = 1 - #12 AWG THHN GREEN GROUND CONDUCTOR
1 = 3 - #12 AWG (120 VAC & GND)
2 = 2 - #12 AWG THHN
3 = 4 - #12 AWG THHN
4 = 6 - #12 AWG THHN
5 = 8 - #12 AWG THHN
6 = 10 - #12 AWG THHN
7 = 12 - #12 AWG THHN
8 = 14 - #12 AWG THHN
9 = 30 - #12 AWG THHN
10 = 54 - #12 AWG THHN
11 = 60 - #12 AWG THHN
12 = 20 - #12 AWG THHN

C 15 WIRE SCHEDULE

SCALE: NA

REVISIONS

NO.	DESCRIPTION	BY	DATE
2.	ASBUILT	LDH	05/26/11
3.	ADD ELEVATOR RECALL	LDH	01/26/15
4.	REVISE PER SUBMITTAL	LDH	05/20/15
5.	ASBUILT	LDH	08/31/15
6.	ADD TRANSFORMERS 1-5	LDH	03/08/19

ELECTRIC SCIENTIFIC COMPANY
Engineered Fire Protection Systems
7505 HIGHWAY 7 MINNEAPOLIS, MINNESOTA 55426
TEL. 952-933-4671 FAX 952-933-6541

S:\GARRISONDAM\FIREALARM

NICET CERTIFICATION # 103683
FIRE ALARM SYSTEMS LEVEL III

DRAWN BY: L. HINZ

NICET CERTIFICATION # 101427
FIRE ALARM SYSTEMS LEVEL IV

CHECKED BY: J. COZZI

GARRISON DAM
PLANT FIRE ALARM SYSTEM
RIVERDALE, NORTH DAKOTA

ELECTRICAL PLAN VIEW
POWER HOUSE - FIRST FLOOR

JOB NO. 400712

SHEET 15 OF SET

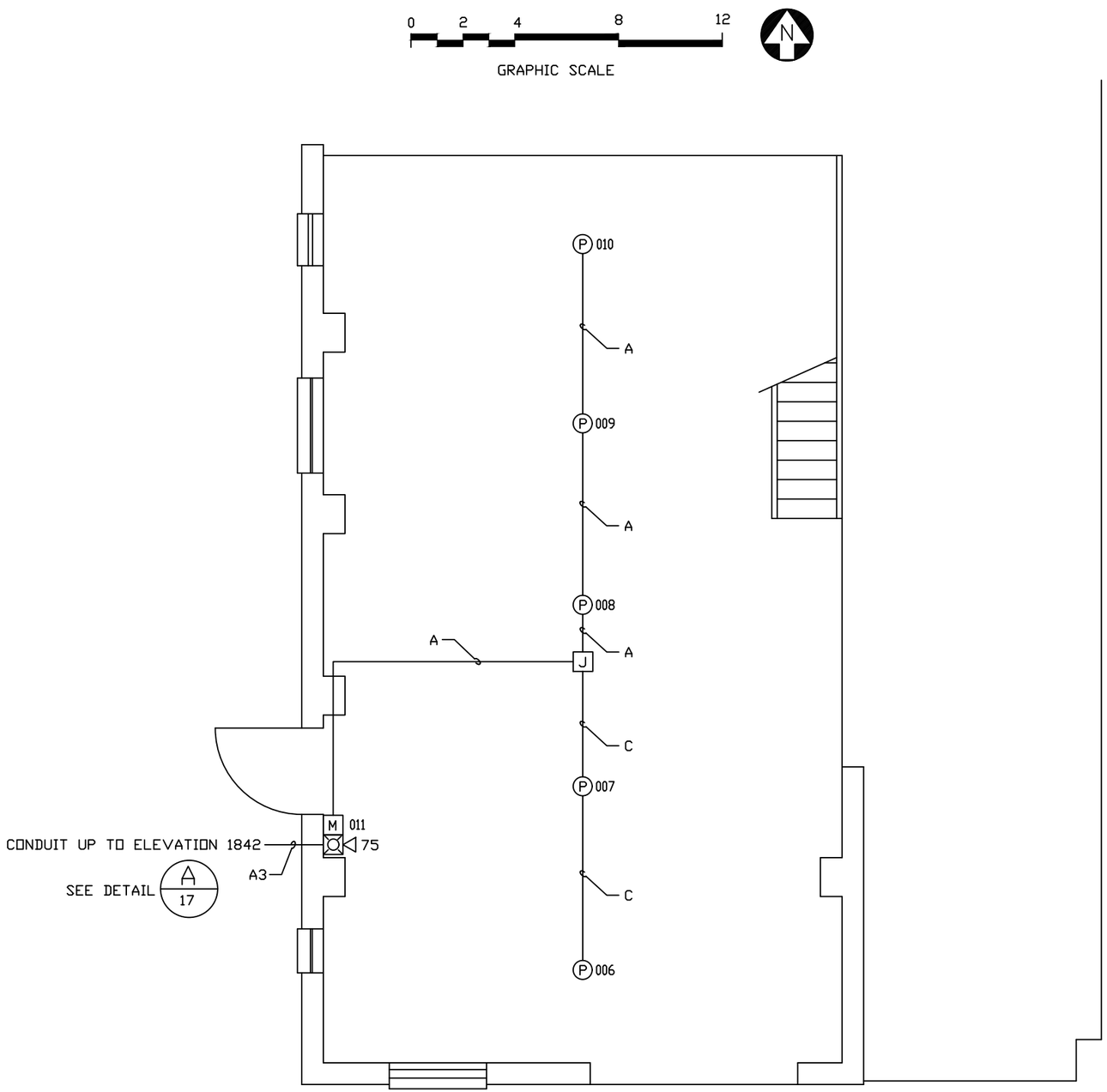

A 16 SPILLWAY MCC BUILDING ELEV. 1825 - ELECTRICAL PLAN VIEW

SCALE: 3/16"=1'-0"

N5	FIRE CONTROL PANEL N5
BAT	BATTERY ENCLOSURE
MED	MEDIA CONVERTOR
M	MANUAL PULL STATION
P	PHOTOELCTRIC SMOKE DETECTOR
	HORN/STROBE

B 16 DEVICE LEGEND

SCALE: NA

A = 1 - 16/2 TWISTED/NON-SHIELDED PAIR
B = 1 - 18/2 TWISTED/SHIELDED PAIR
C = 2 - 16/2 TWISTED/NON-SHIELDED PAIR
D = 2 - 18/2 TWISTED/SHIELDED PAIR
E = 1 - 16/4 FIRE ALARM CABLE
G = 1 - #12 AWG THHN GREEN GROUND CONDUCTOR
1 = 3 - #12 AWG (120 VAC & GND)
2 = 2 - #12 AWG THHN
3 = 4 - #12 AWG THHN
4 = 6 - #12 AWG THHN
5 = 8 - #12 AWG THHN
6 = 10 - #12 AWG THHN
7 = 12 - #12 AWG THHN
8 = 14 - #12 AWG THHN

C 16 WIRE SCHEDULE

SCALE: NA

REVISIONS

NO.	DESCRIPTION	BY	DATE
1.	RELEASE FOR APPROVAL & REVIEW	LDH	10/29/10
2.	ASBUILT	LDH	05/26/11
3.	ADD TRANSFORMERS 1-5	LDH	03/08/19

ELECTRIC SCIENTIFIC COMPANY
Engineered Fire Protection Systems
7505 HIGHWAY 7 MINNEAPOLIS, MINNESOTA 55426
TEL. 952-933-4671 FAX 952-933-6541

S:\GARRISON\DAM\FIREALARM

NICET CERTIFICATION # 103683 FIRE ALARM SYSTEMS LEVEL III
DRAWN BY: L. HINZ
NICET CERTIFICATION # 101427 FIRE ALARM SYSTEMS LEVEL IV
CHECKED BY: J. COZZI

GARRISON DAM
PLANT FIRE ALARM SYSTEM
RIVERDALE, NORTH DAKOTA

ELECTRICAL PLAN VIEW
SPILLWAY MCC BUILDING - ELEVATION 1825

JOB NO. 400712

SHEET 16 OF SET

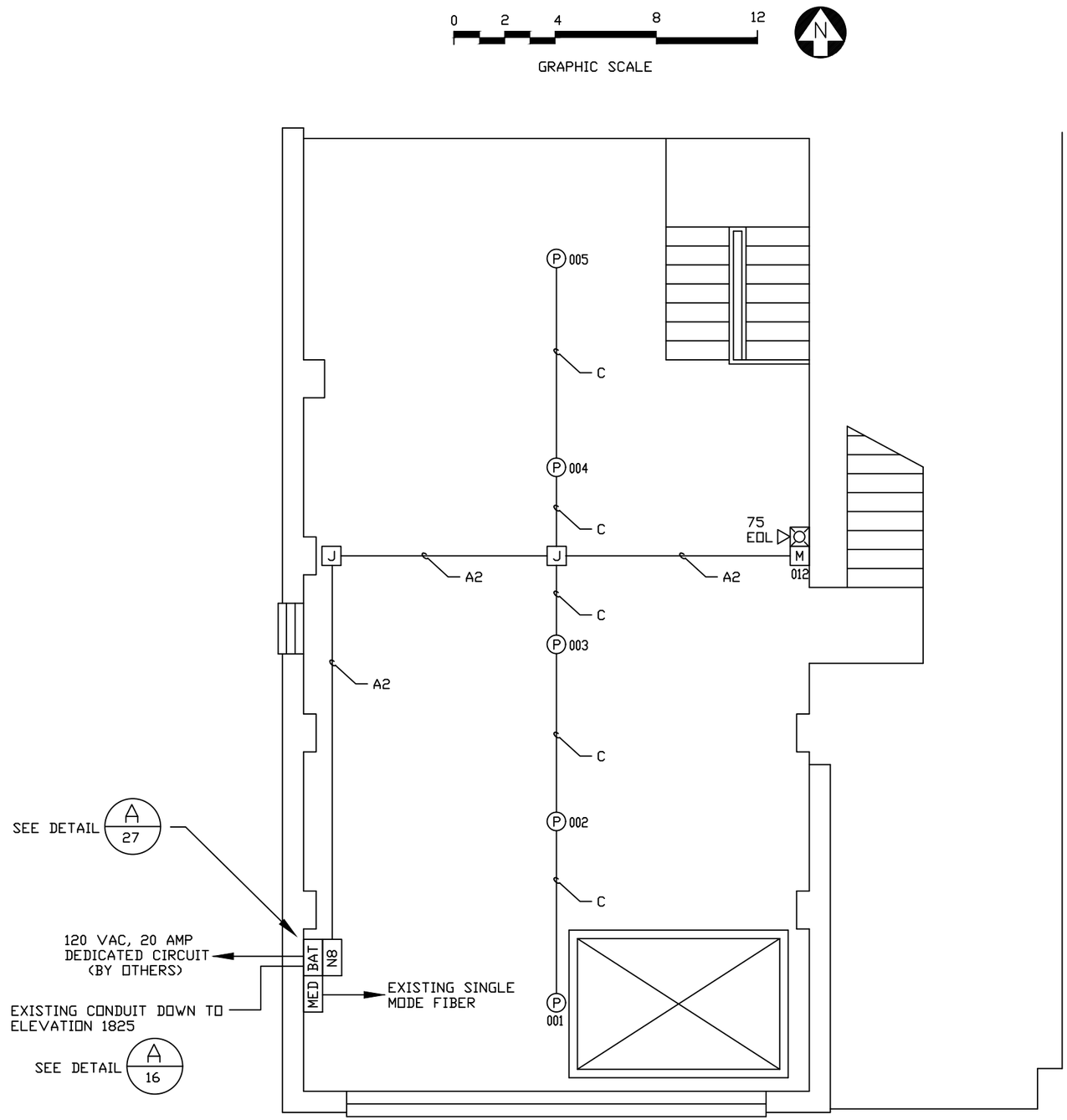

A 17 SPILLWAY MCC BUILDING ELEV. 1842 - ELECTRICAL PLAN VIEW

SCALE: 3/16"=1'-0"

M MANUAL PULL STATION

P PHOTOELCTRIC SMOKE DETECTOR

HORN/STROBE

B 17 DEVICE LEGEND

SCALE: NA

A = 1 - 16/2 TWISTED/NON-SHIELDED PAIR
B = 1 - 18/2 TWISTED/SHIELDED PAIR
C = 2 - 16/2 TWISTED/NON-SHIELDED PAIR
D = 2 - 18/2 TWISTED/SHIELDED PAIR
E = 1 - 16/4 FIRE ALARM CABLE
G = 1 - #12 AWG THHN GREEN GROUND CONDUCTOR
1 = 3 - #12 AWG (120 VAC & GND)
2 = 2 - #12 AWG THHN
3 = 4 - #12 AWG THHN
4 = 6 - #12 AWG THHN
5 = 8 - #12 AWG THHN
6 = 10 - #12 AWG THHN
7 = 12 - #12 AWG THHN
8 = 14 - #12 AWG THHN

C 17 WIRE SCHEDULE

SCALE: NA

REVISIONS

NO.	DESCRIPTION	BY	DATE
1.	RELEASE FOR APPROVAL & REVIEW	LDH	10/29/10
2.	ASBUILT	LDH	05/26/11
3.	ADD TRANSFORMERS 1-5	LDH	03/08/19

ELECTRIC SCIENTIFIC COMPANY
Engineered Fire Protection Systems
7505 HIGHWAY 7 MINNEAPOLIS, MINNESOTA 55426
TEL. 952-933-4671 FAX 952-933-6541

S:\GARRISONDAM\FIREALARM

NICET CERTIFICATION # 103683
FIRE ALARM SYSTEMS LEVEL III

DRAWN BY: L. HINZ
NICET CERTIFICATION # 101427
FIRE ALARM SYSTEMS LEVEL IV

CHECKED BY: J. COZZI

GARRISON DAM
PLANT FIRE ALARM SYSTEM
RIVERDALE, NORTH DAKOTA

ELECTRICAL PLAN VIEW
SPILLWAY MCC BUIDLING - ELEVATION 1842

JOB NO. 400712

SHEET 17 OF SET

N4	FIRE CONTROL PANEL N4
BAT	BATTERY ENCLOSURE
MED	MEDIA CONVERTOR
M	MANUAL PULL STATION
P	PHOTOELCTRIC SMOKE DETECTOR
	HORN/STROBE

B 18 DEVICE LEGEND

SCALE: NA

A = 1 - 16/2 TWISTED/NON-SHIELDED PAIR
B = 1 - 18/2 TWISTED/SHIELDED PAIR
C = 2 - 16/2 TWISTED/NON-SHIELDED PAIR
D = 2 - 18/2 TWISTED/SHIELDED PAIR
E = 1 - 16/4 FIRE ALARM CABLE
G = 1 - #12 AWG THHN GREEN GROUND CONDUCTOR
1 = 3 - #12 AWG (120 VAC & GND)
2 = 2 - #12 AWG THHN
3 = 4 - #12 AWG THHN
4 = 6 - #12 AWG THHN
5 = 8 - #12 AWG THHN
6 = 10 - #12 AWG THHN
7 = 12 - #12 AWG THHN
8 = 14 - #12 AWG THHN

C 18 WIRE SCHEDULE

SCALE: NA

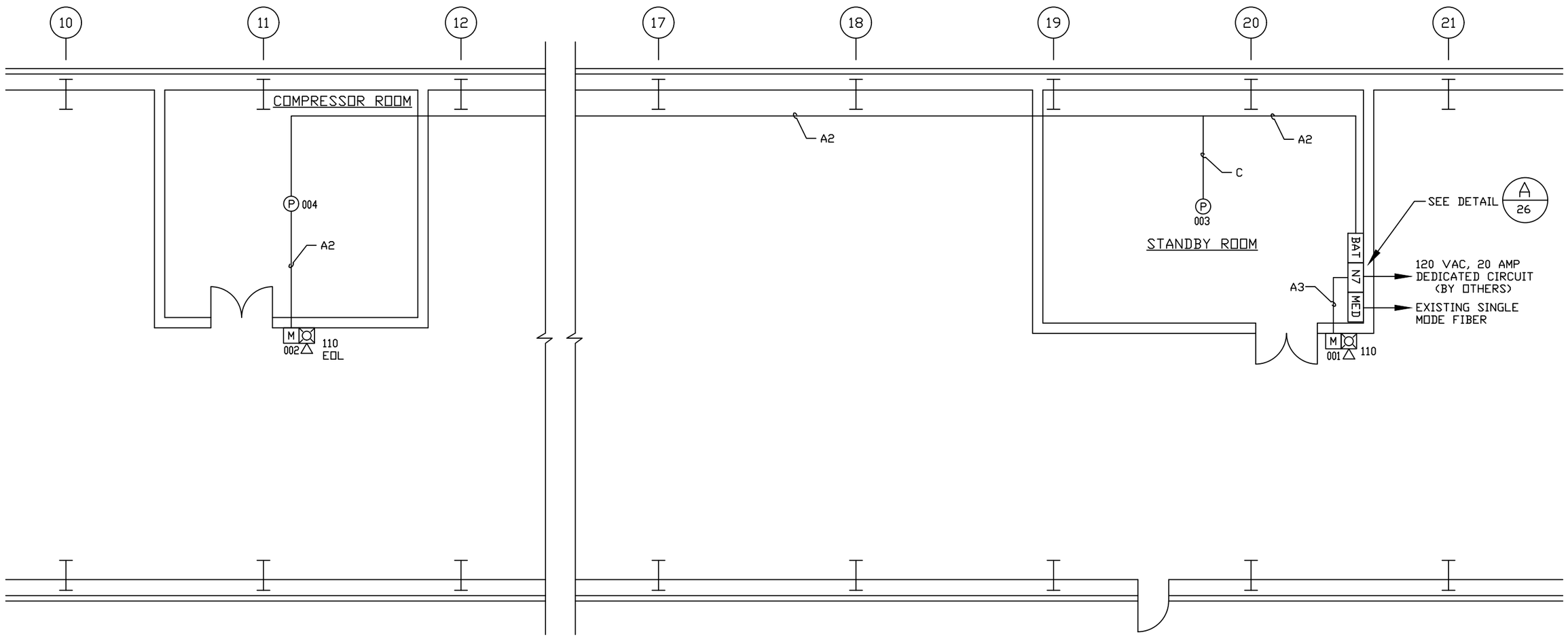

A 18 INTAKE BUILDING - ELECTRICAL PLAN VIEW

SCALE: 1/16"=1'-0"

REVISIONS

NO.	DESCRIPTION	BY	DATE
1.	RELEASE FOR APPROVAL & REVIEW	LDH	10/29/10
2.	ASBUILT	LDH	05/26/11
3.	ADD TRANSFORMERS 1-5	LDH	03/08/19

ELECTRIC SCIENTIFIC COMPANY
Engineered Fire Protection Systems
7505 HIGHWAY 7 MINNEAPOLIS, MINNESOTA 55426
TEL. 952-933-4671 FAX 952-933-6541

S:\GARRISONDAM\FIREALARM

NICET CERTIFICATION # 103683
FIRE ALARM SYSTEMS LEVEL III
DRAWN BY: L. HINZ
NICET CERTIFICATION # 101427
FIRE ALARM SYSTEMS LEVEL IV
CHECKED BY: J. COZZI

GARRISON DAM
PLANT FIRE ALARM SYSTEM
RIVERDALE, NORTH DAKOTA

ELECTRICAL PLAN VIEW
INTAKE BUILDING

JOB NO. 400712

SHEET 18 OF SET

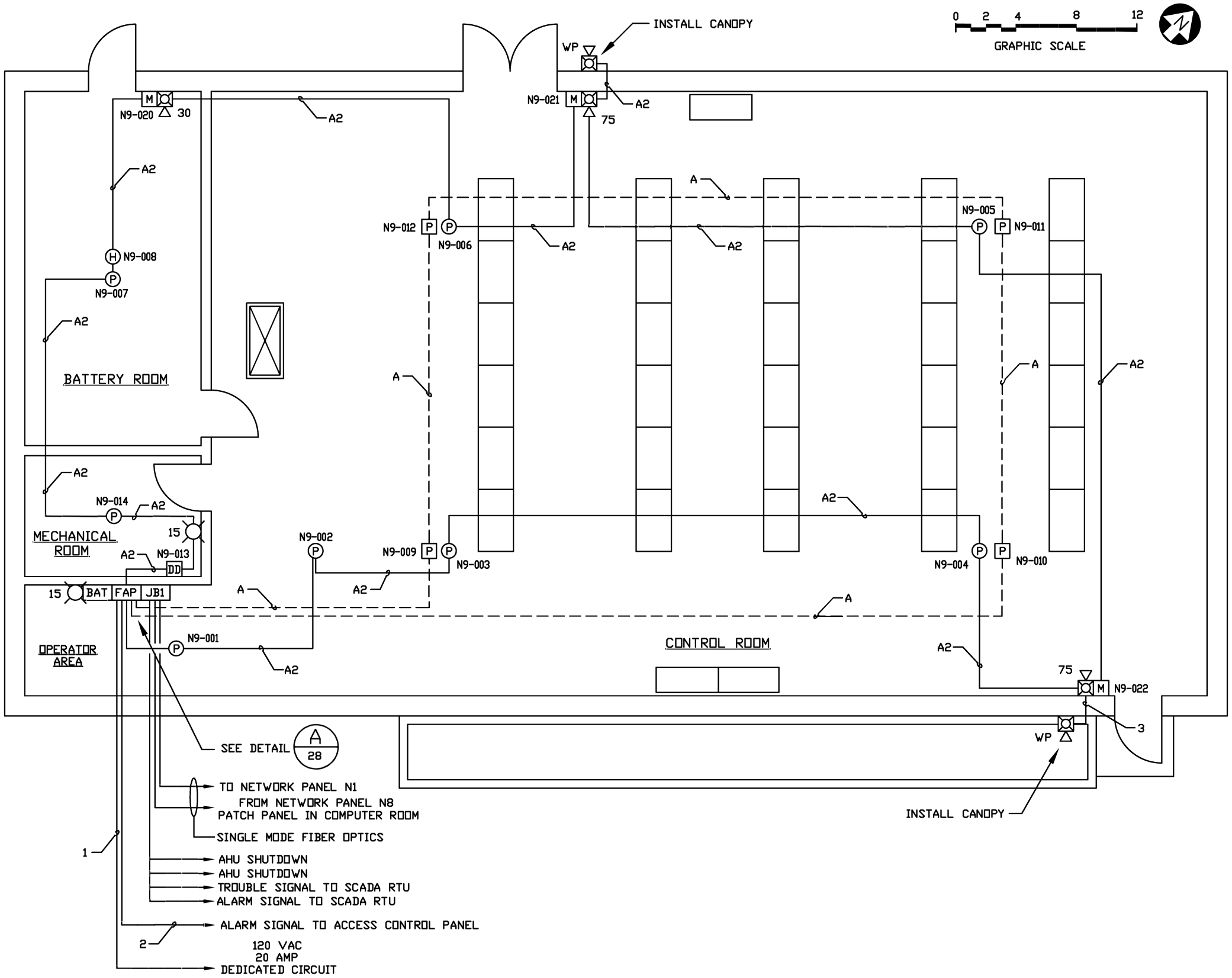

A 19 ELECTRICAL SWITCH YARD BUILDING

SCALE: 1/8"=1'-0"

0 2 4 8 12
GRAPHIC SCALE

A = 1 - 16/2 TWISTED/NON-SHIELDED PAIR
B = 1 - 18/2 TWISTED/SHIELDED PAIR
C = 2 - 16/2 TWISTED/NON-SHIELDED PAIR
D = 2 - 18/2 TWISTED/SHIELDED PAIR
E = 1 - 16/4 FIRE ALARM CABLE
G = 1 - #12 AWG THHN GREEN GROUND CONDUCTOR
1 = 3 - #12 AWG (120 VAC & GND)
2 = 2 - #14 AWG THHN
3 = 4 - #14 AWG THHN
4 = 6 - #14 AWG THHN
5 = 8 - #14 AWG THHN
6 = 10 - #14 AWG THHN
7 = 12 - #14 AWG THHN
8 = 14 - #14 AWG THHN

B 19 WIRE SCHEDULE

SCALE: NA

FAP	FIRE CONTROL PANEL
BAT	BATTERY ENCLOSURE
OCC	FIBER OPTIC CARD
P	PHOTOELECTRIC SMOKE DETECTOR
P	PHOTOELECTRIC SMOKE DETECTOR – SUBFLOOR
H	HEAT DETECTOR
DD	DUCT DETECTOR
M	MANUAL PULL STATION
	HORN/STROBE
	STROBE
R	RELAY BOX

C 19 DEVICE LEGEND

SCALE: NA

REVISIONS

NO.	DESCRIPTION	BY	DATE
1.	RELEASE FOR APPROVAL & REVIEW	LDH	04/25/14
2.	REVISE PER REVIEW	LDH	06/03/14
3.	ASBUILT	LDH	08/12/15
4.	ADD TRANSFORMERS 1-5	LDH	03/08/19

ELECTRIC SCIENTIFIC COMPANY
Engineered Fire Protection Systems
7505 HIGHWAY 7 MINNEAPOLIS, MINNESOTA 55426
TEL. 952-933-4671 FAX 952-933-6541

S:\WORKSCHEMA\SWITCHYARDBLDG

NICET CERTIFICATION # 103683 FIRE ALARM SYSTEMS LEVEL III
DRAWN BY: L. HINZ
NICET CERTIFICATION # 101427 FIRE ALARM SYSTEMS LEVEL IV
CHECKED BY: J. COZZI

GARRISON DAM
PLANT FIRE ALARM SYSTEM
RIVERDALE, NORTH DAKOTA

ELECTRICLA PLAN VIEW
ELECTRICAL SWITCH YARD BUILDING

JOB NO. 400712

SHEET 19 OF SET

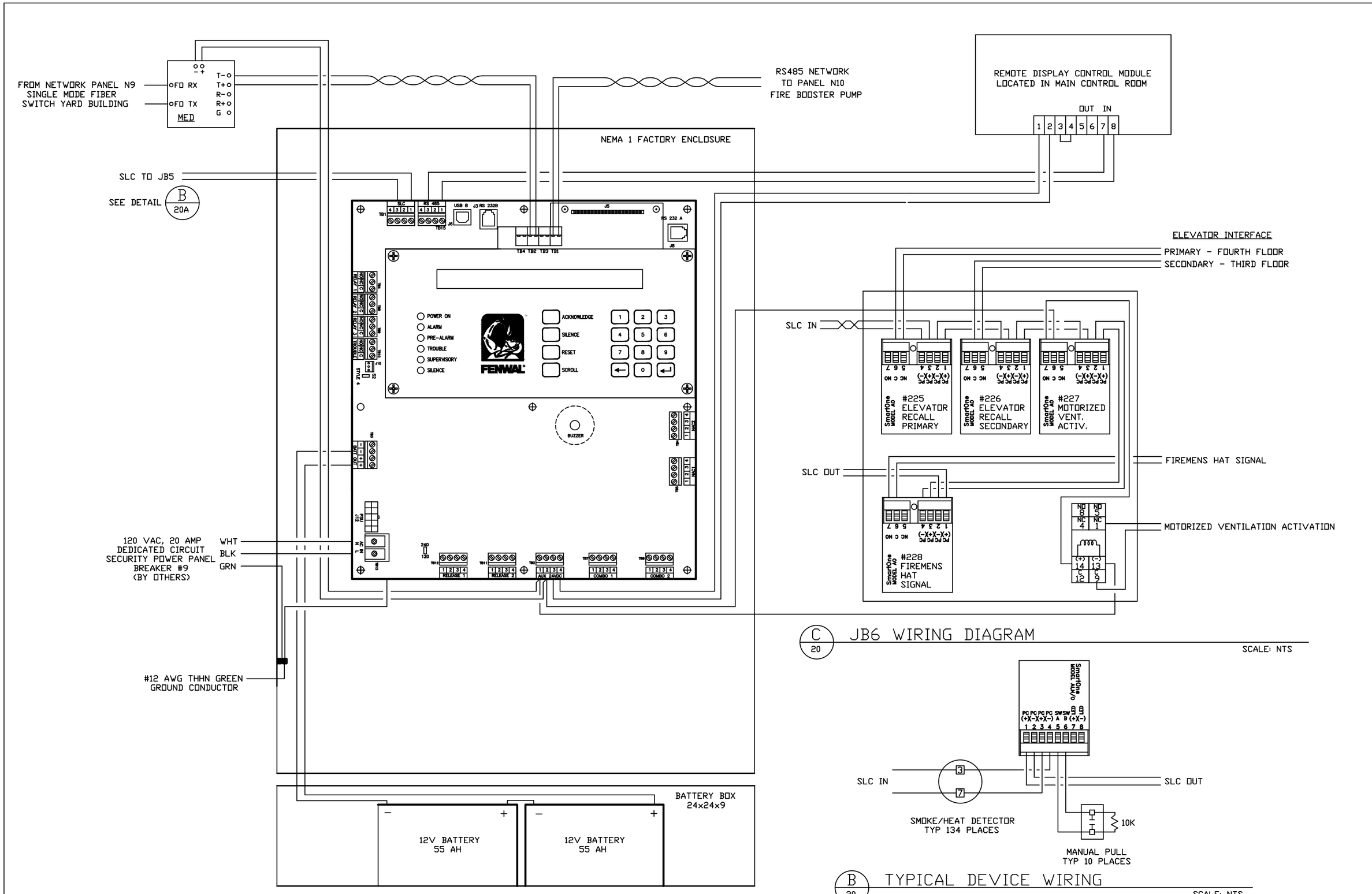

C 20 JB6 WIRING DIAGRAM

SCALE: NTS

B 20 TYPICAL DEVICE WIRING

SCALE: NTS

A 20 FIRE CONTROL PANEL N1 WIRING DIAGRAM - COMPUTER ROOM

SCALE: NTS

REVISIONS

NO.	DESCRIPTION	BY	DATE
3.	ADD PANEL N9	LDH	04/25/14
4.	ADD ELEVATOR RECALL	LDH	01/26/15
5.	ADD FAN/MOTORIZED VENT	LDH	07/13/15
6.	ASBUILT	LDH	08/31/15
7.	ADD TRANSFORMERS 1-5	LDH	03/08/19

ELECTRIC SCIENTIFIC COMPANY
Engineered Fire Protection Systems
7505 HIGHWAY 7 MINNEAPOLIS, MINNESOTA 55426
TEL. 952-933-4671 FAX 952-933-6541

S:\GARRISONDAM\FIREALARM

NICET CERTIFICATION # 103683
FIRE ALARM SYSTEMS LEVEL III

DRAWN BY: L. HINZ

NICET CERTIFICATION # 101427
FIRE ALARM SYSTEMS LEVEL IV

CHECKED BY: J. COZZI

GARRISON DAM
PLANT FIRE ALARM SYSTEM
RIVERDALE, NORTH DAKOTA

FIRE CONTROL PANEL WIRING DIAGRAM
NODE 1 - COMPUTER ROOM

JOB NO. 400712

SHEET 20 OF SET

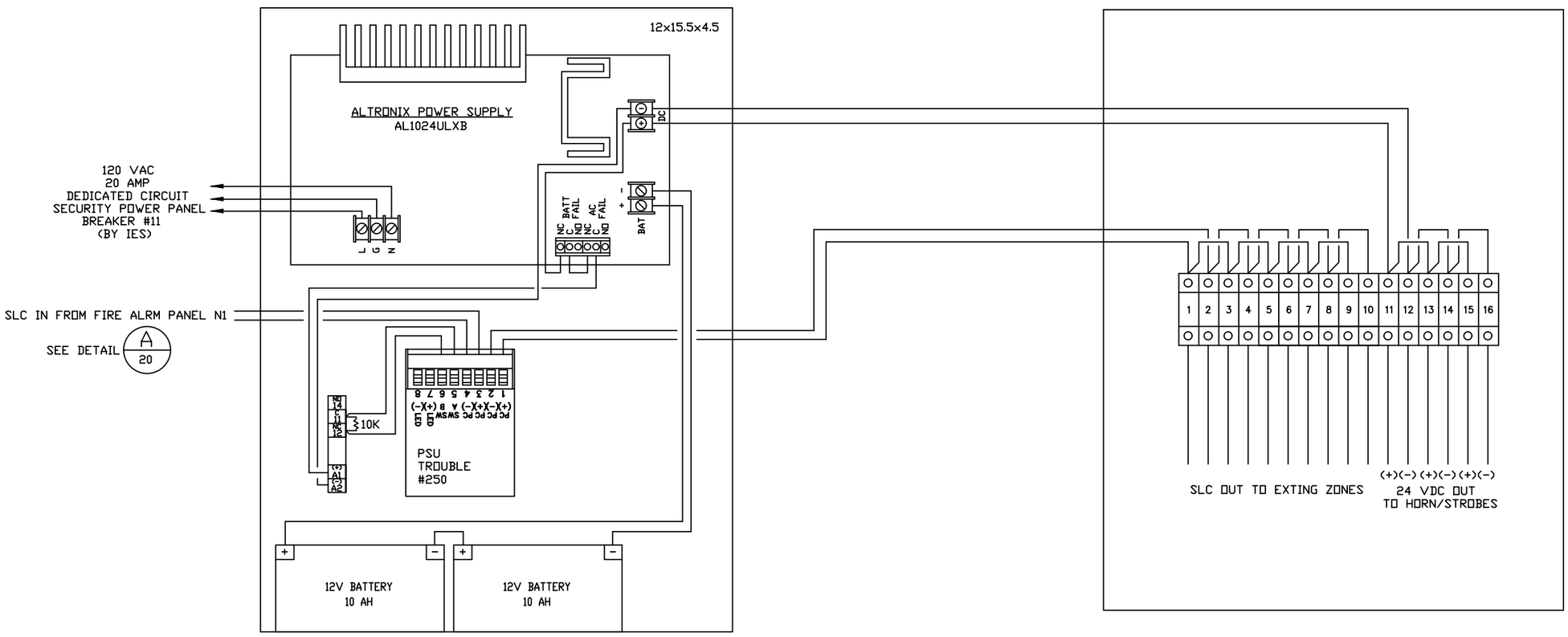

A 20A POWER SUPPLY #1 WIRING DIAGRAM - COMPUTER ROOM

SCALE: NTS

B 20A JB5 (EXISTING) WIRING DIAGRAM - CABLE SPREADING

SCALE: NTS

REVISIONS

NO.	DESCRIPTION	BY	DATE
1.	RELEASE FOR APPROVAL & REVIEW	LDH	10/29/10
2.	ASBUILT	LDH	05/26/11
3.	ADD TRANSFORMERS 1-5	LDH	03/08/19

ELECTRIC SCIENTIFIC COMPANY
Engineered Fire Protection Systems
7505 HIGHWAY 7 MINNEAPOLIS, MINNESOTA 55426
TEL. 952-933-4671 FAX 952-933-6541

S:\GARRISONDAM\FIREALARM

NICET CERTIFICATION # 103683
FIRE ALARM SYSTEMS LEVEL III

DRAWN BY: L. HINZ

NICET CERTIFICATION # 101427
FIRE ALARM SYSTEMS LEVEL IV

CHECKED BY: J. COZZI

GARRISON DAM
PLANT FIRE ALARM SYSTEM
RIVERDALE, NORTH DAKOTA

WIRING DIAGRAM
POWER SUPPLY #1 & N1JB5

JOB NO. 400712

SHEET 20A OF SET

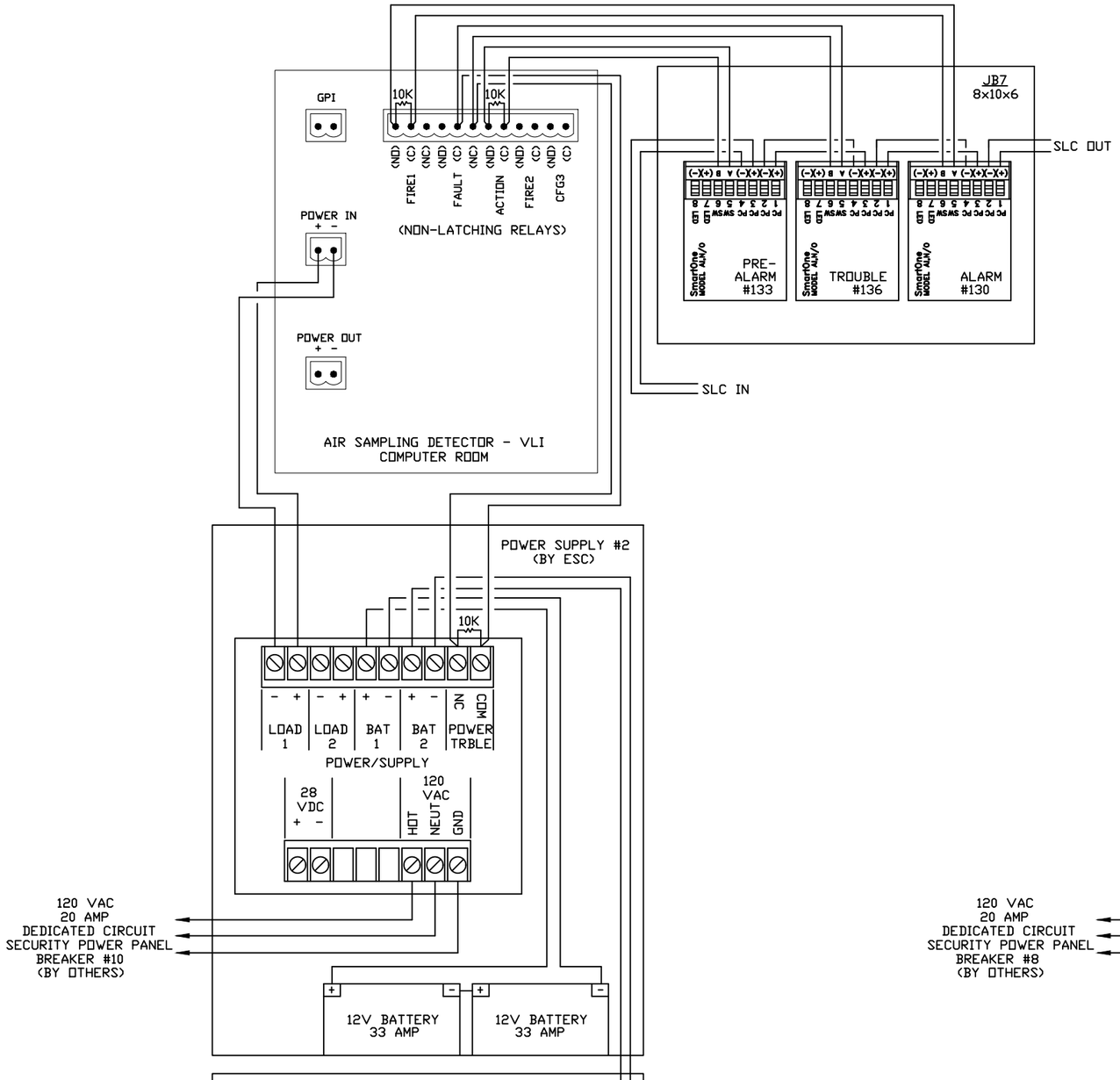

A 20B DETECTOR WIRING DIAGRAM - PPCS ROOM

SCALE: NTS

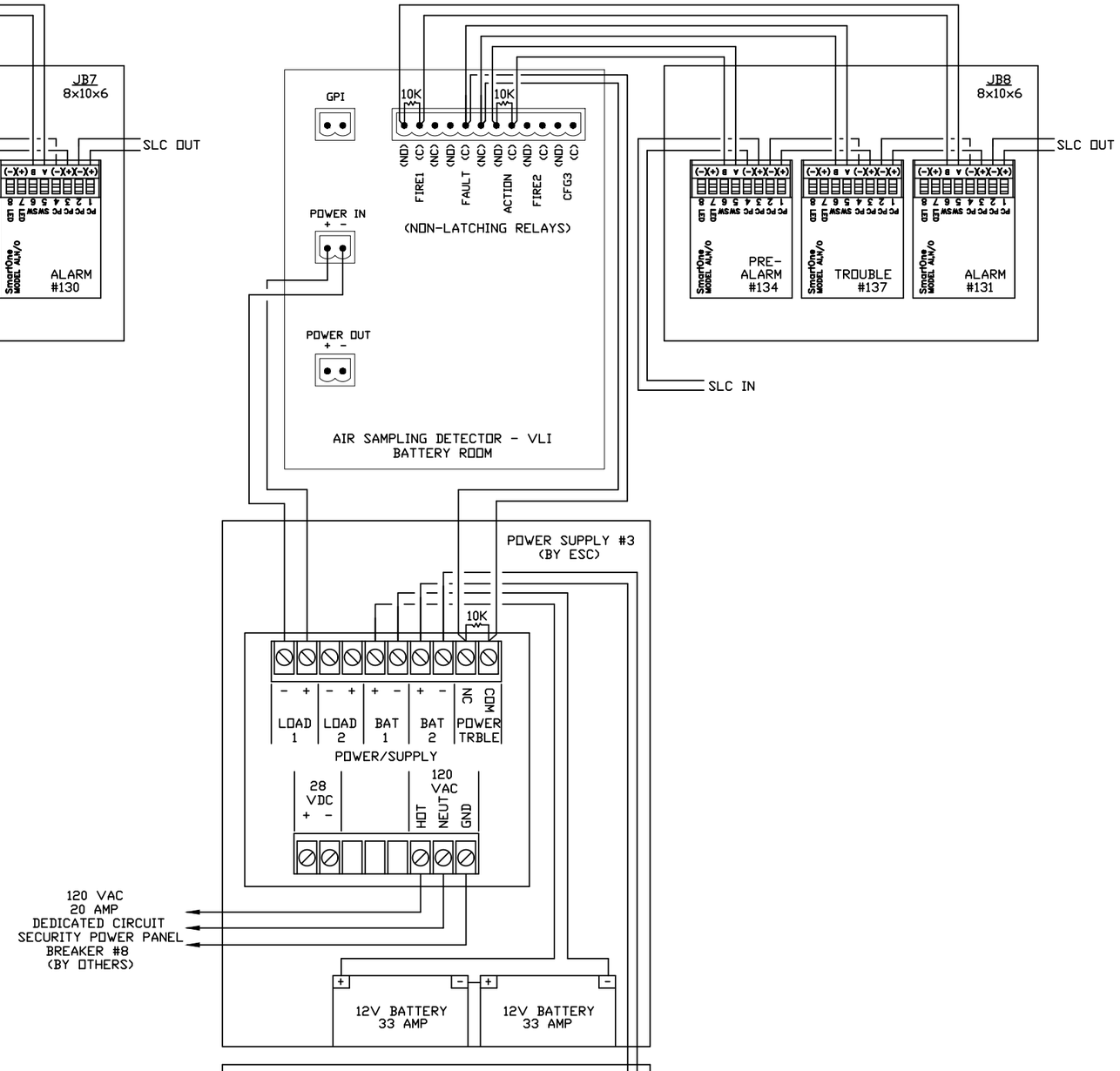

B 20B DETECTOR WIRING DIAGRAM - BATTERY RM

SCALE: NTS

REVISIONS

NO.	DESCRIPTION	BY	DATE
2.	ASBUILT	LDH	05/26/11
3.	ADD TRANSFORMERS 1-5	LDH	03/08/19
4.	AIR SAMPLING DETECTOR UPGRADE	LDH	06/10/20
5.	ADD POWER SUPPLY MONITORING	LDH	01/06/21
6.	ASBUILT	LDH	01/26/21

ELECTRIC SCIENTIFIC COMPANY
Engineered Fire Protection Systems
7505 HIGHWAY 7 MINNEAPOLIS, MINNESOTA 55426
TEL. 952-933-4671 FAX 952-933-6541

S:\GARRISONDAM\FIREALARM

NICET CERTIFICATION # 103683
FIRE ALARM SYSTEMS LEVEL III

DRAWN BY: L. HINZ

NICET CERTIFICATION # 101427
FIRE ALARM SYSTEMS LEVEL IV

CHECKED BY: J. COZZI

GARRISON DAM
PLANT FIRE ALARM SYSTEM
RIVERDALE, NORTH DAKOTA

WIRING DIAGRAM
AIR SAMPLING DETECTOR WIRING DIAGRAM

JOB NO. 400712

SHEET 20B OF SET

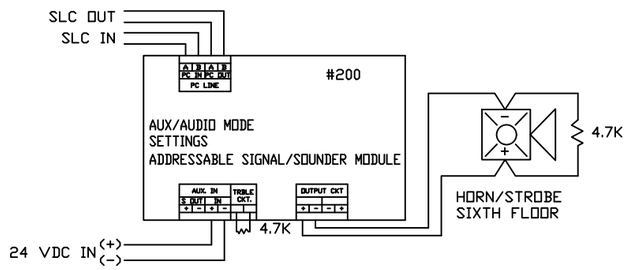

A 20C SIXTH FLOOR

SCALE: NTS

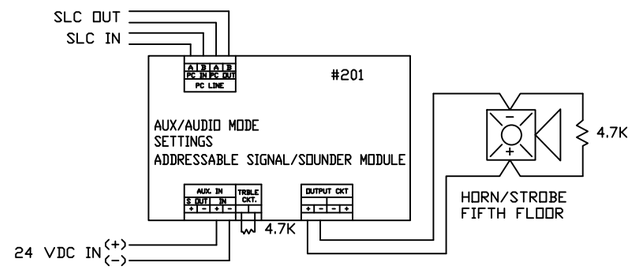

D 20C FIFTH FLOOR

SCALE: NTS

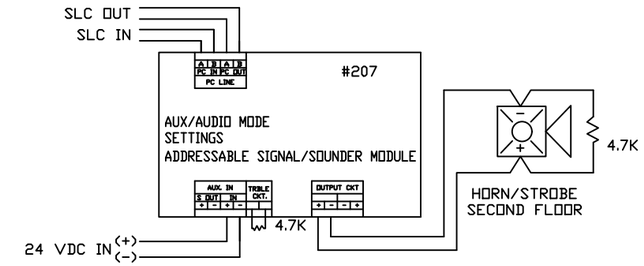

E 20C SECOND FLOOR

SCALE: NTS

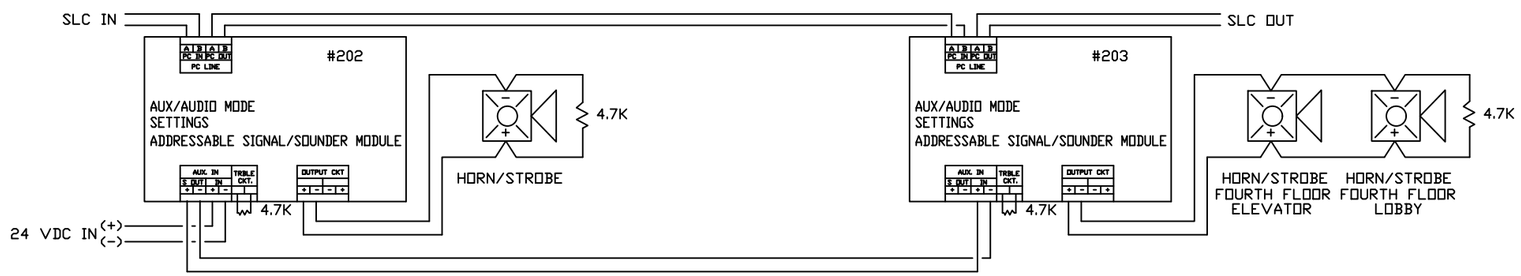

B 20C FOURTH FLOOR

SCALE: NTS

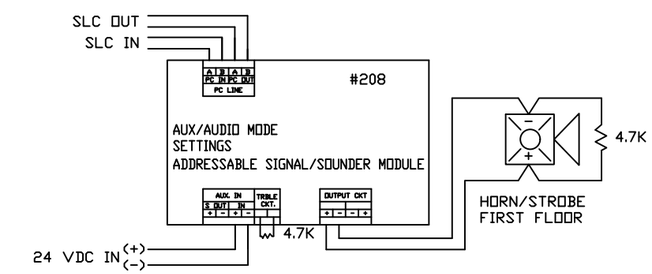

F 20C FIRST FLOOR

SCALE: NTS

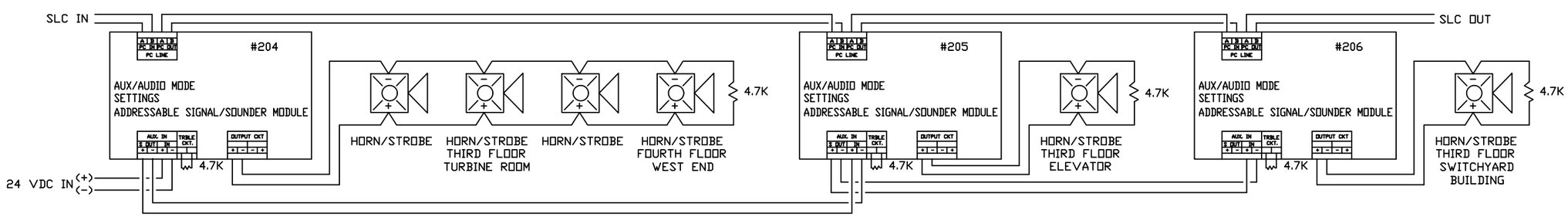

C 20C THIRD FLOOR

SCALE: NTS

REVISIONS

NO.	DESCRIPTION	BY	DATE
1.	RELEASE FOR APPROVAL & REVIEW	LDH	10/29/10
2.	ASBUILT	LDH	05/26/11
3.	ADD TRANSFORMERS 1-5	LDH	03/08/19

ELECTRIC SCIENTIFIC COMPANY
Engineered Fire Protection Systems
7505 HIGHWAY 7 MINNEAPOLIS, MINNESOTA 55426
TEL. 952-933-4671 FAX 952-933-6541

S:\GARRISON\DAM\FIREALARM

NICET CERTIFICATION # 103683
FIRE ALARM SYSTEMS LEVEL III

DRAWN BY: L. HINZ

NICET CERTIFICATION # 101427
FIRE ALARM SYSTEMS LEVEL IV

CHECKED BY: J. COZZI

GARRISON DAM
PLANT FIRE ALARM SYSTEM
RIVERDALE, NORTH DAKOTA

WIRING DIAGRAMS
HORN/STROBE WIRING

JOB NO. 400412

SHEET 20C OF SET

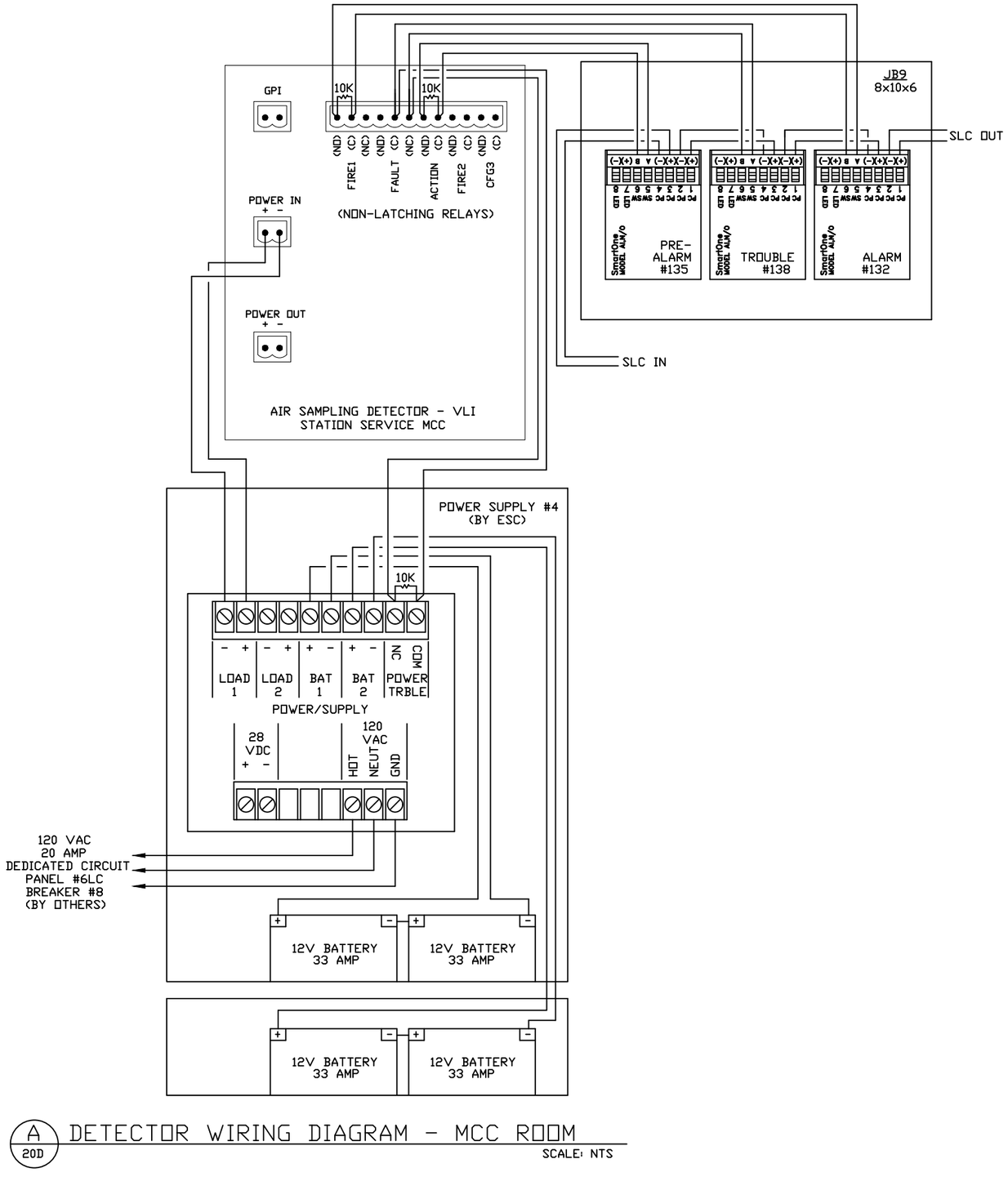

A 20D DETECTOR WIRING DIAGRAM - MCC ROOM

SCALE: NTS

REVISIONS

NO.	DESCRIPTION	BY	DATE
1.	AIR SAMPLING DETECTOR UPGRADE	LDH	06/10/20
2.	ADD POWER SUPPLY MONITORING	LDH	01/06/21
3.	ASBUILT	LDH	01/26/21

ELECTRIC SCIENTIFIC COMPANY
Engineered Fire Protection Systems
7505 HIGHWAY 7 MINNEAPOLIS, MINNESOTA 55426
TEL. 952-933-4671 FAX 952-933-6541

S:\GARRISONDAM\FIREALARM

NICET CERTIFICATION # 103683
FIRE ALARM SYSTEMS LEVEL III

NICET CERTIFICATION # 101427
FIRE ALARM SYSTEMS LEVEL IV

DRAWN BY: L. HINZ

CHECKED BY: J. COZZI

GARRISON DAM
PLANT FIRE ALARM SYSTEM
RIVERDALE, NORTH DAKOTA

WIRING DIAGRAM
AIR SAMPLING DETECTOR WIRING DIAGRAM

JOB NO. 400712

SHEET 20D OF SET

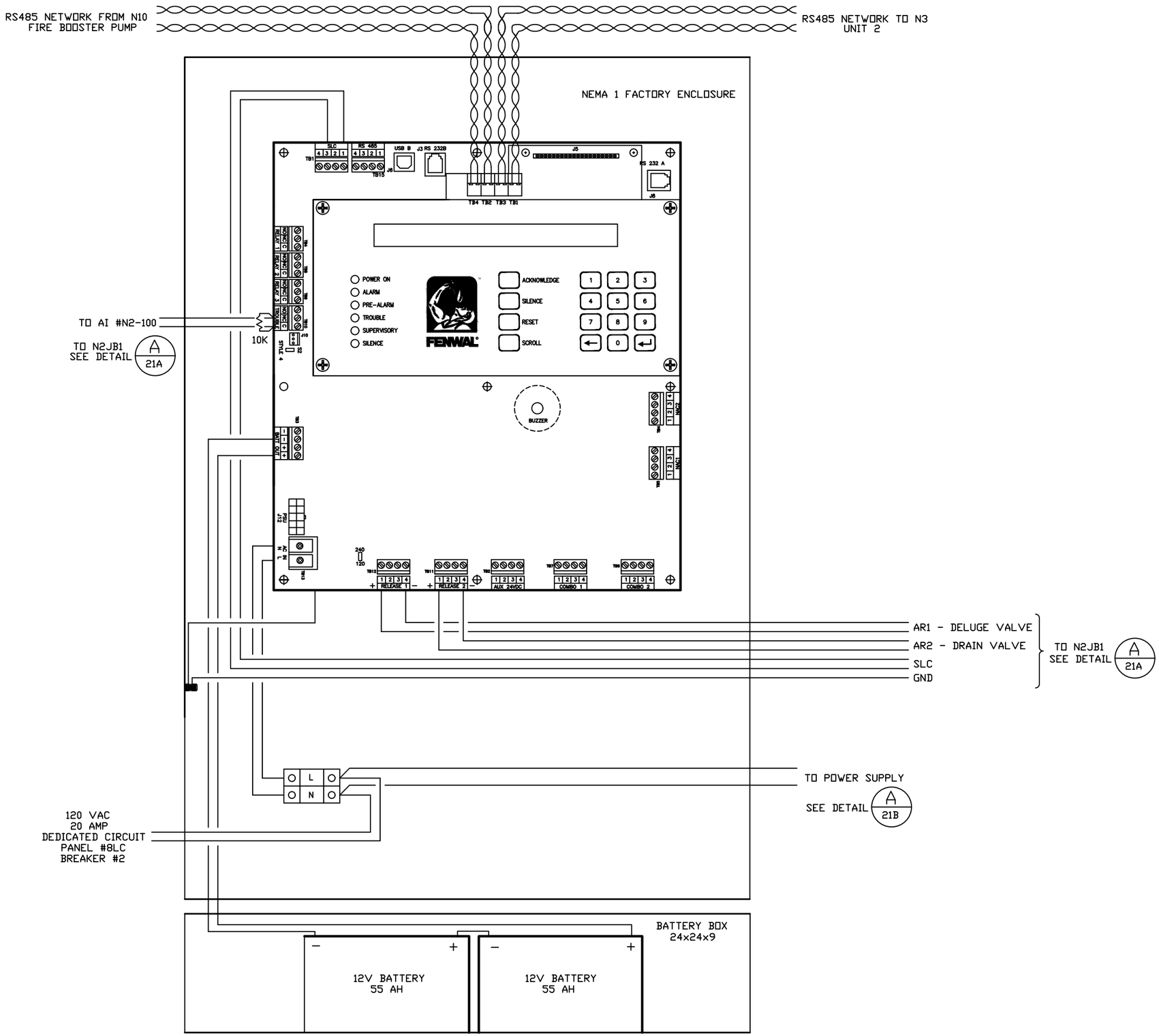

A 21 FIRE CONTROL PANEL N2 WIRING DIAGRAM - UNIT 1 TRANSFORMER

SCALE: NTS

REVISIONS

NO.	DESCRIPTION	BY	DATE
1.	ADD TRANSFORMERS 1-5	LDH	03/08/19

ELECTRIC SCIENTIFIC COMPANY
Engineered Fire Protection Systems
7505 HIGHWAY 7 MINNEAPOLIS, MINNESOTA 55426
TEL. 952-933-4671 FAX 952-933-6541

S:\WORK\DAKOTA\GARRISON\DAM

NICET CERTIFICATION # 103683
FIRE ALARM SYSTEMS LEVEL III

DRAWN BY: L. HINZ

NICET CERTIFICATION # 101427
FIRE ALARM SYSTEMS LEVEL IV

CHECKED BY: J. COZZI

GARRISON DAM
PLANT FIRE ALARM SYSTEM
MISSOURI RIVER, NORTH DAKOTA

FIRE CONTROL PANEL N2 WIRING DIAGRAM
UNIT 1 TRANSFORMER

JOB NO. 400712

SHEET 21 OF SET

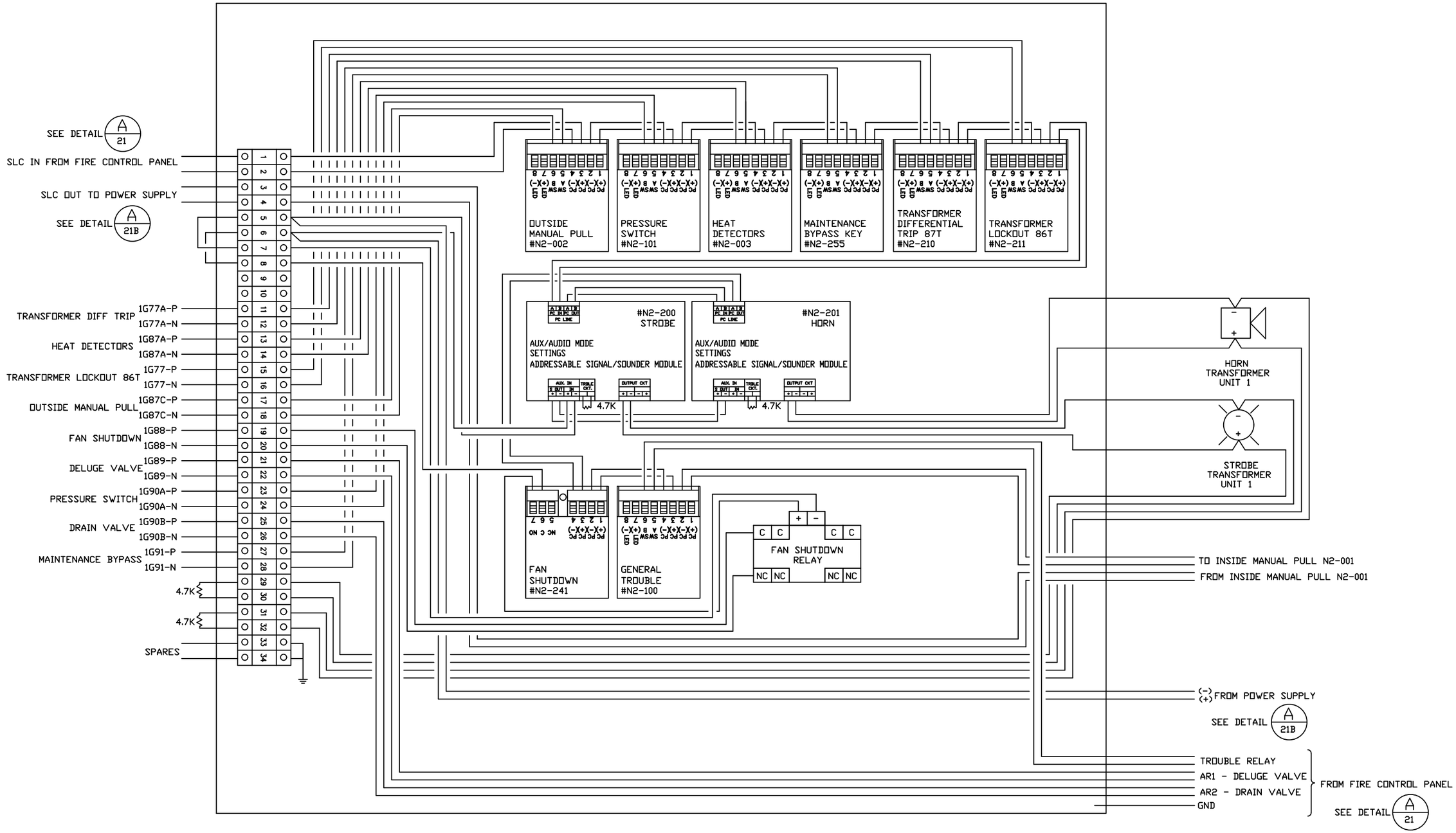

A/21A N2JB1 WIRING DIAGRAM - UNIT 1 TRANSFORMER ELEVATION 1684'-0"

SCALE: NTS

REVISIONS

NO.	DESCRIPTION	BY	DATE
1.	ADD TRANSFORMERS 1-5	LDH	03/08/19

ELECTRIC SCIENTIFIC COMPANY
Engineered Fire Protection Systems
7505 HIGHWAY 7 MINNEAPOLIS, MINNESOTA 55426
TEL. 952-933-4671 FAX 952-933-6541

S:\GARRISONDAM\UNIT4

NICET CERTIFICATION # 103683 FIRE ALARM SYSTEMS LEVEL III
NICET CERTIFICATION # 101427 FIRE ALARM SYSTEMS LEVEL IV

DRAWN BY: L. HINZ
CHECKED BY: J. COZZI

GARRISON DAM
PLANT FIRE ALARM SYSTEM
RIVERDALE, NORTH DAKOTA

N2JB1 WIRING DIAGRAM
UNIT 1 TRANSFORMER

JOB NO. 400712

SHEET 21A OF SET

CALC. BY: L.HINZ

CIRCUIT	SUPV. CURRENT	NO.	TOTAL	ALARM CURRENT	NO.	TOTAL
PANEL:						
FN6000	.20	1	.20	.650	1	.650
FIELD:						
ACID	.000450	8	.0036	.000450	8	.0036
NETWORK CARD	.07	1	.07	.07	1	.07
ASM	.000500	2	.001	.000500	2	.001
AROD	.000400	1	.000400	.000400	1	.000400
SOLENOID				.417	2	.834

SUPERVISORY TOTAL: .275 ALARM TOTAL: 1.559

SUPERVISORY BATTERY CURRENT: .275 X 90 HOURS = 24.75 AMP/HOURS

TOTAL ALARM CURRENT: 1.559 X .083 HOURS = .129397 AMP/HOURS

SUB-TOTAL: 24.879397 AMP/HOURS

1.1 DE-RATING FACTOR = 27.367336 AMP/HOURS

BATTERY SIZE USED: 55 AMP/HOURS

TOTAL REQUIRED: 27.36 AMP/HOURS

A 21B BATTERY CALCULATION - PANEL N2

SCALE: NA

CALC. BY: L.HINZ

CIRCUIT	SUPV. CURRENT	NO.	TOTAL	ALARM CURRENT	NO.	TOTAL
PANEL:						
AL1024ULX	.05	1	.05	.05	1	.05
FIELD: FENWAL						
HORN				.55	1	.55
STROBE				.65	1	.65
RELAY				.065	1	.065

SUPERVISORY TOTAL: .05 ALARM TOTAL: 1.315

SUPERVISORY BATTERY CURRENT: .05 X 90 HOURS = 4.5 AMP/HOURS

TOTAL ALARM CURRENT: 1.315 X .083 HOURS = .109145 AMP/HOURS

SUB-TOTAL: 4.609145 AMP/HOURS

1.1 DE-RATING FACTOR = 5.0700595 AMP/HOURS

BATTERY SIZE USED: 10 AMP/HOURS

TOTAL REQUIRED: 5.07 AMP/HOURS

B 21B BATTERY CALCULATION - POWER SUPPLY

SCALE: NA

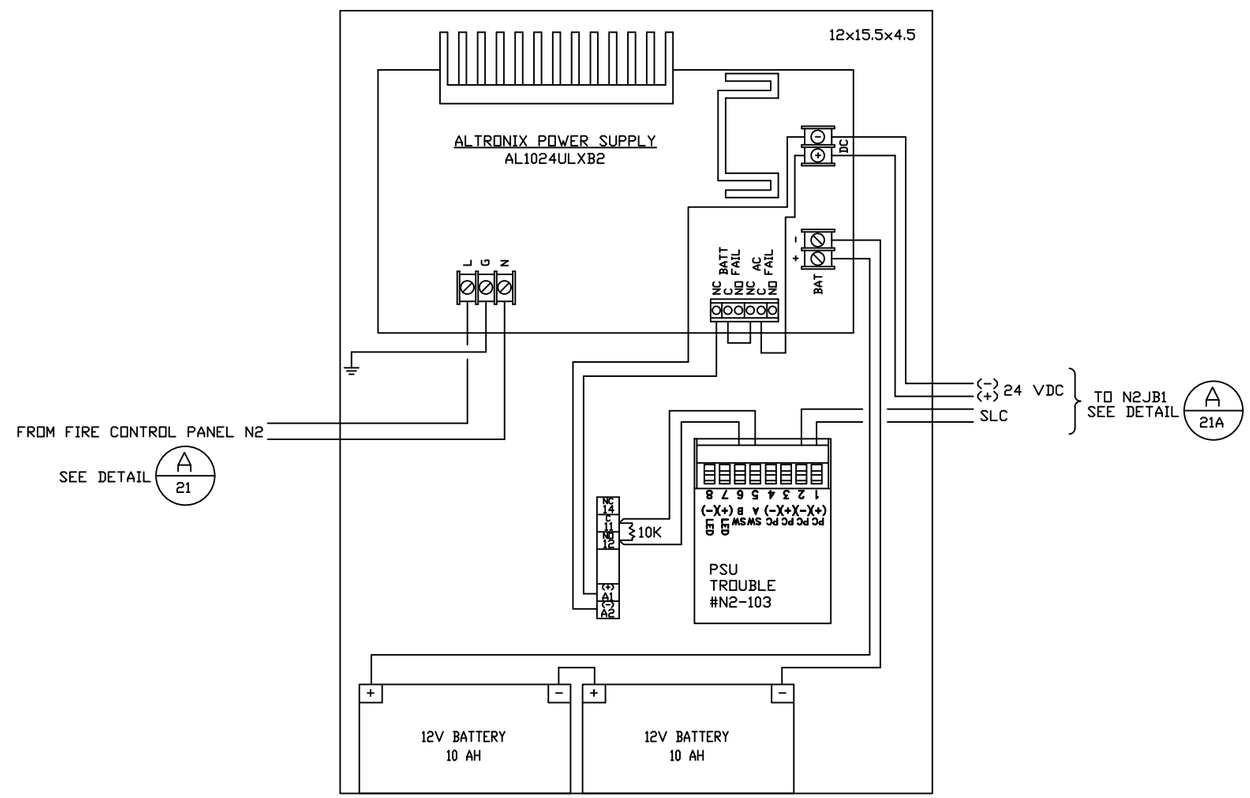

C 21B N2 POWER SUPPLY WIRING DIAGRAM

SCALE: NA

REVISIONS

NO.	DESCRIPTION	BY	DATE
1.	ADD TRANSFORMERS 1-5	LDH	03/08/19

ELECTRIC SCIENTIFIC COMPANY
Engineered Fire Protection Systems
7505 HIGHWAY 7 MINNEAPOLIS, MINNESOTA 55426
TEL. 952-933-4671 FAX 952-933-6541

S:\GARRISONDAM

NICET CERTIFICATION # 103683 FIRE ALARM SYSTEMS LEVEL III

DRAWN BY: L. HINZ

NICET CERTIFICATION # 101427 FIRE ALARM SYSTEMS LEVEL IV

CHECKED BY: J. COZZI

GARRISON DAM
PLANT FIRE ALARM SYSTEM
RIVERDALE, NORTH DAKOTA

N2 POWER SUPPLY WIRING DIAGAM
UNIT 1 TRANSFORMER

JOB NO. 400712

SHEET 21B OF SET

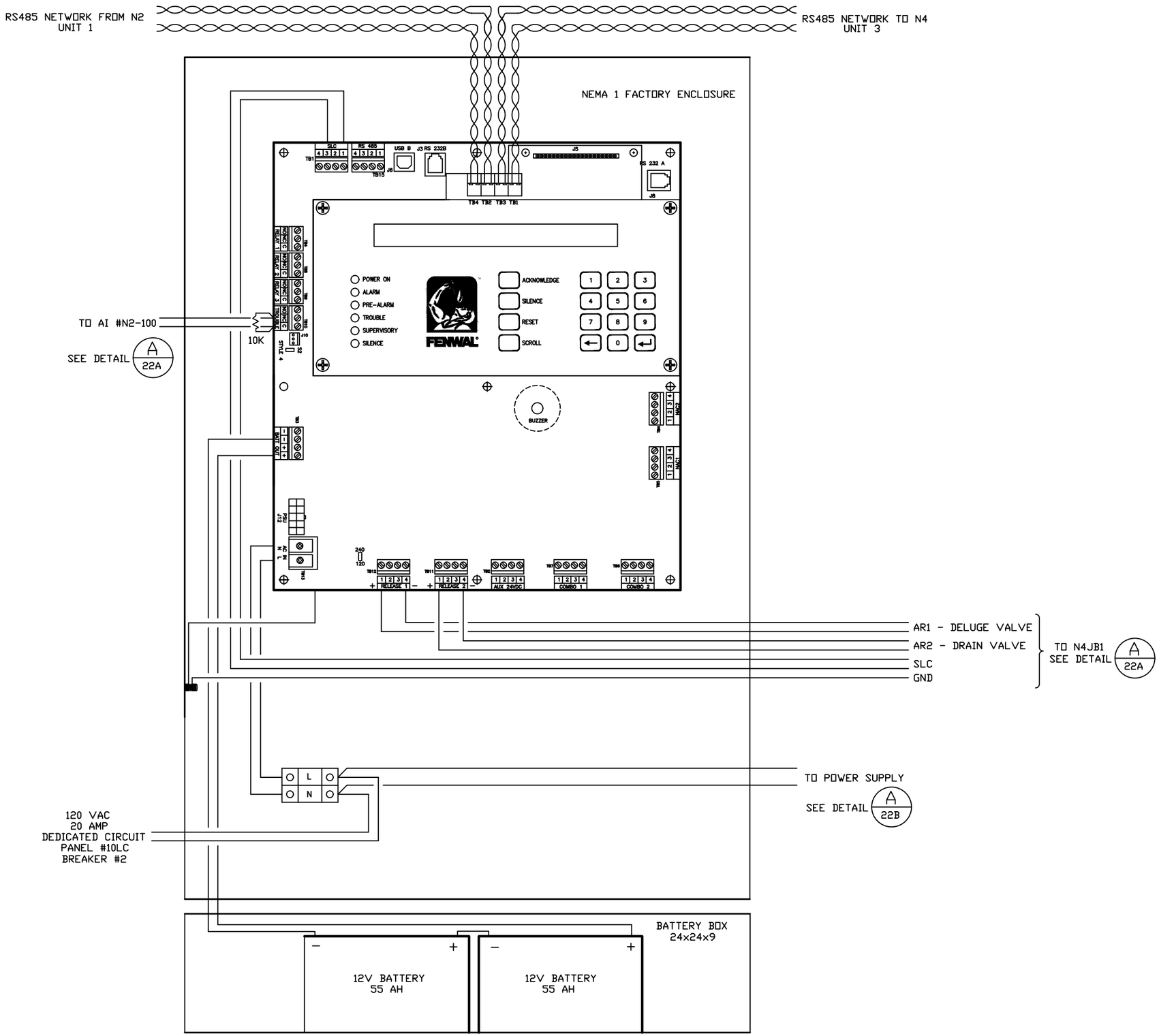

A 22 FIRE CONTROL PANEL N3 WIRING DIAGRAM - UNIT 2 TRANSFORMER

SCALE: NTS

REVISIONS

NO.	DESCRIPTION	BY	DATE
1.	ADD TRANSFORMERS 1-5	LDH	03/08/19

ELECTRIC SCIENTIFIC COMPANY
Engineered Fire Protection Systems
7505 HIGHWAY 7 MINNEAPOLIS, MINNESOTA 55426
TEL. 952-933-4671 FAX 952-933-6541

S:\WORK\DAKOTA\GARRISON\DAM

NICET CERTIFICATION # 103683
FIRE ALARM SYSTEMS LEVEL III

DRAWN BY: L. HINZ

NICET CERTIFICATION # 101427
FIRE ALARM SYSTEMS LEVEL IV

CHECKED BY: J. COZZI

GARRISON DAM
PLANT FIRE ALARM SYSTEM
RIVERDALE, NORTH DAKOTA

FIRE CONTROL PANEL N3 WIRING DIAGRAM
UNIT 2 TRANSFORMER

JOB NO. 400712

SHEET 22 OF SET

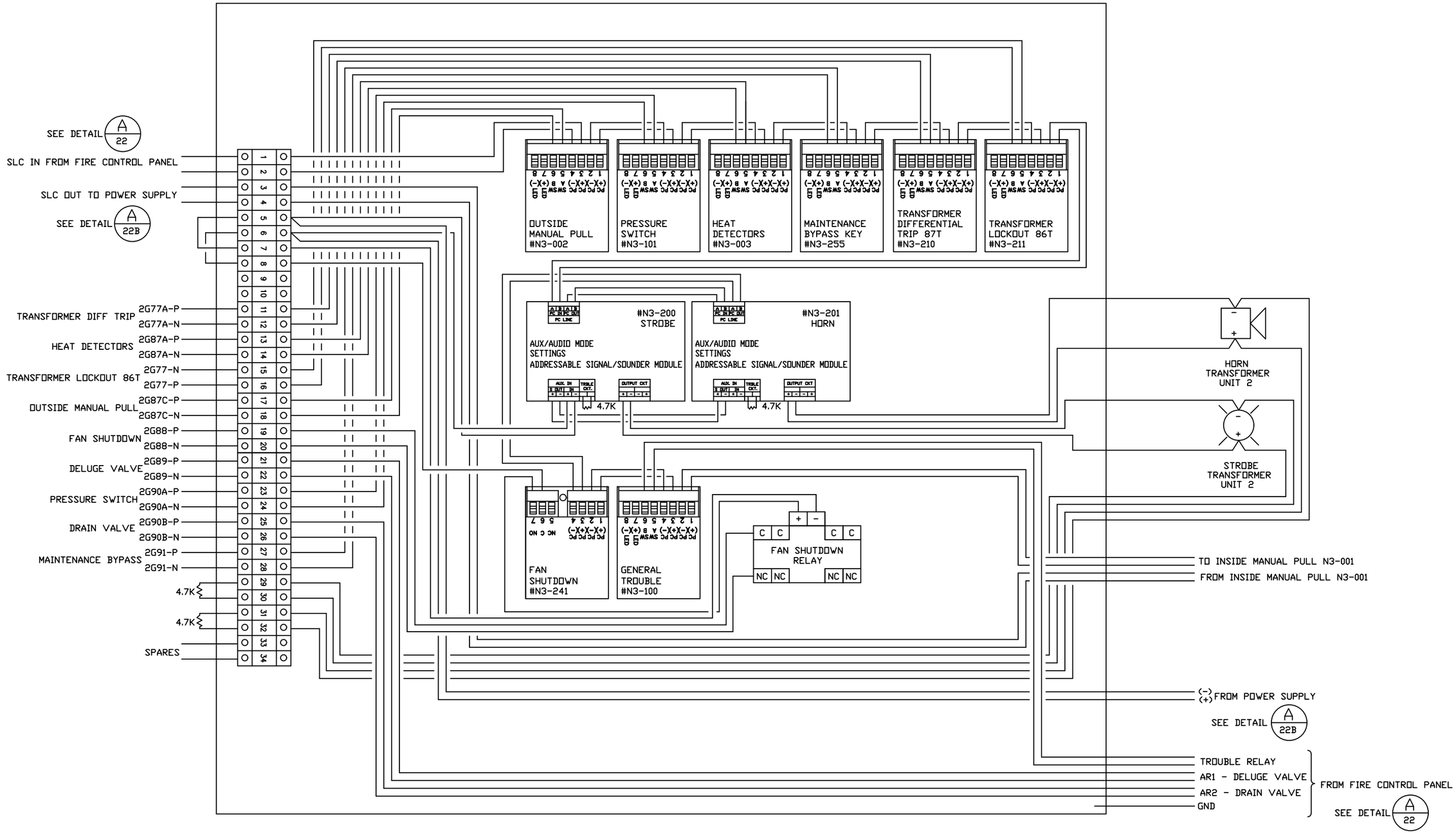

A 22A N3JB1 WIRING DIAGRAM - UNIT 2 TRANSFORMER ELEVATION 1684'-0"

SCALE: NTS

REVISIONS

NO.	DESCRIPTION	BY	DATE
1.	ADD TRANSFORMERS 1-5	LDH	03/08/19

ELECTRIC SCIENTIFIC COMPANY
Engineered Fire Protection Systems
7505 HIGHWAY 7 MINNEAPOLIS, MINNESOTA 55426
TEL. 952-933-4671 FAX 952-933-6541

S:\GARRISONDAM\UNIT4

NICET CERTIFICATION # 103683 FIRE ALARM SYSTEMS LEVEL III
NICET CERTIFICATION # 101427 FIRE ALARM SYSTEMS LEVEL IV

DRAWN BY: L. HINZ
CHECKED BY: J. COZZI

GARRISON DAM
PLANT FIRE ALARM SYSTEM
RIVERDALE, NORTH DAKOTA

N3JB1 WIRING DIAGRAM
UNIT 2 TRANSFORMER

JOB NO. 400712

SHEET 22A OF SET

CALC. BY: L.HINZ

CIRCUIT	SUPV. CURRENT	NO.	TOTAL	ALARM CURRENT	NO.	TOTAL
PANEL:						
FN6000	.20	1	.20	.650	1	.650
FIELD:						
ACID	.000450	8	.0036	.000450	8	.0036
NETWORK CARD	.07	1	.07	.07	1	.07
ASM	.000500	2	.001	.000500	2	.001
AROD	.000400	1	.000400	.000400	1	.000400
SOLENOID				.417	2	.834

SUPERVISORY TOTAL: .275 ALARM TOTAL: 1.559

SUPERVISORY BATTERY CURRENT: .275 X 90 HOURS = 24.75 AMP/HOURS

TOTAL ALARM CURRENT: 1.559 X .083 HOURS = .129397 AMP/HOURS

SUB-TOTAL: 24.879397 AMP/HOURS

1.1 DE-RATING FACTOR = 27.367336 AMP/HOURS

BATTERY SIZE USED: 55 AMP/HOURS

TOTAL REQUIRED: 27.36 AMP/HOURS

A 22B BATTERY CALCULATION - PANEL N3

SCALE: NA

CALC. BY: L.HINZ

CIRCUIT	SUPV. CURRENT	NO.	TOTAL	ALARM CURRENT	NO.	TOTAL
PANEL:						
AL1024ULX	.05	1	.05	.05	1	.05
FIELD: FENWAL						
HORN				.55	1	.55
STROBE				.65	1	.65
RELAY				.065	1	.065

SUPERVISORY TOTAL: .05 ALARM TOTAL: 1.315

SUPERVISORY BATTERY CURRENT: .05 X 90 HOURS = 4.5 AMP/HOURS

TOTAL ALARM CURRENT: 1.315 X .083 HOURS = .109145 AMP/HOURS

SUB-TOTAL: 4.609145 AMP/HOURS

1.1 DE-RATING FACTOR = 5.0700595 AMP/HOURS

BATTERY SIZE USED: 10 AMP/HOURS

TOTAL REQUIRED: 5.07 AMP/HOURS

B 22B BATTERY CALCULATION - POWER SUPPLY

SCALE: NA

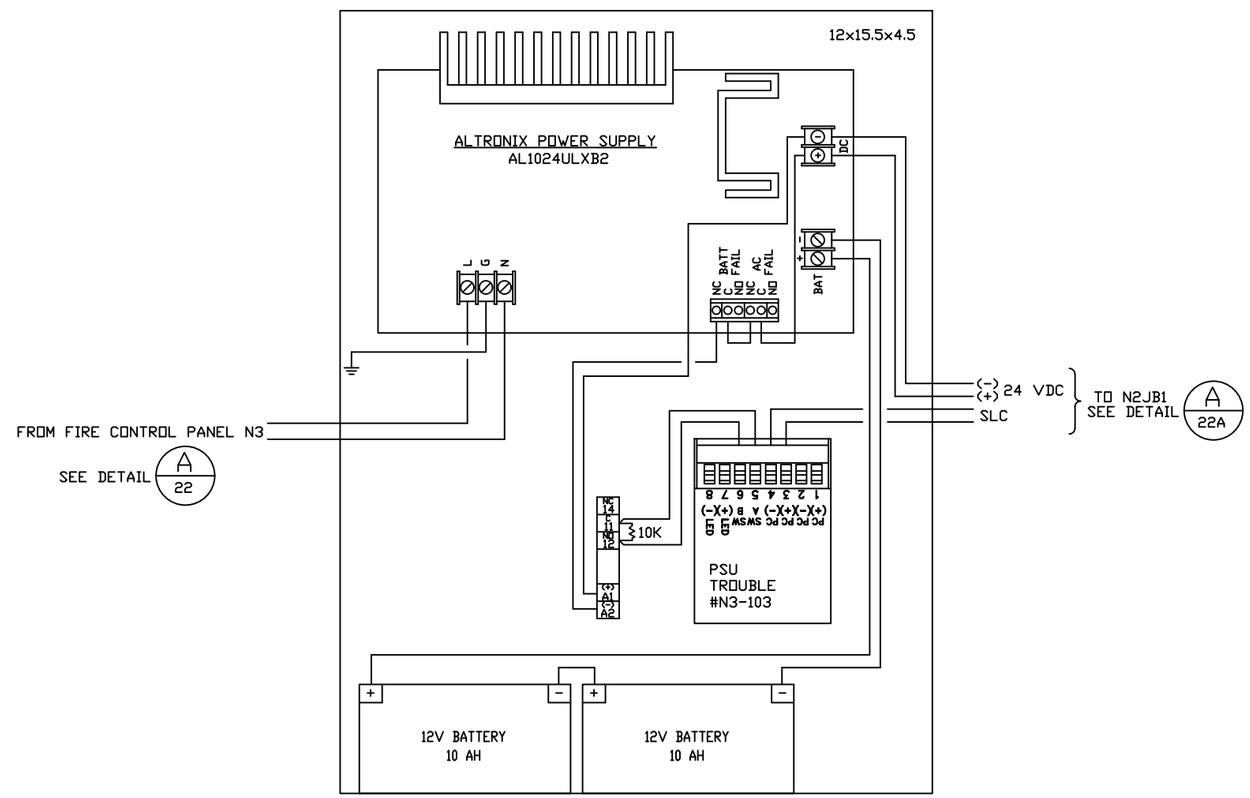

C 22B N3 POWER SUPPLY WIRING DIAGRAM

SCALE: NA

REVISIONS

NO.	DESCRIPTION	BY	DATE
1.	ADD TRANSFORMERS 1-5	LDH	03/08/19

ELECTRIC SCIENTIFIC COMPANY
Engineered Fire Protection Systems
7505 HIGHWAY 7 MINNEAPOLIS, MINNESOTA 55426
TEL. 952-933-4671 FAX 952-933-6541

S:\GARRISONDAM

NICET CERTIFICATION # 103683 FIRE ALARM SYSTEMS LEVEL III

DRAWN BY: L. HINZ

NICET CERTIFICATION # 101427 FIRE ALARM SYSTEMS LEVEL IV

CHECKED BY: J. COZZI

GARRISON DAM
PLANT FIRE ALARM SYSTEM
RIVERDALE, NORTH DAKOTA

N3 POWER SUPPLY WIRING DIAGRAM
UNIT 2 TRANSFORMER

JOB NO. 400712

SHEET 22B OF SET

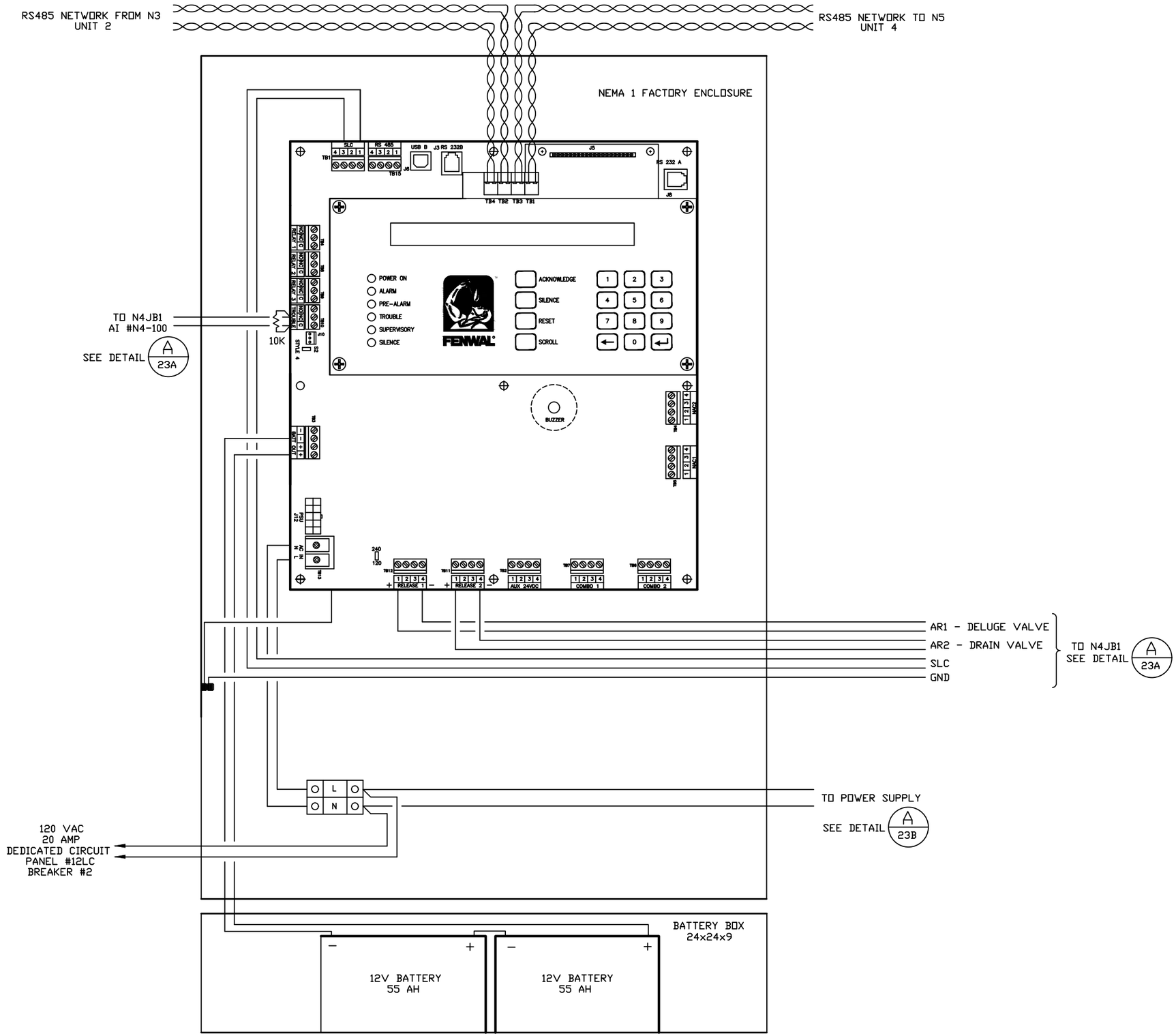

A 23 FIRE CONTROL PANEL N4 WIRING DIAGRAM - UNIT 3 TRANSFORMER

SCALE: NTS

REVISIONS

NO.	DESCRIPTION	BY	DATE
1.	ADD TRANSFORMERS 1-5	LDH	03/08/19

ELECTRIC SCIENTIFIC COMPANY
Engineered Fire Protection Systems
7505 HIGHWAY 7 MINNEAPOLIS, MINNESOTA 55426
TEL. 952-933-4671 FAX 952-933-6541

S:\WORK\DAKOTA\GARRISON\DAM

NICET CERTIFICATION # 103683
FIRE ALARM SYSTEMS LEVEL III

DRAWN BY: L. HINZ
NICET CERTIFICATION # 101427
FIRE ALARM SYSTEMS LEVEL IV

CHECKED BY: J. COZZI

GARRISON DAM
PLANT FIRE ALARM SYSTEM
MISSOURI RIVER, NORTH DAKOTA

FIRE CONTROL PANEL N4 WIRING DIAGRAM
UNIT 3 TRANSFORMER

JOB NO. 400712

SHEET 23 OF SET

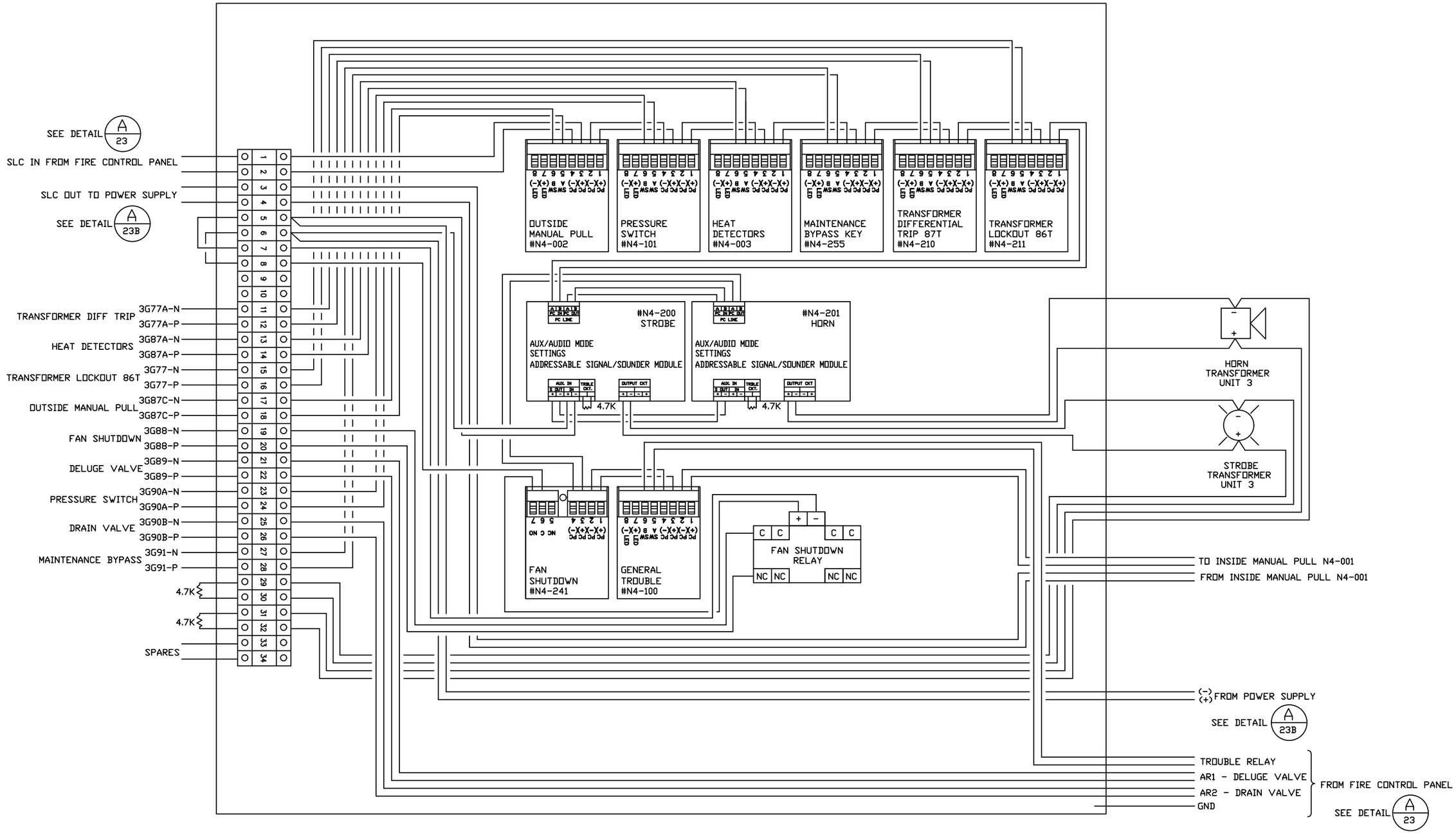

A/23A N4JB1 WIRING DIAGRAM - UNIT 3 TRANSFORMER ELEVATION 1684'-0"

SCALE: NTS

REVISIONS

NO.	DESCRIPTION	BY	DATE
1.	ADD TRANSFORMERS 1-5	LDH	03/08/19
2.		LDH	
3.			

ELECTRIC SCIENTIFIC COMPANY
Engineered Fire Protection Systems
7505 HIGHWAY 7 MINNEAPOLIS, MINNESOTA 55426
TEL. 952-933-4671 FAX 952-933-6541

S:\GARRISONDAM\UNIT4

NICET CERTIFICATION # 103683 FIRE ALARM SYSTEMS LEVEL III
DRAWN BY: L. HINZ
NICET CERTIFICATION # 101427 FIRE ALARM SYSTEMS LEVEL IV
CHECKED BY: J. COZZI

GARRISON DAM
PLANT FIRE ALARM SYSTEM
RIVERDALE, NORTH DAKOTA

N4JB1 WIRING DIAGRAM
UNIT 3 TRANSFORMER

JOB NO. 400712

SHEET 23A OF SET

CALC. BY: L.HINZ

CIRCUIT	SUPV. CURRENT	NO.	TOTAL	ALARM CURRENT	NO.	TOTAL
PANEL:						
FN6000	.20	1	.20	.650	1	.650
FIELD:						
ACID	.000450	8	.0036	.000450	8	.0036
NETWORK CARD	.07	1	.07	.07	1	.07
ASM	.000500	2	.001	.000500	2	.001
AROD	.000400	1	.000400	.000400	1	.000400
SOLENOID				.417	2	.834

SUPERVISORY TOTAL: .275 ALARM TOTAL: 1.559

SUPERVISORY BATTERY CURRENT: .275 X 90 HOURS = 24.75 AMP/HOURS

TOTAL ALARM CURRENT: 1.559 X .083 HOURS = .129397 AMP/HOURS

SUB-TOTAL: 24.879397 AMP/HOURS

1.1 DE-RATING FACTOR = 27.367336 AMP/HOURS

BATTERY SIZE USED: 55 AMP/HOURS

TOTAL REQUIRED: 27.36 AMP/HOURS

A 23B BATTERY CALCULATION - PANEL N4

SCALE: NA

CALC. BY: L.HINZ

CIRCUIT	SUPV. CURRENT	NO.	TOTAL	ALARM CURRENT	NO.	TOTAL
PANEL:						
AL1024ULX	.05	1	.05	.05	1	.05
FIELD: FENWAL						
HORN				.55	1	.55
STROBE				.65	1	.65
RELAY				.065	1	.065

SUPERVISORY TOTAL: .05 ALARM TOTAL: 1.315

SUPERVISORY BATTERY CURRENT: .05 X 90 HOURS = 4.5 AMP/HOURS

TOTAL ALARM CURRENT: 1.315 X .083 HOURS = .109145 AMP/HOURS

SUB-TOTAL: 4.609145 AMP/HOURS

1.1 DE-RATING FACTOR = 5.0700595 AMP/HOURS

BATTERY SIZE USED: 10 AMP/HOURS

TOTAL REQUIRED: 5.07 AMP/HOURS

B 23B BATTERY CALCULATION - POWER SUPPLY

SCALE: NA

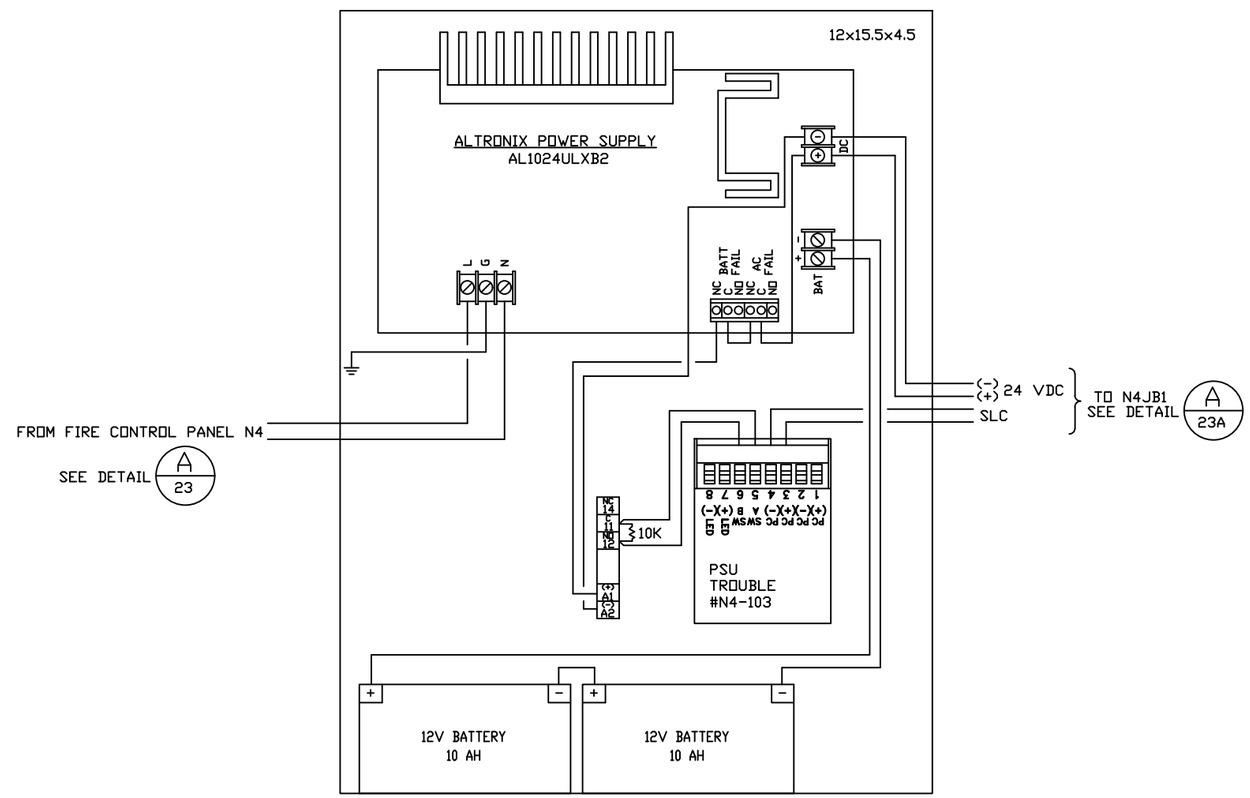

C 23B N4 POWER SUPPLY WIRING DIAGRAM

SCALE: NA

REVISIONS

NO.	DESCRIPTION	BY	DATE
1.	ADD TRANSFORMERS 1-5	LDH	03/08/19

ELECTRIC SCIENTIFIC COMPANY
Engineered Fire Protection Systems
7505 HIGHWAY 7 MINNEAPOLIS, MINNESOTA 55426
TEL. 952-933-4671 FAX 952-933-6541

S:\GARRISONDAM

NICET CERTIFICATION # 103683 FIRE ALARM SYSTEMS LEVEL III

DRAWN BY: L. HINZ

NICET CERTIFICATION # 101427 FIRE ALARM SYSTEMS LEVEL IV

CHECKED BY: J. COZZI

GARRISON DAM
PLANT FIRE ALARM SYSTEM
RIVERDALE, NORTH DAKOTA

N4 POWER SUPPLY WIRING DIAGRAM
UNIT 3 TRANSFORMER

JOB NO. 400712

SHEET 23B OF SET

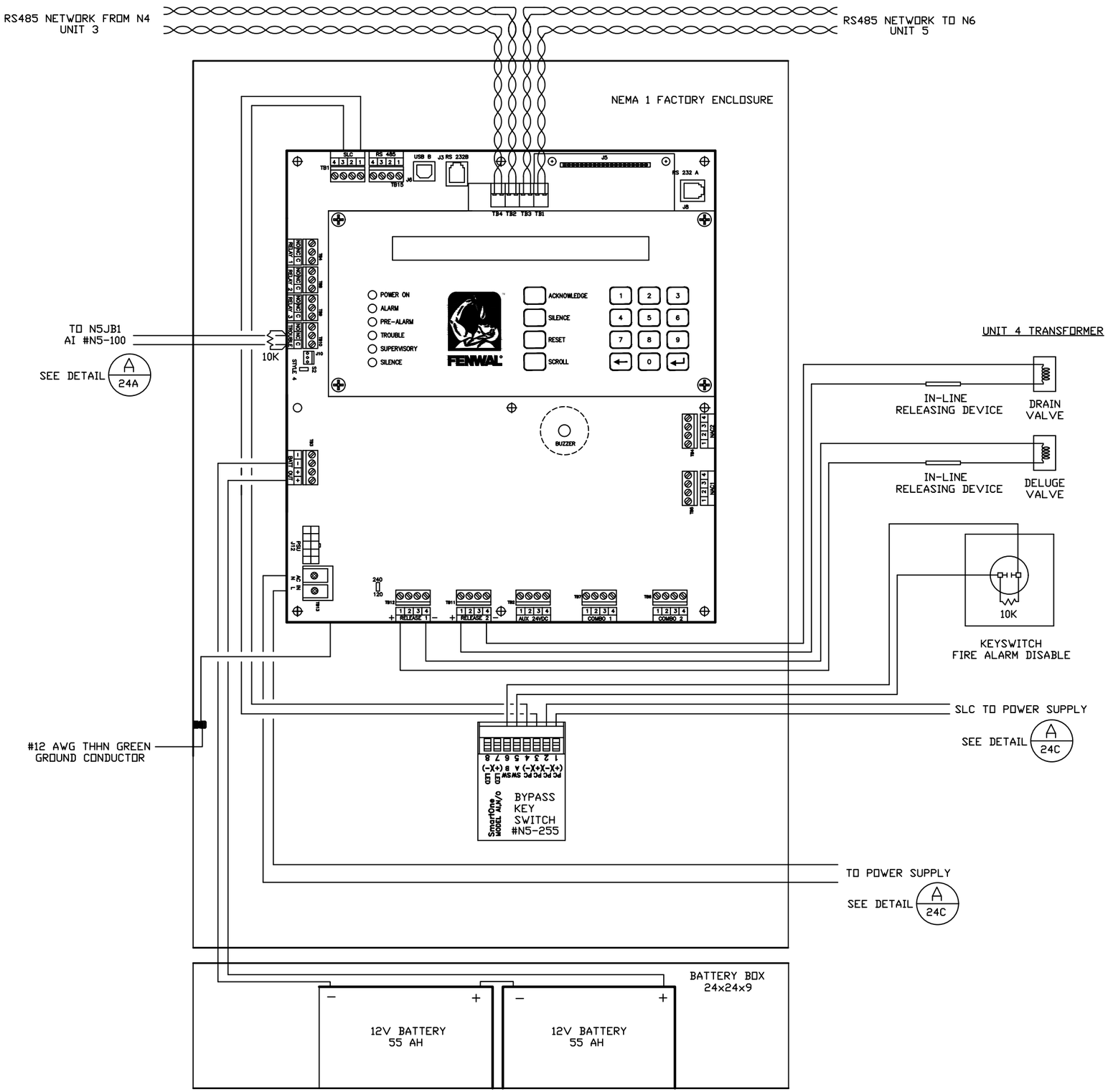

A 24 FIRE CONTROL PANEL N5 WIRING DIAGRAM - UNIT 4 TRANSFORMER

SCALE: NTS

REVISIONS

NO.	DESCRIPTION	BY	DATE
1.	ADD TRANSFORMERS 1-5	LDH	03/08/19

ELECTRIC SCIENTIFIC COMPANY
Engineered Fire Protection Systems
7505 HIGHWAY 7 MINNEAPOLIS, MINNESOTA 55426
TEL. 952-933-4671 FAX 952-933-6541

S:\WORTHDAKOTA\GARRISON\DWG

NICET CERTIFICATION # 103683
FIRE ALARM SYSTEMS LEVEL III

DRAWN BY: L. HINZ

NICET CERTIFICATION # 101427
FIRE ALARM SYSTEMS LEVEL IV

CHECKED BY: J. COZZI

GARRISON DAM
PLANT FIRE ALARM SYSTEM
RIVERDALE, NORTH DAKOTA

FIRE CONTROL PANEL N5 WIRING DIAGRAM
UNIT 4 TRANSFORMER

JOB NO. 400712

SHEET 24 OF SET

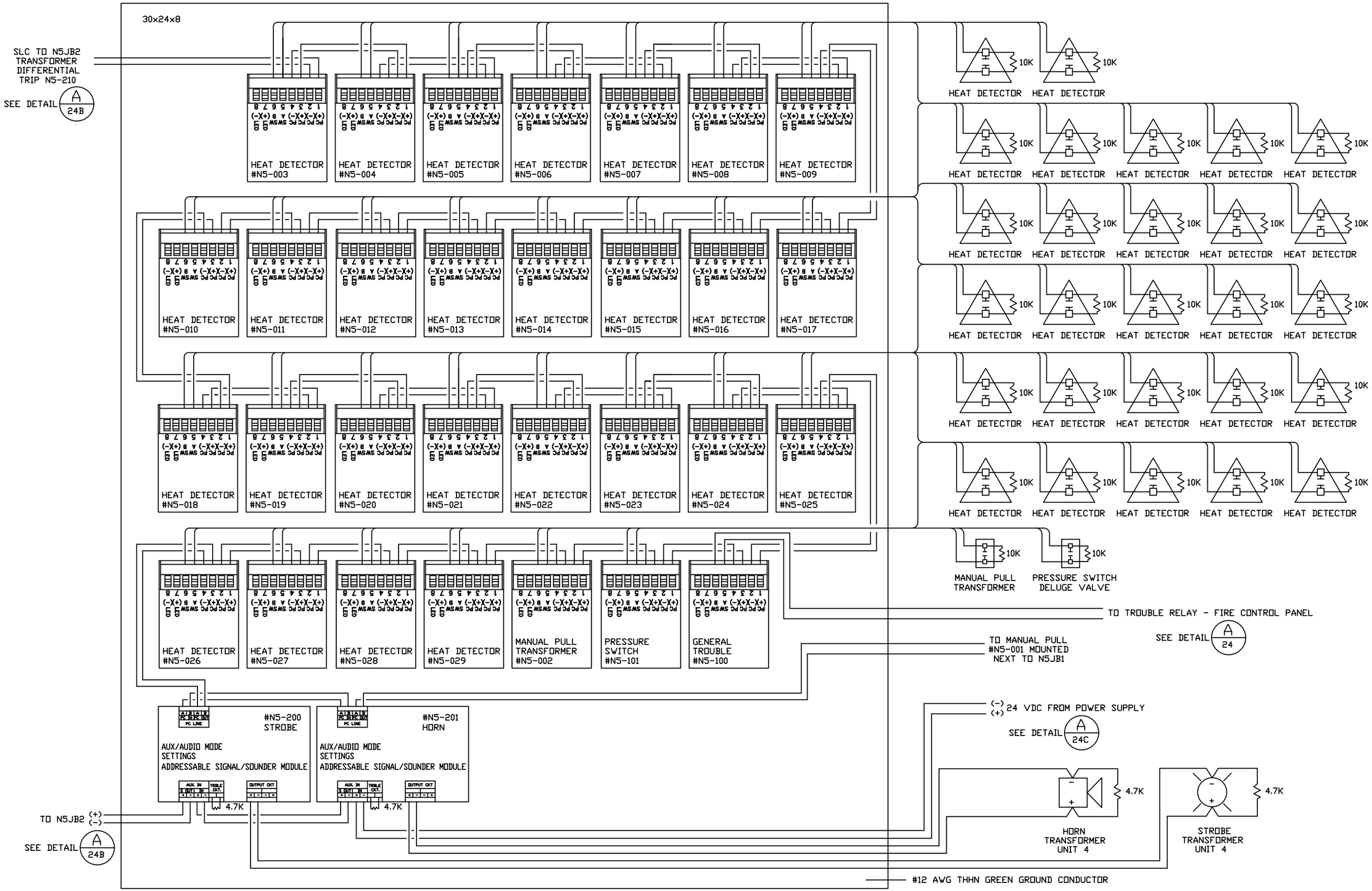

A 24A N5JB1 WIRING DIAGRAM - UNIT 4 TRANSFORMER ELEVATION 1684'-0"

SCALE: NTS

REVISIONS

NO.	DESCRIPTION	BY	DATE
1.	ADD TRANSFORMERS 1-5	LDH	03/08/19

ELECTRIC SCIENTIFIC COMPANY
Engineered Fire Protection Systems
7505 HIGHWAY 7 MINNEAPOLIS, MINNESOTA 55426
TEL. 952-933-4671 FAX 952-933-6541

S:\GARRISON\DAM\UNIT4

NICET CERTIFICATION # 103683 FIRE ALARM SYSTEMS LEVEL III

DRAWN BY: L. HINZ

NICET CERTIFICATION # 101427 FIRE ALARM SYSTEMS LEVEL IV

CHECKED BY: J. COZZI

GARRISON DAM
PLANT FIRE ALARM SYSTEM
RIVERDALE, NORTH DAKOTA

N5JB1 WIRING DIAGRAM
UNIT 4 TRANSFORMER - ELEVATION 1684'-0"

JOB NO. 400712

SHEET 24A OF SET

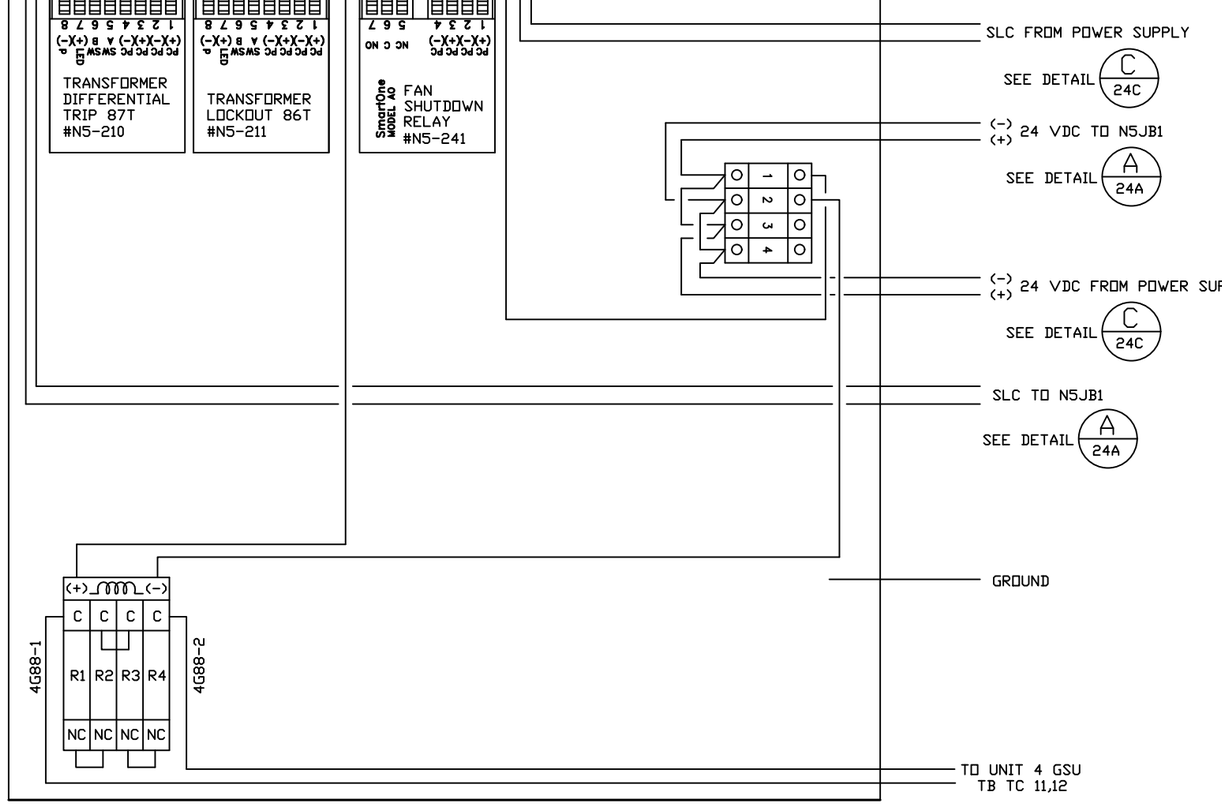

A 24B N5JB2 WIRING DIAGRAM - ELEVATION 1684'0"

SCALE: NTS

REVISIONS

NO.	DESCRIPTION	BY	DATE
1.	ADD TRANSFORMERS 1-5	LDH	03/08/19

ELECTRIC SCIENTIFIC COMPANY
Engineered Fire Protection Systems
7505 HIGHWAY 7 MINNEAPOLIS, MINNESOTA 55426
TEL. 952-933-4671 FAX 952-933-6541

S:\GARRISONDAM\UNIT4

NICET CERTIFICATION # 103683 FIRE ALARM SYSTEMS LEVEL III
DRAWN BY: L. HINZ
NICET CERTIFICATION # 101427 FIRE ALARM SYSTEMS LEVEL IV
CHECKED BY: J. COZZI

GARRISON DAM
PLANT FIRE ALARM SYSTEM
RIVERDALE, NORTH DAKOTA

N5JB2 WIRING DIAGRAM
UNIT 4 TRANSFORMER - ELEVATION 1684'-0"

JOB NO. 400712

SHEET 24B OF SET

CALC. BY: L.HINZ

CIRCUIT	SUPV. CURRENT	NO.	TOTAL	ALARM CURRENT	NO.	TOTAL
PANEL:						
FN6000 N5	.20	1	.20	.650	1	.650
FIELD: FENWAL						
ACID	.000450	34	.0153	.000450	34	.0153
NETWORK CARD	.07	1	.07	.07	1	.07
ASM	.000500	2	.001	.000500	2	.001
AROD	.000400	1	.000400	.000400	1	.000400
SOLENOID				.417	2	.834

SUPERVISORY TOTAL: .2867 ALARM TOTAL: 1.5707

SUPERVISORY BATTERY CURRENT: .2867 X 90 HOURS = 25.803 AMP/HOURS

TOTAL ALARM CURRENT: 1.5707 X .167 HOURS = .2623069 AMP/HOURS

SUB-TOTAL: 29.065306 AMP/HOURS

1.1 DE-RATING FACTOR = 31.971836 AMP/HOURS

BATTERY SIZE USED: 55 AMP/HOURS

TOTAL REQUIRED: 31.97 AMP/HOURS

A 24C BATTERY CALCULATION - FN6000 PANEL N5

SCALE: NA

CALC. BY: L.HINZ

CIRCUIT	SUPV. CURRENT	NO.	TOTAL	ALARM CURRENT	NO.	TOTAL
PANEL: POWER SUPPLY #1						
AL1024ULX	.05	1	.05	.05	1	.05
FIELD: FENWAL						
HORN				.55	1	.55
STROBE				.65	1	.65
RELAY				.50	5	2.5

SUPERVISORY TOTAL: .05 ALARM TOTAL: 3.75

SUPERVISORY BATTERY CURRENT: .05 X 90 HOURS = 4.5 AMP/HOURS

TOTAL ALARM CURRENT: 3.75 X .083 HOURS = .31125 AMP/HOURS

SUB-TOTAL: 4.81125 AMP/HOURS

1.1 DE-RATING FACTOR = 5.292375 AMP/HOURS

BATTERY SIZE USED: 10 AMP/HOURS

TOTAL REQUIRED: 5.29 AMP/HOURS

B 24C BATTERY CALCULATION - POWER SUPPLY

SCALE: NA

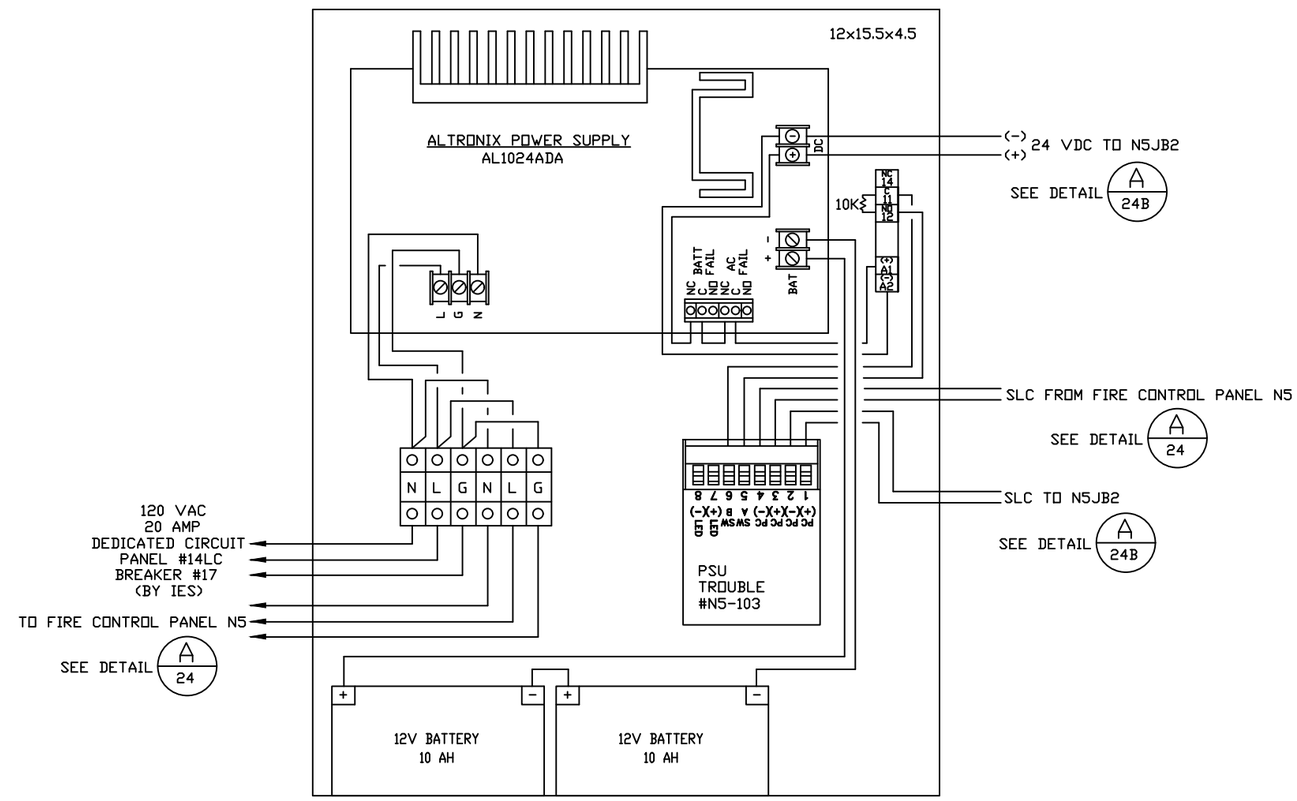

C 24C N5 POWER SUPPLY WIRING DIAGRAM

SCALE: NA

REVISIONS

NO.	DESCRIPTION	BY	DATE
1.	ADD TRANSFORMERS 1-5	LDH	03/08/19

ELECTRIC SCIENTIFIC COMPANY
Engineered Fire Protection Systems
7505 HIGHWAY 7 MINNEAPOLIS, MINNESOTA 55426
TEL. 952-933-4671 FAX 952-933-6541

S:\GARRISON\DAM\UNIT4

NICET CERTIFICATION # 103683 FIRE ALARM SYSTEMS LEVEL III

DRAWN BY: L. HINZ

NICET CERTIFICATION # 101427 FIRE ALARM SYSTEMS LEVEL IV

CHECKED BY: J. COZZI

GARRISON DAM
PLANT FIRE ALARM SYSTEM
RIVERDALE, NORTH DAKOTA

N5 POWER SUPPLY WIRING DIAGRAM
UNIT 4 TRANSFORMER

JOB NO. 400712

SHEET 24C OF SET

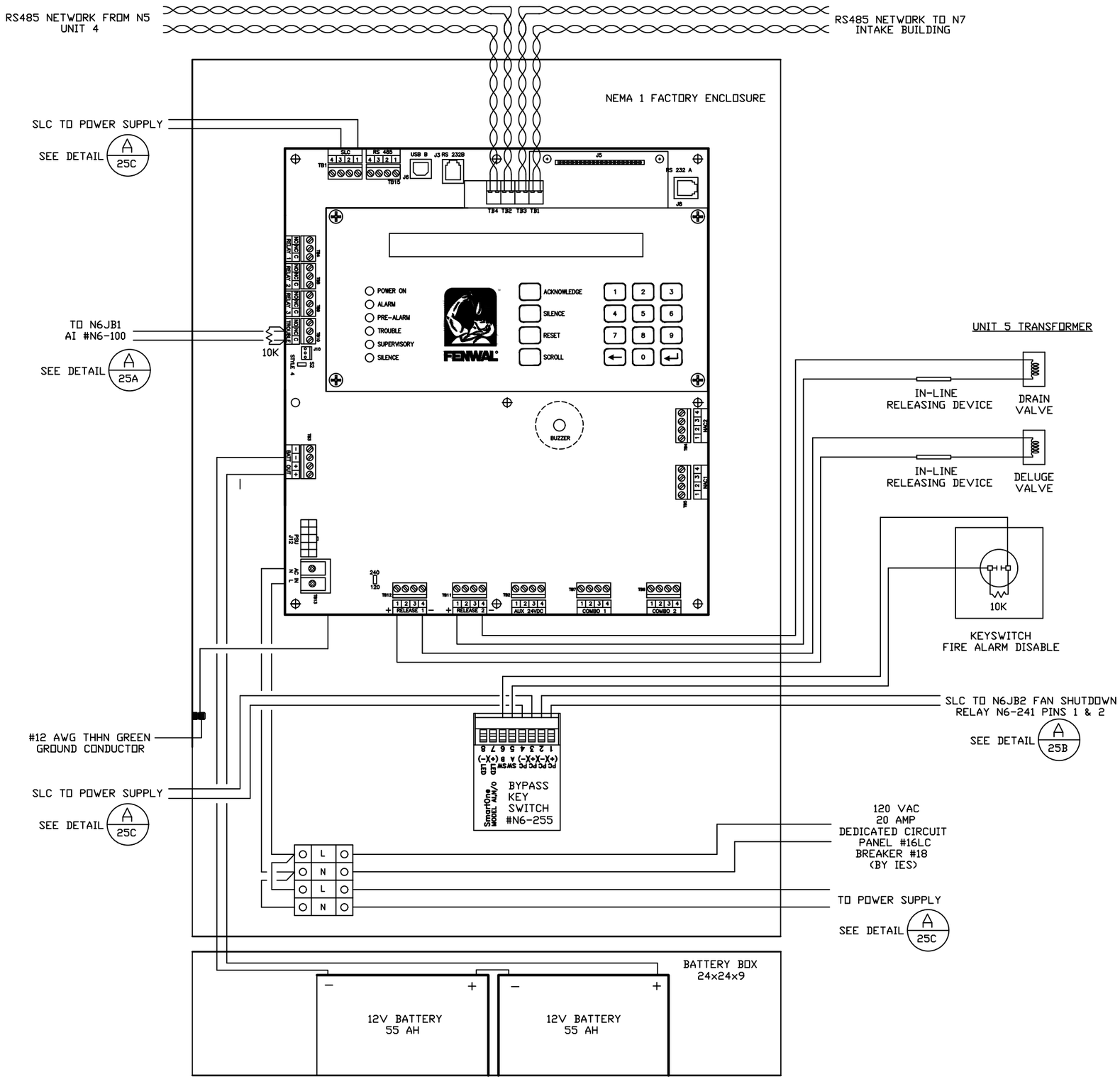

A 25 FIRE CONTROL PANEL N6 WIRING DIAGRAM - UNIT 5 TRANSFORMER

SCALE: NTS

REVISIONS

NO.	DESCRIPTION	BY	DATE
1.	ADD TRANSFORMERS 1-5	LDH	03/08/19

ELECTRIC SCIENTIFIC COMPANY
Engineered Fire Protection Systems
7505 HIGHWAY 7 MINNEAPOLIS, MINNESOTA 55426
TEL. 952-933-4671 FAX 952-933-6541

S:\CORTBLAKOTA\GARRISON\DWG

NICET CERTIFICATION # 103683
FIRE ALARM SYSTEMS LEVEL III

DRAWN BY: L. HINZ

NICET CERTIFICATION # 101427
FIRE ALARM SYSTEMS LEVEL IV

CHECKED BY: J. COZZI

GARRISON DAM
PLANT FIRE ALARM SYSTEM
RIVERDALE, NORTH DAKOTA

FIRE CONTROL PANEL N6 WIRING DIAGRAM
UNIT 5 TRANSFORMER

JOB NO. 400712

SHEET 25 OF SET

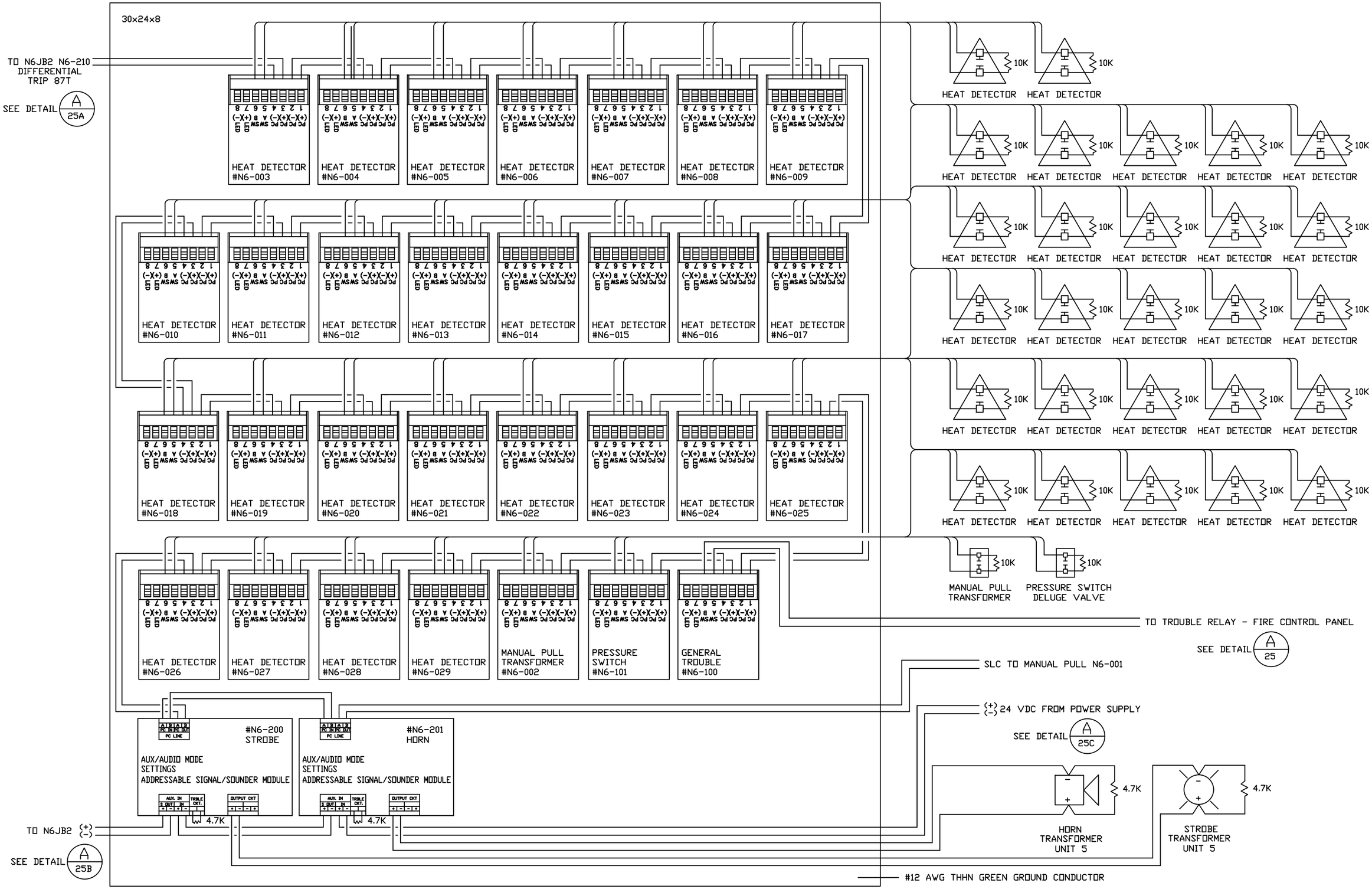

A 25A N6JB1 WIRING DIAGRAM - UNIT 5 TRANSFORMER ELEVATION 1684'-0"

SCALE: NTS

REVISIONS

NO.	DESCRIPTION	BY	DATE
1.	ADD TRANSFORMERS 1-5	LDH	03/08/19

ELECTRIC SCIENTIFIC COMPANY
Engineered Fire Protection Systems
7505 HIGHWAY 7 MINNEAPOLIS, MINNESOTA 55426
TEL. 952-933-4671 FAX 952-933-6541

S:\CAD\RESCNCAD

NICET CERTIFICATION # 103683 FIRE ALARM SYSTEMS LEVEL III

DRAWN BY: L. HINZ

NICET CERTIFICATION # 101427 FIRE ALARM SYSTEMS LEVEL IV

CHECKED BY: J. COZZI

GARRISON DAM
PLANT FIRE ALARM SYSTEM
RIVERDALE, NORTH DAKOTA

N6JB1 WIRING DIAGRAM
UNIT 5 TRANSFORMER

JOB NO. 400712

SHEET 25A OF SET

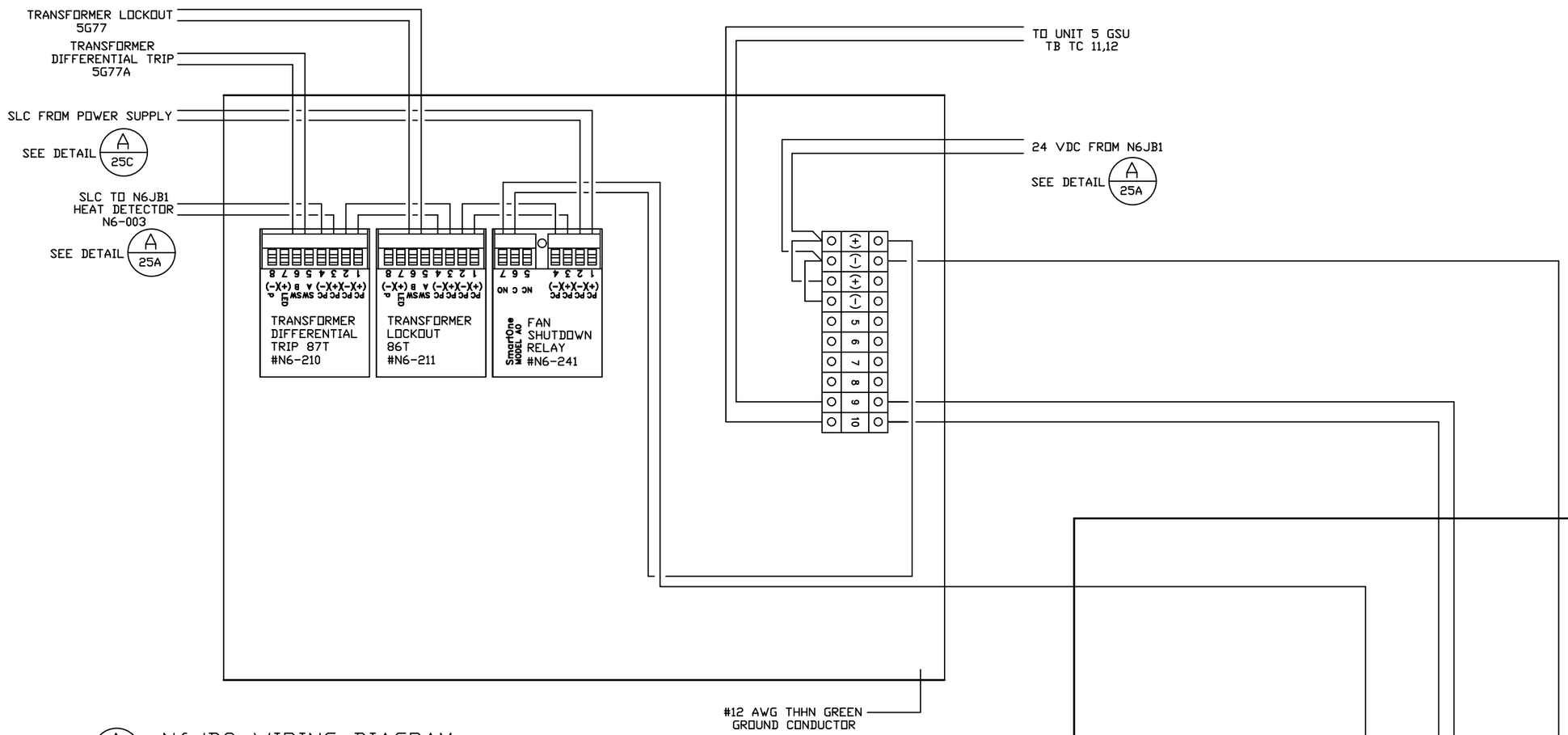

A 25B N6JB2 WIRING DIAGRAM

SCALE: NTS

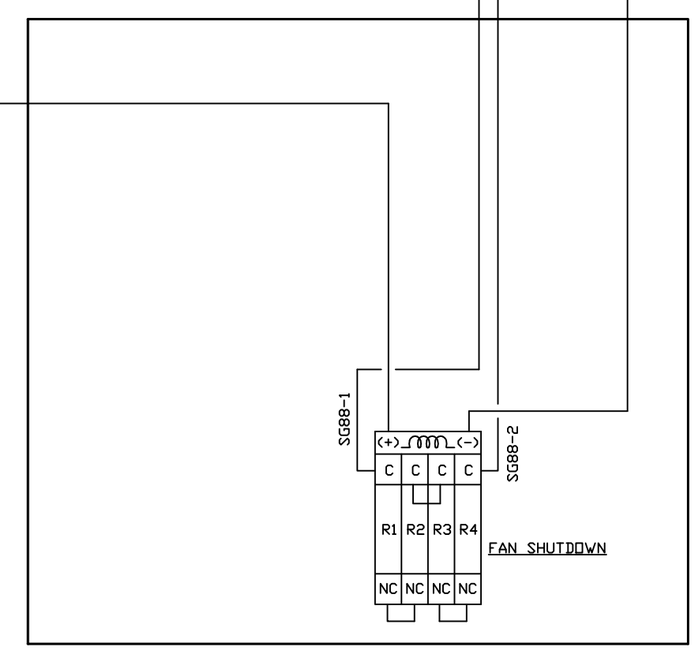

B 25B N6JB3 WIRING DIAGRAM

SCALE: NTS

REVISIONS

NO.	DESCRIPTION	BY	DATE
1.	ADD TRANSFORMERS 1-5	LDH	03/08/19

ELECTRIC SCIENTIFIC COMPANY
Engineered Fire Protection Systems
7505 HIGHWAY 7 MINNEAPOLIS, MINNESOTA 55426
TEL. 952-933-4671 FAX 952-933-6541

NICET CERTIFICATION # 103683
FIRE ALARM SYSTEMS LEVEL III

DRAWN BY: L. HINZ

NICET CERTIFICATION # 101427
FIRE ALARM SYSTEMS LEVEL IV

CHECKED BY: J. COZZI

GARRISON DAM
PLANT FIRE ALARM SYSTEM
RIVERDALE, NORTH DAKOTA

N6JB2 & N6JB3 WIRING DIAGRAM
UNIT 5 TRANSFORMER

JOB NO. 400712

SHEET 25B OF SET

CALC. BY: L.HINZ

CIRCUIT	SUPV. CURRENT	NO.	TOTAL	ALARM CURRENT	NO.	TOTAL
PANEL:						
FN6000 N6	.20	1	.20	.650	1	.650
FIELD: FENWAL						
ACID	.000450	34	.0153	.000450	34	.0153
NETWORK CARD	.07	1	.07	.07	1	.07
ASM	.000500	2	.001	.000500	2	.001
AROD	.000400	1	.000400	.000400	1	.000400
SOLENOID				.417	2	.834

SUPERVISORY TOTAL: .2867 ALARM TOTAL: 1.5707

SUPERVISORY BATTERY CURRENT: .2867 X 90 HOURS = 25.803 AMP/HOURS

TOTAL ALARM CURRENT: 1.5707 X .167 HOURS = .2623069 AMP/HOURS

SUB-TOTAL: 29.065306 AMP/HOURS

1.1 DE-RATING FACTOR = 31.971836 AMP/HOURS

BATTERY SIZE USED: 55 AMP/HOURS

TOTAL REQUIRED: 31.97 AMP/HOURS

A 25C BATTERY CALCULATION - FN6000 PANEL N6

SCALE: NA

CALC. BY: L.HINZ

CIRCUIT	SUPV. CURRENT	NO.	TOTAL	ALARM CURRENT	NO.	TOTAL
PANEL: POWER SUPPLY #1						
AL1024ULX	.05	1	.05	.05	1	.05
FIELD: FENWAL						
HORN				.55	1	.55
STROBE				.65	1	.65
RELAY				.50	5	2.5

SUPERVISORY TOTAL: .05 ALARM TOTAL: 3.75

SUPERVISORY BATTERY CURRENT: .05 X 90 HOURS = 4.5 AMP/HOURS

TOTAL ALARM CURRENT: 3.75 X .083 HOURS = .31125 AMP/HOURS

SUB-TOTAL: 4.81125 AMP/HOURS

1.1 DE-RATING FACTOR = 5.292375 AMP/HOURS

BATTERY SIZE USED: 10 AMP/HOURS

TOTAL REQUIRED: 5.29 AMP/HOURS

B 25C BATTERY CALCULATION - POWER SUPPLY

SCALE: NA

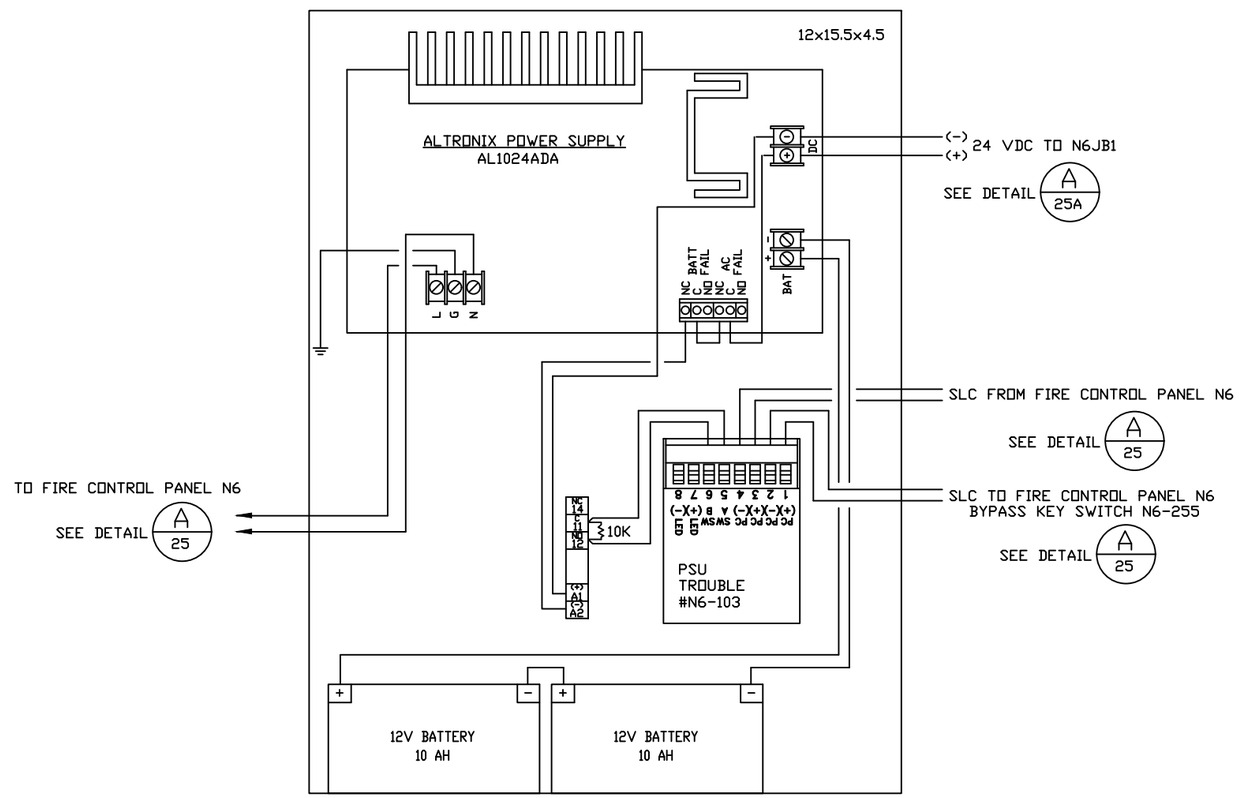

C 25C N6 POWER SUPPLY WIRING DIAGRAM

SCALE: NA

REVISIONS

NO.	DESCRIPTION	BY	DATE
1.	ADD TRANSFORMERS 1-5	LDH	03/08/19

ELECTRIC SCIENTIFIC COMPANY
Engineered Fire Protection Systems
7505 HIGHWAY 7 MINNEAPOLIS, MINNESOTA 55426
TEL. 952-933-4671 FAX 952-933-6541

S:\GARRSONDAM

NICET CERTIFICATION # 103683 FIRE ALARM SYSTEMS LEVEL III

DRAWN BY: L. HINZ

NICET CERTIFICATION # 101427 FIRE ALARM SYSTEMS LEVEL IV

CHECKED BY: J. COZZI

GARRISON DAM
PLANT FIRE ALARM SYSTEM
RIVERDALE, NORTH DAKOTA

N6 POWER SUPPLY WIRING DIAGRAM
UNIT 5 TRANSFORMER

JOB NO. 400712

SHEET 25C OF SET

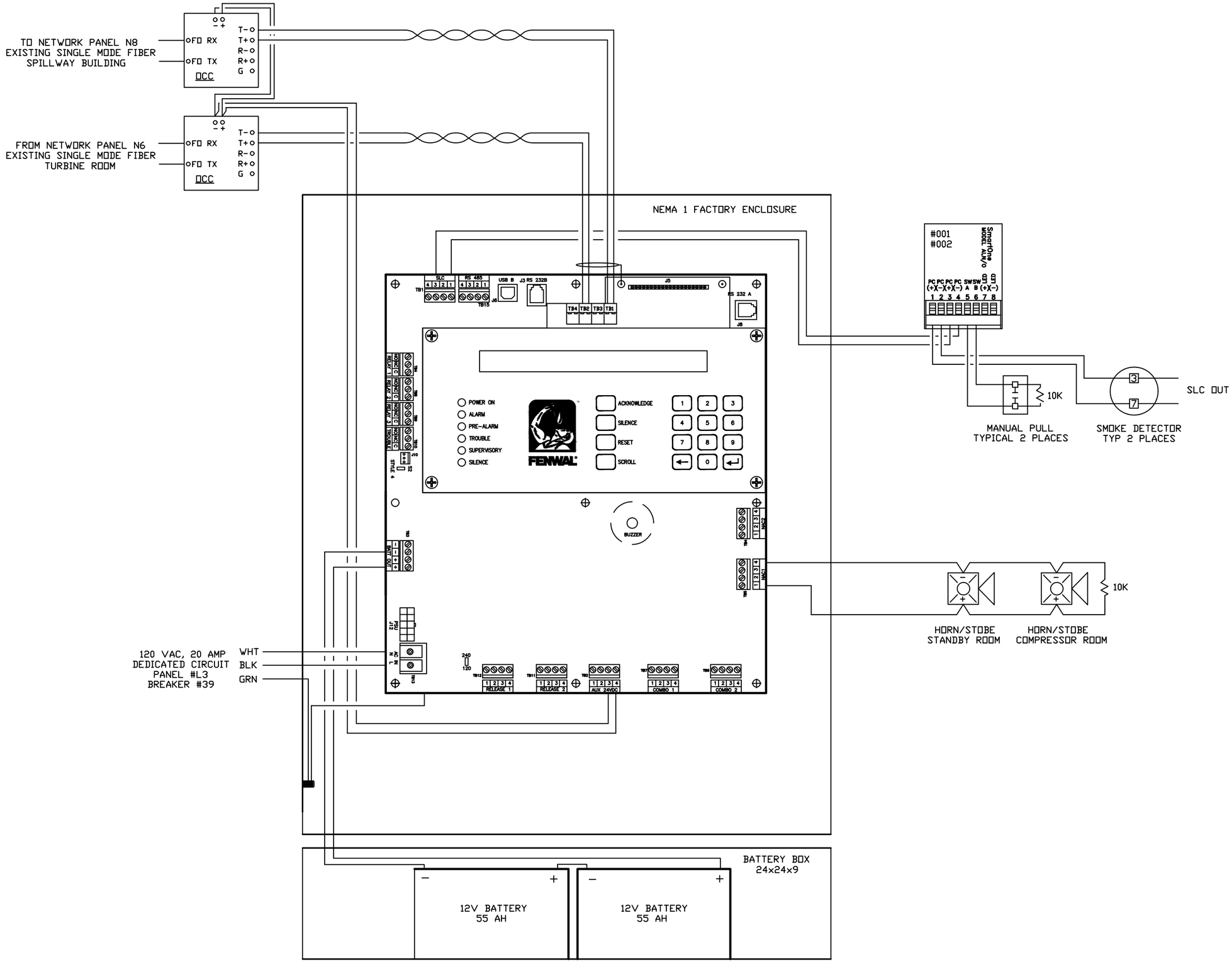

A
26

FIRE CONTROL PANEL N7 WIRING DIAGRAM - INTAKE BUILDING

SCALE: NTS

REVISIONS

NO.	DESCRIPTION	BY	DATE
1.	RELEASE FOR APPROVAL & REVIEW	LDH	10/29/10
2.	ASBUILT	LDH	05/26/11
3.	ADD TRANSFORMER 1-5	LDH	03/08/19

ELECTRIC SCIENTIFIC COMPANY
Engineered Fire Protection Systems
7505 HIGHWAY 7 MINNEAPOLIS, MINNESOTA 55426
TEL. 952-933-4671 FAX 952-933-6541

S:\GARRISON\DAM\FIREALARM

NICET CERTIFICATION # 103683
FIRE ALARM SYSTEMS LEVEL III

DRAWN BY: L. HINZ
NICET CERTIFICATION # 101427
FIRE ALARM SYSTEMS LEVEL IV

CHECKED BY: J. COZZI

GARRISON DAM
PLANT FIRE ALARM SYSTEM
RIVERDALE, NORTH DAKOTA

FIRE ALARM PANEL N7 WIRING DIAGRAM
INTAKE BUILDING

JOB NO. 400712

SHEET 26 OF SET

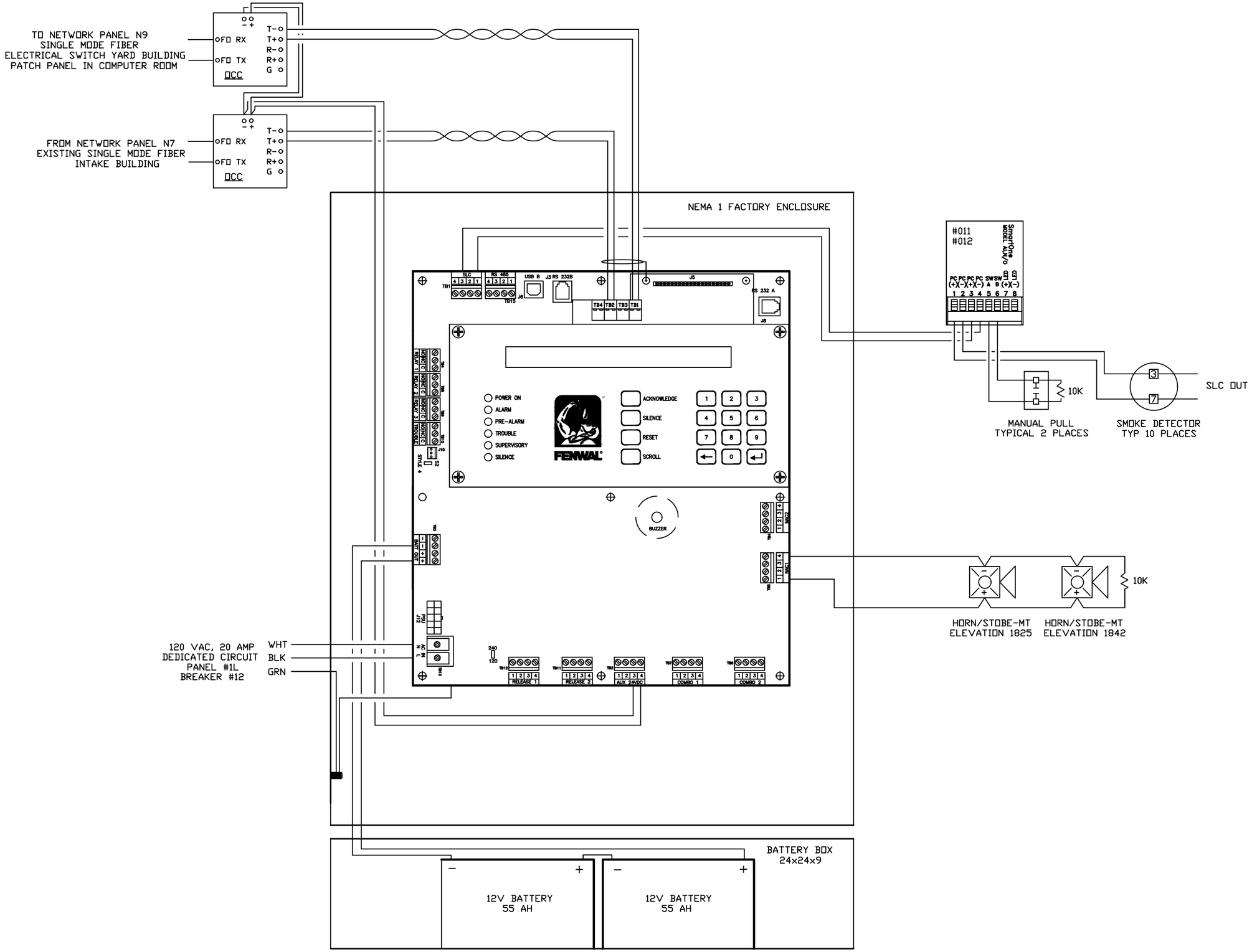

A
27

FIRE CONTROL PANEL N8 WIRING DIAGRAM - SPILLWAY MCC BUILDING

SCALE: NTS

REVISIONS

NO.	DESCRIPTION	BY	DATE
1.	RELEASE FOR APPROVAL & REVIEW	LDH	10/29/10
2.	ASBUILT	LDH	05/26/11
3.	ADD PANEL N9	LDH	04/25/14
4.	ADD TRANSFORMER 1-5	LDH	03/08/19

ELECTRIC SCIENTIFIC COMPANY
Engineered Fire Protection Systems
7505 HIGHWAY 7 MINNEAPOLIS, MINNESOTA 55426
TEL. 952-933-4671 FAX 952-933-6541

S:\GARRISON\NAY V7\FCA.ARM

NICET CERTIFICATION # 103683
FIRE ALARM SYSTEMS LEVEL III

DRAWN BY: L. HINZ
NICET CERTIFICATION # 101427
FIRE ALARM SYSTEMS LEVEL IV

CHECKED BY: J. COZZI

GARRISON DAM
PLANT FIRE ALARM SYSTEM
RIVERDALE, NORTH DAKOTA

FIRE ALARM PANEL N8 WIRING DIAGRAM
SPILLWAY MCC ROOM

JOB NO. 400712

SHEET 27 OF SET

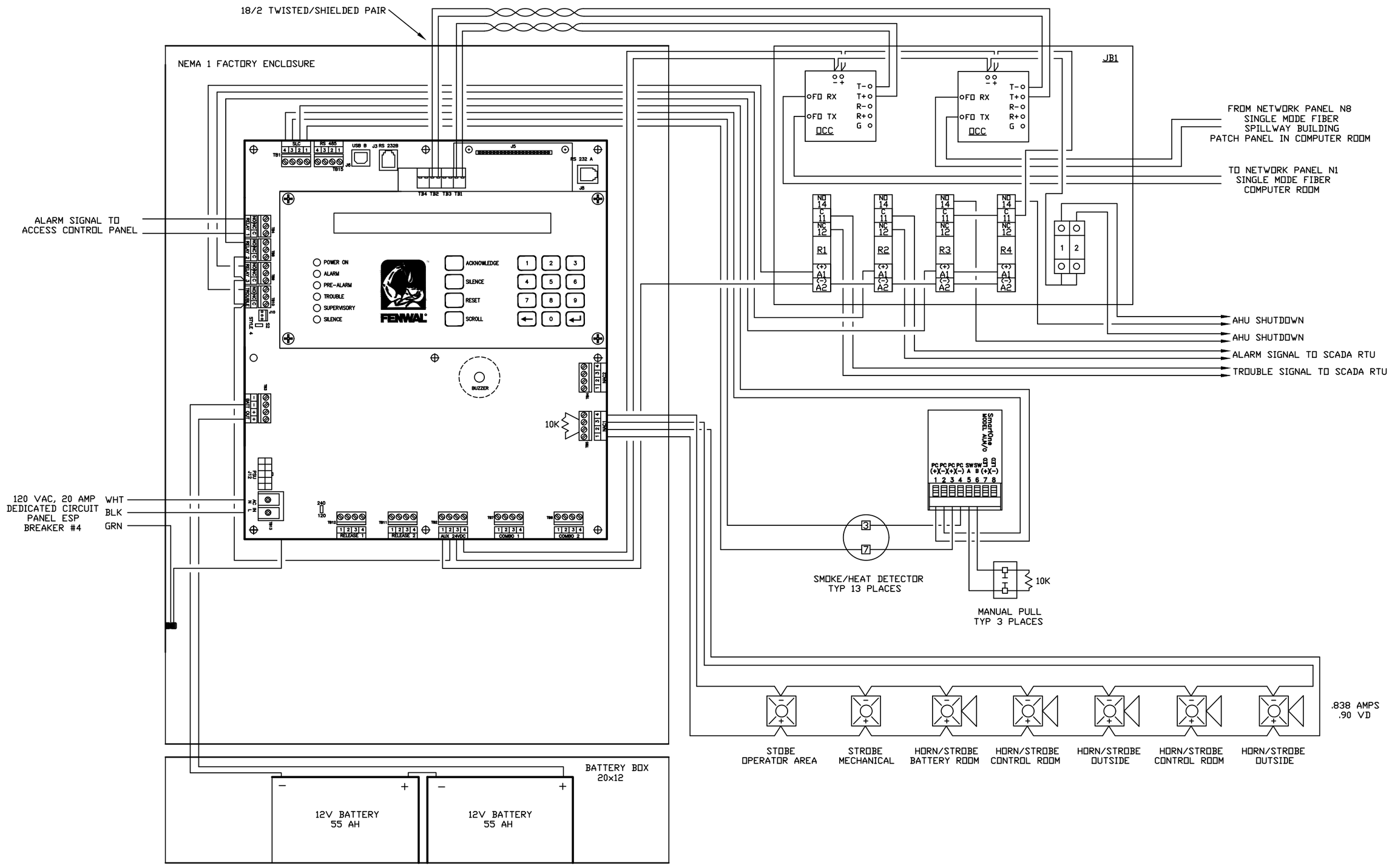

A
28

FIRE CONTROL PANEL N9 WIRING DIAGRAM - ELECTRICAL SWITCH YARD BUILDING

SCALE: NTS

REVISIONS

NO.	DESCRIPTION	BY	DATE
1.	ADD TRANSFORMERS 1-5	LDH	03/08/19

ELECTRIC SCIENTIFIC COMPANY
Engineered Fire Protection Systems
7505 HIGHWAY 7 MINNEAPOLIS, MINNESOTA 55426
TEL. 952-933-4671 FAX 952-933-6541

S:\GARRISONDAM\SWITCHYARDBLDG

NICET CERTIFICATION # 103683
FIRE ALARM SYSTEMS LEVEL III

DRAWN BY: L. HINZ

NICET CERTIFICATION # 101427
FIRE ALARM SYSTEMS LEVEL IV

CHECKED BY: J. COZZI

GARRISON DAM
PLANT FIRE ALARM SYSTEM
RIVERDALE, NORTH DAKOTA

FIRE ALARM PANEL N9 WIRING DIAGRAM
SWITCHYARD CONTROL HOUSE

JOB NO. 400712

SHEET 28 OF SET

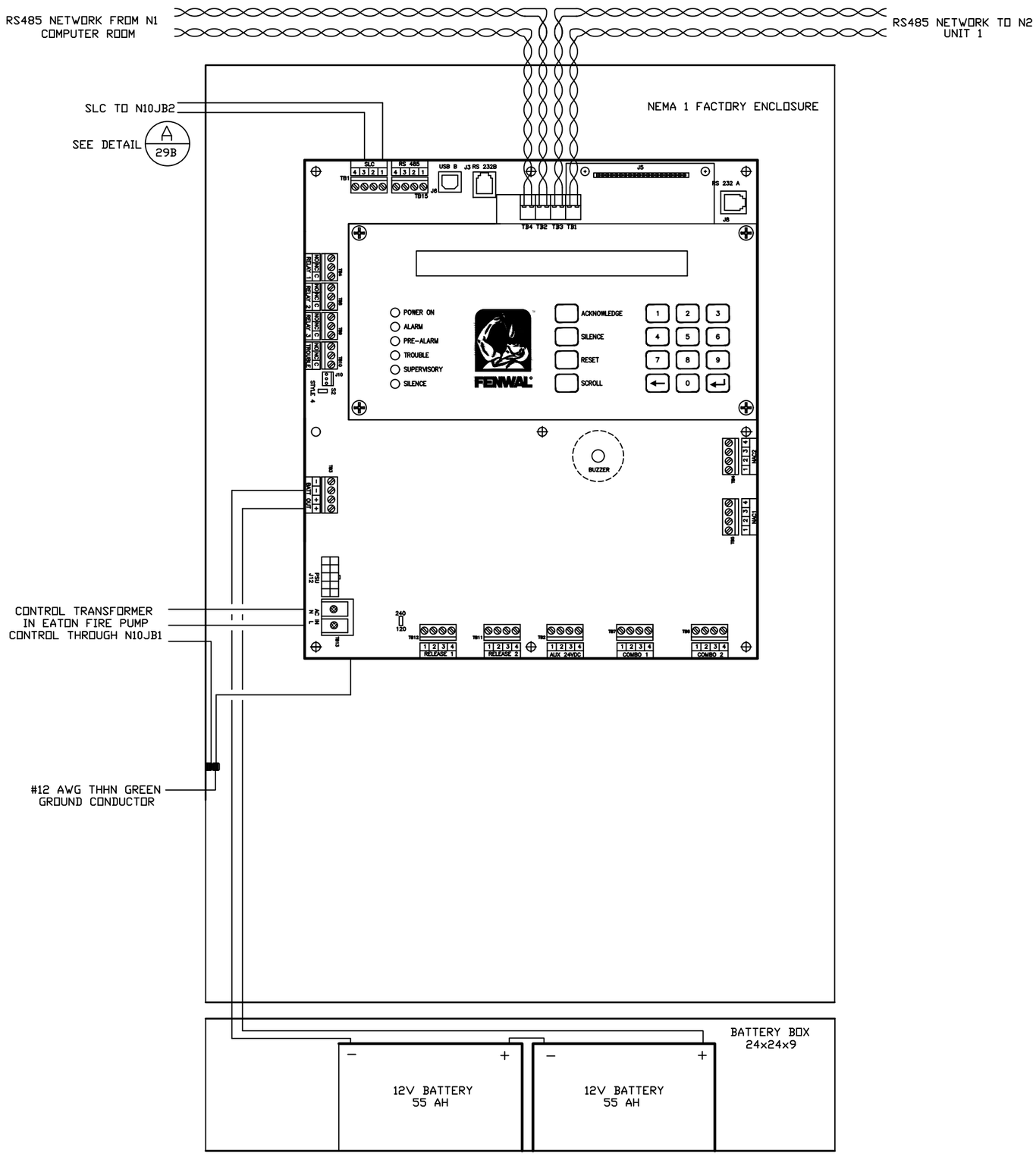

A 29 FIRE CONTROL PANEL N10 WIRING DIAGRAM - FIRE BOOSTER PUMP

SCALE: NTS

REVISIONS

NO.	DESCRIPTION	BY	DATE
1.	ADD TRANSFORMERS 1-5	LDH	03/08/19

ELECTRIC SCIENTIFIC COMPANY
Engineered Fire Protection Systems
7505 HIGHWAY 7 MINNEAPOLIS, MINNESOTA 55426
TEL. 952-933-4671 FAX 952-933-6541

S:\NORTHDAKOTA\GARRISON\DAM

NICET CERTIFICATION # 103683
FIRE ALARM SYSTEMS LEVEL III

NICET CERTIFICATION # 101427
FIRE ALARM SYSTEMS LEVEL IV

DRAWN BY: L. HINZ

CHECKED BY: J. COZZI

GARRISON DAM
PLANT FIRE ALARM SYSTEM
RIVERDALE, NORTH DAKOTA

FIRE CONTROL PANEL N10 WIRING DIAGRAM
FIRE BOOSTER PUMP

JOB NO. 400712

SHEET 29 OF SET

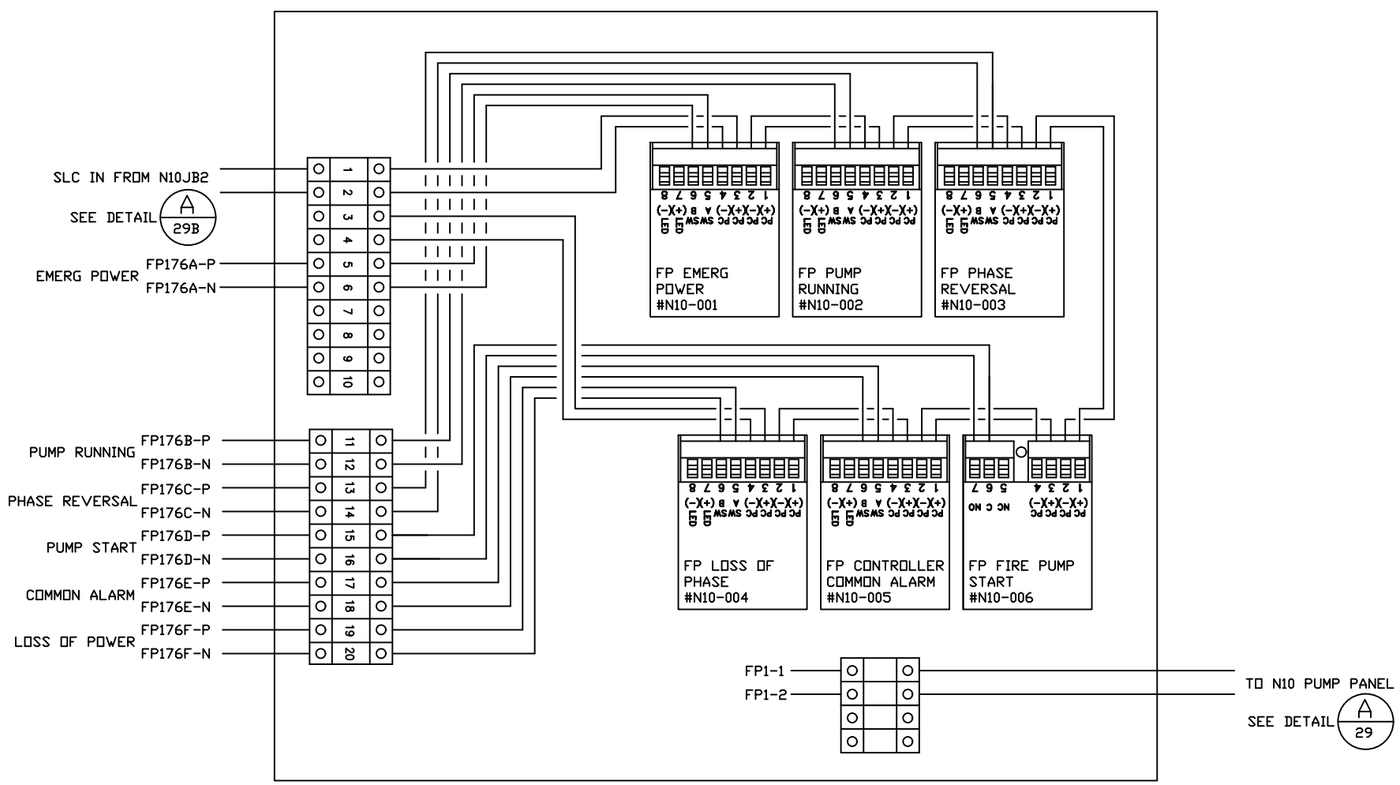

A 29A N10JB1 WIRING DIAGRAM - FIRE BOOSTER PUMP

SCALE: NTS

REVISIONS

NO.	DESCRIPTION	BY	DATE
1.	ADD TRANSFORMERS 1-5	LDH	03/08/19

ELECTRIC SCIENTIFIC COMPANY
Engineered Fire Protection Systems
7505 HIGHWAY 7 MINNEAPOLIS, MINNESOTA 55426
TEL. 952-933-4671 FAX 952-933-6541

S:\GARRISONDAM\UNIT4

NICET CERTIFICATION # 103683 FIRE ALARM SYSTEMS LEVEL III

DRAWN BY: L. HINZ

NICET CERTIFICATION # 101427 FIRE ALARM SYSTEMS LEVEL IV

CHECKED BY: J. COZZI

GARRISON DAM
PLANT FIRE ALARM SYSTEM
RIVERDALE, NORTH DAKOTA

N10JB1 WIRING DIAGRAM
FIRE BOOSTER PUMP

JOB NO. 400712

SHEET 29A OF SET

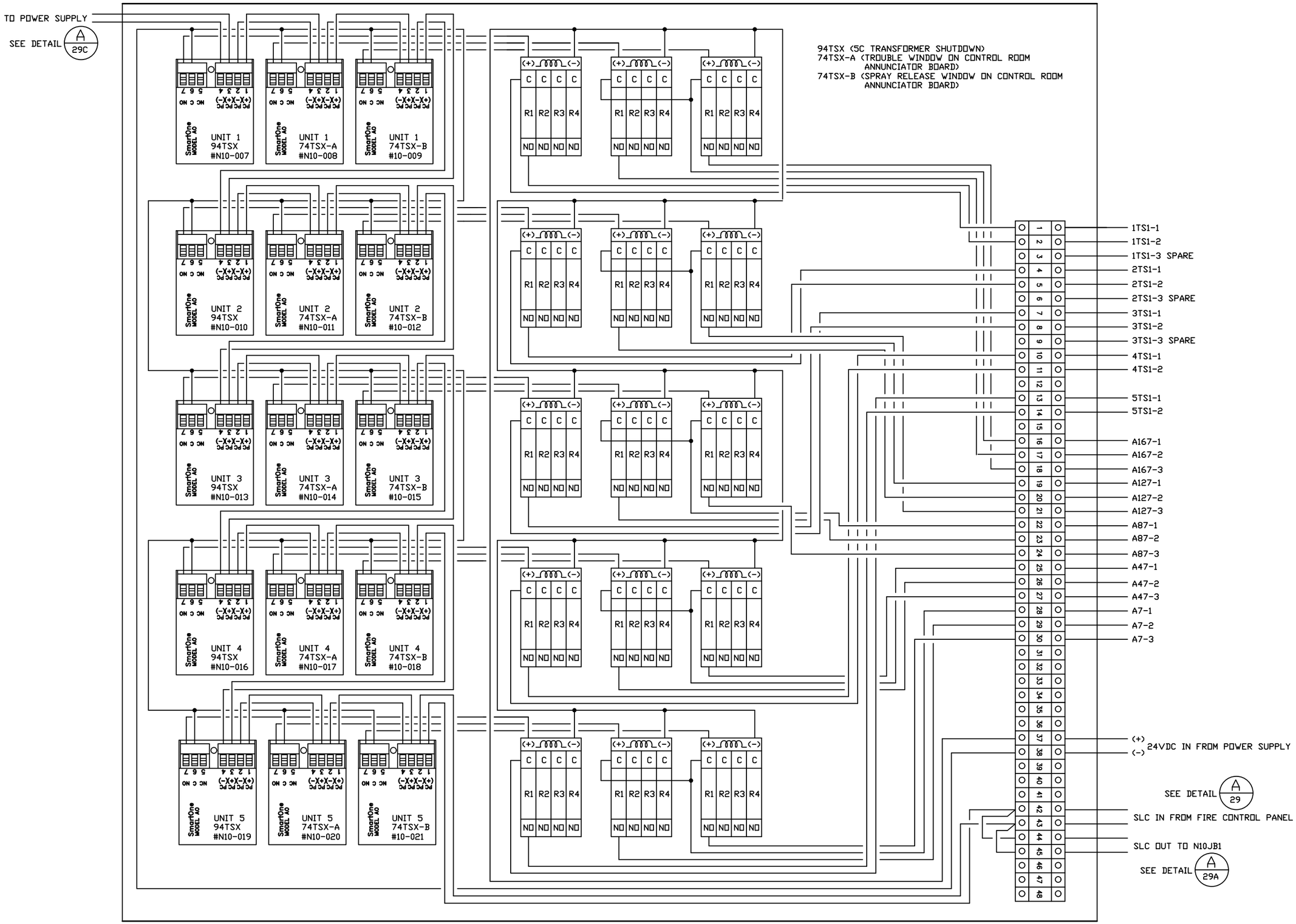

A 29B N10JB2 WIRING DIAGRAM - CABLE SPREADING

SCALE: NTS

REVISIONS

NO.	DESCRIPTION	BY	DATE
1.	ADD TRANSFORMER 1-5	LDH	03/08/19

ELECTRIC SCIENTIFIC COMPANY
Engineered Fire Protection Systems
7505 HIGHWAY 7 MINNEAPOLIS, MINNESOTA 55426
TEL. 952-933-4671 FAX 952-933-6541

S:\GARRISONDAM\UNIT4

NICET CERTIFICATION # 103683 FIRE ALARM SYSTEMS LEVEL III

DRAWN BY: L. HINZ

NICET CERTIFICATION # 101427 FIRE ALARM SYSTEMS LEVEL IV

CHECKED BY: J. COZZI

GARRISON DAM
PLANT FIRE ALARM SYSTEM
RIVERDALE, NORTH DAKOTA

N10JB2 WIRING DIAGRAM
FIRE BOOSTER PUMP

JOB NO. 400712

SHEET 29B OF SET

CALC. BY: L.HINZ

CIRCUIT	SUPV. CURRENT	NO.	TOTAL	ALARM CURRENT	NO.	TOTAL
PANEL:						
FN6000 N10	.20	1	.20	.650	1	.650
FIELD: FENWAL						
ACID	.000450	6	.0027	.000450	6	.0027
NETWORK CARD	.07	1	.07	.07	1	.07
AROD	.000400	15	.006	.000400	15	.006

SUPERVISORY TOTAL: .2787 ALARM TOTAL: .7287

SUPERVISORY BATTERY CURRENT: .2787 X 90 HOURS = 25.083 AMP/HOURS

TOTAL ALARM CURRENT: .7287 X .167 HOURS = .1216929 AMP/HOURS

SUB-TOTAL: 25.204692 AMP/HOURS

1.1 DE-RATING FACTOR = 27.725161 AMP/HOURS

BATTERY SIZE USED: 55 AMP/HOURS

TOTAL REQUIRED: 27.72 AMP/HOURS

A 29C BATTERY CALCULATION - NODE 10

SCALE: NA

CALC. BY: L.HINZ

CIRCUIT	SUPV. CURRENT	NO.	TOTAL	ALARM CURRENT	NO.	TOTAL
PANEL: POWER SUPPLY #1						
AL1024ULX	.05	1	.05	.05	1	.05
FIELD: FENWAL						
RELAY				.50	15	7.5

SUPERVISORY TOTAL: .05 ALARM TOTAL: 7.55

SUPERVISORY BATTERY CURRENT: .05 X 90 HOURS = 4.5 AMP/HOURS

TOTAL ALARM CURRENT: 7.55 X .167 HOURS = 1.26085 AMP/HOURS

SUB-TOTAL: 5.76085 AMP/HOURS

1.1 DE-RATING FACTOR = 6.336935 AMP/HOURS

BATTERY SIZE USED: 10 AMP/HOURS

TOTAL REQUIRED: 6.33 AMP/HOURS

B 29C BATTERY CALCULATION - POWER SUPPLY

SCALE: NA

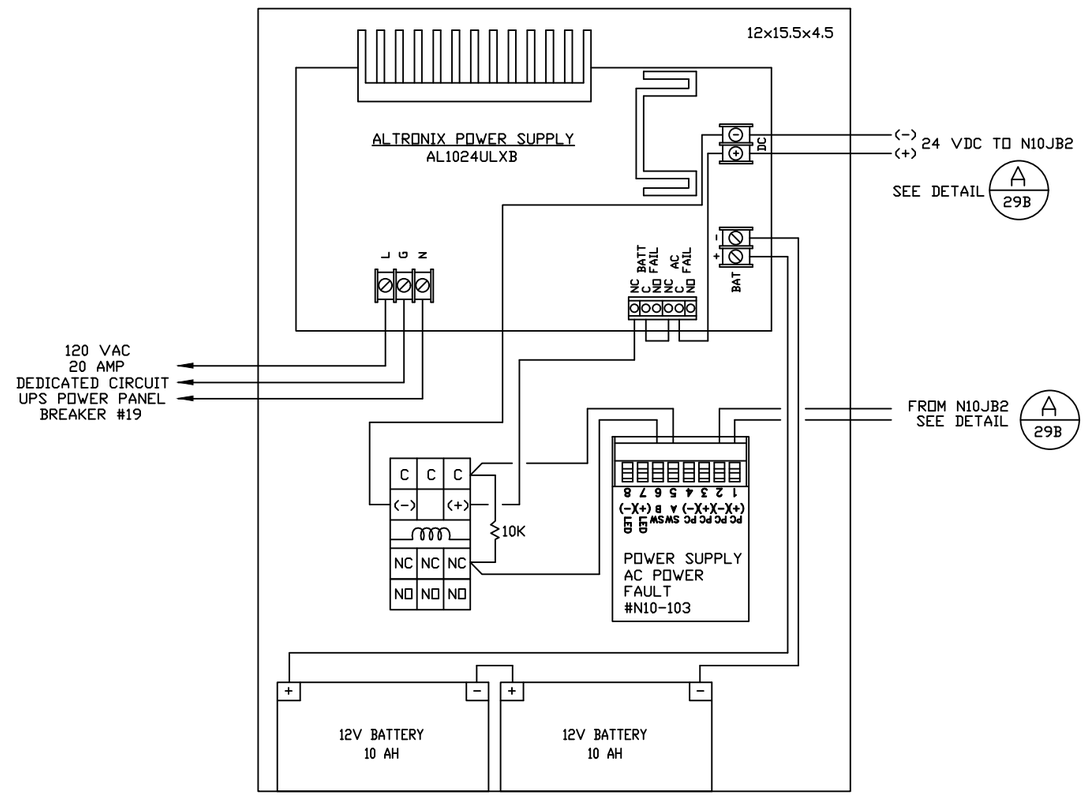

C 29C NODE 10 POWER SUPPLY WIRING DIAGRAM - COMPUTER ROOM

SCALE: NA

REVISIONS

NO.	DESCRIPTION	BY	DATE
1.	ADD TRANSFORMERS 1-5	LDH	03/08/19

ELECTRIC SCIENTIFIC COMPANY
Engineered Fire Protection Systems
7505 HIGHWAY 7 MINNEAPOLIS, MINNESOTA 55426
TEL. 952-933-4671 FAX 952-933-6541

S:\GARRSONDAM

NICET CERTIFICATION # 103683 FIRE ALARM SYSTEMS LEVEL III

DRAWN BY: L. HINZ

NICET CERTIFICATION # 101427 FIRE ALARM SYSTEMS LEVEL IV

CHECKED BY: J. COZZI

GARRISON DAM
PLANT FIRE ALARM SYSTEM
RIVERDALE, NORTH DAKOTA

N10 POWER SUPPLY WIRING DIAGRAM
COMPUTER ROOM

JOB NO. 400712

SHEET 29C OF SET

CIRCUIT	SUPV. CURRENT	NO.	TOTAL	ALARM CURRENT	NO.	TOTAL
PANEL: POWER SUPPLY #2, #3, #4						
MULTI-ZONE POWER SUPPLY	.05	1	.05	.05	1	.05
FIELD: FENWAL						
VESDA VLI	.415	1	.415	.440	1	.440

SUPERVISORY TOTAL: .465 ALARM TOTAL: .49

SUPERVISORY BATTERY CURRENT: .465 X 90 HOURS = 41.85 AMP/HOURS

TOTAL ALARM CURRENT: .49 X .167 HOURS = .08183 AMP/HOURS

SUB-TOTAL: 41.93183 AMP/HOURS

1.1 DE-RATING FACTOR = 46.125013 AMP/HOURS

BATTERY SIZE USED: 66 AMP/HOURS

TOTAL REQUIRED: 46.12 AMP/HOURS

B 30 BATTERY CALCULATION - POWER SUPPLY #2, #3 & #4

SCALE: NA

CIRCUIT	SUPV. CURRENT	NO.	TOTAL	ALARM CURRENT	NO.	TOTAL
PANEL: NETWORK PANEL N1						
FN6000	.20	1	.20	.650	1	.650
FIELD:						
NETWORK CARD	.070	1	.070	.070	1	.070
MEDIA CONVERTOR	.058	1	.058	.058	1	.058
ACID	.000450	11	.00495	.000450	11	.00495
ACID (NEW)	.000580	9	.00522	.000580	9	.00522
SMOKE/HEAT DETECTOR	.000350	134	.0469	.000425	134	.05695
ASM	.000500	9	.0045	.000500	9	.0045
REMOTE DISPLAY CONTROL MODULE	.064	1	.064	.085	1	.085
AROD	.000400	4	.0016	.000400	4	.0016

SUPERVISORY TOTAL: .45517 ALARM TOTAL: .93622

SUPERVISORY BATTERY CURRENT: .45517 X 90 HOURS = 40.9653 AMP/HOURS

TOTAL ALARM CURRENT: .93622 X .167 HOURS = .1563487 AMP/HOURS

SUB-TOTAL: 41.121648 AMP/HOURS

1.1 DE-RATING FACTOR = 45.233812 AMP/HOURS

BATTERY SIZE USED: 55 AMP/HOURS

TOTAL REQUIRED: 45.23 AMP/HOURS

A 30 BATTERY CALCULATION - FN6000 PANEL N1

SCALE: NA

CALC. BY: L.HINZ

CIRCUIT	SUPV. CURRENT	NO.	TOTAL	ALARM CURRENT	NO.	TOTAL
PANEL: POWER SUPPLY #1						
A1024ULR	.05	1	.05	.05	1	.05
FIELD: FENWAL						
MT HORN/STROBE - 30				.107	1	.107
MT HORN/STROBE - 75				.153	4	.612
MT HORN/STROBE - 110				.184	8	1.472

SUPERVISORY TOTAL: .05 ALARM TOTAL: 2.241

SUPERVISORY BATTERY CURRENT: .05 X 90 HOURS = 4.5 AMP/HOURS

TOTAL ALARM CURRENT: 2.241 X .167 HOURS = .374247 AMP/HOURS

SUB-TOTAL: 4.874247 AMP/HOURS

1.1 DE-RATING FACTOR = 5.3616717 AMP/HOURS

BATTERY SIZE USED: 10 AMP/HOURS

TOTAL REQUIRED: 5.36 AMP/HOURS

C 30 BATTERY CALCULATION - POWER SUPPLY #1

SCALE: NA

REVISIONS

NO.	DESCRIPTION	BY	DATE
4.	ADD FAN/MOTORIZED VENT	LDH	07/13/15
5.	ASBUILT	LDH	08/31/15
6.	ADD TRANSFORMERS 1-5	LDH	03/08/19
7.	AIR SAMPLING DETECTOR UPGRADE	LDH	06/10/20
8.	ASBUILT	LDH	01/26/21

ELECTRIC SCIENTIFIC COMPANY
Engineered Fire Protection Systems
7505 HIGHWAY 7 MINNEAPOLIS, MINNESOTA 55426
TEL. 952-933-4671 FAX 952-933-6541

S:\GARRISONDAM\FIREALARM

NICET CERTIFICATION # 103683 FIRE ALARM SYSTEMS LEVEL III

DRAWN BY: L. HINZ

NICET CERTIFICATION # 101427 FIRE ALARM SYSTEMS LEVEL IV

CHECKED BY: J. COZZI

GARRISON DAM
PLANT FIRE ALARM SYSTEM
RIVERDALE, NORTH DAKOTA

BATTERY CALCULATIONS
NODE 1 PANEL

JOB NO. 400712

SHEET 30 OF SET

CALC. BY: L.HINZ

CIRCUIT	SUPV. CURRENT	NO.	TOTAL	ALARM CURRENT	NO.	TOTAL
PANEL: NETWORK PANEL #8						
FN6000	.20	1	.20	.650	1	.650
FIELD: FENWAL						
NETWORK CARD	.070	1	.070	.070	1	.070
MEDIA CONVERTOR	.058	2	.116	.058	2	.116
ACID	.000450	2	.0009	.000450	2	.0009
SMOKE/HEAT DETECTOR	.000350	10	.0035	.000425	10	.00425
HORN/STROBE				.153	2	.306

SUPERVISORY TOTAL: .3904 ALARM TOTAL: 1.14715

SUPERVISORY BATTERY CURRENT: .3904 X 90 HOURS = 35.136 AMP/HOURS

TOTAL ALARM CURRENT: 1.14715 X .167 HOURS = .191574 AMP/HOURS

SUB-TOTAL: 35.327574 AMP/HOURS

1.1 DE-RATING FACTOR = 38.860331 AMP/HOURS

BATTERY SIZE USED: 55 AMP/HOURS TOTAL REQUIRED: 38.86 AMP/HOURS

A/31 BATTERY CALCULATION - FN6000 PANEL N8

SCALE: NA

CALC. BY: L.HINZ

CIRCUIT	SUPV. CURRENT	NO.	TOTAL	ALARM CURRENT	NO.	TOTAL
PANEL: NETWORK PANEL #4						
FN6000	.20	1	.20	.650	1	.650
FIELD: FENWAL						
NETWORK CARD	.070	1	.070	.070	1	.070
MEDIA CONVERTOR	.058	2	.116	.058	2	.116
ACID	.000450	2	.0009	.000450	2	.0009
SMOKE/HEAT DETECTOR	.000350	2	.0007	.000425	2	.00085
HORN/STROBE				.184	2	.368

SUPERVISORY TOTAL: .3876 ALARM TOTAL: 1.20575

SUPERVISORY BATTERY CURRENT: .3876 X 90 HOURS = 34.884 AMP/HOURS

TOTAL ALARM CURRENT: 1.20575 X .167 HOURS = .2013602 AMP/HOURS

SUB-TOTAL: 35.08536 AMP/HOURS

1.1 DE-RATING FACTOR = 38.593896 AMP/HOURS

BATTERY SIZE USED: 55 AMP/HOURS TOTAL REQUIRED: 38.59 AMP/HOURS

B/31 BATTERY CALCULATION - FN6000 PANEL N7

SCALE: NA

REVISIONS

NO.	DESCRIPTION	BY	DATE
1.	RELEASE FOR APPROVAL & REVIEW	LDH	10/29/10
2.	ASBUILT	LDH	05/26/11
3.	ADD TRANSFORMERS 1-5	LDH	03/08/19

ELECTRIC SCIENTIFIC COMPANY
Engineered Fire Protection Systems
7505 HIGHWAY 7 MINNEAPOLIS, MINNESOTA 55426
TEL. 952-933-4671 FAX 952-933-6541

S:\GARRSON\DAM\FREALARM

NICET CERTIFICATION # 103683 FIRE ALARM SYSTEMS LEVEL III

DRAWN BY: L. HINZ

NICET CERTIFICATION # 101427 FIRE ALARM SYSTEMS LEVEL IV

CHECKED BY: J. COZZI

GARRISON DAM
PLANT FIRE ALARM SYSTEM
RIVERDALE, NORTH DAKOTA

BATTERY CALCULATIONS
PANEL N7 & N8

JOB NO. 400712

SHEET 31 OF SET

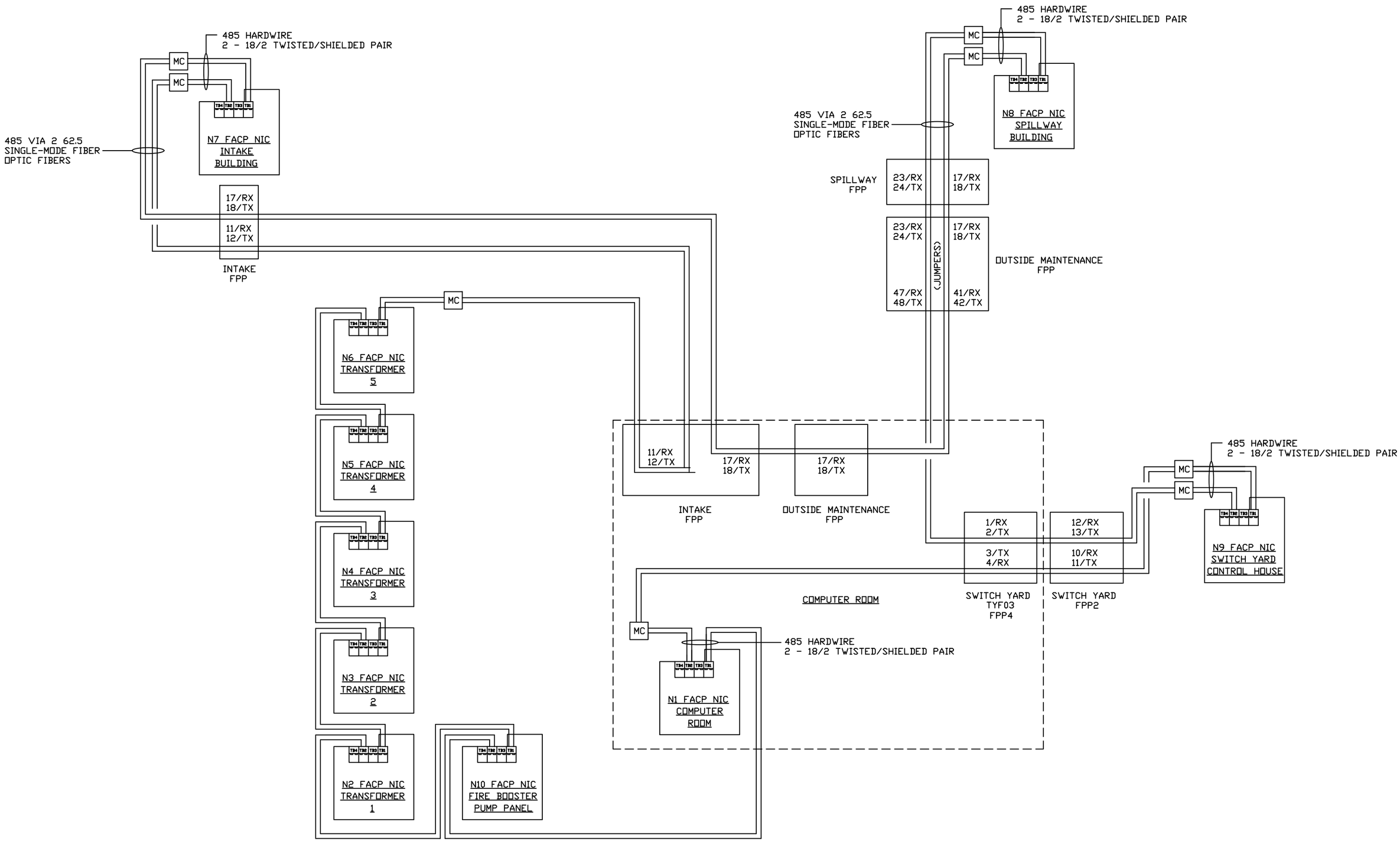

A
32

FIRE CONTROL PANEL NETWORK

SCALE: NTS

REVISIONS

NO.	DESCRIPTION	BY	DATE
1.	RELEASE FOR APPROVAL & REVIEW	LDH	07/11/11
2.	ADD PANEL 9	LDH	03/12/13
3.	ADD TRANSFORMERS 1-5	LDH	03/08/19

ELECTRIC SCIENTIFIC COMPANY
Engineered Fire Protection Systems
7505 HIGHWAY 7 MINNEAPOLIS, MINNESOTA 55426
TEL. 952-933-4671 FAX 952-933-6541

S:\GARRISONDAM\FIREALARM

NICET CERTIFICATION # 103683
FIRE ALARM SYSTEMS LEVEL III

DRAWN BY: L. HINZ

NICET CERTIFICATION # 101427
FIRE ALARM SYSTEMS LEVEL IV

CHECKED BY: J. COZZI

GARRISON DAM
PLANT FIRE ALARM SYSTEM
RIVERDALEN, NORTH DAKOTA

FIRE DETECTION SYSTEM
FIRE CONTROL PANEL NETWORK

JOB NO. 400712

SHEET 32 OF SET