USCGC HEALY (WAGB 20)

SPECIFICATION FOR DOCKSIDE REPAIRS

FY2027

Compiled By: Tristan J Hustrulid

(Rev-0, 11 June 2026)

TABLE OF CONTENTS

REVISIONS RECORD iv
CONSOLIDATED LIST OF REFERENCES v
CONSOLIDATED LIST OF GOVERNMENT-FURNISHED PROPERTY xv
CONSOLIDATED LIST OF CRITICAL INSPECTION ITEMS xix
PRINCIPAL CHARACTERISTICS xx
General Requirements 1
WORK ITEM 1: Fire Prevention, Provide 14
WORK ITEM 2: Temporary Services, Provide - Cutter 17
WORK ITEM 3: Tenting, Provide (Optional) 21
WORK ITEM 4: Sea Trial Performance, Support, Provide 25
WORK ITEM 5: Recapitalize Science Data Network Infrastructure (SLEP) 29
WORK ITEM 6: Recapitalize CGOne Network Infrastructure (SLEP) 34
WORK ITEM 7: Recapitalize Ice Radar (SLEP) 38
WORK ITEM 8: Impressed Current Cathodic Protection, Upgrade 43
WORK ITEM 9: Oceanographic Winch, Inspect and Test 49
WORK ITEM 10: Scientific and Ocean Engineering Systems, Control System Groom and Indicator Calibration 53
WORK ITEM 11: Damage Control and Firefighting Systems, PMS 57
WORK ITEM 12: Oily Water Separator, Annual Maintenance 91
WORK ITEM 13: Auxiliary Seawater System (ASW) Orifice Plate, Renew 94
WORK ITEM 14: Aux Diesel Generator Starter (SLEP) 99
WORK ITEM 15: Boiler Tube Sheet and Gauge Glass, Replace (SLEP) 108
WORK ITEM 16: Steam Coil Pre-Heaters, Inspect and Test 115
WORK ITEM 17: Refrigeration Plant, Maintain 120
WORK ITEM 18: Boiler, Annual Maintenance 124
WORK ITEM 19: Bow Crane, Biennial Inspect and Test 133
WORK ITEM 20: Internal Hoists, Maintenance, Inspection and Test 141
WORK ITEM 21: Grey Water Holding Tank(s), Clean and Inspect 145
WORK ITEM 22: Sewage Piping, Clean and Flush 150
WORK ITEM 23: Sewage Holding Tank(s), Clean and Inspect 154
WORK ITEM 24: Main Motor Lube Oil Tank Heater, Inspect 159
WORK ITEM 25: Ship Service Air Compressor, Overhaul 163
WORK ITEM 26: Flex Hose Assemblies, Renew 169
WORK ITEM 27: Fuel Oil Purifier (FOP) Overhaul 177
WORK ITEM 28: Lube Oil Purifier (LOP) Overhaul 184
WORK ITEM 29: Relocate Cycloconverter Strainers (SLEP) 192
WORK ITEM 30: Recapitalize MSW & ASW Valves (SLEP) 197
WORK ITEM 31: Science Sea Water Strainer (SLEP) 206
WORK ITEM 32: A-Frames, Inspect and Repair 211
WORK ITEM 33: Science Van Monorail System, Overhaul 218
WORK ITEM 34: Steam Trap, Renew 225
WORK ITEM 35: Steam Trap, Replace 232
WORK ITEM 36: Distilling Plant Condensate Dump Valves, Replace 236
WORK ITEM 37: Anchor Windlass, Inspect and Repair 241
WORK ITEM 38: Mooring Capstan, Level 2 Overhaul 246
WORK ITEM 39: Port & Starboard Miranda Davit, Biennial Inspect and Repair 252
WORK ITEM 40: Aft Crane (Starboard), Biennial maintenance, Inspect and Repair 259
WORK ITEM 41: Aft Articulating Crane (Port), Annual maintenance, Inspect and Repair 269

WORK ITEM 42: Deck Crane (Starboard), TB 100-55, Annual maintenance, Inspect and Repair.....277
WORK ITEM 43: Deck Crane (Port), TB 100-55, Bi-Annual maintenance, Inspect and Repair.....288
WORK ITEM 44: Trawl / Core Winch, Inspect and Test.....300
WORK ITEM 45: Decks (Interior), Preserve.....304
WORK ITEM 46: U/W Body, Diver Inspect.....309
WORK ITEM 47: Deck Covering (Slip-Resistant) Forecastle Deck, Renew.....323
WORK ITEM 48: Deck Covering (Insulating), Replace 332
WORK ITEM 49: Superstructure, Preserve (Partial).....338
WORK ITEM 50: Stack, Preserve (Partial) 348
WORK ITEM 51: Deck sockets, Renewal.....357

REVISIONS RECORD

This page is used to record specification revisions, which may have occurred subsequent to a Revision 0 (Rev-0) package. Information listed is intended to provide contractors and field unit personnel a means to ensure all the current specification revision pages are present when reviewing or utilizing this specification package.

DATE	REV#	WORK ITEM#	CHANGES MADE

NOTE : All work item and paragraph numbers listed above for a given revision correspond to same numbers in the previous revision. This revised specification is self-contained with all of the above listed changes incorporated.

CONSOLIDATED LIST OF REFERENCES

The below-listed documents form a part of this specification to the extent specified herein. Approval/publication dates or revision dates/numbers are also identified, to ensure that same document versions are used at the time of specification writing and during contract execution.

All Coast guard drawings, technical publications, and standard specifications will be provided to contractors by the Coast Guard at an appropriate time, or upon request, free of charge. Other Government documents may be accessed – free of charge – from links located on the SFLC website. Commercial sites provide access to their respective documents.

COAST GUARD DRAWINGS

420-WAGB-451-011, SLEP Ice Radar Installation BWD & Details

420-WAGB-423-013, SPS-461 GPS System Installation BWD & Details

420-WAGB-426-010, Gyro System MK39 & MK27-F Elementary Wiring Diagram and Details

420-WAGB-423-011, 1SG38-CGECDIS(V)WAGB-420 Install BWD and Details

420-WAGB-423-015, Booklet of Electronic 1SG38-AIS-AFLOAT(V) Installation EWD & Details

420-WAGB-451-005, AN/SPS-50(V)4 Radar Install Block Wiring Diagram

420-WAGB-451-006, AN/SPS-50(V)4 Installation Wiring Data (COED)

420-WAGB-180-003, Rev. H, Mechanical & Electrical Foundation Arrangement

420-WAGB-200-001, Rev. G, Machinery Arrangement for Motor Room, Aux Machinery Rooms, Generator Room, Boiler Room, and Forward & Aft Machinery Spaces

420-WAGB-430-001, Rev. H, General Arrangement of Elec Equipment in IC Equipment Room

420-WAGB-633-002, Rev. D, Elementary & Isometric Cathodic Protection Wiring Diagram

420-WAGB-320-002, Rev. BA, Power System One-Line Diagram

420-WAGB_591_501, Rev E, Winch Assembly Oceanographic

420-WAGB_801_1, Rev K, Booklet of General Drawings

420-WAGB-612-003, Rev E, Helicopter Safety Nets

420-WAGB-801-001, Rev K, Booklet of General Drawings

NAVAIR Drawing 626883, Rev D, Visual Landing Aids Installation and Clearance Requirements, WAGB-420 Class Ships

420-WAGB-412-5, Rev 4, SLEP Polar Science Network Fiber System Block Wiring Diagram & Details

420-WAGB-412-006 Rev 3, CGOne Fiber System Block Wiring Diagram & Details

420-WAGB_591_551 Overall Block Diagram Science Winch Control Diagram

420-WAGB_591_521 Remote VDT Console

420-WAGB_591_550 Trawl/Core Winch Drives

420-WAGB_591_549 Oceanographic Winch Drives 1 & 2

420 WAGB 671-002, Rev D, CO2 Room

FL-1204-3, Rev A, Fleet Welded Padeyes and Links

420-WAGB-593-008, Rev A, Piping Mods GEA Westfalia OWS Install

420-WAGB-524-001, Rev P, Diagram Auxiliary Seawater System

420 WAGB 312-001, Rev -, Emergency Power Generator Set Start Air Reducing Valve
420 WAGB 551-005, Rev D, Diagram Starting Air System
420 WAGB 551-009, Rev 1, SLEP ADG Starter Motor and Regulator Mods
420 WAGB 259-005, Rev C, Machinery Plant Exhaust Gas Piping A & D
420-WAGB-535-001, Rev M, Diagram Steam, Feed & Condensate System
420-WAGB-801-001, Rev K, Booklet of General Drawings
420-WAGB-320-016, Rev-D, HVAC Power System 01 Level
420-WAGB-320-017, Rev-D, HVAC Power System 02 Level
420-WAGB-320-018, Rev-E, HVAC Power System 03 Level
420-WAGB-320-019, Rev-C, HVAC Power System 04 Level & Above
420-WAGB-508-001, Rev-F, PP & Machinery Insulation Schedule
420-WAGB-508-002, Rev-D, Piping & Machinery Insulation Schedule L/M
420-WAGB-509-001, Rev-B, HVAC Insulation Schedule
420-WAGB-509-002, Rev-B, HVAC Insulation Schedule L/M
420-WAGB-510-002, Rev-H, HVAC 01 Level & Above
420-WAGB-511-001, Rev-E, HVAC Heater List
420-WAGB-512-642, Rev-C, Coil Assy Model# 1D5-9-5610F-.5-H-B
420-WAGB-512-643, Rev-D, Coil Assy Model# 1D5-12-5608F-.7-H-B
420-WAGB-512-644, Rev-D, Coil Assy Model# 1D5-18-5608F-1.5-H-B
420-WAGB-512-647, Rev-C, Coil Assy Model# 1D11-18-5608F-2.1-H-B
420-WAGB-512-649, Rev-C, Coil Assy Model# 1D13-24-5609F-3.3-H-B
420-WAGB-512-650, Rev-C, Coil Assy Model# 1D14-18-5606F-2.6-H-B
420-WAGB-512-654, Rev-D, Coil Assy Model# 1D22-36-5606F-8.3-H-B
420-WAGB-512-655, Rev-E, Coil Assy Model# 1D16-12-5606F-2-H-B
420-WAGB-512-675, Rev-C, Coil Assy Model# 1D24-42-5604F-10.5-H-B
420-WAGB-512-676, Rev-D, Coil Assy Model# 1D16-42-5604F-7-H-B
420-WAGB-512-677, Rev-D, Coil Assy Model# 1D12-30-5604F-3.8-H-B
420-WAGB-514-015, Rev -, Ship Stores Refrigeration Electrical Drawing
420-WAGB-514-016, Rev A, Ship Stores Refrigeration Condensing Unit
420-WAGB-514-017, Rev -, Ardick Marine Condenser Model NFC-56Q
420-WAGB-514-018, Rev -, Ship Stores Refrigeration Adrick Model ADR-074Q
420-WAGB_167_2, Rev H, Manhole List
420-WAGB_528_1, Rev G, Diagram of Plumbing and Int Deck Drain and Vacuum Collection System
420-WAGB_507_1, Rev C, Valve Label Plates
420-WAGB_256_1, Rev J, Diagram Main Seawater Circulating System
420-WAGB_256_10, Rev -. SLEP Cycloconverter MSW Strainer Relocation
420-WAGB_505_1, Rev D, Piping General Notes and Installation Details
420-WAGB_505_74, Rev D. Piping Arrangement Unit 106
420-WAGB_505_76, Rev J. Piping Arrangement Unit 107
420-WAGB_505_80, Rev K, Piping Arrangement Unit 126
420-WAGB_635_1, Rev D, Insulation Layouts & Dets

420-WAGB-101-4, Rev C, Construction Drawing Units 105
420-WAGB_524_1, Rev P. Diagram Auxiliary Seawater System
420-WAGB_524_7, Rev B, SLEP Auxiliary Seawater System Mods
420-WAGB_524_8, Rev 1. SLEP Aft Science SW Duplex Strainer Install
420-WAGB_665_2, Rev J, Misc Monorails
420-WAGB-573-001, Rev B, Crane Pedestals Arr & Dets
420-WAGB-573-002, Rev D, Boom Rests
420-WAGB-573-003, Rev A, Science Hoist
420-WAGB-573-511, Rev F, General Arrangement KB 15-45
420-WAGB-573-545, Rev G, Aft. "A" Frame Base Weldment
420-WAGB-573-546, Rev E, Stbd "A" Frame Base Weldment
420-WAGB-573-547, Rev -, Hydraulic Cylinder Aft a-Frame
420-WAGB-573-548, Rev -, Hydraulic Cylinder Starboard a-Frame
420-WAGB-573-558, Rev C, Aft. "A" Frame Stop Tube Weldment
420-WAGB-573-559, Rev B, Side "A" Frame Stop Tube Weldment
420-WAGB-573-9, Rev -, Assembly Details Aft A-Frame
FL-1702-11, Sheave Inspection
420-WAGB-589-005, Rev B, Science Hoist Arrangement
420-WAGB-589-506, Rev C, General Arrangement Trash Hoist
420-WAGB-589-507, Rev E, General Arrangement Stores Hoist
420-WAGB-591-501, Rev E, Winch Assembly Oceanographic
420-WAGB-591-502, Rev E, Winch Assembly Traw/Core
420-WAGB-801-001, Rev K, Booklet of General Drawings
420-WAGB-801-1, Rev -, Booklet of General Drawings
420-WAGB-801-1, Rev K, Booklet of General Drawings
420-WAGB-801-001, Rev J, Booklet of General Drawings
420-WAGB-101-028, Rev D, Construction Drawings for Units 410 & 411
420-WAGB-101-029, Rev D, Construction Drawings for Units 400 & 401
420-WAGB-101-031, Rev D, Construction Drawings for Unit 402
420-WAGB-101-032, Rev D, Construction Drawings for Units 424 & 434
420-WAGB-101-035, Rev C, Construction Drawings for Units 442, 443, & 480
420-WAGB-101-036, Rev B, Construction Drawings for Units 444 & 445
420-WAGB-101-037, Rev C, Construction Drawings for Units 446 & 447
420-WAGB-101-038, Rev B, Construction Drawings for Units 448 & 449
420-WAGB-101-039, Rev D, Construction Drawing Units 450 & 451
420-WAGB-101-040, Rev C, Construction Drawing Units 452 & 453
420-WAGB-101-041, Rev B, Construction Drawing Units 454 & 455
420-WAGB-101-042, Rev B, Construction Drawing Units 456 & 457
420-WAGB-101-043, Rev C, Construction Drawing Units 412 & 413
420-WAGB-101-044, Rev C, Construction Drawing Units 415 & 000
420-WAGB-101-045, Rev D, Construction Drawing Units 422 & 423

420-WAGB-101-046, Rev B, Construction Drawing Unit 498 Stack
420-WAGB-101-055, Rev E, Construction Drawing Units 425-435
420-WAGB-101-056, Rev B, Construction Drawing Units 703 & 704
420-WAGB-101-058, Rev B, Construction Drawing Unit 711
420-WAGB-101-064, Rev D, Shell Expansion
420-WAGB-101-068, Rev C, Construction Drawing Units 432 & 433
420-WAGB-101-069, Rev B, Construction Drawing Units 458 & 459
420-WAGB-101-070, Rev B, Construction Drawing Units 460 & 461
420-WAGB-101-073, Rev E, Construction Drawing Units 720 & 721
420-WAGB-101-075, Rev C, Construction Drawing Unit 470
420-WAGB-161-001, Rev A, Forefoot Casting
420-WAGB-161-002, Rev D, Shaft Bossing Casting
420-WAGB-161-003, Rev B, Rudder Horn
420-WAGB-161-004, Rev -, Forefoot Transition Castings
420-WAGB-161-010, Rev -, Stern Tube Casting
420-WAGB-163-001, Rev D, Sea Chest and Vent Modifications
420-WAGB-184-014, Rev 1, SLEP SBP 29 & EM 304 Transducer Casings Install
420-WAGB-185-002, Rev C, Anchor Windlass Foundation
420-WAGB-185-003, Rev C, Series 353 Capstan and Mooring Winches FDNS
420-WAGB-200-001 Rev F, Machy Arrg List for Motor Rm, Aux Machy RMS, Gen Rm, Boiler Rms & Fwd & Aft Mach
420-WAGB-243-001, Rev A, Shafting Arrangements
420-WAGB-243-002, Rev A, Shaft Forgings
420-WAGB-243-003, Rev C, Shafting Details
420-WAGB-314-006, Rev. B, 400 Hz Helo Service Power
420-WAGB-314-503, Rev. -, Schematic Diagram, Frequency Converter, Model 278-1M13
420-WAGB-320-002, Rev AH, Power System One-Line Diagram
420-WAGB-320-002, Rev. BC, Power System One Line Diagram
420-WAGB-320-016, Rev-D, HVAC Power System 01 Level
420-WAGB-320-017, Rev-D, HVAC Power System 02 Level
420-WAGB-320-018, Rev-E, HVAC Power System 03 Level
420-WAGB-320-019, Rev-C, HVAC Power System 04 Level & Above
420-WAGB-424-004, Rev L, Hull Mounted Transducers Installation Details
420-WAGB-424-006, Rev E, General Arrangement of Elec Equipment – Transducer Well
420-WAGB-424-501, Rev -, Outline - Ice Hardened Sea Chest
420-WAGB-424-502, Rev -, Outline - Ice Hardened Sea Chest
420-WAGB-424-617, Rev -, Outline-Ice Hardened Sea Chest for Spare Transducers
420-WAGB-431-002, Rev. C, IC Panels Cabling Connections Book
420-WAGB-508-001, Rev-F, PP & Machinery Insulation Schedule
420-WAGB-509-001, Rev-B, HVAC Insulation Schedule
420-WAGB-509-002, Rev-B, HVAC Insulation Schedule L/M
420-WAGB-510-002, Rev-H, HVAC 01 Level & Above

420-WAGB-511-001, Rev-E, HVAC Heater List
420-WAGB-512-642, Rev-C, Coil Assy Model# 1D5-9-5610F-.5-H-B
420-WAGB-512-643, Rev-D, Coil Assy Model# 1D5-12-5608F-.7-H-B
420-WAGB-512-644, Rev-D, Coil Assy Model# 1D5-18-5608F-1.5-H-B
420-WAGB-512-647, Rev-C, Coil Assy Model# 1D11-18-5608F-2.1-H-B
420-WAGB-512-649, Rev-C, Coil Assy Model# 1D13-24-5609F-3.3-H-B
420-WAGB-512-650, Rev-C, Coil Assy Model# 1D14-18-5606F-2.6-H-B
420-WAGB-512-654, Rev-D, Coil Assy Model# 1D22-36-5606F-8.3-H-B
420-WAGB-512-655, Rev-E, Coil Assy Model# 1D16-12-5606F-2-H-B
420-WAGB-512-675, Rev-C, Coil Assy Model# 1D24-42-5604F-10.5-H-B
420-WAGB-512-676, Rev-D, Coil Assy Model# 1D16-42-5604F-7-H-B
420-WAGB-512-677, Rev-D, Coil Assy Model# 1D12-30-5604F-3.8-H-B
420-WAGB-514-015, Rev -, Ship Stores Refrigeration Electrical Drawing
420-WAGB-514-016, Rev A, Ship Stores Refrigeration Condensing Unit
420-WAGB-514-017, Rev -, Ardick Marine Condenser Model NFC-56Q
420-WAGB-514-018, Rev -, Ship Stores Refrigeration Adrick Model ADR-074Q
420-WAGB-524-001, Rev P, Diagram Auxiliary Seawater System
420-WAGB-531-001, REV F, Distilling plant system
420-WAGB-535-001, Rev M, Diagram Steam, Feed & Condensate System
420-WAGB-535-001, REV M, Diagram steam, feed & condensate system
420-WAGB-535-001, Rev-M, Diagram Steam, Feed & Condensate System
420-WAGB-562-001, Rev E, Rudders Units 021 & 022
420-WAGB-568-001, Rev C, Bow Thruster Installation Arrangement and Details
420-WAGB-581-001, Rev -, Anchor Handling Arrangements and Details
420-WAGB-581-501, Rev C, Series 274 Anchor Windlass
420-WAGB-581-502, Rev D, Series 274 Anchor Windlass HPU General Assembly
420-WAGB-581-505, Rev -, Foundation Loads for Anchor Windlass
420-WAGB-581-532, Rev E, 13,200 lb Balanced Fluke Anchor Assy
420-WAGB-581-533, Rev B, Series 274 Anchor Windlass
420-WAGB-581-534, Rev -, Assy Dwg Stud Link Anchor Chain
420-WAGB-581-544, Rev B, Brake Band Assembly Series 274 Anchor Windlass
420-WAGB-581-547, Rev C, Series 274 Anchor Windlass Stroker Linkage Assembly
420-WAGB-581-548, Rev B, Series 274 Anchor Windlass Chain Stripper Assembly
420-WAGB-582-001, Rev E, Mooring, And Towing Arrangement
420-WAGB-582-503, Rev -, Series 353 Capstan Block Diagram
420-WAGB-582-504, Rev -, Series 353 Johnson type Capstan
420-WAGB-582-554, Rev -, General arrangement Series 353 Capstan (no Master)
420-WAGB-582-557, Rev A, Series 353 AFT Mooring Capstan Elementary Diagram
420-WAGB-582-560, Rev -, Series 353 AFT Capstan Operator Console Assembly
420-WAGB-591-521 Remote VDT Console
420-WAGB-591-549 Oceanographic Winch Drives 1 & 2

420-WAGB-591-550 Trawl/Core Winch Drives

420-WAGB-591-551 Overall Block Diagram Science Winch Control Diagram

420-WAGB-593-008, Rev A, Piping Mods GEA Westfalia OWS Install

420-WAGB-631-001, Rev D, Paint Schedule & Corrosion Control

420-WAGB-634-001, Rev C, Deck Covering & Carpet Shed

420-WAGB-635-001, Rev E, Insulation Layouts & Dets

420-WAGB-801-001, Rev K, Booklet of General Drawings

420-WMSL_507_1, Rev C, Valve Label Plates

FL-1204-3, Rev A, Fleet Welded Padeyes and Links

FL-1702-11, Sheave Inspection

FL-2804-022, Rev B, Consolidated Visual ID for Cutters (Vessels 65 ft and Over in Length)

420-WAGB_262_8, Rev C, Diagram Main Motor, Thrust, Line Shaft Bearing Lube Oil Service System

420-WAGB_528_1, Rev F, Diagram of Plumbing & Int. Deck Drain & Vacuum Collection System

420-WAGB_535_1, Rev N, Diagram Steam, Feed & Condensate System

420-WAGB 611-3, Rev G, Misc Deck Sockets

420-WAGB 635-1, Rev D, Insulation Layouts & Dets

420-WAGB 801-1, Rev -, Booklet of General Drawings

COAST GUARD PUBLICATIONS

Surface Forces Logistics Center Standard Specification 0000 (SFLC Std Spec 0000), 2022, General Requirements

Surface Forces Logistics Center Standard Specification 0740 (SFLC Std Spec 0740), 2022, Welding and Allied Processes

Surface Forces Logistics Center Standard Specification 0850 (SFLC Std Spec 0850), 2022, General Requirements for Drawing Preparation

Surface Forces Logistics Center Standard Specification 3020 (SFLC Std Spec 3020), 2022, Overhaul AC Electrical Motors

Surface Forces Logistics Center Standard Specification 3041 (SFLC Std Spec 3041), 2022, Shipboard Electrical Cable Test

Surface Forces Logistics Center Standard Specification 3042 (SFLC Std Spec 3042), 2022, Shipboard Electrical Cable Removal, Relocation, Splice, Repair, and Installation

Surface Forces Logistics Center Standard Specification 3100 (SFLC Std Spec 3100), 2022, Inspect, Test And Recondition AC Synchronous Machines In-Place

Surface Forces Logistics Center Standard Specification 5000 (SFLC Std Spec 5000), 2022, Auxiliary Machine Systems

Surface Forces Logistics Center Standard Specification 5100 (SFLC Std Spec 5100), 2022, Clean Shipboard Ventilation Systems

Surface Forces Logistics Center Standard Specification 5550 (SFLC Std Spec 5550), 2022, Fire Prevention and Response

Surface Forces Logistics Center Standard Specification 6310 (SFLC Std Spec 6310), 2022, Requirements for Preservation of Ship Structures

Surface Forces Logistics Center Standard Specification 6341 (SFLC Std Spec 6341), 2022, Install Interior Deck Covering Systems

Surface Forces Logistics Center Standard Specification 8634 (SFLC Std Spec 8634), 2022, Drydocking

Surface Forces Logistics Center Standard Specification 8635 (SFLC Std Spec 8635), 2022, Temporary Services

Coast Guard Commandant Instruction (COMDTINST) M10360.3 (Series), Coatings and Color Manual

Coast Guard Technical Publication (TP) 5150, 2003, S6161-U4-FSE-010 Grease Interceptor Hood with MGPC-4000-S-2 Control Cabinet.

Coast Guard Technical Publication (TP) 5200, S6220-B4-MMC-010, Compressor, High Pressure Breathing Air, Model K15-E3

Coast Guard Technical Publication (TP) S9555-CH-MMA-010, 2008, AFFF Firefighting Hose Reels – Models NL20MB, NL20M-200B

Coast Guard Technical Publication (TP) 5207, S9555-DM-MMC-010, Fire Extinguishing System, High Pressure Carbon Dioxide

Coast Guard Technical Publication (TP) 5502, 2020, Fire Suppression System - Model WHDR

Coast Guard Technical Publication (TP) 5070B, SWBS 311, NOV 2017, Diesel Engine, Auxiliary Generator (420-WAGB)

Coast Guard Technical Publication (TP) 5162A, 2023, S9517-AY-MMC-010 - Boiler, Oil Fired Auxiliary

Coast Guard Technical Publication (TP) 5243, Nov 2013, SG811-B4-MMC-010 – Crane, Electro-Hydraulic Telescoping Boom – Model TB60-65

Coast Guard Technical Publication (TP) 5244 July 2004, SG811-B5-MMC-010 – Single Articulating Boom Crane – Model K40-55

Coast Guard Technical Publication (TP) 5245, 2022, SG811-C5-MMC-010 - Crane, Primary Telescoping Boom Pedestal Type – Model 100-55

Coast Guard Technical Publication (TP) 5246 July 2004, SG811-B5-MMC-010 – Single Articulating Boom Crane – Model K15-45, s/n 1867

Coast Guard Technical Publication (TP) 5249, SWBS 589, 2003, SG825-A3-MMC-010 - 1000 Lb Capacity Stores Hoist

Coast Guard Technical Publication (TP) CG TP LR-H5-0006-V0 - 6000 Lb Capacity Science Hoist

Coast Guard Technical Publication (TP) 5251, SWBS 589, SG825-AZ-MMC-010 - 600 Lb Capacity Trash Hoist

Coast Guard Technical Publication (TP) 5262, SWBS 591, March 2023, Science Winch, Model 10628 Oceanographic, Model 71217 Trawl/Core Mechanical System & Wire Handling (Volume 1)

Coast Guard Technical Publication (TP) 5263, SWBS 591, Nov 2003, SG813-HP-MMC - Science Winch, Mechanical System & Wire Handling (Volume 2)

Coast Guard Technical Publication (TP) 5264, SWBS 591, Nov 2003, Science Winch, Mechanical System & Wire Handling (Volume 3)

Coast Guard Technical Publication (TP) 5267, Nov 2003, S9593-D5-MMC-010 – Vacuum Sewage System

Coast Guard Technical Publication (TP) 5326, SWBS 589, 15 Oct 2004, Hoist, Shaw-Box Science Van Electric – Series 700

Coast Guard Technical Publication (TP) 5336, 06-NOV-07, The Cranesmart "LMI" System

Coast Guard Technical Publication (TP) 5359, 2023, Boiler Water Management System – Chem Aqua Water Treatment Program

Coast Guard Technical Publication (TP) 5389, SWBS 516, October 2018, Ship's Stores Refrigeration Plant, Type Two – Mdel ADR-074Q – Installation and Operations Manual

Coast Guard Technical Publication (TP) 5391, Apr 2020, Controllers, Centrifugal Separator System – EPC60 Retrofit

Coast Guard Technical Publication (TP) 5502, 2020, Fire Suppression System - Model WHDR

Coast Guard Technical Publication (TP) S9555-CH-MMA-010, 2008, AFFF Firefighting Hose Reels – Models NL20MB, NL20M-200B

Coast Guard Technical Publication (TP) SG825-AY-MMC-010, 2025, Science Hoist

Coast Guard Technical Publication (TP) XXXX, 2023; GEA Westfalia Separator BilgeMaster Clean Design

Coast Guard Technical Publication 0983-LP-014-2010 (TP 0983-LP-014-2010), CHG 1, Jul 1986, Power Supply, Metallic Rectifier, Helicopter, Starting and Servicing

Coast Guard Technical Publication 4668, MIRANDA DAVIT - MODEL MRT 3900 - Installation, operation and maintenance manual

Coast Guard Technical Publication 5078 (TP 5078), SWBS 314, Nov 2003, Control Panel 30 kW Motor Generator Set

Coast Guard Technical Publication 5080 (TP 5080), SWBS 314, Nov 2003, S9314-DK-MMC-010 – Converter, Frequency

Coast Guard Technical Publication 5081 (TP 5081), Nov 2003, SG160-AA-MMC-010 – Control Panel, Transformer / Rectifier

Coast Guard Technical Publication 9233 (TP 9233), Science Winch Drives and Control System, SWBS 591, May 2023

Coast Guard Technical Publication LR-H5-0008-V1 DAVIT WINCH & HPU, RESCUE BOAT (RHIB) – TYPE MRT 3900-BH7800-961045-1 – VOLUME 1

Coast Guard Technical Standard (TS) 591, Rev -, Oceanographic Research Equipment

Surface Forces Logistic Center Technical Standard (SFLC TS) 589, 2020, Cranes

Surface Forces Logistics Center Standard Specification (SFLC Std Spec) 0000, Jan 2022, General Requirements

Surface Forces Logistics Center Standard Specification (SFLC Std Spec) 0740, Jan 2022, Welding and Allied Processes

Surface Forces Logistics Center Standard Specification (SFLC Std Spec) 6310, Jan 2022, Requirements for Preservation of Ship Structures

OTHER REFERENCES

MIL-C-24757, Nov 1990, Cloth, Fiberglass, Coated

Electric Plant Installation Standard Methods for Surface Ships and Submarines, MIL-STD-2003 Series

IEEE Recommended Practice for Electric Installations Aboard Ships, IEEE-STD-45-2002

Shipboard Bonding, Grounding, and Other Techniques for Electromagnetic Compatibility, Electromagnetic Pulse (EMP), and Safety, MIL-STD-1310 (Series)

Optical Fiber Standard Testing Procedure (Multi-Mode Cable) ANSI/TIA/EIA-526-14 (OFSTP-14)

Optical Fiber Test Procedure 7 (Single Mode) ANSI/TIA/EIA-526-7 (OFSTP-7)

Technical Publication TP: E-451-031-B, AN/SPS-50(V) Marine Radar/ARPA – Operator's Quick Reference Guide & Operator's Manual

Technical Publication TP: E-451-032-A, AN/SPS-50(V) Marine Radar/ARPA – Installation Manual

Technical Publication TP: E-410-008, Seawatch-Monitors, Hatteland Display Technical Manual

U.S. Coast Guard Computerized Maintenance System, CP-ELEX, EE-C-RDNT MPC Card

Wilson Walton Ver. 2306, Aquamatic 4 Impressed Current Cathodic Protection Installation and Operation Manual for Power Unit & Remote Display

Rugged Controls RPC-90x Programmable Controller Operations and Maintenance Manual

Amerex Inspection, Maintenance, and Recharge Service manual NO. 13259

National Fire Protection Association standard NFPA-10 (Portable Fire Extinguishers)

US Environmental Protection Agency Method 1664, Feb 1999, N-Hexane Extractable Material and Silica Gel Treated N-Hexane Extractable Material by Extraction and Gravimetry.

TDI T100-V TurboTwin, April 2006, Installation and Operating Manual

TDI TurboFlow Air Regulator, March 2014, Product Sheet

DOD-STD-2187, Aug 1987, Chemical Cleaning of Salt Water Piping Systems

ASTM International (ASTM) D1330, 2004, Standard Specification for Rubber Sheet Gaskets

ASTM International (ASTM) F708, 2022, Standard Practice for Design and Installation of Rigid Pipe Hangers

ASTM Internationals (ASTM) G46, 2018, Standard Guide for Examination and Evaluation of Pitting Corrosion

ASTM Internationals (ASTM) G46-21, 2021, Standard Guide for Examination and Evaluation of Pitting Corrosion

American Society for Nondestructive Testing (ASNT), Recommended Practice No. SNT-TC-1A, 2016, Personnel Qualification and Certification in Nondestructive Testing

American Society for Nondestructive Testing (ASNT), Standard No. ANSI/ASNT CP-189-2016, 2016, ASNT Standard for Qualification and Certification of Nondestructive Testing Personnel

American Society of Mechanical Engineers (ASME) BPVC, 2017, Boiler and Pressure Vessel Code

American Society of Mechanical Engineers (ASME) HST-3, 1999, Performance Standard for Manually Lever Operated Chain Hoist

American Welding Society (AWS) B1.10M/ B1.10, 2016, Guide for Nondestructive Examination of Welds

American Welding Society (AWS) B1.11M/B1.11, 2015, Guide for the Visual Examination of Welds

American Welding Society (AWS) D1.1/D1.1M, 2025, Structural Welding Code – Steel

American Welding Society (AWS) D3.5, 2000, Guide for Steel Hull Welding

American Welding Society, AWS D1.2-96, 1996, Structural Welding Code, Steel

ASME Standard (ASME) B30.17, 2020, Cranes and Monorails (with Underhung Trolley or Bridge)

ASTM International (ASTM) A6/A6M, 2026, Standard Specification for General Requirements for Rolled Structural Steel Bars, Plates, Shapes, and Sheet Piling

Boiler tubes

Code of Federal Regulations (CFR) Title 29, Part 1910, Subpart T, 2023, Commercial Diving Operations

Code of Federal Regulations (CFR) Title 29, Part 1915, Jul 2008, Occupational Safety and Health Standards for Shipyard Employment

Code of Federal Regulations (CFR) Title 29, Part 1915, Subpart E, Sep 2015, Scaffolds, Ladders and Other Working Surfaces

Code of Federal Regulations (CFR) Title 40, 2013, Protection of the Environment

The Society for Protective Coatings (SSPC) Surface Preparation Specification No.1 (SSPC-SP 1), 2004, Solvent Cleaning

The Society for Protective Coatings (SSPC) Surface Preparation Specification No.11 (SSPC-SP 11), 2016, Bare Metal Power Tool Cleaning

The Society for Protective Coatings (SSPC) Surface Preparation Specification No.11 (SSPC-SP 11), 2020, Power Tool Cleaning to Bare Metal

The Society for Protective Coatings (SSPC) Surface Preparation Specification No.3 (SSPC-SP 3), 2004, Power Tool Cleaning

The Society for Protective Coatings (SSPC) Surface Preparation Specification No.3 (SSPC-SP 3), 2024, Power Tool Cleaning

The Society for Protective Coatings (SSPC)/NACE International (NACE) Joint Surface Preparation Standard SSPC-SP 10 (WAB)/NACE WAB-2, 2015, Near-White Metal Wet Abrasive Blast Cleaning

The Society for Protective Coatings (SSPC)/NACE International (NACE) Joint Surface Preparation Standard SSPC-SP 6 (WAB)/NACE WAB-3, 2015, Commercial Wet Abrasive Blast Cleaning

Underwater Ship Husbandry Manuals

NAVSEA 4730/3, 2004, Driver Hull Inspection Data

NAVSEA Drawing 803-1385866, Rev E, Penetration, Bulkhead and Deck

NAVSEA S0600-AA-PRO-170, Rev 2 Change A, 2014, Underwater Ship Husbandry Manual, Chapter 17 Inspections

NAVSEA S9583-AR-MMC-010, VOL 1, Davit, Winch & HPU, Rescue Boat (RHIB)

NAVSEA Technical Publication T9074-AD-GIB-010/1688, (TP 1688), July 2012, Requirements for Fabrication, Welding, and Inspection of Submarine Structure

Rugged Controls RPC-90x Programmable Controller Operations and Maintenance Manual

SAE International (SAE) AMS-STD-595A, 2017, Colors Used in Government Procurement

Society of Automotive Engineers (SAE) J1942-1, 2008, Qualified Hoses for Marine Applications

TDI T100-V TurboTwin, April 2006, Installation and Operating Manual

TDI TurboFlow Air Regulator, March 2014, Product Sheet

NAVSEA Drawing 804-5773931, Rev A, Acoustic & Thermal Insulation For Compartments Installation Details

CONSOLIDATED LIST OF GOVERNMENT-FURNISHED PROPERTY

The following is a list of property, which the Government will furnish. This list supersedes any other material obligations indicated or implied by referenced drawings.

WORK ITEM	MTI	ITEM DESCRIPTION	NSN/PN	QTY	ESTIMATED COST ($/UNIT)
7	N	INTERFACE HARDWARE W/ CABLE KIT	PN: RSI 6000	1 ea.	$3,500
7	Y	DISPLAY UNIT, 19-INCH	PN: JH19T14MMD-AA1-AOAA	1 ea.	5000
7	Y	KEYBOARD, DATA ENTRY	PN: 591-0032	1 ea.	$1,500
7	Y	TRACKBALL, DATA ENTRY	PN: 610-0032	1.ea.	$1,000
7	Y	DISPLAY UNIT, 15-INCH	PN: JH15T17MMD-AA1-AAAA	1 ea.	2200
7	N	RADAR CONNECTION CABLE, (10 M)	PN: RW-00136	1 ea.	$1,800
7	N	KVM EXTENDER OVER CAT/FIBER	PN: KVXHP-100	1 pair	$3,000
7	N	POWER ADAPTER, 12 VDC, 3A	PN: KVM-12VDC3A	1 ea.	200
7	N	MAGNETRON, X-BAND	000-140-762	1ea	$700
8	Y	Power Supply Unit, 300 Amp	N/A	6	25250
8	Y	Remote Administrative Display (RAD)	N/A	2	$3,500
14	N	Twin turbo starter	T112-60031-01R-103	1	
14	N	Pressure Regulator	3-30327-001	1	3200
15	N		PN: 19-TMCH-20	2	$3,000
15	N	Valves , #64 In-Line Valve (Plain Closing)	PN: #64	4	$500
19	N	Sheave Assembly, Item 7, Figure 10-25, TP 5243	PN: 14-10A-5/8	2 ea.	5000
25	N	Lobe (Figure 7-14-19)	P/N: 14-3098-UNLobe	3	$23,839
29	N	2" Type A Deck Drain, Bronze with Carbon Steel Ring, Cast Drain - Drawing 810-1385789 Rev. F	D307A205	1	$1,300
30	N	VALVE, VACUUM BREAKER, 3" NPS 125# ANSI B16.6 FLANGE CONNECTION, GLOBE STYLE HIGH FLOW TYPE, 80 SCFM PER SECOND, WITH AIR RELEASE VALVE, 260 SCFM NOMINAL, ASTM	18U03-4FO-DBY	2	7967

		A536 DUCTILE IRON BODY WITH FUSION BONDED EPOXY COATING, SILICON BRAZE INTERNALS			
30	N	"3-way" for A/C's. METREXMISC EAMDF3120BMF3WTA420 3" 3-WAY MARINE ELECTRIC ACTUATED	EAMDF3120BMF3WTA420	8	$32,798
30	N	"3-way" for Reefers. DPB-E1L-A10L13--W955, DP = Industrial Diverter Port ball valve	DPB-E1L-A10L13--W955	6	$6,530
30	N	SPN-K5L-J--S Industrial 2-way 3-piece ball valve, Adjust-O-Seal®, live loaded stem packing	SPN-K5L-J—S	2	5726
30	N	"SPN1J5U-J--S, Industrial 2-way 3-piece ball valve, Adjust-O-Seal®, live loaded stem packing"	SPN1J5U-J--S	26	$5,879
30	N	SPN-E5S-J--S Industrial 2-way 3-piece ball valve, Adjust-O-Seal®, live loaded stem packing	SPN-E5S-J—S	12	$1,366
30	N	SPN-F5S-J--S Industrial 2-way 3-piece ball valve, Adjust-O-Seal®, live loaded stem packing	SPN-F5S-J—S	5	2087
30	N	"MILWAUKEE VALVE FIGURE 1041, VALVE, GLOBE, 2-1/2" NPS, ANSI B16.5 150# FLAT FACE, BRONZE BODY, NI-CU ALLOY INTERNALS, NAVSEA 803-1385541, MATERIAL: ALUM BRONZE ASTM B-148"	803-13855451	9	$7,308
30	N	MILWAUKEE VALVE FIGURE 161A VALVE, GLOBE, 1" NPS, UNION END, BRONZE BODY, NI-CU ALLOY INTERNALS, NAVSEA 803-4384536, MATERIAL: ALUM BRONZE ASTM B-148	803-4384536	5	$844
30	N	"MILWAUKEE VALVE FIGURE 1146)VALVE, GATE, 1/2" NPS, SIL-BRZ	803-4385714	11	692.31

		UNION END X 1/2" FPT, 400 PSI WOG, NON-RISING STEM, THREADED BONNET, NITRILE O-RING, SOLID WEDGE, NAVSEA DWG 803-1385714, MATERIAL: BRONZE ASTM B-61"			
31	N	VALVE, GATE, 4" NPS, HASTELLOY BODY, 150# ANSI FLANGED, CW-12MW OBTU./N10276 STEM, A494 CW-12MW BACK SEAT & BODY SEAT. (LADISH VALVES DWG# : 8275-1201-GG01-A40C	8275-1201-GG01-A40C	5	$14,175
32	Y	Hydraulic Cylinder, Aft A frame	3040-01-458-3253	2	$24,025
32	Y	Hydraulic Cylinder, Stbd A frame	3040-01-458-3238	2	9177
35	N	Spirax Sarco Universal Connector, Model PC20, ½" IPS with blowdown	67980	18	$497
35	N	Spirax Sarco Model UFT32-4.5 Universal Float & Thermostatic Steam Trap, Stainless Steel, PMO65 PSI	1465300	12	$1,187
35	N	Spirax Sarco Model UBP32 Universal Balanced Pressure Thermostatic Steam Trap, Stainless Steel, with Near to Steam Capsule 7F PMO 464 PSI	1270900	6	574
35	N	Spirax Sarco Model VB-VS Combination Vacuum Breaker Balanced Pressure Air Vent 1/2" NPT	72147	1	$783
36	N	ASCO 3-Way Solenoid Valve 3-Way Diverting, 1" 150# flanges, bronze body, seating PTFE, 115 VAC/60 Hz operation in a NEMA 4 enclosure	AV182430-1	3	$20,000
39	Y	SHEAVE , GALV W/CIP	B-4838	22 Ea.	1700
39	Y	SPRING LOADED SHEAVE	D-13898	2 Ea.	$16,000
39	N	KEEPER PLATE		20	$40
39	N	KEEPER PLATE	D-13898-21	20	20
39	N	PIN, WELDED	D-13898-6	20	$800

40	N	7/8” Sheave assembly	240909	3	$3,262
40	N	5/8” Sheaves Assembly	240912	1	2624
40	N	Sheave Assembly	44575	1	$597
40	N	Fast Winch Certified Hardware	240916	1	$11,196
40		PIN WLDMT	44571	1	1106
42	N	Sheave Assy	240909	3 ea	$3,262
42	N	Sheave Assy	240910	2 ea	$12,552
42	N	Pin, Certified WLDMT	42865	4 ea	1777
43	N	Sheave Assy	240909	3 ea	$3,262
43	N	Sheave Assy	240910	2 ea	
43	N	Pin, Certified WLDMT	42865	4 ea	1777
50	N	Coast Guard Emblem Vinyl Kit	N/A	2 ea.	$2,000

***Government-loaned property, which shall be returned to the vessel upon completion of the availability.**
****New or refurbished equipment that the Government may provide for installation in place of existing equipment.**
*****Government-furnished property, which is to be supplied by either the vessel or the C4IT ServiceCenter**

CONSOLIDATED LIST OF CRITICAL INSPECTION ITEMS

The following is a list of work items, which contain Critical Inspection reports, which the Contractor must complete within the first 25% of the availability contract period (see SFLC Std Spec 0000, paragraph 3.2.6.5 (Inspection report particulars)):

Work Item	Title
5	Recapitalize Science Data Network Infrastructure (SLEP)
6	Recapitalize CGOne Network Infrastructure (SLEP)
7	Recapitalize Ice Radar (SLEP)
9	Oceanographic Winch, Inspect and Test
10	Scientific and Ocean Engineering Systems, Control System Groom and Indicator Calibration
15	Boiler Tube Sheet and Gauge Glass, Replace (SLEP)
18	Boiler, Annual Maintenance
19	Bow Crane, Biennial Inspect and Test
20	Internal Hoists, Maintenance, Inspection and Test
21	Grey Water Holding Tank(s), Clean and Inspect
23	Sewage Holding Tank(s), Clean and Inspect
32	A-Frames, Inspect and Repair
33	Science Van Monorail System, Overhaul
39	Port & Starboard Miranda Davit, Biennial Inspect and Repair
40	Aft Crane (Starboard), Biennial maintenance, Inspect and Repair
41	Aft Articulating Crane (Port), Annual maintenance, Inspect and Repair
42	Deck Crane (Starboard), TB 100-55, Annual maintenance, Inspect and Repair
43	Deck Crane (Port), TB 100-55, Bi-Annual maintenance, Inspect and Repair
44	Trawl / Core Winch, Inspect and Test
45	Decks (Interior), Preserve
47	Deck Covering (Slip-Resistant) Forecastle Deck, Renew

PRINCIPAL CHARACTERISTICS

420' WAGB (CGC HEALY)	
PHYSICAL	
Length overall	420'
Length between perpendiculars	396' 6"
Beam, extreme	82' 0"
Depth amidships to main deck	42' 0"
Draft to bottom of keel @ full load	29' 3"
Full load displacement	16,423 long tons
Effective keel length	230' 0"
Mast height above DWL @ 28' draft	158' 3/8"
HULL	
Frame spacing	30"
Material	
Hull	ASTM A131, GR EH 36, or ABS EH 36
Flight deck	ASTM A131, GR EH 36, or ABS EH 36
Superstructure	ASTM A131, GR EH 36, or ABS EH 36
MACHINERY	
Propulsion	4 Sultzer 12Z a V 40S 2 AC Synchronous, 11.2MW Drive Motors
Auxilary generator	1 EMD 16-645F7B, 2200 KW, 450V AC, 3 phase
Rudder	2
Anchor & chain	Two 13,200 lbs Navy Stockless, 150 fathoms chain Port, 165 fathoms chain Starboard
TANKS	
Diesel oil or JP-5 (@ 95%)	1,187,117 gal.
JP-5 (Helo) (@ 95%)	56,434 gal.
9250 lube oil (@ 95%)	24,794 gal.
Fresh water (@ 95%)	34,553 gal.
Hydraulic oil (@95%)	8,571 gal.
Ballast water (@95%)	899,776 gal.

General Requirements

1. SCOPE

1.1 Intent. This standard specification invokes general requirements for conducting vessel repairs performed by commercial contractors at a Coast Guard facility for Coast Guard vessels.

1.2 Term interchangeability. The terms 'Contractor', 'CG Yard', 'NAVSTA EVERETT', 'shipyard', 'Base', and 'Coast Guard Industrial' are used interchangeably in this specification. Where the primary service provider is Coast Guard personnel, references to contractor and other noted descriptors within this specification or within drawings, publications, SFLC Standard Specifications or other commercial and military references are deemed the same as prime service provider.

2. REFERENCES

COAST GUARD DRAWINGS

None.

COAST GUARD PUBLICATIONS

Coast Guard Commandant Instruction (COMDTINST) M10360.3 (series), Coatings and Color Manual

Surface Forces Logistics Center Standard Specification 0000 (SFLC Std Spec 0000), Latest Version, General Requirements

Surface Forces Logistics Center Standard Specification 0740 (SFLC Std Spec 0740), Latest Version, Welding and Allied Processes

Surface Forces Logistics Center Standard Specification 5550 (SFLC Std Spec 5550), Latest Version,

Fire Prevention and Response

Surface Forces Logistics Center Standard Specification 6310 (SFLC Std Spec 6310), Latest Version, Requirements for Preservation of Ship Structures

OTHER REFERENCES

Code of Federal Regulations (CFR) Title 29, Part 1915, Occupational Safety and Health Standards for Shipyard Employment

NAVSEA Technical Publication T9074-AD-GIB-010/1688, (TP 1688), July 2012, Requirements for Fabrication, Welding, and Inspection of Submarine Structure

3. REQUIREMENTS

3.1 General. The Contractor must conform to all requirements specified in SFLC Std Spec 0000 and in this item, as applicable, during the performance of this availability. The requirements in this WI applies to all work under the scope of this contract, whether explicitly stated in all following work items or not, and to all other work subsequently authorized by changes, modifications, or extensions to the contract.

3.1.1 The Contractor must conform to all requirements specified in SFLC Std Spec 5550 and in the Fire Protection and Response work item, as applicable, during the performance of this availability.

3.1.1.1 Fire Safety Plan submission. The Contractor must submit a copy of the CFR 1915, Subpart P, Fire Safety Plan with the Contractor's bid when work will be conducted in a Contractor–owned facility. Include any MOA(s) with local firefighting facilities.

3.1.1.2 Fire Plan submission. The Contractor must submit a copy of the developed availability specific fire plan as requested in Work Item 1: Fire Prevention, Provide, with the Contractor's bid.

3.2 Contractor-provided fire watch personnel. The Contractor must provide fire watch personnel and equipment.

3.3 Preservation requirements. The Contractor must accomplish all preservation tasks, including touch-ups, in accordance with SFLC Std Spec 6310.

3.3.1 Coatings. Ensure that all contractor-furnished coatings are in accordance with SFLC Std Spec 6310, Appendix C (Authorized Coatings for Use on Cutters and Boats).

3.3.2 Coating colors and system color schemes. The Contractor must obtain a written COR authorization to deviate from any coatings required in SFLC Std Spec 6310 Appendix C before work.

3.3.3 In-process quality control measures. The Contractor must abide by all the safety, preservation, and quality control requirements specified in SFLC Std Spec 0000, paragraph 3.2.4.2 (In-process QC measures for "critical-coated surfaces").

3.3.3.1 Quality control requirements. The Contractor must abide by the following when performing preservation related inspections. The following measurements must be randomly spaced throughout for the purposes of providing a representation of the entire prepared or coated surface.

3.3.3.1.1 Surface profile measurements. One surface profile measurement must be taken for every 200 square feet for the first 1000 square feet; for each additional 500 square feet or less, one profile measurement must be taken. Profile measurements must be taken in accordance with SFLC Std Spec 6310, paragraph 3.1.8.3 (Surface profile measurements). A "measurement" for surface profile is defined as follows:

- ASTM D4417, Method B: One profile measurement is the average (mean) of 10 individual readings.
- ASTM D4417, Method C: One profile measurement is the average (mean) of 2 individual readings.

3.3.3.1.2 Soluble salt conductivity measurements. 5 conductivity measurements must be taken every 1000 square feet. For submerged (immersed) applications conductivity measurements must not exceed 30 microsiemens/cm. For non-submerged (non-immersed) applications conductivity measurements must not exceed 70 microsiemens/cm. If a conductivity check fails, clean the surface in accordance with SFLC Std Spec 6310, paragraph 3.1.8.5 (Soluble salt removal).

3.3.3.1.3 Coating thickness measurements. Three area measurements must be taken for the first 1000 square feet; for each additional 1000 square feet, perform an additional area measurement. A "measurement" for coating thickness is defined as follows:

- SSPC-PA 2 defines an area measurement as 5 separate spot measurements randomly spaced throughout a 100 square foot area.
    - SSPC-PA 2 defines a spot measurement as 3 gage readings and each new gage reading the probe must be moved to a new location within a 1.5-inch diameter circle defining the spot.

3.4 Welding and brazing requirements. The Contractor must perform all welding and allied processes, and NDE in accordance with SFLC Std Spec 0740.

NOTE

NAVSEA approval is NOT required for welding procedures submitted but the procedures must be reviewed and shown to satisfy the requirements set forth in NAVSEA TP 1688, by a welding regulatory agency. The requirements for welding Strenx 900 are considered the same as those for welding HY-130.

3.5 Environmental protection requirements. The Contractor must adhere to the following environmental protection requirements in accordance with the SFLC Stand Spec 0000:

3.5.1 USCG facilities. The Contractor must provide and maintain environmental protection as defined in SFLC Std Spec 0000 Appendix B, Requirements for Environmental Protection at USCG Facilities, during the performance of this availability. Contractor must plan for and provide environmental protective measures to control pollution that develops during normal practice, as well as plan for and provide environmental protective measures required to correct conditions that develop during the project. Contractor must comply with applicable Federal, state, and local laws, codes, ordinances, and regulations in their entirety. Any reference to a specific portion of a Federal, state, or local law, code, ordinance, or regulation in this or any other item must not be construed to mean that relief is provided from any other sections of the law, code, ordinance, or regulation.

3.5.1.1 USCG Generator status. The activity Generator Status for the Coast Guard Facility is Large Quantity Generator (LQG).

3.5.1.2 Plans and permits. The CG Facility has unit specific permits including the following:

- Spill Prevention Control and Countermeasures (SPCC) Plan: Unit has a SPCC Plan which requires certain unit-specific procedures be followed for the storage, inspection, and transfer of petroleum products in containers 55 gallons or greater.
- National Pollutant Discharge Elimination System (NPDES) Storm Water (SW) Permit: Unit has an NPDES SW permit which requires unit-specific procedures be followed for the storage and inspection of equipment and materials which may contribute contaminants to storm water discharges.
- Air Emission Permit: Unit has an Air Emission Permit which requires unit-specific procedures be followed for the emissions of VOCs and hazardous air pollutants.

3.5.2 Test and procedures. The Contractor is required to promptly conduct tests and procedures for the purpose of assessing whether operations are in compliance with applicable Environmental Laws. Analytical work must be done by qualified laboratories; and where required by law, the laboratories must be certified.

3.5.3 Regulatory notifications. The Contractor is responsible for all regulatory notification requirements in accordance with Federal, State and local regulations. In cases where the Coast Guard must also provide public notification, such as storm water permitting, the Contractor must coordinate with the COR, and if work is being performed at a USCG Facility, the local Facility Engineer or Engineering Officer. The Contractor must submit copies of all regulatory notifications to the COR and the local Facility Engineer or Engineering Officer prior to commencement of work activities. Regulatory notifications must be provided for including but not limited to demolition, renovation, National Pollutant Discharge Elimination System (NPDES) defined site work, and remediation of controlled substances such as asbestos, hazardous waste, and lead paint.

3.5.4 Environmental manager. The Contractor must appoint in writing an Environmental Manager for the project, who is responsible for coordinating Contractor compliance with Federal, State, local, and station environmental requirements. The Environmental Manager must ensure compliance with Hazardous Waste Program requirements, including hazardous waste handling, storage, manifesting, and disposal; implement the Contractors' Environmental Management Plan; ensure that all environmental permits are obtained, maintained, and closed out; ensure compliance with Storm Water Program Management requirements; ensure compliance with Hazardous Materials including storage, handling, and reporting requirements; as well as coordinate any remediation of regulated substances such as lead, asbestos, and polychlorinated biphenyl (PCB). This may be a collateral position; however the individual must be trained to accomplish the following duties; ensure waste segregation and storage compatibility requirements are met; inspect and manage Satellite Accumulation areas; ensure only authorized personnel add wastes to containers; ensure all Contractor personnel are trained in 40 CFR requirements and individual position requirements; coordinate removal of waste containers; and maintain the Environmental Records binder and required documentation, including environmental permits compliance and close-out.

3.5.5 HW disposal. Contractor must comply with SFLC Std Spec 0000 Appendix B, Requirements For Environmental Protection At USCG Facilities for HW disposal, and ensure that waste removals are conducted during normal business hours (0800-1600) on Monday through Friday (excluding holidays).

3.5.6 Additional Requirements. The Contractor must be aware of the following:

3.5.6.1 No Contractor or Subcontractor must have the authority to sign a Hazardous Waste Manifest using the Coast Guard facility's EPA Generator ID Number or remove contract generated hazardous waste from the Coast Guard facility without COR approval.

3.5.6.2 Local environmental regulations at the Government facilities may be more stringent. As with all environmental regulations, the Contractor must prepare for and comply with local and state regulations.

3.5.6.3 Coast Guard facilities do not maintain Facilities Response Plans (FRPs) per 33 CFR 154. Contractor must furnish the FRP when required for over-the-water liquids transfers to and from vessels, and is required for oil/fuel transfers to/from vessels for 250 barrels (10,500 gallons) or more.

3.6 Local Policy. The Contractor must refer to site (e.g., Base) Regulations and Instructions for details regarding local policies (e.g., crane services, parking, or facility usage).

3.7 SFLC Standard Specification approved changes. Approved updates to the 2022 SFLC Standard Specifications will appear here.

3.7.1 SFLC Standard Specification 5550: Replace paragraph 3.11.3 to state, "Material supporting imminent work shall be brought on the cutter and stored where the work is being performed. Material that appreciably contributes to fire load shall be removed at the end of each work shift when personnel are not present. Trash, debris, and packaging materials shall be promptly removed from the vessel at the end of each work shift and not allowed to accumulate." Advance the paragraph numbering of the Fire Prevention and Safety Inspection form to 3.11.4.

4. NOTES

4.1 QA inspection forms. QA inspection forms (QA-1 thru QA-5), required in SFLC Std Spec 6310 to be completed and submitted during preservation of "critical-coated surfaces", are provided at the end of this document.

USCGC HEALY (WAGB-420) DOCKSIDE AVAILABILITY FY2027

QA-1 - QUALITY ASSURANCE INSPECTION FORM

(PRESERVATION CHECKLIST)

VESSEL NAME	HULL #	WORK ITEM #	WORK ITEM TITLE
LOCATION OF WORK (INCL. FRAME #'S)			**AREA (SQFT)**

CHECKPOINT 1 – COATING SYSTEM COMPLIANCE	
	Ensure all coatings are in compliance with SFLC Std Spec 6310, Appendix C.
CHECKPOINT 2 - PAINT STORAGE	
	Ensure all coatings are kept at a temperature of 65 to 85°F at all times, unless otherwise specified by the coating mfg.
CHECKPOINT 3 - AMBIENT CONDITIONS	
	Ensure surface and surrounding temperatures are each between 50 and 90°F for water-containing coatings, and 35 and 95°F for other coatings, unless otherwise specified by the coating manufacturer(s).
	Ensure maximum relative humidity (RH) is as follows, from surface preparations through final curing of topcoat: 50% for tanks, voids, and vent plenum; and 85% for all other areas, unless otherwise specified by manufacturer(s).
	Ensure surface temperature is at least 5°F above the dew point, unless otherwise specified by the coating mfg.
CHECKPOINT 4 - PRE-SURFACE PREPARATION	
	Remove surface contaminants (soluble salts, loose rust, mud, and marine growth) with low pressure fresh water wash down (maximum 5,000 psi). If oil and grease are present, perform solvent cleaning, as per SSPC SP-1.
	Verify equipment setup, blast media, and surface preparation methods match designated test coupon.
CHECKPOINT 5 - SURFACE PREPARATION	
	Verify environmental conditions (see CHECKPOINT 3).
	Ensure cleanliness of prepared surface is as per specification (i.e.: SSPC SP-11, SP-10, SP WJ-2…).
	Verify surface anchor profile using ASTM D4417-Methods B or C against SFLC Std Spec 6310. Conduct profile readings at a minimum of 5 locations for the first 1000-sqft area, and 2 locations for each succeeding 1000-sqft area.
	Measure soluble salt conductivity in accordance with SSPC-Guide 15. Conduct 5 measurements per each 1000-sqft area (max. threshold: 70 microsiemens/cm for non-submerged surfaces, 30 microsiemens/cm for submerged surfaces).
CHECKPOINT 6 - PRIMER COAT APPLICATION	
	Verify environmental conditions (see CHECKPOINT 3).
	Verify proper mixing and stand-in (induction) times.
	Ensure no paint is applied when the temperature is expected to drop to freezing before the paint has dried.
	Ensure surfaces are completely dry, unless otherwise allowed by the coating manufacturer(s).
	Verify wet film thickness (WFT) at random, to prevent under or over application. Verify final DFT.
	Brush out all runs, sags, drips, and puddles.
	Perform visual inspection for holidays and other defects.
CHECKPOINT 7 – STRIPE COAT APPLICATION	
	Verify environmental conditions (see CHECKPOINT 3).
	Ensure overcoating window is as per manufacturer's instructions.
	After primer coat (mist coat after inorganic zinc), brush-apply un-thinned coat of same primer paint over edges, weld seams, cut-outs, and areas of complex geometries @ 3-4 mils wet film thickness (WFT).
CHECKPOINT 8 – TOP COAT APPLICATION	
	Verify environmental conditions (see CHECKPOINT 3).
	Ensure overcoating window is as per manufacturer's instructions.
	Verify proper mixing and stand-in (induction) times, as applicable.
	Verify wet film thickness at random, to prevent under or over application.
	Brush out all runs, sags, drips, and puddles.
CHECKPOINT 9 – FINAL INSPECTION	
	Verify final system dry film thickness. Conduct 5 sets of 3 readings for each of the first 3 100-sqft areas, followed by 5 sets of 3 readings for each succeeding 1000-sqft area.
	Ensure that system cure is in accordance with manufacturer's recommendation for intended service.
	Ensure potable water tank exhaust ventilation is maintained continuously from and during coating application through final system cure, to exhaust all solvent to the atmosphere and to prevent solvent entrapment.
	For immersion coatings (including tank U/W body), record date and time of the following events: Final coat application: / ; Return to service or removal from environment controls: /
CHECKPOINT 10 – RECORD KEEPING	
	Complete, sign, and submit all provided QA Inspection Forms.

NAME OF QP-1/AMPP INSPECTOR	SIGNATURE	CERT. #	DATE / TIME
NAME OF CG REPRESENTATIVE	**SIGNATURE**	**UNIT**	**DATE/TIME**

QA-2 - QUALITY ASSURANCE INSPECTION FORM
(ENVIRONMENTAL READINGS)

VESSEL NAME	HULL #	WORK ITEM #	WORK ITEM TITLE

Use one sheet for each activity. Record conditions every four hours from before surface preparation to application of final coating system coat.

DATE & TIME	ACTIVITY (SURFACE PREPARATION, PRIMER COAT, BARRIER COAT, TOP COAT, ETC…)	LOCATION (FRAME & DECK, RELATION TO EQUIPMENT, ETC.)	TEMPERATURE				% REL. HUMID-ITY
			DEW PT.	SURFACE	AMBIENT	ΔT | DP - SURFACE |	

NAME OF QP-1/AMPP INSPECTOR	SIGNATURE	CERT. #	DATE / TIME
NAME OF CG REPRESENTATIVE	**SIGNATURE**	**UNIT**	**DATE/TIME**

QA-3a - QUALITY ASSURANCE INSPECTION FORM
(SURFACE PROFILE LOG FOR PROFILE MEASUREMENTS IAW ASTM D4417-METHOD-C)

VESSEL NAME	HULL #	WORK ITEM #	WORK ITEM TITLE
LOCATION OF WORK (FRAME REFERENCES)			**AREA (SQFT)**

SURFACE PREPARATION METHOD		PROFILE ACHIEVED (MILS)		
		MIN	MAX	MEAN
SSPC-SP-10/AMPP No. 2	☐			
SSPC-SP WJ-2/AMPP WJ-2	☐			
SSPC-SP-3	☐			
SSPC-SP-11	☐			
SSPC-SP-11 (inaccessible area)	☐			
Brush-blasting (non-metallic substrate)	☐			
ABRASIVE MANUFACTURER:		**ABRASIVE SIEVE SIZE:**		

PLACE SURFACE PROFILE REPLICA TAPES IN THE SPACES PROVIDED BELOW, TO SERVE AS PERMANENT QA RECORD. MAINTAIN A SEPARATE LOG FOR EACH LOCATION. WHEN AN AREA IS DIVIDED INTO SEPARATE SECTIONS, MAINTAIN A SEPARATE LOG FOR EACH SECTION.		
Place Surface Profile Replica Tape Here	Place Surface Profile Replica Tape Here	Place Surface Profile Replica Tape Here
Reading (mils):	Reading (mils):	Reading (mils):
Place Surface Profile Replica Tape Here	Place Surface Profile Replica Tape Here	Place Surface Profile Replica Tape Here
Reading (mils):	Reading (mils):	Reading (mils):
Place Surface Profile Replica Tape Here	Place Surface Profile Replica Tape Here	Place Surface Profile Replica Tape Here
Reading (mils):	Reading (mils):	Reading (mils):
Place Surface Profile Replica Tape Here	Place Surface Profile Replica Tape Here	Place Surface Profile Replica Tape Here
Reading (mils):	Reading (mils):	Reading (mils):
Place Surface Profile Replica Tape Here	Place Surface Profile Replica Tape Here	Place Surface Profile Replica Tape Here
Reading (mils):	Reading (mils):	Reading (mils):
MEAN MIL READING (IAW ASTM D4417-METHOD C) FOR ABOVE 15 READINGS:		

NAME OF QP-1/AMPP INSPECTOR	SIGNATURE	CERT. #	DATE / TIME
NAME OF CG REPRESENTATIVE	**SIGNATURE**	**UNIT**	**DATE/TIME**

QA-3b - QUALITY ASSURANCE INSPECTION FORM
(SURFACE PROFILE LOG FOR PROFILE MEASUREMENTS IAW ASTM D4417-METHOD-B)

VESSEL NAME	HULL #	WORK ITEM #	WORK ITEM TITLE
LOCATION OF WORK (INCL. FRAME #'S)			**AREA (SQFT)**

SURFACE PREPARATION METHOD		PROFILE ACHIEVED (MILS)		
		MIN	MAX	MEAN
SSPC-SP-10/AMPP No. 2	☐			
SSPC-SP WJ-2/AMPP WJ-2	☐			
SSPC-SP-3	☐			
SSPC-SP-11	☐			
SSPC-SP-11 (inaccessible area)	☐			
Brush-blasting (non-metallic substrate)	☐			
ABRASIVE MANUFACTURER:		**ABRASIVE SIEVE SIZE:**		

RECORD MEASUREMENTS TAKEN IN THE SPACES PROVIDED BELOW, TO SERVE AS PERMANENT QA RECORD. MAINTAIN SEPARATE LOG FOR EACH LOCATION. WHEN AN AREA IS DIVIDED INTO SEPARATE SECTIONS, MAINTAIN A SEPARATE LOG FOR EACH SECTION.					
Reading (mils):					
Reading (mils):					
Reading (mils):					
Reading (mils):					
Reading (mils):					
Reading (mils):					
Reading (mils):					
Reading (mils):					
Reading (mils):					
Reading (mils):					
Mean Mils Reading (IAW ASTM D4417-Method B for above 10 readings (by column):					
Mean Reading (mils)					

NAME OF QP-1/AMPP INSPECTOR	SIGNATURE	CERT. #	DATE / TIME
NAME OF CG REPRESENTATIVE	**SIGNATURE**	**UNIT**	**DATE/TIME**

QA-4 - QUALITY ASSURANCE INSPECTION FORM
(SURFACE SOLUBLE SALT CONDUCTIVITY LOG)

VESSEL NAME	HULL #	WORK ITEM #	WORK ITEM TITLE
LOCATION OF WORK (INCL. FRAME #'S)			AREA (SQFT)

SOLUBLE SALT CONDUCTIVITY MEASUREMENTS IAW SSPC-GUIDE 15.		
DATE	TEST LOCATIONS	CONDUCTIVITY (MICROSIEMENS/CM)

NAME OF QP-1/AMPP INSPECTOR	SIGNATURE	CERT. #	DATE / TIME
NAME OF CG REPRESENTATIVE	SIGNATURE	UNIT	DATE/TIME

QA-5 - QUALITY ASSURANCE DATA FORM
(COATING THICKNESS)

(Use one sheet for each sequence)

VESSEL NAME	HULL #	WORK ITEM #	WORK ITEM TITLE

COATING MFG	PRODUCT NAME	BATCH #	INDUCTION TIME	COATING SYSTEM SEQUENCE (PRIMER/TOUCHUP/3RD COAT, ETC.)

DRY FILM THICKNESS (DFT) MEASUREMENTS IAW SSPC-PA 2.						
SPOT	1	2	3	4	5	AVERAGE VALUE
*BASE METAL READING (BMR)						
*Required, If Magnetic Pull-Off (Type I/Banana) Gauge Is Used.						

LOCATION (FRAME REFERENCE):								
SPOT	1	2	3	4	5	OVERALL AVG. DFT	ADJUSTMENTS	
1							AVG. BMR	DEVIATION
2								
3						BEFORE ADJUSTMENTS	AFTER ADJUSTMENTS	
AVG.								
LOCATION (FRAME REFERENCE):								
SPOT	1	2	3	4	5	OVERALL AVG. DFT	ADJUSTMENTS	
1							AVG. BMR	DEVIATION
2								
3						BEFORE ADJUSTMENTS	AFTER ADJUSTMENTS	
AVG.								
LOCATION (FRAME REFERENCE):								
SPOT	1	2	3	4	5	OVERALL AVG. DFT	ADJUSTMENTS	
1							AVG. BMR	DEVIATION
2								
3						BEFORE ADJUSTMENTS	AFTER ADJUSTMENTS	
AVG.								

APPLICATION METHOD (AIRLESS, CONVENTIONAL SPRAY, ROLLED)	AVERAGE DFT

NAME OF QP-1/AMPP INSPECTOR	SIGNATURE	CERT. #	DATE / TIME
NAME OF CG REPRESENTATIVE	SIGNATURE	UNIT	DATE/TIME

4.2 Tank and Void Assessment form.

SFLC-ESD-25	TANK AND VOID ASSESSMENT FORM
PRINT RESET	

GENERAL DATA	Note: Use SFLC-ESD-29 for Compartments other than Tanks & Voids.		
Inspector's Name:	Organization:	Contact Info:	
Cutter Name:	Cutter Class:	Hull:	
Tank:	Service:	Tank Area:	Gallons:
Solid Balast:	Access Compt:	Date:	Assessment Reason:

ACCESS DATA	
Manhole and cover condition:	Tank Penetration Condition:

VENT OVERFLOW DATA		
Present: ◯Yes ◯ No	Check Valve Installed:◯Yes ◯No	Check Valve Operates Properly:◯Yes ◯No

LADDER DATA		
NR of Ladder(s) Present: ◯Yes ◯No	Ladder Damaged:◯Yes ◯No	Ladder Material:

TANK LEVEL INDICATOR (TLI) DATA		
TLI Present in Tank: ◯Yes ◯No	TLI Damaged: ◯Yes ◯No	TLI Type:

SOUNDING TUBE DATA	
Sounding Tube Present in Tank: ◯Yes ◯No	Sounding Tube Damaged: ◯Yes ◯No
Striker Plate Damaged (>50%): ◯Yes ◯No	

CATHODIC PROTECTION DATA		
Cathodic Protection in Tank:◯Yes ◯No	Total Zincs:	Number of Zincs > 50% Depleted:

	1-6		Cleanliness & Housekeeping
Clean to light layer or residue		1-2 (G)	Comments:
Loose accumulation scale		3-4 (Y)	
Impending residue and sediments		5-6 (R)	

	%	1-6		Coating Systems
All Painted Surfaces			1-2 (G)	Comments:
			3-4 (Y)	
			5-6 (R)	

	%	1-6		Structural
Corrosion			1-2 (G)	Comments:
			3-4 (Y)	
			5-6 (R)	
Pitting & Grooving			1-2 (G)	Comments:
			3-4 (Y)	
			5-6 (R)	

Page 1 of 2 18MAR2015

SFLC-ESD-25	TANK AND VOID ASSESSMENT SHEET
PRINT	

Structural Integrity Data					
Estimated Total Linear Feet of Structure Requiring Repair:			Estimated Total Square Feet of Plating Requiring Repair:		
Cracks/ Fractures Present:	◯ Yes	◯ No	Buckling/Deflections/ Distortions Present:	◯ Yes	◯ No
Holes Present:	◯ Yes	◯ No	Material Wastage Present:	◯ Yes	◯ No
All Welds Intact:	◯ Yes	◯ No	Structural Evaluation Recommended:	◯ Yes	◯ No

PHOTOGRAPHS

Pictures Taken (enter quantity):

Note: To add pictures to this form, Work Station must have Adobe Acrobat (not Reader) installed.
Add all photos and photo comments to a word document and save file. Open this form and click "Combine Files". Add the document with photos you've just saved and save as a new combined .pdf files.

Additional Comments:

Page 2 of 2 18MAR2015

WORK ITEM 1: Fire Prevention, Provide

1. SCOPE

1.1 Intent. This work item describes the requirements for the Contractor to provide a fire plan, discuss fire safety procedures, maintain fire boundaries and fittings, conduct inspections and keep firefighting systems in a ready condition to address fires.

1.2 Government-furnished property.

None.

2. REFERENCES

COAST GUARD DRAWINGS

None

COAST GUARD PUBLICATIONS

Surface Forces Logistics Center Standard Specification 5550 (SFLC Std Spec 5550), 2022, Fire Prevention and Response

OTHER REFERENCES

MIL-C-24757, Nov 1990, Cloth, Fiberglass, Coated

3. REQUIREMENTS

3.1 Fire Plan. The Contractor must develop and implement a written fire plan in accordance with Paragraph 3.1 of SFLC Std Spec 5550, including Paragraph 3.1.3.

3. 1.1 Fire Prevention Responsible Party. The Contractor must appoint a Fire Prevention Responsible Party (FPRP) in accordance with Paragraph 3.1.4 of SFLC Std Spec 5550.

3.1.1.1. Any item in SFLC Std Spec 5550 that requires FPRP approval, also requires COR approval.

3.1.1.2. In addition to responsibilities listed in SFLC Std Spec 5550, the FPRP is responsible for the following tasks:

- Conduct all inspections per paragraph 3.7 of this work item. The FPRP may designate a representative to conduct these inspections on their behalf.

- Ensuring that contractor employees and sub-contractors understand the Fire Plan and all other requirements of this work item. This includes (but is not limited to) informing contractor/subcontractor employees of danger signals and egress procedures aboard the ship.

3.2 Fire Prevention and Response Conference. The Contractor must participate in the Fire Prevention and Response Conference as detailed in Paragraph 3.12 of SFLC Std Spec 5550.

3.2.1 At a minimum, the following personnel from the Contractor must attend the Fire Prevention and Response conference, the Fire Familiarization Tour and the Initial Inspection:

- Ship availability superintendent
- FPRP

3.2.2 The Fire Prevention and Response Conference, the Fire Responsibility Familiarization tour and the Initial Inspection must occur before the start of industrial work. Coordinate schedule with the COR.

3.2.3. The Contractor must invite the local fire department to the Fire Prevention and Response conference, the Fire Familiarization Tour and the Initial Inspection.

NOTE

Requirements for the Initial Inspection are covered in Paragraph 3.7 of this work item

3.3 Fire Zones. The Contractor must comply with the fire zone requirements from Paragraph 3.2 of SFLC Std Spec 5550.

3.3.1 Paragraph 3.2.3 of SFLC Std Spec 5550 is only applicable if the requirements of Paragraph 3.2.2 of SFLC Std Spec 5550 cannot be accomplished.

3.3.2 All material boundaries must be treated as fire boundaries.

3.3.3 All fire curtains must meet the requirements of MIL-C-24757. Disregard the NFPA 105 requirement in Paragraph 3.2.2 of SFLC Std Spec 5550.

3.4 Inoperable Fittings Log. The Contractor must inform the COR via CFR of fittings that are blocked or made inoperable per Paragraph 3.3 of SFLC Std Spec 5550. The Contractor does not need to maintain a separate Inoperable Fittings Log.

3.5. Firefighting systems. The Contractor must maintain fire protection systems per Paragraph 3.4 of SFLC Std Spec 5550.

3.5.1 Contractor personnel are NOT authorized to operate fixed firefighting systems per Paragraph 3.4.6.6.1 of SFLC Std Spec 5550

3.5.2 The existing arrangement of AFFF equipment meets the requirements of Paragraph 3.4.11 of SFLC Std. Spec 5550. This paragraph is only applicable if the Contractor blocks or moves AFFF material or equipment.

3.5.3 The existing arrangement of portable fire extinguishers meets the 50-foot requirement of Paragraph 3.4.12.1 of SFLC Std Spec 5550. This paragraph is only applicable if the Contractor blocks or moves fire extinguishers.

3.5.4. The contractor must propose an alternative or mitigation to fire risks when fixed systems are taken out of service in accordance with Paragraph 3.4.1 of SFLC Std Spec 5550.

3.6. Fire Alarm. The Contractor must comply with the requirements of Paragraph 3.7 of SFLC Std Spec 5550 if the fire alarm system will be manipulated. The "additional personnel" mentioned in Paragraph 3.7.1 of SFLC Std Spec 5550 must be provided by the Contractor.

3.7 Fire Prevention Inspections. The Contractor must conduct inspections in accordance with SFLC Std Spec 5550 Paragraph 3.11.

3.7.1 All inspections in paragraph 3.11 of SFLC Standard Spec 5550 must be conducted in the presence of a Coast Guard Inspector.

3.7.2 Disregard paragraph 3.11.1 of SFLC Std Spec 5550 and replace with the following:

"Initial Inspection. The FPRP, along with the COR (or a designated representative), must conduct an initial inspection to evaluate potential fire hazards in all areas with scheduled work. This inspection must note the existing status of all items in Paragraph 3.11.2 of SFLC Standard Spec 5550. Submit the results of the initial inspection to the COR via a CFR. This inspection must occur before commencing industrial work."

4. NOTES

None.

WORK ITEM 2: Temporary Services, Provide - Cutter

1. SCOPE

1.1 Intent. This work item describes the requirements for the Contractor to provide temporary services to the Cutter, during the performance of this availability.

1.2 Government-furnished property.

None.

2. REFERENCES

COAST GUARD DRAWINGS

None.

COAST GUARD PUBLICATIONS

Surface Forces Logistics Center Standard Specification 0000 (SFLC Std Spec 0000), 2022, General Requirements

Surface Forces Logistics Center Standard Specification 8635 (SFLC Std Spec 8635), 2022, Temporary Services

OTHER REFERENCES

None.

3. REQUIREMENTS

3.1 General.

3.1.1 CIR.

None.

3.1.2 Tech Rep.

Not applicable.

3.1.3 Protective measures. The Contractor must furnish and install all protective measures in accordance with SFLC Std Spec 0000, paragraph 3.3.3 (Vessel component, space, and equipment protection).

3.1.4 Interferences. The Contractor must handle all interferences in accordance with SFLC Std Spec 0000, paragraph 3.3.5 (Interferences).

3.2 Temporary service particulars. The Contractor must provide the below listed temporary services, in accordance with SFLC Std Spec 8635.

TABLE 1 - SERVICE SELECTION

*SUB-PARAGRAPH	TITLE	Y/N
3.3.1	Office space	**N**
3.3.2	Telephone and internet access	**N**
3.3.3	Parking	**N**
3.3.4	Duty section berthing: 9 male, 3 female. Duty section berthing must be provided for the entire duration of the availability.	**N**
3.3.5	Electrical power (including all requirements in associated sub-paragraphs)	**N**
3.3.6	Hull grounding straps (not applicable when cutter is waterborne)	**N**
3.3.7	Compressed air (including all requirements in associated sub-paragraphs)	**Y**
3.3.8	Hazardous material/hazardous waste disposal (see Tables 2 and 3 below)	**Y**
3.3.9	Heavy lift equipment: 60 hours	**Y**
3.3.10	Water supply	**N**
3.3.10.1	Potable water	**N**
3.3.10.2	Hot-circulating water	**N**
3.3.10.3	Cooling water	**Y**
3.3.10.4	Firemain system (including all requirements in associated sub-paragraphs)	**N**
3.3.11	Steam (including all requirements in associated sub-paragraphs)	**N**
3.3.12	Refuse disposal	**N**
3.3.13	Sewage and grey water disposal (including all requirements in associated sub-paragraphs)	**N**
3.3.14	Storage – General (including all requirements in associated sub-paragraphs):	**Y**
3.3.14	Dry stores.	**N**
3.3.14	Paint and flammable stores.	**N**
3.3.14	Refrigerated stores.	**Y**
3.3.15	Small boat storage (including all requirements in associated sub-paragraphs)	**N**

***Each sub-paragraph number relates directly to the identical sub-paragraph number in SFLC Std Spec 8635.**

TABLE 2 - HAZARDOUS WASTE DISPOSAL – LIQUIDS (GALLONS)

PAINT THINNERS	ENGINE COOLANT	BILGE WATER
2,000 GAL	15,000 GAL	20,000 GAL

TABLE 3 - HAZARDOUS WASTE DISPOSAL – SOLIDS

OILY FILTERS	OILY RAGS (LBS)	EMPTY 1-GAL CONTAINER*	EMPTY 5-GAL CONTAINER*	EMPTY 55-GAL CONTAINER*
120	N/A	N/A	N/A	N/A

***Previously housed hazardous materials.**

3.3 Modifications to Services Listed in SFLC Std Spec 8635. Modify the services listed to be provided from the requirements listed in SFLC Std Spec 8635 as shown below:

3.3.1 Compressed Air. Provide compressed air to the existing piping system as specified in paragraph 3.3.7.1. All three ship's compressors must be completely isolated from the piping system with the use of blank flanges.

3.3.2 Heavy Lift Equipment. Modify paragraph 3.3.9 of Std Spec 8635 to include 60 hours of cranes services over the course of the availability. Submit a CFR weekly tracking crane hours, forklift services and manlift services used and remaining.

3.3.3 Cooling water. Modify 3.3.10.3 of SFLC Std Spec 8635 as follows: Maintain condenser cooling water at 120 GPM to one Air Conditioning plant at all times. Provide flow and pressure gauge for monitoring.

3.3.4 Storage facilities. Modify 3.3.14.5 of SFLC Std Spec 8635 to provide 500 cu.ft. of frozen food storage and 450 cu.ft. of refrigerated food storage until the ship's Refrigeration Plant is fully operational.

3.3.4.1 In lieu of providing frozen and refrigerated storage, the Contractor has the option of maintaining refrigerator and freezer capabilities onboard while performing Work Item 29.

3.3.5 Protective Deck Covering. Provide and install deck coverings bulkhead to bulkhead with no deck showing on the edges in accordance with Std. Spec 0000 paragraph 3.3.3 and remove the same upon completion of the availability or at the request of the Coast Guard Inspector. Cover all decks in work areas and access routes to work areas, including the 01 deck passageways, the Main deck passageways, and the 1 deck passageways Tape all seams and edges. The Contractor must keep the protective covering in good repair for the duration of the contract and must repair with like material, before contract completion, all permanently installed deck and deck covering damaged by yard personnel. The Contractor must inspect the protective covering each morning, and must repair any deficient areas, prior to commencing work. Use plywood in areas of equipment removal routes, all heavily trafficked passageways and stair tower vestibules.

3.3.6 Industrial Ship Cleaning. The Contractor must complete a thorough ship's cleaning at the end of each workday removing all dirt, debris, trash, grinding dust and excess material from the vessel in and around areas where work is being accomplished. The standard for this daily cleanup is that the decks must be broom/vacuum clean, no liquids must be left standing on decks, and items which will not be further used for the work must be removed from the vessel.

3.3.6.1 The Contractor must provide garbage bags throughout ship for collection of debris and garbage and empty as needed. Garbage bags must be maintained in a sanitary condition.

3.3.7 Oily Waste Tracking. Submit a CFR weekly documenting quantity of bilge water, oily filters and oily rags disposed of and remaining on the contract.

3.2 Extended temporary services. If the performance period of the contract is extended by the KO, the contractor must continue to provide all temporary services as specified herein for the extension period.

4. NOTES

This section is not applicable to this work item.

WORK ITEM 3: Tenting, Provide (Optional)

1. SCOPE

1.1 Intent. This work item describes the requirements for the Contractor to provide suitable working condition and protect environment from project materials and processes in work requiring tenting, including but not limited to compartments or areas listed below and in Table 1.

- WORK ITEM : Superstructure, Preserve
- WORK ITEM : Stack, Preserve
- WORK ITEM : Deck Covering (Slip-Resistant) Fore Deck, Renew
- WORK ITEM 34 : A FRAME
- WORK ITEM 42 : Miranda Davit
- WORK ITEM 43: AFT CRANE
- WORK ITEM 44 : AFT ARTICULATING
- WORK ITEM 46 : Deck Crane (Starboard)
- WORK ITEM 47 : Deck crane (Port)

TABLE 1 TENTING FOR EXTERIORS

TENTING	LOCATIONS
Superstructure	Bow to Stern, Main Deck to 05 and 06 Level Decks
- Bow Quarter / Fore Deck 01-0-0-X	Bow to Fr 33 (incl. Bulwarks)
- Bow House (incl. Shore Power Enclosure)	Fr 21 to 33, 01 to 03 Level Decks
- Deck House and Pilot House	Fr 33 to 63, 01 to 06 Level Decks (Top of Pilot House)
- Amidships and Hangar	Fr 63 to 117, 01 to 05 Level Decks (Top of Helo Control Station)
- Stern House	Fr 117 to 144, Main Deck to 02 Level Decks (Flight Deck Edges excluding Flight Deck Net)
- Stern Quarter	Fr 135 to Stern (incl. Stanchions and Rails)
Stack	Fr 75 to 90, 04 to 06 Level Decks (Top of Stack)

1.2 Government-furnished property.

None.

2. REFERENCES

COAST GUARD DRAWINGS

Coast Guard Drawing 420-WAGB-612-003, Rev E, Helicopter Safety Nets

Coast Guard Drawing 420-WAGB-801-001, Rev K, Booklet of General Drawings

NAVAIR Drawing 626883, Rev D, Visual Landing Aids Installation and Clearance Requirements, WAGB-420 Class Ships

COAST GUARD PUBLICATIONS

Surface Forces Logistics Center Standard Specification 0000 (SFLC Std Spec 0000), 2022, General Requirements

Surface Forces Logistics Center Standard Specification 6310 (SFLC Std Spec 6310), 2022, Requirements for Preservation of Ship Structures

OTHER REFERENCES

Code of Federal Regulations (CFR) Title 29, Part 1910, 2017, Occupational Safety and Health Standards

Code of Federal Regulations (CFR) Title 29, Part 1915, 2013, Occupational Safety and Health Standards for Shipyard Employment

Code of Federal Regulations (CFR) Title 40, 2013, Protection of the Environment

The Society for Protective Coatings (SSPC) Surface Preparation Specification No.3 (SSPC-SP 3), 2024, Power Tool Cleaning

The Society for Protective Coatings (SSPC) Surface Preparation Specification No.11 (SSPC-SP 11), 2020, Power Tool Cleaning to Bare Metal

3. REQUIREMENTS

3.1 General.

3.1.1 CIR. The Contractor must submit a CIR for the inspections listed in the following paragraph(s) :

None.

3.1.2 Tech Rep. The Contractor must provide the services of Tech Reps and personnels as follows :

None.

3.1.3 Protective measures. The Contractor must furnish and install all protective measures in accordance with SFLC Std Spec 0000, paragraph 3.3.3 (Vessel component, space, and equipment protection).

NOTE

All shipboard outfits and fitting (e.g. flight deck nets) are not allowed using to prevent damage.

3.1.4 Interferences. The Contractor must handle all interferences in accordance with SFLC Std Spec 0000, Paragraph 3.3.5 (Interferences).

3.1.5 Work locations. The concerned work areas are listed in Table 1. See the applicable drawings in Section 2 References for guidance, locations, and details.

3.1.6 Materials, tools, and services. The Contractor must provide service, tools, and materials to accomplish the requirements in this work item. New components, parts, materials, and paints with the same color, comparable and matching material properties as the existing components/parts. Use references in Sections 1, 2 and SFLC Std Specs for guidance, required materials, and details.

3.2 Environmental protection. The Contractor must abide by all requirements for environmental protection specified in SFLC Std Spec 0000, Appendix A (Requirements for Environmental Protection at Contractor Operated (Non USCG) Facilities), and Appendix B (Requirements for Environmental Protection at USCG Facilities).

3.3 Scaffolding, safety, and protection. The Contractor must comply with all required and applicable safety and protection specified in SFLC Std Spec 0000, Paragraph 3.3.1 (Personnel safety and property protection - general), and all OSHA safety and health regulations, and any other applicable federal, state, and local laws, and regulations, for the protection of both personnel and property.

- Suitable Scaffolding and/or lifelines are required for working above five feet (29 CFR 1910 and 1915)
- Temporary lines or rails must be installed in place of all removed lifelines or life rails, and be retained until replacement tasks have been completed.
- Adequate illumination is required in walkways, work areas, and access to provide a safe work environment (29 CFR 1915.92(a)).
- Scaffolding must not contact with any C5ISC, Navigation, Weapons, Controls, and Components.

3.4 Tenting. The Contractor must tent the designated areas as listed in the Table 1 (prior to blasting and preservation operations) in accordance with SFLC Std Spec 6310, Paragraph 3.1.5 (Tenting and ambient condition control). Ensure that tenting is in place for the duration of works requiring tenting. Tenting features must be as follows :

- Tenting must be set up in a way that it will not interfere with the blasting, preservation, or machinery removal and reinstallation operations.
- Tenting must be constructed to prevent precipitation from affecting normal repair operations, and be able to withstand severe inclement weather conditions.
- Tenting must be outfitted with a re-sealable opening that will permit loading and unloading of equipment and supplies.
- Tenting must be used to protect the environment from possible contamination due to preservation work.
- Temporary tenting must be included to protect exterior surfaces from inclement weather, while undergoing preservation.
- Temporary enclosures may be rigged and left overnight as long as they do not block egress routes or ventilation.
- Tenting must not contact with any C5ISC, Navigation, Weapons, Controls, and Components.

3.4.1 Air test. In the presence of the Coast Guard Inspector, the Contractor must air test (low air pressure) the exterior of tenting installed for no leaking. Reseal until no leaking if leaking is found.

3.4.2 Inspection and repair. The Contractor must inspect and repair any damaged areas of tenting at the beginning and end of every workday.

3.4.3 Restoration. The Contractor must remove all tenting equipment and material, inspect for the presence of contamination, and return all contaminated equipment, components, and spaces to original condition of cleanliness at the completion of work.

3.5 Ambient condition control. The Contractor must control environmental conditions necessary for required works in accordance with SFLC Std Spec 6310, Paragraph 3.1.4 (Ambient condition parameters).

3.5.1 Control equipment. To maintain ambient conditions recommended by coating system manufacturers, and accomplish surface preparation and coating application, the Contractor must provide suitable ambient condition control equipment including, but not limited to :

- Lighting : Lights and light fixtures
- Temperature : HVAC systems (e.g. heaters, air-conditioners)
- Humidity : Humidifiers, or dehumidifiers
- Air circulation : Blowers, and ventilators

3.5.2 Control plan. The Contractor must submit an ambient condition control plan to the COR at the Arrival Conference prior to initiating ambient condition control process.

3.6 Touch-up preservation. The Contractor must prepare and coat all new and disturbed surfaces to match existing adjacent surfaces in accordance with SFLC Std Spec 6310, Paragraph 3.1.13 (Touch-ups and minor coating repairs).

4. NOTES

This section is not applicable to this work item.

WORK ITEM 4: Sea Trial Performance, Support, Provide

1. SCOPE

1.1 Intent. This work item describes the requirements for the Contractor to provide support for the performance of sea trials.

1.2 Government-furnished property.

None.

2. REFERENCES

COAST GUARD DRAWINGS

None

COAST GUARD PUBLICATIONS

Surface Forces Logistics Center Standard Specification 0000 (SFLC Std Spec 0000), 2022, General Requirements

OTHER REFERENCES

None

3. REQUIREMENTS

3.1 General.

3.1.1 CIR.

None.

3.1.2 Tech Rep. Necessary tech reps are included in other specifications.

3.1.3 Protective measures. The Contractor must furnish and install all protective measures in accordance with SFLC Std Spec 0000, (Vessel component, space, and equipment protection).

3.1.4 Interferences. The Contractor must handle all interferences in accordance with SFLC Std Spec 0000, paragraph 3.3.5 (Interferences).

3.2 Trial applicability. The Contractor must provide support to the vessel crew to perform sea trials for all work items that require conducting operational tests while the vessel is waterborne or underway, prior to the item certification as being complete. The Contractor is responsible for recording test data and submitting CFRs to the COR.

TABLE 1 – SEA TRIAL WORK ITEMS

WORK ITEM
Oily Water Separator, Annual Maintenance
Fuel Oil Separator (FOP), Overhaul
Lube Oil Separator (LOP), Overhaul

3.2.1 Pre-trial examination. The Contractor will document any discrepancies and submit a CFR.

3.3 Sea trial agenda. The Contractor must prepare an agenda that details the Contractor's plans for ensuring completion of the required dock and sea trials.

3.3.1 Agenda contents. The Contractor must ensure the agenda consists of chronological list of administrative events, inspection events and test events. Events must be arranged to permit expeditious conduct with minimum interference between concurrent events.

NOTE

Mutually compatible events may be scheduled simultaneously.

3.3.1.1 The Contractor must ensure the agenda identifies installation of any test equipment or component modification that could impact the normal operation of equipment or systems during performance of the trials.

3.3.1.2 The Contractor must ensure the agenda identifies any operating instructions or special test procedures that could impact the normal operations of equipment or systems.

3.3.1.3 The Contractor must ensure the agenda includes the full name, title, security clearance, home address, home telephone number and name of next of kin of each Contractor-personnel scheduled to ride the ship during performance of the trials.

3.3.2 Agenda submission requirements. The Contractor must submit four legible copies of the sea trial agenda to the COR one week prior to the scheduled trials. The Contractor must coordinate both the planning and conduct of the post-overhaul ship trials with the ship's force (see 4.1 (Equipment operation).

3.4 Environmental compliance. The Contractor must abide by the below-listed rules, in addition to all other Federal, state, and local rules governing the overboard discharge of garbage and oil in the water.

3.4.1 Discharge of garbage.

TABLE 1 – GARBAGE RULES

GARBAGE TYPE	RULE
Plastics, including synthetic ropes, fishing nets, and plastic bags	Prohibited in all areas
Floating dunnage, lining and packing materials	Prohibited less than 25 miles from nearest land
Food waste, paper, rags, glass, metal, bottles, crockery and similar refuse	Prohibited less than 12 miles from nearest land

Comminuted or ground food waste, paper, rags, glass, etc.	Prohibited less than 3 miles from nearest land

3.4.2 Discharge of oil. The Contractor must be aware that the Federal Water Pollution Control Act prohibits the discharge of oil or oily waste upon or into any navigable waters of the U.S. The prohibition includes any discharge that causes a film or discoloration of the surface of the water or causes a sludge or emulsion beneath the surface of the water.

CAUTION

Violators are subject to substantial civil and/or criminal sanctions including fines and imprisonment.

NOTE

Coast Guard personnel will operate all shipboard machinery and equipment.

3.5 Dock trials. The Contractor must conduct dock trials to demonstrate the material readiness of the ship for sea trials. Additionally, all onboard tests conducted after installation and prior to sea trials to prove proper installation and satisfactory operation of equipment must be conducted in accordance with the requirements specified in the work items designated in paragraph 3.1 (Trial applicability). Ensure that the dock trials are begun no later than 12 hours prior to the scheduled sea trials.

3.5.1 The Contractor must provide a pier facility (or allow the cutter to move to a Coast Guard pier) in order to support dock trials. Dock trials may not be conducted while the cutter remains floating inside the dry-dock (not touching the blocks).

3.5.2 During dock trials, the Contractor must ensure the Contractor's personnel observe tests under their cognizance with Coast Guard Inspector and make such adjustments and repairs, as required.

3.6 Sea trials. As soon as possible after completion of the dock trials, the Contractor must coordinate performance of the seal trials, based on the operational tests, as required in the applicable work items, for the following purpose:

- Performing tests that could not be performed while the ship was moored.
- Serving as final step in proving the success of the overhaul/repair tasks required in the designated work items and ensuring that Contractor and COR are both satisfied that the ship is in all respects ready for final acceptance.

3.6.1 The Contractor must have representatives on board the cutter to observe the trials for the purpose of observing whether or not the repairs are satisfactory.

3.6.2 The Contractor must ensure the sea trials are being carried out in free route, away from other shipping, as designated by the COR.

3.6.3 Plan for an estimated **four (4)** days at a date to be determined by the COR.

3.7 Post-trial examination. After the completion of the sea trial, the Contractor must perform a careful and thorough examination of parts of the repaired machinery, as designated by the COR. If any part of the ship or its equipment fails to meet contractual requirements during trials, perform additional trials after corrective measures have been taken.

NOTES

1. Examples of dock trials include conducting cold (pre-light off) and hot checks, cycling machinery (rudders, BPU, turning gear, fin stabilizers), and conducting any post-docking shaft alignment verification checks. This time may also be used to on-load fuel, if needed for operations.

2. The conditions of the trials will be determined largely by the character of the work that has been performed in each case, and as designated by the COR. A full power trial should be run at this time unless the COR elects to defer this run until all new machinery parts are run-in or the training status of the crew permits full power operation without undue hazard.

3. This examination may be conducted by the Engineer Officer of the ship, in which case he will report the results of the examination to the COR, fully describing any defects or improper conditions found.

4. Representatives of manufacturers who have furnished ship components may be invited to witness trials subject to approval of the CO or OINC of the ship.

4. NOTES

This section is not applicable to this work item.

WORK ITEM 5: Recapitalize Science Data Network Infrastructure (SLEP)

1. SCOPE

1.1 Intent. This work item describes the requirements for the Contractor to upgrade the Polar Science Network (PSN) fiber optic and copper cables and ensure complete separation from the CGOne Network. The Contractor must ensure the new PSN system operates independently from the CGOne Network, improving reliability and reducing any possibility of network spillage.

1.2 Government-furnished property.

None.

2. REFERENCES

COAST GUARD DRAWINGS

Coast Guard Contract Guidance Drawing 420-WAGB-412-5, Rev 4, SLEP Polar Science Network Fiber System Block Wiring Diagram & Details.

COAST GUARD PUBLICATIONS

Surface Forces Logistics Center Standard Specification 0000 (SFLC Std Spec 0000), 2022, General Requirements

Surface Forces Logistics Center Standard Specification 0740, (SFLC Std Spec 0740) 2022 Edition, Welding and Allied Processes

Surface Forces Logistics Center Standard Specification 3041 (SFLC Std Spec 3041), 2022, Shipboard Electrical Cable Test

Surface Forces Logistics Center Standard Specification 3042 (SFLC Std Spec 3042), 2022, Shipboard Electrical Cable Removal, Relocation, Splice, Repair, and Installation

Surface Forces Logistics Center Standard Specification 6310 (SFLC Std Spec 6310), 2022, Requirements for Preservation of Ship Structures

OTHER REFERENCES

Electric Plant Installation Standard Methods for Surface Ships and Submarines, MIL-STD-2003 Series)

IEEE Recommended Practice for Electric Installations Aboard Ships, IEEE-STD-45-2002. Shipboard Bonding, Grounding, and Other Techniques for Electromagnetic Compatibility,

Electromagnetic Pulse (EMP), and Safety, MIL-STD-1310 (Series)

Optical Fiber Standard Testing Procedure (Multi-Mode Cable) ANSI/TIA/EIA-526-14 (OFSTP-14)

3. REQUIREMENTS

3.1 General.

3.1.1 Tech Rep.

None.

3.1.2 Protective measures. The Contractor must furnish and install suitable covering to seal off and protect all non-affected surfaces, equipment, and spaces in the vicinity of the work area against contamination during the performance of work. Upon completion of work, remove protective material and inspect for contamination. Clean all equipment and spaces contaminated due to improper protection to their original state of cleanliness.

3.1.3 Interferences. The Contractor must handle all interferences in accordance with SFLC Std Spec 0000, paragraph 3.3.5 (Interferences). Known interferences include, but are not limited to the following:

- Sheathing
- Bulkhead insulation
- Piping
- Decking system
- Cable ways

3.1.5 Electrical Work. The Contractor must accomplish all electrical work in accordance with SFLC Std Spec 3042 and test cables in accordance with SFLC Std Spec 3041. Utilize existing wireways for new cable runs as much as possible.

3.1.6 Personnel Qualification. The Contractor must ensure all personnel performing removal and installation of fiber optic equipment have the training of an electronics journeyman and be knowledgeable in the areas of electrical and physical standards for communications equipment.

3.2 Pre-Removal Requirements.

3.2.1 Operational Test-Initial. Prior to commencement of work, the Contractor must witness Coast Guard personnel perform an initial operational test of all items or shipboard devices to be disturbed, used, repaired, or altered, to demonstrate existing operational condition. Submit a CFR.

3.2.2 Disposal of Removed Equipment/Components. The Contractor must dispose of all removed equipment/components not designated for reinstallation in accordance with all Federal, State, and Local requirements.

3.2.3 Inspection. The Contractor must perform a visual inspection of exposed areas after interferences are removed. Notify the COR if damage or excessive corrosion is found. Perform NDT on the foundation prior to installation. Submit a CIR.

3.3 Material. The Contractor must supply the following for the installation of the new PSN system: All material listed as Installing Activity Furnished Equipment (IAFE) in accordance with the materials list in drawing 420-WAGB-412-5.

3.4 Removals.

WARNING

Lockout and tagout all electrical equipment prior to beginning work. Failure to do so could result in serious injury or death.

NOTE

The existing PSN is not fully documented. The Contractor is responsible for verifying the existing system layout and components prior to removal to prevent accidental disruption or removal of unrelated systems.

3.4.1 PSN Equipment. The Contractor must disconnect and remove existing PSN equipment, including, but not limited to, approximately 15 connection centers and 93 data ports.

3.4.2 PSN Fiber optic Cable. The Contractor must remove all PSN fiber optic cable previously connected to the equipment removed in section 3.4.1.

3.4.3 PSN Copper Cable. The Contractor must remove all PSN copper cable previously connected to the equipment removed in section 3.4.1.

3.5 Modifications and Installations.

NOTE

During installation ensure that the PSN remains separate from the CGOne Network.

3.5.1 PSN Connection Centers. The Contractor must install the new fiber optic PSN Connection Centers PSN-FO-CC-01, PSN-FO-CC-02, PSN-FO-CC-03, and PSN-FO-CC-04 in the Computer Lab 01-119-2-Q C4IT Rack #3, Science Lib/Conference Room 02-33-0-L C4IT Enclosure #8, Gyro Room 2-43-0-Q Starc Gravimeter Rack, and Computer Lab 01-119-2-Q Starc Rack #5 respectively. Each connection center assembly includes multiple rackmount enclosures and fiber optic connector panels. Use Coast Guard Drawing 420-WAGB-412-5 as guidance.

3.5.2 Fiber Optic Interconnection Boxes.

NOTE

The PSN consists of two distinct interconnections: (1) Networked (ships sensors), and (2) Point-to-point.

3.5.2.1 Fiber Optic Interconnection Boxes (Networked). The Contractor must install fifteen (15) new fiber optic interconnection boxes throughout the ship. Each interconnection box assembly includes an enclosure and multiple fiber optic connector panels. Use Coast Guard Drawing 420-WAGB-412-5 as guidance.

3.5.2.2 Fiber Optic Interconnection Boxes (Point-to-Point). The Contractor must install fifteen (15) new fiber optic point-to-point interconnection boxes throughout the ship. Each interconnection box

assembly includes an enclosure and multiple fiber optic connector panels. Use Coast Guard Drawing 420-WAGB-412-5 as guidance.

3.5.3 Data Port Junction Boxes. The Contractor must install all new PSN fiber optic data port junction boxes. Each data port junction box assembly includes enclosure, multiple terminals, and fiber optic connectors. Use Coast Guard Drawing 420-WAGB-412-5 as guidance.

3.5.4 Fiber Optic Cable. The Contractor must install all new PSN fiber optic cable throughout the ship. Use Coast Guard Drawing 420-WAGB-412-5 as guidance.

3.5.5 Copper Cable. The Contractor must install all new PSN copper cable throughout the ship. Use Coast Guard Drawing 420-WAGB-412-5 as guidance.

3.6 Cable Tags. The Contractor must tag all installed cables in accordance with Coast Guard Drawing 420-WAGB-412-5 and Section I of MIL-STD-2003.

3.7 Cable Labels. The contractor must label each individual fiber according to the distribution wiring details. Use Coast Guard Drawing 420-WAGB-412-5 as guidance.

3.8 Patch Cables. The contractor will need to supply manufactured three hundred (300) 5-7' and one hundred (100) 10-12' patch cables outlined in paragraph 3.3.4.. 2 Fiber, OM5, LC Duplex to LC Duplex, 2.0MM Zipcord, Riser 050502V5120002M, 2M, LSZH. 300 5-7' cables and 100 10-12' cables. Provide patch cables to the COR.

3.9 Pre-Op Testing Contractor must test all newly installed fiber optic cable at 850 NM and 1300 NM. Use Coast Guard Drawing 420-WAGB-412-005 and the testing procedures outlined in ANSI/TIA/EIA-526-14 (OFSTP-14) and ANSI/TIA-526-7 (OFSTP-7) for single mode as guidance. Contractor must record test results and provide a final report to the COR for review.3.11

3.10 Redlined Drawing Deliverables. The Contractor must "red-line" Coast Guard Drawing 420-WAGB-412-5 to reflect the work or deviations specified in this work item in accordance SFLC Std Spec 0850. Submit a CFR.

3.10.1 Preliminary/Draft Submission. No later than 24 hours after completion of this work item, submit a draft copy of the "red-lined" drawing(s) to the COR for review and approval.

3.10.2 Final Submission. No later than 10 calendar days after receiving Coast Guard comments or completion of the availability, whichever occurs first, incorporate all comments and deliver one set of the final, red-lined drawing(s) to the COR.

3.11 Operational Test – Post Repairs. After completion of work, the Contractor must thoroughly test, in the presence of the Coast Guard Inspector, and demonstrate all items or shipboard devices that have been disturbed, used, repaired, altered, or installed to be in satisfactory operating condition. Submit a CFR.

3.12 All panel foundation welds and bulkhead penetrations shall be cleaned and checked by NDT inspection in accordance with SFLC Std Spec 0740. Conduct inspection in the presence of CG inspector. Submit a CFR of inspection results.

3.13 Touch-up preservation. The Contractor must prepare and coat all new and disturbed surfaces to match existing adjacent surfaces in accordance with SFLC Std Spec 6310, paragraph

3.1.13 (Touch-ups and minor coating repairs).

NOTES.

None.

WORK ITEM 6: Recapitalize CGOne Network Infrastructure (SLEP)

1. SCOPE

1.1 Intent. This work item describes the requirements for the Contractor to upgrade the Coast Guard One (CGOne) Network fiber optic cables and ensure complete separation from the Polar Science Network (PSN). The Contractor must ensure the new CGOne Network operates independently from the PSN, improving reliability and reducing any possibility of network spillage.

1.2 Government-furnished property.

None.

2. REFERENCES

COAST GUARD DRAWINGS

Coast Guard Contract Guidance Drawing 420-WAGB-412-006 Rev 3, CGOne Fiber System Block Wiring Diagram & Details

COAST GUARD PUBLICATIONS

Surface Forces Logistics Center Standard Specification 0000 (SFLC Std Spec 0000), 2022, General Requirements

Surface Forces Logistics Center Standard Specification 0740, (SFLC Std Spec 0740) 2022 Edition, Welding and Allied Processes

Surface Forces Logistics Center Standard Specification 3041 (SFLC Std Spec 3041), 2022, Shipboard Electrical Cable Test

Surface Forces Logistics Center Standard Specification 3042 (SFLC Std Spec 3042), 2022, Shipboard Electrical Cable Removal, Relocation, Splice, Repair, and Installation

Surface Forces Logistics Center Standard Specification 6310 (SFLC Std Spec 6310), 2022, Requirements for Preservation of Ship Structures

OTHER REFERENCES

Electric Plant Installation Standard Methods for Surface Ships and Submarines, MIL-STD-2003 (Series)

IEEE Recommended Practice for Electric Installations Aboard Ships, IEEE-STD-45-2002. Shipboard Bonding, Grounding, and Other Techniques for Electromagnetic Compatibility,

Electromagnetic Pulse (EMP), and Safety, MIL-STD-1310 (Series)

3. REQUIREMENTS

3.1 General.

3.1.1 Tech Rep.

None.

3.1.2 Protective measures. The Contractor must furnish and install suitable covering to seal off and protect all non-affected surfaces, equipment, and spaces in the vicinity of the work area against contamination during the performance of work. Upon completion of work, remove protective material and inspect for contamination. Clean all equipment and spaces contaminated due to improper protection to their original state of cleanliness.

3.1.3 Interferences. The Contractor must handle all interferences in accordance with SFLC Std Spec 0000, paragraph 3.3.5 (Interferences). Known interferences include, but are not limited to the following:

- Sheathing
- Bulkhead insulation
- Piping
- Decking system
- Cable Ways

3.1.5 Electrical Work. The Contractor must accomplish all electrical work in accordance with SFLC Std Spec 3042 and test cables in accordance with SFLC Std Spec 3041. Utilize existing wireways for new cable runs as much as possible.

3.1.6 Personnel Qualification. The Contractor must ensure all personnel performing removal and installation of fiber optic equipment have the training of an electronics journeyman and be knowledgeable in the areas of electrical and physical standards for communications equipment.

3.2 Pre-Removal Requirements.

3.2.1 Disposal of Removed Equipment/Components. The Contractor must dispose of all removed equipment/components identified in paragraph 3.4.2, not designated for reinstallation in accordance with all Federal, State, and Local requirements.

3.2.2 Inspection. The Contractor must perform a visual inspection of exposed areas after interferences are removed. Notify the COR if damage or excessive corrosion is found. Perform NDT in accordance with standard specification 0740 on the foundation prior to installation. Submit a CFR.

3.3 Material. The Contractor must supply the following material for the installation of the new CGOne system: All material listed as Installing Activity Furnished Equipment (IAFE) in accordance with the materials list is in drawing 420-WAGB-412-006.

3.4 Removals.

WARNING

Lockout and tagout all electrical equipment prior to beginning work. Failure to do so could result in serious injury or death.

NOTE

The existing CGOne Network is not fully documented. The Contractor is responsible for verifying the existing system layout and components prior to removal to prevent accidental disruption or removal of unrelated systems.

3.4.1 CGOne Equipment. Ships force must power down and remove existing network switches prior to contractors' removal/install of new fiber.

3.4.1.1 The Contractor must identify all other equipment to be removed and receive confirmation from ships representative prior to removal of approximately 99 data ports and all remaining connection centers.

3.4.2 CGOne Fiber Optic Cable. The Contractor must survey and remove all CGOne fiber optic cables from patch panels in the Radio Room 04-50-0-C to all RIC/WIC panels and fiber data ports throughout the ship. Use Coast Guard drawing 420-WAGB-412-006 as guidance for expected locations of equipment.

3.5 Modifications and Installations.

NOTE

During installation ensure that the CGOne Network remains separate from the PSN.

3.5.1 Connection Center. The Contractor must install the new fiber optic CGOne Connection Center FO-CC-01 in the Radio Room 04-50-0-C. The connection center assembly consists of multiple rackmount enclosures and fiber optic connector panels. Use Coast Guard Drawing 420-WAGB-412-006 as guidance.

3.5.2 Fiber Optic Interconnection Boxes. The Contractor must install eight (8) new 24-port fiber optic interconnection boxes. Each interconnection box assembly includes wall mount enclosure and multiple connector panels. Use Coast Guard Drawing 420-WAGB-412-006 as guidance.

3.5.3 Data Port Junction Boxes. The Contractor must install all new CGOne fiber optic data port junction boxes. Each data port junction box assembly includes enclosure, multiple terminals, and fiber optic connectors. Use Coast Guard Drawing 420-WAGB-412-006 as guidance.

3.5.4 Fiber Optic Cable. The Contractor must install all new CGOne fiber optic cable throughout the ship. Use Coast Guard Drawing 420-WAGB-412-006 as guidance.

3.5.4.1 Cable Tags. The Contractor must tag all installed cables in accordance with Coast Guard

Drawing 420-WAGB-412-006 and Section I of MIL-STD-2003.

3.5.4.2 Pre-Op Testing. Contractor must test all newly installed fiber optic cable at 1310 NM and 1550 NM. Use Coast Guard Drawing 420-WAGB-412-006 and the testing procedures outlined in ANSI/TIA/EIA-526-14 (OFSTP-14) as guidance. Contractor must record test results and provide a final report to the COR for review.

3.5.4.3 Patch Cables. The contractor will need to supply manufactured OM5 fiber, LC to LC, patch cables for connectivity in radio and all distribution boxes. (300) 5-7' cables and (100) 10-12' cables. Provide these cables to the COR.

3.6 Redlined Drawing Deliverables. The Contractor must "red-line" Coast Guard Drawing 420-WAGB-412-006 to reflect the work or deviations specified in this work item in accordance SFLC Std Spec 0850. Submit a CFR.

3.6.1 Preliminary/Draft Submission. No later than 24 hours after completion of this work item, submit a draft copy of the "red-lined" drawing(s) to the COR for review and approval.

3.6.2 Final Submission. No later than 10 calendar days after receiving Coast Guard comments or completion of the availability, whichever occurs first, incorporate all comments and deliver one set of the final, red-lined drawing(s) to the COR.

3.7 Operational Test – Post Repairs. After completion of work, the Contractor must thoroughly test, in the presence of the Coast Guard Inspector, and demonstrate all items or shipboard devices that have been disturbed, used, repaired, altered, or installed to be in satisfactory operating condition. Submit a CFR.

3.8 Touch-up preservation. The Contractor must prepare and coat all new and disturbed surfaces to match existing adjacent surfaces in accordance with SFLC Std Spec 6310, paragraph 3.1.13 (Touch-ups and minor coating repairs on).

4. NOTES.

None.

WORK ITEM 7: Recapitalize Ice Radar (SLEP)

1. SCOPE

1.1 Intent. This work item describes the requirements for the Contractor to conduct preparatory work prior to installation of a new Rutter sigma S6 ice radar computer located inside the bridge console. A Rutter-certified technician will perform the sigma S6 system installation and commissioning after the contractor completes the installation of a shelf, and cables run.

NOTE

The GFE listed in paragraph 1.2 will be provided to assist in the installation of the Sigma S6 ice RADAR system but is not an all-inclusive list of material needed. Any additional material, including items listed in Coast Guard drawing 420-WAGB-451-011 not designated as GFE, shall be considered contractor furnished.

1.2 Government-furnished property.

MTI	ITEM DESCRIPTION	NSN/PN	QTY	ESTIMATED COST ($/UNIT)
N	COMPUTER, SIGMA S6 ICE NAVIGATOR. INTEL i7-8700. 4U	PN: LEV-019-V2	1 ea.	$16,000
N	INTERFACE HARDWARE W/ CABLE KIT	PN: RSI 6000	1 ea.	$3,500
Y	DISPLAY UNIT, 19-INCH	PN: JH19T14MMD-AA1-AOAA	1 ea.	$5,000
Y	KEYBOARD, DATA ENTRY	PN: 591-0032	1 ea.	$1,500
Y	TRACKBALL, DATA ENTRY	PN: 610-0032	1.ea.	$1,000
Y	DISPLAY UNIT, 15-INCH	PN: JH15T17MMD-AA1-AAAA	1 ea.	$2,200
N	RADAR CONNECTION CABLE, (10 M)	PN: RW-00136	1 ea.	$1,800
N	KVM EXTENDER OVER CAT/FIBER	PN: KVXHP-100	1 pair	$3,000
N	POWER ADAPTER, 12 VDC, 3A	PN: KVM-12VDC3A	1 ea.	$200
N	MAGNETRON, X-BAND	000-140-762	1ea	$700

2. REFERENCES

COAST GUARD DRAWINGS

420-WAGB-451-011, SLEP Ice Radar Installation BWD & Details

420-WAGB-423-013, SPS-461 GPS System Installation BWD & Details

420-WAGB-426-010, Gyro System MK39 & MK27-F Elementary Wiring Diagram and Details

420-WAGB-423-011, 1SG38-CGECDIS(V)WAGB-420 Install BWD and Details

420-WAGB-423-015, Booklet of Electronic 1SG38-AIS-AFLOAT(V) Installation EWD & Details

420-WAGB-451-005, AN/SPS-50(V)4 Radar Install Block Wiring Diagram

420-WAGB-451-006, AN/SPS-50(V)4 Installation Wiring Data (COED)

COAST GUARD PUBLICATIONS

Surface Forces Logistics Center Standard Specification 0000 (SFLC Std Spec 0000), 2022, General Requirements

Surface Forces Logistics Center Standard Specification 0740, (SFLC Std Spec 0740) 2022 Edition, Welding and Allied Processes

Surface Forces Logistics Center Standard Specification 0850 (SFLC Std Spec 0850), 2022, General Requirements for Drawing Preparation

Surface Forces Logistics Center Standard Specification 3041 (SFLC Std Spec 3041), 2022, Shipboard Electrical Cable Test

Surface Forces Logistics Center Standard Specification 3042 (SFLC Std Spec 3042), 2022, Shipboard Electrical Cable Removal, Relocation, Splice, Repair, and Installation

Surface Forces Logistics Center Standard Specification 6310 (SFLC Std Spec 6310), 2022, Requirements for Preservation of Ship Structures

Technical Publication TP: E-451-031-B, AN/SPS-50(V) Marine Radar/ARPA – Operator's Quick Reference Guide & Operator's Manual

Technical Publication TP: E-451-032-A, AN/SPS-50(V) Marine Radar/ARPA – Installation Manual

Technical Publication TP: E-410-008, Seawatch-Monitors, Hatteland Display Technical Manual

U.S. Coast Guard Computerized Maintenance System, CP-ELEX, EE-C-RDNT MPC Card

OTHER REFERENCES

Electrical Plant Installation Standard Methods for Surface Ships and Submarines, MIL-STD-2003-A

Shipboard Bonding, Grounding, & Other Techniques for Electromagnetic Compatibility and Safety, MIL-STD-1310 (series)

3. REQUIREMENTS

3.1 General.

3.1.1 CIR.

Paragraph 3.2 Operational Test, Initial

3.1.2 Technical Representative. The Government shall provide the services of a certified technical representative for the Rutter sigma S6 Ice Navigator system to include commissioning

services, installation, testing, and operation & maintenance training. The technical representative shall provide the following:

- Manufacturer's proprietary system/equipment information, software and tools.
- Ensure compliance with manufacturer's procedures and standards during the assembly, installation, inspection, repair and any modification to the system.
- Oversee the calibration of the equipment, system testing, commissioning and certification.

NOTE

The Government shall provide the services of a certified Rutter technical representative to perform the on-site installation and testing.

3.1.2.1 The Contractor shall notify the COR in writing when the shipyard has completed paragraph 3.3 thru paragraph 3.4.7 and is ready for the Rutter technical representative to install the Ice RADAR. The COR shall be notified no later than 20 days prior to requested arrival of the technical representative.

3.1.3 Protective measures. The Contractor must furnish and install all protective measures in accordance with SFLC Std Spec 0000, paragraph 3.3.3 (Vessel component, space, and equipment protection).

3.1.4 Interferences. The Contractor must handle all interferences in accordance with SFLC Std Spec 0000, paragraph 3.3.5 (Interferences). Known interferences include, but are not limited to the following:

- Sheathing
- Cableways
- Piping

3.1.5 Electrical work. The Contractor must accomplish all electrical work in accordance with SFLC Std Spec 3042, and test cables in accordance with SFLC Std Spec 3041. Utilize existing wire ways for new cable runs as much as possible.

3.2 Operational test, initial. Prior to commencement of work, the Contractor shall witness Coast Guard personnel perform an initial operational test of all items or shipboard devices to be disturbed, used, repaired, or altered, to demonstrate existing operational condition. **Submit CIR.**

3.2.1 The Contractor must notify COR 72-hours in advance and coordinate operational testing with the COR, crew and rutters technical representative to ensure all corresponding work was performed on the AN/SPS-50(V)4 system prior to the sigma S6 ice RADAR removal.

3.3 Removals.

3.3.1 The Contractor must remove the existing 19-inch Hatteland ice radar display (PC# R3) in the Pilothouse A1 console.

3.3.2 The Contractor must remove the existing ice radar keyboard (PC# R4) from the Pilothouse A1 console.

3.3.3 The Contractor must remove the existing ice radar trackball (PC# R5) from the Pilothouse A1 console.

3.3.4 The Contractor must remove the existing 15-inch Hatteland ice radar display (PC# R6) from the Aloft Conn overhead.

3.4 Installation

3.4.1 The Contractor must install the new 19-inch ice radar display (PC#3) in accordance with CG drawing 420-WAGB-451-011 and Technical Publication TP: E-410-008, Seawatch-Monitors, Hatteland Display Technical Manual.

3.4.2 The Contractor must install the new keyboard (PC# 4) in accordance with CG drawing 420-WAGB-451-011.

3.4.3 The Contractor must install the new trackball (PC# 5) in accordance with CG drawing 420-WAGB-451-011.

3.4.4 The Contractor must install the new 15-inch ice radar display (PC# 6) in accordance with CG drawing 420-WAGB-451-011 and Technical Publication TP: E-410-008, Seawatch-Monitors, Hatteland Display Technical Manual.

3.4.5 The Contractor must install a new type CAT6 cable (PC# 14), labeled R-DD100, from the Pilothouse A1 console to Aloft Conn using established cableways. Terminate cable on each end using an RJ-45 male connector [PC# 15]. Coil cable on both ends. Rutter technicians will make final connections to the ice radar system in accordance with CG drawing 420-WAGB-451-011.

3.4.6 The Contractor must install new foundations IAW CG drawing 420-WAGB-451-011. Conduct welding and associated NDE in accordance with SFLC Std Spec 0740.

3.4.7 Label. The Contractor to install labels using laminated plastic tags (PC# 12) shown on CG drawing 420-WAGB-451-011, (sheet 2). Label all installed cables in accordance with SFLC Std Spec 3042.

3.5 The Contractor must assist the Rutter technical representative during the installation of the new sigma S6 ice radar computer [PC# 1] in Pilothouse A1 console in accordance with CG drawing 420-WAGB-451-011.

3.6 Redlined drawing deliverable(s). The Contractor must “red-line” Coast Guard drawings: 420-WAGB-451-011, SLEP Ice Radar Installation BWD & details, to reflect the work or deviations specified in this work item in accordance SFLC Std Spec 0850.3.3.1.

3.6.1 Preliminary/draft submission. No later than 24 hours after completion of this work item, submit a draft copy of the "red-lined" drawing(s) to the COR for review and approval.

3.6.2 Final submission. No later than 10 calendar days after receiving Coast Guard comments or completion of the availability, whichever occurs first, incorporate all comments and deliver one set of the final, red-lined drawing(s) to the COR.

3.7 Operational Testing. The Contractor shall assist the Rutter technical representative to verify the equipment and cabling meet all installation requirements before system testing and

commissioning. Notify the COR 48 hrs prior to performing an operational test. The Contractor shall submit a CFR after operational test.

3.8 Witnessing Tests. The Coast Guard reserves the right to witness any or all tests performed. The Contractor shall maintain records of all tests.

3.9 Disposition of Material

3.9.1 Material below is considered MTI and shall be returned to the COR.

19" Monitor PN: JH19T14MMD-AA1-AOAA
15" Monitor PN: JH15T17MMD-AA1-AAAA
Trackball PN: 610-0032
Keyboard PN: PN: 591-0032

3.9.2 Submit a CFR to the COR stating the MTI material listed in paragraph 3.7.1 was transferred to the COR.

3.9.3 Before any material is removed from the ship, ensure the Rutter certified Technical Representative has custody of the old Ice RADAR RSI Card. Submit CFR to the COR stating the RSI card was transferred to the technical representative.

3.9.4 Dispose of material in accordance with local, state and federal laws and statues.

3.10 Touch-up preservation. The Contractor must prepare and coat all new and disturbed surfaces to match existing adjacent surfaces in accordance with SFLC Std Spec 6310, paragraph 3.1.13 (Touch-ups and minor coating repairs).

4. NOTES

None.

WORK ITEM 8: Impressed Current Cathodic Protection, Upgrade

1. SCOPE

1.1 Intent. This work item describes the requirements for the Contractor to perform the removal, fabrication, and installation of the new Aquamarine 4 system components in Table 1.

TABLE 1 – SYSTEM LOCATION AND PART INFORMATION

SERVICE/LOCATION	COMPONENT NAME	P/N
Refrigeration Machinery Room 3-33-0-E	Power Supply, 300Amp	AQ4-300/36
Main Motor Room Upper Level 4-102-0-E	Power Supply, 300Amp	AQ4-300/36
Refrigeration Machinery Room 3-33-0-E	Remote Administrative Display (RAD)	AQ4-RAD-ASSY
Main Motor Room Upper Level 4-102-0-E	Remote Administrative Display (RAD)	AQ4-RAD-ASSY

1.2 Government-furnished property.

TABLE 2 – GOVERNMENT FURNISHED EQUIPMENT

MTI	ITEM DESCRIPTION	NSN/PN	QTY	ESTIMATED COST ($/UNIT)
Y	Power Supply Unit, 300 Amp	N/A	6	$25,250
Y	Remote Administrative Display (RAD)	N/A	2	$3,500

2. REFERENCES

COAST GUARD DRAWINGS

Coast Guard Drawing 420-WAGB-180-003, Rev. H, Mechanical & Electrical Foundation Arrangement

Coast Guard Drawing 420-WAGB-200-001, Rev. G, Machinery Arrangement for Motor Room, Aux Machinery Rooms, Generator Room, Boiler Room, and Forward & Aft Machinery Spaces

Coast Guard Drawing 420-WAGB-430-001, Rev. H, General Arrangement of Elec Equipment in IC Equipment Room

Coast Guard Drawing 420-WAGB-633-002, Rev. D, Elementary & Isometric Cathodic Protection Wiring Diagram

Coast Guard Drawing 420-WAGB-320-002, Rev. BA, Power System One-Line Diagram

COAST GUARD PUBLICATIONS

Coast Guard Technical Publication (TP) System 5274, SWBS 633, Impressed Current Cathodic Protection System

Surface Forces Logistics Center Standard Specification 0000, (SFLC Std Spec 0000) 2022 Edition, General Requirements

Surface Forces Logistics Center Standard Specification 6310, (SFLC Std Spec 6310) 2022 Edition, Requirements for Preservation of Ship Structures

OTHER REFERENCES

Wilson Walton Ver. 2306, Aquamatic 4 Impressed Current Cathodic Protection Installation and Operation Manual for Power Unit & Remote Display

3. REQUIREMENTS

3.1 General.

3.1.1 CIR.

None.

3.1.2 Tech Rep. The Contractor must provide the services of an OEM (Wilson Walton International, Wall, NJ) authorized Tech Rep for the impressed current cathodic protection (ICCP) system to accomplish the following on site:

- Provide manufacturer's proprietary system/ equipment information, software, and tools.
- Assist with and ensure compliance with manufacturer's procedures and standards during disassembly, inspection, repair, modification, calibration, and reassembly of the equipment/system.

3.1.2.1 Ensure the Tech Rep is an experienced OEM Representative for impressed current cathodic protection (ICCP) systems as demonstrated by the experience on their résumé.

3.1.3 Protective measures. The Contractor must furnish and install all protective measures in accordance with SFLC Std Spec 0000, paragraph 3.3.3 (Vessel component, space, and equipment protection).

3.1.4 Interferences. The Contractor shall handle all interferences in accordance with SFLC Std Spec 0000, paragraph 3.3.5 (Interferences). Known interferences include, but are not limited to the following:

- Insulation
- Piping
- Bulkhead framing
- Wire runs

NOTE

Coast Guard personnel will operate all shipboard machinery and equipment.

3.2 Operational test - initial. Prior to commencement of work, the Contractor shall witness Coast Guard personnel perform an initial operational test of the existing cathodic protection system to demonstrate existing operational condition. Submit a CFR.

CAUTION

Adhere to work control requirements of SFLC Std Spec 0000, section 3.3 when taking measurements on energized equipment.

3.2.1 Read and record the operational data available at the display terminal for each reference cell, shaft potential, anode current, and output voltage. Log any diagnostic messages.

3.2.2 Verify each reference cell voltage at its connection to the power supply. Acceptable cell inputs at the power supply connection would be between +125 mV and 250 mV, in accordance with the Aquamatic 4 technical manual, section 3.2.

3.2.3 Verify voltage and current measured at the output to the anodes matches the displayed output, and that measured and displayed are within nominal parameters based on TP 5274.

3.2.4 Record calibration data for any measurement tools used.

3.3 Equipment removals. The Contractor must remove the existing Power Supplies and Remote Administrative Display (RAD), and cables specified in the sub-paragraphs which will not be reused, while inspecting and retaining those which will be used in the new configuration.

3.3.1 The contractor must inspect all cabling in the existing installation, and attach wire labels to those which are not already clearly labelled according to drawing 420-WAGB-633-002. Create a wiring diagram for the existing connections using drawings from TP 5274. Submit a CFR.

3.3.2 Remove the existing (x2) 750 A power supplies, leaving all existing cabling in place.

3.3.3 Remove the RAD from the IC Gyro.

3.3.4 The COR, in consultation with the KO, will provide direction on disposition of the removed equipment.

3.4 Fabricate structural and ancillary components. The Contractor must fabricate a junction box which includes terminal block suitable for 10x 75A anode cables, and a structural foundation supporting 3x Aquamatic 4, 36V/300A power supplies, in accordance with drawings 420-WAGB-200-001, 420-WAGB-633-002, and OEM installation recommendations included in the Aquamatic tech manual.

3.4.1 Terminal boards must be Phoenix Contact PTPOWER 50-F, or equivalent UL 1059 listed product. Hydraulically or mechanically crimp conductor terminals with a ferrule sized for 1/0 conductor, or tin the terminals with in accordance with MIL-STD-2003-5B, Appendix 5A.

3.4.2 Junction box stuffing tubes must conform to ASTM standard F1836M, and be sized appropriately for LSSSGU-100 cable.

3.4.3 Fabricate and install the structural foundation for 3 power supplies at the location of each existing power supply in accordance with Coast Guard Drawing 420-WAGB-180-003, sheets 29, 29A, 32, and 32A.

3.4.3.1 All welding must be conducted in accordance with SFLC Std Spec 0740, by welders with documented certifications in accordance with section 3.1.3 of the Std Spec.

3.4.4 Attach brackets to the power supply mounting frame suitable for mounting a power distribution panel and junction box. Junction box must be mounted below the power supplies for extension of the anode cables

3.4.5 Conduct structural installation inspections and NDE in accordance with SFLC Std Spec 0740 with the Coast Guard Inspector. The NDE must include VT and either PT or MT. Submit a CFR with configuration and inspection result for all structural and ancillary components required to be fabricated.

3.5 Power supply distribution panels. The Contractor must assemble a distribution panel suitable for 450 VAC 3-phase, 3-wire distribution, with one main breaker and distribution blocks for minimum of 4x 30A loads. Panel and internal hardware must be rated for a minimum of 100A. Main breaker trip must be set at 60A.

3.5.1 Breakers supplied for this purpose must be UL 489 listed, with a interrupt rating minimum of 25 kA symmetric. Distribution panel may be a standard product in serial production by a major electrical manufacturer, or otherwise must be custom-assembled by a UL 508 listed panel shop.

3.5.1.1 The main breaker handle must be able to be operated without opening the enclosure. All uninsulated components and terminals must be otherwise fully inside the enclosure.

3.5.2 Install the new power distribution panel on a bracket installed on the power supply support structure for this purpose, in a location where the existing 3-phase power supply branch circuit can be connected to the main connection of the distribution panel.

3.5.3 Stuffing tubes for the power distribution panel must conform to ASTM standard F1836M.

3.5.4 Provide drawing for the distribution panel, mounting bracket, and final assembly inspection report to the Coast Guard Inspector via CFR.

3.6 Power supply and Remote Administrative Display installation. The Contractor must install the new AQ4 Power Panels and RAD in each location listed in Table 1. Contractor must provide new stainless-steel hardware for mounting. If any installation issues arise which causes deviation from the drawings or this specification, make corrections as needed and submit a CFR, including drawing redlines as necessary, with deviations.

3.6.1 Connect each power supply to the distribution block on the distribution panel using new LSTSGU-9 cable.

3.6.2 Connect grounding cables for each power supply (3x forward, 3x aft) in accordance with the requirements of Aquamatic technical manual, section 2.2.

3.6.2.1 Connect grounding cable from hull to unit terminal marked, "POWER GROUND". Cable lug to hull connection must be brazed to the hull. Under supervision of the Coast Guard Inspector, measure resistance of grounding cable from power supply terminal to the hull. Submit a CFR.

3.6.2.2 Connect a stranded single-conductor cable from hull to unit terminal marked “CONTROL GROUND.” Hull connection must be brazed. Under supervision of the Coast Guard Inspector, measure resistance of the grounding cable from terminal connection to the hull. Submit a CFR.

3.6.3 Connect existing anode cables to the junction box. Connect new LSSSGU-100 cable between the junction box and the anode outputs for each power supply in accordance with drawing 420-WAGB-633-002.

3.6.4 Connect existing reference cell cables to reference cell inputs on one power supply, with the shields for each cable grounded at the “CONTROL GROUND” terminal of one power supply. The shield must not be connected anywhere else.

3.6.4.1 Use new LS2SJ-14 cable to connect reference cell input terminals of the other two power supplies in each group of three. Connect shields to the “CONTROL GROUND” terminal of each power supply to the shield of the jumper cabling providing reference cell input, and must not be connected anywhere else. Using the LS2SJ-14 cable requires that both conductors of the cable be connected to the same input terminal, and both conductors must be crimped to a suitably sized ring terminal.

3.6.5 Connect shaft grounding cables to terminals marked “Shaft 1” and “Shaft 2” on one power supply in the aft installation.

3.6.6 <u>Remote Administrative Display</u>. The Contractor must install one RAD for each grouping of three power supplies.

3.6.6.1 Mount RAD to a bulkhead in the same space as the power supplies, within convenient distance to 120 VAC, single-phase receptacle using welded studs or other classification-society type approved suitably robust chemical bonding method for attachment of stand-offs. Do not mount the RAD to tank boundaries. Submit a CFR with details of the exact location for RAD mounting.

3.6.6.1.1 Ensure 120 VAC power cable for the RAD is installed, and long enough to be plugged into its intended receptacle without cable strain.

3.6.6.2 Connect new, shielded data cable of LS2SJ-14 type from RAD “DATA 1” terminals to “DATA 1” terminals on one power supply, then from “DATA 2” terminals on that power supply to “DATA 1” on the next. Repeat the pattern for the last power supply in the group of three. Connect data cable shield at terminal 3 (“EARTH”) on the RAD terminal board, and connect the shields together for those data cables which are connected at the power supplies.

3.6.6.2.1 The Tech Rep must determine and provide correct polarity for data terminals. Mark the polarity inside the enclosure referenced to the terminal numbers at a location which would be visible to a maintenance technician when the enclosure is open for service.

3.6.7 Conduct electrical and power supply mounting inspections with the Coast Guard Inspector and Tech Rep. Submit a CFR.

3.7 AQ4 Commissioning/Calibration. The Tech Rep must oversee initial energization and post-install operational test of the cathodic protection system, conducted in accordance with the OEM tech manual.

NOTE

Coast Guard personnel will operate all shipboard machinery and equipment.

3.8 Operational test, post repairs. After completion of work, the Contractor must thoroughly test, in the presence of the Coast Guard Inspector and demonstrate the operation of the ICCP system and any other systems that have been disturbed, used, repaired, altered, or installed to be in satisfactory operating condition. Submit a CFR.

3.8.1 Ensure data is received from each power supply by cycling through “DATA SELECT” on the RAD for each power supply group. Document received parameters for all data received.

3.9 Deliverables. Contractor shall provide electrical and mechanical redline drawings of the new installation within 60 days after the completion of work.

3.10 Touch-up preservation. The Contractor must prepare and coat all new and disturbed surfaces to match existing adjacent surfaces in accordance with SFLC Std Spec 6310, (Touch-ups and minor coating repairs).

4. NOTES

This section is not applicable to this work item.

WORK ITEM 9: Oceanographic Winch, Inspect and Test

1. SCOPE

1.1 Intent. This work item describes the requirements for the Contractor to inspect, service and test the Oceanographic Winches listed in Table 1.

TABLE 1 – LIST OF EQUIPMENT

COMPONENT IDENTIFICATION NO.	MANUFACTURER	MODEL NUMBER	LOCATION
No. 1 Oceanographic Winch	InterOcean Systems, LLC	10628	Winch Room (2-135-0-E)
No. 2 Oceanographic Winch	InterOcean Systems, LLC	10628	Winch Room (2-135-0-E)

1.2 Government-furnished property.

None.

2. REFERENCES

COAST GUARD DRAWINGS

Coast Guard Drawing 420-WAGB_591_501, Rev E, Winch Assembly Oceanographic

Coast Guard Drawing 420-WAGB_801_1, Rev K, Booklet of General Drawings

COAST GUARD PUBLICATIONS

Coast Guard Technical Publication (TP) 5262, SWBS 591, March 2023, Science Winch, Model 10628 Oceanographic, Model 71217 Trawl/Core Mechanical System & Wire Handling (Volume 1)

Coast Guard Technical Publication (TP) 5263, SWBS 591, Nov 2003, SG813-HP-MMC - Science Winch, Mechanical System & Wire Handling (Volume 2)

Surface Forces Logistics Center Standard Specification 0000 (SFLC Std Spec 0000), 2022, General Requirements

Surface Forces Logistics Center Standard Specification 5000 (SFLC Std Spec 5000), 2022, Auxiliary Machine Systems

Surface Forces Logistics Center Standard Specification 6310 (SFLC Std Spec 6310), 2022, Requirements for Preservation of Ship Structures

OTHER REFERENCES

None

3. REQUIREMENTS

3.1 General.

3.1.1 CIR. The Contractor must submit a CIR for the inspections listed in the following paragraph(s):

- 3.2.1 Operational test, initial.

3.1.2 Tech Rep. The Contractor must provide the services of a Tech Rep who is familiar with the Oceanographic winches, to accomplish the following tasks – on site. The Technical Representative must be present for all critical phases of the work such as disassembly and reassembly stages for removal, inspection, renewing or repairing, installing, testing and calibrating each winch's components:

- Provide manufacturer's proprietary information, software, and tools pertinent to the equipment/system.
- Assist with proper repair methods and ensure compliance with manufacturer's procedures and standards during disassembly, inspection, repair, modification, calibration, and reassembly of the equipment/system.
- Observe Load Testing of the Winch Assemblies.
- Provide Test Rope for Load Testing of Winches.

3.1.2.1 The Contractor must ensure that the Tech Rep is a certified representative of InterOcean Systems, LLC, 9201 Isaac St Suite C, Santee, CA. 92071; Ph: (858) 565-8400.

3.1.2.2 The Contractor must submit the name of the Tech Rep to the COR at the Arrival Conference.

3.1.3 Protective measures. The Contractor must furnish and install all protective measures in accordance with SFLC Std Spec 0000, paragraph 3.3.3 (Vessel component, space, and equipment protection.

3.1.4 Interferences. The Contractor must handle all interferences in accordance with SFLC Std Spec 0000, paragraph 3.3.5 (Interferences). Known interferences include, but are not limited to, the following:

- Cable – 10,000 meters

3.2 Oceanographic Winch Inspection. The Contractor must perform the following for the equipment listed in Table 1.

NOTE

Coast Guard personnel will operate all shipboard machinery and equipment.

3.2.1 Operational test, initial. Prior to commencement of work, the Contractor must witness Coast Guard personnel perform an initial operational test to demonstrate existing operational condition and inspect in accordance with Paragraph 3.2.1 and Appendix A of SFLC Std Spec 5000. Submit a CIR.

3.2.2 Cable. The Contractor must perform the following in accordance with CG TP 5262 and 5263.

3.2.2.1 Provide the appropriate test equipment and conduct a baseline Time Domain Reflectometer (TDR) cable test and Insulation Resistance test on the cable prior to unspooling. The test equipment must have the ability to test long transmission cables. Submit CFR with results.

3.2.2.2 The Contractor must remove, clean, inspect, and respool the cable. The cable must be thoroughly cleaned using CG TP 5262, Section 6, as guidance prior to the inspection. Dispose of all cleaning fluids in accordance with local, state, and federal regulations. Submit a CFR.

3.2.2.3 The Contractor must lubricate the cable in accordance with CG TP 5262, Section 6.

3.2.2.4 The Contractor must install the cable as directed by the Technical Representative. Cable must be installed in such a manner that there is no possibility of twists or crossing in the cable. This cable can only be mounted with an over-wound spool; all other methods are unacceptable. Submit a spooling plan via CFR for approval prior to commencing work.

3.2.2.5 The Contractor must clean and inspect each of the sheave assemblies. Measure the sheave wear. Note any indications of pin wear or bearing failure. Reassemble each of the sheave assemblies.

3.2.2.6 The Contractor must perform a TDR cable test and Insulation Resistance test of the cable after respooling. Submit CFR with test results.

3.2.3 Winch Gear Boxes.

Note

The maximum acceptable level of contamination per SFLC Std Spec 5000 is ISO4406 20/18/15 with water content <500ppm (0.5%bv).

3.2.3.1 The Contractor must drain the gearbox and dispose of the used oil in accordance with all applicable Federal, State, and local laws and regulations. In the presence of the Coast Guard Inspector, take a sample of the used oil and send it out for spectrographic analysis. Submit a CFR with the results of the oil spectrographic analysis.

3.2.3.2 The Contractor must open any inspection covers and inspect the gears inside of the gearbox in accordance with CG TP 5263. Renew inspection cover gasket(s).

3.2.3.3 The Contractor must provide and refill the gearbox in accordance with CG TP 5263, Paragraph 2.3.3.

3.2.4 Brakes. The Contractor must inspect and conduct maintenance on the following:

3.2.4.1 Mechanical. Disassemble the brake as required to access the brake linings. Conduct a visual inspection of all components. Remove any glaze and make the brake lining fit for continued service. Submit a CFR. Reassemble the mechanical brake in accordance with CG Tech Pub 5263 as guidance.

3.2.4.2 Electro-mechanical. Inspect using the procedures outlined in CG Tech Pub 5263 Section 6 Stearns Brake, paragraph III.C “Self-adjust maintenance. Submit CFR.

3.2.5 Groom and lubricate. After completion of all maintenance and repair work, the Contractor must “groom and lubricate” the entire system in accordance with SLFC Std Spec 5000 Paragraph 3.2.6.

3.2.6 Shuttle automatic lube system. The Contractor must provide and renew the Grease Ram Pumps on the #1 and #2 Winch auto lube systems. Pump details are in CG Tech Pub 5263 Section 9 (Drawing/Parts List) Section 9, Item #11.

3.2.6.1 Disassemble, inspect, and remove all grease from the automatic lube system, flush all debris from the lubrication lines. Reassemble and fill the Shuttle auto lube system in accordance with CG TP 5263 Section 7.

3.3 Operational test, post repairs. After completion of work, the Contactor must witness Coast Guard personnel conduct a thorough test, in all modes of operation, to demonstrate the equipment listed in Table 1 to be in satisfactory operating condition in accordance with Paragraph B2.3 of SFLC Std Spec 5000, and CG TP 5263. Submit a CFR.

3.4 Label plate. The Contractor must provide and install a label plate to the equipment listed in Table 1 to document satisfactory test completion in accordance with SFLC Std Spec 5000, Appendix B, Paragraph B2.9 (Label Plates):

3.5 Touch-up preservation. The Contractor must prepare and coat all new and disturbed surfaces to match existing adjacent surfaces in accordance with SFLC Std Spec 6310, paragraph 3.1.13 (Touch-ups and minor coating repairs.)

4. NOTES

This section is not applicable to this work item.

59100_BEC_0325_20

WORK ITEM 10: Scientific and Ocean Engineering Systems, Control System Groom and Indicator Calibration

1. SCOPE

1.1 Intent. This work item describes the requirements for the Contractor to groom control systems, validate output, and calibrate sensors for instrumented science winch systems.

1.2 Government-furnished property.

None.

2. REFERENCES

COAST GUARD DRAWINGS

Coast Guard Drawing 420-WAGB-591-551 Overall Block Diagram Science Winch Control Diagram

Coast Guard Drawing 420-WAGB-591-521 Remote VDT Console

Coast Guard Drawing 420-WAGB-591-550 Trawl/Core Winch Drives

Coast Guard Drawing 420-WAGB-591-549 Oceanographic Winch Drives 1 & 2

COAST GUARD PUBLICATIONS

Coast Guard Technical Publication 9233 (TP 9233), Science Winch Drives and Control System, SWBS 591, May 2023

Surface Forces Logistics Center Standard Specification 0000 (SFLC Std Spec 0000), 2022, General Requirements

Surface Forces Logistics Center Standard Specification 5000 (SFLC Std Spec 0000), 2022, Auxiliary Machine Systems

OTHER REFERENCES

Rugged Controls RPC-90x Programmable Controller Operations and Maintenance Manual

3. REQUIREMENTS

3.1 General.

3.1.1 CIR. The Contractor must submit a CIR for the inspections listed in the following paragraph(s):

None.

3.1.2 Tech Rep. The Contractor must provide the services of a Qualified Technical Representative who is familiar with programmable winch and deck equipment controllers and sensors, specifically the RPC-90x programmable controller manufactured by Rugged Controls.

3.1.2.1 Ensure the Tech Rep has experience with the system/equipment stated above and demonstrated on their résumé.

3.1.2.2 Submit the name and résumé of the Tech Rep to the COR at the Arrival Conference.

3.1.3 WI execution sequence. The Contract must execute this work item simultaneously WI 11: Oceanographic Winch, Inspect and Test and WI 49: Trawl/Core Winch, Inspect and Test, because it may require consultation with the InterOcean tech rep.

NOTE

Coast Guard personnel will operate all shipboard machinery and equipment.

3.1.4 Test plan. The Contractor's Tech Rep must develop a test plan to conduct operational testing before and after the groom and calibration procedures, and gain concurrence of the InterOcean Tech Rep for concurrent execution with the inspect and test procedures, and record the results. Submit a CFR.

3.1.5 Groom plan. The Contractor must develop a plan to inspect and verify operation of power supplies, wire connections, sensors, contactors, solenoids, joysticks, and drives, and record the results. Submit a CFR.

3.2 Operational test, initial. Prior to commencement of work, the Contractor must witness Coast Guard personnel perform an initial operational test of the equipment listed below to demonstrate existing operational condition. Submit a CFR.

- Trawl/Core Winch
- Oceanographic Winch #1
- Oceanographic Winch #2

3.2.1 The Contractor must monitor the status of sensors from local and remote control stations for indications. This may require operation of each winch through several cycles while the sensor data is monitored from different locations.

3.3 Control system groom. The Contractor must execute the control system groom plan as agreed with the COR and winch system OEM Tech Rep. The groom must include at a minimum the subparagraphs of this section.

3.3.1 Verify speed of each winch and instrumented sheave, at various speeds throughout the range of speeds of the winch motor. Measure frequency output of the drive while operating the winch motor.

3.3.2 Check voltage output and adjust where output is outside 10% of nominal voltage. If power supply output is not adjustable, note measurement, location, part number, and designation for any power supply which should be replaced. Submit a CFR.

3.3.3 Measure output of joysticks and ensure controllers and displays correspond to the commanded input of the joystick.

3.3.4 Inspect all wiring connections for tightness in local control panels and drive cabinets.

3.3.5 Vacuum dust from local control panels and drive cabinets.

3.3.6 Verify transfer of control between control stations and accurate display of data during operation.

3.3.7 Verify motor protection settings for winch motors are set according to nameplate values.

3.3.8 Monitor for heating of drive components during operation.

3.3.9 Check accurate display of all alarms on operator consoles.

3.3.10 Verify operation of any indicator lights and alarms.

3.3.11 Verify operation and accurate for the system to all emergency stops.

3.3.12 Verify operation of all interlocks.

CAUTION

CALIBRATION OF LOAD CELLS MAY REQUIRE OPERATION OF SYSTEMS UNDER WIRE TENSION. SHEAVES AND WINCH DRUMS MUST NOT BE OVERLOADED.

3.4 Sensor calibration. The Contractor must calibrate the display and output of all speed sensors, load cells, control indicators, line speed, line tension, and line scope. Submit a CFR.

3.4.1 Engineering units within the RPC-90x controller must be adjusted if necessary to match actual load and the output of the installed sensors within 5% of actual. Controller OEM guidance must be adhered do in this adjustment process.

3.4.2 Ensure loading devices, tachometers, meters, and all calibration instrumentation used by the Contractor are calibrated within one year of the execution of this WI. Submit calibration dates.

3.4.3 Record actual load, speed, or other parameter measured, starting error, and final error (after calibration) on a test sheet and include in the CFR submission.

3.4.4 Verify indication data are accurately repeated and displayed to all operating stations.

3.4.5 Simulate alarm conditions and verify output and display of alarms are accurate for all stations.

3.5 Operational test, post repairs. After completion of work and in the presence of the Coast Guard Inspector, the Contractor must thoroughly test and demonstrate the equipment listed below to be in satisfactory operating condition. Submit a CFR.

- Trawl/Core Winch
- Oceanographic Winch #1
- Oceanographic Winch #2

3.6 Restoration. Ensure any maintenance settings and conditions configured for calibration and groom are reversed, and system is left in fully operational condition with all installed safeties configured for normal operations.

4. NOTES

This section is not applicable to this work item.

WORK ITEM 11: Damage Control and Firefighting Systems, PMS

1. SCOPE

1.1 Intent. This work item describes the requirements for the Contractor to perform preventive maintenance to various damage control and firefighting systems, including fixed and portable CO2, APC, PKP, & SCBA equipment.

NOTE
Work Item XX: Fire Prevention, Provide discusses how to mitigate fire risk when portions of the firefighting system have been removed or are offline

1.2 Government-furnished property.

None.

2. REFERENCES

COAST GUARD DRAWINGS

Coast Guard Drawing 420 WAGB 671-002, Rev D, CO2 Room

Coast Guard Drawing FL-1204-3, Rev A, Fleet Welded Padeyes and Links

COAST GUARD PUBLICATIONS

Coast Guard Technical Publication (TP) 5150, 2003, S6161-U4-FSE-010 Grease Interceptor Hood with MGPC-4000-S-2 Control Cabinet.

Coast Guard Technical Publication (TP) 5200, S6220-B4-MMC-010, Compressor, High Pressure Breathing Air, Model K15-E3

Coast Guard Technical Publication (TP) S9555-CH-MMA-010, 2008, AFFF Firefighting Hose Reels – Models NL20MB, NL20M-200B

Coast Guard Technical Publication (TP) 5207, S9555-DM-MMC-010, Fire Extinguishing System, High Pressure Carbon Dioxide

Coast Guard Technical Publication (TP) 5502, 2020, Fire Suppression System - Model WHDR

Surface Forces Logistics Center Standard Specification 0000 (SFLC Std Spec 0000), 2022, General Requirements

Surface Forces Logistics Center Standard Specification 0740, (SFLC Std Spec 0740) 2022 Edition, Welding and Allied Processes

Surface Forces Logistics Center Standard Specification 3041 (SFLC Std Spec 3041), 2022, Shipboard Electrical Cable Test

Surface Forces Logistics Center Standard Specification 3042 (SFLC Std Spec 3042), 2022, Shipboard Electrical Cable Removal, Relocation, Splice, Repair, and Installation

Surface Forces Logistics Center Standard Specification 5000 (SFLC Std Spec 5000), 2022, Auxiliary Machine Systems

OTHER REFERENCES

Amerex Inspection, Maintenance, and Recharge Service manual NO. 13259

National Fire Protection Association standard NFPA-10 (Portable Fire Extinguishers)

3. REQUIREMENTS

3.1 General.

3.1.1 CIR.

None.

3.1.2 Tech Rep.

Not Applicable.

3.1.3 Protective measures - general. The Contractor must furnish and install all protective measures in accordance with SFLC Std Spec 0000, paragraph 3.3.3 (Vessel component, space, and equipment protection).

3.1.4 Interferences. The Contractor must handle all interferences in accordance with SFLC Std Spec 0000, (Interferences). Known interferences include, but are not limited to the following:

- Overhead panels
- Protective coverings
- Ventilation ducting
- Deck plates

3.1.5 Calibration. In addition to the instrumentation requirements in Paragraph 3.2.6.1.2 of SFLC Std Spec 0000, the Contractor must maintain a copy of the calibration records on site with the tools for inspection throughout this work item.

3.1.6 Electrical Work. The Contractor must accomplish all electrical work in accordance with SFLC Std Spec 3042 and test cables in accordance with SFLC Std Spec 3041. Utilize the existing wire ways for new cable runs as much as possible.

3.1.7 Rigging. The Contractor is responsible for all rigging with the following considerations:

3.1.7.1 All existing padeyes that will be used for a lift must be pull tested to 1.5 times their Working Load Limit in accordance with SFLC Standard Spec 5000 Paragraph 3.2.7. All testing must occur in the presence of a Coast Guard Inspector.

3.1.7.2. If new padeyes are required, fabricate them in accordance with Coast Guard Drawing FL-1204-3 and SFLC Standard Spec 0740. Newly fabricated padeyes must be pull tested to 2 times their Working Load Limit in accordance with SFLC Standard Spec 5000 Paragraph 3.2.7. All testing must occur in the presence of a Coast Guard Inspector.

3.1.7.3. Upon completion of testing, install a label plate in accordance with SFLC Standard Spec 5000 Paragraph B2.9.

NOTE

Coast Guard personnel will operate all shipboard machinery and equipment.

3.2 Operational test, initial. Prior to commencement of work, the Contractor must witness Coast Guard personnel perform an initial operational test of all items or shipboard devices to be disturbed, used, repaired, or altered, to demonstrate existing operational condition. Submit a CFR.

3.3 Galley Range Fire Equipment. The Contractor must accomplish the following tasking for the range fire protection equipment in the Galley. Coordinate the work with the COR to minimize the amount of downtime with the Galley.

3.3.1 Clean the Grease Interceptor Hood and the associated piping for the WHDR Wet Chemical fire suppression system above the cooking range to bare metal. Remove grease, carbon and any other build up while also protecting the range itself.

3.3.2. WHDR Wet Chemical Fire Suppression System. Complete the following tasks referencing TP 5502

3.3.2.1. System Activation Components. Check all activation components in galley and COs pantry and submit a CFR.

3.3.2.2. Conduct the Semi-Annual Service Procedure listed in Paragraph 5-2.2 of TP 5502 for the XV control system. 3.3.2.3. The Contractor must replace up to two APC system cylinders and Two nitrogen activation cartridges and all associated seals an o-rings in accordance with TP 5502.

3.3.3. Grease Interceptor Hood. The Contractor must complete the following tasks referencing TP 5150

3.3.3.1 The Contractor must complete the “Every Six Months” maintenance – on Page 5 of TP 5150. Submit a CFR documenting the work.

3.3.3.2. The Contractor must complete the preventative maintenance of the detergent pump shown on Page 6 of TP 5150. Submit a CFR.

3.3.3.3. The Contractor must test the Gaylord grease extractor hoods with HVAC Fire dampeners in all modes of operation and from each actuation pull station in accordance with the TP 5150 and in the presence of a Coast Guard Inspector. Ensure that all HVAC fire dampeners close, supply and exhaust fan

motors secure, internal hood sprinkler wash system activates and auxiliary desmoke dampeners open when remotely activated. Upon completion of testing, reset all dampeners and restore system to its normal operating condition. Submit a CFR with test results to the COR.

3.4 **Hoses and Reels**. The Contractor must accomplish the following work:

3.4.1. The Contractor must conduct these tests in such a way that there is always a hose in service on each firefighting station.

3.4.2. 1-1/2, 1-3/4 & 2-1/2 inch Fire Hoses. The Contractor must perform the following tests on 248 x 1-1/2 & 1-3/4 hoses and 14 x 2-1/2 hoses (See TABLE 1).

- Inspect inner and outer jacket for chafing, cuts and other damage. Note hoses where chafing on outer jacket encircles the hose, and do not use these for testing.
- Draw a reference mark around the circumference of the hose at each end where the outer liner meets the coupling.
- With a fire nozzle at the end of each hose, pressurize each hose to 100 psi and exercise fire nozzle. Check nozzle and hose for leaks, then increase to 300 psi for 5 minutes.
- Note any leaks, permanent set of the hose or other damage.
- White out the old hydrostatic test date with white spray paint and stencil in the new hydrostatic test date. The stencil must appear within three feet of the male end.
- Empty the residual water and dry the hoses prior to returning them to service.

3.4.3. AFFF Hose and Reel. The Contractor must perform the following on seven hose reals and 10 lengths of AFFF non-collapsable hose (see TABLE 2).

3.4.3.1. Hose Reel. Remove the hose to accomplish the following maintenance and reattach upon completion. See Chapter 7 of TP S9555-CH-MMA-010 for diagrams and parts list for the hose reel.

- Inspect mounting and flange bolts for tightness
- Inject two squeezes of utility grease (MIL-G-24139) into each hose reel/swing joint grease fitting. See Figure 1 for swivel joint assembly information.
- Inject one squeeze of utility grease (MIL-G-24139) into all other lubrication fittings
- After lubricating, rotate the hose reel to inspect for lubricant leaks and other issues.
- Renew hose coupling gaskets

3.4.3.2. AFFF Non-collapsable Hose.

- Inspect hose for chafing, gasket for tears and nozzle for damage. If the rubber is chafed down to bare reinforcement, then discard the hose and do not continue with the testing
- Draw a reference mark around the circumference of the hose at each end

where the outer liner meets the coupling.

- With a fire nozzle at the end of each hose, pressurize each hose to 100 psi and exercise fire nozzle. Check nozzle and hose for leaks, then increase to 300 psi for 5 minutes. This test is only required for hoses that have not been tested in the past three years. For bidding purposes, assume that 20 hoses need to be hydro tested.
- Note any leaks, permanent set of the hose or other damage.
- White out the old hydrostatic test date with white spray paint and stencil in the new hydrostatic test date. The stencil must appear within three feet of the male end.
- Empty the residual water and dry the hoses prior to returning them to service.

TABLE 1 – FIRE/AFFF FLEXIBLE HOSES (NYLON JACKETED)

ITEM #	SPACE	QTY 1½" & 1¾" HOSES	QTY OF 2½" HOSES	REMARKS
1	01 Weather Deck	20	-	-
2	02 Weather Deck	14	-	-
3	04 Weather Deck	6	-	-
4	05 Weather Deck	4	-	-
5	Main Weather Deck (Fantail)	8	-	-
6	Repair II	4	2	-
7	Repair III	5	2	-
8	P-100's in Vestibule/Arctic Gear Locker 1-120-2-Q	4	2	-
9	Gen Room #1 (1-80-1-E)	6	-	-
10	Gen Room #2 (1-80-2-E)	4	-	-
11	Passageway (1-105-01-L)	4	-	-
12	Bio Chem Lab (1-105-3-Q)	2	-	-
13	Staging Area (1-123-1-Q)	2	-	-
14	Main Lab (1-117-0-Q)	2	-	-

USCGC HEALY (WAGB-420) DOCKSIDE AVAILABILITY FY2027

15	Dry Assembly Area (1-129-1-Q)	2	-	-
16	Passageway (01-23-0-L)	6	-	-
17	Passageway (01-117-4-L)	2	-	-
18	Passageway (02-35-0-L)	4	-	-
19	Helo Hangar (02-96-0-Q)	6	-	-
20	Passageway (03-35-2-L)	2	-	-
21	Aux Generator Room (03-65-0-E)	4	-	-
22	Passageway (03-48-0-L)	2	-	-
23	Passageway (03-61-2-L)	2	-	-
24	Passageway (04-38-0-L)	4	-	-
25	DC Shop	27	-	-
26	AMR # 1 (4-63-0-E)	4	-	-
27	AMR #2 (4-75-0-E)	4	-	-
28	AMR #3 (4-84-0-E)	3	-	-
29	AMR #4 (4-93-0-E)	4	-	-
30	Motor Room (4-102-0-E)	4	-	-
31	Dry Stores (3-21-0-A)	2	-	-
32	Refrig. Machinery Room (3-33-01-E)	2	-	-
33	JP5 Pump Room (3-117-0-E)	1	-	-
34	Scientific Cargo Hold #1 (3-126-0-AA)	2	-	-
35	Dry Stores (2-21-0-A)	2	-	-
36	Passageway (2-33-1-L)	2	-	-
37	Gym (2-33-0-L)	2	-	-

USCGC HEALY (WAGB-420) DOCKSIDE AVAILABILITY FY2027

38	Ship Stores (2-48-0-A)	4	-	-
39	AMR #5 (2-63-0-E)	3	-	-
40	AMR #6 (2-75-0-E)	1	-	-
41	AMR #7 (2-84-0-E)	2	-	-
42	AMR #8 (2-93-0-E)	4	-	-
43	Cycloconverter Room (2-102-0-E)	1	-	-
44	Passageway (2-117-2-L)	2	-	-
45	Passageway (2-126-2-L)	2	-	-
46	Winch Room (2-135-0-E)	2	-	-
47	Steering Gear Room (2-147-0-E)	4	-	-
48	Science Cargo #3 (2-126-0-A)	2	-	-
49	Port Transformer Room (2-102-2-E)	4	-	-
50	Deck Machinery Room (1-G-0-E)	2	-	-
51	Stores Handling Area (1-9-0-A)	4	-	-
52	Passageway (1-21-2-L)	2	-	-
53	Mess Deck (1-33-0-Q)	4	-	-
54	Passageway (1-48-0-L)	4	-	-
55	Boiler Room #1 (1-63-1-E)	3	-	2 hoses in Upper Level
56	Boiler Room #2 (1-65-2-E)	4	-	2 hoses in Upper Level
57	Passageway (1-63-3-L)	8	-	2 hoses inside Red Locker
58	Passageway (1-63-2-L)	4	-	-
59	P-100 Port 01 Wx Deck	2	1	-
60	P-100 Stbd Wx Deck	2	1	-
61	Extra	-	-	-

	TOTAL	**248**	**08**	**-**

TABLE 2 – AFFF flexible hoses (non-collapsible)

ITEM #	SPACE	QTY 1½" HOSES	REMARKS
1	Boiler Room #2 (1-63-1-E)	1	-
2	Boiler Room #2 (1-65-2-E)	1	-
3	AMR #1 (4-63-0-E)	1	-
4	Gen Room #1 (1-80-1-E)	2	-
5	Gen Room #2 (1-80-2-E)	2	-
6	Aux Generator Room (03-65-0-E)	1	-
7	Hangar (02-96-0-Q)	2	125 ft length
	TOTAL	**10**	

3.5 **Fixed CO2 Systems**. Use CG Drawing 420-WAGB-671-2 as guidance to see the original construction drawing indicating structural arrangements of CO2 systems, including weigh bar angles. See TABLEs 3-52 for listing of CO2 systems (summary in TABLE 52). The Contractor must inform the COR of testing at least 72 hours before conducting the test.

NOTES

Inspection of the bilge discharge nozzles requires the removal of deck plates. Uptake discharge nozzles require climbing vertical ladders and working over open spaces above the engine room. Some rigging may be required.

Some dampers are located in small areas and require climbing over and under ductwork.

There are no lifting eyes or installed systems to handle the CO_2 cylinders.

3.5.1. Pressure Switch Testing. The Contractor must test the pressure switches in accordance with Paragraph 7.5 of TP 5207 with the following adjustments to that procedure.

3.5.1.1. The Contractor must inform the COR 5 business days before conducting these tests.

3.5.1.2. All tests must occur in the presence of a Coast Guard Inspector

3.5.1.3. The Contractor must confirm that all ventilation and warning lamps activate appropriately.

3.5.3. Time Delay. The Contractor must test the time delay between actuating the system and discharge of CO2 as well as the pull handle weight for all pull handles. This may be accomplished in conjunction with pressure switch testing or separately at the Contractor's discretion.

3.5.4 Hydro Testing. The Contractor must hydro test or replace up to five hoses in accordance with Paragraph C2.2 of SFLC STD Spec 5000 and Chapter 7 of TP 5207, including their tags. If instructions conflict between TP 5207 and SFLC Std Spec 5000, then TP 5207 takes precedence. Hydro test up to twenty five cylinders.. Cylinders and hoses will be selected at the COR's discretion.

TABLE 3 - Generator Room #1 (1-80-1-E) Alarm Panels. (9 each)

Number	Location	Bulkhead/ Frame	Bell
C-FR4A4	Engine Room (1-80-2-E)	Starboard bulkhead 80	No
C-FR4A3	Engine Room (1-80-2-E)	Starboard bulkhead 103	No
C-FR8A1	ECC (01-105-0-C)	Starboard frame 106	No
C-FR4A5	Passageway 1-63-3-L	Frame 79	Yes
C-FR4A2	Main Deck at QAWTD 1-105-1		Yes
C-FR8A3	01 Deck starboard Quarter Deck		Yes
C-FR8A2	Fan space (01-107-1-Q)		No
C-FR8A4	Stair tower (2-43-1-T)		No
C-FR4A5	04 Deck Starboard Side		No

TABLE 4 – Generator Room #1 (1-80-1-E) Bells (3 each).

Number	Location	Bulkhead/ Frame
C-FR8B	01 Deck Starboard Quarter Deck	
C-FR4A2B	Main Deck at QAWTD 1-105-1	
C-FR4A5B	1-63-3-L	Frame 78 Starboard

TABLE 5 – Generator Room #1 (1-80-1-E) Strobe Lights in Space. (7 each)

Number	Location

C-FR4L2	Port Aft
C-FR4L (paint)	Starboard Aft
C-FR8L4	Port Frame 90
C-FR4L3	Port Forward
C-FR4L4	Starboard Forward
C-FR8L2	Starboard Frame 90
No number	Starboard Aft Frame 105

TABLE 6 – Generator Room #1 (1-80-1-E) Discharge nozzles located in space. (32 each)

Location
Center line frame 80
Center line frame 105
Starboard frame 91
Starboard frame 92
Starboard frame 93
Starboard frame 97
Port frame 84
Port frame 85
Port frame 90
Port frame 93

TABLE 7 – Generator Room #1 (1-80-1-E) Ventilation (dampers and resets)

Type	Damper location	Power reset location	Fan Location	System #	Damper #
Exhaust	04-86-0-Q	03-86-0-Q	04-86-0-Q	7	4
Exhaust	04-86-0-Q	03-86-0-Q	04-86-0-Q	6	5
Exhaust	04-86-0-Q	03-86-0-Q	04-86-0-Q	5	6

Supply	03-65-1-Q	03-87-0-Q	03-65-1-Q	25	13
Supply	03-65-1-Q	03-87-0-Q	03-65-1-Q	26	14
Supply	02-86-0-Q	02-86-0-Q	02-86-1-Q	24	20

TABLE 8 - Generator Room Number Two (1-80-2-E) ALARM PANELS. (9 each)

Number	Location	Bulkhead/ Frame	Bell
C-FR5A1	Passageway (1-105-01-L)	105 B	
C-FR5A2	1-63-2-L	78 F	Yes
C-FR4A5	Stair Tower (2-43-1-T0	48 B	
C-FR5A4	Engine Room (1-80-1-E)	Frame 83	
C-FR5A3	Engine Room (1-80-1-E)	Frame 102	
C-FR9A2	01-105-0-C	Frame 106	
C-FR9A1	Fan Space (01-107-2-Q)		
C-FR5A6	04 Deck Port Side		No
C-FR9A3	01 Deck port quarter Deck		Yes

TABLE 9 - Generator Room Number Two (1-80-2-E) Bells. (3 each)

Number	Location	Bulkhead/ Frame
C-FR5A2B	1-63-2-L	78 F
C-FR9B	01 Deck port quarter deck	
C-FR5A1B	1-105-01-L	Bulkhead 105

TABLE 10 - Generator Room Number Two (1-80-2-E) Strobe Lights in space. (7 each)

Number	Location
C-FR5L2	Port side Aft frame 79
C-FR5L1	Starboard Side Aft
C-FR9L2	Port Side Frame 90

C-FR5L4	Port Side Forward
C-FR5L3	Starboard Side Forward
C-FR9L3	Starboard Side Frame 90
No number	Port Aft frame 105

TABLE 11 - Generator Room Number Two (1-80-2-E) Discharge nozzles. (26 each)

Location
Centerline bulkhead 105
Centerline bulkhead 80
Starboard frame 102
Starboard frame 96
Starboard frame 88
Starboard frame 83
Port frame 84
Port frame 88
Port frame 93
Port frame 97

TABLE 12 - Generator Room Number Two (1-80-2-E) Discharge nozzles in stack space.

Location
04 deck 2 each
04 ½ deck 1 each
02 deck 2 each

TABLE 13 - Generator Room Number Two (1-80-2-E) Discharge nozzles in bilge.

Location
Frame 82, 86, 91, 95, 98 port and starboard

Frame 81 center

TABLE 14 - Generator Room Number Two (1-80-2-E) Pull Station locations. (4 each)

Space	Bulkhead/ Frame
ECC (01-105-0-C)	Port frame 105
Stair Tower (2-43-1-T)	
Locally in CO2 Room	
Secondary in Passageway	

TABLE 15 - Generator Room Number Two (1-80-2-E) Ventilation (dampers and resets)

Type	Damper location	Power reset location	Fan Location	System #	Damper #
Exhaust	04-86-0-Q	03-86-0-Q	04-86-0-Q	8	1
Exhaust	04-86-0-Q	03-86-0-Q	04-86-0-Q	9	2
Exhaust	04-86-0-Q	03-86-0-Q	04-86-0-Q	10	3
Supply	03-84-2-Q	03-86-0-Q	03-84-2-Q	27	15
Supply	03-65-1-Q	03-87-0-Q	03-65-1-Q	28	11
Supply	02-71-4-Q	03-86-0-Q	Port Stack Uptake. See note below	29	19

NOTE

Manhole cover in MDE/Boiler Intake Air Room. Manhole is bolted type-Not a confined space.

TABLE 16 - Generator Room Number Two (1-80-2-E) CO2 Pressure activated siren in space (2 each)

Location
Starboard forward frame 99
Starboard forward bulkhead 80

TABLE 17 - Generator Room Number Two (1-80-2-E) Horn/ Light alarms (4 each)

Number	Location	Bulkhead/ Frame
C-FR5L(1A)1	Stack 02 deck	Port frame 82
C-FR5L(1A)2	Aux generator air intake space	03-81-2-E
C-FR16L	AMR #6	Overhead
C-FR15L	AMR #3	Bulkhead 71
C-FR141	AMR#2 Lower level	At escape hatch

TABLE 18 - Aux Generator Room (3-65-0-E) Alarm Panels. (5 each)

Number	Location	Bulkhead/ Frame	Bell
C-FR10A4	Fan space (03-65-1-Q)		No
C-FR10A2	Passageway (03-63-0-L) Port	Bulkhead 65	Yes
C-FR10A1	Passageway(03-63-0-L) Starboard	Bulkhead 65	No
C-FR10A3	Aux Gen Air Intake (03-81-2-E)	Bulkhead 81	No
C-FR10A5	Stair Tower (2-43-1-T)		No

TABLE 19 - Aux Generator Room (3-65-0-E) Bell (1 each)

Number	Location	Bulkhead/ Frame
C-FR10B	Passageway (03-63-0-L)	Bulkhead 65 starboard

TABLE 20 - Aux Generator Room (3-65-0-E) Strobe Lights. (1 each)

Number	Location
C-FR10L1	Center of space 03-65-0-E

TABLE 21 - Aux Generator Room (3-65-0-E) Discharge nozzles. (9 each)

Location
Center line bulkhead 65 2 each
Centerline bulkhead 73
Center line bulkhead 81

Starboard frame 68
Starboard frame 74
Port bulkhead 65
Port frame 70
Port frame 74

TABLE 22 - Aux Generator Room (3-65-0-E) Pull Stations

Space	Bulkhead/ Frame
Passageway 03	63
Stair Tower 2	43
Locally in CO2 Room	
Secondary in Passageway (1-63-3-L)	

TABLE 23 - Aux Generator Room (3-65-0-E) Ventilation (dampers and resets)

Type	Damper location	Power reset location	Fan Location Motor #	
Exhaust	03-65-0-E	03-65-1-Q	03-65-0-E	22
Supply	03-65-1-E	03-65-1-E	03-65-1-E	21

TABLE 24 – Aux Generator Room (3-65-0-E) CO2 Pressure Activated Siren. (1 each)

location
Starboard side bulkhead 73 above fuel tank

TABLE 25 - Paint Locker (1-9-1-K) Alarm Panels. (2 each)

Number	Location	Bulkhead/ Frame	Bell
C-FR1A1	1-9-0-A	Starboard 14 F	Yes
C-FR1A2	Stair tower (2-43-1-T)		No

TABLE 26 - Paint Locker (1-9-1-K) Strobe Light. (1 each)

Number	Location	

C-FR1L1	1-9-1-K	Port frame 14

TABLE 27 - Paint Locker (1-9-1-K) Discharge Nozzles. (2 each)

Center line frame 14	Center line frame 10

TABLE 28 - Paint Locker (1-9-1-K) Pull Station locations

Space	Bulkhead/ Frame
Deck storeroom (1-9-0-A)	Starboard side frame 14
Stair Tower (2-43-1-T)	

TABLE 29 - Paint Locker (1-9-1-K) Ventilation (dampers and resets)

Type	Damper location	Power reset location	Fan Location Motor #	
Exhaust	1-9-0-A	01-42-2-Q	01-29-4-Q	91
Supply	1-9-0-A	01-42-2-Q	01-29-4-Q	56

TABLE 30 – Aux Generator Room (3-65-0-E) CO2 Pressure Activated Siren. (1 each)

location
Starboard side bulkhead 73 above fuel tank

TABLE 31 - Boiler Room #1 (1-65-1-E) Alarm Panels. (4 each)

Number	Location	Bulkhead/ Frame	Bell
C-FR6A1	Boiler Room #2 (1-65-2-E) upper level bulkhead 80		No
C-FR3A1	Boiler Room #2 (1-65-2-E) lower level frame 67		No
C-FR3A2	Boiler Room #2 (1-65-2-E) lower level bulkhead 80		No
C-FR3A3	Passageway (1-63-3-L)	False bulkhead 65	Yes
C-FR2A4	2-43-1-L		No

TABLE 32 - Boiler Room #1 (1-65-1-E) Bells (1 each)

Number	Location	Bulkhead/ Frame
C-FR9B	Passageway (1-63-3-L)	False bulkhead 65

TABLE 33 - Boiler Room #1 (1-65-1-E) Strobe Lights. (2 each)

Number	Location
C-FR6L1	Upper level center bulkhead 80
C-FR3L1	Lower level port side by QAWTD 1-65-0

TABLE 34 - Boiler Room #1 (1-65-1-E) Discharge Nozzles. (8 each)

Location
Center bulkhead 63 upper
Center bulkhead 80 upper
Center bulkhead 69 lower
Center bulkhead 80 lower
Starboard frame 72 upper
Starboard frame 72 lower
Port frame 72 upper
Port frame 72 lower

TABLE 35 - Boiler Room #1 (1-65-1-E) Pull Station Locations

Space	Bulkhead/ Frame
Passageway (1-63-3-L)	False bulkhead 65
Stair Tower 2	
Secondary in passageway 1	
Locally in CO2 room 1	

TABLE 36 - Boiler Room #1 (1-65-1-E) Ventilation (Dampers and Resets)

Type	Damper location	Power reset location	Fan Location	Motor #

Exhaust	1-65-1-E	01-71-2-Q	01-71-2-Q	74
Supply	1-65-1-E	01-71-2-Q	01-71-1-Q	75

TABLE 37 – Boiler Room #1 (1-65-1-E) CO2 Pressure Activated Sirens (2 each)

location
Center upper level bulkhead 69
Starboard lower level frame 69

TABLE 38 - Boiler Room Number #2 (1-65-2-E) Alarm Panels. (5 each)

Number	Location	Bulkhead/ Frame	Bell
C-FR7A2	Passageway (02-63-0-L)	At QAWTD 02-66-2	No
C-FR2A3	Passageway (1-63-2-L)	Bulkhead 65	Yes
C-FR2A1	Boiler Room #1 (1-65-1-E) lower level frame 67		No
C-FR2A2	Boiler Room #1 (1-65-1-E) lower level bulkhead 80		No
C-FR7A1	Boiler Room #1 (1-65-1-E) upper level bulkhead 80		No
C-FR6A2	2-43-1-L		No

TABLE 39 - Boiler Room Number #2 (1-65-2-E) Bells (1 each)

Number	Location	Bulkhead/ Frame
C-FR8B	Passageway (1-63-2-L)	Bulkhead 65

TABLE 40 - Boiler Room Number #2 (1-65-2-E) Strobe Lights. (2 each)

Number	Location
C-FR7L1	Bulkhead 80 upper level center
C-FR2L1	Bulkhead 65 lower level center

TABLE 41 - Boiler Room Number #2 (1-65-2-E) Discharge. (8 each)

Location
Center bulkhead 69 upper

Center frame 77 upper
Center frame 69 lower
Starboard frame 73 upper
Starboard frame 72 lower
Starboard frame 76 lower
Port frame 72 upper
Port frame 72 lower

TABLE 42 - Boiler Room Number #2 (1-65-2-E) Pull Station locations

Space	Bulkhead/ Frame
Passageway (1-63-2-L)	Bulkhead 65
Stair Tower 2	
Locally in CO2 Room 1	
Secondary in passageway 1	

TABLE 43 - Boiler Room Number #2 (1-65-2-E) Ventilation (dampers and resets)

Type	Damper location	Power reset location	Fan Location	Motor #
Exhaust	1-65-2-E	01-71-2-Q	01-71-2-Q	74
Supply	1-65-1-E	01-71-2-Q	01-71-1-Q	75

TABLE 44 – Boiler Room #2 (1-65-2-E) CO2 Pressure Activated Sirens (2 each)

location
Center upper level bulkhead 69
Starboard lower level frame 69

TABLE 45 - Boiler Room Number #2 (1-65-2-E) Horn/ Light Alarms (2 each)

Number	Location	Bulkhead/ Frame
C-FR3(B)1	MDE/ Boiler Intake Air Room 1	Bulkhead 69

C-FR7L(3)	MDE/ Boiler Intake Air Room 2	

TABLE 46 - Hazmat Locker (1-113-2-K) Alarm Panels. (2 each)

Number	Location	Bulkhead/ Frame	Bell
C-FR13A2	2-43-1-T		
C-FR13A1	1-117-0-Q		Yes

TABLE 47 - Hazmat Locker (1-113-2-K) Bell (1 each)

Number	Location	Bulkhead/ Frame
C-FR10B	Passageway (1-63-2-L)	Bulkhead 65

TABLE 48 - Hazmat Locker (1-113-2-K) Strobe Lights. (1 each)

Number	Location
C-FR	In Space 1-113-2-K

TABLE 49 - Hazmat Locker (1-113-2-K) Discharge Nozzles (1each)

Location
Located just inside door

TABLE 50 - Hazmat Locker (1-113-2-K) Pull Station Locations

Space	Bulkhead/ Frame
Passageway	Bulkhead 65
Locally at tank (1-105-01-L) Passageway	

TABLE 51 - Hazmat Locker (1-113-2-K) Ventilation (Dampers and Resets)

Type	Damper location	Power reset location	Fan Location
Exhaust	Fan Room (01-107-2-Q)	01-117-4-L	01-107-2-Q
Supply	None	01-117-4-L	1-108-2-Q

TABLE 52 - Hazmat Locker (1-113-2-K) CO2 Pressure Activated Siren (1 Each)

Location

STBD Aft Corner at Frame 117

TABLE 53 – Total Quantities

CO2 System	Quantity
Alarm panels with lights	38 EA
Strobe Lights	21 EA
CO2 Discharge Nozzles	86 EA
Pull Stations	15 EA
Pressure Activated Sirens	11 EA
Horn/Light Assemblies	8 EA
Dampers	21 EA
Pressure Activated Switch	18 EA
Cylinders (100 lb)	68 EA 3 – Deck Store Rm 1-9-0-A, 1 - Passageway 1-105-01-L, 64 – CO2 Rm 1-65-1-K

3.6 **Por**table **CO2 Fire Extinguishers**. The Contractor must accomplish the following maintenance on the fire extinguishers. See TABLE 54 for a list of fire extinguishers. Any accidental discharge must be reported to the Cutter immediately, and the Contractor will be responsible for any damages and for certifying that the space is safe for personnel.

3.6.1. Inspection. Contractor must inspect the following items on all CO2 fire extinguishers. See Figure 4 for a diagram of a typical 15 lb CO fire extinguisher. Submit a CFR summarizing findings and fill out the inspection tag for each extinguisher.

- Anti pilferage/locking pin seal
- Locking pin
- Extinguisher cylinder for dents, corrosion and damage
- Hydrostatic test date stamp
- Instruction plate
- Horn holder
- Discharge hose for cuts, tears, brittleness fittings
- Electrical tape on connection of hose to cylinder

- Tightness of handle
- Mount for tightness, corrosion and freedom of movement.
- Weight of the cylinder.

3.6.2. Hydrostatic Testing. The Contractor must hydrostatically test sixty fire extinguishers designated by the COR.

TABLE 54 – Portable **CO2 Fire Extinguishers Locations**

CO_2 EXTINGUISHERS		
LOCATION	**SPACE NAME**	**QTY**
08-44-0-C	ALOFTCON	1
05-33-0-C	Bridge	2
05-45-2-C	Met Lab	1
04-38-0-L	P-Way	2
04-50-0-L	Radio (Locked space)	2
04-58-2	Electronic Equip Room (inside Radio) (Locked space)	1
04-58-3-C	Ham Shack (Locked space)	1
04-59-2	ET Shop (Locked space)	1
04-86-0-Q	Upper stack space	1
04-110-0-C	Helo Control Shack	1
03-35-1-L	P-Way	1
03-48-0-L	P-Way	1
03-57-2	ET Store Room (Locked space)	1
03-58-1-Q	Fan Room	1
03-65-5	Battery Locker	1
03-65-0-E	ADG	1

USCGC HEALY (WAGB-420) DOCKSIDE AVAILABILITY FY2027

03-70-1-Q	Fan Room	1
03-86-0-Q	Helo Workshop (upper gym area)	1
03-99-2-Q	Fan Room	1
02-33-0-L	Science Conf Room	1
02-48-1	P-Way	1
02-50-0-L	Sick Bay	1
02-59-1-Q	Fan Room	1
02-67-2	Intake Room #2	1
02-67-4	Intake Room #5	1
02-69-1	Intake Room #1	1
02-71-1	Intake Room #3	1
02-71-2	Intake Room #4	1
02-86-0-Q	Helo Workshop	1
02-86-1-Q	Fan Room	1
02-86-4-Q	Diver locker	1
02-96-0-Q	Hangar	2
02-96-4	Helo Equip Room	2
01-23-0-L	P-Way	3
01-42-2-Q	Fan Room	1
01-42-3-Q	Fan Room	1
01-50-0-Q	Fan Room	1
01-65-0-Q	Fan Room	1
01-71-1-Q	Fan Room	1
01-71-2-Q	Fan Room	1

USCGC HEALY (WAGB-420) DOCKSIDE AVAILABILITY FY2027

01-105-0-C	ECC/Main Control	3
01-107-1-Q	Fan Room	1
01-107-2-Q	Fan Room	1
01-117-0-Q	Future Lab	1
01-117-2-Q	Photo Lab	1
01-117-4-L	P-Way	2
01-119-2-Q	Elect/Computer Lab	2
01-129-0-Q	Aft Conn	1
1-G-0-E	Deck Machinery Room	1
1-15-1-Q	Bosn Workshop	1
1-21-2-L	P-Way	1
1-48-0-L	P-Way	1
1-50-1-Q	Elect Equip Room #1	1
1-63-2-L	P-Way (port corridor)	1
1-63-3-L	P-Way (stbd corridor)	2
1-65-1-K	CO2 Room	26
1-65-4-Q	EM Shop	1
1-105-O-Q	Science Reefer Room	1
1-105-1-L	P-Way	1
1-105-3-Q	Bio Chem Lab	1
1-117-0-Q	Main Lab	3
1-117-1-Q	Wet Lab	1
2-33-3-Q	Laundry	1
2-41-2-Q	Repair 2	2

USCGC HEALY (WAGB-420) DOCKSIDE AVAILABILITY FY2027

2-43-0-C	Gyro Room	1
2-63-0-E	AMR 5	2
2-75-0-E	AMR 6	2
2-84-0-E	AMR 7	3
2-93-0-E	AMR 8	3
2-102-0-E	Cycloconverter Room	2
2-102-1-E	Stbd Transformer Room	2
2-102-2-E	Port Transformer Room	5
2-117-2-L	P-Way	4
2-117-4-Q	Repair 3	2
2-126-2-L	P-Way	1
2-126-4-Q	DC Weld Shop	1
3-33-1-E	A/C Flats	2
3-59-0-E	PoTABLE Water Room	1
3-117-0-E	JP5	1
4-33-0-E	Bowthruster Sewage	1
4-63-0-E	AMR #1 Upper	1
4-63-0-E	AMR #1 Lower	1
4-75-0-E	AMR #2 Lower	2
4-84-0-E	AMR #3 Upper	1
4-84-0-E	AMR #3 Lower	1
4-93-0-E	AMR #4 Upper	1
4-93-0-E	AMR #4 Lower	1
4-102-0-E	Motor Room Upper	2

4-102-0-E	Motor Room Lower	2

3.7 **Stored Pressure PKP Fire Extinguishers**. The Contractor must accomplish the following maintenance on the fire extinguishers. See TABLE 55 for a list of fire extinguishers. Any accidental discharge must be reported to the Cutter immediately, and the Contractor will be responsible for any damages and for certifying that the space is safe for personnel.

3.7.1. Inspection. Contractor must inspect the following items on all PKP fire extinguishers. Submit a CFR summarizing findings and fill out the inspection tag for each extinguisher.

- Anti pilferage/locking pin seal
- Locking pin
- Extinguisher cylinder for dents, corrosion and damage
- Hydrostatic test date stamp
- Date of manufacture stamp
- Discharge hose for cuts, tears, brittleness fittings
- Tightness of handle
- Mount for tightness, corrosion and freedom of movement.
- Weight of the extinguisher.

3.7.2. Hydrostatic Testing. The Contractor must hydrostatically test 102 fire extinguishers as designated by the COR.

TABLE 55 – stored pressure pkp fire extinguisher locations

PKP EXTINGUISHERS		
LOCATION	**SPACE NAME**	**QTY**
04-38-0-L	P-Way	6
04-45-1	Officers Lounge	1
03-35-1-L	P-Way	1
03-35-2-L	P-Way	1
03-42-5-L	P-Way	2
03-48-0-L	P-Way	2
03-50-6-L	P-Way	1
03-65-0-E	ADG	2
03-86-1-Q	Aviation Office	1

USCGC HEALY (WAGB-420) DOCKSIDE AVAILABILITY FY2027

02-35-0-L	P-Way	7
02-66-0-T	Intake Flat (Outside of Intake Rm 1)	1
02-86-0-Q	Helo Workshop	1
02-96-0-Q	Hangar	4
01-23-0-L	P-Way	8
01-40-2	Ships Library	1
1-6-0-E	Deck Machinery Room	2
1-9-1-K	Flammable Liquid Stores	1
1-15-1-Q	Bosn Workshop	1
1-15-2-M	Armory	1
1-33-0-Q	Mess Deck	3
1-48-0-L	P-Way (stbd corridor)	1
1-50-2-Q	Trash Stowage	1
1-54-2-Q	Incinerator Room	2
1-63-3-L	P-Way	2
1-63-1-E	Boiler Room 1 (1 in upper level)	3
1-65-2-E	Boiler Room 2 (1 in upper level)	4
1-65-1-K	CO2 Room	4
1-65-4-Q	EM Shop	1
1-80-1-E	Engine Room 1	4
1-80-2-E	Engine Room 2	4
1-105-0-Q	Science Reefer	1
1-117-1-Q	Wet Lab	1
1-105-3-Q	Bio-Chemistry Lab	1

1-117-0-Q	Main Lab	2
2-21-0-A	Dry Stores	2
2-33-3-Q	Laundry	1
2-41-2-Q	Repair 2	1
2-48-0-A	MICA	1
2-117-4-Q	Repair 3	1
2-117-2-L	P-Way	2
2-121-2-Q	Main Prop Shop	1
2-135-0-E	Winch Room	2
2-147-0-E	Steering Gear Room	2
2-159-1-A	Fuel Hose Room	1
3-21-O-A	Lower Gsk	1
3-33-2-E	AC Shop	1
3-113-5-E	Hydraulic Equip Room	2
3-126-0-AA	Cargo Hold #1	1
4-33-0-E	Bowthruster Sewage	1
4-63-0-E	AMR #1 Lower	1
4-93-0-E	AMR #4 Upper	2
4-102-0-E	Motor Room Lower	1

3.8 **APC Fire extinguishers**. The Contractor must accomplish the INSPECTING THE EXTINGUISHER and MAINTENANCE – SERVICE PROCEDURE sections of the Amerex Inspection, Maintenance, and Recharge Service Manual NO. 13259. Submit a CFR summarizing the results of the inspections. See TABLE 57 for information about the extinguishers.

TABLE 57 – APC fire extinguisher locations

APC Extinguishers

Item #	LOCATION	SPACE NAME	QTY
1	1-33-0-Q	Messdeck (in Serving Line)	1
2	04-43-3-Q	CO's Pantry	1

3.9 **SCBA Cylinders**. The Contractor must accomplish the following maintenance. Reference TP 3935A for more information about the cylinders. See TABLE 58 for a list of cylinders.

3.9.1. Inspection. Contractor must inspect the following items on every SCBA Submit a CFR summarizing findings.

- Clean the SCBA cylinder with a mild soap to remove dust, grime and grease.
- Inspect the cylinder body for cracks, bulges, dissolving, corrosion, softening,dents, fibers breaking or peeling away, heat damage, weakened areas
- Hydrostatic test date
- Pressure gauge reading and the pressure gauge itself for damage
- Manufacture date
- Function test cylinder valve
- Inspect the pressure relief device for cracks, melting or burns.
- Leak test the SCBA in accordance with Paragraph 6.3.1 of TP 3935A

3.9.2. Hydrostatic Testing. The Contractor must hydrostatically test twenty SCBAs as designated by the COR in accordance with TP 3935A.

TABLE 58 – SCBA Cylinders

scba cylinders Serial numbers								
Item #	Serial #	Hydro test date (yyyy/dd/mm)	Item #	Serial #	Hydro test date (yyyy/dd/mm)	Item #	Serial #	Hydro test Date (yyyy/dd/mm)
1	ACU299496	2020/08/01	37	IL320752	2021/02/01	73	IL347454	2021/02/01
2	ACU355506	2020/02/01	38	IL325718	2021/02/01	74	IL347644	2021/02/01
3	ACU362956	2020/02/01	39	IL336537	2021/02/01	75	IL347681	2021/02/01
4	IL319672	2021/02/01	40	IL336584	2021/02/01	76	IL347683	2021/02/01
5	IL319740	2021/02/01	41	IL336718	2021/02/01	77	IL347684	2021/02/01
6	IL319952	2021/02/01	42	IL338162	2021/02/01	78	IL347687	2021/02/01

USCGC HEALY (WAGB-420) DOCKSIDE AVAILABILITY FY2027

7	IL319955	2021/02/01	43	IL346748	2021/02/01	79	IL347688	2021/02/01
8	IL319957	2021/02/01	44	IL346761	2021/02/01	80	IL347691	2021/02/01
9	IL319959	2021/02/01	45	IL346768	2021/02/01	81	IL347694	2021/02/01
10	IL319960	2021/02/01	46	IL346774	2021/02/01	82	IL347695	2021/02/01
11	IL319963	2021/02/01	47	IL346796	2021/02/01	83	IL347696	2021/02/01
12	IL319964	2021/02/01	48	IL346840	2021/02/01	84	IL347700	2021/02/01
13	IL319966	2021/02/01	49	IL346860	2021/02/01	85	IL347701	2021/02/01
14	IL319967	2021/02/01	50	IL347055	2021/02/01	86	IL347702	2021/02/01
15	IL319970	2021/02/01	51	IL347092	2021/02/01	87	IL347703	2021/02/01
16	IL319974	2021/02/01	52	IL347126	2021/02/01	88	IL347708	2021/02/01
17	IL319975	2021/02/01	53	IL347168	2021/02/01	89	IL347709	2021/02/01
18	IL319976	2021/02/01	54	IL347182	2021/02/01	90	IL347715	2021/02/01
19	IL319978	2021/02/01	55	IL347183	2021/02/01	91	IL347723	2021/02/01
20	IL319979	2021/02/01	56	IL347240	2021/02/01	92	IL347724	2021/02/01
21	IL319985	2021/02/01	57	IL347267	2021/02/01	93	IL347725	2021/02/01
22	IL319986	2021/02/01	58	IL347268	2021/02/01	94	IL347726	2021/02/01
23	IL319988	2021/02/01	59	IL347272	2021/02/01	95	IL347727	2021/02/01
24	IL319989	2021/02/01	60	IL347276	2021/02/01	96	IL347728	2021/02/01
25	IL319992	2021/02/01	61	IL347277	2021/02/01	97	IL347729	2021/02/01
26	IL320201	2021/02/01	62	IL347280	2021/02/01	98	IL347730	2021/02/01
27	IL320207	2021/02/01	63	IL347285	2021/02/01	99	IL347731	2021/02/01
28	IL320209	2021/02/01	64	IL347286	2021/02/01	100	IL347733	2021/02/01
29	IL320178	2021/02/01	65	IL347377	2021/02/01	101	IL347792	2021/02/01
30	IL320296	2021/02/01	66	IL347399	2021/02/01	102	IL347956	2021/02/01

31	IL320306	2021/02/01	67	IL347404	2021/02/01	103	IL348019	2021/02/01
32	IL320373	2021/02/01	68	IL347407	2021/02/01	104	IL567761	2021/02/01
33	IL320489	2021/02/01	69	IL347415	2021/02/01	105	- N/A -	- N/A -
34	IL320562	2021/02/01	70	IL347416	2021/02/01	106	- N/A -	- N/A -
35	IL320725	2021/02/01	71	IL347417	2021/02/01	107	- N/A -	- N/A -
36	IL320744	2021/02/01	72	IL347422	2021/02/01	108	- N/A -	- N/A -

3.10 Operational test, final. Upon completion of work, the Contractor must witness Coast Guard personnel perform an operational test of all items or shipboard devices to be disturbed, used, repaired, or altered, to demonstrate existing operational condition. Submit a CFR.

3.11 Touch-up preservation. The Contractor must prepare and coat all new and disturbed surfaces to match existing adjacent surfaces in accordance with SFLC Std Spec 6310, paragraph 3.1.13 (Touch-ups and minor coating repairs.)

4. NOTES

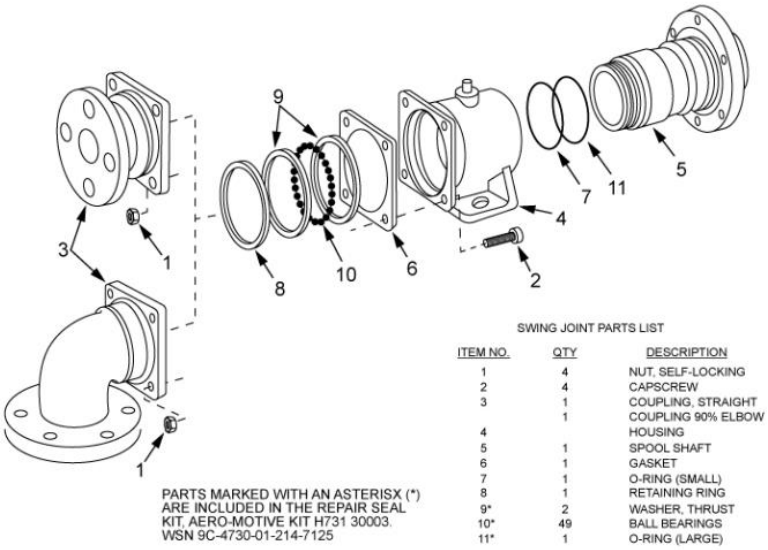

FIGURE 1. AFFF HOSE REAL SWIVEL JOINT

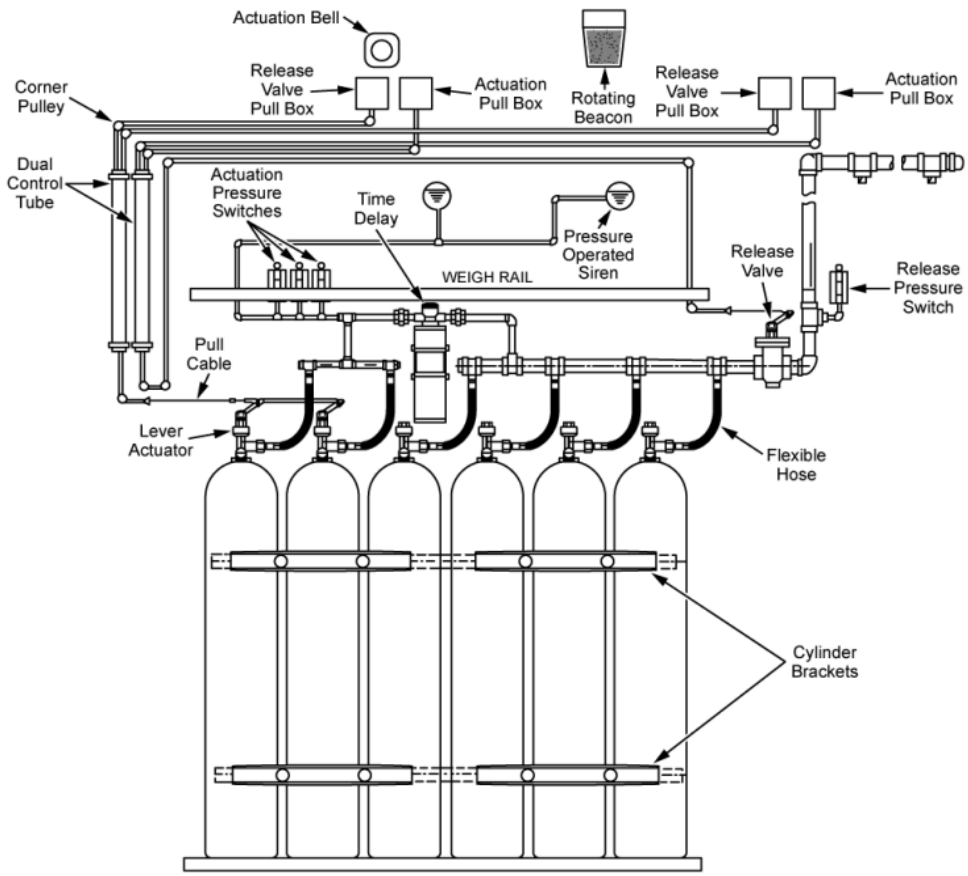

FIGURE 2. TYPICAL LEVER ACTUATED CO2 FLOODING SYSTEM

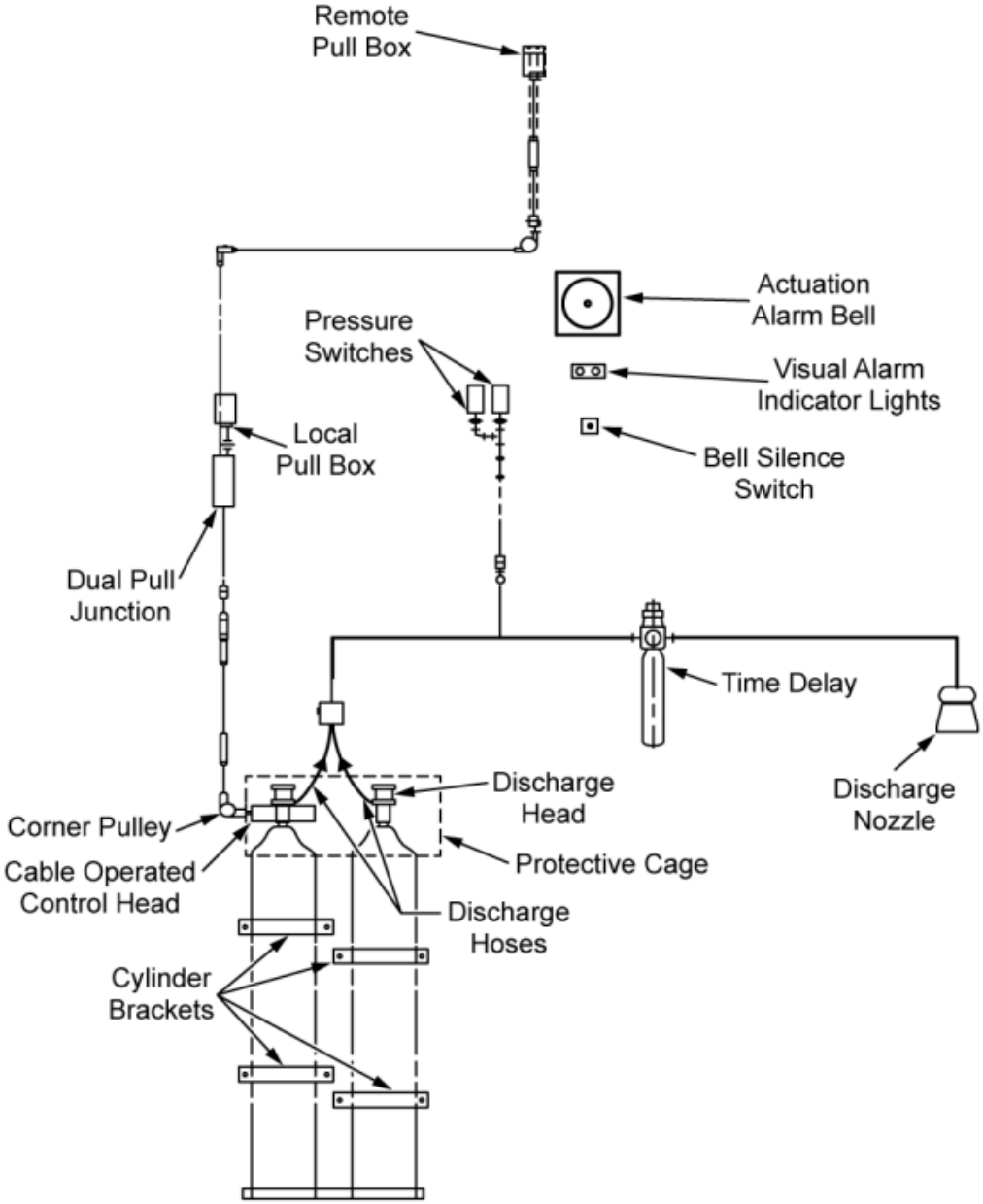

FIGURE 3. TYPICAL CABLE OPERATED CONTROL HEAD CO2 FLOODING SYSTEM

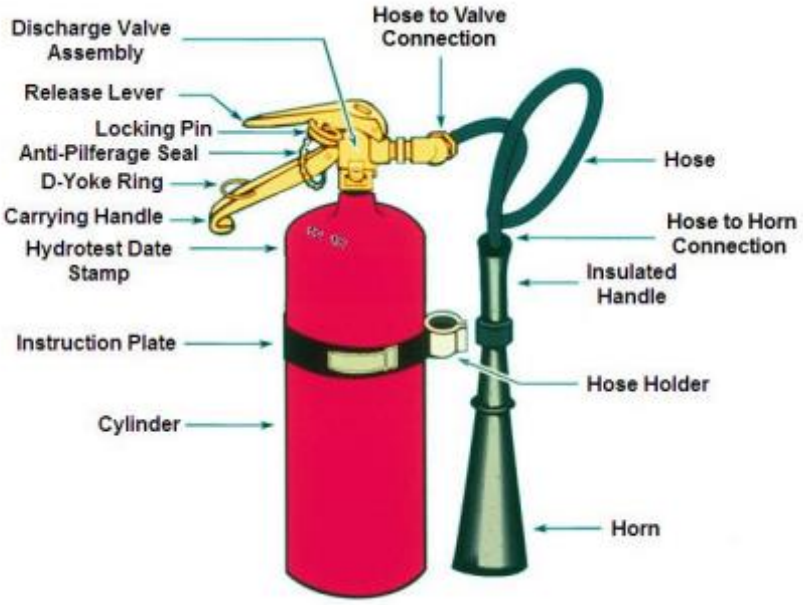

FIGURE 4. 15 LB CO2 EXTINGUISHER ASSEMBLY

WORK ITEM 12: Oily Water Separator, Annual Maintenance

1. SCOPE

1.1 Intent. This work item describes the requirements for the Contractor to conduct annual maintenance on the ship' oily water separator (OWS).

1.2 Government-furnished property.

None

2. REFERENCES

COAST GUARD DRAWINGS

Coast Guard Drawing 420-WAGB-593-008, Rev A, Piping Mods GEA Westfalia OWS Install

COAST GUARD PUBLICATIONS

Coast Guard Technical Publication (TP) LR-H5-0043-V0, 2023; GEA Westfalia Separator BilgeMaster Clean Design

Surface Forces Logistics Center Standard Specification 5000 (SFLC Std Spec 5000), 2022, Auxiliary Machine Systems

Surface Forces Logistics Center Standard Specification 6310 (SFLC Std Spec 6310), 2022, Requirements for Preservation of Ship Structures

OTHER REFERENCES

US Environmental Protection Agency Method 1664, Feb 1999, N-Hexane Extractable Material and Silica Gel Treated N-Hexane Extractable Material by Extraction and Gravimetry.

3. REQUIREMENTS

3.1 General.

3.1.1 CIR.

None

3.1.2 Technical Representative. The Contractor must provide the services of an OEM authorized/ licensed Tech Rep for the GEA Westfalia BilegeMaster to accomplish the following on site:

- Provide manufacturer's proprietary system/ equipment information, software, and tools.
- Assist with and ensure compliance with manufacturer's procedures and standards during disassembly, inspection, repair, modification, calibration, and reassembly of the equipment/system.
- Conduct system familiarity training.
- Attend the sea trial for the system

3.1.2.1 Ensure the Tech Rep is an OEM Certified Representative for the system/equipment stated above and demonstrated on their résumé.

3.1.3 Protective measures. The Contractor must furnish and install all protective measures in accordance with SFLC Std Spec 0000, paragraph 3.3.3 (Vessel component, space, and equipment protection).

3.1.4 Interferences. The Contractor must handle all interferences in accordance with SFLC Std Spec 0000, paragraph 3.3.5 (Interferences).

NOTE

Coast Guard personnel will operate all shipboard machinery and equipment.

NOTE

Steam must be available to test the OWS

3.2 Operational test, initial. Prior to commencement of work, the Contractor must witness Coast Guard personnel perform an initial operational test of all items or shipboard devices to be disturbed, used, repaired, or altered, to demonstrate existing operational condition. Submit a CFR.

3.2.1 The Contractor must take a 1-liter sample of the effluent and complete a USEPA Test Method 1664 oily water test result after one hour of operation. The Contractor must not allow this effluent to leave the ship. This will require removing and re-installing a valve adjacent to the overboard.

3.3 Maintenance. Complete all the maintenance listed in in the table under “Maintenance every 8000 operating hours – after 1 year at the latest” on pages 107 and 108 of TP LR-H5-0043-V0.

3.3.1. Submit a CFR with the results from any inspection required in that list

3.3.2 For bidding purposes, assume that the polyamide gasket 140 is damaged and will need to replaced.

3.3.3. The Contractor must sample the old oil in the drive chamber in accordance with Paragraph C2.1.3.1 of SFLC Std Spec 5000.

3.3.4. Use the drive spare parts for “Operation: 1 year or 8,000 hours”.

3.3.5. Disregard the “Separator motor” section.

3.3.6. Assume that the motor bearings will need to be lubricated.

3.4. Flow Meter. The Contractor must renew the flow meter discussed in the Section 7 of the "Deckma Hamburg" portion of TP LR-H5-0043-V0. Calibrate the unit as needed after replacement.

NOTE
The flow meter is manufactured by Kobold

3.5. Commissioning. The Contractor must commission the system in accordance with Section 8 of TP LR-H5-0043-V0. While completing these processes, the Contractor must explain these steps to Coast Guard personnel and answer questions to enhance the crew's knowledge of the system. For bidding purposes, assume that these explanations will make the precheck and start up two hours longer than usual.

3.6 Operational test, post repairs. After completion of work, the Contractor must witness Coast Guard personnel perform an operational test of all items or shipboard devices that were disturbed, used, repaired, or altered, or installed be in satisfactory operating condition. Submit a CFR.

3.6.1 The Contractor must take a 1-liter sample of the effluent and complete a USEPA Test Method 1664 oily water test result after one hour of operation. This will require removing and re-installing a valve adjacent to the overboard. Submit a CFR

4. NOTES

This section is not applicable to this work item.

WORK ITEM 13: Auxiliary Seawater System (ASW) Orifice Plate, Renew

1. SCOPE

1.1 Intent. This work item describes the requirements for the Contractor to renew 17 orifice plates in the ASW system.

1.2 Government-furnished property.

None

2. REFERENCES

COAST GUARD DRAWINGS

Coast Guard Drawing 420-WAGB-524-001, Rev P, Diagram Auxiliary Seawater System

COAST GUARD PUBLICATIONS

Surface Forces Logistics Center Standard Specification 6310 (SFLC Std Spec 6310), 2022, Requirements for Preservation of Ship Structures

OTHER REFERENCES

None

3. REQUIREMENTS

3.1 General.

3.1.1 CIR.

None.

3.1.2 Tech Rep.

None

3.1.3 Protective measures. The Contractor must furnish and install all protective measures in accordance with SFLC Std Spec 0000, paragraph 3.3.3 (Vessel component, space, and equipment protection).

3.1.4 Interferences. The Contractor must handle all interferences in accordance with SFLC Std Spec 0000, paragraph 3.3.5 (Interferences).

3.1.5. Residual Fluids. The Contractor must dispose of residual fluids in compliance with all applicable Federal, state, and local laws, ordinances, regulations and SFLC Standard Specification 0000. Do not discharge any fluids to the bilge.

NOTE

Coast Guard personnel will operate all shipboard machinery and equipment.

3.2 Operational test, initial. Prior to commencement of work, the Contractor must, witness Coast Guard personnel perform an initial operational test of all items or shipboard devices to be disturbed, used, repaired, or altered, to demonstrate existing operational condition.

3.3 Orifice. The Contractor must renew the 17 orifice plates listed in CG Dwg 420-WAGB-524-001 in accordance with Figure 1.

3.3.1. Orifice diameter referenced in General Note 2.3 of Figure 1 can be stamped or scribed.

3.3.2 Disregard the ordering information in General Notes 2.1 and 2.2 of Figure 1.

3.3.3. Renew the hardware and gaskets in kind.

3.4 Leak test. After completing all authorized mechanical (i.e. threaded, bolted, etc.) joint repairs, the Contractor must test the seawater system using the system fluid at normal operating pressure. Ensure zero visible leakage from or deformation of mechanical parts by repairing all leaks and discrepancies. Submit a CFR.

3.5 Operational test, post repairs. After completion of work and in the presence of the Coast Guard Inspector, the Contractor must thoroughly test all disturbed equipment to show satisfactory operating condition. Submit a CFR.

3.6 Touch-up preservation. The Contractor must prepare and coat all new and disturbed surfaces to match existing adjacent surfaces in accordance with SFLC Std Spec 6310, paragraph 3.1.13 (Touch-ups and minor coating repairs.)

4. NOTES

GENERAL NOTES

1.0 SCOPE -
- 1.1 THIS MATERIAL STANDARD SUPERCEDES AVONDALE SHIPYARDS MECHANICAL STANDARD NUMBER 25.
- 1.2 THIS STANDARD COVERS THE MANUFACTURE OF ORIFICE PLATES FOR THE FOLLOWING FLAT FACE FLANGES:
  - 1.2.1 150# FORGED CARBON STEEL, ASTM A105.
  - 1.2.2 300# FORGED CARBON STEEL, ASTM A105.
  - 1.2.3 150# NAVY BRONZE, ASTM B61.
  - 1.2.4 250# NAVY BRONZE, ASTM B61

2.0 ORDERING INFORMATION -
- 2.1 ORIFICE PLATES SHALL BE DESIGNATED BY TITLE, SIZE AND AVONDALE SHIPYARDS PIECE MARK NUMBER.
- 2.2 THE ORIFICE DIAMETER SHALL BE PREDRILLED AS SPECIFIED ON THE APPLICABLE SYSTEM DRAWING.
- 2.3 THE ORIFICE DIAMETER SHALL BE STAMPED ON EACH PLATE.

3.0 MATERIALS -
- 3.1 MONEL, ASTM B127.

4.0 DIMENSIONS AND TOLERANCES -
- 4.1 ALL DIMENSIONS ARE IN INCHES.
- 4.2 TOLERANCE + OR - 1/32".

5.0 WORKMANSHIP, FINISH AND APPEARANCE -
- 5.1 ALL SURFACE AREAS, DRILLED HOLES, AND EDGES SHALL BE GROUND SMOOTH AND BE FREE OF BURRS.

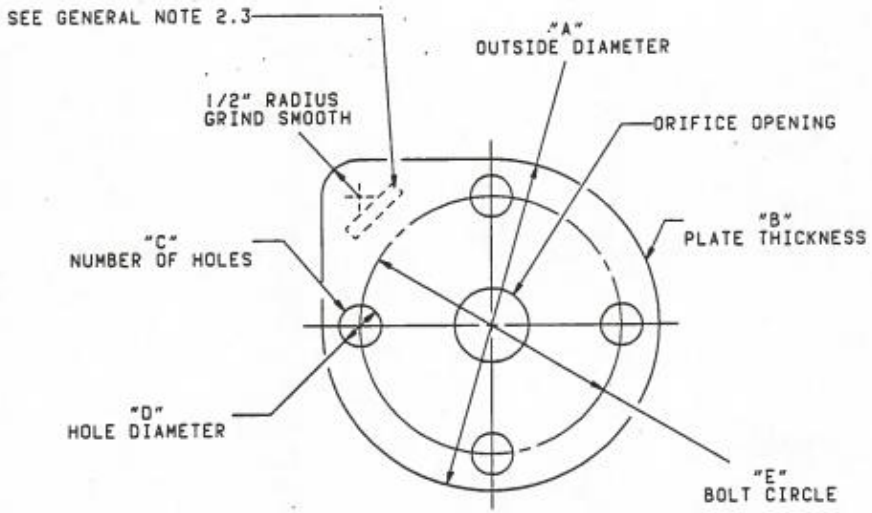

DETAIL

T.H.DOUSSAN 09/02/81 ENGINEERING			
R.J.DUHON JR 09/01/81 PRODUCTION			
S.H.BAILEY 08/26/81 STANDARDS			
W.K.POTTS 08/31/81 MECHANICAL			

AVONDALE SHIPYARDS INC P O BOX 50280 NEW ORLEANS LA 70150	STANDARD AS BS	TITLE ORIFICE PLATE FLAT FACE FLANGE	DWG NO MS-06-OP-1	REV -
			SCALE NONE	SH NO 1 OF 3

ORIFICE DIMENSIONS - 150# ASTM A105 FLANGE

AVONDALE SHIPYARDS PIECE MARK NUMBER	FLANGE NPS	OUTSIDE DIAMETER A	PLATE THICKNESS B	NUMBER OF HOLES C	DIAMETER OF HOLES D	BOLT CIRCLE E
000 083 016	1/4	3 1/2	1/8	4	5/8	2 3/8
000 083 017	3/8	3 1/2	1/8	4	5/8	2 3/8
000 083 018	1/2	3 1/2	1/8	4	5/8	2 3/8
000 083 019	3/4	3 7/8	1/8	4	5/8	2 3/4
000 083 020	1	4 1/4	1/8	4	5/8	3 1/8
000 083 021	1 1/4	4 5/8	1/8	4	5/8	3 1/2
000 083 022	1 1/2	5	1/8	4	5/8	3 7/8
000 083 023	2	6	1/8	4	3/4	4 3/4
000 083 024	2 1/2	7	1/8	4	3/4	5 1/2
000 083 025	3	7 1/2	1/8	4	3/4	6
000 083 026	4	9	1/8	8	3/4	7 1/2
000 083 027	5	10	3/16	8	7/8	8 1/2
000 083 028	6	11	3/16	8	7/8	9 1/2
000 083 029	8	13 1/2	3/16	8	7/8	11 3/4
000 083 030	10	16	1/4	12	1	14 1/4
000 083 031	12	19	1/4	12	1	17

ORIFICE DIMENSIONS - 300# ASTM A105 FLANGE

AVONDALE SHIPYARDS PIECE MARK NUMBER	FLANGE NPS	OUTSIDE DIAMETER A	PLATE THICKNESS B	NUMBER OF HOLES C	DIAMETER OF HOLES D	BOLT CIRCLE E
000 083 032	1/2	3 3/4	1/8	4	5/8	2 5/8
000 083 033	3/4	4 5/8	1/8	4	3/4	3 1/4
000 083 034	1	4 7/8	1/8	4	3/4	3 1/2
000 083 035	1 1/4	5 1/4	1/8	4	3/4	3 7/8
000 083 036	1 1/2	6 1/8	1/8	4	3/4	4 1/2
000 083 037	2	6 1/2	1/8	8	3/4	5
000 083 038	2 1/2	7 1/2	1/8	8	7/8	5 7/8
000 083 039	3	8 1/4	1/8	8	7/8	6 5/8
000 083 040	4	10	1/8	8	7/8	7 7/8
000 083 041	5	11	3/16	8	7/8	9 1/4
000 083 042	6	12 1/2	3/16	12	7/8	10 5/8
000 083 043	8	15	3/16	12	1	13

T.H.DOUSSIN 09/02/81	ENGINEERING
R.J.DUHON JR 09/01/81	PRODUCTION
S.H.BAILEY 08/26/81	STANDARDS
W.K.POTTS 08/31/81	MECHANICAL

AVONDALE SHIPYARDS INC
P O BOX 50280
NEW ORLEANS LA
70150

STANDARD
AS BS

TITLE
ORIFICE PLATE
FLAT FACE FLANGE

DWG NO MS-06-OP-1
REV -
SCALE NONE
SH NO 2 OF 3

ORIFICE DIMENSIONS - 150# ASTM B61 FLANGE

AVONDALE SHIPYARDS PIECE MARK NUMBER	FLANGE NPS	OUTSIDE DIAMETER A	PLATE THICKNESS B	NUMBER OF HOLES C	DIAMETER OF HOLES D	BOLT CIRCLE E
000 083 044	1/4	3 1/4	1/8	3	9/16	2 1/8
000 083 045	3/8	3 3/8	1/8	3	9/16	2 1/4
000 083 046	1/2	3 9/16	1/8	3	9/16	2 7/16
000 083 047	3/4	3 13/16	1/8	4	9/16	2 11/16
000 083 048	1	4 1/4	1/8	4	9/16	3 1/8
000 083 049	1 1/4	4 1/2	1/8	4	9/16	3 3/8
000 083 050	1 1/2	5 1/16	1/8	6	9/16	3 15/16
000 083 051	2	5 9/16	1/8	6	9/16	4 7/16
000 083 052	2 1/2	6 1/8	1/8	6	9/16	5
000 083 053	3	6 5/8	1/8	8	9/16	5 1/2
000 083 054	4	7 11/16	1/8	8	9/16	6 9/16
000 083 055	5	9 1/16	3/16	10	11/16	7 13/16
000 083 056	6	10 1/8	3/16	12	11/16	8 7/8
000 083 057	8	12 3/8	3/16	14	11/16	11 1/16
000 083 058	10	15	1/4	15	13/16	13 7/16
000 083 059	12	17 5/8	1/4	18	13/16	16 1/16

ORIFICE DIMENSIONS - 250# ASTM B61 FLANGE

AVONDALE SHIPYARDS PIECE MARK NUMBER	FLANGE NPS	OUTSIDE DIAMETER A	PLATE THICKNESS B	NUMBER OF HOLES C	DIAMETER OF HOLES D	BOLT CIRCLE E
000 083 060	1/4	3 1/4	1/8	3	9/16	2 1/8
000 083 061	3/8	3 3/8	1/8	3	9/16	2 1/4
000 083 062	1/2	3 9/16	1/8	3	9/16	2 7/16
000 083 063	3/4	3 13/16	1/8	4	9/16	2 11/16
000 083 064	1	4 1/4	1/8	4	9/16	3 1/8
000 083 065	1 1/4	4 1/2	1/8	4	9/16	3 3/8
000 083 066	1 1/2	5 1/16	1/8	6	9/16	3 15/16
000 083 067	2	5 9/16	1/8	6	9/16	4 7/16
000 083 068	2 1/2	6 1/8	1/8	6	9/16	5
000 083 069	3	6 5/8	1/8	8	9/16	5 1/2
000 083 070	4	7 11/16	1/8	8	9/16	6 9/16
000 083 071	5	9 1/16	3/16	10	11/16	7 13/16
000 083 072	6	10 1/8	3/16	12	11/16	8 7/8
000 083 073	8	12 3/8	3/16	14	11/16	11 1/16
000 083 074	10	15	1/4	15	13/16	13 7/16
000 083 075	12	17 5/8	1/4	18	13/16	16 1/16

T.H. DOUSSAN 09/02/81 ENGINEERING
R.J. DUMON JR 09/01/81 PRODUCTION
S.H. BAILEY 08/28/81 STANDARDS
W.K. POTIS 08/31/81 MECHANICAL

AVONDALE SHIPYARDS INC
P O BOX 50280 NEW ORLEANS LA 70150

STANDARD
AS BS

TITLE
ORIFICE PLATE FLAT FACE FLANGE

DWG NO MS-06-OP-1
REV -
SCALE NONE
SH NO 3 OF 3

FIGURE 1. ORIFICE PLATE SPECIFICATIONS

WORK ITEM 14: Aux Diesel Generator Starter (SLEP)

1. SCOPE

1.1 Intent. This work item describes the requirements for the Contractor to install and test a new ADG starter motor.

1.2 Government-furnished property.

MTI	ITEM DESCRIPTION	NSN/PN	QTY	ESTIMATED COST ($/UNIT)
N	Twin turbo starter	T112-60031-01R-103	1	$6,800
N	Pressure Regulator	3-30327-001	1	$3,200

2. REFERENCES

COAST GUARD DRAWINGS

Coast Guard Drawing 420 WAGB 312-001, Rev -, Emergency Power Generator Set Start Air Reducing Valve

Coast Guard Drawing 420 WAGB 551-005, Rev D, Diagram Starting Air System

Coast Guard Drawing 420 WAGB 551-009, Rev 1, SLEP ADG Starter Motor and Regulator Mods

COAST GUARD PUBLICATIONS

Coast Guard Technical Publication (TP) 5070B, SWBS 311, NOV 2017, Diesel Engine, Auxiliary Generator (420-WAGB)

Surface Forces Logistics Center Standard Specification 0000 (SFLC Std Spec 0000), 2022, General Requirements

Surface Forces Logistics Center Standard Specification 0740 (SFLC Std Spec 0740), 2022, Welding and Allied Processes

Surface Forces Logistics Center Standard Specification 5000 (SFLC Std Spec 5000), 2022, Auxiliary Machine Systems

Surface Forces Logistics Center Standard Specification 6310 (SFLC Std Spec 6310), 2022, Requirements for Preservation of Ship Structures

OTHER REFERENCES

TDI T100-V TurboTwin, April 2006, Installation and Operating Manual

TDI TurboFlow Air Regulator, March 2014, Product Sheet

3. REQUIREMENTS

3.1 General.

3.1.1 CIR.

None

3.1.2 Tech Rep. The Contractor must provide the following Technical Representatives

3.1.2.1 Woodard Tech Rep. The Contractor must provide the services of an OEM authorized/ licensed Tech Rep for the Woodward electronic governor to accomplish the following on site:

- Provide manufacturer's proprietary system/ equipment information, software, and tools.
- Assist with and ensure compliance with manufacturer's procedures and standards during disassembly, inspection, repair, modification, calibration, and reassembly of the equipment/system.

3.1.2.2 EMD Tech Rep. The Contractor must provide the services of an OEM authorized/ licensed Tech Rep for the EMD engine to accomplish the following on site:

- Provide manufacturer's proprietary system/ equipment information, software, and tools.
- Assist with and ensure compliance with manufacturer's procedures and standards during disassembly, inspection, repair, modification, calibration, and reassembly of the equipment/system.

3.1.2.3 Ensure both Tech Reps are OEM Certified Representatives for the system/equipment stated above and demonstrated on their résumé. Submit the names and credentials of the Tech Rep to the COR at the Arrival Conference.

3.1.3 Protective measures. The Contractor must furnish and install all protective measures in accordance with SFLC Std Spec 0000, paragraph 3.3.3 (Vessel component, space, and equipment protection).

3.1.4 Interferences. The Contractor must handle all interferences in accordance with SFLC Std Spec 0000, (Interferences) including, but not limited to the following:

- Piping, valves and fittings
- Pipe Hangers
- Decking and/or Deck Plates.

NOTE

Coast Guard personnel will operate all shipboard machinery and equipment.

3.2 Operational test, initial. Prior to commencement of work, the Contractor must witness Coast Guard personnel perform an initial operational test of all items or shipboard devices to be disturbed, used, repaired, or altered, to demonstrate existing operational condition.. Submit a CFR.

3.2.1. Perform a blowdown test of the engine prior to any other engine testing.

NOTE

Prelube pump must be energized during the following procedure.

3.2.2 Measure and record the receiver and start regulator downstream pressures prior to each starting attempt. The test must be conducted utilizing 5 second bursts for each attempt, cranking with no fuel (blowdown crank with petcocks closed to simulate starting attempts), and beginning with a fully charged air receiver with air compressor off-line. Record completion of the attempts in Table 1 and submit via CFR. The intent is to document the cranking RPM and air capacities with the existing starter configuration before the starters are replaced. After the new starter is installed, the values can be compared to identify any issues with the start solenoid or air relay that needs to be corrected to support the new starter.

TABLE 1 – OPERATIONAL TEST, INITIAL

	Receiver pressure	**Start Regulator Downstream Pressure**	**RPM**
Attempt 1			
Attempt 2			
Attempt 3			
Attempt 4			
Attempt 5			
Attempt 6			

3.2.3 Fuel Rack booster. The contractor and both technical representatives must inspect the fuel rack booster to the extent necessary to prove it is functional. Verify the rack booster is installed correctly, bled correctly and supplies oil pressure to the governor during starting evolutions. This effort may require the installation of temporary gauges to verify operation and/or starting the engine to allow the booster to fill.

3.3 Removals.

3.3.1 The contractor must remove the two existing Ingersol Rand starters, pressure-reducing valve and piping sections as shown in 420-WAGB-551-009. See Figures 1 and 2 for pictures of the original arrangement.

3.4 Installation.

3.4.1 The contractor must install the new starter, hoses and modify piping to suit the installation in accordance with 420-WAGB-551-009. A single starter is to be utilized in lieu of the previous two-starter arrangement.

3.4.2 The Contractor may be required to rotate the starter motor casings at either of the assembly's flanged locations to achieve the required clearance around the starter motor and to facilitate the connection angles required for hose installation. Reference Dwg 420-WAGB-551-009 and TDI T100-V TurboTwin, April 2006, Installation and Operating Manual for further direction.

3.4.3 The contractor must fabricate or provide and install a metal blank at the unused starter location as shown in USCG-WAGB-551-009.

3.4.4 The contractor must install a new pressure reducing valve and modify piping connections in accordance with DWG 420-WAGB-551-009.

3.4.5 Perform welds and associated NDE in accordance with SFLC Std. Spec 0740.

3.5 Piping Hydrostatic test. After all authorized repairs, the Contractor must hydrostatically test all new and disturbed piping and components of the auxiliary generator starting air system in accordance with SFLC Std Spec 0740, Appendix C, Hydrostatic Test. Ensure zero leakage from or permanent deformation of pressure-containing parts by repairing all leaks, deformations, and discrepancies. **Submit a CFR.** Test values are shown in DWG 420-WAGB-551-009.

3.6 Hose Hydrostatic test. The Contractor must hydrostatically test all new hose assemblies with their attached fittings. Test pressure must be 150% of the rated working pressure of the hose. Ensure no leakage from or permanent deformation of pressure-containing parts by repairing all leaks and discrepancies. Submit a CFR documenting all certifications of pressure test results. Test values are shown in DWG 420-WAGB-551-009.

3.6.1 Flush the hoses following hydrostatic testing and cap the ends to prevent contamination. Flush to a condition free of grease, oil, flux, scale, dirt, loose particles or loose corrosion products, and all other contamination foreign to the base material of the surface.

3.7 Starter cranking testing and adjustment. The Contractor and technical representative must commission the air start system to determine setpoints and adjustments as found in the following paragraphs. **Submit CFR** to include all parameters and readings taken during this process.

3.7.1 Adjust the new reducing valve to achieve a balance between minimum cranking RPM required to reliably start the engine while maximizing the number of starting attempts with the current air receiver's capacity. As the new starter is significantly more powerful this set value may vary from the previous

reducing valves set point. Do not exceed recommended pressures as found in the starter's technical publication.

3.7.2 Document the air regulator set point as well as all values for each start attempt below in Table 2 in the same manner as paragraph 3.2.1. This information will be utilized for comparison with initial operational test to validate receiver size calculations for the new arrangement.

TABLE 2 – CRANKING TEST, POST TURBINE STARTER INSTALLATION

	Receiver pressure	**Start Regulator Downstream Pressure**	**RPM**
Attempt 1			
Attempt 2			
Attempt 3			
Attempt 4			
Attempt 5			
Attempt 6			

3.8 Electronic Governor, starting R.P.M. adjustment. After completing paragraph 3.6 herein, the technical representative familiar with the Woodward 826 governor must adjust the minimum RPM startup setpoint to ensure the engine fuel rack actuates that allows repeatable successful AutoStart attempts.

NOTE

Initial research has suggested the governor starting RPM may have been set at approximately 71 RPM which is likely higher than necessary for the EMD 645 and likely not a value the previous starters could achieve consistently under all operational conditions.

3.8.1 The EMD starting procedure as found in technical publications defaults to immediately moving the rack when cranking is initiated in conjunction with the use of a rack booster. Older electronic governor versions provided an override terminal for low rpm fault override during starting. The 826 governor has an actual RPM value set point for this purpose in lieu of previous governor versions.

3.8.2 The technical representatives and COR must agree on a setpoint that achieves the following:

- Provides enough margin between the actual and anticipated cold start cranking rpm to assure the rack will actuate during auto-start or emergency startup without assistance.
- Provide a minimum rpm value high enough that will provide some assurance the engine is spinning freely prior to applying fuel. This parameter provides some verification the cylinders are clear prior to rack actuation during remote start, auto start, or emergency start scenarios when a blow down is not conducted.
- Example, if 60 rpm can be achieved consistently, the setup point should likely be set at least 25 percent lower (15 rpm) and/or as low as permissible to achieve combustion and immediate rack actuation to make full usage of

the rack booster and 5 second burst attempts. This percentage value is a general guide as application specific value is to be identified during testing.

- When determining the above setpoints, successful immediate starting of the engine shall supersede any concerns related to visible exhaust emissions.

3.9 Auto-start Test. The Contractor must oversee an engine start via the remote/auto start method to the extent necessary to validate the engine reliably starts via auto start. The Contractor must notify the COR 72 hours prior to this testing.

3.9.1 After the successful completion of the Operational Auto-Start Test, the Contractor must submit a CFR to document:

- • The 826-governor starting RPM set point value.
- • The number of starting attempts.
- • The number of successful engine starts.

3.10 Operational test, final. Upon completion of work, the Contractor must witness Coast Guard personnel perform an initial operational test of all items or shipboard devices that were disturbed, used, repaired, or altered, to demonstrate operational condition. Submit a CFR.

3.10.1. Perform a blowdown test of the engine prior to any other engine testing.

NOTE

Prelube pump must be energized during the following procedure.

3.10.2 Measure and record the receiver and start regulator downstream pressures prior to each starting attempt. The test must be conducted utilizing 5 second bursts for each attempt, cranking with no fuel (blowdown crank with petcocks closed to simulate starting attempts), and beginning with a fully charged air receiver with air compressor off-line. Record completion of the attempts in Table 1 and submit via CFR. The intent is to document the cranking RPM and air capacities with the existing starter configuration before the starters are replaced. After the new starter is installed, the values can be compared to identify any issues with the start solenoid or air relay that needs to be corrected to support the new starter.

TABLE 3 – OPERATIONAL TEST, FINAL

	Receiver Pressure	Start Regulator Downstream Pressure	RPM
Attempt 1			
Attempt 2			
Attempt 3			

Attempt 4			
Attempt 5			
Attempt 6			

3.11_ Touch-up preservation. The Contractor must prepare and coat all new and disturbed surfaces to match existing adjacent surfaces in accordance with SFLC Std Spec 6310, (Touch-ups and minor coating repairs.)

3.12 Pipe labeling. The Contractor must label affected piping as follows:

3.12.1 Stencil the following onto the pipe surfaces:

- Name of the piping system service.
- Destination, where feasible.
- Direction of flow, indicated by an arrow three inches long pointing away from the lettering (for reversible flow, point an arrow away from each end of the lettering).

3.12.2 Ensure all lettering and arrow(s) are as follows:

- In general, black color except white for dark-colored piping.
- Applied in conspicuous locations and preferably near control valves

3.13 Labels/tags. The Contractor must fabricate and install new label plates and tags on applicable components as follows:

3.13.1 Fabricate and install new tags on the new Air Start Supply and Control hoses in accordance with SFLC Std Spec 5000 Appendix C2.2.1.4. Service life date will be 12 years from the date of installation. Serial numbers to be as follows:

- ADG-SA-FL-5 (Starter Supply)
- ADG-SA-FL-9 (Starter Control Inlet)
- ADG-SA-FL-10 (Starter Control Outlet)

3.13.2 Fabricate and install new tags on the new chiller hoses in accordance with SFLC Std Spec 5000, Figure C-2.2.1.4. Service life will be 12 years from the date of installation. Consult with the CG Inspector to identify the hose serial numbers.

- Hose Log Item Number (Serial Number)
- Hydrostatic Test Pressure (psi)
- Hydrostatic Test Date (DD/MM/YY)
- Service Life (Replacement Date) Date (QTR "Q"/FY)

3.13.3 For each new hose assembly, the Contractor must submit, at a minimum, the information listed below in Microsoft Excel format. Submit information via CFR.

- Hose Number
- System
- Associated Assembly (i.e. A/C Inlet, Oil Cooler Return, etc.)
- Item (Hose, Expansion Joint, etc.)
- Location (Compartment Number)
- Hose Length (in.)
- Hose Diameter (in.)
- Hose Brand
- Hose Part Number
- Hose Construction/Type (Synth Rubber, Teflon, Metal, Plastic, etc.)
- Fitting #1 Description/Material
- Fitting #1 Brand
- Fitting #1 Part Number
- Fitting #2 Description/Material
- Fitting #2 Brand
- Fitting #2 Part Number
- Hose Rated Pressure (psi)
- Hydrostatic Test Pressure (psi)
- Hydrostatic Test Date
- Hose Replacement Date

3.14 Redlined Drawing Deliverables. The Contractor must “red-line” applicable Coast Guard drawing(s) referenced above to reflect the work or deviations specified in this work item in accordance SFLC Std Spec 0850. Submit a CFR.

4. NOTES

FIGURE 1. EXISTING PRESSURE REGULATOR VALVE

FIGURE 2. EXISTING STARTING AIR MOTORS

WORK ITEM 15: Boiler Tube Sheet and Gauge Glass, Replace (SLEP)

SCOPE

1.1 Intent. This Performance Work Statement describes the requirements for the Contractor to replace the gauge glass for Boiler #1, move the gauge glass for Boiler #2 and replace the tube sheet for Boiler #2.

NOTE

Coordinate this work with Work Item 20: Boiler Maintenance, Annual to avoid having to repeat tasking.

1.2 Government-furnished property.

MTI	ITEM DESCRIPTION	NSN/PN	QTY	PRICE ($/UNIT)
N	Gauge glass, Clark Reliance Size #9 Transparent Glas Mica Protected, Close-hook-up	PN: 19-TMCH-20	2	3,000.00
N	Valves, #64 In-Line Valve (Plain Closing)	PN: #64	4	500

REFERENCES

COAST GUARD DRAWINGS

Coast Guard Drawing 420-WAGB-200-001 Rev F, Machy Arrg List for Motor Rm, Aux Machy RMS, Gen Rm, Boiler Rms & Fwd & Aft Mach

Coast Guard Drawing 420 WAGB 259-005, Rev C, Machinery Plant Exhaust Gas Piping A & D

Coast Guard Drawing 420 WAGB 320-007, Rev H, SS Pwr Sys Main Deck

Coast Guard Drawing 420-WAGB-535-001, Rev M, Diagram Steam, Feed & Condensate System

Coast Guard Drawing 420-WAGB-801-001, Rev K, Booklet of General Drawings

COAST GUARD PUBLICATIONS

Coast Guard Technical Publication (TP) 5162A, 2023, S9517-AY-MMC-010 - Boiler, Oil Fired Auxiliary

Surface Forces Logistics Center Standard Specification 0000 (SFLC Std Spec 0000), 2022, General Requirements

Surface Forces Logistics Center Standard Specification 0740 (SFLC Std Spec 0740), 2022, Welding and Allied Processes

Surface Forces Logistics Center Standard Specification 3042 (SFLC Std Spec 3042), 2022, Shipboard Electrical Cable Removal, Relocation, Splice, Repair, and Installation

Surface Forces Logistics Center Standard Specification 6310 (SFLC Std Spec 6310), 2022, Requirements for Preservation of Ship Structures

OTHER REFERENCES

American Society of Mechanical Engineers (ASME) BPVC, 2017, Boiler and Pressure Vessel Code

ASTM F708-24, 2024, Standard Practice for the Design and Installation of Rigid Pipe Hangers

National Board Inspection Code (NBIC) Part II, 2023, Inspections

National Board Inspection Code (NBIC) Part III, 2023, Repairs and Alterations

REQUIREMENTS

3.1 General.

3.1.1 CIR.

None

3.1.2 Tech Rep. The Contractor must provide the following Technical Representatives.

3.1.2.1 Inspection Tech Rep. The Contractor must provide the services of a National Board of Boiler and Pressure Vessel Inspectors (NBBI) Commissioned Inspector or Pressure Equipment Inspect for Inservice boilers with an “R” endorsement to accomplish the following tasks – on site:

- Inspect the boiler
- Inspect any repairs of the boiler
- Determine the appropriate welding and NDE for the modifications

3.1.2.1.1 The Contractor must submit the name of the NBBI inspector and their current credential at the Arrival Conference.

3.1.2.2 Operational Tech Rep. The Contractor must provide the services of a City of Seattle Grade Two Steam engineer or a USCG-issued 2nd Assistant Engineer Steam Merchant Mariner Credential (Limited Horsepower or Unlimited Horsepower) or an equivalent credential to accomplish the following tasks – on site:

- Inspect the boiler
- Manage the layup
- Oversee any disassembly and reassembly of any equipment in this specification.

3.1.2.2.1 The Contractor must submit the name of the operational tech rep and their current credential at the Arrival Conference.

3.1.3 Protective measures. The Contractor must furnish and install all protective measures in accordance with SFLC Std Spec 0000, paragraph 3.3.3 (Vessel component, space, and equipment protection).

3.1.4 Interferences. The Contractor must handle all interferences in accordance with SFLC Std Spec 0000, (Interferences) including, but not limited to the following:

- Insulation
- Boiler tubes and tubesheet
- Ventilation
- Exhaust piping
- Deck grating

3.1.5 Residual Fluids. The Contractor must dispose of residual fluids (including but not limited to boiler water and cleaning fluids) in compliance with all applicable Federal, state, and local laws, ordinances, regulations and SFLC Standard Specification 0000. Document a complete chain of custody record of the removed contents and generated wastes, from the vessel to the point of final destination or delivery. Submit document to the COR upon completion of work.

3.1.6 Gas Free. The Contractor must clean the boiler as necessary to achieve a safe environment for hot work, and they must comply with the requirements of SFLC Std Spec 0000 for gas free certification.

3.1.7 Electrical work. The Contractor must accomplish all electrical work in accordance with SFLC Std Spec 3042, and test cables in accordance with SFLC Std Spec 3041. Utilize the existing wire ways for new cable runs as much as possible.

3.1.8. Welding and NDE Plan. The Contractor must submit a plan to address the welding and NDE required to accomplish this work at the Arrival Conference via CFR for review by the COR. The plan must be approved by the NBIC Type "R" representative, and it must address the following topics:

- Explain how the welding and NDE plan will meet the requirements NBIC Part 3, Section 2. Distinguish (as necessary) between the welding techniques used for the gauge removal and the tubesheet/tube renewal.
- Welding Procedure Specification (WPS), including a plain-language explanation of the welding techniques utilized
- Timeline for any heat treatment and method of applying heat
- If an alternative welding method described in NBIC Part 3, Section 2.5.3 is selected, then the Contractor must explain why heat treatment methods are "inadvisable or impractical" in accordance with Section 2.5.3 (a).
- Listing of qualified welding personnel and their records in accordance with NBIC Part 3, Section 2.2.4 – 2.2.6.
- Explain the NDE techniques used and how they will comply with NBIC Part 3, Section 4 as well as the inspection techniques listed in NBIC Part 2. Distinguish (as necessary) between the NDE techniques used for the gauge removal and the tubesheet/tube renewal.
- Listing of qualified NDE personnel and their credentials in accordance with

NBIC Part 3, Section 4.2(b). Exclusive use of VT will not be acceptable. The NDE inspector may NOT conduct any welding.

- Pressure and time duration requirements for post-repair liquid pressure testing of the boiler. An air test is NOT acceptable.

NOTE

Coast Guard personnel will operate all shipboard machinery and equipment.

3.2 Operational test, initial. Prior to commencement of work, the Contractor must witness Coast Guard personnel perform an initial operational test of all items or shipboard devices to be disturbed, used, repaired, or altered, to demonstrate existing operational condition including but not limited to the boiler. Submit a CFR.

3.2.1. If this work is performed after the initial operational test in Boiler, Annual Inspection Work Item and before the final operational test of that work item, then a new initial operational test is not required.

3.2.2. All items that are disturbed but not tested under Boiler, Annual Maintenance Work Item must be tested.

3.3 Layup. The Contractor must keep the boilers in a heated air, dry lay-up condition. Both the water side and the fire side of the boiler must be protected. The minimum fan requirement for each side is 750 CFM at 4" S.P. and the minimum rating for the electric heater is 10 KW. The Contractor must submit a plan documenting the layout of the dry air layup equipment via CFR for review and approval by the COR.

3.4 Boiler #1 Gauge Glass Modifications. The Contractor must remove the existing gauge glass associated nozzle and install the GFE gauge glass and valves using the existing pipe penetrations. The existing gauge glass assembly is Piece 34/35, Kewanee dwg 852181-001, TP 5162A

3.4.1. The weld and subsequent NDE must comply with the approved Welding and NDE plan.

3.4.2. The contractor must install a hangar meeting the requirements of ASTM F108 to support the top pipe

3.6.6. The Conractor must move the backing light to suit the new gauge glass, including installing a new cable to accommodate moving the light. The current cable is 1-76-1-1VL-B as shown in CG Dwg 420-WAGB-330-006. Utilize approximately 30 feet of LSDNW-4 (Piece 84, CG Dwg 420-WAGB-330-006). Conduct electrical work in accordance with SFLC Std Spec 3042.

3.4.3. Adjust the gauge glass backlight as needed to accommodate the new gauge glass. Conduct electrical work in accordance with SFLC Std Spec 3042.

3.4.4. The Contractor must submit a CFR documenting the NDE.

NOTE

Some boiler tubes are interferences for the relocation of the gauge glass penetrations. The tube sheet can no longer support retubing, so it must be renewed along with all of the boiler tubes.

3.5. Boiler #2 Tubesheet and Tube Renewal. The Contractor must renew the forward tube sheet and all tubes in boiler #2 in accordance with Dwg 852181 of TP 5162 and instructions from both Tech Reps.

3.5.1. The weld and subsequent NDE must comply with the approved Welding and NDE plan.

3.5.2. The contractor must submit a CFR documenting the NDE.

3.6. Boiler #2 Gauge Glass Modifications. The Contractor must remove the existing gauge glass assembly, cap the penetrations and install a new gauge glass with penetrations on the outboard portion of the boiler.

3.6.1. The approximate longitudinal location for the new gauge glass assembly is shown in Figure 1. See Kewanee Dwg 852181-001, TP 5162 for other details regarding the location of the new gauge glass assembly with respect to the boiler, and the installation into the boiler. Submit a CFR with the proposed location for the new gauge glass. Do not install the new gauge glass until the location is approved by the COR.

3.6.2. The contractor must weld a cap into the existing pipe penetration once the existing gauge glass assembly has been removed.

3.6.3. The weld and subsequent NDE must comply with the approved Welding and NDE plan.

3.6.4 If the welding method selected is from Paragraph 2.5.3 of NBIC Part 3, then the NDE showing satisfactory material quality prior to welding must be submitted via CFR and approval received from the COR prior to continuing the installation. The NBIC Tech Rep must sign that CFR.

NOTE

Paragraph 2.5.3 of NBIC Part 3 is not the only acceptable technique. Paragraph 3.5.4 herein is only required if the Contractor elects to use this technique.

3.6.5 Upon completion of the weld, the Contractor must submit a CFR showing satisfactory NDE that has been signed by the NBIC Tech Rep.

3.6.6. The Conractor must reinstall the backing light behind the gauge glass in a new location with new cable. The current cable is 1-76-2-1VL-B as shown in CG Dwg 420-WAGB-330-006. Utilize approximately 30 feet of LSDNW-4 (Piece 84, CG Dwg 420-WAGB-330-006). Conduct electrical work in accordance with SFLC Std Spec 3042.

3.6.7. The contractor must install a hangar meeting the requirements of ASTM F108 to support the top pipe

WARNING

Do not drain any fluids including fresh water, into any space, bilge, or exterior location.

3.7 Pipe flushing. The Contractor must flush all new and disturbed piping with clean fresh water until all debris is removed but no longer than five minutes. Ensure flushing fluid is directed to move scale and

foreign debris away from installed machinery to prevent possible damage upon operational testing. Submit a CFR documenting date and time of flushing process and level of pipe cleanliness.

3.7.1 Dispose of flushing fluid in accordance with all applicable Federal, state, and local regulations and SFLC Std Spec 0000.

3.8. Hydrostatic Pressure Test. The hydrostatic pressure test must be completed in Paragraph 3.4 of. Boiler, Annual Maintenance Work Item to specifications laid out in the Welding and NDE plan.

3.9. Documentation. The NBBI Commissioned Inspector shall fill out and submit NBIC Form R-2 andR-3 as applicable and apply their stamp to the boiler. Submit a CFR.

3.10 -Up Preservation. The Contractor must prepare and coat all new and disturbed piping and other surfaces to match adjacent surfaces in accordance with SFLC Std Spec 6310, Appendix B, Machinery, Interior, Machinery, Operating Temperatures Over 200oF or Piping, Interior. Piping, Uninsulated, Over 200oF

3.11 Operational test, final. Upon completion of the work, the Contractor must witness Coast Guard personnel perform a final operational test of all items or shipboard devices that were disturbed, used, repaired, or altered, to demonstrate operational condition. Submit a CFR.

3.2.1. If this work is performed after the initial operational test in Boiler, Annual Inspection Work Item and before the final operational test of that work item, then a final operational test is not required.

3.2.2. All items that are disturbed but not tested under Boiler, Annual Maintenance Work Item must be tested.

3.12 Redlined Drawing Deliverables. The Contractor must “red-line” applicable Coast Guard drawing(s) referenced above to reflect the work or deviations specified in this work item in accordance SFLC Std Spec 0850. Submit a CFR.

Notes

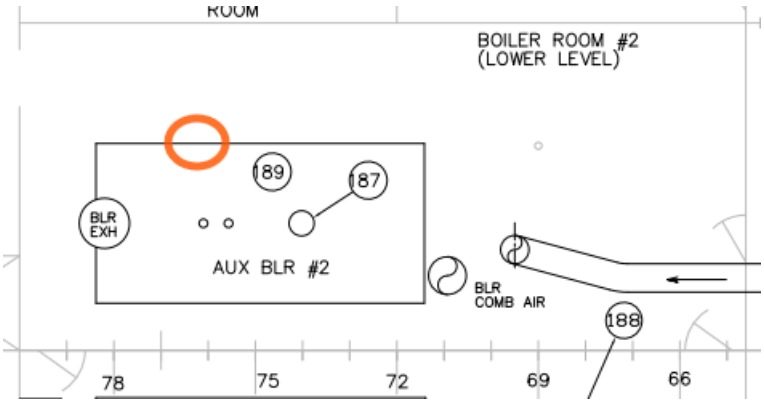

Figure 1. Approximate new location of #2 boiler gauge glass (circled in red). Excerpt from 420-WAGB-200-001

WORK ITEM 16: Steam Coil Pre-Heaters, Inspect and Test

1. SCOPE

1.1 Intent. This work item describes the requirements for the Contractor to inspect and test various Steam Coil Pre-Heaters listed in Table 1.

1.2 Government-furnished property.

None

2. REFERENCES

COAST GUARD DRAWINGS

Coast Guard Drawing 420-WAGB-320-016, Rev-D, HVAC Power System 01 Level
Coast Guard Drawing 420-WAGB-320-017, Rev-D, HVAC Power System 02 Level
Coast Guard Drawing 420-WAGB-320-018, Rev-E, HVAC Power System 03 Level
Coast Guard Drawing 420-WAGB-320-019, Rev-C, HVAC Power System 04 Level & Above
Coast Guard Drawing 420-WAGB-508-001, Rev-F, PP & Machinery Insulation Schedule
Coast Guard Drawing 420-WAGB-508-002, Rev-D, Piping & Machinery Insulation Schedule L/M
Coast Guard Drawing 420-WAGB-509-001, Rev-B, HVAC Insulation Schedule
Coast Guard Drawing 420-WAGB-509-002, Rev-B, HVAC Insulation Schedule L/M
Coast Guard Drawing 420-WAGB-510-002, Rev-H, HVAC 01 Level & Above
Coast Guard Drawing 420-WAGB-511-001, Rev-E, HVAC Heater List
Coast Guard Drawing 420-WAGB-512-642, Rev-C, Coil Assy Model# 1D5-9-5610F-.5-H-B
Coast Guard Drawing 420-WAGB-512-643, Rev-D, Coil Assy Model# 1D5-12-5608F-.7-H-B
Coast Guard Drawing 420-WAGB-512-644, Rev-D, Coil Assy Model# 1D5-18-5608F-1.5-H-B
Coast Guard Drawing 420-WAGB-512-647, Rev-C, Coil Assy Model# 1D11-18-5608F-2.1-H-B
Coast Guard Drawing 420-WAGB-512-649, Rev-C, Coil Assy Model# 1D13-24-5609F-3.3-H-B
Coast Guard Drawing 420-WAGB-512-650, Rev-C, Coil Assy Model# 1D14-18-5606F-2.6-H-B
Coast Guard Drawing 420-WAGB-512-654, Rev-D, Coil Assy Model# 1D22-36-5606F-8.3-H-B
Coast Guard Drawing 420-WAGB-512-655, Rev-E, Coil Assy Model# 1D16-12-5606F-2-H-B
Coast Guard Drawing 420-WAGB-512-675, Rev-C, Coil Assy Model# 1D24-42-5604F-10.5-H-B
Coast Guard Drawing 420-WAGB-512-676, Rev-D, Coil Assy Model# 1D16-42-5604F-7-H-B
Coast Guard Drawing 420-WAGB-512-677, Rev-D, Coil Assy Model# 1D12-30-5604F-3.8-H-B
Coast Guard Drawing 420-WAGB-535-001, Rev-M, Diagram Steam, Feed & Condensate System

COAST GUARD PUBLICATIONS

Surface Forces Logistics Center Standard Specification 0000 (SFLC Std Spec 0000), 2022, General Requirements
Surface Forces Logistics Center Standard Specification 0740 (SFLC Std Spec 0740), 2022, Welding and Allied Processes
Surface Forces Logistics Center Standard Specification 5100 (SFLC Std Spec 5100), 2022, Clean Shipboard Ventilation Systems
Surface Forces Logistics Center Standard Specification 6310 (SFLC Std Spec 6310), 2022, Requirements for Preservation of Ship Structures

OTHER REFERENCES

None

3. REQUIREMENTS

3.1 General.

3.1.1 CIR.

None.

3.1.2 Tech Rep.

Not Applicable.

3.1.3 Protective measures - general. The Contractor must furnish and install all protective measures in accordance with SFLC Std Spec 0000, paragraph 3.3.3 (Vessel component, space, and equipment protection).

3.1.4 Interferences. The Contractor must handle all interferences in accordance with SFLC Std Spec 0000, (Interferences). Known interferences include, but are not limited to the following:

- Piping
- Pipe insulation
- Vent ducting
- Cabling

NOTE

Coast Guard personnel will operate all shipboard machinery and equipment.

3.1.5 Residual Fluids. The Contractor must dispose of residual fluids in compliance with all applicable Federal, state, and local laws, ordinances, regulations and SFLC Standard Specification 0000. Notify the COR (in writing) at least 5 days prior to removal of wastes and fluids. Document a complete chain of custody record of the removed contents and generated wastes, from the vessel to the point of final destination or delivery. Submit document to the COR upon completion of work.

3.2 Operational test, initial. Prior to commencement of work, the Contractor must witness Coast Guard personnel perform an initial operational test of all items or shipboard devices to be disturbed, used, repaired, or altered, to demonstrate existing operational condition. Submit a CFR.

3.2.1 In addition to any other required operational testing, the disturbed ventilation systems must be tested in accordance with operational testing procedures in SFLC Std Spec 5100.

TABLE 1 – VENT SYSTEM PRE-HEATER LIST

Item Number	Heater Number	System Number	Detail Drawing	Location
SPH 1	04-62-1	SS-002	420-WAGB-512-644	04-58-1-Q
SPH 2	04-62-3	SS-002	420-WAGB-512-644	04-58-1-Q
SPH 3	04-59-1	SS-002	420-WAGB-512-683	04-58-1-Q
SPH 5	03-59-5	SS-019	420-WAGB-512-650	03-58-1-Q
SPH6	03-59-3	SS-019	420-WAGB-512-650	03-58-1-Q
SPH 12	03-83-1	SS-023	420-WAGB-512-643	03-65-1-Q
SPH 13	03-82-1	SS-023	420-WAGB-512-643	03-65-1-Q
SPH 15	03-93-4	SS-031	420-WAGB-512-677	03-84-2-Q
SPH 21	03-93-2	SS-034	420-WAGB-512-654	03-84-2-Q
SPH 22	03-94-2	SS-034	420-WAGB-512-655	03-84-2-Q
SPH 26	03-97-4	SS-034	420-WAGB-512-676	02-59-1-Q
SPH 27	02-61-1	SS-038	420-WAGB-512-642	02-59-1-Q
SPH 30	02-59-3	SS-042	420-WAGB-512-649	02-59-1-Q
SPH 31	02-59-1	SS-042	420-WAGB-512-649	02-59-1-Q
SPH 42	02-90-3	SS-047	420-WAGB-512-647	02-86-1-Q
SPH 43	02-90-1	SS-047	420-WAGB-512-647	02-86-1-Q
SPH 61	01-42-3	SS-055	420-WAGB-512-647	01-42-3-Q
SPH 62	01-42-1	SS-055	420-WAGB-512-647	01-42-3-Q
SPH 66	01-32-2	SS-056	420-WAGB-512-675	01-29-4-Q
SPH 77	01-471	SS-58	420-WAGB-512-655	01-42-3-Q
SPH 79	01-60-2	SS-66	420-WAGB-512-650	01-50-0-Q
SPH 85	01-71-3	SS-69	420-WAGB-512-681	01-71-1-Q
SPH 86	01-71-1	SS-69	420-WAGB-512-648	01-71-1-Q
SP 95	01-75-3	SS-70	420-WAGB-512-648	01-71-1-Q
SPH 98	01-79-1	SS-72	420-WAGB-512-657	01-81-1-Q
SPH 101	01-75-1	SS-75	420-WAGB-512-671	01-71-1-Q
SPH 107	01-112-2	SS-78	420-WAGB-512-652	01-107-2-Q
SPH 109	01-125-3	SS-79	420-WAGB-512-676	01-123-0-Q
SPH 114	01-127-0	SS-81	420-WAGB-512-670	01-123-0-Q
SPH 121	01-55-1	SS-85	420-WAGB-512-656	01-50-0-Q
SPH 124	01-110-4	SS-87	420-WAGB-512-675	01-107-2-Q
SPH 130	1-113-2	SS-88	420-WAGB-512-651	1-108-2-Q

SPH 131	1-113-4	SS-88	420-WAGB-512-651	1-108-2-Q
SPH 133	01-126-1	SS-89	420-WAGB-512-646	01-123-0-Q
SPH 134	01-125-1	SS-89	420-WAGB-512-646	01-123-0-Q
SPH 137	1-111-4	SS-95	420-WAGB-512-652	1-108-2-Q
SPH 138	1-111-2	SS-95	420-WAGB-512-652	1-108-2-Q

3.3 Pre-heater Maintenance. For all steam pre-heaters listed on Table 1, the Contractor must accomplish the following tasks using the referenced drawings for locations and technical specifications and return the heater to service.

3.3.1 Drain the steam and condensate lines. Clean and inspect the pre-heater assemblies in accordance with SFLC Std Spec 5100. It is not necessary to clean the entire ventilation run – just the preheaters.

3.3.2 Hydrostatically test each pre-heater assembly to ensure that there are no leaks in accordance with SFLC Std Spec 0740 Appendix C. Renew disturbed seals. Submit a CFR with hydro test results.

NOTE

The Contractor can accomplish the hydro test in place or in a separate facility at their discretion.

3.4 Steam traps. The Contractor must open, clean, service, and inspect two steam traps associated with each pre-heater listed on table 1. CG Drawing 420-WAGB-535-001 shows the steam traps.

3.4.1 Renew all gaskets and crush rings associated with each steam trap.

3.4.2 Reassemble and reinstall each of the steam traps after repairs and cleaning.

3.4.3 After the fan room is restored to operating service, use a thermal scanner to inspect each steam trap and verify that the trap is in working order. Submit a CFR with results.

3.5 Insulation restoration. After verifying that there are no water or steam leaks, renew any insulation that was affected in the process of completing this work item. Follow guidance in CG Drawing 420-WAGB-508-001, 420-WAGB-508-002, 420-WAGB-509-001 and 420-WAGB-509-002 for insulation requirements. Do not lag piping within 24 inches of a steam trap. Do not lag steam traps.

3.6 Touch-up preservation. The Contractor must prepare and coat all new and disturbed surfaces to match existing adjacent surfaces in accordance with SFLC Std Spec 6310, paragraph 3.1.13 (Touch-ups and minor coating repairs.)

3.7 Operational test, post repairs. After completion of work, the Contractor must witness Coast Guard personnel perform an initial operational test of all items or shipboard devices to be disturbed, used, repaired, or altered, to demonstrate existing operational condition. Submit a CFR.

3.7.1 In addition to any other required operational testing, the disturbed ventilation systems must be tested in accordance with operational testing procedures in SFLC Std Spec 5100.

4. NOTES

This section is not applicable to this work item.

WORK ITEM 17: Refrigeration Plant, Maintain

1. SCOPE

1.1 Intent. This work item describes the requirements for the Contractor to conduct routine maintenance on the three ship's stores refrigeration plants – Adrick ADR-074Q.

1.2 Government-furnished property.

None

2. REFERENCES

COAST GUARD DRAWINGS

Coast Guard Drawing 420-WAGB-514-015, Rev -, Ship Stores Refrigeration Electrical Drawing

Coast Guard Drawing 420-WAGB-514-016, Rev A, Ship Stores Refrigeration Condensing Unit

Coast Guard Drawing 420-WAGB-514-017, Rev -, Ardick Marine Condenser Model NFC-56Q

Coast Guard Drawing 420-WAGB-514-018, Rev -, Ship Stores Refrigeration Adrick Model ADR-074Q

COAST GUARD PUBLICATIONS

Coast Guard Technical Publication (TP) 5389, SWBS 516, October 2018, Ship's Stores Refrigeration Plant, Type Two – Mdel ADR-074Q – Installation and Operations Manual

Surface Forces Logistics Center Standard Specification 0000 (SFLC Std Spec 0000), 2022, General Requirements

Surface Forces Logistics Center Standard Specification 0740 (SFLC Std Spec 0740), 2022, Welding and Allied Processes

Surface Forces Logistics Center Standard Specification 5000 (SFLC Std Spec 5000), 2022, Auxiliary Machine Systems

Surface Forces Logistics Center Standard Specification 6310 (SFLC Std Spec 6310), 2022, Requirements for Preservation of Ship Structures

Surface Forces Logistics Center Standard Specification 8635 (SFLC Std Spec 8636), 2022, Temporary Services

OTHER REFERENCES

None

3. REQUIREMENTS

3.1 General.

3.1.1 CIR.

None.

3.1.2 Tech Rep. The Contractor must provide the services of a Qualified Technical Representative who is familiar with the Ardick Model ADR-074Q refrigeration plants to accomplish the following on site:

- Advise on manufacturer's system, equipment, software, and tools.
- Assist with disassembly, inspection, repair, modification, calibration, testing and reassembly of the equipment/system.
- Ensure compliance with manufacturer's procedures and standards during system disassembly, inspection, and reassembly as applicable.

3.1.2.1 Ensure the Tech Rep has experience with the system/equipment stated above and demonstrated on their résumé.

3.1.2.2 Submit the name and résumé of the Tech Rep to the COR at the Arrival Conference.

3.1.3 Protective measures. The Contractor must furnish and install all protective measures in accordance with SFLC Std Spec 0000.

3.1.3.1 Protective measures - environmental. The Contractor must abide by all applicable environmental protection tasks as specified in paragraph in SFLC Std Spec 0000, Appendix A (Requirements for Environmental Protection).

3.1.3.2 Protective measures – refrigerant. The Contractor must take all necessary precautions to prevent introduction of contaminants and moisture into refrigeration system piping and components by sealing all openings.

3.1.4 Interferences. The Contractor must handle all interferences in accordance with SFLC Std Spec 0000, paragraph 3.3.5 (Interferences). Known interferences include, but are not limited to the below-listed:

- Plant piping & fittings
- Refrigerant (134a)
- Lagging

3.1.5 Refrigerant handling.

3.1.5.1 Personnel qualification. The Contractor must provide the COR documentation that ensure all prime and sub-contractors servicing refrigerant-based Air Conditioning and Refrigeration (AC&R) equipment hold a current Environmental Protection Agency (EPA) Technician Certification, Type IV (Universal Certification), and meet all State and local regulations and licensing requirements.

3.1.5.2 Refrigerant draining and recovery. The Contractor must ensure all vessels' Air Conditioning Plant refrigerant is drained, recovered and stored in accordance with all Federal, state and local environmental regulations.

3.1.6 Continuity of Service. The Contractor must provide refrigerated and frozen storage in accordance with paragraph 3.3.14 of SFLC Standard Spec 8635 at the pier while the refrigeration system is out of service.

3.1.6.1 Disregard the size of the storage facility for refrigerated stores shown in Table 7 of SFLC Std Spec 8635. The Contractor must provide 800 cubic feet of frozen food storage and 800 cubic feet of refrigerated storage.

3.1.6.2 The Coast Guard will NOT provide any power to the contractor to run the temporary refrigerated/frozen stores equipment.

NOTE

Coast Guard personnel will operate all shipboard machinery and equipment.

3.2 Operational test - initial. Prior to commencement of work, the Contractor must witness Coast Guard personnel perform an initial operational test of all items or shipboard devices to be disturbed, used, repaired, or altered, to demonstrate existing operational condition. Submit a CFR.

3.2.1 Operate the Reefer plant for 4 hours. The Contractor must monitor all of the parameters listed in Paragraph 8.2.1 of TP 5389 and record them every 30 minutes. Compile all of this information into a CFR.

3.2.2. The Contractor must provide the COR at least 48 hours of warning prior to conducing the initial operational test.

3.3 Leak Tests

3.3.1. Piping Leak Test. The Contractor must conduct a piping leak test on all joints in the system in accordance with Paragraph 9.1.1 of TP 5389, including the valve stems in the refrigerant line. The Contractor can use either the soap method or the electronic leak detector method described in that section. Submit a CFR with the results of the leak test describing the location of the joint and the status of the test. Reference CG Drawing 420-WAGB-514-018 for information about the joints.

3.3.2. Condenser Leak Test. The Contractor must conduct a leak test of the condenser in accordance with Paragraph 9.1.2 of TP 5389. For bidding purposes, assume that there is a refrigerant leak and the full scope of the condenser leak testing paragraph and condenser tube plugging will be required.

3.4. Refrigerant.

3.4.1. The Contractor must remove the refrigerant in accordance with Paragraph 4.4 of TP 5389 upon completion of the piping leak test and dispose of it in accordance with Federal, state and local laws and SFLC Standard Spec 0000. Prior to disposing of the refrigerant, the Contractor must check the refrigerant for the presence of acid and non-combustibles.

3.4.2. Once work is complete, the Contractor must charge the system with new refrigerant in accordance with Paragraph 4.4 of TP 5389

3.5 Maintenance. The Contractor must conduct all of the monthly, quarterly and annual maintenance listed in Paragraphs 8.2.4, 8.2.5 and 8.2.6 of TP 5389.

3.5.1 The leak test listed in Paragraph 3.3 herein covers the leak test requirement in Paragraph 8.2.3.

3.5.2. For bidding purposes, assume that the contact points cleaning listed in Paragraph 8.2.4 is necessary.

3.5.3. For bidding purposes, assume that the painting requirement in Paragraph 8.2.5 is NOT necessary.

3.5.4. For bidding purposes, the only water line valves that need to be checked per Paragraph 8.2.6 are the ones immediately adjacent to the condensers.

3.5.5. When replacing the heads on the condenser, utilize the torque specifications and instructions on 420-WAGB-514-017.

3.5.6. In addition to the requirements in TP 5389, the Contractor must renew the zinc anodes (Piece 12, CG Dwg 420-WAGB-514-017) in the condenser.

3.5.7 In addition to the requirements in TP 5389, the Contractor must renew the burst discs and rupture discs as shown in CG Dwg 420-WAGB-514-016. Submit a CFR with inspection results.

3.6 Operational test – post repairs. After completion of work, the Contractor must witness Coast Guard personnel perform a final operational test of all items or shipboard devices that were disturbed, used, repaired, or altered, to demonstrate existing operational condition. Submit a CFR.

3.6.1 Operate the Reefer plant for 4 hours. The Contractor must monitor all of the parameters listed in Paragraph 8.2.1 of TP 5389 and record them every 30 minutes. Compile all of this information into a CFR.

3.6.2. The Contractor must provide the COR at least 48 hours of warning prior to conducing the final operational test.

3.7 Touch-up preservation, general. The Contractor must prepare and coat all new and disturbed exterior and interior surfaces, as applicable, to match existing adjacent surfaces in accordance with SFLC Std Spec 6310, paragraph 3.1.13 (Touch-ups and minor coating repairs.)

4. NOTES

None

WORK ITEM 18: Boiler, Annual Maintenance

1. SCOPE

1.1 Intent. This work item describes the requirements for the Contractor to perform annual maintenance service on two ship's service boilers. The boilers are Kewanee Model H3S-500-02. Complete descriptions are available in the referenced CG Tech Pub.

NOTE
Coordinate this work with Work Item 17: Tube Sheet and Gauge Glass, Replace to avoid having to repeat tasking.

1.2 Government-furnished property.

None.

2. REFERENCES

COAST GUARD DRAWINGS

Coast Guard Drawing 420 WAGB 259-005, Rev C, Machinery Plant Exhaust Gas Piping A & D

Coast Guard Drawing 420-WAGB-535-001, Rev M, Diagram Steam, Feed & Condensate System

Coast Guard Drawing 420-WAGB-801-001, Rev K, Booklet of General Drawings

COAST GUARD PUBLICATIONS

Coast Guard Technical Publication (TP) 5162A, 2023, S9517-AY-MMC-010 - Boiler, Oil Fired Auxiliary

Coast Guard Technical Publication (TP) 5359, 2023, Boiler Water Management System – Chem Aqua Water Treatment Program

Surface Forces Logistics Center Standard Specification 0000 (SFLC Std Spec 0000), 2022, General Requirements

Surface Forces Logistics Center Standard Specification 0740 (SFLC Std Spec 0740), 2022, Welding and Allied Processes.

Surface Forces Logistics Center Standard Specification 6310 (SFLC Std Spec 6310), 2022, Requirements for Preservation of Ship Structures

OTHER REFERENCES

None

3. REQUIREMENTS

3.1 General.

3.1.1 CIR.

- 3.5. Boiler Inspection

3.1.2 Tech Rep. The Contractor must provide the following Technical Representatives.

3.1.2.1 Inspection Tech Rep. The Contractor must provide the services of a National Board of Boiler and Pressure Vessel Inspectors (NBBI) Comissioned Inspector or Pressure Equipment Inspect for Inservice boilers with an "R" endorsement to accomplish the following tasks – on site:

- Inspect the boiler
- Inspect any repairs of the boiler

3.1.2.1.1 The Contractor must submit the name of the NBBI inspector and their current credential at the Arrival Conference.

3.1.2.2 Operational Tech Rep. The Contractor must provide the services of a City of Seattle Grade Two Steam engineer or a USCG-issued 2nd Assistant Engineer Steam Merchant Mariner Credential (Limited Horsepower or Unlimited Horsepower) or an equivalent credential to accomplish the following tasks – on site:

- Inspect the boiler
- Manage the layup
- Observe and conduct operational tests and controls system testing and setting
- Oversee the hydrostatic testing
- Oversee the removal of any equipment from the boiler
- Oversee any disassembly and reassembly of any equipment in this specification (with the exception of Chem Aqua components).

3.1.2.2.1 The Contractor must submit the name of the NBBI inspector and their current credential at the Arrival Conference.

3.1.2.3 Chem Aqua Tech Rep. The Contractor must provide the services of an OEM authorized/ licensed Tech Rep for the Chem Aqua water treatment system to accomplish the following on site:

- Provide manufacturer's proprietary system/ equipment information, software, and tools. This includes providing Technical Bulletin 1-003, "Boiler Boil Out Procedures"
- Assist with and ensure compliance with manufacturer's procedures and standards during disassembly, inspection, repair, modification, calibration, and reassembly of the equipment/system.

- Observe operational tests and conduct all water testing
- Conduct familiarization training

3.1.2.3.1 Ensure the Tech Rep is an OEM Certified Representative for the system/equipment stated above and demonstrated on their résumé.

NOTE

The same person can fill multiple roles if they are qualified

3.1.3 Protective measures. The Contractor must furnish and install all protective measures in accordance with SFLC Std Spec 0000, paragraph 3.3.3 (Vessel component, space, and equipment protection).

3.1.4 Interferences. The Contractor must handle all interferences in accordance with SFLC Std Spec 0000, (Interferences) including, but not limited to the following:

- Insulation

3.1.5 Residual Fluids. The Contractor must dispose of residual fluids (including but not limited to boiler water and cleaning fluids) in compliance with all applicable Federal, state, and local laws, ordinances, regulations and SFLC Standard Specification 0000. Notify the COR (in writing) at least 5 days prior to removal of wastes and fluids. Document a complete chain of custody record of the removed contents and generated wastes, from the vessel to the point of final destination or delivery. Submit document to the COR upon completion of work.

NOTE

Coast Guard personnel will operate all shipboard machinery and equipment.

3.2 Operational test, initial. Prior to commencement of work, the Contractor must witness Coast Guard personnel perform an initial operational test of all items or shipboard devices to be disturbed, used, repaired, or altered, to demonstrate existing operational condition including but not limited to the boiler. Submit a CFR.

3.2.1. Once the boiler has reached operational temperature and pressure, the initial operational test will last for 8 hours. The Contractor must record the following concentrations using a Contractor-provided exhaust stack analyzer at the beginning of testing, halfway through the testing and at the end of testing.

- NO_x
- SO_2
- CO
- CO_2
- O_2
- NH_3

The Contractor must also record the following items at the beginning of testing, halfway through the testing and at the end of testing. This information can be read from existing gauges in the system.

- Feedwater temperature
- Stack temperature
- Boiler pressure

- Fuel pressure
- Feedwater pressure

The Contractor must also sample the water from both boilers and the feedwater tank at the beginning of testing, halfway through the testing and at the end of testing.

- Make-Up Water Total Hardness
- Feedwater Total Hardness
- OH-Alkalinity Drop Test
- Conductivity and pH Test
- Sulfite Drop Test
- Flouresceine Test

3.3 Layup. The Contractor must keep the boiler in a heated air, dry lay-up condition. Both the water side and the fire side of the boiler must be protected. The minimum fan requirement for each side is 750 CFM at 4" S.P. and the minimum rating for the electric heater is 10 KW. The Contractor submit a plan documenting the layout of the dry air layup equipment via CFR for review by the COR.

3.4 Boiler Pressure Test. Pressure testing must occur before any work is done on the boiler and after all work on the boiler is completed. This pressure test must also fulfill the post-repair requirements from the tube renewal and gauge glass replacement in Auxiliary Boiler Sight Glass, Modify. All safety valves must be removed and blanked for the pressure test.

3.4.1 Test Plan. The Contractor must develop a pressure testing plan in accordance with NBIC Part 2 Paragraph 4.3.1. Contractor must develop a pressure test plan and submit it via CFR for COR approval at least 5 business days prior to the proposed test date. The plan must address the following topics and be signed by all three tech reps:

- Test pressure
- Source and treatment of testing water
- Status of all blanks or valves that will hold pressure
- Air Removal
- Make, model and arrangement of pressurizing pump.
- Date, time and duration of pressure test test
- Location where hydrostatic pump will be tied into the system.

3.4.2. Execute the pressure test per plan in the presence of a Coast Guard Inspector. Submit a CFR documenting the results of the pressure testing.

3.4.3. The Inspection Tech Rep and the Operational Tech Rep must be present for the hydro test.

3.5 Boiler Inspection. The Contractor must inspect the boiler.

3.5.1 Preparation for Boiler Inspection.

3.5.1.1 The Contractor must drain the boiler and dispose of approximately 3,000 gallons of treated water. Do not allow boiler water to drain into the deck of the compartment.

3.5.1.2 The Contractor must disassemble the boiler to allow complete access to the boiler firesides and water sides. This requires removing the front and rear covers, the burner assembly, and any other appurtenances that interfere with these removals. Remove the four (4) hand hole plates, the manhole plate, the wash-out plugs, and the water column connections.

3.5.1.3 The Contractor must wash the waterside interior of the boiler with deionized or demineralized fresh water.

3.5.1.4 The Contractor must remove all lagging from the boilers, including lagging pads on the boiler nozzles, surface and bottom blow connections, boiler safety valve connections, and other off stickers to allow for inspection. Reinstall all the lagging pads after completion of inspections. Off stickers include but are not limited to the following:

- Boiler gauge glass connections
- Exhaust Ducting connections
- Water level probe
- Waterside handhole plate access points
- Water level probe flanges
- Blowdown valve connection points

3.5.1.5 The Contractor must mechanically clean the firesides of the boiler. Wire brush or otherwise mechanically clean the internal surfaces of the 287 fire tubes, combustion chamber (Morrison tube), renew insulation above burner assembly after removal for inspection. Remove all debris. Contain, vacuum and dispose of all soot. Mechanically clean boiler combustion intake fan blades and supply louvers, Renew all gaskets, interior smoke side insulation, and hardware between burner assembly housing and Morrison tube.

3.5.1.6 The Contractor must ensure that there is no leakage of water into the boiler after cleaning and apply a blank flange as needed to accomplish this.

3.5.2 Inspection. The Contractor must inspect the boiler in accordance with Paragraph 1-7 g, h, i, j, k, l, m, n and p of TP 5162A. Submit a CIR with findings.

3.5.2.1 This inspection must be conducted by the NBBI-certified Tech Rep.

3.5.2.2. Conduct this inspection in the presence of a Coast Guard Inspector.

3.5.2.3 The Contractor must perform 150 UT shots per boiler as part of inspection either on the fireside or waterside of the boiler. The Contractor must submit a CFR of suggested UT locations and gain approval of the COR prior to taking measurements.

3.5.2.4. The Contractor must deliver this report to the COR prior to reassembling the boiler.

3.6 Boiler Maintenance. The Contractor must conduct the following maintenance on the boiler.

3.6.2 Conduct ALL the monthly maintenance in accordance with Paragraph 1-6.I.3 with the following conditions.

3.6.2.1. For bidding purposes, plan to clean the nozzle in Step (g)

3.6.2.2. For bidding purposes, plant to clean the oil strainer in Step (l)

3.6.2.3. Safety Valve maintenance will be addressed in Paragraph 3.6 herein.

3.6.2.4. Disregard Step (o)

3.6.3. Conduct the ONLY the following annual maintenance tasks in Paragraph 1-6.I.4 with the following conditions:

3.6.3.1 Clean and inspect the low water cutoff in Step (h) and 1-7.B.3.o and Appendix A

3.6.3.2. Test the flame safeguard device in Step (j) and Appendix H

3.7 Burner System Maintenance. The Contractor must conduct the following maintenance on the burner.

3.7.1 Conduct all testing in Paragraph 3-6 of TP 5162. Submit a CFR.

3.7.2 Clean the Sixteen Point Cam in accordance with Chapter 4, Paragraph 4-6. D of TP 5162.

3.7.3 Conduct the routine maintenance in Chapter 4, Paragraph 4-7 (both A and B) of TP 5162.

CAUTION!

During testing and safety valve setting, do not allow the test pressure to exceed the safety valve set point by more than 10 psi for longer than a few seconds

3.8 Boiler Safety Valve Testing. The Contractor must remove the two boiler safety valves (two valves per boiler), clean the exterior of dirt and debris and test the valves to ensure they open at 150 PSI and reseat properly after opening. Cover the opening left by the removal of the safety valves. Submit a CFR. Information regarding the boiler safety valves can be found in Dwg 852181-MB and Appendix A of TP 5162.

NOTE

The set point for the safety valve is set at the factory.

3.9 Air Compressor. The Contractor must conduct the Yearly and 2 Yearly maintenance for an LE 40 compressor from Section 4.1, Appendix I, TP 5132A

3.9.1. Renew the oil with Atlas Copco PAO oil.

3.9.2. The Contractor must change the blow-off silencer.

3.10 Chem Aqua Water Treatment System Maintenance. The Contractor must conduct the following maintenance on the Chem-Aqua treatment system in accordance with Section 6.0 of TP5359.

3.10.1 Inspect the pump for abnormal noise, vibration, leaks or operating temperatures in excess of 160 degrees Fahrenheit.

3.10.2 Inspect the entire chemical feed line and associated connections for leakage

3.10.3 Renew dosing diaphragm

3.10.4. Verify tightness of all fasteners.

3.10.5. Renew suction lines from dosing pumps to chemical storage tanks

3.10.6 Renew cartridge valves.

3.10.7. Remove all chemical residue from exterior of tanks, the tank rack and the deck surrounding chemical monitoring unit.

3.10.8 Renew all check valves

3.10.9 Remove, inspect, and clean all tubing into/out of the boiler water management system.

3.10.10. Remove and clean the inlet strainers as shown in the MJ-SERIES Pulse Meter Instructions in Section 8 of TP 5359

3.10.11 Inspect and test blowdown control valve. Details of the blowdown system are shown in the EQUIPMENT section of TP 5359.

3.10.12 Complete a 30-minute freshwater purge.

3.10.13 Upon completion of all chemical feed system work, complete the start up procedures in Section 5 of TP 5359 and verify the feed rate of the pump.

3.10.14. The Contractor must complete a hydrostatic test of the test sample cooler.

3.10.15. The Contractor must overhaul the bottom blowdown valves (piece 5 and 6) shown in 420-WAGB-517-004. Open, inspect and renew sealing surfaces. The bottom blowdown valves on boiler # 1 are similar to those shown in 420-WAGB-517-004, but they are in a different orientation.

3.10.15 In the presence of the shipboard operators, conduct system familiarization with installed Chem-Aqua water treatment program and troubleshooting, corrective action orientation measures per Chem-Aqua manual for the following test(s) to include but limited to:

- Make-Up Water Total Hardness
- Feedwater Total Hardness
- OH-Alkalinity Drop Test
- Conductivity and pH Test
- Sulfite Drop Test
- Flouoresceine Test

NOTE

For planning purposes, assume it will take 3 business days to go from cold iron to working pressure and temperature

3.11 Restore Boiler to Operation.

3.11.1 Upon completion of the hydrostatic test, reassemble the boiler and all components using new gaskets in accordance with TP 5162. Reassemble the boiler and all components using new gaskets. Reconnect the remote operating gear on each safety valve. Adjust and Lube Hand Easing gear and demonstrate that it operates smoothly to the Coast Guard Inspector after adjustments. Submit CFR.

NOTE

Ships force will operate the valves when bringing the boiler back online

3.11.2 Fill the steam system with treated, deionized water. The Contractor must supply the necessary boiler water treatment chemicals and deionized water for this step.

3.11.3 Perform tune up of the boiler and verify the proper operation of all automatic controls. Demonstrate to the Coast Guard Inspector that the boiler meets the pressure settings listed in Figure 804-24 in Coast Guard TP 5162. Submit a CFR recommending replacement of any defective components.

3.11.4 Boil Out. As part of the restoration and prior to the final op test, the Contractor must conduct a boil out under the supervision of the Tech Reps in accordance with ChemAqua Technical Bulletin 1-003 "Boiler Boil Out Procedures." This procedure must be provided by the Chem Aqua Tech rep.

3.12 Operational test, final. Upon completion of work, the Contractor must witness Coast Guard personnel perform a final operational test of all items or shipboard devices to be disturbed, used, repaired, or altered, to demonstrate existing operational condition including but not limited to the boiler. Submit a CFR.

3.12.1. Once the boiler has reached operational temperature and pressure, the initial operational test will last for 8 hours. The Contractor must record the following concentrations using a Contractor-provided exhaust stack analyzer at the beginning of testing, halfway through the testing and at the end of testing.

- NO_x
- SO_2
- CO
- CO_2
- O_2
- NH_3

The Contractor must also record the following items at the beginning of testing, halfway through the testing and at the end of testing. This information can be read from existing gauges in the system.

- Feedwater temperature
- Stack temperature
- Boiler pressure
- Fuel pressure

- Feedwater pressure

The Contractor must also sample the water from both boilers and the feedwater tank at the beginning of testing, halfway through the testing and at the end of testing.

- Make-Up Water Total Hardness
- Feedwater Total Hardness
- OH-Alkalinity Drop Test
- Conductivity and pH Test
- Sulfite Drop Test
- Fluoresceine Test

4. NOTES

This section is not applicable to this work item.

WORK ITEM 19: Bow Crane, Biennial Inspect and Test

1. SCOPE

1.1 Intent. This work item describes the requirements for the Contractor to inspect and test (1) Allied Systems Electro-Hydraulic Telescoping Boom Crane, Model TB60-65

1.2 Government-furnished property.

MTI	ITEM DESCRIPTION	NSN/PN	QTY	ESTIMATED COST ($/UNIT)
N	Sheave Assembly, Item 7, Figure 10-25, TP 5243	PN: 14-10A-5/8	2 ea.	$5,000

2. REFERENCES

COAST GUARD DRAWINGS

Coast Guard Drawing 420 WAGB 573-001, Rev B, Crane Pedestals Arr & Dets

Coast Guard Drawing 420 WAGB 573-002, Rev D, Boom Rests

Coast Guard Drawing 420 WAGB 573-511, Rev F, General Arrangement KB 15-45

COAST GUARD PUBLICATIONS

Coast Guard Technical Publication (TP) 5243, Nov 2013, SG811-B4-MMC-010 – Crane, Electro-Hydraulic Telescoping Boom – Model TB60-65

Surface Forces Logistic Center Technical Standard (SFLC TS) 589, 2020, Cranes

Surface Forces Logistics Center Standard Specification 0000 (SFLC Std Spec 0000), 2022, General Requirements

Surface Forces Logistics Center Standard Specification 0740 (SFLC Std Spec 0740), 2022, Welding and Allied Processes

Surface Forces Logistics Center Standard Specification 5000 (SFLC Std Spec 5000), 2022, Auxiliary Machine Systems

Surface Forces Logistics Center Standard Specification 6310 (SFLC Std Spec 6310), 2022, Requirements for Preservation of Ship Structures

OTHER REFERENCES

None

3. REQUIREMENTS

3.1 General.

3.1.1 CIR. The Contractor must submit a CIR for the inspections listed in the following paragraph(s):

- 3.2 Operational test, initial
- 3.7.7.1. Hydraulic Oil Samples 3.7.6.2. Check Swing Bearing Wear

3.1.2 Tech Rep.

3.1.2.1 The Contractor must provide the services of an OEM Authorized/licensed Tech Rep for the Allied K40-55 Crane to accomplish the following tasks on site:

- Provide manufacturer's proprietary system/equipment information, software and tools.
- Assist with and ensure compliance with manufacturer's procedures and standards during disassembly, inspection, repair, modification, calibration, and reassembly of the equipment/system. To be onsite for initial testing, groom/calibrate and final op/weight test
- Annual Crane Survey

3.1.2.1.1 The Contractor must submit the name of the Tech Rep to the COR at the Arrival Conference.

3.1.2.2 The Contractor must provide the services of an OEM Authorized/licensed Tech Rep for the Crane Smart Sytems to accomplish the following tasks on site:

- Initial operation Test
- Groom and Calibrate.
- Final Op test/weight test

3.1.2.2.1 The Contractor must submit the name of the Tech Rep to the COR at the Arrival Conference. Include the dates of services the Qualified Tech Reps will be on site as per their subcontract documentation.

3.1.3 Protective measures. The Contractor must furnish and install all protective measures in accordance with SFLC Std Spec 0000, paragraph 3.3.3 (Vessel component, space, and equipment protection).

3.1.4 Interferences. The Contractor must handle all interferences in accordance with SFLC Std Spec 0000, paragraph 3.3.5 (Interferences).

NOTE
Coast Guard personnel will operate all shipboard machinery and equipment.

3.2 Operational test, initial. Prior to commencement of work, the Contractor must witness Coast Guard personnel perform an initial operational test of all items or shipboard devices to be disturbed, used, repaired, or altered, to demonstrate existing operational condition. Submit a CIR documenting inspection, calibration and test results making any recommendations for repairs.

3.2.1 Visually inspect the crane per paragraph 3.2.1 of SFLC Std Spec 5000. Visual inspection to include removing covers to inspect crane cab and crane pedestal. Visually inspect Hydraulic Power Unit during operation. Verify operation of all flood lights. Visually inspect all foundations welds for indications of cracks.

3.2.2 In the presence of the Technical Representative and the Coast Guard Inspector Conduct a No-load Operational Test followed by a Rated Weight Tests in accordance with SFLC Std Spec 5000 Appendix B, paragraph B2.4. Upon completion of weight test conduct a Tilting Test. Ship's force will operate the equipment and the contractor, with the guidance of the technical representative must review the operation of each crane and determine any necessary repairs.

3.3 Cabin Heater. The Contractor must repair or renew the cabin heater, Item 15, Figure 10-32 of TP 5234. Conduct all electrical work in accordance with SFLC Std Spec 3042.

3.4. Hydraulic Line Bracket. The Contractor must secure the hydraulic line backet to the cylinder using a strap. Figure 1 shows the existing block, which is held in place with ratchet straps. Figure 2 shows the strap that the Contractor must acquire and install on the bow crane to keep the bracket in place.

3.5. Crane Cab. The Contractor must remove the cab from the boom, inspect the connections between the crane and boom and re-attach the cab using new hardware. Disconnected hydraulic hoses maybe reused, but they must be properly supported and plugged to prevent ingress of materials.

3.6. Boom Light. The Contractor must renew the electrical cable for the crane light from the switch in the cab to the light. The Contractor must also renew the switch. Conduct all electrical work in accordance with SFLC Std Spec 3042. Do not paint the cable after installation.

3.7. Remote Start. The Contractor must troubleshoot the remote HPU start feature of the crane in accordance with Section 4.4 of TP 5234. Conduct all electrical work in accordance with SFLC Std Spec 3042

3.8 Perform maintenance. The Contractor must accomplish the following maintenance per Table 6-2 of TP 5243.

3.8.1. "Daily or Every 10 Hours", Paragraph 6.5.1 of TP 5243.

3.8.1.1 Submit a CFR for all inspections

3.8.1.2. The Contractor must perform the Anti-2-block Assembly test in 6.5.1.5 without a load on the crane. This test may be performed in conjunction with the initial operational test.

3.8.2. "Weekly or Every 50 Hours," Paragraph 6.5.2 of TP 5243

3.8.2.1 Disregard the fresh water washdown in paragraph 6.5.2.1.

3.8.2.2. Submit a CFR for the sheave pin inspection

3.8.3. "Every 2 Weeks or Every 100 Hours," Paragraph 6.5.3 of TP 5243

3.8.4. "Monthly or Every 200 Hours," Paragraph 6.5.4 of TP 5243

3.8.4.1. The Contractor must collect and dispose of washing fluids in accordance with local, State and federal law and SFLC Std Spec 0000.

3.8.4.2. The Contractor must inspect and measure the wire rope and submit a CFR. For bidding purposes, the Contractor is NOT expected to renew the wire rope.

3.8.4.3. Wire rope must be pressure lubricated in accordance with D2.2.1.4 of SFLC Std Spec 5000. Do not utilize the wire rope lubrication techniques shown in TP 5243

3.8.4.4. Submit a CFR with the level of the swing drive planetary gear reducer transmission fluid. It will be changed in a later step.

3.8.4.5. If leakage or other deficiencies is found in paragraphs 6.5.4.6 through 6.5.4.8 and 6.5.4.10 of TP 5243, submit a CFR. Repair of these deficiencies is NOT included in the scope of this work.

3.8.5. "Every 3 months or Every 500 Hours," Paragraph 6.5.5 of TP 5243.

3.8.5.1. Submit a CFR with the level of the winch housing oil. It will be changed in a later step.

3.8.6. "Every 6 Months or Every 1000 Hours," Paragraph 6.5.6 of TP 5243

3.8.6.1 Submit a CFR with the results of the hardware inspection in Paragraph 6.5.6.1 of TP 5243.

3.8.6.2. Check Swing Bearing Wear

3.8.6.2.1. This test may be performed in conjunction with the no-load test or at a later time. The US Coast Guard is aware that the crane cannot be swung 360 degrees per the instructions in paragraph 6.5.6.2 of TP 5243.

3.8.6.2.2. The Contractor must submit a **CIR** with all measurements

3.8.7. "Annually or Every 2000 Hours," Paragraph 6.5.7 of TP 5243

3.8.7.1. Hydraulic Oil Samples. All samples referenced in this section of TP 5243 must be collected and analyzed in accordance with C2.1.31 of SFLC Std Spec 5000. Submit results with a **CIR**

3.8.7.2. Do NOT renew the oil. Samples are the only requirement.

3.8.7.2. The Contractor must renew the sheaves using GFE.

3.8.7.4 Disregard the LMI system calibration instructions in 6.5.7.7. Instead, utilize the Cranesmart LMI 5 Universal Manual at this link in section 5.2: https://cranesmart.com/support/resources

3.9 Label Plate. Install a label plate for the system in accordance with paragraph B2.9 (Label plates) of appendix B of SFLC Std Spec 5000.

3.10 Final test. After completion of all other work, in the presence of the Coast Guard Inspector and the Technical Representative the Contractor must conduct a No-load Operational Test followed by a winch brake/modified static, Dynamic and Rated Weight Test per Table 1 in accordance with SFLC Std Spec 5000 Appendix B, paragraph B2.4. Submit CFR of test results.

TABLE 1 – WEIGHT TEST

MAIN HOIST TEST WEIGHTS	
Winch Brake/Modified Static	7,400 lbs
Dynamic	7,400 lbs
Rated	6,720 lbs

3.11 Visual inspection. After load testing of weight handling equipment, a visual inspection on all load bearing parts, strength welds and any repaired areas must be made. If any cracking or deformation is sighted, or suspect, paint must be removed from the suspect area, and an NDT inspector must perform magnetic particle testing in accordance with Std Spec 0740. Submit a CFR with the results of the inspection.

3.12 Touch-up preservation. The Contractor must prepare and coat all new and disturbed exterior and interior surfaces to match existing adjacent surfaces, in accordance SFLC Std Spec 6310, 3.1.13.

4. NOTES

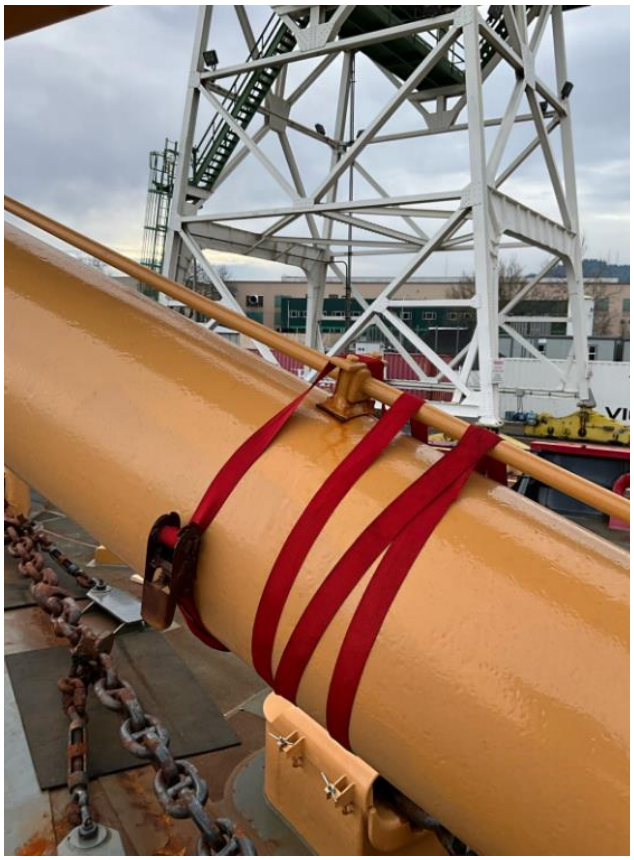

FIGURE 1. EXISTING CONDITION OF HYDRAULIC LINE BRACKET.

FIGURE 2. THE DESIRED HYDRALIC LINE BRACKET IS CIRCLED IN RED. THIS CRANE PICTURED IS THE AFT STARBOARD CRANE ABOARD THE HEALY.

FIGURE 3. BOOM LIGHT.

WORK ITEM 20: Internal Hoists, Maintenance, Inspection and Test

1. SCOPE

1.1 Intent. This work item describes the requirements for the Contractor to perform all annual scheduled maintenance and the five year maintenance and inspection for: trash hoist (2-50-2-Q), dumbwaiter (04-43-3-Q), stores hoist (1-131-2-T) and science hoist (3-131-1-T).

1.2 Government-furnished property.

None

2. REFERENCES

COAST GUARD DRAWINGS

Coast Guard Drawing 420 WAGB 573-003, Rev A, Science Hoist

Coast Guard Drawing 420 WAGB 589-005, Rev B, Science Hoist Arrangement

Coast Guard Drawing 420 WAGB 589-506, Rev C, General Arrangement Trash Hoist

Coast Guard Drawing 420 WAGB 589-507, Rev E, General Arrangement Stores Hoist

COAST GUARD PUBLICATIONS

Coast Guard Technical Publication (TP) 5223, SWBS 572, 2005, Dumbwaiter (200 Lb Capacity) – Model 20700

Coast Guard Technical Publication (TP) 5249, SWBS 589, 2003, SG825-A3-MMC-010 - 1000 Lb Capacity Stores Hoist

Coast Guard Technical Publication (TP) CG TP LR-H5-0006-V0 - 6000 Lb Capacity Science Hoist

Coast Guard Technical Publication (TP) 5251, SWBS 589, SG825-AZ-MMC-010 - 600 Lb Capacity Trash Hoist

Surface Forces Logistics Center Standard Specification 0000 (SFLC Std Spec 0000), 2022, General Requirements

OTHER REFERENCES

American Society of Mechanical Engineers (ASME) HST-3, 1999, Performance Standard for Manually Lever Operated Chain Hoist

3. REQUIREMENTS

3.1 General.

3.1.1 CIR. The Contractor must submit a CIR for the inspections listed in the following paragraph(s):

None

3.1.2 Tech Rep. The Contractor must provide the services of a licensed elevator inspector qualified to perform inspection and testing in accordance with ASME A17.2, to accomplish the following tasks on site: Perform the 5 year maintenance and inspection on all internal hoists listed.

3.1.3 Protective measures. The Contractor must furnish and install all protective measures in accordance with SFLC Std Spec 0000, paragraph 3.3.3 (Vessel component, space, and equipment protection).

3.1.4 Interferences. The Contractor must handle all interferences in accordance with SFLC Std Spec 0000, paragraph 3.3.5 (Interferences).

NOTE

Coast Guard personnel will operate all shipboard machinery and equipment.

3.2 Operational test, initial. Prior to commencement of work, the Contractor must witness Coast Guard personnel perform an initial operational test of all items or shipboard devices to be disturbed, used, repaired, or altered, to demonstrate existing operational condition. If equipment is not operable, only a visual inspection is required. Conduct a No-load Operational Test in accordance with SFLC Std Spec 5000 Appendix B, paragraph B2.4. Submit a CFR

3.3. Dumbwaiter Hoist. The Contractor must complete the inspections and lubrication listed in Paragraph 4.3.1, 4.3.2, 4.3.3, 4.3.4, 4.3.5, 4.3.6, 4.3.7, 4.3.8 and 4.3.9 of CG TP 5223. Submit a CFR with all inspection and test results

3.3.1 In the presence of the Tech Rep and the Coast Guard inspector, the Contractor must perform the five years inspection and test requirements of paragraph 4.3.9 of TP 5223.

3.4 Stores Hoist. The Contractor must complete the inspections and lubrication listed in Paragraph 4.3.1, 4.3.2, 4.3.3, 4.3.4, 4.3.5, 4.3.6, 4.3.7, and 4.3.8 of CG TP 5249. Submit a CFR with all inspection results.

3.4.1 In the presence of the Tech Rep and the Coast Guard inspector, the Contractor must perform the five years inspection and test requirements of paragraph 4.3.9 of TP 5249.

3.5. Science Hoist. The Contractor must complete the inspections and lubrication listed in Paragraph 4.3.1, 4.3.2, 4.3.3, 4.3.4, 4.3.5, 4.3.6, 4.3.7, 4.3.8 and 4.3.9 of TP LR-H5-0006-V0 (formerly CG TP 5250). Submit a CFR with all inspection results.

3.5.1 In the presence of the Tech Rep and the Coast Guard inspector, the Contractor must perform the five years inspection and test requirements of paragraph 4.3.10 of CG TP LR-H5-0006-V0.

3.6 Trash Hoist. The Contractor must complete the inspections and lubrication listed in Paragraph 4.3.1, 4.3.2, 4.3.3, 4.3.4, 4.3.5, 4.3.6, 4.3.7, 4.3.8 and 4.3.9 of CG TP 5251. The Contractor must perform the five years inspection and test requirements of paragraph 4.3.9 of CG TP 5251, in the presence of the Tech Rep and the Coast Guard inspector. Submit a CFR with all inspection results.

3.6.1 In the presence of the Tech Rep and the Coast Guard inspector, the Contractor must perform the five years inspection and test requirements of paragraph 4.3.9 of CG TP 5251.

3.7 Weight Testing. The following procedures must be completed on all four hoists in the presence of the Tech Rep and the Coast Guard inspector.

3.7.1. All test weights must be with a tolerance of plus 5% or 200 lbs, whichever is smaller.

3.7.2 Modified Static Weight Test. Hold 150% of the rated load for 10 minutes

- Verify winch brake holds without slipping
- Verify no permanent deformation or damage to any components once weight is removed.

3.7.3. Dynamic Overload Test. Raise and lower 125% of weighted capacity for three complete cycles, stopping at least twice in each direction.

- Ensure that the brake holds the dynamic load without slipping
- Check for permanent deformation or damage to components
- Check for overheating
- Ensure all controls and sensors work,
- Check for unusual vibration, noise or misalignment
- Verify that nothing is leaking.

3.7.4. Rated Load Test. Raise and lower 100% of weighted capacity for ten complete cycles, stopping at least twice in each direction.

- Ensure that the brake holds the dynamic load without slipping
- Check for permanent deformation or damage to components
- Check for overheating
- Ensure all controls and sensors work,
- Check for unusual vibration, noise or misalignment
- Verify that nothing is leaking.

3.7.5. Use the following rated loads:

- Trash Hoist: 600 lbs
- Dumbwaiter: 200 lbs
- Stores Hoist: 1000 lbs
- Science Hoist: 6000 lbs

3.7.6 After weight Testing is completed, the Contractor must fabricate and install a label plate indicating test loads and test date information for each hoist and dumbwaiter in accordance with paragraph B2.9 (Label plates) of appendix B of SFLC Std Spec 5000. Label must include applicable equipment, compartment location, test date and rated load.

3.7 Operational test, final. Upon completion of work, the Contractor must witness Coast Guard personnel perform a final operational test of all items or shipboard devices that were disturbed, used, repaired, or altered, to demonstrate operational condition. Conduct a No-load Operational Test in accordance with SFLC Std Spec 5000 Appendix B, paragraph B2.4. Submit a CFR.

3.8 Touch-up preservation. The Contractor must prepare and coat all new and disturbed exterior and interior surfaces to match existing adjacent surfaces, in accordance SFLC Std Spec 6310, 3.1.13.

4. NOTES

This section is not applicable to this work item.

WORK ITEM 21: Grey Water Holding Tank(s), Clean and Inspect

1. SCOPE

1.1 Intent. This work item describes the requirements for the Contractor to clean and inspect the following tank(s):

TABLE 1 – LIST OF TANKS

TYPE OF TANK	LOCATION	CAPACITY - 95% (GALLONS)	TANK CONTENT DISPOSAL (GALLONS)	*REQUIRED MEASUREMENT OF PITS/UT FAIRING COMPOUND KITS
Forward Grey Water	4-42-1-W	13,103	250	Pits - 100 UT - 400 Fairing Compound – 1
Aft Grey Water	4-114-0-W	4,676	50	Pits -50 UT - 200 Fairing Compound – 1/2

*** For Bidding Purposes**

1.2 Government-furnished property.

None.

2. REFERENCES

COAST GUARD DRAWINGS

Coast Guard Drawing 420-WAGB_167_2, Rev H, Manhole List

Coast Guard Drawing 420-WAGB_528_1, Rev G, Diagram of Plumbing and Int Deck Drain and Vacuum Collection System

Coast Guard Drawing 420-WAGB_801_1, Rev K, Booklet of General Drawings

COAST GUARD PUBLICATIONS

Surface Forces Logistics Center Standard Specification 0000 (SFLC Std Spec 0000), 2022, General Requirements

Surface Forces Logistics Center Standard Specification 0740 (SFLC Std Spec 0740), 2022, Welding and Allied Processes

Surface Forces Logistics Center Standard Specification 6310 (SFLC Std Spec 6310), 2022, Requirements for Preservation of Ship Structures

OTHER REFERENCES

None.

3. REQUIREMENTS

3.1 General.

3.1.1 CIR. The Contractor must submit a CIR for the inspections listed in the following paragraph(s):

- 3.7 Inspection

3.1.2 Tech Rep. The contractor must provide the services of a certified Technical Representative, holding an ASNT Central Certification Program (ACCP) Level II certification or better, or SNT-TC-TA NDT Level II or better to accomplish the following on site:

- Accomplish the applicable requirements in SFLC Std Spec 0740 Appendix C, Nondestructive Examination (Ultrasonic Inspection).

3.1.3 Protective measures. The Contractor must furnish and install all protective measures in accordance with SFLC Std Spec 0000, paragraph 3.3.3 (Vessel component, space, and equipment protection).

3.1.4 Interferences. The Contractor must handle all interferences in accordance with SFLC Std Spec 0000, paragraph 3.3.5 (Interferences). Known interferences include, but are not limited to the following:

- Piping
- Residual tank contents/fluids
- TLI's

3.1.5 Service disruption. When grey water is disrupted due to Contractor repairs, the Contractor must refer to SFLC Standard Spec 0000 par 3.2.11 to provide required temporary facilities.

NOTE

Coast Guard personnel will operate all shipboard machinery and equipment.

3.2 Operational test, initial. Prior to commencement of work, the Contractor shall witness Coast Guard personnel perform an initial operational test of all items or shipboard devices to be disturbed, used, repaired, or altered, to demonstrate existing operational condition. Submit a CFR.

3.2.1 Perform an initial operational test of each tank TLIs to demonstrate that each sensor is functional (i.e., Digital readout is displayed on DMU).

3.2.2 Ensure that there is interface/communication between the TLI sensor and the MPCMS (i.e. Digital readout at the DMU is identical to that displayed).

3.3 Tank opening. The Contractor must remove the tank manhole cover(s) and ventilate the confined spaces in accordance with SFLC Std Spec 0000, Paragraphs 3.3.1.1 and 3.3.1.2. The Contractor must

provide fall protection to cover tank manhole cover when opened for ventilation/work. The Contractor must matchmark the manhole cover lid(s) to the flange prior to removal for proper reinstallation.

3.4 Tank content and waste disposal. The Contractor must dispose of residual tank contents and any cleaning fluids in compliance with all applicable Federal, state, and local laws, ordinances and regulations. Notify the COR (in writing) at least 48 hours prior to removal of wastes and fluids. Document a complete chain of custody record of the removed tank contents and generated wastes, from the vessel to the point of final destination or delivery. Submit chain of custody record to the COR upon completion of work.

3.5 Temporary plugs. The Contractor must plug all inlet and outlet piping in the tank to prevent contaminants from entering the tank or piping system for the entire duration of the tank cleaning and inspection. Use plugs with an attached lanyard, ring or other system that will ensure plugs are not lost in the pipe openings.

3.5.1 Plug log. The Contractor must keep a written record of all installed plugs. Keep a separate list for each tank. Maintain a plug accountability log posted immediately outside the tank to prevent any of the installed temporary plugs from being lost inside the tank or left behind inside at tank closure. The log must include the type and size of each plug, installation date, and removal date. Submit this log to the COR after completion of work item via a CFR.

3.5.2 The Contractor must ensure that all plugs are removed from each tank upon completion of work in the tank.

3.6 Tank cleaning. The Contractor must clean all designated tank interior surfaces free of all foreign materials, such as residual fluid contents, sediment, sludge, rust, or biological growth, taking care not to damage the coating system (if applicable).

3.6.1 The Contractor must accomplish all requirements of SFLC Std Spec 6310, 3.1.6.4 (Surface contaminant removal) to achieve the cleanliness requirements of SSPC-SP 1, including a low-pressure (maximum 5,000 psi) freshwater wash down of the surfaces.

3.6.2 Remove cleaning media and residues continuously from the tank during the washing process. Remove any residual wash media and wipe up residual moisture with clean lint-free cloths. Wipe the interior tank structure dry and free of all cleaning agents.

3.7 Inspection. The Contractor, in the presence of the CG Inspector, must inspect all tank interior surfaces, including, but not limited to bulkheads, floor and overhead plating, structural members, manhole cover surfaces, fasteners and gasket seating surfaces. Using the Tank and Void Assessment form in General Requirements section 4.2, submit a CIR including the following, as applicable:

- Tank structural condition
- Condition of tank coating, including dimensions, percentage, location, and type of coating failure
- Tank level indicator (TLI) and/or float switch condition
- Sounding tube and striker plate condition
- Vent pipe and check valve condition
- Manhole cover, flange distortion check, and flange stud welds
- Suction and discharge piping condition

- Ladder condition
- Fastener material and condition
- Zinc anode condition, if applicable (remaining percentage,)
- Pit measurements
- Ultrasonic thickness (UT) measurements

3.7.1 Pit measurement. The Contractor must measure pits within each tank/location listed in all tanks being cleaned, in accordance with SFLC Std Spec 0740, Paragraph 3.13 (Evaluation of pitting corrosion). The results of these measurements must be included in the inspection report, showing where pit measurements were taken and the depth of the pit. For bidding purposes, use the Tables in Section 1 for number of pit measurements per tank.

3.7.2 Ultrasonic thickness (UT) measurement. The Contractor must take UT measurements in the surrounding area of any pit measuring greater than 25% of plate thickness. UT measurements must be taken in the four quadrants at an equal-distant radius from the pit center until full plate thickness is measured. UT measurements must be conducted in accordance with SFLC Std Spec 0740, Appendix C, using Coast Guard Drawings listed in Section 2. The results of these measurements (original thickness, measured thickness, and any observed cracks) and the locations where they were taken must be included in the inspection report. For bidding purposes, use the Tables in Section 1 for number of UT measurements per tank.

3.8 Substrate fairing and repair by filling Epoxy for shallow pits and small corrosions (i.e. pits < 25% or corrosions < 25%). The Contractor must repair small pin holes, shallow pitted substrates (with remaining plate thicknesses over 75% of required plate thicknesses), and fair corroded substrates (with remaining cross sections over 75% of required cross section areas), after removing coating, in accordance with SFLC Std Spec 6310 and manufacturers' instructions.

- For bidding purposes, procure the number of epoxy fairing kit(s) (0.5 Gallon/5 Kg Kit) as shown in Table 1.
- Epoxy fairing compound must meet the requirements of SFLC Std Spec 6310 Appendix C (MIL-PRF-24176 Cement, Epoxy, Metal Repair & Hull Smoothing) and be compatible with fluid in the tank.
- Turn over all unused kits to the COR.

NOTE

"Substrate fairing and repair by filling Epoxy for shallow pits and corrosions (i.e. pits < 25% or corrosions < 25%)" is a supplement barrier intending to help delay penetration.

3.9 Tank closing. The Contractor must ensure that the tank(s) remain open for approximately 24 hours after completion of any authorized repair and preservation procedures. Notify the COR at least 48 hours prior to closing the tank(s). After satisfactory inspection by the Coast Guard Inspector and completion of all authorized repairs, remove all installed temporary plugs and document removal via signature on the plug log by the Coast Guard Inspector and Contractor prior to tank closing. Close tank manhole cover(s) with new gasket material in accordance with Coast Guard Drawing 420-WAGB_167_2, in the presence of the Coast Guard Inspector. Chase threads on studs to ensure even installation of the access covers. Renew all nuts, washers, and grommets (including those that are missing) in accordance with Coast Guard Drawing 420-WAGB_167_2. Covers must be reinstalled in their proper orientation with the marks

made in paragraph 3.4. Do not use power tools to secure the manhole covers. Submit a CFR with the completed plug log.

NOTE

Coast Guard personnel will operate all shipboard machinery and equipment.

3.10 Control Panel Assembly. The Contractor must open and vacuum clean the control panel assembly. Inspect the control panel assembly for any indications of overheating or loose wiring or connections. Submit a CFR.

3.11 Operational test, post repairs. After completion of work, the Contractor must witness Coast Guard personnel demonstrate operational test of all items or shipboard devices that have been disturbed, used, repaired, altered, or installed to be in satisfactory operating condition. Submit a CFR.

3.11.1 Perform an initial operational test of each tank TLIs to demonstrate that each sensor is functional (i.e., Digital readout is displayed on DMU).

3.11.2 Ensure that there is interface/communication between the TLI sensor and the MPCMS (i.e. Digital readout at the DMU is identical to that displayed).

3.12 Touch-up preservation. The Contractor must prepare and coat all new and disturbed surfaces, and all manhole cover external surfaces to match existing adjacent surfaces in accordance with SFLC Std Spec 6310, paragraph 3.1.13 (Touch-ups and minor coating repairs). Do not paint any manhole cover fasteners.

4. NOTES

This section is not applicable to this work item.

WORK ITEM 22: Sewage Piping, Clean and Flush

1. SCOPE

1.1 Intent. This work item describes the requirements for the Contractor to clean the sewage piping system.

1.2 Government-furnished property.

None.

2. REFERENCES

COAST GUARD DRAWINGS

Coast Guard Drawing 420-WAGB_528_1, Rev F, Diagram of Plumbing & Int. Deck Drain & Vacuum Collection System

Coast Guard Drawing 420-WAGB_801_1, Rev K, Booklet of General Drawings

COAST GUARD PUBLICATIONS

Coast Guard Technical Publication (TP) 5267, Nov 2003, S9593-D5-MMC-010 – Vacuum Sewage System

Surface Forces Logistics Center Standard Specification 0000 (SFLC Std Spec 0000), 2014, General Requirements

OTHER REFERENCES

ASTM International (ASTM) D1330, 2004, Standard Specification for Rubber Sheet Gaskets

DOD-STD-2187, Aug 1987, Chemical Cleaning of Salt Water Piping Systems

3. REQUIREMENTS

3.1 General.

3.1.1 CIR. The Contractor must submit a CIR for the inspections listed in the following paragraph(s):

None.

3.1.2 Tech Rep.

Not Applicable.

3.1.3 Protective measures. The Contractor must furnish and install all protective measures in accordance with SFLC Std Spec 0000, paragraph 3.3.3 (Vessel component, space, and equipment protection).

3.1.4 Interferences. The Contractor must handle all interferences in accordance with SFLC Std Spec 0000, paragraph 3.3.5 (Interferences). Known interferences include, but are not limited to the following:

- Piping
- Toilets and urinals
- Residual fluids
- Wire runs
- Valves

3.2 Contamination prevention. The Contractor must take all precautions to prevent contamination of personnel and spaces in accordance with all applicable Federal, state, and local regulations.

3.3 Personnel qualification. The Contractor must ensure that personnel accomplishing this work are qualified and experienced in operating the pressurized water system and handling the chemicals. For each operator/cleaning technician, submit documentation of applicable experience and training obtained within the last twelve months along with the Cleaning Plan.

3.4 Operational test - initial. Prior to commencement of work, the Contractor must witness Coast Guard personnel perform an initial operational test of all items or shipboard devices to be disturbed, used, repaired, or altered, to demonstrate existing operational condition. Submit a CFR.

3.5 Cleaning plan. The Contractor must establish a plan for cleaning the designated piping system, listing the step-by-step procedures necessary to ensure that all foreign debris is removed from the piping system.

NOTE

The Coast Guard prefers pressurized water as the cleaning fluid, however, the Contractor may propose chemical cleaning as an alternative, provided that the proposed chemical cleaning agent is environmentally safe, suitable for use in marine sewage piping application, and pre-approved by the COR. The chemicals used in the cleaning (including cleaning chemicals, neutralizing compounds, and defoaming chemicals) must not cause any significant detrimental effects to the sewage piping system or any other system components.

3.5.1 Procedure requirements. Ensure that the procedure includes the following:

- Methods of cleaning.
- All safety precautions required during cleaning operations.
- List of qualified personnel who will operate machinery or handle chemicals (see paragraph 3.8 (Personnel qualification) herein).
- Locations in the piping system where cleaning will take place, and any additional fittings necessary.
- Sequence of each location that ensures all piping sections will be cleaned and all foreign debris removed.

3.5.2 Plan submittal. Submit the written plan to the COR for approval at least 48 hours prior to commencing cleaning operations.

3.5.3 SDS. Submit the Safety Data Sheet(s) for any cleaning chemicals proposed for use.

3.6 Service disruption. When sewage collection service is disrupted due to contractor repairs, the Contractor must provide temporary sanitary and sewage facilities in accordance with SFLC Standard Spec 0000 paragraph. 3.2.11 and all associated sub-paragraphs.

3.7 Clean and flush. The Contractor must clean all vacuum sewage piping which originates from a vacuum flush toilet, urinal, vacuum interface box located in fan room 01-50-2-L, and food disposal unit that collects into the Black Water collection tank (4-36-1-W). The Contractor must clean all vacuum interface boxes.

3.7.1 Toilets. The Contractor must disconnect, remove, and re-install all the toilets onboard to facilitate the pipe cleaning. Remove and install the toilets in accordance with Coast Guard TP 5267.

3.7.2 Pumps and valves. Replace system tank valve(s) with temporary spool piece(s) before cleaning. Visually inspect system pumps and valve(s); and submit a CFR. Upon completion of work, reinstall the removed tank valve(s) with new gaskets.

3.7.3 Cleaning. Continue cleaning until all the following conditions are met:

- All visible calcium carbonate deposits, solid deposits and build-up are removed from pipe walls.
- Discharge water from the piping being cleaned is free of all visible scale and deposits.

3.7.4 Inspect the piping interior using a borescope in the presence of the COR, to verify the following. Submit CFR.

3.7.4.1 Cleanliness. Verify that all solid deposits visible to the unmagnified eye have been removed. Continue the cleaning process until all visible solid deposits are removed from the pipe walls. If additional clean-out connections are needed, submit a CFR.

3.7.4.2 Pipe condition. Assess the general condition of the piping interior for excessive corrosion.

3.8 Waste disposal. The Contractor must dispose of all cleaning fluids and debris in accordance with all applicable Federal, state, and local regulations. Remove all unused chemicals from USCG property immediately upon completion of work item. Do not drain any fluids (including fresh water) into any space, bilge, or exterior location.

3.9 Gasket renewal. The Contractor must reinstall all removed valves and fittings with new gasket material conforming to ASTM D1330.

NOTE
Coast Guard personnel will operate all shipboard machinery and equipment.

3.10 Operational test – post repairs. After completion of work, the Contractor must thoroughly test, in the presence of the Coast Guard Inspector and demonstrate all items or shipboard devices that have been disturbed, used, repaired, altered, or installed to be in satisfactory operating condition. Submit a CFR.

3.10.1 Leak test. After all system components are reinstalled, the Contractor must test all disturbed piping for leaks, as follows, and submit a CFR:

- Plug all system openings (except the highest) and fill system with water to the point of overflow. Ensure that the water level does not go down (without adding any water) for sufficient time to inspect the entire system (no less than 15 minutes).
- Closely monitor the system for leaks. Repair all leaks detected.
- Repeat test and inspection until no leaks are detected.

4. NOTES

This section is not applicable to this work item.

WORK ITEM 23: Sewage Holding Tank(s), Clean and Inspect

1. SCOPE

1.1 Intent. This work item describes the requirements for the Contractor to clean and inspect the following tank(s):

TABLE 1 – LIST OF TANKS

TYPE OF TANK	LOCATION	CAPACITY - 95% (GALLONS)	TANK CONTENT DISPOSAL (GALLONS)	*REQUIRED MEASUREMENT OF PITS/UT FAIRING COMPOUND KITS
Sewage/Vacuum Collection Holding Tank (VCHT) 4-36-1-W	Bow Thruster/Sewage Treatment 4-33-0-E	920	25	Pits - 25 UT - 100 Fairing Compound – 1/2

*** For Bidding Purposes**

1.2 Government-furnished property.

None.

2. REFERENCES

COAST GUARD DRAWINGS

Coast Guard Drawing 420-WAGB_528_1, Rev G, Diagram of Plumbing and Int Deck Drain and Vacuum Collection System

Coast Guard Drawing 420-WAGB_801_1, Rev K, Booklet of General Drawings

COAST GUARD PUBLICATIONS

Coast Guard Technical Publication (TP) 5267, Nov 2003, S9593-D5-MMC-010 – Vacuum Sewage System

Surface Forces Logistics Center Standard Specification 0000 (SFLC Std Spec 0000), 2022, General Requirements

Surface Forces Logistics Center Standard Specification 0740 (SFLC Std Spec 0740), 2022, Welding and Allied Processes

Surface Forces Logistics Center Standard Specification 6310 (SFLC Std Spec 6310), 2022, Requirements for Preservation of Ship Structures

OTHER REFERENCES

None.

3. REQUIREMENTS

3.1 General.

3.1.1 CIR. The Contractor must submit a CIR for the inspections listed in the following paragraph(s):

- 3.7 Inspection

3.1.2 Tech Rep. The contractor must provide the services of a certified Technical Representative, holding an ASNT Central Certification Program (ACCP) Level II certification or better, or SNT-TC-TA NDT Level II or better to accomplish the following on site:

- Accomplish the applicable requirements in SFLC Std Spec 0740 Appendix C, Nondestructive Examination (Ultrasonic Inspection).

3.1.3 Protective measures. The Contractor must furnish and install all protective measures in accordance with SFLC Std Spec 0000, paragraph 3.3.3 (Vessel component, space, and equipment protection).

3.1.4 Interferences. The Contractor must handle all interferences in accordance with SFLC Std Spec 0000, paragraph 3.3.5 (Interferences). Known interferences include, but are not limited to the following:

- Piping
- Residual tank contents/fluids
- TLI's

3.1.5 Service disruption. When sewage is disrupted due to Contractor repairs, the Contractor must refer to SFLC Standard Spec 0000 par 3.2.11 to provide required temporary facilities.

NOTE

Coast Guard personnel will operate all shipboard machinery and equipment.

3.2 Operational test, initial. Prior to commencement of work, the Contractor shall witness Coast Guard personnel perform an initial operational test of all items or shipboard devices to be disturbed, used, repaired, or altered, to demonstrate existing operational condition. Submit a CFR.

3.2.1 The operating parameters can be found in TP 5267.

3.3 Tank opening. The Contractor must remove the tank manhole cover(s) and ventilate the confined spaces in accordance with SFLC Std Spec 0000, Paragraphs 3.3.1.1 and 3.3.1.2. The Contractor must provide fall protection to cover tank manhole cover when opened for ventilation/work. The Contractor must matchmark the manhole cover lid(s) to the flange prior to removal for proper reinstallation.

3.4 Tank content and waste disposal. The Contractor must dispose of residual tank contents and any cleaning fluids in compliance with all applicable Federal, state, and local laws, ordinances and regulations. Notify the COR (in writing) at least 48 hours prior to removal of wastes and fluids. Document a complete chain of custody record of the removed tank contents and generated wastes, from

the vessel to the point of final destination or delivery. Submit chain of custody record to the COR upon completion of work via CFR.

3.5 Temporary plugs. The Contractor must plug all inlet and outlet piping in the tank to prevent contaminants from entering the tank or piping system for the entire duration of the tank cleaning and inspection. Use plugs with an attached lanyard, ring or other system that will ensure plugs are not lost in the pipe openings.

3.5.1 Plug log. The Contractor must keep a written record of all installed plugs. Keep a separate list for each tank. Maintain a plug accountability log posted immediately outside the tank to prevent any of the installed temporary plugs from being lost inside the tank or left behind inside at tank closure. The log must include the type and size of each plug, installation date, and removal date. Submit this log to the COR after completion of work item via a CFR.

3.5.2 The Contractor must ensure that all plugs are removed from each tank upon completion of work in the tank.

3.6 Tank cleaning. The Contractor must clean all designated tank interior surfaces free of all foreign materials, such as residual fluid contents, sediment, sludge, rust, or biological growth, taking care not to damage the coating system (if applicable).

3.6.1 The Contractor must accomplish all requirements of SFLC Std Spec 6310, 3.1.6.4 (Surface contaminant removal) to achieve the cleanliness requirements of SSPC-SP 1, including a low-pressure (maximum 5,000 psi) freshwater wash down of the surfaces.

3.6.2 Remove cleaning media and residues continuously from the tank during the washing process. Remove any residual wash media and wipe up residual moisture with clean lint-free cloths. Wipe the interior tank structure dry and free of all cleaning agents.

3.7 Inspection. The Contractor, in the presence of the CG Inspector, must inspect all tank interior surfaces, including, but not limited to bulkheads, floor and overhead plating, structural members, manhole cover surfaces, fasteners and gasket seating surfaces. Using the Tank and Void Assessment form in General Requirements section 4.2, submit a CIR including the following, as applicable:

- Tank structural condition
- Condition of tank coating, including dimensions, percentage, location, and type of coating failure
- Tank level sensor switches (inspect and test)
- Manhole cover, flange distortion check, and flange stud welds
- Suction and discharge piping condition
- Fastener material and condition
- Zinc anode condition, if applicable (remaining percentage)
- Sewage Ejectors
- Pit measurements
- Ultrasonic thickness (UT) measurements

3.7.1 Pit measurement. The Contractor must measure pits within each tank/location listed in all tanks being cleaned, in accordance with SFLC Std Spec 0740, Paragraph 3.13 (Evaluation of pitting corrosion).

The results of these measurements must be included in the inspection report, showing where pit measurements were taken and the depth of the pit. For bidding purposes, use the Tables in Section 1 for number of pit measurements per tank.

3.7.2 Ultrasonic thickness (UT) measurement. The Contractor must take UT measurements in the surrounding area of any pit measuring greater than 25% of plate thickness. UT measurements must be taken in the four quadrants at an equal-distant radius from the pit center until full plate thickness is measured. UT measurements must be conducted in accordance with SFLC Std Spec 0740, Appendix C, using Coast Guard Drawings listed in Section 2. The results of these measurements (original thickness, measured thickness, and any observed cracks) and the locations where they were taken must be included in the inspection report. For bidding purposes, use the Tables in Section 1 for number of UT measurements per tank.

3.8 Substrate fairing and repair by filling Epoxy for shallow pits and small corrosions (i.e. pits < 25% or corrosions < 25%). The Contractor must repair small pin holes, shallow pitted substrates (with remaining plate thicknesses over 75% of required plate thicknesses), and fair corroded substrates (with remaining cross sections over 75% of required cross section areas), after removing coating, in accordance with SFLC Std Spec 6310 and manufacturers' instructions.

- For bidding purposes, procure the number of epoxy fairing kit(s) (0.5 Gallon/5 Kg Kit) as shown in Table 1.
- Epoxy fairing compound must meet the requirements of SFLC Std Spec 6310 Appendix C (MIL-PRF-24176 Cement, Epoxy, Metal Repair & Hull Smoothing) and be compatible with fluid in the tank.
- Turn over all unused kits to the COR.

NOTE

"Substrate fairing and repair by filling Epoxy for shallow pits and corrosions (i.e. pits < 25% or corrosions < 25%)" is a supplement barrier intending to help delay penetration.

3.9 Ejectors. The Contractor must remove, disassemble, clean, inspect and reinstall both Sewage Ejectors in accordance with Coast Guard Tech Pub 5267 Section 4.2.1 using new gaskets and hardware.

3.10 Tank closing. The Contractor must ensure that the tank(s) remain open for approximately 24 hours after completion of any authorized repair and preservation procedures. Notify the COR at least 48 hours prior to closing the tank(s). After satisfactory inspection by the Coast Guard Inspector and completion of all authorized repairs, remove all installed temporary plugs and document removal via signature on the plug log by the Coast Guard Inspector and Contractor prior to tank closing. Close tank manhole cover(s) with new gasket material in accordance with Coast Guard TP 5267, in the presence of the Coast Guard Inspector. Chase threads on studs to ensure even installation of the access covers. Renew all nuts, washers, and grommets (including those that are missing) in accordance with Coast Guard TP 5267. Covers must be reinstalled in their proper orientation with the marks made in paragraph 3.4. Do not use power tools to secure the manhole covers. Submit a CFR with the completed plug log.

NOTE

Coast Guard personnel will operate all shipboard machinery and equipment.

3.11 Control Panel Assembly. The Contractor must open and vacuum clean the control panel assembly. Inspect the control panel assembly for any indications of overheating or loose wiring or connections. Check for any extinguished lights. Submit a CFR.

3.12 Operational test, post repairs. After completion of work, the Contractor must witness Coast Guard personnel demonstrate operational test of all items or shipboard devices that have been disturbed, used, repaired, altered, or installed to be in satisfactory operating condition. Submit a CFR.

3.12.1 The Contractor must check the Vacuum Pressure Switches for proper adjustment. If needed, adjust in accordance with TP 5267 Section 4.2.3.2.

3.12.2 The Contractor must ensure the system operates in all configurations in accordance with TP 5267.

3.13 Touch-up preservation. The Contractor must prepare and coat all new and disturbed surfaces, and all manhole cover external surfaces to match existing adjacent surfaces in accordance with SFLC Std Spec 6310, paragraph 3.1.13 (Touch-ups and minor coating repairs). Do not paint any manhole cover fasteners.

4. NOTES

This section is not applicable to this work item.

WORK ITEM 24: Main Motor Lube Oil Tank Heater, Inspect

1. SCOPE

1.1 Intent. This work item describes the requirements for the Contractor to inspect and test the steam heater coil in the following Main Motor Lube Oil Tank(s) in the Lower Main Motor Room.

TANK#	LOCATION	SERVICE
5-112-1-F	4-102-0-E	#1 Main Motor Lube Oil Sump
5-112-2-F	4-102-0-E	#2 Main Motor Lube Oil Sump

1.2 Government-furnished property.

None.

2. REFERENCES

COAST GUARD DRAWINGS

Coast Guard Drawing 420-WAGB_262_8, Rev C, Diagram Main Motor, Thrust, Line Shaft Bearing Lube Oil Service System

Coast Guard Drawing 420-WAGB_535_1, Rev N, Diagram Steam, Feed & Condensate System

Coast Guard Drawing 420-WAGB_801_1, Rev K, Booklet of General Drawings

COAST GUARD PUBLICATIONS

Surface Forces Logistics Center Standard Specification 0000 (SFLC Std Spec 0000), 2022, General Requirements

Surface Forces Logistics Center Standard Specification 0740 (SFLC Std Spec 0740), 2022, Welding and Allied Processes

Surface Forces Logistics Center Standard Specification 5000 (SFLC Std Spec 5000), 2022, Auxiliary Machinery Systems

Surface Forces Logistics Center Standard Specification 6310 (SFLC Std Spec 6310), 2022, Requirements for Preservation of Ship Structures

OTHER REFERENCES

None.

3. REQUIREMENTS

3.1 General.

3.1.1 CIR. The Contractor must submit a CIR for the inspections listed in the following paragraph(s):

None.

3.1.2 Tech Rep.

Not Applicable.

3.1.3 Protective measures. The Contractor must furnish and install all protective measures in accordance with SFLC Std Spec 0000, paragraph 3.3.3 (Vessel component, space, and equipment protection).

3.1.4 Interferences. The Contractor must handle all interferences in accordance with SFLC Std Spec 0000, paragraph 3.3.5 (Interferences). Known interferences include, but are not limited to the following:

- Piping
- Lube Oil
- Valves
- Wire runs
- Equipment

3.2 Operational test - initial. Prior to commencement of work, the Contractor must witness Coast Guard personnel perform an initial operational test of all items or shipboard devices to be disturbed, used, repaired, or altered, to demonstrate existing operational condition. Submit a CFR.

3.3 Lube oil tank opening. The Contractor must remove the tank manhole cover(s) and ventilate the confined spaces in accordance with SFLC Std Spec 0000, Paragraphs 3.3.1.1 and 3.3.1.2. The Contractor must provide fall protection to tank manhole cover when opened for ventilation/work.

3.4 Tank content and waste disposal. The Contractor must dispose of all tank contents (approximately 500 gallons per tank) and any cleaning fluids in compliance with all applicable Federal, state, and local laws, ordinances and regulations. Notify the COR (in writing) at least 48 hours prior to removal of wastes and fluids. Document a complete chain of custody record of the removed tank contents and generated wastes, from the vessel to the point of final destination or delivery. Submit chain of custody record to the COR upon completion of work.

3.5 Temporary plugs. The Contractor must plug all inlet and outlet piping in the tank to prevent contaminants from entering the tank or piping system for the entire duration of the tank cleaning and inspection. Use plugs with an attached lanyard, ring or other system that will ensure plugs are not lost in the pipe openings.

3.5.1 Plug log. The Contractor must keep a written record of all installed plugs. Keep a separate list for each tank. Maintain a plug accountability log posted immediately outside the tank to prevent any of the installed temporary plugs from being lost inside the tank or left behind inside at tank closure. The log must include the type and size of each plug, installation date, and removal date. Submit this log to the COR after completion of work item via a CFR.

3.5.2 The Contractor must ensure that all plugs are removed from each tank upon completion of work in the tank.

3.6 Tank cleaning. The Contractor must clean all designated tank interior surfaces free of all foreign materials, such as residual water, sediment, sludge, rust, or biological growth, taking care not to damage the coating system (if applicable).

3.6.1 The Contractor must accomplish all requirements of SFLC Std Spec 6310, 3.1.6.4 (Surface contaminant removal) to achieve the cleanliness requirements of SSPC-SP 1, including a low-pressure (maximum 5,000 psi) freshwater wash down of the surfaces.

3.6.2 Remove cleaning media and residues continuously from the tank during the washing process. Remove any residual wash media and wipe up residual moisture with clean lint-free cloths. Wipe the interior tank structure dry and free of all cleaning agents.

3.7 Inspection. The Contractor, in the presence of the CG Inspector, must inspect all tank interior surfaces, including, but not limited to bulkheads, floor and overhead plating, structural members, manhole cover surfaces, fasteners and gasket seating surfaces. Using the Tank and Void Assessment form in General Requirements section 4.2, submit a CFR including the following, as applicable:

- Tank structural condition
- Condition of tank coating, including dimensions, percentage, location, and type of coating failure
- Tank level indicator (TLI) and/or float switch condition
- Sounding tube and striker plate condition
- Vent pipe and check valve condition
- Manhole cover, flange distortion check, and flange stud welds
- Suction and discharge piping condition
- Ladder condition (if applicable)
- Fastener material and condition
- Heating coil condition

3.8 Heating coil hydrostatic test. The Contractor must hydrostatically test the heating coil in the designated tanks in accordance with SFLC Std Spec 0740, Appendix C, Hydrostatic Test. Ensure zero leakage from or permanent deformation of pressure containing parts. Test coil to 68psig. Submit CFR.

3.8.1 After successful test, blow the coils dry. Collect and dispose of test water.

3.9 Steam piping component inspections. The Contractor must disassemble, clean and inspect the following components in accordance with SFLC Std Spec 5000 paragraph 3.2.3 “Disassemble and inspect” using CG Drawing 420-WAGB_538_1 as guidance. Submit CFR.

- Steam traps #243 & #244
- Check valves STM-V-171 and STM-V-173
- Strainers STM-F-20 and STM-F-21
- Regulating valves STM-V-378 & STM-V-379

3.9.1 Reassemble all piping components using new gaskets and hardware in accordance with CG Drawing 420-WAGB_538_1.

3.10 Tank closing. The Contractor must ensure that the tank(s) remain open for at least 24 hours after completion of any authorized repair and preservation procedures. Notify the COR at least 48 hours prior to closing the tank(s).

3.10.1 After satisfactory inspection by the Coast Guard Inspector and completion of all authorized repairs, remove all installed temporary plugs and document removal via signature on the plug log by the Coast Guard Inspector and Contractor prior to tank closing.

3.10.2 Close tank manhole cover(s) with new gasket material conforming to AMS C-6183A. Chase threads on studs to ensure even installation of the access covers. Renew all stud cotton grommets (as applicable) upon reinstallation of manhole cover(s).

3.10.2.1 Renew any damaged or non-monel nuts with Nickel-Copper alloy (monel) nuts meeting QQ-N-281, Class A or B. The nuts and bolts shall be of different classes to prevent galling. Existing undamaged fasteners meeting this specification may be reused. The Contractor must renew up to 10% of missing or damaged nuts and washers. If nylon insert/ nyloc nuts were previously being used, the contractor must renew 100% of the nylon insert/nyloc nuts.

3.11 The Contractor must refill both tanks with the type and grade oil that was removed, consult with the CG Inspector and CG Drawing 420-WAGB_262_8.

NOTE
Coast Guard personnel will operate all shipboard machinery and equipment.

3.12 Operational test – post repairs. After completion of work, the Contractor must witness Coast Guard personnel demonstrate operational test of all items or shipboard devices that have been disturbed, used, repaired, altered, or installed to be in satisfactory operating condition. Submit a CFR.

4. NOTES

This section is not applicable to this work item.

WORK ITEM 25: Ship Service Air Compressor, Overhaul

1. SCOPE

Intent. This work item describes the requirements for the Contractor to overhaul the Nash Engineering Model AD-203 Ship Service Air Compressor(s) listed in Table 1.

Table 1 – LIST OF COMPRESSORS

EQUIPMENT	LOCATION	SERIAL #
#1 Ship Service Air Compressor	AMR #1 - 4-63-0-E	N000388
#2 Ship Service Air Compressor	AMR #2 – 4-75-0-E	N000386
#3 Ship Service Air Compressor	AMR #6 – 2-75-0-E	N000387

Government-furnished property.

MTI	ITEM DESCRIPTION	NSN/PN	QTY	ESTIMATED COST ($/UNIT)
N	Lobe (Figure 7-14-19)	P/N: 14-3098-UNLobe	3	$23,839

2. REFERENCES

COAST GUARD DRAWINGS

Coast Guard Drawing 420-WAGB_551_6, Rev K, Diagram Ship Service and Control Air System

Coast Guard Drawing 420-WAGB_801_1, Rev K, Booklet of General Drawings

COAST GUARD PUBLICATIONS

Coast Guard Technical Publication (TP) 5204, T6220-A4-MMM-010 – Air Compressor, Ship's Service

Surface Forces Logistics Center Standard Specification 0000 (SFLC Std Spec 0000), 2022, General Requirements

Surface Forces Logistics Center Standard Specification 3020 (SFLC Std Spec 3020), 2022, Overhaul AC Electrical Motors

Surface Forces Logistics Center Standard Specification 3100 (SFLC Std Spec 3100), 2022, Inspect, Test And Recondition AC Synchronous Machines In-Place

Surface Forces Logistics Center Standard Specification 6310 (SFLC Std Spec 6310), 2022, Requirements for Preservation of Ship Structures

OTHER REFERENCES

None

3. REQUIREMENTS

3.1 General. The system is described by Coast Guard TP 5204, Coast Guard Drawing 420-WAGB_551_6 and Table 2. Coast Guard Drawing 420-WAGB_801_1 shows the work area(s).

TABLE 2 – COMPRESSOR CHARACTERISTICS

ITEM	SPECIFICATION
Service	Ship Service
Compressor Type	Liquid Ring, Horizontal, pedestal
Capacity	200 cubic feet per minute (*SFCM)
Working Pressure	125 pounds per square inch gauge
Sealing Fluid	Fresh water: Recirculated, makeup required to maintain separator level
Cooling Fluid	Fresh Water: 48 gallons per minute, 95°F, maximum
PIPE CONNECTIONS	
Air Discharge	2 inches - NPTF
Initial Prime and Fresh Water Make-up	½ inches – NPTF
Liquid Drain	½ inches – NPTF
Cooling Water In	2 inches - NPTF
Cooling Water Out	2 inches - NPTF
MOTOR CHARACTERISTICS	
Manufacturer	Reliance Electric
Frame	405STS Marine Duty
Rating	100 HP, 1780 RPM
Operating Power	440 VAC, 3-Phase, 60 Hertz

3.1.1 CIR.

None.

3.1.2 Tech Rep.

None.

3.1.3 Protective measures. The Contractor must furnish and install all protective measures in accordance with SFLC Std Spec 0000, paragraph 3.3.3 (Vessel component, space, and equipment protection).

3.1.4 Interferences. The Contractor must handle all interferences in accordance with SFLC Std Spec 0000, paragraph 3.3.5 (Interferences).

3.1.5 Fluid handling. The Contractor must remove and dispose of all removed fluids in accordance with all applicable Federal, state, and local regulations.

NOTE

Coast Guard personnel will operate all shipboard machinery and equipment.

3.2 Operational test, initial. Prior to commencement of work, the Contractor must witness Coast Guard personnel perform an initial operational test of all items or shipboard devices to be disturbed, used, repaired, or altered, to demonstrate existing operational condition. Submit a CFR.

3.2.1 Prior to securing the system, check all air receivers for leaks around all fittings attached to the tank and manhole covers using soapy water. Submit CFR.

3.3 Compressor Overhaul. The Contractor must disassemble, inspect, and reassemble each compressor assembly listed in Table 1 in accordance with Coast Guard Tech Pub 5204. In addition to the procedures listed in TP 5204, the Contractor must renew the Lobes in all three compressors; the last inspection in 2024 revealed excessive wear.

3.3.1 Disassembly. The Contractor must disassemble the air compressor(s) and sub-assemblies in accordance with Chapter 6 paragraphs 6-8 and 6-9 of Coast Guard Tech Pub 5204.

3.3.1.1 Remove and retain the plugs in the lobes for reinstallation into the new lobes that are provided as GFE; unless the new lobes have the plugs already installed.

3.3.2 Inspection. The Contractor must clean and inspect all components of the disassembled compressor(s) and sub-assemblies in accordance with Chapter 6 paragraphs 6-10 of Coast Guard Tech Pub 5204. Submit CFR. For bidding purposes, the Contractor must assume all components are serviceable (by cleaning or burr removal by smoothing and light filing). Renewal or machining of any components, other than those indicated in this work item, will be the subject of a contract change.

3.3.2.1 Inspect the AC Motor to compressor coupling for excessive wear.

3.3.2.2 Open and vacuum clean the control panel assembly. Inspect the control panel assembly for any indications of overheating, loose wiring or connections and burned-out lamps.

3.3.3 Reassembly. The Contractor must reassemble the air compressor(s) and sub-assemblies in strict compliance with the procedures outlined in Chapter 6 of Coast Guard Tech Pub 5204. Submit final compressor assembly measurements (TP 5204 Figures 6-14, 6-15, 6-16, and 6-18) via CFR.

3.3.3.1 The Contractor must provide and renew all air filters, pedestal bearings, gaskets, seals, o-rings, slingers, and lock washers.

NOTE

The contractor may elect to remove the motor(s) from the cutter for inspection and testing, performing the relevant requirements of SFLC Std Spec 3020 instead of 3100.

3.3.4 Electric Motor(s). The Contractor must, in accordance with SFLC Std Spec 3100, perform the requirements paragraphs listed in Table 3.

TABLE 3 - MOTOR INSPECTION & TESTING REQUIREMENTS

STD SPEC 3100 PARAGRAPH	TITLE
3.1 and all sub paragraphs	General
3.2.1	Access cover removal.
3.2.3.1	Visual inspections
3.2.3.3 through 3.2.3.5	Insulation Tests
3.2.4 and 3.2.5	Cleaning Methods
3.4.1 thru 3.4.1.2	Alignment and Lubrication
3.5	Operational Test

NOTE

Coast Guard personnel will operate all shipboard machinery and equipment.

3.4 Operational Test of Overhauled Compressor(s). The Contractor must conduct a thorough test of the compressor system. Submit results via CFR using the Compressor/Motor Operational Data Sheet in Section 4 of this work item.

3.4.1 Cold Insulation Resistance. Measure and record the cold insulation resistance of the motor(s) and controller(s), interconnected as one unit, and the motor temperature. Record the temperature corrected resistance, minimum corrected insulation resistance is 4 megohms.

3.4.2 Measure and record the input voltage per phase. Verify the dip switch setting to provide adequate protection to the motor. Record the settings and ampere value. Check the rotation of the motor by jogging only. Check the local start/stop capability by jogging only. Record completion of jogging tests.

3.4.3 Operate overhauled compressor(s) for a minimum of one hour. Check for any leaks. Record the following information:

- Motor Speed
- Motor current
- Motor volts
- Suction and discharge pressure
- Satisfactory operation (Y/N, no excessive vibration, foundation nuts remain tight)

3.4.4 Observe by hand the temperature of the motor bearings and frames. If excessive, record with a thermometer.

3.4.5 Hot Insulation Resistance. Measure and record the temperature corrected hot insulation resistance, which must be less than 4 megohms.

3.4.6 Verify and record the automatic Lead/Lag/Standby function for all three possible lineups of lead compressors using Table 4. Submit results via CFR.

TABLE 4 - AUTOMATIC LEAD/LAG/STANDBY VERIFICATION

COMPRESSOR	EXPECTED START	ACTUAL START	EXPECTED STOP	ACTUAL STOP

Lead Compressor #1	115		125	
Lag Compressor #2	110		120	
Standby Compressor #3	105		115	
Lead Compressor #2	115		125	
Lag Compressor #3	110		120	
Standby Compressor #1	105		115	
Lead Compressor #3	115		125	
Lag Compressor #1	110		120	
Standby Compressor #2	105		115	

3.4.7 Performance Test. With the ship service air receivers empty, line up the overhauled compressor to the receivers. Charge the receivers to 125 PSIG, record the elapsed time from compressor start to stop, submit via a CFR.

3.4.8 Submit the completed Compressor/Motor Operational Data Sheet via CFR.

3.5 Touch-up preservation. The Contractor must prepare and coat all disturbed surfaces to match existing adjacent surfaces in accordance with SFLC Std Spec 6310, paragraph 3.1.13 (Touch-ups and minor coating repairs.)

4. NOTES

COMPRESSOR/MOTOR OPERATIONAL DATA SHEET

Unit:			Date:		
NAMEPLATE DATA					
Motor		Controller		Compressor	
MFR		MFR		MFR	
Volts		Volts		Model #	
Phase/Hz		Type/Model		Serial Number	
Type/Model		NEMA size			
RPM		HP			
Frame		Serial Number			
Insulation Class					
Service Factor					
Serial Number					

OPERATIONAL TEST DATA						
Ambient Temperature			Relative Humidity			
Cold IR		Motor Temp			Corrected Cold IR	
Input Voltage	Phase AB		Phase BC		Phase CA	
Dip Switch Setting			Amperage			
Rotation (sat/unsat)		Start/Stop (sat/unsat)			Ind. Lt (sat/unsat)	

OPERATING DATA								
Time	Speed	Current (amps)			Voltage			Discharge Pressure
(min)	RPM	A	B	C	AB	BC	CA	(PSIG)
00								
15								
30								
45								
60								
Satisfactory Operation (noise, vibration, etc.)								
Hot IR		Motor Temp					Corrected Hot IR	

WORK ITEM 26: Flex Hose Assemblies, Renew

1. SCOPE

1.1 Intent. This work item describes the requirements for the Contractor to renew hose assemblies identified in Table 1.

1.2 Government-furnished property.

None.

2. REFERENCES

COAST GUARD DRAWINGS

Coast Guard Drawing 420-WAGB_233_517, Rev D, Lube Oil Diagram

Coast Guard Drawing 420-WAGB_233_518, Rev D, Fuel Oil System, Diesel Oil

Coast Guard Drawing 420-WAGB_261_1, Rev F, Fuel Service System

Coast Guard Drawing 420-WAGB_262_5, Rev C, Main Engine Lube Oil Service System

Coast Guard Drawing 420-WAGB_264_1, Rev F, Lube Oil Transfer & Purification System

Coast Guard Drawing 420-WAGB_581_502, Rev D, Series 274 Anchor Windlass HPU General Assembly

Coast Guard Drawing 420-WAGB_581_503, Rev C, Hydraulic Schematic Series 274 Anchor Windlass

Coast Guard Drawing 420-WAGB_801_001, Rev K, Booklet of General Drawings

COAST GUARD PUBLICATIONS

Surface Forces Logistics Center Standard Specification 0000 (SFLC Std Spec 0000), 2022, General Requirements

Surface Forces Logistics Center Standard Specification 5000 (SFLC Std Spec 5000), 2022, Auxiliary Machine Systems

OTHER REFERENCES

Coast Guard Technical Publication (TP) 5017, 01-OCT-22, Main Diesel Engine (MDE) Model 12ZAV40S

Coast Guard Technical Publication (TP) 5224, 19-JUL-18, S9581-BW-MMC-010 – Windlass, Anchor

3. REQUIREMENTS

3.1 General.

3.1.1 CIR.

None.

3.1.2 Tech Rep.

Not Applicable.

3.1.3 Protective measures. The Contractor must furnish and install all protective measures in accordance with SFLC Std Spec 0000, paragraph 3.3.3 (Vessel component, space, and equipment protection).

3.1.3.1 Protective measures, hydraulic system(s). Maintain existing hydraulic system cleanliness and take all necessary precautions to prevent the introduction of contaminants into the hydraulic system.

3.1.4 Interferences. The Contractor must handle all interferences in accordance with SFLC Std Spec 0000, paragraph 3.3.5 (Interferences). Known interferences include, but are not limited to the following:

- Deck plates
- Piping
- Electrical wiring & cables
- Machinery

NOTE

Coast Guard personnel will operate all shipboard machinery and equipment.

3.2 Operational test, initial. Prior to commencement of work, the Contractor must witness Coast Guard personnel perform an initial operational test of all items or shipboard devices to be disturbed, used, repaired, or altered, to demonstrate existing operational condition. Submit a CFR.

3.2 Hose renewal. The Contractor must renew the hose assemblies for the equipment listed in Table 1 in accordance with SFLC Std Spec 5000, Appendix C, Paragraph C2.2 (Hose assemblies). Notify the CG Inspector at least 24 hours prior to removing hoses.

3.3.1 Hose inspection and verification. The attached tables show an approximation of hose lengths, sizes, part numbers, and fittings to be renewed that are listed for bidding purposes only. The Contractor must validate the hoses and fittings requiring renewal, noting any deviations from the tables prior to ordering materials. To prevent potential delays, submit a CIR providing proof of procurement of materials for the new hoses.

3.3.2 Prior to disconnecting each hose, the Contractor must record equipment, supply, and return line information for use in later reconnection. Temporarily tag/label the hoses and transfer tags/labels to the new hoses to aid in reinstallation.

3.3.3 System fluid disposal. The Contractor must drain all existing fluids from the designated hoses; dispose of removed fluids in accordance with all applicable Federal, state, and local regulations. In the

process of removing hoses, the Contractor must not dispose any fluid in tanks or bilges. Submit a CFR documenting the amount of fluids removed.

NOTE

Rubber gloves and rags of any kind are prohibited from being used to prevent leaking from hoses and for system protection. Plastic may be used only when arrangement or configuration prevents the use of the other sealing methods below.

3.3.4 Immediately after disconnecting or removing hoses, the Contractor must completely seal all openings to the rest of the system using threaded caps, threaded plugs, or bolt-on blanks made of durable plastic or sheet-metal that is no less than 1/16-inch thick.

3.3.5 The Contractor must template the length of the new hose length from each removed hose. New hose type and size must be determined from hose removed. Select hoses may require in-place measurement and remain in place until replacement hoses are ready for installation to minimize system down time. If hose has excess length, verify with CG inspector if excess length is required. Renew hose end fittings. Renew all o-rings, seals, two-part clamps, and mounting bolts. Dispose of removed hoses in accordance with all applicable Federal, state, and local regulations. Submit a CFR for any additional hose connections that require replacement not on the renewed hose.

3.3.6 Hydrostatic test. The Contractor must hydrostatically test all new hose assemblies with their attached fittings. Test pressure must be 150% of the rated working pressure of the hose. Ensure no leakage from or permanent deformation of pressure-containing parts by repairing all leaks and discrepancies. Submit a CFR documenting all certifications of pressure test results.

3.3.7 Flush the hoses following hydrostatic testing and cap the ends to prevent contamination. Flush to a condition free of grease, oil, flux, scale, dirt, loose particles or loose corrosion products, and all other contamination foreign to the base material of the surface.

3.3.9 Fluid renewal. The Contractor must renew all removed system fluids. Verify the replacement fluid type and quantity with the Coast Guard Inspector prior to reintroduction into the system.

3.3.10 Weatherization. Wrap all hose end fittings exposed to weather with a suitable commercially available protective tape in accordance with SFLC Std Spec 5000 Appendix C2.2.1.2.2.

3.3.11 Hose tags. The Contractor must provide new stamped or engraved metal hose tags with the following bulleted information, in accordance with SFLC Std Spec 5000, Figure C-1. Tag installation must be done in a manner that does not interfere with the normal hose flexing motion. Attach hose tags to their respective hose using metal strapping. Verify the tag can be slightly moved by hand, allowing the hose to expand and contract as designed while minimizing chaffing.

- Hose Log Item Number (Serial Number)
- Hydrostatic Test Pressure (psi)
- Hydrostatic Test Date (DD/MM/YY)
- Service Life (Replacement Date, 12 years following installation date) Date (QTR "Q"/FY)

3.3.12 Hose bracket and hanger inspection. The contractor must inspect all hangers and brackets for the hoses listed in Table 1. Submit a CFR detailing any needed repairs.

3.3.13 Chaffing gear. The contractor must install chaffing gear where any hose makes contact with another structure. Hoses on moving machinery must be checked through the full range of motion to verify the need for chaffing gear.

3.3.14 Flange shielding: The contractor must reinstall flange shielding, as applicable, following leak testing.

3.4 Hose Documentation. For each renewed hose assembly, the Contractor must submit, at a minimum, the information listed below in Microsoft Excel format. Submit information via CFR.

- Hose Number
- System
- Associated Assembly (i.e. A/C Inlet, Oil Cooler Return, etc.)
- Item (Hose, Expansion Joint, etc.)
- Location (Compartment Number)
- Hose Length (in.)
- Hose Diameter (in.)
- Hose Brand
- Hose Part Number
- Hose Construction/Type (Synth Rubber, Teflon, Metal, Plastic, etc.)
- Fitting #1 Description/Material
- Fitting #1 Brand
- Fitting #1 Part Number
- Fitting #2 Description/Material
- Fitting #2 Brand
- Fitting #2 Part Number
- Hose Rated Pressure (psi)
- Hydrostatic Test Pressure (psi)
- Hydrostatic Test Date
- Hose Replacement Date

NOTE

Coast Guard personnel will operate all shipboard machinery and equipment.

3.5 Operational test, post repairs. After completion of work, the Contractor must witness Coast Guard personnel perform an operational test to demonstrate all items or shipboard devices that have been disturbed, used, repaired, altered, or installed to be in satisfactory operating condition. Submit a CFR.

3.6 Touch-up preservation. The Contractor must prepare and coat all new and disturbed exterior and interior surfaces to match existing adjacent surfaces, in accordance with SFLC Std Spec 6310. Abide by all touch-up requirements outlined in SFLC Std Spec 6310, 3.1.13.

4. NOTES

TABLE 1 – HOSE PARTICULARS

#	HOSE #	SYSTEM	DESC	LGTH	SIZE	FITTING 1	FITTING 2
1	1MDELOS-F-008	#1 Main Diesel Engine	L/O Pump Suction	Unk	Unk	Expansion Joint	Expansion Joint
2	2MDELOS-F-008	#2 Main Diesel Engine	L/O Pump Suction	Unk	Unk	Expansion Joint	Expansion Joint
3	4MDELOS-F-008	#4 Main Diesel Engine	L/O Pump Suction	Unk	Unk	Expansion Joint	Expansion Joint
4	2MDE-L/O-006	Main Diesel Engine #2	Lube Oil to Gauge	14	3/8	BSP	Flat Sefas
5	1MDE-L/O-004	Main Diesel Engine #1	Lube Oil Suction to Gauge	20	1 1/4	Straight	Straight
6	1MDE-L/O-005	Main Diesel Engine #1	Lube Oil Discharge Pressure to Gauge	20	1 1/4	Straight	Straight
7	1MDESH-001	Main Diesel Engine #1	Sump Heater	8.5	1 1/2	JF1-30	NM1-24
8	2MDESH-001	Main Diesel Engine #2	Sump Heater	8.25	1 1/2	JF1-30	NM1-24
9	4MDESH-001	Main Diesel Engine #4	Sump Heater	8.25	1 1/2	JF1-30	NM1-24
10	2-FS-F-1	Main Diesel Engine #2	Fuel Oil Supply from Coalescer	30	2	Flanged	90 DEG DOGLEG
11	2-FS-F-2	Main Diesel Engine #2	Fuel Oil Return	29.5	2	Flanged	90 DEG DOGLEG
12	2-FS-F-5	Main Diesel Engine #2	Fuel Oil to Gauge	14	3/8	BSP	Flat Serfas
13	2MDE-L/O-002	Main Diesel Engine #2	Prelube Discharge Pressure to Gauge	19	1 1/4	OF1-04-04	OF1-04-04
14	2MDE-L/O-003	Main Diesel Engine #2	Prelube Supply Pressure to Gauge	19	1 1/4	OF1-04-04	OF1-04-04
15	2MDE-L/O-004	Main Diesel Engine #2	Lube Oil Suction to Gauge	19	1 1/4	OF1-04-04	OF1-04-04
16	2MDE-L/O-005	Main Diesel Engine #2	Lube Oil Discharge Pressure to Gauge	19	1 1/4	OF1-04-04	OF1-04-04
17	2MDE-LOFT-F-1	Main Diesel Engine #2	Sump Fill (Aft of Generator)	46	3	Flanged	90 ELBOW
18	2MDE-LOFT-F-3	Main Diesel Engine #2	Sump Drain (Aft of Generator)	54	2 1/2	Flanged	90 ELBOW

19	2MDE-LOP-F-1	Main Diesel Engine #2	Lube Oil Recirc from Sump Heater/LOP (Forward of MDE)	23	2 1/2	Flanged	90 ELBOW
20	2MDELOS-F-001	Main Diesel Engine #2	Lube Oil Supply to MDE	87	6	Flanged	90 ELBOW & FLANGED 90 ELBOW
21	2MDELOS-F-002	Main Diesel Engine #2	Lube Oil Pump Discharge to Cooler	83.5	6	Flanged	90 ELBOW & FLANGED 90 ELBOW
22	2MDELOS-F-004	Main Diesel Engine #2	Sump Vent (Aft of Generator)	94.75	6	Flanged	90 ELBOW & FLANGED 90 ELBOW
23	2MDE-WO-6	Main Diesel Engine #2	Sump Drain (Aft of Generator)	24	2	Flanged	90 ELBOW
24	3-FS-F-1	Main Diesel Engine #3	Fuel Oil Supply from Coalescer	30	2	Flanged	90 DEG DOGLEG
25	3-FS-F-2	Main Diesel Engine #3	Fuel Oil Return	27	2	Flanged	90 DEG DOGLEG
26	3-FS-F-3A	Main Diesel Engine #3	Fuel Oil Leakage Return Port	26.5	2	Flanged	Flanged
27	3-FS-F-3B	Main Diesel Engine #3	Fuel Oil Leakage Return Starboard	26	2	Flanged	90 ELBOW
28	3-FS-F-4	Main Diesel Engine #3	Fuel Oil Leak Detection Drain	24	2	Flanged	90 ELBOW
29	3-FS-F-5	Main Diesel Engine #3	Fuel Oil Pressure to Gauge	15	3/8	BSP	Flat Serfas
30	3MDE-BLO-001	Main Diesel Engine #3	Bearing Lube Oil Suction	26.5	1/2	NSML-08	NSML-08
31	3MDE-BLO-002	Main Diesel Engine #3	Bearing Lube Oil Discharge Forward	26.5	1/2	NSML-08	NSML-08
32	3MDE-BLO-003	Main Diesel Engine #3	Bearing Lube Oil Discharge Aft	26.5	1/2	NSML-08	NSML-08
33	3MDE-L/O-002	Main Diesel Engine #3	Prelube Discharge Pressure to Gauge	19.5	1 1/4	OFI-04-04	OFI-04-04
34	3MDE-L/O-004	Main Diesel Engine #3	Lube Oil Suction to Gauge	19	1 1/4	OFI-04-04	OFI-04-04
35	3MDE-L/O-005	Main Diesel Engine #3	Lube Oil Discharge Pressure to Gauge	15	1 1/4	OF1-04-04	OF1-04-04
36	3MDE-L/O-006	Main Diesel Engine #3	Lube Oil to Gauge	15	3/8	JIC	JIC
37	3MDE-LOFT-F-1	Main Diesel Engine #3	Sump Fill (Aft of Generator)	41.25	2 1/2	Flanged	90 ELBOW

38	3MDE-LOFT-F-2	Main Diesel Engine #3	Sump Supply to LOP (Forward of MDE)	32	3	Flanged	90 ELBOW
39	3MDE-LOFT-F-3	Main Diesel Engine #3	Sump Drain (Aft of Generator)	32	3	Flanged	90 ELBOW
40	3MDE-LOP-F-1	Main Diesel Engine #3	Lube Oil Recirc from Sump Heater/LOP (Forward of MDE)	60	2	Flanged	90 ELBOW
41	3MDELOS-F-001	Main Diesel Engine #3	Lube Oil Supply to MDE	71 1/8	6	Flanged	90 DEG LEG ELBOW
42	3MDELOS-F-002	Main Diesel Engine #3	Lube Oil Pump Discharge to Cooler	84	6	Flanged	90 ELBOW & 90 FLANGED ELBOW
43	3MDESH-002	Main Diesel Engine #3	Sump to Sump Heater (Aft of Generator)	31	2	Flanged	90 ELBOW
44	3MDE-WO-6	Main Diesel Engine #3	Sump Drain (Aft of Generator)	26	2	Flanged	90 ELBOW
45	3MDE-WO-7	Main Diesel Engine #3	Sump Drain (Aft of Generator)	27	2	Flanged	90 ELBOW
46	4MDE-BLO-001	Main Diesel Engine #4	Bearing Lube Oil Suction	28	1/2	NM1-08	NM1-08
47	4MDE-BLO-002	Main Diesel Engine #4	Bearing Lube Oil Discharge Forward	27 1/2	1/2	NM1-08	NM1-08
48	4MDE-BLO-003	Main Diesel Engine #4	Bearing Lube Oil Discharge Aft	27 1/2	1/2	NM1-08	NM1-08
49	4MDE-L/O-003	Main Diesel Engine #4	Prelube Supply Pressure to Gauge	18 1/2	1 1/4	OF1-04	OF1-04
50	4MDELOS-F-004	Main Diesel Engine #4	Sump Vent (Aft of Generator)	44 1/2, 43 1/2	6	8 BOLT	8 BOLT
51	PAW-HYD-001	Anchor Windlass #1	Pump Discharge	18, 17 7/8	1 1/2	Flanged	Code 61
52	PAW-HYD-002	Anchor Windlass #1	Pump Discharge	17, 17 1/8	1 1/2	Flanged	JIC 24
53	PAW-HYD-005	Anchor Windlass #1	Return to HOS-V-74	12, 12	1/2	JIC-08	JIC-08
54	PAW-HYD-006	Anchor Windlass #1	HOS-V-74 to Hand Pump	60	1/2	JF1-08	JF1-08
55	PAW-HYD-007	Anchor Windlass #1	Hand Pump Discharge	44	3/8	JF1-06	JF1-06
56	PAW-HYD-008	Anchor Windlass #1	Filter Inlet to Pump	39	1/2	JF1-08	JF1-08

57	PAW-HYD-009	Anchor Windlass #1	Filter Inlet from Pump	46	1 1/2	JIC-24	JIC-24
58	PAW-HYD-010	Anchor Windlass #1	Return to Filter	17, 17	4-Jan	JIC-04	JIC-04
59	PAW-HYD-016	Anchor Windlass #1	Head Tank	18.25	1/2	JF1-08	JF9-08LD
60	PAW-HYD-017	Anchor Windlass #1	Case Drain	12, 12	1/2	JIC-08	JIC-08
61	PAW-HYD-018	Anchor Windlass #1	Case Drain	12, 12	1/2	JIC-08	JIC-08
62	PAW-HYD-020	Anchor Windlass #1	Return to Sump	31	1/2	JF1-08	JF1-08
63	PAW-HYD-001	Anchor Windlass #2	Pump Discharge	16 7/8, 16 3/4	1 1/2	JIC-24	JIC-24
64	PAW-HYD-002	Anchor Windlass #2	Pump Discharge	17, 16 7/8	1 1/2	JIC-24	JIC-24
65	PAW-HYD-005	Anchor Windlass #2	Return to HOS-V-78	11 3/4, 11 7/8	1/2	JIC-08	JIC-08
66	PAW-HYD-006	Anchor Windlass #2	HOS-V-78 to Hand Pump	58 1/2	1/2	JIC-08	JIC-08
67	PAW-HYD-007	Anchor Windlass #2	Hand Pump Discharge	44 1/2	3/8	JF1-06	JF1-06
68	PAW-HYD-008	Anchor Windlass #2	Filter Inlet to Pump	40	1/2	JF1-08	JF1-08
69	PAW-HYD-009	Anchor Windlass #2	Filter Inlet from Pump	47	1 1/2	JIC-24	JIC-24
70	PAW-HYD-010	Anchor Windlass #2	Return to Filter	17, 16 1/2	1 1/2	JIC-24	JIC-24
71	PAW-HYD-016	Anchor Windlass #2	Head Tank	17 1/2	1/2	JF1-08	JF9-08 LD
72	PAW-HYD-017	Anchor Windlass #2	Case Drain	12, 11 7/8	1/2	JIC-08	JIC-08
73	PAW-HYD-018	Anchor Windlass #2	Case Drain	12, 12	1/2	JIC-08	JIC-08
74	PAW-HYD-019	Anchor Windlass #2	Case Drain	23	1/4	JF1-04	JF1-04
75	PAW-HYD-020	Anchor Windlass #2	Return to Sump	30	1/2	JF1-08	JF1-08
76	PAW-HYD-021	Anchor Windlass #2	Unknown Purpose	20 1/2	1/4	JF1-04	JF9-04

WORK ITEM 27: Fuel Oil Purifier (FOP) Overhaul

1. SCOPE

1.1 Intent. This work item describes the requirements for the Contractor to perform an annual service on two Alfa Laval FOPX-609 Fuel Oil Purifiers onboard the United States Coast Guard Cutter HEALY (WAGB-20).

1.2 Government-furnished property.

None.

2. REFERENCES

COAST GUARD DRAWINGS

Coast Guard Drawing 420-WAGB_541_4, Rev D, Diagram Fuel Fill, Transfer & Purification System

Coast Guard Drawing 420-WAGB_593_4, Rev. B, Diagram Oily Water Oil, and Waste Water Collecting Systems

COAST GUARD PUBLICATIONS

Coast Guard Technical Publication (TP) 5061, Nov 2003, S9261-BE-MMC-010 - Purification System, Fuel Oil

Coast Guard Technical Publication (TP) 5391, Apr 2020, Controllers, Centrifugal Separator System – EPC60 Retrofit

Surface Forces Logistics Center Standard Specification 0000 (SFLC Std Spec 0000), 2022, General Requirements

Surface Forces Logistics Center Standard Specification 6310 (SFLC Std Spec 6310), 2022, Requirements for Preservation of Ship Structures

OTHER REFERENCES

None.

3. REQUIREMENTS

3.1 General. Work on the #1 FOP must be completed within the first 75% of the allotted contract period of performance. This is to allow the use of the #1 FOP in preparation for dock trials.

3.1.1 CIR.

None.

3.1.2 Tech Rep. The Contractor must provide the services of certified Alfa Laval Tech Rep to accomplish the following tasks on site:

- Provide manufacturer's proprietary information, software, and tools pertinent to the equipment/system.
- Assist with proper repair methods and ensure compliance with manufacturer's procedures and standards during disassembly, inspection, repair, modification, calibration, and reassembly of the equipment/system.

3.1.2.1 The FOP Technical Representative must be present for all critical phases of the work such as disassembly and reassembly stages for removal, inspection, renewing or repairing, installing, testing and calibrating each FOP's components.

3.1.2.2 The Tech Rep must be underway for sea trials.

3.1.3 Protective measures. The Contractor must furnish and install all protective measures in accordance with SFLC Std Spec 0000, paragraph 3.3.3 (Vessel component, space, and equipment protection).

3.1.4 Interferences. The Contractor must handle all interferences in accordance with SFLC Std Spec 0000, paragraph 3.3.5 (Interferences).

3.1.5 Fuel Oil Purifier Model and Serial numbers are as follows:

TABLE – MODEL AND SERIAL NUMBERS

LOCATION	MANUFACTURER	MODEL NUMBER	SERIAL NUMBER
AMR 1	Alfa Laval	FOPX 609 TFD 24 60	4 077 549/ 1994
AMR 4	Alfa Laval	FOPX 609 TFD 24 60	4 077 550/ 1994

3.2 Pre-Overhaul Operational Testing.

3.2.1 Operational test - initial. Prior to commencement of work, the Contractor must witness Coast Guard personnel perform an initial operational test of all items or shipboard devices to be disturbed, used, repaired, or altered, to demonstrate existing operational condition. Submit a CFR.

3.2.2 To determine the correct operation of the fuel oil purification system (which the purifier is part of), an operational test and inspection of ancillary components is required.

3.2.3 The Contractor and Coast Guard Inspector must operationally test the two purifiers and the system they are part of, to ensure proper operation and to discover any additional maintenance needs. Equipment must only be operated in the presence of Coast Guard Inspector. The Contractor is solely responsible for inspection of components; Coast Guard Inspector will assist as required.

3.2.4 As a minimum the proper operation/function of the following ancillary FOP components must be ascertained during operational testing:

- Set Control Unit with parameters that enable the system to operate correctly. Document, via CFR, these settings as compared with those listed in 6.1.2 of CG Tech Pub 5061. If any settings deviate from the factory set values, document the reason for the change.
- Water Supply System
- Operating Water Tanks
- Solenoid Valve Blocks
- Transducers
- Float Switches
- Pressure Switches
- Regulating Valves
- Needle Valves
- Pneumatic System
- Actuators
- 3-Way Valves
- Solenoid Valve Blocks
- Pump Switches
- Electrical System
- Switches
- Solenoids
- Indicators
- Heaters
- Starters

3.2.5 The Contractor must document in the form of a CFR any discovered deficiencies and their recommended repairs. Performance of actual repairs may be the subject to a contract change.

CAUTION!

The operation of a centrifuge, due to its heavy construction and high speed, produces great kinetic energy. Therefore, incorrect operation, maintenance, assembly, and parts renewal can result in injury to personnel and damage to machine and plant. The contractor must follow the manufacturer safety precautions in accordance with CG Tech Pub.

3.3 Material. The Contractor must provide the following service kits to perform the annual service:

TABLE – SERVICE KITS

KIT DESCRIPTION	PART NUMBER	QUANTITY
FOPX 609 Int. Service Kit	54704401	2
FOPX 609 Major Service Kit	54873501	2

3.3.1 The Contractor must also supply new gaskets for the external hose connections which are disassembled when the purifier is overhauled. Provide three (3) gaskets, Part No. 546229-02 for each purifier being overhauled.

3.3.2 The Contractor must supply all necessary lubricants to overhaul, reassemble, and restore the units to operation in accordance with the approve lubricants listed in CG Tech Pub 5061.

3.3.3 The Contractor must supply and install twelve (12) new dome washers, Part No. 22405 for each purifier being overhauled.

3.4 Fuel Oil Purifier (FOP) Overhaul. The Contractor must perform the standard 8000-hour, annual (also referred to as MS-Major Service) separator maintenance in accordance with CG Tech Pub 5061.

NOTE

To ensure there is no confusion in understanding the scope of this item or in submitting a bid, by definition when performing the 8000 hour maintenance all the lesser 1000 hour and 2000 hour maintenance actions must also be performed (i.e. the 8000 hr maintenance includes all maintenance items marked as 8000 hr, 2000 hr, and 1000 hr).

3.4.1 The Contractor must clean all bowl disks and other parts in contact with process liquid in accordance with CG Tech Pub 5061.

NOTE

The contractor should note guidance in the technical manual on page 271 of the Operator's Service Manual section concerning use of solvents for cleaning equipment.

3.4.1.1 If additional cleaning is required, the Contractor must use ultrasonic cleaning methods. Ultrasonic cleaning is allowed, but do not agitate any part in an ultrasonic bath for longer than 5 minutes at a time. (See CG Tech Pub 5068, Caution Note 35.)

3.4.2 Inspect all purifier parts that become accessible during the overhaul for corrosion, erosion, and any other defects.

3.4.3 Disassemble, inspect and test the heater in accordance with CG Tech Pub 5068.

3.4.4 The Contractor must **not** include cleaning of the purifier sludge tanks as a part of this work item.

NOTE

The fuel oil purifiers and lube oil purifiers are mounted together, one fuel oil purifier and one lube oil purifier per purifier skid. Each of the two purifier skids has one (1) sludge tank associated with the skid. Both the fuel oil purifier for that skid and the lube oil purifier for that skid empty into the common sludge tank.

#1 LOP and #1 FOP share sludge tank 4-68-1-F.

#2 LOP and #2 FOP share sludge tank 4-96-1-F.

3.4.5 The Contractor must submit a condition found report to the Coast Guard Inspector identifying any discrepancies found during the service and make recommendations for repair within 24 hours of disassembly (or discovery of discrepancy). Renewal of any parts (damaged, worn, or otherwise not suitable for continued use) that are not included in the service kits (paragraph 3.3) may be the subject of a contract change.

3.4.6 The Contractor must restore all work areas to a clean condition, disposing of all removed material in accordance with all applicable local, state, and federal requirements.

3.4.7 Following maintenance, all systems and equipment affected must be restored to, as a minimum, its previous operational condition, including items stored for re-use. For all equipment or systems under contractor control during performance of this item, contractor must be responsible for protecting open equipment/systems, renewing losses and repairing damage.

3.4.8 The Contractor must turn over all spare parts associated with the service kits to the Coast Guard Inspector upon the completion of the work.

NOTE
Coast Guard personnel will operate all shipboard machinery and equipment.

3.5 Operational test – post repairs. After completion of work, the Contractor must witness an operational test. Verify proper operation of the components or systems affected by this work. During this testing, run the equipment through its full range of capabilities in all configurations and operating modes. The serviced system must be tested to ensure all work was done properly. System testing must continue until the system is satisfactorily operating as designed. Operationally test each purifier for a minimum period of 48 hrs. prior to evaluating test data and determining overhaul success.

3.6 Touch-up Preservation. The Contractor must prepare, and touch-up coat all disturbed surfaces to match existing adjacent surfaces in accordance with SFLC Std Spec 6310, Appendix B (Cutter and Boat Interior Painting Systems).

4. NOTES

This section is not applicable to this work item.

9.3.2 Separator maintenance schedule

	ACTION	INTERVALS BETWEEN MAINTENANCE				More infor infor-ma-tion
		1000h or monthly	2000h or 3 months (IS)	8000h 1 year (MS)	4 years	
1 SEPARATOR BOWL						
Dismantling, cleaning and inspection of:						
a.	inlet, outlet and frame hood		X	X	X	
b.	bowl discs and other parts in contact with process liquid		X	X	X	
c.	discharge mechanism		X	X	X	
Checking of:						
d.	threads of inlet pipe and oil paring disc		X	X	X	
e.	top surface of level ring		X	X	X	
f.	sliding bowl bottom		X	X	X	
g.	discharge mechanism		X	X	X	
h.	guiding surfaces		X	X	X	
i.	Priming of guiding surfaces			X	X	
j.	repair of galling on guiding surfaces	whenever necessary				
k.	bowl spindle cone and bowl body nave			X	X	
l.	bowl hood seal ring		X	X	X	
m.	large lock ring joint			X	X	
n.	priming of large lock ring joint			X	X	
o.	disc stack pressure			X	X	
p.	hight position of oil paring disc			X	X	
q.	corrosion and erosion	whenever the separator is dismantled				
r.	Exchange of parts marked (IS)	X	X	X		
s.	Exchange of parts marked (MS)			X	X	
2. PARING DISC DEVICE FOR OPERATING WATER						
a.	Dismanting, cleaning and inspection		X	X	X	
b.	Exchange of seal ring and gasket		X	X		
Checking of:						
c.	height position of control paring disc			X	X	
3. BOWL SPINDLE						
a.	Dismantling, cleaning and inspection			X	X	
Checking of:						
a.	wear of driver and of groove in worm			X	X	
b.	top bearing springs			X	X	
c.	ball bearing housing indentations			X	X	
d.	height position of bowl spindle			X	X	
e.	bowl spindle radial wobble			X	X	
f.	Exchange of parts marked (MS)			X		
g.	Replacement, if necessary, of: bowl spindle, worm, ball bearing housing, spring casing and bottom bearing housing/bottom sleeve				X	

SEPARATOR INSTRUCTION

ACTION		INTERVALS BETWEEN MAINTENANCE				More information
		1000h or monthly	2000h or 3 months (IS)	8000h 1 year (MS)	4 years	
4. WORM-WHEEL SHAFT/COUPLING						
a.	Dismantling, cleaning and inspection			X	X	
b.	Replacing of friction pads	whenever necessary				
Checking of:						
c.	worm wheel shaft			X	X	
d.	worm wheel and worm	X	X	X	X	
e.	axial play of elastic plate			X	X	
f.	Exchange of parts marked (MS)			X	X	
g.	Worm wheel, replacement if necessary	X				
5. BRAKE						
a.	Exchange of brake lining			X	X	
b.	Checking of spring and brake shoe			X	X	
6. OIL CHANGE IN WORM GEAR HOUSING*						
a.	Oil change	X**	X**	X**	X**	
Checking of:						
b.	worm and worm wheel, see above					
7. SIGHT GLASS						
a.	Exchange of sealing rings		X	X	X	
b.	Exchange of glass tube				X	
c.	Exchange of scraper	whenever necessary				
8. FRAME FEET						
a.	Exchange of rubber cushions			x		
9. ELECTRIC MOTOR						
a.	Lubrication	See Manufacturer's instruction				–

* When the separator is running for short periods, lubricating oil must be changed every 12 months even if the total number of operating hours is less than 1000 (2000).

** When using a group D oil, time of operation between oil changes can be extended from the normal 1000 h to 2000 hours.
Top up when necessary.

NOTE!

In a new installation, or after replacement of gear, change the oil after 200 operating hours.

WORK ITEM 28: Lube Oil Purifier (LOP) Overhaul

1. SCOPE

1.1 Intent. This work item describes the requirements for the Contractor to perform an annual service on two Alfa Laval LOPX-710 Lube Oil Purifiers onboard the United States Coast Guard Cutter HEALY (WAGB-20).

1.2 Government-furnished property.

None.

2. REFERENCES

COAST GUARD DRAWINGS

Coast Guard Drawing 420-WAGB_264_1, Rev. F, Lube Oil Fill Transfer & Purification System

Coast Guard Drawing 420-WAGB_593_4, Rev. B, Diagram Oily Water Oil, and Waste Water Collecting Systems

COAST GUARD PUBLICATIONS

Coast Guard Technical Publication (TP) 5068, 01-NOV-03, S9264-A9-MMC-010 - Purification System, Lube Oil

Coast Guard Technical Publication (TP) 5391, Apr 2020, Controllers, Centrifugal Separator System – EPC60 Retrofit

Surface Forces Logistics Center Standard Specification 0000 (SFLC Std Spec 0000), 2022, General Requirements

Surface Forces Logistics Center Standard Specification 6310 (SFLC Std Spec 6310), 2022, Requirements for Preservation of Ship Structures

OTHER REFERENCES

None

3. REQUIREMENTS

3.1 General. Work on the #1 LOP must be completed within the first 75% of the allotted contract period of performance. This is to allow the use of the #1 LOP in preparation for dock trials.

3.1.1 CIR.

None.

3.1.2 Tech Rep. The Contractor must provide the services of certified Alfa Laval Tech Rep to accomplish the following tasks on site:

- Provide manufacturer's proprietary information, software, and tools pertinent to the equipment/system.
- Assist with proper repair methods and ensure compliance with manufacturer's procedures and standards during disassembly, inspection, repair, modification, calibration, and reassembly of the equipment/system.

3.1.2.1 The LOP Technical Representative must be present for all critical phases of the work such as disassembly and reassembly stages for removal, inspection, renewing or repairing, installing, testing, and calibrating each LOP's components.

3.1.2.2 The Tech Rep must be underway for sea trials.

3.1.3 Protective measures. The Contractor must furnish and install all protective measures in accordance with SFLC Std Spec 0000, paragraph 3.3.3 (Vessel component, space, and equipment protection).

3.1.4 Interferences. The Contractor must handle all interferences in accordance with SFLC Std Spec 0000, paragraph 3.3.5 (Interferences).

3.1.5 Lube Oil Purifier Model and Serial numbers are as follows:

TABLE 1 - MODEL AND SERIAL NUMBERS

LOCATION	MANUFACTURER	MODEL NUMBER	SERIAL NUMBER
AMR 1	Alfa Laval	LOPX 710 SFD 34 60	4 077 646/ 1994
AMR 4	Alfa Laval	LOPX 710 SFD 34 60	4 077 647/ 1994

3.2 Pre-Overhaul Operational Testing

3.2.1 Operational test - initial. Prior to commencement of work, the Contractor must witness Coast Guard personnel perform an initial operational test of all items or shipboard devices to be disturbed, used, repaired, or altered, to demonstrate existing operational condition. Submit a CFR.

3.2.2 To determine the correct operation of the lube oil purification system (which the purifier is part of), an operational test and inspection of ancillary components is required.

3.2.3 The Contractor and Coast Guard Inspector must operationally test the two purifiers and the system they are part of, to ensure proper operation and to discover any additional maintenance needs. Equipment must only be operated in the presence of Coast Guard Inspector. Contractor is solely responsible for inspection of components; Coast Guard Inspector will assist as required.

3.2.4 As a minimum the proper operation/function of the following ancillary LOP components must be ascertained during operational testing:

- Control units
- Set Control Unit with parameters that enable the system to operate correctly. Document, via

CFR, these settings as compared with those listed in 7.2.2 of CG Techpub 5068. If any settings deviate from the factory set values, document the reason for the change.

- Water Supply System
- Operating Water Tanks
- Solenoid Valve Blocks
- Transducers
- Float Switches
- Pressure Switches
- Regulating Valves
- Needle Valves
- Pneumatic System
- Actuators
- 3-Way Valves
- Solenoid Valve Blocks
- Pump Switches
- Sludge Tank and Tank TLI
- Electrical System
- Switches
- Solenoids
- Indicators
- Heaters
- Starters

3.2.5 The Contractor must document in the form of a CFR any discovered deficiencies and their recommended repairs. Performance of actual repairs may be the subject to a contract change.

CAUTION!

The operation of a centrifuge, due to its heavy construction and high speed, produces great kinetic energy. Therefore, incorrect operation, maintenance, assembly, and parts renewal can result in injury to personnel and damage to machine and plant. The contractor must follow the manufacturer safety precautions in accordance with CG Tech Pub.

3.3 Material. The Contractor must provide the following service kits to perform the annual service:

TABLE 2 - SERVICE KITS

KIT DESCRIPTION	PART NUMBER	QUANTITY
LOPX 710 Int. Service Kit	54814901	2
LOPX 710 Major Service Kit	54815301	2

3.3.1 The Contractor must also supply new gaskets for the external hose connections which are disassembled when the purifier is overhauled. Provide three (3) gaskets, Part No. 546229-02 for each purifier being overhauled.

3.3.2 The Contractor must supply all necessary lubricants to overhaul, reassemble, and restore the units to operation in accordance with the approve lubricants listed in CG Tech Pub 5068.

3.3.3 The Contractor must supply and install twelve (12) new dome washers, Part No. 22405 for each purifier being overhauled.

3.4 Lube Oil Purifier (LOP) Overhaul. The following steps apply to the #1 and #2 Lube Oil Purifier. The Contractor must perform the standard 8000-hour, annual (also referred to as MS-Major Service) separator maintenance on both purifiers in accordance with CG Tech Pub 5068. Pages 11 and 12 from CG Tech Pub 5068 tabulate what constitutes the 8000-hour maintenance and have been included at the end of the specification.

NOTE

To ensure there is no confusion in understanding the scope of this item or in submitting a bid, when performing the 8000-hour maintenance all the lesser 1000 hour and 2000-hour maintenance actions must also be performed (i.e. the 8000 hr maintenance includes all maintenance items marked as 8000 hr, 2000 hr, and 1000 hr).

3.4.1 The Contractor must clean all bowl disks and other parts in contact with process liquid in accordance with CG Tech Pub 5068.

NOTE

The contractor should note guidance in the technical manual on page 271 of the Operator's Service Manual section concerning use of solvents for cleaning equipment.

3.4.1.1 If additional cleaning is required, the Contractor must use ultrasonic cleaning methods. Ultrasonic cleaning is allowed, but do not agitate any part in an ultrasonic bath for longer than 5 minutes at a time. (See CG Tech Pub 5068, Caution Note 35.)

3.4.2 Inspect all purifier parts that become accessible during the overhaul for corrosion, erosion, and any other defects.

3.4.3 Disassemble, inspect and test the heater in accordance with CG Tech Pub 5068.

3.4.4 The Contractor must submit a CFR to the Coast Guard Inspector identifying any discrepancies found during the service and make recommendations for repair within 24 hours of disassembly (or discovery of discrepancy). Renewal of any parts (damaged, worn, or otherwise not suitable for continued use) that are not included in the service kits (Paragraph 3.3) may be the subject of a contract change.

3.4.5 Following maintenance, all systems and equipment affected must be restored to, as a minimum, its previous operational condition, including items stored for re-use. For all equipment or systems under contractor control during performance of this item, contractor must be responsible for protecting open equipment/systems, renewing losses, and repairing damage.

3.4.6 The Contractor must turn over all spare parts associated with the service kits to the Coast Guard Inspector upon the completion of the work.

3.5 Sludge Tank Clean and Inspect. The contractor must clean and inspect both sludge tanks. Refer to Coast Guard Drawing 420-WAGB_264_1 & 420-WAGB_593_4.

NOTE

The fuel oil purifiers and lube oil purifiers are mounted together, one fuel oil purifier and one lube oil purifier per purifier skid. Each of the two purifier skids has one (1) sludge tank associated with the skid. Both the fuel oil purifier for that skid and the lube oil purifier for that skid empty into the common sludge tank.

#1 LOP and #1 FOP share sludge tank 4-68-1-F (850 gallons).

#2 LOP and #2 FOP share sludge tank 4-96-1-F (850 gallons).

3.5.1 The Contractor must dispose of residual tank contents and any cleaning fluids in compliance with all applicable Federal, state, and local laws, ordinances, and regulations.

3.5.2 The Contractor must clean all tank interior surfaces free of all foreign materials, such as residual fuel or water, sediment, sludge, rust, or biological growth, taking care not to damage the coating system (if applicable).

3.5.3 The Contractor must accomplish all requirements of SFLC Std Spec 6310, 3.1.6.4 (Surface contaminant removal) to achieve the cleanliness requirements of SSPC-SP 1, including a low-pressure (maximum 5,000 psi) freshwater wash down of the surfaces.

3.5.4 Remove cleaning media and residues continuously from the tank during the washing process. Remove any residual wash media and wipe up residual moisture with clean lint-free cloths. Wipe the interior tank structure dry and free of all cleaning agents.

3.5.5 The Contractor must visually inspect all tank interior surfaces, including, but not limited to bulkheads, floor and overhead plating, structural members, manhole cover surfaces, fasteners, and gasket seating surfaces. Submit a CFR including the following, as applicable:

- Tank structural condition.
- Manhole and cover condition.
- Ladder condition (if applicable).
- Condition of tank coating (if applicable), including dimensions taken, percentage, location, and type of coating failure.
- Vent tube condition.
- Suction and discharge piping condition.
- Fastener material and condition.
- Steam Coil condition.

3.5.6 The Contractor must ensure that the tank(s) remain open for at least 24 hours after completion of any authorized repair and preservation procedures. Notify the COR at least 48 hours prior to closing the tank(s).

3.5.6.1 After satisfactory inspection by the Coast Guard Inspector and completion of all authorized repairs, remove all installed temporary plugs prior to tank closing.

3.5.6.2 Close tank manhole cover(s) with new gasket material conforming to AMS C-6183B. Chase threads on studs to ensure even installation of the access covers. Renew all stud cotton grommets (as applicable) upon reinstallation of manhole cover(s).

NOTE
Coast Guard personnel will operate all shipboard machinery and equipment.

3.6 Operational test – post repairs. After completion of work, the Contractor must witness an operational test. Verify proper operation of the components or systems affected by this work. During this testing, run the equipment through its full range of capabilities in all configurations and operating modes. The serviced system must be tested to ensure all work was done properly. System testing must continue until the system is satisfactorily operating as designed. Operationally test each purifier for a minimum period of 48 hrs. prior to evaluating test data and determining overhaul success.

3.7 Touch-up Preservation. The Contractor must prepare, and touch-up coat all disturbed surfaces to match existing adjacent surfaces in accordance with SFLC Std Spec 6310, Appendix B (Cutter and Boat Interior Painting Systems).

4. NOTES

4.1 Maintenance Schedule.

3.1 MAINTENANCE SCHEDULE

Part	Action	Maximum intervals				More information	
		1000 h	2000 h or 3 month	8000 h or 1 year	Every 4 years		
Anm: Corrosion and erosion - To be checked every time the separator is dismantled. See 5.1.							
EPC control unit	Alarm test	X				7.4	
Oil sump	Oil change [1]	X	[2]			4.7	
Inlet/outlet	Cleaning and inspection		X			4.3.6	
Bowl body	Cleaning and inspection		X			4.3.4	
O-rings, seal rings	Inspection/exchange		X				
Guiding surfaces	Cleaning and inspection		X			5.4	
Frame hood	Cleaning and inspection		X			4.3.5	
Threads of inlet pipe and oil paring disc	Inspection		X			5.9	
Discs	Cleaning and inspection		X			4.3.5	
Disc stack pressure	Checking		X			5.17	
Lock ring and bowl body threads	Cleaning and inspection		X			5.8	
Sliding bowl bottom	Cleaning and inspection		X			4.3.5	
Discharge mechanism	Cleaning and inspection		X			4.3.4, 5.6	
Valve plugs	Cleaning and inspection		X			5.6.4	
Springs	Inspection		X			5.6.2	
Nozzles	Cleaning and inspection		X			4.3.4, 5.6	
Spindle top	Cleaning and inspection		X			5.5	

[1] **NOTE!** In a new installation or after replacement of gear, change the oil after 200 operating hours.

[2] If a Group D gear oil is used (see 3.3), oil change interval can be increased to 2000 hours.

Always remedy faults immediately

MAINTENANCE, SCHEDULE

Part	Action	Maximum intervals				More information
		Monthly	2000 h or 3 months	8000 h or 1 year	Every 4 years	
Bowl body nave	Inspection and cleaning		X			5.5
Worm gear	Inspection		X			5.3, 5.13
Height position of oil paring disc	Checking and adjustment			X		5.18
Height position of control paring disc	Checking and adjustment			X		5.15
Height position of spindle	Checking and adjustment			X		5.14
Bowl spindle	Inspection and cleaning			X		5.5, 4.3.2
Bowl spindle radial wobble	Checking			X		5.11
Frame top and bottom part	Inspection and cleaning			X		
Worm wheel shaft	Inspection and cleaning			X		4.3.1
Friction coupling	Inspection and cleaning			X		4.3.1
Brake	Inspection and cleaning			X		4.5
Bearings	Exchange			X		
Ball bearing housings	Inspection			X		
Frame feet	Exchange				X	4.6
Solenoid valve block, water	Cleaning		X			6.5
Flow switch, type FS	Cleaning			X		6.3
Preheater	See separate instruction book					
Electric motor	See manufacturer's instructions					

Always remedy faults immediately

WORK ITEM 29: Relocate Cycloconverter Strainers (SLEP)

1. SCOPE

1.1 Intent. This work item describes the requirements for the Contractor to remove the existing four Main Seawater (MSW) Y-Strainers serving the Cycloconverters and install four duplex strainers. Three of the four 2" Y-strainers are contained within the Cycloconverters Room (2-102-0-E) and the fourth 2" Y-Strainer is on the OVHD of the Upper-Level Motor Room (4-102-0-E). Two 2" duplex strainers, a 2" deck drain, and components will be installed just aft of the Cycloconverter room in the Science Cargo Hold No. 2 (2-117-0-AA). Two more 2" duplex strainers will be installed in the Upper-Level Motor Room (4-102-0-E) at approximately frame 105.

1.2 Government-furnished property.

MTI	ITEM DESCRIPTION	NSN/PN	QTY	ESTIMATED COST ($/UNIT)
N	2" Type A Deck Drain, Bronze with Carbon Steel Ring Cast Drain - Drawing 810-1385789 Rev. F	D307A205	1	$1,300.00

2. REFERENCES

COAST GUARD DRAWINGS

Coast Guard Drawing 420-WAGB_256_1, Rev J, Diagram Main Seawater Circulating System

Coast Guard Drawing 420-WAGB_256_10, Rev -. SLEP Cycloconverter MSW Strainer Relocation

Coast Guard Drawing 420-WAGB_505_1, Rev D, Piping General Notes and Installation Details

Coast Guard Drawing 420-WAGB_508_1, Rev F. PP & Mchry Insulation Sched

Coast Guard Drawing 420-WAGB_508_2, Rev D. Piping & Machinery Insulation Schedule L/M

Coast Guard Drawing 420-WAGB_505_74, Rev D. Piping Arrangement Unit 106

Coast Guard Drawing 420-WAGB_505_76, Rev J. Piping Arrangement Unit 107

Coast Guard Drawing 420-WAGB_505_80, Rev K, Piping Arrangement Unit 126

Coast Guard Drawing 420-WAGB_528_1, Rev G, Diagram of Plumbing & Int Deck Drain and Vacuum Collection System

Coast Guard Drawing 420-WAGB_635_1, Rev D, Insulation Layouts & Dets

Coast Guard Drawing 420-WAGB_801_1, Rev K, Booklet of General Drawings

COAST GUARD PUBLICATIONS

Commandant Instruction Manual COMDTINST M10360.3D, January 2014, Coatings and Colors Manual

Surface Forces Logistics Center Standard Specification 0000 (SFLC Std Spec 0000), 2022, General Requirements

Surface Forces Logistics Center Standard Specification 0740, (SFLC Std Spec 0740) 2022 Edition, Welding and Allied Processes

Surface Forces Logistics Center Standard Specification 5000 (SFLC Std Spec 5000), 2022, Auxiliary Machine Systems

Surface Forces Logistics Center Standard Specification 6310 (SFLC Std Spec 6310), 2022, Requirements for Preservation of Ship Structures

OTHER REFERENCES

ASTM International (ASTM) F708, 2022, Standard Practice for Design and Installation of Rigid Pipe Hangers

Code of Federal Regulations (CFR) Title 29, Part 1915, Subpart E, Sep 2015, Scaffolds, Ladders and Other Working Surfaces

NAVSEA Drawing 803-1385789, Rev G, Fittings, Deck Drains

NAVSEA Drawing 803-1385866, Rev E, Penetration, Bulkhead and Deck

3. REQUIREMENTS

3.1 General.

3.1.1 CIR.

None.

3.1.2 Tech Rep.

Not applicable.

3.1.3 Protective measures. The Contractor must furnish and install all protective measures in accordance with SFLC Std Spec 0000, paragraph 3.3.3 (Vessel component, space, and equipment protection).

3.1.4 Interferences. The Contractor must handle all interferences in accordance with SFLC Std Spec 0000, (Interferences). Known interferences include, but are not limited to the following:

- Insulation
- Piping
- Cables
- Machinery

NOTE

Coast Guard personnel will operate all shipboard machinery and equipment.

3.1.5 Operational Test – Initial. Prior to commencement of work, the Contractor must witness Coast Guard personnel perform an initial operational test of the equipment listed below to demonstrate existing operational condition. Submit a CFR.

- Deck drains
- MSW System to Cycloconverters

3.1.6 Welding and brazing. The Contractor must perform all welding, brazing, and non-destructive testing (NDT) in accordance with SFLC Std Spec 0740, Welding and Allied Processes. All welds on water tight bulkheads and decks must be examined by PT or MT in addition to a visual inspection.

3.1.7 Fluid disposal. The Contractor must drain all residual water from the affected piping; dispose of removed fluids in accordance with all applicable Federal, state, and local regulations. In the process of removal of system piping, the Contractor must not dispose of any fluid in onboard tanks or bilges.

3.1.8 Material disposal. The Contractor must dispose of any component not being reused in accordance with all applicable Federal, state, and local regulations.

3.1.9 Scaffolding or staging. The Contractor must provide and erect suitable staging or scaffolding, as required, to facilitate work in accordance with CFR Title 29, Part 1915, Subpart E.

3.1.10 Work coordination. The Contractor must coordinate this work in conjunction with the following:

- MDG-ASW-ADG Seawater Piping, Modify
- Science Seawater Strainer, Install

3.2 Removals. The Contractor must perform the rip-out of the Cycloconverter MSW piping and components in accordance with CG Drawing 420-WAGB_256_1. Any pipe supports/brackets not being reused in the installation must be removed, surfaces ground smooth and receive a touch up coating in accordance with SFLC Std Spec 6310 3.1.13. Any components retained for reinstallation must be cleaned, inspected and tagged for the proper reinstallation.

3.2.1 Immediately after disconnecting or removing piping, the Contractor must completely seal all openings to the rest of the system using threaded caps, threaded plugs, or bolt-on blanks made of durable plastic or sheet-metal that is no less than 1/16-inch thick.

3.3 Installations. The Contractor must provide all material outside provided GFE, paragraph 1.2, and install the following in accordance with CG Drawing 420-WAGB_256_1.

NOTE

Shipboard personnel will mark up CCOL and apply Material Condition plates for new deck drain.

3.3.1 Deck drain. The Contractor must install new deck drain and associated piping in accordance with NAVSEA Drawing 803-1385789. Procure and install a deck drain wrench for the new drain and fabricate/install a bracket for the wrench near the drain.

3.3.2 Strainer foundation and coaming. The Contractor must install new foundations and coaming around the strainer assemblies.

3.3.3 Strainers. The Contractor must install the new duplex strainers, in accordance with manufacturer's instructions.

3.3.4 MSW piping. The Contractor must provide and install all piping and piping components to the new duplex strainers.

3.3.4.1 All hangers and supports must be installed in accordance with ASTM F708 with lined synthetic rubber and spacing must be no greater than 6 feet.

3.3.4.2 All piping penetrations through decks and bulkheads must be performed in accordance with CG Drawing 420-WAGB_505_1.

3.3.4.3 All new and disturbed piping must be flushed with fresh water until all debris is removed but no less than five minutes. Ensure flushing fluid is directed to move scale and foreign debris away from installed machinery to prevent possible damage upon operational testing.

3.3.5 Differential pressure gauges. Install differential pressure gauges and gauge panel foundations in accordance with CG Drawing 420-WAGB_256_1. New gauges must be calibrated in accordance with SFLC Std Spec 5000 Appendix C2.5.2.

3.4 Hydrostatic testing. The Contractor must, in the presence of the CG Inspector, hydrostatically test all new/modified and disturbed piping in accordance with SFLC Std Spec 0740 Appendix C2.2.5. Hydrostatic test pressures are found in CG Drawings 420-WAGB_256_9 and 420-WAGB_524_7. Repair all test deficiencies and retest as applicable. Submit CFR.

3.5 Boundary testing. The Contractor must conduct a boundary test, in the presence of a CG Inspector, of all new bulkhead penetrations in accordance with SFLC Std Spec 0740 Appendix C2.2.3. Submit CFR.

3.6 Insulation. The Contractor must insulate all new piping and any pipe/bulkhead/overhead insulation disturbed or damaged during this work item in accordance with CG Drawings 420-WAGB_635_1, 420-WAGB_508_1 and 420-WAGB_508_2. Do not insulate piping until the hydrostatic testing is complete.

3.7 Labels/tags. The Contractor must fabricate and install new valve label plates in accordance with CG Drawing 420-WAGB_507_1. Label plate text must be black on silver background. Format text in accordance with CG Drawing 420-WAGB_507_1. Each tag must be labeled as follows.

- MSW-V-250 * CYCLO CLR "1A" STRNR SUPPLY
- MSW-V-251 * CYCLO CLR "1A" STRNR RETURN
- MSW-V-252 * CYCLO CLR "1B" STRNR SUPPLY
- MSW-V-253 * CYCLO CLR "1B" STRNR RETURN
- MSW-V-254 * CYCLO CLR "2A" STRNR SUPPLY
- MSW-V-255 * CYCLO CLR "2A" STRNR RETURN
- MSW-V-256 * CYCLO CLR "2B" STRNR SUPPLY
- MSW-V-257 * CYCLO CLR "2B" STRNR RETURN

NOTE

Coast Guard personnel will operate all shipboard machinery and equipment.

3.7.1 Paint the new valve handwheels in accordance with SFLC Std Spec 6310 and CG Colors and Coatings Manual M10360.3D.

3.8 Operational test, post repairs. After completion of work, the Contractor must thoroughly test, in the presence of the Coast Guard Inspector, and demonstrate all items or shipboard devices that have been disturbed, used, repaired, altered, or installed to be in satisfactory operating condition. Record all available gauge readings. Submit CFR.

3.9 Touch-up preservation. The Contractor must prepare and coat all new and disturbed surfaces to match existing adjacent surfaces in accordance with SFLC Std Spec 6310, paragraph 3.1.13 (Touch-ups and minor coating repairs).

3.10 Redlined Drawing Deliverables. The Contractor must “red-line” applicable Coast Guard drawing(s) referenced above to reflect the work or deviations specified in this work item in accordance SFLC Std Spec 0850. Submit a CFR.

4. NOTES

This section is not applicable to this work item.

WORK ITEM 30: Recapitalize MSW & ASW Valves (SLEP)

1. SCOPE

1.1 Intent. This Work describes the requirements for the Contractor to complete Auxiliary Seawater (ASW), Auxiliary Diesel Generator Seawater (ADGSW), and Main Seawater (MSW) piping system upgrades to USCGC HEALY by performing the following modifications to the ASW system: one (1) new automatic balancing valve to the Trawl Core Winch drive cabinet, two (2) new automatic balancing valves to the Oceanographic Winch drive cabinets, six (6) new 3-way diverting control valves serving chiller plants & three (3) new 3-way diverting control valves serving reefer plants, with all associated piping modifications. The Contractor must complete the following modifications to the ADGSW system: one (1) new balancing orifice plate serving the Auxiliary Diesel Generator (ADG), one (1) new vacuum breaker/air purge valve serving the ADG, with all associated piping modifications. In addition, the following mods to the MSW system: four (4) new balancing orifice plates serving the Central Freshwater (CFW) Coolers and associated piping modifications.

1.2 Government-furnished property.

MTI	ITEM DESCRIPTION	NSN/PN	QTY	ESTIMATED COST ($/UNIT)
N	VALVE, VACUUM BREAKER, 3" NPS 125# ANSI B16.6 FLANGE CONNECTION, GLOBE STYLE HIGH FLOW TYPE, 80 SCFM PER SECOND, WITH AIR RELEASE VALVE, 260 SCFM NOMINAL, ASTM A536 DUCTILE IRON BODY WITH FUSION BONDED EPOXY COATING, SILICON BRAZE INTERNALS	18U03-4FO-DBY	2	$7,967.00
N	"3-way" for A/C's. METREXMISC EAMDF3120BMF3WTA420 3" 3-WAY MARINE ELECTRIC ACTUATED	EAMDF3120BMF3WTA420	8	$32,798.00
N	"3-way" for Reefers. DPB-E1L-A10L13--W955, DP = Industrial Diverter Port ball valve	DPB-E1L-A10L13--W955	6	$6,530.00

N	SPN-K5L-J--S Industrial 2-way 3-piece ball valve, Adjust-O-Seal®, live loaded stem packing	SPN-K5L-J—S	2	$5,726.00
N	"SPN1J5U-J--S Industrial 2-way 3-piece ball valve, Adjust-O-Seal®, live loaded stem packing"	SPN1J5U-J--S	26	$5,879.00
N	SPN-E5S-J--S Industrial 2-way 3-piece ball valve, Adjust-O-Seal®, live loaded stem packing	SPN-E5S-J—S	12	$1,366.00
N	SPN-F5S-J--S Industrial 2-way 3-piece ball valve, Adjust-O-Seal®, live loaded stem packing	SPN-F5S-J—S	5	$2,087.00
N	"MILWAUKEE VALVE FIGURE 1041 VALVE, GLOBE, 2-1/2" NPS, ANSI B16.5 150# FLAT FACE, BRONZE BODY, NI-CU ALLOY INTERNALS, NAVSEA 803-1385541 MATERIAL: ALUM BRONZE ASTM B-148"	803-13855451	9	$7,307.69
N	MILWAUKEE VALVE FIGURE 161A VALVE, GLOBE, 1" NPS, UNION END, BRONZE BODY, NI-CU ALLOY INTERNALS, NAVSEA 803-4384536 MATERIAL: ALUM BRONZE ASTM B-148	803-4384536	5	$843.60
N	"MILWAUKEE VALVE FIGURE 1146) VALVE, GATE, 1/2" NPS, SIL-BRZ UNION END X 1/2" FPT, 400 PSI WOG, NON-RISING STEM, THREADED BONNET, NITRILE O-RING, SOLID WEDGE, NAVSEA DWG 803-1385714 MATERIAL: BRONZE ASTM B-61"	803-4385714	11	$692.31

2. REFERENCES

COAST GUARD DRAWINGS

Coast Guard Drawing 420-WAGB_256_1, Rev J, Diagram Main Seawater Circulating System

Coast Guard Drawing 420-WAGB_256_9, Rev -, SLEP Main Seawater System Mods

Coast Guard Drawing 420-WAGB_507_4, Rev A, Machinery Label Plates

Coast Guard Drawing 420-WAGB_508_1, Rev F, PP & Mchry Insulation Sched

Coast Guard Drawing 420-WAGB_508_2, Rev D, Piping & Machinery Insulation Schedule L/M

Coast Guard Drawing 420-WAGB_524_1, Rev P, Diagram Auxiliary Seawater System

Coast Guard Drawing 420-WAGB_524_7, Rev B, SLEP Auxiliary Seawater System Mods

Coast Guard Drawing 420-WAGB_635_1, Rev D, Insulation Layouts & Dets

Coast Guard Drawing 420-WAGB_801_1, Rev K, Booklet of General Drawings

COAST GUARD PUBLICATIONS

Commandant Instruction Manual COMDTINST M10360.3D, January 2014, Coatings and Colors Manual

Surface Forces Logistics Center Standard Specification 0000 (SFLC Std Spec 0000), 2022, General Requirements

Surface Forces Logistics Center Standard Specification 0740, (SFLC Std Spec 0740) 2022 Edition, Welding and Allied Processes

Surface Forces Logistics Center Standard Specification 5000 (SFLC Std Spec 5000), 2022, Auxiliary Machine Systems

Surface Forces Logistics Center Standard Specification 3041, (SFLC Std Spec 3041) 2022 Edition, Shipboard Electrical Cable Test

Surface Forces Logistics Center Standard Specification 3042, (SFLC Std Spec 3042) 2022 Edition, Shipboard Electrical Cable Removal, Relocation, Splice, Repair and Installation

Surface Forces Logistics Center Standard Specification 6310 (SFLC Std Spec 6310), 2022, Requirements for Preservation of Ship Structures

OTHER REFERENCES

ASTM International (ASTM) F708, 2022, Standard Practice for Design and Installation of Rigid Pipe Hangers

Code of Federal Regulations (CFR) Title 29, Part 1915, Subpart E, Sep 2015, Scaffolds, Ladders and Other Working Surfaces

3. REQUIREMENTS

3.1 General.

3.1.1 CIR.

None.

3.1.2 Tech Rep. The Contractor must provide the following Technical Representative.

3.1.2.1 Global Controls Solutions, LLC. The Contractor must provide the services of an OEM authorized/ licensed Tech Rep for Adrick Marine Group Inc chiller units to accomplish the following on site:

- Provide manufacturer's proprietary system/ equipment information, software, and tools.
- Assist with and ensure compliance with manufacturer's procedures and standards during disassembly, inspection, repair, modification, calibration, and reassembly of the valves, equipment/system.

3.1.3 Protective measures. The Contractor must furnish and install all protective measures in accordance with SFLC Std Spec 0000, paragraph 3.3.3 (Vessel component, space, and equipment protection).

3.1.4 Interferences. The Contractor must handle all interferences in accordance with SFLC Std Spec 0000, (Interferences). Known interferences include, but are not limited to the following:

- Insulation
- Piping
- Sheathing and Lagging
- Cables
- Electrical power panels
- Electrical switch boxes
- Machinery

NOTE

Coast Guard personnel will operate all shipboard machinery and equipment.

3.1.5 Operational Test – Initial. Prior to commencement of work, the Contractor must witness Coast Guard personnel test of the Chillers, Reefers, ASW, ADGSW and MSW systems to demonstrate existing operational conditions. Record available gauge readings. Submit a CFR.

3.1.6 Inspection. The Contractor must perform a visual inspection of exposed areas after interferences are removed. Submit CFR if excessive corrosion or damage is found.

3.1.7 Welding and brazing. The Contractor must perform all welding, brazing, and non-destructive testing (NDT) in accordance with SFLC Std Spec 0740, Welding and Allied Processes.

3.1.8 Fluid disposal. The Contractor must drain all residual water from the affected piping; dispose of removed fluids in accordance with all applicable Federal, state, and local regulations. In the process of removal of system piping, the Contractor must not dispose of any fluid in onboard tanks or bilges.

3.1.9 Scaffolding or staging. The Contractor must provide and erect suitable staging or scaffolding, as required, to facilitate work in accordance with CFR Title 29, Part 1915, Subpart E.

3.1.10 Electrical. All electrical removals, installations and testing must be performed in accordance with SFLC Std Spec 3041 & SFLC Std Spec 3042.

3.1.11 Immediately after disconnecting or removing piping, the Contractor must completely seal all openings to the rest of the system using threaded caps, threaded plugs, or bolt-on blanks made of durable plastic or sheet-metal that is no less than 1/16-inch thick.

3.1.12 Material disposal. The Contractor must dispose of any component not being reused in accordance with all applicable Federal, state, and local regulations.

3.1.13 Work coordination. The Contractor must coordinate this work in conjunction with the following:

- Cycloconverter MSW Strainers, Modify
- Science Seawater Strainer, Install

3.2 Removals. The Contractor must perform the removals below. Any pipe supports/brackets not being reused in the installation must be removed, ground smooth and receive a touch up coating in accordance with SFLC Std Spec 6310 3.1.13. Any components retained for reinstallation must be cleaned, inspected and tagged for the proper reinstallation.

3.2.1 Science winch drives. The Contractor must remove the insulation, orifice plates & piping sections between flanges in the Winch Room (2-135-0-E) serving Oceanographic Winch and Trawl Core winch drive cabinets in accordance with the CG Drawing 420-WAGB_524_7.

3.2.2 ADG. The Contractor must remove the insulation, orifice plate and section of piping serving the ADG return piping in accordance with CG Drawing 420-WAGB_524_7.

3.2.3 AC chillers. The Contractor must remove insulation and seawater piping with associated components from three (3) chiller plants located in Refrigeration Machinery Room 3-33-0-E in accordance with CG Drawing 420-WAGB_524_7.

3.2.4 Food stores reefers. The Contractor must remove insulation and seawater piping with associated components from three (3) reefer plants located in Refrigeration Machinery Room 3-33-0-E in accordance with CG Drawing 420-WAGB_524_7.

3.2.5 Science reefers. The Contractor must remove insulation and seawater piping with associated components from two (2) Science Reefer plants located in the Reefer Equipment Room 1-105-0-Q in accordance with CG Drawing 420-WAGB_524_7.

3.2.6 CFW coolers. The Contractor must remove the insulation, orifice plates and sections of piping between flanges serving each of the CFW Coolers #1, #3, #5 & #7 in accordance with the CG Drawing 420-WAGB_256_9.

3.3 Installations. The Contractor must install the new piping and components as follows. All hangers must be installed in accordance with ASTM F708 with lined synthetic rubber and spacing must be no greater than 6 feet.

3.3.1 Science winch drives. The Contractor must provide and install one (1) new balancing orifice plate to the Trawl Core Winch drive cabinet, and two (2) new balancing orifice plates to the Oceanographic Winch drive cabinets in accordance with CG Drawing 420-WAGB_524_7.

3.3.2 ADG. The Contractor must provide and install one (1) new balancing orifice plate and one (1) new vacuum breaker/air purge valve serving the ADG in accordance with CG Drawing 420-WAGB_524_7. The vacuum breaker will be provided as GFE.

3.3.2.1 Install one (1) new vacuum breaker/air purge valve, provided as GFE, serving the ADG in accordance with CG Drawing CG Drawing 420-WAGB_524_7.

3.3.3 AC chillers. The Contractor must provide and install seawater piping with associated components serving the three (3) chiller plants located in Refrigeration Machinery Room 3-33-0-E in accordance with CG Drawing 420-WAGB_524_7. The water regulating valves will be provided as GFE.

3.3.3.1 The Contractor must install, program, and test new seawater regulating valves. The electric actuated seawater regulating valves must be reprogrammed to the existing plant Programmable Logic Controllers.

3.3.3.2 The chiller PLCs must be reconfigured as follows:

- Provide a 4-20 mA control signal to the seawater regulating valve.
- The signal must be generated by a PID loop using input from a pressure transducer sensing condenser (refrigerant) head pressure.
- The PID loop must be programmed to maintain a head pressure of 146 psig under all conditions of load in seawater ranging in temperature from 45°F to 95°F.
- PID gains must be tuned to achieve critical damping with zero offset in the loaded condition.

3.3.3.3 The Contractor must validate seawater regulating valve operation under all conditions of load. Chiller pulldown may be induced by means of activating the chilled water loop when system fluid is at ambient temperature, or by forcing load on the system by setting chilled water zone valves to full open and using the installed reheat capabilities. Chillers must be tested individually and PID gains must be set with all unloaders deactivated. Sea bay temperature must be increased from 60°F to 90°F in at least 3 steps by modulating the sea bay regulating valve. Stability must be verified by changing the head pressure setting 10 psig up or down to upset the system. The setting must be reverted to 146 psig when the testing is complete.

3.3.4 Food stores reefers. The Contractor must install seawater piping with associated components serving three (3) reefer plants located in Refrigeration Machinery Room 3-33-0-E in accordance with CG Drawing 420-WAGB_524_7. The water regulating valves will be provided as GFE.

3.3.4.1 The Contractor must install, program, and test new seawater regulating valves. Electric actuated seawater regulating valves must be reprogrammed to the existing plant Programmable Logic Controllers.

3.3.4.2 The reefer PLCs must be reconfigured as follows:

- Provide a 4-20 mA control signal to the seawater regulating valve.
- The signal must be generated by a PID loop using input from a pressure transducer sensing condenser (refrigerant) head pressure.
- The PID loop must be programmed to maintain a head pressure of 146 psig under all conditions of load in seawater ranging in temperature from 45°F to 95°F.

- PID gains must be tuned to achieve critical damping with zero offset in the loaded condition.

3.3.4.3 The Contractor must validate seawater regulating valve operation under all conditions of load. Reefers must be tested individually and PID gains must be set with all unloaders deactivated. Sea bay temperature must be increased from 60°F to 90°F in at least 3 steps by modulating the sea bay regulating valve. Stability must be verified by changing the head pressure setting 10 psig up or down to upset the system. The setting must be reverted to 146 psig when the testing is complete.

3.3.5 Science reefers. The Contractor must install seawater piping with associated components serving two (2) Science Reefer plants located in Reefer Equipment Room 1-105-0-Q in accordance with CG Drawing 420-WAGB_524_7. The water regulating valves will be provided as GFE.

3.3.5.1 The Contractor must install, program, and test new seawater regulating valves. Electric actuated seawater regulating valves must be reprogrammed to the existing plant Programmable Logic Controllers.

3.3.5.2 The reefer PLCs must be reconfigured as follows:

- Provide a 4-20 mA control signal to the seawater regulating valve.
- The signal must be generated by a PID loop using input from a pressure transducer sensing condenser (refrigerant) head pressure.
- The PID loop must be programmed to maintain a head pressure of 146 psig under all conditions of load in seawater ranging in temperature from 45°F to 95°F.
- PID gains must be tuned to achieve critical damping with zero offset in the loaded condition.

3.3.5.3 The Contractor must validate seawater regulating valve operation under all conditions of load. Reefers must be tested individually and PID gains must be set with all unloaders deactivated. Sea bay temperature must be increased from 60°F to 90°F in at least 3 steps by modulating the sea bay regulating valve. Stability must be verified by changing the head pressure setting 10 psig up or down to upset the system. The setting must be reverted to 146 psig when the testing is complete.

3.3.6 CFW coolers. The Contractor must provide and install four (4) new balancing orifice plates serving the Central Freshwater Coolers in accordance with CG Drawing 420-WAGB_256_9.

NOTE

Coast Guard personnel will operate all shipboard machinery and equipment. Prior to starting chillers, the crankcase heater must be energized for at least 24 hours.

3.4 Hydrostatic testing. The Contractor must, in the presence of the CG Inspector, conduct the following. Submit CFR with testing results.

3.4.1 Hydrostatically test all new/modified and disturbed piping in accordance with SFLC Std Spec 0740 Appendix C2.2.5. Hydrostatic test pressures are found in CG Drawings 420-WAGB_256_9 and 420-WAGB_524_7. Repair all test deficiencies and retest as applicable.

3.4.2 Hydrostatically test all new hose assemblies with their attached fittings. Test pressure must be 150% of the rated working pressure of the hose. Ensure no leakage from or permanent deformation of pressure-containing parts by repairing all leaks and discrepancies.

3.5 Insulation. The Contractor must insulate all new piping and any pipe/bulkhead insulation damaged during this work item in accordance with CG Drawings 420-WAGB_635_1, 420-WAGB_508_1 and 420-WAGB_508_2. Do not insulate piping until the hydrostatic testing is complete.

3.6 Labels/tags. The Contractor must fabricate and install new label plates and tags on applicable components as follows:

3.6.1 Fabricate and install new label plates in the Refrigeration Machinery Room 3-33-0-E in accordance with CG Drawing 420-WAGB_507_4 and 420-WAGB_524_7 Table 15D.

3.6.2 Fabricate and install new tags on the new Central Freshwater Coolers (CFW) MSW return system expansion joints in accordance with SFLC Std Spec 5000 Appendix C2.2.1.4. Service life date will be 12 years from the date of installation and Hydrostatic test information will be N/A. Serial numbers to be as follows:

- 1CFW-MSW-001
- 3CFW-MSW-001
- 5CFW-MSW-001
- 7CFW-MSW-001

3.6.3 Fabricate and install new tags on the new chiller hoses in accordance with SFLC Std Spec 5000, Figure C-2.2.1.4. Service life will be 12 years from the date of installation. Consult with the CG Inspector to identify the hose serial numbers.

- Hose Log Item Number (Serial Number)
- Hydrostatic Test Pressure (psi)
- Hydrostatic Test Date (DD/MM/YY)
- Service Life (Replacement Date) Date (QTR "Q"/FY)

3.6.3.3 For each new hose assembly, the Contractor must submit, at a minimum, the information listed below in Microsoft Excel format. Submit information via CFR.

- Hose Number
- System
- Associated Assembly (i.e. A/C Inlet, Oil Cooler Return, etc.)
- Item (Hose, Expansion Joint, etc.)
- Location (Compartment Number)
- Hose Length (in.)
- Hose Diameter (in.)
- Hose Brand
- Hose Part Number
- Hose Construction/Type (Synth Rubber, Teflon, Metal, Plastic, etc.)

- Fitting #1 Description/Material
- Fitting #1 Brand
- Fitting #1 Part Number
- Fitting #2 Description/Material
- Fitting #2 Brand
- Fitting #2 Part Number
- Hose Rated Pressure (psi)
- Hydrostatic Test Pressure (psi)
- Hydrostatic Test Date
- Hose Replacement Date

NOTE

Coast Guard personnel will operate all shipboard machinery and equipment.

3.7 Operational test, post repairs. After completion of work, the Contractor must thoroughly test, in the presence of the Coast Guard Inspector, and demonstrate all items or shipboard devices that have been disturbed, used, repaired, altered, or installed to be in satisfactory operating condition. Record available gauge readings. Submit all test memos, results of overhaul, inspection findings, and test results via CFR.

3.7.1 All new installed gauges and measuring devices must be calibrated prior to delivery and final testing.

3.7.2 Contractor must witness an operational test by Coast Guard personnel. All installed electronic seawater regulating valves must be tested for normal operation as well as manual override.

3.8 Touch-up preservation. The Contractor must prepare and coat all new and disturbed surfaces to match existing adjacent surfaces in accordance with SFLC Std Spec 6310, paragraph 3.1.13 (Touch-ups and minor coating repairs).

3.9 Redlined Drawing Deliverables. The Contractor must “red-line” applicable Coast Guard drawing(s) referenced above to reflect the work or deviations specified in this work item in accordance SFLC Std Spec 0850. Submit a CFR.

4. NOTES

This section is not applicable to this work item.

WORK ITEM 31: Science Sea Water Strainer (SLEP)

1. SCOPE

1.1 Intent. This work item describes the requirements for the Contractor to install a 4" Duplex Strainer on the 3rd deck near Frame 107 centerline at the Upper-Level Motor Room (4-102-0-E) in the Science Seawater (SSW) System.

1.2 Government-furnished property.

MTI	ITEM DESCRIPTION	NSN/PN	QTY	ESTIMATED COST ($/UNIT)
N	VALVE, GATE, 4" NPS, HASTELLOY BODY, 150# ANSI FLANGED, CW-12MW OBTU./N10276 STEM, A494 CW-12MW BACK SEAT & BODY SEAT. (LADISH VALVES DWG# : 8275-1201-GG01-A40C	8275-1201-GG01-A40C	5	$14,175.00

2. REFERENCES

COAST GUARD DRAWINGS

Coast Guard Drawing 420-WAGB_101_4, Rev C, Construction Drawing Units 105

Coast Guard Drawing 420-WAGB_256_10, Rev -. SLEP Cycloconverter MSW Strainer Relocation

Coast Guard Drawing 420-WMSL_507_1, Rev C, Valve Label Plates

Coast Guard Drawing 420-WAGB_508_1, Rev F. PP & Mchry Insulation Sched

Coast Guard Drawing 420-WAGB_508_2, Rev D. Piping & Machinery Insulation Schedule L/M

Coast Guard Drawing 420-WAGB_505_74, Rev D. Piping Arrangement Unit 106

Coast Guard Drawing 420-WAGB_524_1, Rev P. Diagram Auxiliary Seawater System

Coast Guard Drawing 420-WAGB_524_8, Rev 1. SLEP Aft Science SW Duplex Strainer Install

Coast Guard Drawing 420-WAGB_635_1, Rev D, Insulation Layouts & Dets

Coast Guard Drawing 420-WAGB_801_1, Rev K, Booklet of General Drawings

COAST GUARD PUBLICATIONS

Coast Guard Commandant Instruction (COMDTINST) M10360.3 (Series), Coatings and Color Manual

Surface Forces Logistics Center Standard Specification 0000 (SFLC Std Spec 0000), 2022, General Requirements

Surface Forces Logistics Center Standard Specification 0740, (SFLC Std Spec 0740) 2022 Edition, Welding and Allied Processes

Surface Forces Logistics Center Standard Specification 5000 (SFLC Std Spec 5000), 2022, Auxiliary Machine Systems

Surface Forces Logistics Center Standard Specification 6310 (SFLC Std Spec 6310), 2022, Requirements for Preservation of Ship Structures

OTHER REFERENCES

ASTM International (ASTM) F708, 2022, Standard Practice for Design and Installation of Rigid Pipe Hangers

Code of Federal Regulations (CFR) Title 29, Part 1915, Subpart E, Sep 2015, Scaffolds, Ladders and Other Working Surfaces

3. REQUIREMENTS

3.1 General.

3.1.1 CIR.

None.

3.1.2 Tech Rep.

Not applicable.

3.1.3 Protective measures. The Contractor must furnish and install all protective measures in accordance with SFLC Std Spec 0000, paragraph 3.3.3 (Vessel component, space, and equipment protection).

3.1.4 Interferences. The Contractor must handle all interferences in accordance with SFLC Std Spec 0000, (Interferences). Known interferences include, but are not limited to the following:

- Insulation
- Piping
- Cables
- Machinery
- Main Motor

NOTE

Coast Guard personnel will operate all shipboard machinery and equipment.

3.1.5 Operational Test – Initial. Prior to commencement of work, the Contractor must witness Coast

Guard personnel perform an initial operational test of the equipment listed below to demonstrate existing operational condition. Submit a CFR.

- Deck drains
- SSW System

3.1.6 Welding and brazing. The Contractor must perform all welding, brazing, and non-destructive testing (NDT) in accordance with SFLC Std Spec 0740, Welding and Allied Processes. The materials being welded require back-purging to prevent heavy oxidation of the welds. The USCG will not accept any weld procedure that does not include back-purging.

3.1.7 Fluid disposal. The Contractor must drain all residual water from the affected piping; dispose of removed fluids in accordance with all applicable Federal, state, and local regulations. In the process of removal of system piping, the Contractor must not dispose of any fluid in onboard tanks or bilges.

3.1.8 Material disposal. The Contractor must dispose of any component not being reused in accordance with all applicable Federal, state, and local regulations.

3.1.9 Scaffolding or staging. The Contractor must provide and erect suitable staging or scaffolding, as required, to facilitate work in accordance with CFR Title 29, Part 1915, Subpart E.

3.1.10 Work coordination. The Contractor must coordinate this work in conjunction with the following:

- MDG-ASW-ADG Seawater Piping, Modify
- Cycloconverter MSW Strainers, Modify

3.2 Removals. The Contractor must perform the rip-out of the section of SSW piping in accordance with CG Drawing 420-WAGB_524_8. Any pipe supports/brackets not being reused in the installation must be removed, surfaces ground smooth and receive a touch up coating in accordance with SFLC Std Spec 6310 3.1.13.

3.2.1 Immediately after disconnecting or removing piping, the Contractor must completely seal all openings to the rest of the system using threaded caps, threaded plugs, or bolt-on blanks made of durable plastic or sheet-metal that is no less than 1/16-inch thick.

3.3 Installations. The Contractor must provide all material, with the exception of the GFE Strainer Assembly, and install the following in accordance with CG Drawing 420-WAGB_524_8.

3.3.1 Strainer foundation and coaming. The Contractor must install new foundation and coaming around the strainer assembly.

3.3.2 Strainer. The Contractor must install the new duplex strainer, in accordance with manufacturer's instructions.

3.3.3 SSW piping. The Contractor must provide and install all piping and piping components to the new duplex strainer.

3.3.3.1 All hangers and supports must be installed in accordance with ASTM F708 with lined synthetic rubber and spacing must be no greater than 6 feet.

3.3.3.2 All new and disturbed piping must be flushed with fresh water until all debris is removed, but no less than five minutes. Ensure flushing fluid is directed to move scale and foreign debris away from installed machinery to prevent possible damage upon operational testing.

3.3.4 Differential pressure gauges. Install a differential pressure gauge and gauge panel foundation. New gauge must be calibrated in accordance with SFLC Std Spec 5000 Appendix C2.5.2.

3.4 Hydrostatic testing. The Contractor must, in the presence of the CG Inspector, hydrostatically test all new/modified and disturbed piping in accordance with SFLC Std Spec 0740 Appendix C2.2.5. Hydrostatic test pressures are found in CG Drawing 420-WAGB_524_1. Repair all test deficiencies and retest as applicable. Submit CFR.

3.5 Insulation. The Contractor must insulate all new piping and any pipe/bulkhead/overhead insulation disturbed or damaged during this work item in accordance with CG Drawings 420-WAGB_635_1, 420-WAGB_508_1 and 420-WAGB_508_2. Do not insulate piping until the hydrostatic testing is complete.

Note

The USCG will procure and install any necessary damage control classification placards for the new deck drains.

3.6 Labels/tags. The Contractor must fabricate and install new valve label plates in accordance with CG Drawing 420-WAGB_507_1. Label plate text must be black on silver background. Format text in accordance with CG Drawing 420-WAGB_507_1. Each tag must be labeled as follows.

- SSW-V-021 * SSW STRNR SUPPLY
- SSW-V-022 * SSW STRNR RETURN
- SSW-V-023 * SSW STRNR BYPASS

3.6.1 Stencil the new SSW piping insulation in a contrasting color showing the direction of flow and service (SSW Supply or SSW Return). Two markings per direction must be spaced to adequately identify the piping system.

3.7 Operational test, post repairs. After completion of work, the Contractor must thoroughly test, in the presence of the Coast Guard Inspector, and demonstrate all items or shipboard devices that have been disturbed, used, repaired, altered, or installed to be in satisfactory operating condition. Record all available gauge readings. Submit CFR.

3.8 Touch-up preservation. The Contractor must prepare and coat all new and disturbed surfaces to match existing adjacent surfaces in accordance with SFLC Std Spec 6310, paragraph 3.1.13 (Touch-ups and minor coating repairs).

3.9 Redlined Drawing Deliverables. The Contractor must “red-line” applicable Coast Guard drawing(s) referenced above to reflect the work or deviations specified in this work item in accordance SFLC Std Spec 0850. Submit a CFR.

4. NOTES

This section is not applicable to this work item.

WORK ITEM 32: A-Frames, Inspect and Repair

1. SCOPE

1.1 Intent. This work item describes the requirements for the Contractor to conduct an inspection, maintenance and repair on the Starboard and Aft A-Frame davit assemblies and Hydraulic Power Units (HPU).

1.2 Government-furnished property.

MTI	ITEM DESCRIPTION	NSN/PN	QTY	ESTIMATED COST ($/UNIT)
Y	Hydraulic Cylinder, Aft A frame	3040-01-458-3253	2	$24,025
Y	Hydraulic Cylinder, Stbd A frame	3040-01-458-3238	2	$9,177

2. REFERENCES

COAST GUARD DRAWINGS

Coast Guard Drawing 420-WAGB_184_11, Rev C, Fdns For Aft “A”-Frame Obstruction Lights (Install)

Coast Guard Drawing 420-WAGB_320_34, Rev B, Electrical Schematic and Wiring Diagram A-Frame

Coast Guard Drawing 420-WAGB_573_22, Rev -, Aft. "A" Frame Cylinder Pivot Details

Coast Guard Drawing 420-WAGB_573_23, Rev -, Aft. "A" Frame Hydraulic Cylinder Assembly

Coast Guard Drawing 420-WAGB_573_24, Rev -, Aft. "A" Frame Miscellaneous Details

Coast Guard Drawing 420-WAGB_573_26, Rev -, Aft. "A" Frame Catwalk & Misc. Details

Coast Guard Drawing 420-WAGB_573_27, Rev -, Aft. "A" Frames Typ. Pin Detail

Coast Guard Drawing 420-WAGB_573_28, Rev -, Aft. "A" Frame HSI Corp. Lug Modifications

Coast Guard Drawing 420-WAGB_573_29, Rev -, Side "A" Frame Hydraulic Cylinder Assembly

Coast Guard Drawing 420-WAGB_573_30, Rev -, Stbd "A" Frame Cylinder Pivot Detail

Coast Guard Drawing 420-WAGB_573_31, Rev -, Stbd "A" Frame Catwalk & Miscellaneous Details

Coast Guard Drawing 420-WAGB_573_32, Rev -, Stbd "A" Frame Catwalk Relocation Flood Light Location

Coast Guard Drawing 420-WAGB_573_545, Rev G, Aft. "A" Frame Base Weldment

Coast Guard Drawing 420-WAGB_573_546, Rev E, Stbd "A" Frame Base Weldment

Coast Guard Drawing 420-WAGB_573_547, Rev -, Hydraulic Cylinder Aft a-Frame

Coast Guard Drawing 420-WAGB_573_548, Rev -, Hydraulic Cylinder Starboard a-Frame

Coast Guard Drawing 420-WAGB_573_558, Rev C, Aft. "A" Frame Stop Tube Weldment

Coast Guard Drawing 420-WAGB_573_559, Rev B, Side "A" Frame Stop Tube Weldment

Coast Guard Drawing 420-WAGB_573_9, Rev -, Assembly Details Aft A-Frame

Coast Guard Drawing 420-WAGB_801_1, Rev K, Booklet of General Drawings

Coast Guard Drawing FL-1702-11, Sheave Inspection

COAST GUARD PUBLICATIONS

Coast Guard Technical Publication (TP) 5221, 01-NOV-03, SG700-AP-MMC-010 - A-Frames

Coast Guard Technical Publication (TP) 5214, 23-FEB-11, SG700-AM-MMC-010 - Hydraulic Power Unit (HPU), Aft General Service

Coast Guard Commandant Instruction (COMDTINST) M10360.3 (Series), Coatings and Color Manual

Surface Forces Logistics Center Standard Specification 0000 (SFLC Std Spec 0000), 2022, General Requirements

Surface Forces Logistics Center Standard Specification 5000 (SFLC Std Spec 5000), 2022, Auxiliary Machinery Systems

Surface Forces Logistics Center Standard Specification 6310 (SFLC Std Spec 6310), 2022, Requirements for Preservation of Ships Structures

OTHER REFERENCES

None.

3. REQUIREMENTS

3.1 General.

3.1.1 CIR. The Contractor must submit a CIR for the inspections listed in the following paragraph(s):

3.2 Operate and Inspect.

3.1.2 Tech Rep. The Contractor must provide the services of an AMPP Senior Certified Coatings Inspector (NACE CIP Level 3/SSPC PCI Level 3) with Marine Coatings Inspection Specialty to

- Serve as an Independent Coating Tech Rep.
- Accomplish applicable requirements in SFLC Std Spec 0000, Paragraph 3.2.4.2.2 (Coating Tech Rep).
- Oversee the Preservation Plan requirements in SFLC Std Spec 6310, Paragraph 3.2 (Preservation plan).
- Review and sign daily reports summarizing work. See forms QA-1 through QA-5 provided in the General Requirements.
- Submit reports to the COR within 24 hours of each inspection.

3.1.2.2.1 Qualifications/certifications. Submit the Coating Tech Rep's qualifications/certifications in accordance with SFLC Std Spec 0000, 3.2.4.2.2.3 and 3.2.4.2.4, include name, certificate number and documented completion of relevant AMPP (NACE/SSPC) Courses and Exams.

3.1.2.2.2 Submit the name and the certification of the Tech Rep to the COR at the Arrival Conference. Include the dates of services the Qualified Tech Reps will be on site as per their subcontract documentation.

3.1.3 Protective measures. The Contractor must furnish and install all protective measures in accordance with SFLC Std Spec 0000, paragraph 3.3.3 (Vessel component, space, and equipment protection).

3.1.4 Interferences. The Contractor must handle all interferences in accordance with SFLC Std Spec 0000, paragraph 3.3.5 (Interferences). Known interferences include, but are not limited to, the following:

- Hoses and piping.
- Wiring
- Insulation

3.1.5 All A-Frame surfaces are considered "Critical-coated surfaces" in accordance with SFLC Std Spec 6310.

3.1.6 Apply paint "Stripe Coats", as applicable, in accordance with SFLC Std Spec 6310 paragraph 3.1.11.

3.1.7 Non-Destructive Examinations (NDE) must be performed by qualified personnel in accordance with SFLC Std Spec 0740 Appendix C2.6.

NOTE
Coast Guard personnel will operate all shipboard machinery and equipment.

3.2 Operate and inspect. The Contractor must perform the following on both the Aft and Starboard A-Frames and the #1 & #2 Aft General Services HPU's in accordance with CG Tech Pubs 5221 & 5214. Submit CIR.

- 3.2.1 Operate & inspect A-Frames in accordance with CG Tech Pub 5221 and SFLC Std Spec 5000 paragraph 3.2.1 & Appendix B2.4.1
- Operate from local and remote stations
- Test all emergency stops
- Check A-Frame speed timing, fully loaded, in accordance with Coast Guard TP 5221 Chapter 1, Table 1-2

3.2.1 Operate and Inspect both Aft General Services HPU's in accordance with SFLC Std Spec paragraph 3.2.1 and CG Tech Pub 5214.

3.2.1.1 Draw a hydraulic sample from both HPU's and send for analysis in accordance with SFLC Std Spec 5000 Appendix C2.1.3. Submit CFR with test results compared with the acceptable contamination level noted in SFLC Std Spec 5000 Appendix C2.1.4.

3.3 Aft A-Frame service. The Contractor must perform the following on the Aft A-Frame using the references in Section 2 for guidance.

3.3.1 Hydraulic cylinders. Remove and replace the hydraulic cylinders with GFM hydraulic cylinders. Crate the removed cylinders in the crates the new cylinders came in and return to the CG Inspector.

3.3.1.1 While the cylinders are removed, conduct an NDE, magnetic particle (MT) or penetrant (PT), of the cylinder pad-eyes in accordance with SFLC Std Spec 5000. Measure bushing dimensions for excessive wear. Submit CFR.

3.3.1.2 Inspect the hose insulation and test the heat trace system for proper operation. Submit CFR.

3.3.2 Stop tubes. Remove and reinstall the four stop tubes.

3.3.2.1 While the stop-tubes are removed, conduct an NDE (MT or PT) of the stop tube pad-eyes in accordance with SFLC Std Spec 5000. Measure bushing dimensions for excessive wear. Submit CFR.

3.3.2.2 Conduct a partial preservation of the four stop tubes in accordance with SFLC Std Spec 6310. Apply an additional 100% finish coat.

3.3.3 Miscellaneous components. Remove the following components, inspect and preserve the attachment points/brackets, and reinstall using new 316 stainless steel hardware.

- Lights
- Catwalk

3.3.4 Sheave pad-eyes. Remove any installed sheaves, assume 2 will be installed, and conduct an NDE (MT or PT) of the all the a-frame sheave pad-eyes in accordance with SFLC Std Spec 0740. Submit CFR.

3.3.4.1 While the sheaves are removed, clean and inspect the sheaves, measure for excessive wear in accordance with Coast Guard Drawing FL-1702-11.

3.3.5 Handrail. Renew and preserve the missing section of handrail (approximately 5 feet) in accordance with Coast Guard Drawing 420-WAGB_572_26. See Figure 1 which shows the missing section. Conduct an inspection of the entire handrail system.

3.4 Starboard A-Frame service. The Contractor must perform the following on the Stbd A-Frame using the references in Section 2 for guidance.

3.4.1 Hydraulic cylinders. Remove and replace the hydraulic cylinders with GFM hydraulic cylinders. Crate the removed cylinders in the crates the new cylinders came in and return to the CG Inspector.

3.4.1.1 While the cylinders are removed, conduct an NDE (MT or PT) of the cylinder pad-eyes in accordance with SFLC Std Spec 5000. Measure bushing dimensions for excessive wear. Submit CFR.

3.4.1.2 Inspect the hose insulation and test the heat trace system for proper operation. Submit CFR.

3.4.2 Stop tubes. Remove and reinstall the four stop tubes.

3.4.2.1 While the stop-tubes are removed, conduct an NDE (MT or PT) of the stop tube pad-eyes in accordance with SFLC Std Spec 5000. Measure bushing dimensions for excessive wear. Submit CFR.

3.4.2.2 Conduct a partial preservation of the four stop tubes in accordance with SFLC Std Spec 6310. Apply an additional 100% finish coat.

3.4.3 Miscellaneous components. Remove the following components, inspect and preserve the attachment points/brackets, and reinstall using new 316 stainless steel hardware and/or cables.

- Lights
- Catwalk
- Camera
- Light switch and electrical j-box
- Sound powered phone jack and storage box
- Hydraulic hose hangers –See Figure 3
- Ladder – conduct an NDE (MT or PT) on the ladder attachment points

3.4.4 Sheave pad-eyes. Remove any installed sheaves, assume one will be installed, and conduct an NDE (MT or PT) of all the a-frame pad-eyes in accordance with SFLC Std Spec 0740. Submit CFR.

3.4.4.1 While the sheave is removed, clean and inspect the sheave, and measure for excessive wear in accordance with Coast Guard Drawing FL-1702-11.

3.4.5 A-Frame spacers. Remove and reinstall the a-frame spacers. Perform the following once spacers are removed. See Figure 2 for reference.

3.4.5.1 Repair the cracked spacer foundation.

3.4.5.2 Preserve the spacer foundation prior to reinstalling the spacers. Use new 316 stainless steel hardware.

3.4 Partial preservation. The Contractor must conduct a partial preservation of both Aft and Stbd A-Frames in accordance with SFLC Std Spec 6310 and COMDTINST M10360.3. Apply a 100% finish coat.

3.4.1 Ensure all welds seams, edges, and surfaces with complex geometric shapes receive a stripe coat in accordance with SFLC Std Spec 6310 paragraph 3.1.11.

3.4.2 Conduct the preservation work prior to reinstalling the removed components.

3.5 Groom and Lubricate. The Contractor must Groom and Lubricate the Aft and Starboard A-Frames and the #1 & #2 Aft General Services HPU's in accordance with SFLC Std Spec 5000 paragraph 3.2.6. CG TP 5221, and CG TP 5214.

3.5.1 #1 and #2 HPU. Conduct all ‘annual’ maintenance actions listed in CG Tech Pub 5214 Table 4-1.

3.5.1.1 Provide and renew the pressure, return and case drain filter elements in accordance with CG Tech Pub 5214 paragraph 4.7.

3.5.2 A-Frame grease fittings. Ensure all grease fittings are serviceable. Renew any grease fittings that do not pass inspection or are missing. For bidding purposes, assume that 5 fittings per A-frame will need to be renewed.

NOTE
Coast Guard personnel will operate all shipboard machinery and equipment.

3.6 Final Operational test. After completion of all other work and in the presence of a CG Inspector, conduct static weight test using the weight listed in Table 1. Submit CFR with test results.

TABLE 1 – STATIC WEIGHT TEST LOADS

LOCATION	STATIC LOAD
AFT A-Frame	168,000 lbs.
STBD A-Frame	15,000 lbs.

3.7 Label plates. The Contractor must fabricate and install a label plate on the Aft and Starboard A-Frames to document the satisfactory test completion in accordance with SFLC Std Spec 5000, Appendix B, Paragraph B2.9 (Label Plates).

3.8 Touch-up preservation. The Contractor must prepare and coat all new and disturbed exterior and interior surfaces to match existing adjacent surfaces, in accordance SFLC Std Spec 6310, 3.1.13.

4. NOTES

Figure 1 - Aft A-Frame missing handrail

Figure 2 - Stbd A-Frame UHMW Spacers, showing crack in the spacer foundation.

Figure 3 - Hydraulic hose hangers

WORK ITEM 33: Science Van Monorail System, Overhaul

1. SCOPE

1.1 Intent. This work item describes the requirements for the Contractor to disassemble, inspect, repair, and preserve the Science Van Monorail System, see Section 4 for photos of the system.

1.2 Government-furnished property.

None.

2. REFERENCES

COAST GUARD DRAWINGS

Coast Guard Drawing 420-WAGB_665_2, Rev J, Misc Monorails

Coast Guard Drawing 420-WAGB_801_1, Rev K, Booklet of General Drawings

COAST GUARD PUBLICATIONS

Surface Forces Logistics Center Standard Specification 0000 (SFLC Std Spec 0000), 2022, General Requirements

Surface Forces Logistics Center Standard Specification 0740 (SFLC Std Spec 0740), 2022, Welding and Allied Processes

Surface Forces Logistics Center Standard Specification 6310 (SFLC Std Spec 6310), 2022, Requirements for Preservation of Ship Structures

OTHER REFERENCES

ASME Standard (ASME) B30.17, 2020, Cranes and Monorails (with Underhung Trolley or Bridge)

ASTM International (ASTM) A6/A6M, 2026, Standard Specification for General Requirements for Rolled Structural Steel Bars, Plates, Shapes, and Sheet Piling

Code of Federal Regulations (CFR) Title 29, Part 1915, Jul 2008, Occupational Safety and Health Standards for Shipyard Employment

3. REQUIREMENTS

3.1 General.

3.1.1 CIR.

None.

3.1.2 Tech Rep. The Contractor must provide the services of the following:

3.1.2.1 Certified Coating Inspector having successfully completed relevant AMPP (NACE/SSPC) Programs and Trainings to:

- Serve as an Independent Coating Tech Rep.
- Accomplish applicable requirements in SFLC Std Spec 0000, Paragraph 3.2.4.2.2 (Coating Tech Rep).
- Oversee the Preservation Plan requirements in SFLC Std Spec 6310, Paragraph 3.2 (Preservation plan).
- Review and sign daily reports summarizing work. See forms QA-1 thru QA-5 provided in the General Requirements.
- Submit reports to the COR within 24 hours of each inspection.

3.1.2.1.1 Submit the Coating Tech Rep's qualifications/certifications in accordance with SFLC Std Spec 0000, 3.2.4.2.2.3 and 3.2.4.2.4, include name, certificate number and documented completion of relevant AMPP (NACE/SSPC) Courses and Exams.

3.1.2.1.2 Submit the name and the certification of the Tech Rep to the COR at the Arrival Conference. Include the dates of services the Qualified Tech Reps will be on site as per their subcontract documentation.

3.1.2.2 Non-destructive examiner holding an ASNT Central Certification Program (ACCP) Level II certification or better, or SNT-TC-TA NDT Level II or better to accomplish the following on site:

- Accomplish the applicable requirements in SFLC Std Spec 0740 Appendix C, Nondestructive Examination (Ultrasonic Inspection).

3.1.2.3 Crane Inspector. Qualified Crane/Monorail inspector in accordance with ASME B30.17 to perform the following onsite:

- Perform the Monorail System inspection
- Perform the chain trolley hoist inspection
- Submit inspection report with any suggested repairs

3.1.2.3.1 Submit the Crane Inspector's qualifications/certifications, prior to the inspection, demonstrating the following:

- Documented training in ASME B30.17 inspection requirements
- At least 5-years' experience inspecting monorails/underhung systems

3.1.3 Protective measures. The Contractor must furnish and install all protective measures in accordance with SFLC Std Spec 0000, (Vessel component, space, and equipment protection).

3.1.4 Interferences. The Contractor must handle all interferences in accordance with SFLC Std Spec 0000, paragraph 3.3.5 (Interferences). Known interferences include but are not limited to:

- Elevated structures.
- Equipment

3.1.5 Scaffolding. The Contractor must, in accordance with 29 CFR 1915, Subpart E, erect suitable staging or scaffolding, as required, to facilitate to perform work.

NOTE
Surfaces being preserved are considered "critical-coated surfaces".

3.2 Quality assurances and controls. The Contractor must abide by all the safety, preservation, and quality control requirements specified in SFLC Std Spec 0000, Paragraph 3.2.4.2 (In-process QC measures for "critical-coated surfaces"), and the quality controls specified in SFLC Std Spec 6310, Paragraph 3.1.10 (Coating inspection) and 3.1.15 (Coating system tests).

3.3 Disassembly. The Contractor must disassemble all components of the Monorail System. This includes removing the Trolley Hoist, all Monorail pivoting sections, stops, guides, etc. See Coast Guard Drawing 420-WAGB_665_2 (Sheets 30-32B) for details.

3.4 Inspection. The Contractor must perform a comprehensive inspection of the Monorail System beam, associated structural elements, and all components supporting the trolley operation. The inspection must determine the condition, integrity, alignment, and fitness for service of the Monorail Trolley System in accordance with ASME B30.17, ASTM A6/A6M, CG Drawing 420-WAGB_665_2 and SFLC Std Spec 5000. Submit CFR with all findings and any repair recommendations. Inspection must include but is not limited to:

- Visual inspection
    - Bottom flange, including running surfaces
    - Web surfaces
    - Top flange
    - Beam ends, connections, and supports
    - Evidence of corrosion, pitting, wastage, scoring, or wear
    - Deformation, deflection, buckling, or flange spreading
    - Welds
    - Fasteners, stiffeners, brackets, and supporting structure
    - Pivot pins and bushings
    - Rail guides
    - Rail stops
- Dimensional and alignment
    - Measure beam straightness
    - Measure flange thickness at suspect areas
- Non-destructive testing (NDT)
    - Conduct NDT where visual inspection indicates potential defects
- Trolley hoist
    - Service and Inspect hoist in accordance SFLC Std Spec 5000 paragraph 3.2.2. Chester Zephyr S/N LG3146 – USCG S/N57301-TH-026

3.5 Surface preservation. After all authorized repairs are complete, the Contractor must prepare the Monorail and Monorail supports/brackets by removing the coating system from the Monorail up to the Monorail supports where they attach to the underside of the 02 Deck. Preservation includes all stops and

guides. Use the preparation and coating system specified in SFLC Std Spec 6310 Appendix A-4 for Freeboard/Superstructure/Mast. Topcoat color is White 17925.

3.5.1 The Contractor must protect the pivot bushings prior to blasting.

3.5.2 The Contractor must feather edges of top coating into adjacent bare areas, to create a smooth transition.

3.5.3 Ensure all welds seams, edges, and surfaces with complex geometric shapes receive a stripe coat in accordance with SFLC Std Spec 6310 paragraph 3.1.11.

3.6 Reassembly. The Contractor must reassemble the Monorail trolley system using new stainless steel hardware, quick release pins w/ lanyards, in accordance with CG Drawing 420-WAGB_665_2 and CG Tech Pub 5326. Apply anti-seize compound to all threads and grease all bushings.

3.7 Operational and weight testing. The Contractor must perform operational and weight testing of the Trolley Hoist in accordance with SFLC Std Spec 5000 paragraph 3.2.8. Perform all tests at 125% of the rated working load. Submit CFR.

3.7.1 Dynamic test must have load clear of the ground and be raised and lowered a minimum of 1 foot.

3.7.2 Demonstrate the proper operation of all pivoting Monorails and locking mechanisms to the CG Inspector.

3.7.3 Demonstrate to the CG Inspector that the winch will move through all pivoting sections to the monorails over the working deck.

3.8 Label plate. The Contractor shall provide and attach a weight test label plate to the hoist in accordance with SFLC Std Spec 5000 Appendix B.

3.9 Touch-up preservation, general. The Contractor must prepare and coat all new and disturbed exterior and interior surfaces, as applicable, to match existing adjacent surfaces in accordance with SFLC Std Spec 6310, paragraph 3.1.13 (Touch-ups and minor coating repairs.)

4. NOTES

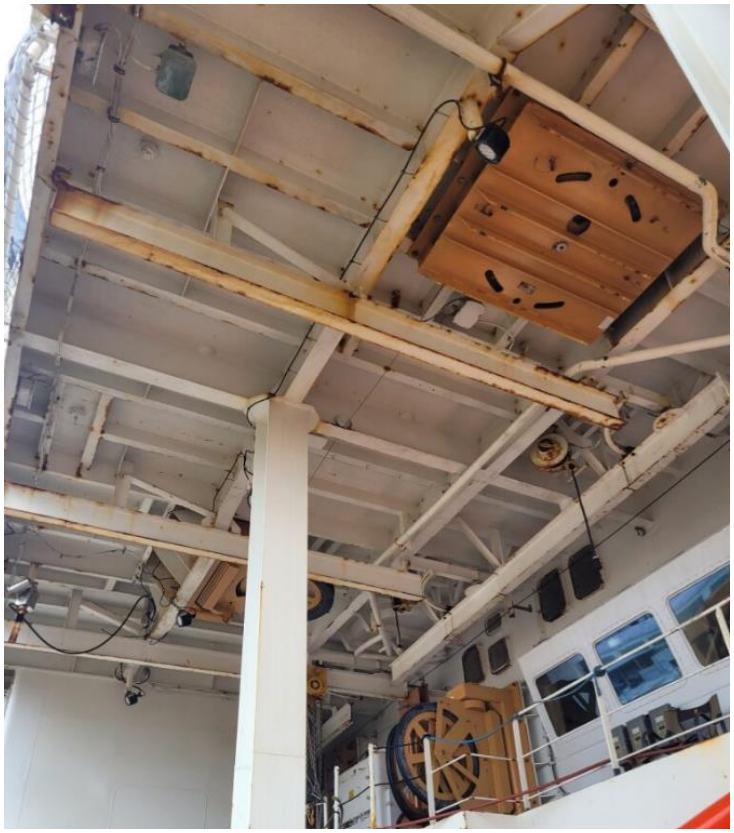

CHESTER
10 TON

WORK ITEM 34: Steam Trap, Renew

1. SCOPE

1.1 Intent. This work item describes the requirements for the Contractor to renew failed steam traps in various locations, per Table 1, in the Steam, Feed, and Condensate System.

1.2 Government-furnished property.

None.

2. REFERENCES

COAST GUARD DRAWINGS

Coast Guard Drawing 420-WAGB_508_1, Rev F, Pp & Mchry Insulation Sched

Coast Guard Drawing 420-WAGB_508_2, Rev D, Piping & Machinery Insulation Schedule L/M

Coast Guard Drawing 420-WAGB_535_1, Rev N, Diagram Steam, Feed & Condensate System

Coast Guard Drawing 420-WAGB_801_1, Rev K, Booklet of General Drawings

COAST GUARD PUBLICATIONS

Surface Forces Logistics Center Standard Specification 0000 (SFLC Std Spec 0000), 2022, General Requirements

Surface Forces Logistics Center Standard Specification 0740 (SFLC Std Spec 0740), 2022, Welding and Allied Processes

Surface Forces Logistics Center Standard Specification 6310 (SFLC Std Spec 6310), 2022, Requirements for Preservation of Ship Structures

OTHER REFERENCES

Code of Federal Regulations (CFR) Title 29, Part 1915, Subpart E, Sep 2015, Scaffolds, Ladders and Other Working Surfaces

3. REQUIREMENTS

3.1 General.

3.1.1 CIR. The Contractor must submit a CIR for the inspections listed in the following paragraph(s):

None.

3.1.2 Tech Rep.

Not Applicable.

3.1.3 Protective measures. The Contractor must furnish and install all protective measures in accordance with SFLC Std Spec 0000, paragraph 3.3.3 (Vessel component, space, and equipment protection).

3.1.4 Interferences. The Contractor must handle all interferences in accordance with SFLC Std Spec 0000, paragraph 3.3.5 (Interferences). Known interferences include, but are not limited to the following:

- Piping
- Insulation
- Machinery
- Ventilation
- Residual water

3.1.5 Hotwork. The Contractor must conduct all hotwork in accordance with SFLC Std Spec 0740.

3.1.6 Fluid disposal. The Contractor must drain all residual condensate water from the affected piping; dispose of removed fluids in accordance with all applicable Federal, state, and local regulations. In the process of removal of system piping, the Contractor must not dispose of any fluid in onboard tanks or bilges.

3.1.7 Scaffolding or staging. The Contractor must provide and erect suitable staging or scaffolding, as required, to facilitate work in accordance with CFR Title 29, Part 1915, Subpart E.

3.2 Operational test - initial. Prior to commencement of work, the Contractor must witness Coast Guard personnel perform an initial operational test of all items or shipboard devices to be disturbed, used, repaired, or altered, to demonstrate existing operational condition. This includes, but is not limited to, the Steam, Feed, and Condensate System. Use Coast Guard Drawings 420-WAGB_535_1 for reference. Submit a CFR.

3.3 Steam trap renewal. The Contractor must provide and renew all the failed steam traps in Table 1 in accordance with SFLC Std Spec 0740 and CG Dwg 420-WAGB_535_1. Replace the trap with the model specified in the Replacement Trap column.

3.3.1 Remove and dispose of insulation and/or lagging on the steam trap piping and/or flanges.

3.3.1.2 Take note of any markings on the insulation, markings will be applied to renewed insulation.

3.3.2 Disconnect, remove, and label the specified steam traps. Retain any label plates, the steam trap numbers must be transferred to the new traps. Use removed traps as templates for re-piping the new traps. Dispose of all failed traps after templating.

3.3.2.1 Immediately after disconnecting or removing piping, the Contractor must completely seal all openings to the rest of the system using threaded caps, threaded plugs, or bolt-on blanks made of durable plastic or sheet-metal that is no less than 1/16-inch thick.

3.3.3 Provide all material to pipe the new steam traps into the steam system. The Contractor may reuse the flange connections (if applicable) from the removed traps.

3.3.3.1 Flush all debris from the new traps and piping prior to installing into the steam system.

3.3.3.2 Provide and install the new traps with new gaskets and hardware in accordance with CG Drawing 420-WAGB_535_1.

NOTE
Coast Guard personnel will operate all shipboard machinery and equipment.

3.4 Testing and inspections. The Contractor, in the presence of the CG Inspector, must perform an operational test of the newly installed steam traps at normal operating pressures and temperatures. A hydrostatic test is not necessary due to the low operating pressure in this system. Submit CFR.

3.4.1. Soap test all disturbed and newly installed connections in the presence of the Coast Guard Inspector. Identify and correct any leaks then retest.

3.5 Insulation. The Contractor must install new insulation and/or blankets in accordance with CG Drawing 420_WAGB_508_1 and 420_WAGB_508_2. Do not insulate the steam traps.

3.5.1 Do not install any insulation until the operational leak checks have been completed.

3.5.2 Re-stencil markings on the new insulation in a contrasting color to show service and direction of flow.

3.6 Label Plates. The Contractor must attach the retained label plates to the new steam traps.

NOTE
Coast Guard personnel will operate all shipboard machinery and equipment.

3.7 Operational test – post repairs. After completion of work, the Contractor must witness Coast Guard personnel demonstrate operational test of all items or shipboard devices that have been disturbed, used, repaired, altered, or installed to be in satisfactory operating condition. Submit a CFR.

4. NOTES

TABLE 1 – LIST OF TRAPS TO BE RENEWED
(Trap numbers coincide with CG Dwg 420-WAGB_535_1)

Trap #	Location	Location Detail	Trap Model	Size	Connection Type	Press (PSI)	Replacement Model

10	Fan Room 01-29-5Q	Preheater 67	UFT32-4.5	0.5	Screwed	50	UFT32-4.5
12	Fan Room 01-29-5Q	Supply Sys 52 Back	UFT32-4.5	1	Screwed	50	UFT32-4.5
27	Fan Room 01-50-0-Q	Preheater 121 Heating coil 01-55-1	UBP30	0.5	Screwed	50	UBP32
29	Fan Room 01-50-0-Q	Cooling coil 01-53-01	UBP30	0.5	Screwed	50	UBP32
31	Fan Room 01-50-0-Q	Cooling coil 01-52-2	UBP30	0.5	Screwed	50	UBP32
34	Fan Room 01-50-0-Q	Preheater 79	UFT32-4.5	0.5	Flanged	50	UFT32-4.5
35	Fan Room 01-29-2-Q	Cooling coil 5 01-31-2	UBP32	0.5	Weld	50	UBP32
40	Weather Deck 01-33-8-X	Behind MCC 01-72-2	UTD52L	0.5	Weld	50	UTD52L
43	Fan Room 01-107-2-Q	Preheater 126	UFT32-4.5	0.5	Screwed	50	UFT32-4.5
60	Mess Deck	Med locker inside wall reheater 73	UFT32-4.5	0.5	Weld	50	UFT32-4.5
62	Dry Stores 3rd Deck	Reheater 76	UFT32-4.5	0.5	Weld	50	UFT32-4.5
63	Dry Stores 3rd Deck	Reheater 76	UFT32-4.5	0.5	Weld	50	UFT32-4.5
66	AC Flat 3-33-0-E	Convector 3	UTD52L	0.5	Weld	50	UTD52L
67	AC Flat 3-33-0-E	Convector 2	UTD52L	0.5	Weld	50	UTD52L
68	AC Flat 3-33-0-E	Convector 1	UTD52L	0.5	Weld	50	UTD52L

69	AC Flat 3-33-0-E	Convector 1	FT450-4.5	0.75	Weld	50	FT450-4.5
70	AC Flat 3-33-0-E	Convector 2	FT450-4.5	0.75	Weld	50	FT450-4.5
71	AC Flat 3-33-0-E	Convector 3	FT450-4.5	0.75	Screwed	50	FT450-4.5
75	BT/Sewage Treatment	SUH-27 Unit Heater	UFT32-4.5	0.5	Flanged	50	UFT32-4.5
80	AMR 5 2-63-0-E	Storage Tank / STM-V-38	UFT32-4.5	0.5	Weld	50	UFT32-4.5
83	AMR 5 2-63-0-E	4-MDEJW	FT450-4.5	1	Screwed	50	FT450-4.5
84	AMR 5 2-63-0-E	4-MDEJW	UFT32-4.5	0.5	Screwed	50	UFT32-4.5
90	Fan Room 03-84-2-Q	Reheater 23	UTD52L	0.5	Screwed	50	UTD52L
100	Fan Room 03-58-01-Q	By preheater 5 6	UBP30	0.5	Weld	50	UFT32-4.5
115	Medical Supply 02-50-0-L	Humidifier 14	UFT32-4.5	0.5	Weld	50	UFT32-4.5
118	Stores Hndlg 1-9-0-A	SCH 1	UBP30	0.5	Screwed	50	UBP32
122	Fan Room 04-58-1-Q	Humidifier 1	UBP30	0.5	Screwed	50	UBP32
125	Fan Room 04-58-1-Q	SRH Reheater 63	UBP32	0.5	Weld	50	UBP32
127	Fan Room 04-58-1-Q	Humidifier 2	UFT32-4.5	0.5	Flanged	50	UFT32-4.5
133	Fan Room 1-108-2-Q	Humidifier 1	UFT32-4.5	0.5	Weld	50	UFT32-4.5
134	Fan Room 1-108-2-Q	SPH 138	UFT32-4.5	0.75	Weld	50	UFT32-4.5

135	Fan Room 1-108-2-Q	SPH 137	UFT32-4.5	0.75	Weld	50	UFT32-4.5
145	Fan Room 1-108-2-Q	SPH 130	UTD52L	0.5	Screwed	50	UTD52L
150	Generator Room 1	SUH 7	FT450-4.5	1	Screwed	50	FT450-4.5
160	Generator Room 2	By SUH 15	UTD52L	0.5	Screwed	50	UTD52L
162	Lower Level AMR 1	Oil Water Separator	UFT32-4.5	0.5	Screwed	50	UFT32-4.5
163	AMR 2	Distiller 1	UFT32-4.5	0.5	Screwed	50	UFT32-4.5
164	AMR 3	Distiller 2	UTD52L	0.5	Screwed	50	UTD52L
181	1-9-0-A	SPH 72	UBP30	0.5	Weld	50	UBP32
184	Laundry	SRH 50	UBP30	0.5	Screwed	50	UBP32
190	MP Shop	SRH 120	UTD52L	0.5	Screwed	50	UTD52L
193	Scientific Cargo 2	SRH 117	UFT32-4.5	0.5	Weld	50	UFT32-4.5
207	Fan Room 02-59-1-Q	SPH 31	UBP30	0.5	Screwed	50	UBP32
210	Fan Room 02-59-1-Q	SPH 26	UFT32-4.5	0.5	Weld	50	UFT32-4.5
211	Fan Room 02-59-1-Q	SPH 27	UFT32-4.5	0.5	Weld	50	UFT32-4.5
212	Fan Room 02-59-1-Q	SPH 27	UFT32-4.5	0.5	Weld	50	UFT32-4.5
214	Fan Room 02-59-1-Q	Far end corner	UBP32	0.5	Screwed	50	UBP32
220	Arctic Gear 01-57-1-A	By Door	UBP30	0.5	Screwed	50	UBP32
229	Winch Room	SUH 44	UFT32-4.5	0.5	Weld	50	UFT32-4.5

239	Generator Room 1	By SUH 11 Cat Walk	UTD52L	0.5	Screwed	50	UTD52L
247	AMR 7	SUH 21	UFT32-4.5	0.5	Flanged	50	UFT32-4.5
248	AMR 8	Frame 2-101-2	UTD52L	0.5	Screwed	50	UTD52L
262	AMR 4 Lower level	FO Purifiers SLG TK Heater	UBP30	0.5	Weld	50	UBP32
268	AMR 1 Lower	FO Slug tank	UBP30	0.5	Weld	50	UBP32
270	Hydro styrene 3-113-5E	Tank Heater 2	UBP30	0.5	Weld	50	UBP32
279	CTES Comp. Rm.	SUH 4	UFT32-4.5	0.5	Weld	50	UFT32-4.5
283	Gen Rm. 1Boiler Upper Level	After PRV 2 1/2" line	UFT32-4.5	0.5	Weld	50	UFT32-4.5

WORK ITEM 35: Steam Trap, Replace

1. SCOPE

1.1 Intent. This work item describes the requirements for the Contractor to replace 19 various steam traps in the Steam, Feed, and Condensate System.

1.2 Government-furnished property.

MTI	ITEM DESCRIPTION	NSN/PN	QTY	ESTIMATED COST ($/UNIT)
N	Spirax Sarco Universal Connector, Model PC20, ½" IPS with blowdown	67980	18	497.00
N	Spirax Sarco Model UFT32-4.5 Universal Float & Thermostatic Steam Trap, Stainless Steel, PMO65 PSI	1465300	12	1,187.00
N	Spirax Sarco Model UBP32 Universal Balanced Pressure Thermostatic Steam Trap, Stainless Steel, with Near to Steam Capsule 7F PMO 464 PSI	1270900	6	574.00
N	Spirax Sarco Model VB-VS Combination Vacuum Breaker Balanced Pressure Air Vent 1/2" NPT	72147	1	783.00

2. REFERENCES

COAST GUARD DRAWINGS

Coast Guard Drawing 420-WAGB_508_1, Rev F, Pp & Mchry Insulation Sched

Coast Guard Drawing 420-WAGB_508_2, Rev D, Piping & Machinery Insulation Schedule L/M

Coast Guard Drawing 420-WAGB_535_1, Rev N, Diagram Steam, Feed & Condensate System

Coast Guard Drawing 420-WAGB_801_1, Rev K, Booklet of General Drawings

COAST GUARD PUBLICATIONS

Surface Forces Logistics Center Standard Specification 0000 (SFLC Std Spec 0000), 2022, General Requirements

Surface Forces Logistics Center Standard Specification 0740 (SFLC Std Spec 0740), 2022, Welding and Allied Processes

Surface Forces Logistics Center Standard Specification 6310 (SFLC Std Spec 6310), 2022, Requirements for Preservation of Ship Structures

OTHER REFERENCES

Code of Federal Regulations (CFR) Title 29, Part 1915, Subpart E, Sep 2015, Scaffolds, Ladders and Other Working Surfaces

3. REQUIREMENTS

3.1 General.

3.1.1 CIR.

None.

3.1.2 Tech Rep.

None.

3.1.3 Protective measures. The Contractor must furnish and install all protective measures in accordance with SFLC Std Spec 0000, paragraph 3.3.3 (Vessel component, space, and equipment protection).

3.1.4 Interferences. The Contractor must handle all interferences in accordance with SFLC Std Spec 0000, paragraph 3.3.5 (Interferences). Known interferences include, but are not limited to the following:

- Piping
- Insulation
- Machinery
- Ventilation
- Residual water

3.1.5 Welding and brazing. The Contractor must perform all welding, brazing, and non-destructive testing (NDT) in accordance with SFLC Std Spec 0740, Welding and Allied Processes.

3.1.6 Fluid disposal. The Contractor must drain all residual condensate water from the affected piping; dispose of removed fluids in accordance with all applicable Federal, state, and local regulations. In the process of removal of system piping, the Contractor must not dispose of any fluid in onboard tanks or bilges.

3.1.7 Scaffolding or staging. The Contractor must provide and erect suitable staging or scaffolding, as required, to facilitate work in accordance with CFR Title 29, Part 1915, Subpart E.

NOTE

Coast Guard personnel will operate all shipboard machinery and equipment.

3.2 Operational test, initial. Prior to commencement of work, the Contractor must witness Coast Guard personnel perform an initial operational test of all items or shipboard devices to be disturbed, used, repaired, or altered, to demonstrate existing operational condition. This includes, but is not limited to, the Steam, Feed, and Condensate System. Use CG Drawing 420-WAGB_535_1 for reference. Submit a CFR.

3.3 Steam Trap Renewal. The Contractor must remove the steam traps listed in Table 1 below and replace it with the Replacement Trap Model identified; traps will be provided as GFE. Reference CG Drawing 420-WAGB_535_1 for additional piping, connection and trap location information.

3.3.1 Remove and dispose of insulation and/or lagging on the steam trap piping and/or flanges.

3.3.1.2 Take note of any markings on the insulation, markings will be applied to renewed insulation.

3.3.2 Disconnect, remove, and label the specified steam traps. Retain any label plates, the steam trap numbers must be transferred to the new traps. Use removed traps as templates for re-piping the new traps. Dispose of all failed traps after templating.

3.3.2.1 Immediately after disconnecting or removing piping, the Contractor must completely seal all openings to the rest of the system using threaded caps, threaded plugs, or bolt-on blanks made of durable plastic or sheet-metal that is no less than 1/16-inch thick.

3.3.3 Using the provided Universal Connectors, pipe the new steam traps into the steam system. The Contractor may reuse the flange connections (if applicable) from the removed traps. Additional piping may be needed to pipe the steam trap into the system.

3.3.3.1 Flush all debris from the new traps and piping prior to installing into the steam system.

3.3.3.2 Provide and install the new traps with new gaskets and hardware in accordance with CG Drawing 420-WAGB_535_1.

NOTE
Coast Guard personnel will operate all shipboard machinery and equipment.

3.4 Testing and inspections. The Contractor, in the presence of the CG Inspector, must perform an operational test of the newly installed steam traps at normal operating pressures and temperatures. A hydrostatic test is not necessary due to the low operating pressure in this system. Submit CFR.

3.4.1. Soap test all disturbed and newly installed connections in the presence of the Coast Guard Inspector. Identify and correct any leaks then retest.

3.5 Insulation. The Contractor must install new insulation and/or blankets in accordance with CG Drawing 420_WAGB_508_1 and 420_WAGB_508_2. Do not insulate the steam traps.

3.5.1 Do not install any insulation until the operational leak checks have been completed.

3.5.2 Re-stencil markings on the new insulation in a contrasting color to show service and direction of flow.

3.6 Label Plates. The Contractor must attach the retained label plates to the new steam traps.

NOTE
Coast Guard personnel will operate all shipboard machinery and equipment.

3.7 Operational test, post repairs. After completion of work, the Contractor shall thoroughly test, in the presence of the Coast Guard Inspector, and demonstrate all items or shipboard devices that have been disturbed, used, repaired, altered, or installed to be in satisfactory operating condition. Submit a CFR.

4. NOTES

TABLE 1 – LIST OF TRAPS TO BE REPLACED
(Trap numbers coincide with CG Dwg 420-WAGB_535_1)

TRAP #	LOCATION	TRAP TYPE	CONNECTION TYPE	REPLACEMENT TRAP
19	Fan Room 01-42-3-Q	Armstrong TAVB-2	Screwed	VB-VS
41	Weather Deck 01-33-8-X	Armstrong 2011-70	Flanged	UFT32-4.5
42	Fan Room 01-107-2-Q	Armstrong TT-2000	Flanged	UBP32
44	Fan Room 01-107-2-Q	Armstrong TT-2000	Flanged	UBP32
52	Fan Room 01-123-0-Q	Armstrong TT-2000	Flanged	UFT32-4.5
61-a	Dry Stores 2nd Deck	Orifice Fryco	Flanged	UFT32-4.5
65	AC Flat 3-33-0-E	Armstrong 2011-70	Flanged	UFT32-4.5
89	Fan Room 03-84-2-Q	Armstrong TT-2000	Flanged	UBP32
92	Fan Room 03-84-2-Q	Armstrong 2011-70	Flanged	UFT32-4.5
93	Fan Room 03-84-2-Q	Armstrong TT-2000	Flanged	UFT32-4.5
108	Fan Room 03-65-1-Q	Armstrong TT-2000	Flanged	UFT32-4.5
110	Fan Room 03-65-1-Q	Armstrong TT-2000	Flanged	UBP32
139	Fan Room 1-108-2-Q	Armstrong 2011-70	Flanged	UFT32-4.5
209	Fan Room 02-59-1-Q	Armstrong TT-2000	Flanged	UBP32
224	State Room 03-40-0-L	Armstrong 880-80	Screwed	UFT32-4.5
264	Winch Room	Armstrong 2011-70	Screwed	UBP32
275	Generator Room 1	Armstrong TT-2000	Flanged	UFT32-4.5
276	Generator Room 1	Armstrong 2011-70	Flanged	UFT32-4.5
277	Generator Room 1	Armstrong 2011-70	Flanged	UFT32-4.5

WORK ITEM 36: Distilling Plant Condensate Dump Valves, Replace

1. SCOPE

1.1 Intent. This work item describes the requirements for the Contractor to replace three (3) existing 3-way condensate dump valves.

1.2 Government-furnished property.

MTI	ITEM DESCRIPTION	NSN/PN	QTY	ESTIMATED COST ($/UNIT)
N	ASCO 3-Way Solenoid Valve 3-Way Diverting, 1" 150# flanges, bronze body, seating PTFE, 115 VAC/60 Hz operation in a NEMA 4 enclosure	AV182430-1	3	20,000

2. REFERENCES

COAST GUARD DRAWINGS

Coast Guard Drawing 420-WAGB-531-001, REV F, Distilling plant system

Coast Guard Drawing 420-WAGB-535-001, REV M, Diagram steam, feed & condensate system

Coast Guard Drawing 420-WAGB-801-001, Rev K, Booklet of General Drawings

COAST GUARD PUBLICATIONS

Surface Forces Logistics Center Standard Specification 0000 (SFLC Std Spec 0000), 2022, General Requirements

Surface Forces Logistics Center Standard Specification 3042 (SFLC Std Spec 3042), 2022, Shipboard Electrical Cable Removal, Relocation, Splice, Repair, and Installation

Surface Forces Logistics Center Standard Specification 5000 (SFLC Std Spec 5000), 2022, Auxiliary Machine Systems

Surface Forces Logistics Center Standard Specification 6310 (SFLC Std Spec 6310), 2022, Requirements for Preservation of Ship Structures

OTHER REFERENCES

None

3. REQUIREMENTS

3.1 General.

3.1.1 CIR. The Contractor must submit a CIR for the inspections listed in the following paragraph(s):

Not applicable

3.1.2 Tech Rep.

Not applicable

3.1.3 Interferences. The Contractor must handle all interferences in accordance with SFLC Std Spec 0000, (Interferences). Known interferences include, but are not limited to the following:

- Piping
- Electrical wiring
- System fluid

NOTE

Coast Guard personnel will operate all shipboard machinery and equipment.

3.2 Operational test, initial. Prior to commencement of work, the Contractor must witness Coast Guard personnel perform an initial operational test of all items or shipboard devices to be disturbed, used, repaired, or altered, to demonstrate existing operational condition. Submit a CFR.

3.3 Replace 3-way valves. The Contractor must replace the existing 3-Way condensate dump valve Magnatrol P/N: TV3800. See figure 1. Contractor must install the GFE provided ASCO 3-Way Solenoid Valve Assemblies P/N: AV182430-1. See figure 2. Use new mounting hardware and gaskets. Renew one 3-way valve for each of the distillers and one3-way valve for the steam condensate.

3.4 Electrical work. The Contractor must accomplish all electrical work in accordance with SFLC Std Spec 3042, and test cables in accordance with SFLC Std Spec 3041. Utilize the existing wire ways for new cable runs as much as possible.

NOTE

The valve shall be constructed so that it must be repositioned manually to allow flow through the condenser or cooler and that it can be easily tripped manually to allow flow to bypass the condenser or cooler.

3.5 Leak test. After completing all authorized mechanical (i.e. threaded, bolted, etc.) joint repairs, the Contractor must test the system's operation using the system fluid at normal operating pressure. Ensure zero visible leakage from or deformation of mechanical parts by repairing all leaks and discrepancies. Submit a CFR.

NOTE

Coast Guard personnel will operate all shipboard machinery and equipment.

3.6 Operational test, post repairs. After completion of work, the Contractor must thoroughly test, in the presence of the Coast Guard Inspector and demonstrate all items or shipboard devices that have been disturbed, used, repaired, altered, or installed to be in satisfactory operating condition. Submit a CFR.

3.7 Touch-up preservation. The Contractor must prepare and coat all new and disturbed surfaces to match existing adjacent surfaces in accordance with SFLC Std Spec 6310, paragraph 3.1.13 (Touch-ups and minor coating repairs.)

4. NOTES

4.1 Figures.

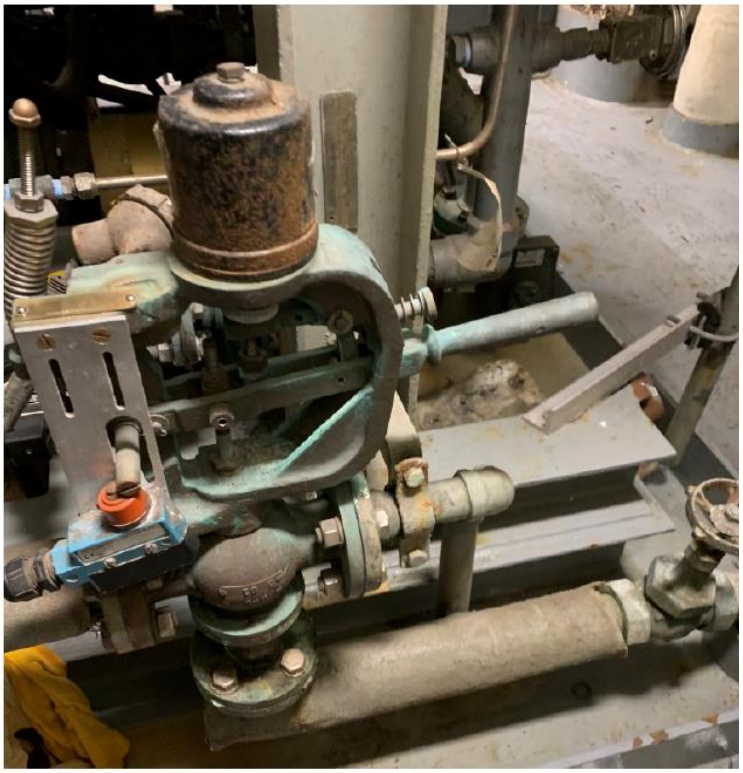

FIGURE 1- EXISTING 420-WAGB DISTILLING PLANT CONDENSATE DUMP VALVE

FIGURE 2- REPLACEMENT ASCO 3-WAY SOLENOID VALVE ASSEMBLY

Note for A-Team information.

The 420-WAGB Specification states that: "Condensate diversion valves - Three-way, solenoid operated, manual reset valves shall be provided downstream of seawater supplied vent condensers and condensate coolers. The valves shall be arranged for the condensate to bypass the coolers in the event of high salinity condensate. The salinity cell downstream of a cooler as well as the cell immediately downstream of the respective condensate tank shall be connected to trip the diversion valve in the event of high salinity or loss of power to a cell or the solenoid. The valve shall be designed to operate with a working pressure of at least 50 psi. The valve body and bonnet shall be constructed of valve bronze; ASTM B-61. Wetted trim parts shall be nickel-copper alloy (Monel); ASTM specifications B-127 and B-164 apply. Diversion valves in accordance with MIL-V-16556 which meet the requirements herein may be used."

WORK ITEM 37: Anchor Windlass, Inspect and Repair

1. SCOPE

1.1 Intent. This work item describes the requirements for the Contractor to perform a Level 2 inspection and repair of the port and starboard anchor windlasses.

1.2 Government-furnished property.

None

2. REFERENCES

COAST GUARD DRAWINGS

Coast Guard Drawing 420-WAGB-186-001, Rev B, Mooring and Towing Details

Coast Guard Drawing 420-WAGB-581-001, Rev -, Anchor Handling Arr and Details

Coast Guard Drawing 420-WAGB-581-501, Rev C, Series 274 Anchor Windlass

Coast Guard Drawing 420-WAGB-581-503, Rev C, Hydraulic Schematic Anchor Windlass

Coast Guard Drawing 420-WAGB-581-537, Rev A, Series 274 Anchor Windlass Drum Brake Linkage Assembly

Coast Guard Drawing 420-WAGB-581-538, Rev A, Series 274 Anchor Windlass Clutch Linkage Assembly

Coast Guard Drawing 420-WAGB-581-541, Rev C, Series 274 Anchor Windlass Main Drive Shaft Assembly

Coast Guard Drawing 420-WAGB-581-543, Rev B, Series 274 Anchor Windlass Drum Brake Assembly

Coast Guard Drawing 420-WAGB-581-544, Rev B, Series 274 Anchor Windlass Brake Band Assembly

Coast Guard Drawing 420-WAGB-581-545, Rev B, Series 274 Anchor Windlass Clutch Assembly

Coast Guard Drawing 420-WAGB-581-546, Rev B, Clutch Ring/Clutch Assembly

Coast Guard Drawing 420-WAGB-581-552, Rev B, Series 274 Anchor Windlass Lubrication Diagram

Coast Guard Drawing Fl-1702-11, Rev -, Inspection of Sheaves

COAST GUARD PUBLICATIONS

Coast Guard Technical Publication (TP) 5224, SWBS 581, Ju1 2018, Windlass, Anchor

Surface Forces Logistics Center Standard Specification 0000 (SFLC Std Spec 0000), 2022, General Requirements

Surface Forces Logistics Center Standard Specification 5000 (SFLC Std Spec 5000), 2022, Inspect, Repair, And Test Auxiliary Machine Systems

Surface Forces Logistics Center Standard Specification 6310 (SFLC Std Spec 6310), 2022, Requirements for Preservation of Ship Structures

OTHER REFERENCES

None

3. REQUIREMENTS

3.1 General.

3.1.1 CIR.

Not applicable

3.1.2 Tech Rep.

Not applicable.

3.1.3 Protective measures. The Contractor must furnish and install all protective measures in accordance with SFLC Std Spec 0000, paragraph 3.3.3 (Vessel component, space, and equipment protection).

3.1.3.1 Protection of fine surfaces. The Contractor must protect all fine surfaces in accordance with SFLC Std. Spec 5000.

3.1.3.2 Hydraulic system contamination protection. The Contractor must maintain existing hydraulic cleanliness in accordance with SFLC Std. Spec 5000.

NOTE

Be aware that plastic bags may be used only when arrangement or configuration prevents the use of the other sealing methods specified above.

3.1.4 Interferences. The Contractor must handle all interferences in accordance with SFLC Std Spec 0000, paragraph 3.3.5 (Interferences). Known interferences include, but are not limited to the following:

- Anchor
- Anchor Chain

NOTE
Coast Guard personnel will operate all shipboard machinery and equipment.

3.1.5 Rigging. The Contractor is responsible for all rigging with the following considerations:

3.1.5.1 All existing padeyes that will be used for a lift must be pull tested to 1.5 times their Working Load Limit in accordance with SFLC Standard Spec 5000 Paragraph 3.2.7. All testing must occur in the presence of a Coast Guard Inspector.

3.1.5.2. Upon completion of testing, install a label plate in accordance with SFLC Standard Spec 5000 Paragraph B2.9.

3.1.5.3. The anchor chain will need to be moved to facilitate this work. CG Dwg 420-WAGB-581-001 shows details of the anchor arrangement and alternate locations for pelican hooks (note the towing pads) to secure the anchor chain. The Contractor must submit a CFR explaining their management of the anchor chain and obtain approval from the COR prior to maneuvering the anchor chain.

3.2 Operational test, initial. Prior to commencement of work, the Contractor must witness Coast Guard personnel perform an initial operational test of all items or shipboard devices to be disturbed, used, repaired, or altered, to demonstrate existing operational condition. Submit a CFR. Testing must include, but not be limited to:

- Anchor windlass operational test in accordance with SFLC Std Spec 5000, B2.9

3.3 Inspection and repair. Utilize the references in Section 2 for disassembly/disassembly and lubrication information. For each anchor windlass, the Contractor must accomplish the following on both anchor windlasses:

TABLE 1 - MAINTENANCE

				ADDITIONAL REQUIREMENTS	
#	**TASK TYPE**	**QTY ***	**COMPONENT OR ASSEMBLY**	**APPENDIX AND PARA. FROM SFLC STD SPEC 5000**	**OTHER**
1	Operate and Inspect	1	Anchor Windlass Assembly	3.2.1 (Operate and inspect)	Submit CIR
2	Sample and Test	1	Hydraulic Fluid	C2.1.3	Submit CFR
3	Service and Inspect	1	Wildcat Shaft Assembly	3.2.2 (Service and inspect)	Submit CFR
4	Service and Inspect	1	Planetary Gear Box Assembly	3.2.2 (Service and inspect)	Submit CFR
5	Service and Inspect	1	Coupling Assembly	3.2.2 (Service and inspect)	Submit CFR
6	Disassemble and Inspect	1	Drum Brake Assembly	3.2.3 (Disassemble and inspect) & D2.3 (Brakes and clutches)	Submit CFR
7	Disassemble and Inspect	1	Band Brake Hand Wheel and Linkage Assembly	3.2.3 (Disassemble and inspect) & D2.3 (Brakes and clutches)	Submit CFR
8	Disassemble and Inspect	1	Hydraulic Brake Assembly	3.2.3 (Disassemble and inspect) & D2.3 (Brakes and clutches)	Submit CFR

				ADDITIONAL REQUIREMENTS	
#	TASK TYPE	QTY *	COMPONENT OR ASSEMBLY	APPENDIX AND PARA. FROM SFLC STD SPEC 5000	OTHER
9	Disassemble and Inspect	1	Clutch Mechanism	3.2.3 (Disassemble and inspect) & D2.3 (Brakes and clutches)	Submit CFR
10	Disassemble and Inspect	1	Hydraulic Motor	3.2.3 (Disassemble and inspect)	Submit CFR
11	Disassemble and Inspect	1	Hydraulic Pump	3.2.3 (Disassemble and inspect)	Submit CFR
12	Service and Inspect	1	Hydraulic Suction Strainer	3.2.2 (Service and Inspect)	Submit CFR
13	Renew	1	Counterbalance Valve	N/A	Renew counterbalance valve as shown in Figure 1
14	Service and Inspect	1	Control Stands	3.2.2 (Service and Inspect)	Submit CFR
15	NDE	1	Anchor Windlass Assembly Foundation	3.2.5 (NDE)	Weld joints to NDE: All joints attaching capstan foundations to deck.
16	Preserve	1	Anchor Windlass Assembly & Foundation	3.2.4 (Preservation)	Preservation to include all disturbed and previously painted component surfaces and foundations
17	Groom and Lubricate	1	Anchor Windlass Assembly	3.2.6 (Groom and lubrication)	
18	Label Plates	1	Anchor Windlass Assembly	B2.9	Figure B-1, SFLC Std Spec 5000

***Quantity is per each anchor windlass.**

3.4 Special requirements for various components. The Contractor must perform additional work on the components listed in Table 2 for each windlass.

TABLE 2 - SPECIAL REQUIREMENTS

COMPONENT	REFERENCE DOCUMENT
Electric Motors: Clean & Inspect AC Motor. Measure winding Insulation Resistance with a megger.	Page 8, Section 9 CG Tech Pub 5224 Submit CFR
Renew hydraulic supply and return filter elements.	See CG Dwg 420-WAGB-581-503

NOTE

Coast Guard personnel will operate all shipboard machinery and equipment.

3.5 Operational test, post repairs. After completion of work, the Contractor must thoroughly test, in the presence of the Coast Guard Inspector and demonstrate all items or shipboard devices that have been disturbed, used, repaired, altered, or installed to be in satisfactory operating condition. Submit a CFR. Testing must include, but not be limited to:

- Anchor windlass operational test in accordance with SFLC Std Spec 5000, B2.9

3.6 Touch-up preservation, general. The Contractor must prepare and coat all new and disturbed exterior and interior surfaces, as applicable, to match existing adjacent surfaces in accordance with SFLC Std Spec 6310, paragraph 3.1.13 (Touch-ups and minor coating repairs)

4. NOTES

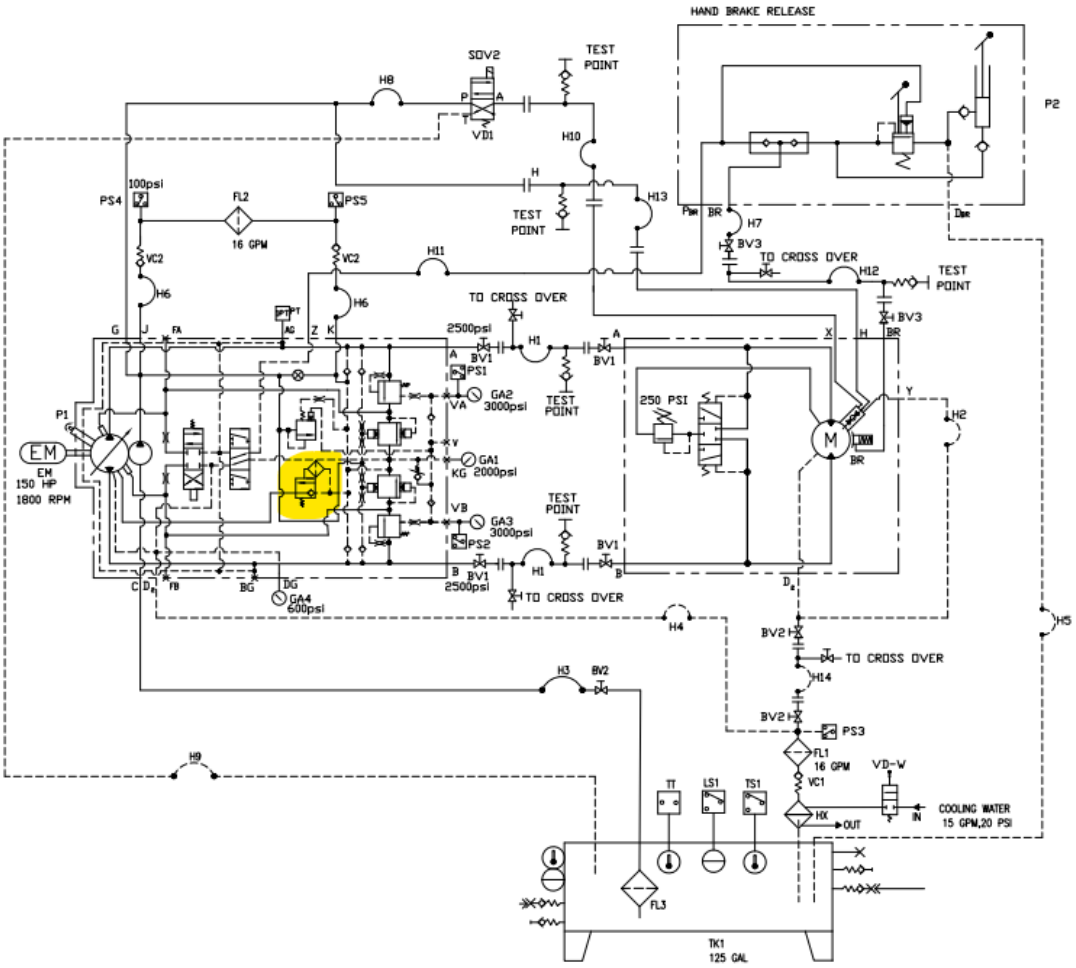

FIGURE 1. EXCERPT FROM 420-WAGB-581-503 HIGHLIGHTING THE COUNTERBALANCE VALVE.

WORK ITEM 38: Mooring Capstan, Level 2 Overhaul

1. SCOPE

1.1 Intent. This work item describes the requirements for the Contractor to test, inspect and overhaul Mooring Capstan listed on Table 1.

TABLE 1 – MOORING CAPSTAN

CAPSTAN	LOCATION
Starboard Stern Mooring Capstan	Stern Near Frame 152

1.2 Government-furnished property.

None.

2. REFERENCES

COAST GUARD DRAWINGS

Coast Guard Drawing 420-WAGB-185-003, Rev C, Series 353 Capstan and Mooring Winches FDNS

Coast Guard Drawing 420-WAGB-582-001, Rev E, Mooring, And Towing Arrangement

Coast Guard Drawing 420-WAGB-582-503, Rev -, Series 353 Capstan Block Diagram

Coast Guard Drawing 420-WAGB-582-504, Rev -, Series 353 Johnson type Capstan

Coast Guard Drawing 420-WAGB-582-554, Rev -, General arrangement Series 353 Capstan (no Master)

Coast Guard Drawing 420-WAGB-582-557, Rev A, Series 353 AFT Mooring Capstan Elementary Diagram

Coast Guard Drawing 420-WAGB-582-560, Rev -, Series 353 AFT Capstan Operator Console Assembly

COAST GUARD PUBLICATIONS

CG Tech Pub 5225; S9582-AW-MMC-010 - CAPSTAN, AFT WARPING – SERIES 353, 01 July 1997

Surface Forces Logistics Center Standard Specification 0000 (SFLC Std Spec 0000), 2022 General Requirements

Surface Forces Logistics Center Standard Specification 5000 (SFLC Std Spec 5000), 2022, Auxiliary Machine Systems

Surface Forces Logistics Center Standard Specification 6310 (SFLC Std Spec 6310), 2022, Requirements for Preservation of Ship Structures

OTHER REFERENCES

MIL-DTL-15024, Nov 1997, Plates, Tags and Bands for Identification of Equipment, General Specification for

Society of Automotive Engineers (SAE) J1942-1, 2008, Qualified Hoses for Marine Applications

3. REQUIREMENTS

3.1 General.

3.1.1 CIR.

None.

3.1.2 Tech Rep.

Not applicable.

3.1.3 Protective measures - general. The Contractor must furnish and install all protective coverings to seal off and protect all non-affected vessel's components, equipment, and spaces in the vicinity of the work area against contamination during the performance of work. Upon completion of work, the Contractor must remove all installed protective measures, inspect for the presence of contamination, and return all contaminated equipment, components, and spaces to original condition of cleanliness.

3.1.3.1 System cleanliness requirements. The Contractor must maintain existing system cleanliness; take all necessary precautions to prevent the introduction of contaminants into the piping system. Whenever disconnecting or removing components from the piping system, completely seal all openings to the rest of the system, immediately, using either caps (for externally threaded connection points), bolt-on blanks, or taped-on discs/covers (durable plastic or sheet-metal no less than 1/16-inch thick).

3.1.4 Interferences. The Contractor must handle all interferences in accordance with SFLC Std Spec 0000, paragraph 3.3.5 (Interferences).

- Wiring
- Deck Plating
- Piping
- Electrical cables
- Machinery

3.1.5 System fluid disposal. The Contractor must drain all existing fluids from the capstan components; dispose of removed fluids in accordance with all applicable Federal, state, and local regulations.

3.2 Inspection. For Capstan listed on Table 1, the Contractor must perform the inspection tasks listed in paragraph 4.2 of CG Tech Pub 5225.

3.2.1 Contractor must perform all tasks listed on Table 2 below. Refer to CG Tech Pub 5225; S9582-AW-

MMC-010, SFLC STD Spec 5000 and Coast Guard drawings referenced for arrangement details and technical guidance.

TABLE 2 REQUIREMENTS

				ADDITIONAL REQUIREMENTS	
#	**TASK TYPE (SFLC STD SPEC 5000 PARA. REF.)**	**QTY**	**COMPONENT OR ASSEMBLY**	**APPENDIX AND PARA. FROM SFLC STD SPEC 5000**	**OTHER**
1	Operate and Inspect	1	Capstan	3.2.1 (Operate and Inspect)	Submit CIR
2	Sample and Test	1	Hydraulic Fluid	C2.1.3	Submit CFR
3	Service and Inspect	1	Planetary Gear Box Assembly	3.2.2 (Service and inspect)	Submit CFR
4	Service and Inspect	1	Coupling Assembly	3.2.2 (Service and inspect)	Submit CFR
5	Service and Inspect	1	Hydraulic Brake Assembly	3.2.2 (Service and inspect) & D2.3 (Br akes and clutches)	Submit CFR
6	Service and Inspect	1	Hydraulic Pump	3.2.2 (Service and inspect)	Submit CFR
7	NDE	1	Capstan Foundations	3.2.5 (NDE)	Weld joints to NDE: All joints attaching capstan foundations to deck.
8	Groom and Lubricate	1	Planetary Gear box and Slewing Ring	3.2.6 (Groom and lubrication)	
9	Op Test	1	Capstan Assembly	B2.6 (Capstan)	Submit CFR
10	Label Plates	1	Capstan Assembly	B2.9	Figure B-1
11	Partially Preserve	1	Capstan Assembly	3.2.4.2 (Partially Preserve)	Perform surface preparation and preserve all Capstan external surfaces. Include one full cosmetic coat.
12	Operational Testing	1	Capstan Assembly	B2.6 Operational Testing	
13	Sample and Test	1	Gearbox Lube Oil	C2.1.3	Submit CFR

3.3 Flexible hoses. The Contractor must inspect the hydraulic hoses. Report damaged hoses or hoses with missing hose tags. Contractor must obtain approval from COR for hose renewals. Submit CFR with list of defective hoses. Report the following:

- Missing/illegible hose tags
- Leakage from hose or fittings
- Fitting discoloration

- Hose slipping out of end fittings
- Twisting, kinking, or distortion of hose
- Bulging, swelling, necking, or flattening sections exceeding 10% of the hose outside diameter
- Loose or delaminated cover
- Hose cover damaged by cuts, abrasions, cracking, or chafing, or if internal wires or fiber reinforcement is exposed
- Hose cover wrinkling exceeding 5% of hose outside diameter
- Blistering or hard spots.
- Paint on the hose cover in excess of 10% of total surface
- Physical damage to hose/connectors
- >10 years since installation date.

NOTE

Hydraulic hoses (flexible connections) service life is 12 years.

For continued service, the installed hoses must be free from damage or defects, and the hose tags must indicate <10 years since installation.

Hoses with missing/illegible hose tags must be renewed.

3.3.1 All hose fittings exposed to weather, must be protected with a layer of petro-tape or equivalent. The tape must be removed to allow visual inspection of the hose joint. After hose fitting inspections/hose renewal, the Contractor must apply petro-tape or equivalent to wrap all hose end fittings.

3.3.2 For Hoses requiring renewal, the Contractor must follow all the requirements of SFLC Std Spec 5000, Appendix C paragraph C2.2. through C2.2.1.5.

3.3.2.1 Prior to each hose disconnection, the Contractor must record equipment, supply, and return line information for use in later reconnection. Retain all removed hardware for reference during reinstallation. Cap (Plastic Cap, Metal Cap, Blank Flange with a Gasket) all open hydraulic lines immediately after breaking.

3.3.2.2 Renew hose end fittings, O-rings, two part clamps, and mounting bolts.

3.3.2.3 Remove and dispose of the old hoses and maintain existing system cleanliness.

3.3.4 Hose tags. The Contractor must provide new stamped or engraved metal hose tags with the following bulleted information, in accordance with SFLC Std Spec 5000, Figure C-1. Tag installation must be done in a manner that does not interfere with the normal hose flexing motion. Attach hose tags to their respective hose using metal strapping. Verify the tag can be slightly moved by hand, allowing the hose to expand and contract as designed while minimizing chaffing.

· Hose Log Item Number (Serial Number)

· Hydrostatic Test Pressure (psi)

· Hydrostatic Test Date (DD/MM/YY)

· Service Life (Replacement Date, 12 years following installation date) Date (QTR "Q"/FY)

3.3.5 Hose and fitting documentation. For each renewed hose assembly, the Contractor must submit the information listed below in Microsoft Excel format. A template for the information will be provided by the COR. Submit a CFR.

· Hose Number

· System

· Description (i.e. #1 A/C Inlet)

· Location (Compartment Number)

· Length (in.)

· Part No.

· Hose Material

· Size (in.)

· Fitting #1

· Fitting #2

· Design Pressure (psi)

· Hydrostatic Pressure (psi)3.4 Shipboard testing. The Contractor must perform an operational test in accordance with SFLC STD 5000, appendix B, Paragraph 2.6. The Contractor must thoroughly test, in the presence of the Coast Guard Inspector and demonstrate all items or shipboard devices that have been disturbed, used, repaired, altered, or installed to be in satisfactory operating condition. Submit a CFR.

3.4.1 Functional / No-load test. The Contractor must perform a no-load functional test on each capstan. Run each capstan without load at each rated speed for ten minutes in each direction to determine that no abnormal heat, vibration, wear or noise develops. Submit CFR.

3.4.2 Brake inspection. After completion of no-load functional test, the Contractor with Tech Rep must inspect the brake assembly for proper installation and submit a CFR.

3.4.3 Rated load test. This test verifies that the capstan can develop the specified line pull in both directions of rotation. The Contractor must perform this test by pulling against a dynamometer and

bitt. Use capstan to apply pull on the line until the dynamometer registers the required pull of 40,500 lbs at no specific speed without stalling the capstan.

3.5 Special requirements for various components. If a Change Request has been authorized for additional work on any of the components listed in Table 3 below, the Contractor must refer to the corresponding Appendix or paragraph of SFLC Std Spec 5000, as applicable:

TABLE 3 – SPECIAL REQUIREMENTS

COMPONENT	APPENDIX & PARAGRAPH IN SFLC STD SPEC 5000
Fluids	C2.1
Fastener assemblies	D2.1
Wire rope assemblies	D2.2
Brakes and Clutches	D2.3
Open gearing and gear reducers	D2.4

4. NOTES

4.1 The following basic ratings of the warping capstan assembly Almon Johnson type, series 353 are as follows:

40,500 lbs at no specific speed

WORK ITEM 39: Port & Starboard Miranda Davit, Biennial Inspect and Repair

1. SCOPE

1.1 Intent. This work item describes the requirements for the Contractor to inspect, test and perform biennial maintenance including partial preservation for the Port and STBD Miranda Davits.

1.2 Government-furnished property.

MTI	ITEM DESCRIPTION	NSN/PN	QTY	ESTIMATED COST ($/UNIT)
Y	SHEAVE, GALV W/CIP	B-4838	22 Ea.	1,700
Y	SPRING LOADED SHEAVE	D-13898	2 Ea.	16,000
N	KEEPER PLATE	C-8251-16	20	40
N	KEEPER PLATE	D-13898-21	20	20
N	PIN, WELDED	D-13898-6	20	800

***Government-loaned property, which must be returned to the vessel upon completion of the availability.**

2. REFERENCES

COAST GUARD DRAWINGS

Coast Guard Drawing FL-1702-11, Sheave Inspection

COAST GUARD PUBLICATIONS

Coast Guard Technical Publication 4668, MIRANDA DAVIT - MODEL MRT 3900 - Installation, operation and maintenance manual

Coast Guard Technical Publication LR-H5-0008-V1 DAVIT WINCH & HPU, RESCUE BOAT (RHIB) – TYPE MRT 3900-BH7800-961045-1 – VOLUME 1

Surface Forces Logistics Center Standard Specification 0000 (SFLC Std Spec 0000), 2022, General Requirements

Surface Forces Logistics Center Standard Specification 0740 (SFLC Std Spec 0740), 2022, Welding and Allied Processes

Surface Forces Logistics Center Standard Specification 5000 (SFLC Std Spec 5000), 2022, Auxiliary Machinery Systems

Surface Forces Logistics Center Standard Specification 6310 (SFLC Std Spec 6310), 2022, Requirements for Preservation of Ships Structures

OTHER REFERENCES

NAVSEA S9583-AR-MMC-010, VOL 1, Davit, Winch & HPU, Rescue Boat (RHIB)

3. REQUIREMENTS

3.1 General.

3.1.1 CIR. The Contractor must submit a CIR for the inspections listed in the following paragraph:

- 3.2. Operate and Inspect
- 3.3 Service and Inspect
- 3.5.2 Wire Rope Inspection

3.1.2 Technical Representatives.

3.1.2.1 The Contractor must provide the services of a certified OEM authorized/ licensed Tech Rep from Palfinger Marine to accomplish the following tasks on site:

- Provide manufacturer's proprietary information, software, and tools pertinent to the equipment/system.
- Assist with proper repair methods, and ensure compliance with manufacturer's procedures and standards during disassembly, inspection, repair, modification, calibration, and reassembly of the equipment/system.
- Provide technical support for final weight testing

3.1.2.1.1 The Technical Representative must be present for all critical phases of the work such as operational and load testing, disassembly and reassembly stages for removal, inspection, renewing or repairing, installing, testing and calibrating each davit's components.

3.1.2.2 Preservation Tech Rep. The Contractor must provide the services of Tech Rep as follows :

- Preservation Tech Rep : AMPP Senior Certified Coatings Inspector (NACE CIP Level 3/SSPC PCI Level 3) with Marine Coatings Inspection Specialty to
- Serve as an Independent Coating Tech Rep.
- Accomplish applicable requirements in SFLC Std Spec 0000, Paragraph 3.2.4.2.2 (Coating Tech Rep).

- Oversee the Preservation Plan requirements in SFLC Std Spec 6310, Paragraph 3.2 (Preservation plan).

- Review and sign daily reports summarizing work. See forms QA-1 thru QA-5 provided in the General Requirements.

- Submit reports to the COR within 24 hours of each inspection.

3.1.2.2.1 Qualifications/certifications. Submit the Coating Tech Rep's qualifications/certifications in accordance with SFLC Std Spec 0000, 3.2.4.2.2.3 and 3.2.4.2.4, include name, certificate number and documented completion of relevant AMPP (NACE/SSPC) Courses and Exams.
3.1.2.2.2 Submit the name and the certification of the Tech Rep to the COR at the Arrival Conference. Include the dates of services the Qualified Tech Reps will be on site as per their subcontract documentation.
3.1.3 Protective measures. The Contractor must furnish and install suitable covering to seal off and protect all non-affected surfaces/equipment and spaces in the vicinity of the work area against contamination during the performance of work. Upon completion of work, remove protective material and inspect for the presence of contamination. Clean all equipment and spaces, contaminated due to improper protection, to original condition of cleanliness.

3.1.4 Interferences. The Contractor must handle all interferences in accordance with SFLC Std Spec 0000, paragraph 3.3.5 (Interferences).

- Sleds must be removed for full preservation
- Operator Control Stand
- Hydraulic piping
- Staging required for access

3.1.5 Tools and Materials. The Contractor is responsible for providing all tools and materials including eight testing equipment like dynameter, and water bags.

3.1.6 Tenting. The Contractor must provide tenting and environmental controls per STD Spec 6310 paragraph 3.1.5.1 for preservation.
3.2 Operate and inspect. "Operate and Inspect" the entire system in accordance with paragraph 3.2.1 of SFLC Std Spec 5000. Submit **CIR**.

3.3 Service and Inspect. "Service and Inspect" the entire system in accordance with paragraph 3.2.2 of SFLC Std Spec 5000 and perform the weekly, six weekly and annually maintenance tasks as specified in CG Tech Pub 4668 Chapter 6. Ensure centrifugal Clutch/brakes are opened and inspected. Submit a **CIR** documenting results of all inspections and any recommended repairs.

3.3.1 Renew rollers. Contractor must replace the rollers on the Starboard davit to match the UHMW rollers on the Port side Davit.

3.3.2 Partial preservation. After removal of interferences, the Contractor must perform partial preservation of the boat davits and foundations. Partial preservation to include one (1) full cosmetic coat

over all painted surfaces. Follow the requirements of SFLC Std Spec 6310. Paragraph 3.1.13. and SFLC STD Spec 5000 Para 3.2.4. Partial preservation requires fresh water wash.

NOTE
Deck machinery equipment is considered critical-coated surfaces, as defined in SFLC Std Spec 6310.

3.3.2.1 In the presence of COR, identify the areas on davit assembly and foundations with signs of corrosion. for estimating purposes, the Contractor must expect that up to 33% of all surfaces will require coating removal to base metal.

3.3.2.2 On areas where damage from corrosion is observed, the Contractor must perform Visual (VT) and Magnetic (MT) testing in accordance SFLC Std Spec 0740. Include Pit and UT measurements at locations designated by COR. For estimating purposes, the Contractor must estimate 20 Pit measurements and 40 UT shots will be necessary. Submit CFR for inspection results and recommended repairs if necessary.

3.3.2.3 Ensure stripe coats (primer and first coat of paint) are applied to all edges, welds and irregular shapes.

3.3.3 Sled preservation. The Contractor must remove Port and Starboard sleds and transport them to contractor's facility for preservation. Perform full preservation of the sleds on both Port and Starboard davits. Follow the requirements of SFLC Std Spec 6310, Machinery Deck option II. Final coat to match adjacent surfaces. Reinstall sleds on cutter.

3.3.3.1 Ensure stripe coats (primer and first coat of paint) are applied to all edges, welds and irregular shapes.

3.3.4 Contractor must perform partial preservation of both davit frames. Follow the requirements of SFLC Std Spec 6310, Machinery Deck option II. Include one full coat to match adjacent surfaces.

3.3.5 Port side davit. The Contractor must renew hydraulic manifolds and load lock valves.

3.3.6 Contractor must renew Sheave/bearings on Port and Starboard davits.

3.3.6.1 Prior to installation of the new sheaves, the Contractor must remove OEM existing coating system and perform preservation full preservation of sheaves in accordance the requirements of SFLC Std Spec 6310, Machinery Deck option IV. Final coat (SPAR) to match adjacent surfaces. Do not apply paint to sheave groove.

3.3.6.2 The Contractor must apply inorganic Zinc at DFT 3-4 MILS to sheave groves.

3.3.7 After preservation work, the Contractor must renew UHMW pads (3 ea) on both Port and Starboard Davits. Use new stainless steel hardware, apply anti seize compound to threads.

3.3.8 Contractor must remove operator control stand cover. Hydraulic pipe needs to be disconnected to unbolt the cover. Blank flange piping. Contractor must remove the deck plate from control stand.

3.3.8.1 In presence of CG inspector visually inspect control stand, handrails and mounting location to deck for any cracks or deformation. Perform surface preparation NDE on exposed metal areas where damage from corrosion/cracks are evident and on all welds and handrails per STD Spec 0740. Contractor may use MT or PT Method. Submit CFR.

3.3.8.2 Preserve partial preservation for entire control stand and mounting location. Follow the requirements of SFLC Std Spec 6310, Machinery Deck option II. Include one full coat to match adjacent surfaces. Includes handrails, frame mounting to deck and control station.

3.3.9 Reinstall deck grating, console mounting and console cover. Use new stainless steel hardware and apply anti seize compound per STD Spec 5000 Appendix D para D.2.1.2.

3.3.10 Restore systems back to original condition. Renew valve on stainless tubing to control stand.

3.4 Groom and Lubricate. After completion of all maintenance and repair work groom and lubricate the entire system in accordance with paragraph 3.2.6 of SFLC Std Spec 5000 and Tech Pub Remove, clean, lubricate and reinstall all cradle rollers to ensure all roll freely during final weight test

3.5. Inspect and lubricate Wire Ropes. The Contractor must remove the existing fore, center, and aft falls and the center wire ropes. Reinstall wire ropes after inspection and lubrication.

3.5.1 Inspect entire length of wires for kinks, broken strands, corrosion, and any abnormal condition. Measure wire rope diameter in six or more places to determine if diameter has been reduced below the allowable limits as listed in Table 1 below. Submit **CIR** of inspection results and recommendations.

TABLE 1 - WIRE ROPE DIAMETER

NOMINAL ROPE DIAMETER	MAX ALLOWABLE DIAMETER REDUCTION
9/16" to 3/4"	3/64"

3.5.2 Pressure, I'll throw that in there, 3.5.2 Pressure lubricate the wire ropes with a cable lubricant in accordance with STD Spec 5000 Appendix D. The pressure lube system must include a groove cleaner and a scraper.

3.6 Flexible hoses. The Contractor must inspect the hydraulic hoses. Report damaged hoses or hoses with missing hose tags. Contractor must obtain approval from COR for hose renewals. Submit CFR with list of defective hoses. Report the following:

- Missing/illegible hose tags
- Leakage from hose or fittings
- Fitting discoloration
- Hose slipping out of end fittings
- Twisting, kinking, or distortion of hose
- Bulging, swelling, necking, or flattening sections exceeding 10% of the hose outside diameter

- Loose or delaminated cover
- Hose cover damaged by cuts, abrasions, cracking, or chafing, or if internal wires or fiber reinforcement is exposed
- Hose cover wrinkling exceeding 5% of hose outside diameter
- Blistering or hard spots.
- Paint on the hose cover in excess of 10% of total surface
- Physical damage to hose/connectors
- >10 years since hose installation date.

NOTE

Hydraulic hoses (flexible connections) service life is 12 years.

For continued service, the installed hoses must be free from damage or defects, and the hose tags must indicate <10 years since installation.

Hoses with missing/illegible hose tags must be renewed.

3.6.1 All hose fittings exposed to weather, must be protected with a layer of petro-tape or equivalent. The tape must be removed to allow visual inspection of the hose joint. After hose fitting inspections/hose renewal, the Contractor must apply petro-tape or equivalent to wrap all hose end fittings.

3.6.2 For Hoses requiring renewal, the Contractor must follow all the requirements of SFLC Std Spec 5000, Appendix C paragraph C2.2. through C2.2.1.5.

3.6.2.1 Prior to each hose disconnection, the Contractor must record equipment, supply, and return line information for use in later reconnection. Retain all removed hardware for reference during reinstallation. Cap (Plastic Cap, Metal Cap, Blank Flange with a Gasket) all open hydraulic lines immediately after breaking.

3.6.2.2 Renew hose end fittings, O-rings, two part clamps, and mounting bolts.

3.6.3 Remove and dispose of the old hoses and maintain existing system cleanliness.

3.6.4 Hose tags. The Contractor must provide new stamped or engraved metal hose tags with the following bulleted information, in accordance with SFLC Std Spec 5000, Figure C-1. Tag installation must be done in a manner that does not interfere with the normal hose flexing motion. Attach hose tags to their respective hose using metal strapping. Verify the tag can be slightly moved by hand, allowing the hose to expand and contract as designed while minimizing chaffing.

· Hose Log Item Number (Serial Number)

· Hydrostatic Test Pressure (psi)

· Hydrostatic Test Date (DD/MM/YY)

· Service Life (Replacement Date, 12 years following installation date) Date (QTR "Q"/FY)

3.6.5 Hose and fitting documentation. For each renewed hose assembly, the Contractor must submit the information listed below in Microsoft Excel format. A template for the information will be provided by the COR. Submit a CFR.

· Hose Number

· System

· Description (i.e. #1 A/C Inlet)

· Location (Compartment Number)

· Length (in.)

· Part No.

· Hose Material

· Size (in.)

· Fitting #1

· Fitting #2

· Design Pressure (psi)

· Hydrostatic Pressure (psi)

3.7 Final Operational and Weight Test. After completion of all other work, in the presence of the COR and the Tech Rep, the Contractor must perform a 10 minute static test and a 3 stop dynamic brake test with 110% of davit/winch SWL. Submit a CFR.

3.8 Label Plate. Fabricate and install a label plate indicating test loads and test date information for the system in accordance with paragraph B2.9 (Label plates) of appendix B of SFLC Std Spec 5000.

3.9 Touch-up preservation. The Contractor must prepare and coat all new and disturbed exterior and interior surfaces to match existing adjacent surfaces, in accordance with SFLC Std Spec 6310. Abide by all touch-up requirements outlined in SFLC Std Spec 6310, 3.1.13.

4. NOTES

This section is not applicable to this work item.

WORK ITEM 40: Aft Crane (Starboard), Biennial maintenance, Inspect and Repair

1. SCOPE

1.1 Intent. This work item describes the requirements for the Contractor to perform Biennial maintenance, perform partial preservation, inspect, repair and test one (1) Allied Systems Single Articulating Boom Crane, Model K40-55. The crane is located on the Aft Deck, STBD Side, S/N 1871.

1.2 Government-furnished property.

MTI	ITEM DESCRIPTION	NSN/PN	QTY	ESTIMATED COST ($/UNIT)
N	7/8" Sheave ssembly	240909	3	3,262
N	5/8" Sheaves Assembly	240912	1	2,624
N	Sheave Assembly	44575	1	597
N	Fast Winch Certified Hardware	240916	1	11,196
N	PIN WLDMT	44571	1	1,106

2. REFERENCES

COAST GUARD DRAWINGS

Coast Guard Drawing 420 WAGB 573-001, Rev B, Crane Pedestals Arr & Dets

Coast Guard Drawing 420 WAGB 573-002, Rev D, Boom Rests

Coast Guard Drawing 420 WAGB 573-511, Rev F, General Arrangement KB 15-45

Coast Guard Drawing FL-1702-11, Sheave Inspection

COAST GUARD PUBLICATIONS

Coast Guard Technical Publication (TP) 5244, July 2004, SG811-B5-MMC-010 – Single Articulating Boom Crane – Model K40-55

Surface Forces Logistics Center Standard Specification 0000 (SFLC Std Spec 0000), 2022, General Requirements

Surface Forces Logistics Center Standard Specification 0740 (SFLC Std Spec 0740), 2022, Welding and Allied Processes

Surface Forces Logistics Center Standard Specification 5000 (SFLC Std Spec 5000), 2022, Auxiliary Machinery Systems

Surface Forces Logistics Center Standard Specification 6310 (SFLC Std Spec 6310), 2022, Requirements for Preservation of Ship Structures

OTHER REFERENCES

Crane Smart V5 System Universal User manual 8/21/2023

3. REQUIREMENTS

3.1 General.

3.1.1 CIR. The Contractor must submit a CIR for the inspections listed in the following paragraph(s):

- 3.2 Operational test, initial.
- 3.2.1 Visual Inspection.
- 3.2.2 Operational tests.
- 3.3.1 Swing Drive Gears.
- 3.3.1.1 Oil Test Results
- 3.6 Measure Swing Bearing Wear.

3.1.2 Tech Reps.

3.1.2.1 The Contractor must provide the services of an OEM Authorized/licensed Tech Rep for the Allied K40-55 Crane to accomplish the following tasks on site:

- Provide manufacturer's proprietary system/equipment information, software and tools.
- Assist with and ensure compliance with manufacturer's procedures and standards during disassembly, inspection, repair, modification, calibration, and reassembly of the equipment/system.To be onsite for initial testing, groom/calibrate and final op/weight test
- Annual Crane Survey

3.1.2.1.1 The Contractor must submit the name of the Tech Rep to the COR at the Arrival Conference.

3.1.2.2 Preservation Tech Rep. The Contractor must provide the services of Tech Rep as follows :

- Preservation Tech Rep : AMPP Senior Certified Coatings Inspector (NACE CIP Level 3/SSPC PCI Level 3) with Marine Coatings Inspection Specialty to
- Serve as an Independent Coating Tech Rep.

- Accomplish applicable requirements in SFLC Std Spec 0000, Paragraph 3.2.4.2.2 (Coating Tech Rep).

- Oversee the Preservation Plan requirements in SFLC Std Spec 6310, Paragraph 3.2 (Preservation plan).

- Review and sign daily reports summarizing work. See forms QA-1 thru QA-5 provided in the General Requirements.

- Submit reports to the COR within 24 hours of each inspection.

3.1.2.2.1 Qualifications/certifications. Submit the Coating Tech Rep's qualifications/certifications in accordance with SFLC Std Spec 0000, 3.2.4.2.2.3 and 3.2.4.2.4, include name, certificate number and documented completion of relevant AMPP (NACE/SSPC) Courses and Exams.

3.1.2.2.2 Submit the name and the certification of the Tech Rep to the COR at the Arrival Conference. Include the dates of services the Qualified Tech Reps will be on site as per their subcontract documentation.

3.1.2.3 The Contractor must provide the services of an OEM Authorized/licensed Tech Rep for the Crane Smart Sytems to accomplish the following tasks on site:

- Initial operation Test
- Groom and Calibrate.
- Final Op test/weight test

3.1.2.3.1 The Contractor must submit the name of the Tech Rep to the COR at the Arrival Conference. Include the dates of services the Qualified Tech Reps will be on site as per their subcontract documentation.

3.1.3 Protective measures. The Contractor must furnish and install all protective measures in accordance with SFLC Std Spec 0000, paragraph 3.3.3 (Vessel component, space, and equipment protection).

3.1.4 Interferences. The Contractor must handle all interferences in accordance with SFLC Std Spec 0000, paragraph 3.3.5 (Interferences).

NOTE

Coast Guard personnel will operate all shipboard machinery and equipment.

3.2 Operational test, initial. Prior to commencement of work, the Contractor must witness Coast Guard personnel perform an initial operational test of all items or shipboard devices to be disturbed, used, repaired, or altered, to demonstrate existing operational condition. Submit a CIR documenting inspection, calibration and test results making any recommendations for repairs. CIR to Include:

- Swing bearing test
- Auxiliary winch test

3.2.1 Visual inspection. Visually inspect the crane per paragraph 3.2.1 of SFLC Std Spec 5000. Visual inspection to include removing covers to inspect crane cab and crane pedestal. Visually inspect Hydraulic

Power Unit during operation. Verify operation of all flood lights. Visually inspect all foundations welds for indications of cracks. Submit CIR

3.2.2 Operational tests. The Contractor must perform the following tests. Submit CIR.

No-load

Rated load test

Emergency lowering test

Local/remote and emergency stop tests

3.2.2.1 For LMI system calibration instructions utilize the Cranesmart LMI 5 Universal Manual at this link in section 5.2: https://cranesmart.com/support/resources.

3.3 Perform maintenance. The Contractor must perform all the maintenance tasks listed in Table 6-2 of CG TP 5244.

- Obtain oil samples for analysis
- Change winch drive oil
- Renew sheaves
- Change swing drive planetary gear reducer transmission fluid
- Complete Annual Crane Survey
- Calibrate LMI
- Hydraulic Power Unit (HPU) gear box

3.3.1 Swing Drive Gears. In the presence of the CG inspector, the Contractor must drain and dispose of the oil in each of the swing drive planetary gear reducer transmissions. Provide and install new oil in each planetary gear drive transmission. Follow guidance in TP 5244. Oil may be drained from the planetary gear drives and the gear drives may be refilled without removing the planetary gear drives from the crane using drain plugs on the bottom of the gear drives and vent plugs on the top. Inspect vent breather. Submit CIR.

3.3.1.1 Oil test results. As the oil is drained, collect one (1) sample from each planetary gear drive in accordance with paragraph C2.1.3.1 of SFLC Std Spec 5000. Label each sample. Inspect the oil for presence of water or other contamination. Send sample from each gear drive to a laboratory for wear metal particle analysis. Submit **CIR** with the results of the oil samples.

3.3.1.2 Refill each planetary gear drive housing with oil as described in TP 5244.

3.3.3 The Contractor must renew counterbalancing valve and manifold.

3.3.3 The Contractor must renew counterbalancing valve and manifold.

3.3.4. The Contractor must Contractor renew the (7) control panel operator switches which are currently seized. See CG TP 5244.

3.3.5 The Contractor renew broken HPU red lens assembly. See CG TP 5244.

3.3.6 Boom Rest Blocks. The contractor must remove existing wooden boom rest blocks. Provide new boom rest blocks fabricated out of Ultra High Molecular Weight (UHMW) plastic material. Contractor to ensure proper fit of new boom rests with crane in stowed position once installed. Install new boom rests blocks with stainless steel bolts, washers and locknuts per STD Spec 5000 appendix D, D2.1.2 . Washers to be installed on the bolt head and bolt thread ends once partial preservation is complete

3.3.6.1 Boom Rests Preservation. Remove existing blocks, padding and hardware. Partial Preserve entire assembly per STD SPEC 5000 Paragraph 3.2.4.3.3. Boom rests are classified as a Critically Coated Surface. Use STD SPEC 6310 Appendix A; Machinery, Deck coating system. Final coat color to match existing crane topcoat.

3.3.7 Load Winch. The Contractor must remove winch assembly from crane and sent to certified repair facility for disassembly, inspection, repairs, reassembly and testing per TP 5244. Submit CFR of inspection results and any recommended repairs if necessary.

3.3.7.1 . Renew sight glass, breather, drain/fill plug and shuttle valve.

3.3.7.2 Preserve winch assembly in accordance with STD Spec 5000 3.2.4 and STD Spec 6310, Appendix A, Machinery Deck, Option II. Winch assembly is considered a critically coated surface, submit QA forms required in STD Spec 6310 Appendix E. Winch drum working surface must be coated with Inorganic Zinc per STD Spec 5000 para 3.2.4.5.3. Surface must be SSPC-SP10 for coating. Winch drum is considered a critically coated surface, submit QA forms required in STD Spec 6310 Appendix E.

3.3.7.3 The Contractor must renew the Load Winch mounting Certified Cap screws, Certified Hex Nuts and washers item #27, #28 and #38 of TP 5244, Chapter 10, Figure10-29 and Table 10-29. Provide Cap screw and Nut Certification forms to COR via CFR.

3.3.7.4 Renew all tie plate hardware per TP 5244 and OEM.

3.3.7.5 Once repairs and bench test complete reinstall main winch to crane with new mounting hardware. Torque to specifications per TP 5244 Chapter 6. Perform touch up preservation on hardware once torqued in accordance with SFLC Std Spec 6310. Abide by all touch-up requirements outlined para 3.1.13.

3.3.8 Fast Winch. The Contractor must remove winch assembly from crane and send to certified repair facility for disassembly, inspection, repairs, reassembly and testing per TP 5244. Submit CFR of inspection results and any recommended repairs if necessary.

3.3.8.1 Renew sight glass, breather, drain/fill plug and shuttle valve.

3.3.8.2 Preserve winch assembly in accordance with STD Spec 5000 3.2.4 and STD Spec 6310, Appendix A, Machinery Deck, Option II Winch assembly is considered a critically coated surface, submit QA forms required in STD Spec 6310 Appendix E. Winch drum working surface shall be coated with inorganic

Zinc per STD Spec 5000 para 3.2.4.5.3. Surface must be SSPC-SP10 for coating. Winch drum is considered a critically coated surface, submit QA forms required in STD Spec 6310 Appendix E.

3.3.8.3 The Contractor must renew the Fast Winch mounting Certified Cap screws, Certified Hex Nuts and washers item #44, #45 and #46 of TP 5244, Chapter 10, Figure10-29 and Table 10-29. Provide Cap screw and Nut Certification forms to COR via CFR.

3.3.8.4 Once repairs and bench test complete reinstall fast winch to crane with new mounting hardware. Torque to specifications per TP 5244 Chapter 6. Touch up preserve hardware once torqued in accordance with SFLC Std Spec 6310. Abide by all touch-up requirements outlined para 3.1.13.

3.3.9 Main Boom and Jib Boom. The Contractor remove main and jib boom from crane per CG TP 5244 and OEM guidance.

3.3.9,1 The OEM Tech Rep and Certified NDE Inspector must conduct visual inspection of main and jib booms once removed. NDE via MT or PT methods per STD Spec 0740 areas of the boom as suggested by OEM. Submit inspection results vis CFR and any recommended repairs if necessary.

3.3.9.2 . Visually Inspect and NDE via PT method per STD Spec 0740 the main boom and jib boom certified Trunnion capscrews. NDE to be performed by certified NDE Inspector. Submit CFR of NDE results and recommended repairs if necessary.

3.3.9.3 . Visually Inspect and NDE via PT or MT method per STD Spec 0740the main boom and jib boom trunnion and trunnion caps. NDE to be performed by certified NDE Inspector. Submit CFR of NDE results and recommended repairs if necessary.

3.3.9.4 . Inspect bearing caps and bushings of TP 5244 Chapter 10 Figure 10-2 Detail A and Detail C and Table 10-2 with OEM guidance. Renew all parts associated parts as designated by OEM.

3.3.9.5 Once all repairs made and preserved reinstall main and jib boom back on crane per TP and OEM guidance. Renew trunnion washers and torque trunnion capscrews per TP 5244 and OEM guidance. Once torqued Touch up preserve hardware once torqued in accordance with SFLC Std Spec 6310. Abide by all touch-up requirements outlined para 3.1.13.

3.3.10 Cylinders. The Contractor must remove boom and jib cylinders from the crane per CG TP 5244 and transport to certified facility for disassembly, inspection, repairs, reassembly and testing.3.3.10.1 In the presence of CG Inspector visually inspect cylinder mounting locations on crane for and cracks and deformations. NDT mounting location welds via MT method per STD Spec 0740. Submit CFR of inspection results and recommended repairs if necessary.

3.3.10.2 Disassemble and inspect the cylinders per STD Spec 5000 paragraph 3.2.3 and TP 5244. Submit CFR of inspection results and any recommended repairs.

3.3.10.3 Renew all cylinder counterbalance valves per OEM and TP 5244 guidance.

3.3.10.4 Renew boom cylinder manifolds and needle valve per OEM and TP 5244 guidance. OEM to set needle valve pressure during final optest.

3.3.10.5 Renew jib boom cylinder manifolds per OEM and TP 5244 guidance.

3.3.10.6 Hard chrome all cylinder piston rods in accordance with OEM requirements.

3.3.10.7 The Contractor must reassemble all cylinders per TP 5244 section 10 and Figure 10-9. Contractor to provide parts item numbers 7 through 17 listed in Figure 10-9 needed for reassembly.

3.3.10.8 Conduct pressure and operational test. Submit CFR of test results.

3.3.10.9 Preserve cylinders prior to installation on crane per STD Spec 5000 para 3.2.4 and STD Spec 6310 . Including packing gland and hardware.

3.3.10.10 Re-install all cylinders in accordance with TP 5244.

3.3.11. Sheaves. The Contractor must remove the manufacturer's coating material IAW 6310.

3.3.11.1 Perform full preservation of sheaves in accordance the requirements of SFLC Std Spec 6310, Machinery Deck option IV. Final coat (SPAR) to match adjacent surfaces. Do not apply paint to sheave groove. Preserve surfaces except for the sheave groove, in accordance with STD Spec 5000 and 6310. Top coat to be Spar.

3.3.11.2 Sheave groove to be coated with Inorganic Zinc at DFT 3-4 MILS per STD Spec 5000 paragraph 3.2.4.5.

3.3.11.3 After preservation is complete, the Contractor must install the GFE boom sheave assemblies and bearings. Follow CG TP 5244 and OEM guidance.

3.4 Service and Inspect. Service and inspect the entire system in accordance with paragraph 3.2.2 of SFLC Std Spec 5000 and TP 5244 Chapter 6. Submit a CFR documenting results of all inspections and any recommended repairs.

3.5 Bolts and Fasteners. The Contractor must follow paragraph 6.5.6.1 TP 5244 to check crucial bolts and fasteners. Submit CFR.

3.6 Measure Swing Bearing Wear. The Contractor must follow paragraph 6.5.6.2 TP 5244 to measure the swing bearing wear. Submit CIR.

3.7 Crane Partial Preservation. The Contractor must perform surface preparation and partial preservation for up to 33% of the crane's s painted surfaces. Partial preservation must include one additional finish coat over 100% of the crane painted surfaces. Follow the requirements of SFLC Std Spec 6310 and SFLC STD Spec 5000 Para 3.2.4. Contractor must remove the components listed below to perform preservation and NDE, Include preservation of:

- Pedestal vent trunks and covers
- Cab window frames
- Cab Interior and exterior
- Ladder
- Control Panel
- Platform access cover
- Extension assembly handrails

3.7.1 Quality assurances and controls. The Contractor must abide by all the safety, preservation, and quality control requirements specified in SFLC Std Spec 0000, Paragraph 3.2.4.2 (In-process QC measures for "critical-coated surfaces"), and the quality controls specified in SFLC Std Spec 6310, Paragraph 3.1.10 (Coating inspection) and 3.1.15 (Coating system tests).

3.7.2 Pre-surface preparation wash. The Contractor must accomplish low-pressure (less than 5,000 psi) fresh water wash of all affected surfaces, to remove soluble chlorides and other surface contaminants. Refer to SSPC-SP 1, for guidance.

3.7.2.1 When fresh water wash is not possible or practical, remove surface contaminants by one or a combination of solvent cleaning methods in accordance with SSPC-SP 1.

3.7.2.2 After removal of interferences, in the presence of COR, identify the areas on davit assembly and foundations with signs of corrosion. for estimating purposes, the Contractor must expect that up to 33% of all surfaces will require coating removal to base metal.

3.7.2.3 On areas where damage from corrosion is observed and with concurrence from COR coatings inspector, the Contractor must perform VT, UT and MT in accordance SFLC Std Spec 0740. For estimating purposes, the Contractor must estimate 40 UT measurements and 20 MT locations will be necessary. Submit CFR.

3.7.2.4 Ensure stripe coats (primer and first coat of paint) are applied to all edges, welds and irregular shapes.

3.7.2.5 After removal of all rust and loose paint, the Contractor must feather in the new coats of primer and paint to match existing coating system.

3.7.3 Vent Covers. Contractor must remove the two vent covers from the pedestal vent trunks. Remove all hardware and dogging latches from pedestal. Remove existing gasket.

3.7.3.1 Preserve vent covers per STD Spec 5000 para 3.2.4 STD Spec 6310 and Appendix A, Machinery Deck, Option II.

3.7.3.2 After surface preparation, in the presence of CG Inspector, inspect covers for any cracks or deformation. Inspect mounting locations and welds for any defects. Submit CFR of inspection results and any recommended repairs if necessary.

3.7.3.3 After preservation is completed, The Contractor must reinstall the vent covers. Use a new gasket, stainless-steel hardware and stainless-steel dogging latches per STD Spec 5000 appendix D, D2.1.2

3.7.4 Cab Windows. The Contractor must remove all cab windows to perform preservation. After preservation is completed reinstall the windows at original locations. Renew window seals per OEM requirements and SFLC TP 5246.

3.7.4.1 After reinstallation of all windows the Contractor must perform a tightness test on all windows by spraying water on the windows from a water hose (5/8" ID, 30 psi minimum) for 5 minutes each. Submit CFR.

3.7.5 Cab interior preserve. The Contractor must remove the four 4 floor plates. Handle all interferences per STD Spec 0000. Perform full Preservation of floor plates per STD Spec 6310 and Appendix B, Deck Plates, Deckplates, Steel. Coat entire floor plates with Inorganic Zinc.

3.7.5.1 Perform partial preservation of mounting locations and surrounding area of cab floor per STD Spec 5000 and STD Spec 6310.

3.7.5.2 Reinstall floor plates with new stainless-steel hardware per STD Spec 5000 appendix D, D2.1.2

3.7.6 Platform Access Cover partial preserve. The Contractor must remove side access cover to crane control block. Perform partial preservation on cover and mounting location per STD Spec 5000 para 3.2.4.

3.7.6.1 Fabricate gasket out of impregnated rubber and glue to access cover. Gasket thickness should allow cover to sit flush when installed.3.7.6.2 Upon partial preservation completion, install access cover and gasket with new stainless steel washers and bolts per STD Spec 5000 appendix D, D2.1.2.

3.8 Groom and Lubricate. Perform a thorough groom and lubricate in accordance with SFLC Std Spec 5000, 3.2.6. Use low temperature grease. See paragraph 6.5.4.4 and 6.5.4.5 of CG Tech Pub 5244.

3.9 Lubricate Wire Rope. The Contractor must pressure lubricate the wire rope in accordance with the "Lubricate Wire Rope" section of Chapter 6 in TP 5244 and Paragraph D 2.2.1. of SFLC Std Spec 5000.

3.10 Label Plate. Install a label plate for the system in accordance with paragraph B2.9 (Label plates) of appendix B of SFLC Std Spec 5000.

3.11 Final test. After completion of all other work, in the presence of the Coast Guard Inspector and the Technical Representative the Contractor must conduct a No-load Operational Test followed by a winch brake/modified static, Dynamic and Rated Weight Test per Table 1 in accordance with SFLC Std Spec 5000 Appendix B, paragraph B2.4. Submit CFR of test results.

TABLE 1 – WEIGHT TEST

MAIN HOIST TEST WEIGHTS	
Winch Brake/Modified Static	41,800lbs
Dynamic	41,800 lbs
Rated	38,000 lbs
AUX HOIST TEST WEIGHTS	
Winch Brake/Modified Static	7,400 lbs
Dynamic	7,400 lbs
Rated	6,720 lbs.

3.12 Visual inspection. After load testing of weight handling equipment, a visual inspection on all load bearing parts, strength welds and any repaired areas must be made. If any cracking or deformation is sighted, or suspect, paint must be removed from the suspect area, and an NDT inspector must perform magnetic particle testing in accordance with Std Spec 0740. Submit a CFR with the results of the inspection.

3.13 Touch-up preservation. The Contractor must prepare and coat all new and disturbed exterior and interior surfaces to match existing adjacent surfaces, in accordance SFLC Std Spec 6310, 3.1.13.

4. NOTES

This section is not applicable to this work item.

WORK ITEM 41: Aft Articulating Crane (Port), Annual maintenance, Inspect and Repair

1. SCOPE

1.1 Intent. This work item describes the requirements for the Contractor to perform annual maintenance, inspect,test and perform partial preservation to one (1) Allied Systems Single Articulating Boom Crane, Model Model K15-45. The crane is located on the Aft Deck, Port Side, S/N 1867.

1.2 Government-furnished property.
None.

2. REFERENCES

COAST GUARD DRAWINGS

Coast Guard Drawing 420 WAGB 573-001, Rev B, Crane Pedestals Arr & Dets

Coast Guard Drawing 420 WAGB 573-002, Rev D, Boom Rests

Coast Guard Drawing 420 WAGB 573-511, Rev F, General Arrangement KB 15-45

Coast Guard Drawing FL-1702-11, Sheave Inspection

COAST GUARD PUBLICATIONS

Coast Guard Technical Publication (TP) 5246 July 2004, SG811-B5-MMC-010 – Single Articulating Boom Crane – Model K15-45, s/n 1867 -

Coast Guard Technical Publication (TP) 5336, 2007, The Cranesmart "Lmi" System

Surface Forces Logistics Center Standard Specification 0000 (SFLC Std Spec 0000), 2022, General Requirements

Surface Forces Logistics Center Standard Specification 0740 (SFLC Std Spec 0740), 2022, Welding and Allied Processes

Surface Forces Logistics Center Standard Specification 5000 (SFLC Std Spec 5000), 2022, Auxiliary Machinery Systems

Surface Forces Logistics Center Standard Specification 6310 (SFLC Std Spec 6310), 2022, Requirements for Preservation of Ship Structures

OTHER REFERENCES

Crane Smart V5 System Universal User manual 8/21/2023

3. REQUIREMENTS

3.1 General.

3.1.1 CIR. The Contractor must submit a CIR for the inspections listed in the following paragraph(s):

- 3.2 Operational test, initial
- 3.3 Swing Drive Gears
- 3.3.1.1 Drain and test oil
- 3.4 Main Winch Housing
- 3.6 Measure Swing Bearing Wear.

3.1.2 Tech Reps.

3.1.2.1 The Contractor must provide the services of an OEM Authorized/licensed Tech Rep for the Allied K15-45 Crane to accomplish the following tasks on site:

- Provide manufacturer's proprietary system/equipment information, software and tools.
- Assist with and ensure compliance with manufacturer's procedures and standards during disassembly, inspection, repair, modification, calibration, and reassembly of the equipment/system.
- Oversee no-load operational test and load testing
- Annual Crane Survey

3.1.2.1 The Contractor must submit the name of the Tech Rep to the COR at the Arrival Conference.

3.1.2.2 Preservation Tech Rep. The Contractor must provide the services of Tech Rep as follows :

- Preservation Tech Rep : AMPP Senior Certified Coatings Inspector (NACE CIP Level 3/SSPC PCI Level 3) with Marine Coatings Inspection Specialty to
- Serve as an Independent Coating Tech Rep.
- Accomplish applicable requirements in SFLC Std Spec 0000, Paragraph 3.2.4.2.2 (Coating Tech Rep).
- Oversee the Preservation Plan requirements in SFLC Std Spec 6310, Paragraph 3.2 (Preservation plan).
- Review and sign daily reports summarizing work. See forms QA-1 thru QA-5 provided in the General Requirements.
- Submit reports to the COR within 24 hours of each inspection.

3.1.2.2.1 Qualifications/certifications. Submit the Coating Tech Rep's qualifications/certifications in accordance with SFLC Std Spec 0000, 3.2.4.2.2.3 and 3.2.4.2.4, include name, certificate number and documented completion of relevant AMPP (NACE/SSPC) Courses and Exams.

3.1.2.2.2 Submit the name and the certification of the Tech Rep to the COR at the Arrival Conference. Include the dates of services the Qualified Tech Reps will be on site as per their subcontract documentation.

3.1.2.3 The Contractor must provide the services of an OEM Authorized/licensed Tech Rep for the Crane Smart Sytems to accomplish the following tasks on site:

- Initial operation Test
- Groom and Calibrate.
- Final Op test/weight test

3.1.2.3.1 The Contractor must submit the name of the Tech Rep to the COR at the Arrival Conference. Include the dates of services the Qualified Tech Reps will be on site as per their subcontract documentation.

3.1.3 Protective measures. The Contractor must furnish and install all protective measures in accordance with SFLC Std Spec 0000, paragraph 3.3.3 (Vessel component, space, and equipment protection).

3.1.4 Interferences. The Contractor must handle all interferences in accordance with SFLC Std Spec 0000, paragraph 3.3.5 (Interferences).

NOTE

Coast Guard personnel will operate all shipboard machinery and equipment.

3.2 Operational test, initial. Prior to commencement of work, the Contractor must witness Coast Guard personnel perform an initial operational test of all items or shipboard devices to be disturbed, used, repaired, or altered, to demonstrate existing operational condition. Submit a CIR documenting inspection, calibration and test results making any recommendations for repairs.

3.2.1 Visually inspect the crane per paragraph 3.2.1 of SFLC Std Spec 5000. Visual inspection to include removing covers to inspect crane cab and crane pedestal. Visually inspect Hydraulic Power Unit during operation. Verify operation of all flood lights. Visually inspect all foundations welds for indications of cracks. Submit CFR.

3.3 Perform Annual maintenance. The Contractor must perform all the maintenance tasks listed in Table 6-2 of CG TP 5246. For LMI system calibration instructions utilize the Cranesmart LMI 5 Universal Manual at this link in section 5.2: https://cranesmart.com/support/resources.

- Obtain oil samples for analysis
- Change winch drive oil
- Inspect sheaves
- Change swing drive planetary gear reducer transmission fluid
- Complete Annual Crane Survey
- Calibrate LMI

3.3.1 Swing Drive Gears. Drain and dispose of the oil in each of the swing drive planetary gear reducer transmissions. Provide and install new oil in each planetary gear drive transmission. Follow guidance in TP 5246. Oil may be drained from the planetary gear drives and the gear drives may be refilled without removing the planetary gear drives from the crane using drain plugs on the bottom of the gear drives and vent plugs on the top.

3.3.1.1 Drain and test oil. As the oil is drained, collect one (1) sample from each planetary gear drive in accordance with paragraph C2.1.3.1 of SFLC Std Spec 5000. Label each sample. Inspect the oil for presence of water or other contamination. Send sample from each gear drive to a laboratory for wear metal particle analysis. Submit **CIR** with the results of the oil samples.

3.3.1.2 Refill each planetary gear drive housing with oil as described in TP 5246.

3.3.3 The Contractor must renew the Emergency Lowering Load lock valve

3.3.4 Remove winch assembly from crane. Save and store in a safe location for reinstall after preservation.2. Sheaves. The Contractor must remove the manufacturer's coating material IAW 6310.

3.35 Perform full preservation of sheaves in accordance the requirements of SFLC Std Spec 6310, Machinery Deck option IV. Final coat (SPAR) to match adjacent surfaces. Do not apply paint to sheave groove. Preserve surfaces except for the sheave groove, in accordance with STD Spec 5000 and 6310. Top coat to be Spar.

3.3.6 Sheave groove to be coated with Inorganic Zinc per STD Spec 5000 para 3.2.4.5.3

3.3.7 After preservation is complete, the Contractor must install the GFE boom sheave assemblies and bearings. Follow CG TP 5246 and OEM guidance.

3.4 Service and Inspect. Service and inspect the entire system in accordance with paragraph 3.2.2 of SFLC Std Spec 5000 and TP 5246 Chapter 6. Submit a CFR documenting results of all inspections and any recommended repairs.

3.5 Bolts and Fasteners. The Contractor must follow paragraph 6.5.6.1 TP 5246 to check crucial bolts and fasteners. Submit CFR.

3.6 Measure Swing Bearing Wear. The Contractor must follow paragraph 6.5.6.2 TP 5246 to measure the swing bearing wear. Submit CIR

3.7 Crane Partial Preservation. The Contractor must submit preservation plan to COR for approval. Perform surface preparation and partial preservation for up to 33% of the crane's s painted surfaces. Partial preservation must include one additional finish coat over 100% of the crane painted surfaces. Follow the requirements of SFLC Std Spec 6310 and SFLC STD Spec 5000 Para 3.2.4. Include preservation of:

- Winch assembly including mounting location on boom.
- Pedestal vent trunks and covers
- Cab window frames

- Cab exterior and interior
- Extension assembly, deck grates and handrails
- Ladder
- Side access cover to crane control block and mounting location
- Hydraulic cylinder band locations

3.7.1 Quality assurances and controls. The Contractor must abide by all the safety, preservation, and quality control requirements specified in SFLC Std Spec 0000, Paragraph 3.2.4.2 (In-process QC measures for "critical-coated surfaces"), and the quality controls specified in SFLC Std Spec 6310, Paragraph 3.1.10 (Coating inspection) and 3.1.15 (Coating system tests).

3.7.2 Pre-surface preparation wash. The Contractor must accomplish low-pressure (less than 5,000 psi) fresh water wash of all affected surfaces, to remove soluble chlorides and other surface contaminants. Refer to SSPC-SP 1, for guidance.
3.7.2.1 When fresh water wash is not possible or practical, remove surface contaminants by one or a combination of solvent cleaning methods in accordance with SSPC-SP 1.
3.7.2.2 In the presence of COR, identify the areas on crane assembly and foundations with signs of corrosion. for estimating purposes, the Contractor must expect that up to 33% of all surfaces will require coating removal to base metal.

3.7.2.3 On areas where damage from corrosion is observed and with concurrence from COR coatings inspector, the Contractor must perform MT in accordance SFLC Std Spec 0740, of welds and bare metal areas of the main and jib boom. Submit CFR of inspection results and any recommended repairs if necessary.

3.7.2.4 Ensure stripe coats (primer and first coat of paint) are applied to all edges, welds and irregular shapes.

3.7.2.5 After removal of all rust and loose paint, the Contractor must feather in the new coats of primer and paint to match existing coating system.

3.7.2.6 Contractor must remove all cab windows to perform preservation. After preservation is completed reinstall the windows at original locations. Renew window seals per OEM requirements and SFLC TP 5246.

3.7.2.7 After reinstallation of all windows the Contractor must perform a tightness test on all windows by spraying water on the windows from a water hose (5/8" ID, 30 psi minimum) for 5 minutes each. Submit CFR.

3.7.2.8 Upon partial preservation completion, install access cover. Install new gasket with new stainless steel hardware per SFLC Std spec 5000 Appendix D, D2.1.2.

3.7.2.9. Reassemble handrails to extension assembly with new hardware per TP 5246 and STD Spec 5000 Appendix D, D2.1.2.

3.7.2.10. Reinstall to crane cab once preservation is complete of mounting surface to cab with new hardware per STD Spec 5000 appendix D, D2.1.2

3.7.2.11 Touch up preserve hardware once installed in accordance with SFLC Std Spec 6310. Abide by all touch-up requirements outlined in para 3.1.13.

3.7.3 Ladder. Contractor must remove ladder.

3.7.3.1 In the presence of CG Inspector after coating system is removed, visually inspect ladder for cracks and deformations. NDE all welds and deformations with the MT method per STD Spec 0740. NDE to be conducted by certified NDE Inspector. Submit CFR of inspections results and recommend repairs if necessary.

3.7.3.2. Preserve ladder per STD Spec 5000 and STD Spec 6310 and Appendix A, Machinery Deck, Option II.

3.7.3.3 Partial preserve ladder mounting locations to crane per STD Spec 5000. In the presence of CG Inspector inspect mounting locations for cracks and deformations. NDT all welds and deformations with the MT method per STD Spec 0740. NDE to be conducted by certified NDE inspector. Submit CFR of inspections results and recommend repairs if necessary.

3.7.3.4 Reinstall ladder once mounting locations are preserved with new hardware per TP 5244 and per STD Spec 5000 appendix D, D2.1.2

3.7.3.5 Touch up preserve hardware once installed in accordance with SFLC Std Spec 6310. Abide by all touch-up requirements outlined para 3.1.13.3.8 Boom Angle Indicator. The Contractor must remove seized Boom Angle Pointer and repair to proper operation.

3.8.1 Preserve Indicator per STD Spec 6310 Appendix A, Machinery, Deck. Top coat to be black.

3.9 Boom Rests: The contractor must the remove existing wooden boom rest blocks. Purchase and fabricate new boom rest blocks fabricated out of Ultra High Molecular Weight (UHMW) plastic material. Contractor to ensure proper fit of new boom rests with crane in stowed position once installed. Install new boom rests blocks with stainless steel bolts, washers and locknuts per STD Spec 5000 appendix D, D2.1.2 . Washers to be installed on the bolt head and bolt thread ends once partial preservation is complete

3.9.1 Boom Rests Preservation. Remove existing blocks, padding and hardware. Partial Preserve entire assembly per STD SPEC 5000 Paragraph 3.2.4.3.3. Boom rests are classified as a Critically Coated Surface. Use STD SPEC 6310 Appendix A; Machinery, Deck coating system. Final coat color to match existing crane topcoat.

3.10 <u>Winch</u>. The Contractor must remove winch assembly from crane. Prior to reinstallation, the Contractor must perform partial preservation to mounting location on boom.

3.10.1 In the presence of CG Inspector and Certified NDT Inspector, inspect mounting plate on boom and motor side plates of winch. Conduct NDE via MT per STD Spec 0740 Appendix C. Submit CFR of inspection results and recommended repairs if needed.

3.10.2 Renew sight glass, breather, drain/fill plug and shuttle valve. Perform partial preservation entire winch assembly. Include full top coat.

3.10.3 Renew winch mounting capscrews, nuts and washers item #33, #34 and #35 of TP 5246, Chapter 10, Figure 10-25 and Table 10-25. Touch up preserve hardware once torqued in accordance with SFLC Std Spec 6310. Abide by all touch-up requirements outlined para 3.1.13.

3.10.4 Renew motor side plate capscrews and washers item #11 and #12 of TP 5246, Chapter 10, Figure 10-26 and Table 10-26. Touch up preserve hardware once torqued in accordance with SFLC Std Spec 6310. Abide by all touch-up requirements outlined para 3.1.13

3.10.5 Reinstall winch to crane with new mounting hardware and torque to specifications per TP 5246 Chapter 6. Touch up preserve hardware once torqued in accordance with SFLC Std Spec 6310. Abide by all touch-up requirements outlined para 3.1.13.

3.11 Cylinders. The Contractor must Renew items #9, 21, 24, 25, 26, 28 of TP 5246, Chapter 10, Figure 10-20 and Table 10-20 and Figure 10-18 and Table 10-18. Preserve bands prior to reinstallation.

3.11.1 Perform partial preservation at cylinder band location.

3.11.2 Reinstall cylinders and perform touch up preservation of hardware in accordance with SFLC Std Spec 6310. Abide by all touch-up requirements outlined para 3.1.13.

3.12 Emergency Stop. The Contractor must renew existing seized and corroded E-Stop located on the pedestal and replace with in kind.

3.13 Control Valve Foundation. The Contractor must repair cracked control valve block foundation per OEM guidance.

3.13.1 . Submit repair plan to COR for review and approval.

3.14. Operating Console. The Contractor must troubleshoot and repair operation of all switches and controls as indicated by OEM inspection report.

3.14.1 Repair per OEM guidance. Submit CFR of repair results.

3.15 Boom Light. The Contractor must renew existing corroded light mount swivel assembly from crane.

3.15.1 Per OEM, current boom lighting system is obsolete. Contractor must provide and install new lighting assembly and components to mount to crane per OEM guidance. Provide new technical publication info of lighting system COR via CFR for CG to update Technical Publications.

3.15.2 After installation, perform operational test of lighting system to demonstrate to COR that it is fully operational.

3.15.3 Perform touch up preservation of hardware in accordance with SFLC Std Spec 6310. Abide by all touch-up requirements outlined para 3.1.13.

3.16 Groom and Lubricate. Perform a thorough groom and lubricate in accordance with SFLC Std Spec 5000, 3.2.6. Use low temperature grease. See paragraph 6.5.4.4 and 6.5.4.5 of CG Tech Pub 5246.

3.17 Lubricate Wire Rope. The Contractor must pressure lubricate the wire rope in accordance with the "Lubricate Wire Rope" section of Chapter 6 in TP 5246 and Paragraph D 2.2.1. of SFLC Std Spec 5000.

3.18 Label Plate. Install a label plate for the system in accordance with paragraph B2.9 (Label plates) of appendix B of SFLC Std Spec 5000.

3.19 Final test. After completion of all other work, in the presence of the Coast Guard Inspector and the Technical Representative the Contractor must conduct a No-load Operational Test followed by a winch brake/modified static, Dynamic and Rated Weight Test per Table 1 in accordance with SFLC Std Spec 5000 Appendix B, paragraph B2.4. Submit CFR of test results.

TABLE 1 – WEIGHT TEST

MAIN HOIST TEST WEIGHTS	
Winch Brake/Modified Static	16,800 lbs
Dynamic	11,200 lbs
Rated	11,200 lbs

3.20 Visual inspection. After load testing of weight handling equipment, a visual inspection on all load bearing parts, strength welds and any repaired areas must be made. If any cracking or deformation is sighted, or suspect, paint must be removed from the suspect area, and an NDT inspector must perform magnetic particle testing in accordance with Std Spec 0740. Submit a CFR with the results of the inspection.

3.21 Touch-up preservation. The Contractor must prepare and coat all new and disturbed exterior and interior surfaces to match existing adjacent surfaces, in accordance SFLC Std Spec 6310, 3.1.13. include preservation of hardware.

4. NOTES

This section is not applicable to this work item.

WORK ITEM 42: Deck Crane (Starboard), TB 100-55, Annual maintenance, Inspect and Repair

1. SCOPE

1.1 Intent. This work item describes the requirements for the Contractor to perform annual maintenance, partial preservation, inspect and test one (1) Allied Systems Telescoping Boom crane model - TB100-55, SN 1870

1.2 Government-furnished property.

MTI	ITEM DESCRIPTION	NSN/PN	QTY	ESTIMATED COST ($/UNIT)
N	Sheave Assy	240909	3 ea	3,262
N	Sheave Assy	240910	2 ea	12,552
N	Pin, Certified WLDMT	42865	4 ea	1,777

2. REFERENCES

COAST GUARD DRAWINGS

Coast Guard Drawing 420 WAGB 573-001, Rev B, Crane Pedestals Arr & Dets

Coast Guard Drawing 420 WAGB 573-002, Rev D, Boom Rests

Coast Guard Drawing 420 WAGB 573-511, Rev F, General Arrangement KB 15-45

Coast Guard Drawing FL-1702-11, Sheave Inspection

COAST GUARD PUBLICATIONS

Coast Guard Technical Publication (TP) 5245, 2022, SG811-C5-MMC-010 - Crane, Primary Telescoping Boom Pedestal Type – Model 100-55

Coast Guard Technical Publication (TP) 5336, 2007, The Cranesmart "Lmi" System

Surface Forces Logistics Center Standard Specification 0000 (SFLC Std Spec 0000), 2022, General Requirements

Surface Forces Logistics Center Standard Specification 0740 (SFLC Std Spec 0740), 2022, Welding and Allied Processes

Surface Forces Logistics Center Standard Specification 5000 (SFLC Std Spec 5000), 2022, Auxiliary Machinery Systems

Surface Forces Logistics Center Standard Specification 6310 (SFLC Std Spec 6310), 2022, Requirements for Preservation of Ship Structures Other References

Crane Smart V5 System Universal User manual 8/21/2023

3. REQUIREMENTS

3.1 General.

3.1.1 CIR. The Contractor must submit a CIR for the inspections listed in the following paragraph(s):

- 3.2 Operational test, initial
- 3.3.3.1 Swing Drive Gears oil analysis
- 3.4 Main Winch Housing
- 3.6 Measure Swing Bearing Wear.

3.1.2 Tech Reps. The Contractor must provide the services of Tech Reps and personnels as follows:

3.1.2.1 The Contractor must provide the services of an OEM Authorized/licensed Tech Rep for the Allied TB100-55 Crane to accomplish the following tasks on site:

- Provide manufacturer's proprietary system/equipment information, software and tools.
- Assist with and ensure compliance with manufacturer's procedures and standards during disassembly, inspection, repair, modification, calibration, and reassembly of the equipment/system.
- Oversee no-load operational test and load testing
- Annual Crane Survey

3.1.2.1.1 The Contractor must submit the name of the Tech Rep to the COR at the Arrival Conference

3.1.2.2 Preservation Tech Rep. The Contractor must provide the services of Preservation Tech Rep AMPP Senior Certified Coatings Inspector (NACE CIP Level 3/SSPC PCI Level 3) with Marine Coatings Inspection Specialty to perform the following duties:

- Serve as an Independent Coating Tech Rep.
- Accomplish applicable requirements in SFLC Std Spec 0000, Paragraph 3.2.4.2.2 (Coating Tech Rep).
- Oversee the Preservation Plan requirements in SFLC Std Spec 6310, Paragraph 3.2 (Preservation plan).
- Review and sign daily reports summarizing work. See forms QA-1 thru QA-5 provided in the General Requirements.

- Submit reports to the COR within 24 hours of each inspection.

3.1.2.2.1 Qualifications/certifications. Submit the Coating Tech Rep's qualifications/certifications in accordance with SFLC Std Spec 0000, 3.2.4.2.2.3 and 3.2.4.2.4, include name, certificate number and documented completion of relevant AMPP (NACE/SSPC) Courses and Exams.

3.1.2.2.2 Submit the name and the certification of the Tech Rep to the COR at the Arrival Conference. Include the dates of services the Qualified Tech Reps will be on site as per their subcontract documentation.

3.1.2.3 The Contractor must provide the services of an OEM Authorized/licensed Tech Rep for the Crane Smart Sytems to accomplish the following tasks on site:

- Initial operation Test
- Groom and Calibrate.
- Final Op test/weight test

3.1.2.3.1 The Contractor must submit the name of the Tech Rep to the COR at the Arrival Conference. Include the dates of services the Qualified Tech Reps will be on site as per their subcontract documentation.

3.1.3 Protective measures. The Contractor must furnish and install all protective measures in accordance with SFLC Std Spec 0000, paragraph 3.3.3 (Vessel component, space, and equipment protection).

- Do not apply paint to wiring, hydraulic hoses and non-coated components and equipment

3.1.4 Interferences. The Contractor must handle all interferences in accordance with SFLC Std Spec 0000, paragraph 3.3.5 (Interferences).

- Cab
- Windows
- Platform Access cover
- Handrails
- Ladder

NOTE
Coast Guard personnel will operate all shipboard machinery and equipment.

3.2 Operational test, initial. Prior to commencement of work, the Contractor must witness Coast Guard personnel perform an initial operational test of all items or shipboard devices to be disturbed, used, repaired, or altered, to demonstrate existing operational condition. Submit a CIR documenting inspection, calibration and test results making any recommendations for repairs. Perform the following tests:

- No load test followed by rated test
- Emergency Lowering System
- Local/Remote starts and e-stops.

3.2.1 Visually inspect the crane per paragraph 3.2.1 of SFLC Std Spec 5000. Visual inspection to include removing covers to inspect crane cab and crane pedestal. Visually inspect Hydraulic Power Unit during operation. Verify operation of all flood lights. Visually inspect all foundations welds for indications of cracks.

3.3 Perform Annual maintenance. The Contractor must perform all the maintenance tasks listed in Table 6-2 of CG TP 5245. For LMI system calibration instructions utilize the Cranesmart LMI 5 Universal Manual at this link in section 5.2: https://cranesmart.com/support/resources.

- Obtain oil samples for analysis
- Change winch drive oil
- Inspect sheaves
- Renew 10 turret bearing-Pedestal bolts
- Renew HPU Gear Box Oil
- Change swing drive planetary gear reducer transmission fluid
- Complete Annual Crane Survey
- Calibrate LMI

3.3.1 Swing Drive Gears. Drain and dispose of the oil in each of the swing drive planetary gear reducer transmissions. Provide and install new oil in each planetary gear drive transmission. Follow guidance in TP 5245. Oil may be drained from the planetary gear drives and the gear drives may be refilled without removing the planetary gear drives from the crane using drain plugs on the bottom of the gear drives and vent plugs on the top.

3.3.1.2 As the oil is drained, collect one (1) sample from each planetary gear drive in accordance with paragraph C2.1.3.1 of SFLC Std Spec 5000. Label each sample. Inspect the oil for presence of water or other contamination. Send sample from each gear drive to a laboratory for wear metal particle analysis.

3.3.1.3 Submit **CIR** with the results of the oil samples.

3.3.1.4 Refill each planetary gear drive housing with oil as described in TP 5245.

3.3.2 Main Winch Housings and aux winch. Renew oil in main winch and aux winch. As the oil is drained, collect one (1) sample from each planetary gear drive in accordance with paragraph C2.1.3.1 of SFLC Std Spec 5000. Label each sample. Inspect the oil for presence of water or other contamination. Send sample from each gear drive to a laboratory for wear metal particle analysis. Submit a **CIR** with the oil results.

3.3.3 Remove and renew boom system cylinder needle valve per TP 5245 and OEM Guidance. OEM Tech Rep to adjust correct pressure setting during final op testing.

3.3.4 In the presence of CG Inspector visually inspect cylinder mounting locations on crane for and cracks and deformations. NDT mounting location welds via MT method per STD Spec 0740. Submit CFR of inspection results and recommend repairs if necessary.

3.3.5 Contractor must install all GFE boom sheave assemblies and bearings per TP 5245 and OEM guidance. Preserve sheave surfaces except for the sheave groove, in accordance with STD Spec 5000 and 6310. Top coat to be Spar. Sheave groove to be coated with Inorganic Zinc per STD Spec 5000 para 3.2.4.5.3

3.3.6 Boom tip spacer guides 4 each. The Contractor must remove and renew four boom tip sheave spacer guides per OEM guidance. Preserve spacer guides with inorganic zinc per STD Spec 5000 para 3.2.4.5.3. After preservation work, reinstall with new stainless steel hardware per OEM guidance.

3.3.7 Boom Top Roller and cage. The Contractor must remove wire roller and cage from top of boom.

3.3.7.1 Visually inspect mounting tabs and cage for cracks and deformation. NDE mounting welds per STD Spec 0740 MT Method. Submit NDE results via CFR.

3.3.7.2 Preserve roller with inorganic zinc per STD Spec 5000 para 3.2.4.5.3

3.3.7.3 Preserve cage per STD Spec 5000 and STD Spec 6310 and Appendix A, Machinery Deck, Option II.

3.3.7.4 Reinstall to boom once mounting location has been preserved with new stainless steel hardware.

3.3.8 Hook Block. The Contractor must disassemble and inspect main hook block. Submit CFR of inspection results and recommended repairs.

3.3.8.1 Contractor install new GFE hook block sheave assembly per TP 5245.

3.3.8.2 Preserve sheave groove surfaces except for the sheave groove, in accordance with STD Spec 5000 and 6310. Top coat to be yellow.

3.3.8.3 Sheave groove to be coated with Inorganic Zinc per STD Spec 5000 para 3.2.4.5.3

3.3.8.4 Partial preserve hook block assembly per STD Spec 5000 and STD Spec 6310. Topcoat to be yellow.

3.3.8.5 Once partial preservation is completed the Contactor must reassemble main hook block, follow OEM guidance.

3.3.8.6 The Contractor must adjust fleet angle of hook block and main wire rope during final operational testing per OEM guidance. Correct fleet angle to be approved by OEM prior to final weight testing.

3.3.9 <u>Boom</u>. The Contractor must remove and replace all existing extension boom wear pads per CG TP 5245 and OEM Guidance. Perform partial preservation of location of wear pad covers prior to reinstallation.

3.3.9.1 Reinstall new extension boom wear pads with new hardware and adjust to realign extension boom per OEM guidance.

NOTE

OEM inspection report states extension boom out of alignment. 3.3.10 Boom Rest Blocks. The contractor must remove existing wooden boom rest blocks. Provide new boom rest blocks fabricated out of Ultra High Molecular Weight (UHMW) plastic material. Contractor to ensure proper fit of new boom rests with crane in stowed position once installed. Install new boom rests blocks with stainless steel bolts, washers and locknuts per STD Spec 5000 appendix D, D2.1.2 . Washers to be installed on the bolt head and bolt thread ends once partial preservation is complete

3.3.10.1 Boom Rests Preservation. Remove existing blocks, padding and hardware. Partial Preserve entire assembly per STD SPEC 5000 Paragraph 3.2.4.3.3. Boom rests are classified as a Critically Coated Surface. Use STD SPEC 6310 Appendix A; Machinery, Deck coating system. Final coat color to match existing crane topcoat.

3.3.11 Boom Tip Flood Light. The Contractor must open the light housing. open and inspect the boom tip flood light. renew bulb. Clean out any debris and water on the inside of the light lens. remove existing lens cover gasket and install with new lens cover gasket. Reassemble lens cover to flood light housing.

3.3.11.1 In the presence of CG Inspector the Contractor must perform a water integrity test by spraying flood light housing with fresh water. Use fresh water from a 5/8" ID hose at 30 psi minimum. Open housing and determine if there waste water intrusion. If water intrusion is present continue to troubleshoot/repair until there is no more water intrusion.

3.3.12 Bracket. The Contractor must renew the boom tip flood light housing bracket. Unbolt and remove floodlights from bracket. Flood lights can be secured to the crane without unwiring. Unbolt bracket from bracket weldment per TP 5245.

3.3.12.1 The Contractor must fabricate new bracket out of stainless steel material. Bracket to be of same design and dimensions as existing bracket.

3.3.12.2 Install new bracket to the bracket weldment with stainless steel hardware. Reinstall floodlight to new bracket. Once reassembled ensure flood light moves freely.

3.3.13 Swivel. The Contractor must remove frozen swivel bar from boom and repair swivel bar to operating condition. Preserve swivel bar. Reinstall to boom. Verify that swivel bar swivels with light attached during crane movement.

3.4 Service and Inspect. Service and inspect the entire system in accordance with paragraph 3.2.2 of SFLC Std Spec 5000 and TP 5245 Chapter 6. Submit a CFR documenting results of all inspections and any recommended repairs.

3.5 Bolts and Fasteners. The Contractor must renew 10 turret bearing-pedestal bolts.

3.5.1 follow paragraph 6.5.6.1 TP 5245 to check crucial bolts and fasteners Submit CFR.

The Contractor must follow paragraph 6.5.6.2 TP 5245 to measure the swing bearing wear. Submit CIR.

3.7 Crane Partial Preservation. The Contractor must perform surface preparation and partial preservation for up to 33% of the crane's s painted surfaces. Partial preservation must include one additional finish coat over 100% of the crane painted surfaces. Follow the requirements of SFLC Std Spec 6310 and SFLC STD Spec 5000 Para 3.2.4. Crane will have to be extended to conduct partial preservation of extension boom.. Contractor must submit preservation plan for preservation for Tech Rep and COR approval. Include preservation of:

- Cab exterior and Interior, include window frames
- Extension assembly, deck grates and handrails
- Hydraulic cylinder band locations
- Ladder
- Pedestal vent trunks and covers
- Side access cover to crane control block and mounting location
- Winch assembly including mounting location on boom.

3.7.1 Quality assurances and controls. The Contractor must abide by all the safety, preservation, and quality control requirements specified in SFLC Std Spec 0000, Paragraph 3.2.4.2 (In-process QC measures for "critical-coated surfaces"), and the quality controls specified in SFLC Std Spec 6310, Paragraph 3.1.10 (Coating inspection) and 3.1.15 (Coating system tests).

3.7.2 Pre-surface preparation wash. The Contractor must accomplish low-pressure (less than 5,000 psi) fresh water wash of all affected surfaces, to remove soluble chlorides and other surface contaminants. Refer to SSPC-SP 1, for guidance.
3.7.2.1 When fresh water wash is not possible or practical, remove surface contaminants by one or a combination of solvent cleaning methods in accordance with SSPC-SP 1.
3.7.2.2 In the presence of COR, identify the areas on davit assembly and foundations with signs of corrosion. for estimating purposes, the Contractor must expect that up to 33% of all surfaces will require coating removal to base metal.

3.7.2.3 In the presence of CG Inspector and Certified NDT Inspector, inspect all welds and areas requiring substrate preparation to bare metal for cracks and deformities. Conduct NDE via MT per STD Spec 0740 Appendix C of welds and bare metal areas of the main and jib boom. Submit CFR of inspection results and recommended repairs if necessary.

3.7.2.4 Ensure stripe coats (primer and first coat of paint) are applied to all edges, welds and irregular shapes.

3.7.2.5 After removal of all rust and loose paint, the Contractor must feather in the new coats of primer and paint to match existing coating system.

3.7.2.6 Contractor must remove all cab windows to perform preservation. After preservation is completed reinstall the windows at original locations. Renew window seals and hardware per OEM requirements and SFLC TP 5246. Perform touch up preservation of window hardware.

3.7.2.7 After reinstallation of all windows the Contractor must perform a tightness test on all windows by spraying water on the windows from a water hose (5/8" ID, 30 psi minimum) for 5 minutes each. Submit CFR.

3.7.2.8 Upon partial preservation completion, install access cover. Install new gasket with new stainless steel hardware per SFLC Std spec 5000 Appendix D, D2.1.2.

3.7.2.9 The Contractor must provide and install missing window defroster. Demonstrate proper operation of window defroster to COR.

3.7.3 . Sheaves. The Contractor must remove the manufacturer's coating material IAW 6310.

3.7.3.1 Perform full preservation of sheaves in accordance the requirements of SFLC Std Spec 6310, Machinery Deck option IV. Final coat (SPAR) to match adjacent surfaces. Do not apply paint to sheave groove. Preserve surfaces except for the sheave groove, in accordance with STD Spec 5000 and 6310. Top coat to be Spar.

3.7.3.2 Sheave groove to be coated with Inorganic Zinc per STD Spec 5000 para 3.2.4.5.33.8 Flexible hoses. The Contractor must inspect the hydraulic hoses. Report damaged hoses or hoses with missing hose tags. Contractor must obtain approval from COR for hose renewals. Submit CFR with list of defective hoses. Report the following:

- Missing/illegible hose tags
- Leakage from hose or fittings
- Fitting discoloration
- Hose slipping out of end fittings
- Twisting, kinking, or distortion of hose
- Bulging, swelling, necking, or flattening sections exceeding 10% of the hose outside diameter
- Loose or delaminated cover
- Hose cover damaged by cuts, abrasions, cracking, or chafing, or if internal wires or fiber reinforcement is exposed
- Hose cover wrinkling exceeding 5% of hose outside diameter
- Blistering or hard spots.
- Paint on the hose cover in excess of 10% of total surface
- Physical damage to hose/connectors
- >10 years since hose installation date.

NOTE

Hydraulic hoses (flexible connections) service life is 12 years.

For continued service, the installed hoses must be free from damage or defects, and the hose tags must indicate <10 years since installation.

Hoses with missing/illegible hose tags must be renewed.

3.8.1 All hose fittings exposed to weather, must be protected with a layer of petro-tape or equivalent. The tape must be removed to allow visual inspection of the hose joint. After hose fitting inspections/hose renewal, the Contractor must apply petro-tape or equivalent to wrap all hose end fittings.

3.8.2 For Hoses requiring renewal, the Contractor must follow all the requirements of SFLC Std Spec 5000, Appendix C paragraph C2.2. through C2.2.1.5.

3.8.2.1 Prior to each hose disconnection, the Contractor must record equipment, supply, and return line information for use in later reconnection. Retain all removed hardware for reference during reinstallation. Cap (Plastic Cap, Metal Cap, Blank Flange with a Gasket) all open hydraulic lines immediately after breaking.

3.8.2.2 Renew hose end fittings, O-rings, two part clamps, and mounting bolts.

3.8.3 Remove and dispose of the old hoses and maintain existing system cleanliness.3.8.5 Hose tags. The Contractor must provide new stamped or engraved metal hose tags with the following bulleted information, in accordance with SFLC Std Spec 5000, Figure C-1. Tag installation must be done in a manner that does not interfere with the normal hose flexing motion. Attach hose tags to their respective hose using metal strapping. Verify the tag can be slightly moved by hand, allowing the hose to expand and contract as designed while minimizing chaffing.

· Hose Log Item Number (Serial Number)

· Hydrostatic Test Pressure (psi)

· Hydrostatic Test Date (DD/MM/YY)

· Service Life (Replacement Date, 12 years following installation date) Date (QTR "Q"/FY)

3.8.4 Hose fitting documentation. For each renewed hose assembly, the Contractor must submit the information listed below in Microsoft Excel format. A template for the information will be provided by the COR. Submit a CFR.

· Hose Number

· System

· Description (i.e. #1 A/C Inlet)

· Location (Compartment Number)

· Length (in.)

· Part No.

· Hose Material

· Size (in.)

· Fitting #1

· Fitting #2

· Design Pressure (psi)

· Hydrostatic Pressure (psi)

3.9 Groom and Lubricate. Perform a thorough groom and lubricate in accordance with SFLC Std Spec 5000, 3.2.6. Use low temperature grease. See paragraph 6.5.4.4 and 6.5.4.5 of CG Tech Pub 5245.

3.10 Wire Rope. The Contractor Renew main wire rope. IAW CG TP 5245 and OEM guidance. Submit wire rope certification documents to COR via CFR.

3.10.1Pressure lubricate the wire rope in accordance with the "Lubricate Wire Rope" section of Chapter 6 in TP 5245 and Paragraph D 2.2.1. of SFLC Std Spec 5000.

3.11 Label Plate. Install a label plate for the system in accordance with paragraph B2.9 (Label plates) of appendix B of SFLC Std Spec 5000.

3.12 Final test. After completion of all other work, in the presence of the Coast Guard Inspector and the Technical Representative the Contractor must conduct a No-load Operational Test followed by a winch brake/modified static, Dynamic and Rated Weight Test per Table 1 and 2 in accordance with SFLC Std Spec 5000 Appendix B, paragraph B2.4. Submit CFR of test results.

TABLE 1 – WEIGHT TEST

Main Hoist Test Weights	
Winch Brake/Modified Static	41,800 lbs
Dynamic	41,800 lbs
Rated	38,000 lbs

TABLE 2 – WEIGHT TEST

AUX HOIST TEST WEIGHTS	
Winch Brake/Modified Static	7,400 lbs
Dynamic	7,400 lbs
Rated	6,720 lbs

3.13 Visual inspection. After load testing of weight handling equipment, a visual inspection on all load bearing parts, strength welds and any repaired areas must be made. If any cracking or deformation is sighted, or suspect, paint must be removed from the suspect area, and an NDT inspector must perform magnetic particle testing in accordance with Std Spec 0740. Submit a CFR with the results of the inspection.

3.14 Touch-up preservation. The Contractor must prepare and coat all new and disturbed exterior and interior surfaces to match existing adjacent surfaces, in accordance SFLC Std Spec 6310, 3.1.13.

4. NOTES

This section is not applicable to this work item.

WORK ITEM 43: Deck Crane (Port), TB 100-55, Bi-Annual maintenance, Inspect and Repair

1. SCOPE

1.1 Intent. This work item describes the requirements for the Contractor to perform Bi-annual maintenance, inspect and test one (1) Allied Systems Telescoping Boom crane model - TB100-55, S/N 1869

1.2 Government-furnished property.

MTI	ITEM DESCRIPTION	NSN/PN	QTY	ESTIMATED COST ($/UNIT)
N	Sheave Assy	240909	3 ea	3,262
N	Sheave Assy	240910	2 ea	12,552
N	Pin, Certified WLDMT	42865	4 ea	1,777

2. REFERENCES

COAST GUARD DRAWINGS

Coast Guard Drawing 420 WAGB 573-001, Rev B, Crane Pedestals Arr & Dets

Coast Guard Drawing 420 WAGB 573-002, Rev D, Boom Rests

Coast Guard Drawing 420 WAGB 573-511, Rev F, General Arrangement KB 15-45

Coast Guard Drawing FL-1702-11, Sheave Inspection

COAST GUARD PUBLICATIONS

Coast Guard Technical Publication (TP) 5245, 2022, SG811-C5-MMC-010 - Crane, Primary Telescoping Boom Pedestal Type – Model 100-55

Coast Guard Technical Publication (TP) 5336, 2007, The Cranesmart "Lmi" System

Surface Forces Logistics Center Standard Specification 0000 (SFLC Std Spec 0000), 2022, General Requirements

Surface Forces Logistics Center Standard Specification 0740 (SFLC Std Spec 0740), 2022, Welding and Allied Processes

Surface Forces Logistics Center Standard Specification 5000 (SFLC Std Spec 5000), 2022, Auxiliary Machinery Systems

Surface Forces Logistics Center Standard Specification 6310 (SFLC Std Spec 6310), 2022, Requirements for Preservation of Ship Structures

OTHER REFERENCES

Crane Smart V5 System Universal User manual 8/21/2023

3. REQUIREMENTS

3.1 General.

3.1.1 CIR. The Contractor must submit a CIR for the inspections listed in the following paragraph(s):

- 3.2 Operational test, initial
- 3.3 Swing Drive Gears
- 3.4 Main Winch Housing
- 3.6 Measure Swing Bearing Wear

3.1.2 Tech Rep. The Contractor must provide the services of an OEM Authorized/licensed Tech Rep for the Allied TB100-55 Crane to accomplish the following tasks on site:

- Provide manufacturer's proprietary system/equipment information, software and tools.
- Assist with and ensure compliance with manufacturer's procedures and standards during disassembly, inspection, repair, modification, calibration, and reassembly of the equipment/system.
- Oversee no-load operational test and load testing
- Annual Crane Survey

3.1.2.1 The Contractor must submit the name of the Tech Rep to the COR at the Arrival Conference.

3.1.2.2 Preservation Tech Rep. The Contractor must provide the services of Preservation Tech Rep AMPP Senior Certified Coatings Inspector (NACE CIP Level 3/SSPC PCI Level 3) with Marine Coatings Inspection Specialty to perform the following duties:

- Serve as an Independent Coating Tech Rep.
- Accomplish applicable requirements in SFLC Std Spec 0000, Paragraph 3.2.4.2.2 (Coating Tech Rep).
- Oversee the Preservation Plan requirements in SFLC Std Spec 6310, Paragraph 3.2 (Preservation plan).
- Review and sign daily reports summarizing work. See forms QA-1 thru QA-5 provided in the General Requirements.

- Submit reports to the COR within 24 hours of each inspection.

3.1.2.2.1 Qualifications/certifications. Submit the Coating Tech Rep's qualifications/certifications in accordance with SFLC Std Spec 0000, 3.2.4.2.2.3 and 3.2.4.2.4, include name, certificate number and documented completion of relevant AMPP (NACE/SSPC) Courses and Exams.

3.1.2.2.2 Submit the name and the certification of the Tech Rep to the COR at the Arrival Conference. Include the dates of services the Qualified Tech Reps will be on site as per their subcontract documentation.

3.1.2.3 The Contractor must provide the services of an OEM Authorized/licensed Tech Rep for the Crane Smart Sytems to accomplish the following tasks on site:

- Initial operation Test
- Groom and calibrate.
- Final Op test/weight test

3.1.2.3.1 The Contractor must submit the name of the Tech Rep to the COR at the Arrival Conference. Include the dates of services the Qualified Tech Reps will be on site as per their subcontract documentation.

3.1.3 Protective measures. The Contractor must furnish and install all protective measures in accordance with SFLC Std Spec 0000, paragraph 3.3.3 (Vessel component, space, and equipment protection).

3.1.4 Interferences. The Contractor must handle all interferences in accordance with SFLC Std Spec 0000, paragraph 3.3.5 (Interferences).

NOTE

Coast Guard personnel will operate all shipboard machinery and equipment.

3.3 Operational test, initial. Prior to commencement of work, the Contractor must witness Coast Guard personnel perform an initial operational test of all items or shipboard devices to be disturbed, used, repaired, or altered, to demonstrate existing operational condition. Submit a CIR documenting inspection, calibration and test results making any recommendations for repairs. Perform the following tests:

- No load test followed by rated test
- Emergency Lowering System
- Local/Remote starts and e-stops.

3.2.1 Visually inspect the crane per paragraph 3.2.1 of SFLC Std Spec 5000. Visual inspection to include removing covers to inspect crane cab and crane pedestal. Visually inspect Hydraulic Power Unit during operation. Verify operation of all flood lights. Visually inspect all foundations welds for indications of cracks.

3.3 Perform Annual maintenance. The Contractor must perform all the annual maintenance tasks listed in Table 6-2 of CG TP 5245. For LMI system calibration instructions utilize the Cranesmart LMI 5 Universal Manual at this link in section 5.2: https://cranesmart.com/support/resources.

- Obtain oil samples for analysis
- Renew winch drive oil
- Renew HPU Gear Box Oil
- Inspect sheaves
- Renew hydraulic system oil
- Renew swing drive planetary gear reducer transmission fluid
- Complete Annual Crane Survey
- Calibrate LMI

3.3.1 Swing Drive Gears. Drain and dispose of the oil in each of the swing drive planetary gear reducer transmissions. Provide and install new oil in each planetary gear drive transmission. Follow guidance in TP 5245. Oil may be drained from the planetary gear drives and the gear drives may be refilled without removing the planetary gear drives from the crane using drain plugs on the bottom of the gear drives and vent plugs on the top.

3.3.1.1 In the presence of CG Inspector, as the oil is drained, collect one (1) sample from each planetary gear drive in accordance with paragraph C2.1.3.1 of SFLC Std Spec 5000. Label each sample. Inspect the oil for presence of water or other contamination. Send sample from each gear drive to a laboratory for wear metal particle analysis.

3.3.1.2 Submit **CIR** with the results of the oil samples.

3.3.1.3 Refill each planetary gear drive housing with oil as described in TP 5245.

3.3.2 Main Winch Housings and aux winch. Renew oil in main winch and aux winch. As the oil is drained, collect one (1) sample from each planetary gear drive in accordance with paragraph C2.1.3.1 of SFLC Std Spec 5000. Label each sample. Inspect the oil for presence of water or other contamination. Send sample from each gear drive to a laboratory for wear metal particle analysis. Submit a **CIR** with the oil results.

3.4 Service and Inspect. Service and inspect the entire system in accordance with paragraph 3.2.2 of SFLC Std Spec 5000 and TP 5245 Chapter 6. Submit a CFR documenting results of all inspections and any recommended repairs.

3.5 Bolts and Fasteners. The Contractor must follow paragraph 6.5.6.1 TP 5245 to check crucial bolts and fasteners. Submit CFR.

3.6 Measure Swing Bearing Wear. The Contractor must follow paragraph 6.5.6.2 TP 5245 to measure the swing bearing wear. Submit CIR.

3.7 Crane Partial Preservation. The Contractor must perform surface preparation and partial preservation for up to 33% of the crane's s painted surfaces. Partial preservation must include one additional finish

coat over 100% of the crane painted surfaces. Follow the requirements of SFLC Std Spec 6310 and SFLC STD Spec 5000 Para 3.2.4. Include preservation of:

- Pedestal vent trunks and covers
- Cab window frames
- Cab Interior
- Ladder

3.7.1 Quality assurances and controls. The Contractor must abide by all the safety, preservation, and quality control requirements specified in SFLC Std Spec 0000, Paragraph 3.2.4.2 (In-process QC measures for "critical-coated surfaces"), and the quality controls specified in SFLC Std Spec 6310, Paragraph 3.1.10 (Coating inspection) and 3.1.15 (Coating system tests).

3.7.2 Pre-surface preparation wash. The Contractor must accomplish low-pressure (less than 5,000 psi) fresh water wash of all affected surfaces, to remove soluble chlorides and other surface contaminants. Refer to SSPC-SP 1, for guidance.

3.7.2.1 When fresh water wash is not possible or practical, remove surface contaminants by one or a combination of solvent cleaning methods in accordance with SSPC-SP 1.

3.7.2.2 In the presence of COR, identify the areas on davit assembly and foundations with signs of corrosion. For estimating purposes, the Contractor must expect that up to 33% of all surfaces will require coating removal to base metal.

3.7.2.3 On areas where damage from corrosion is observed and with concurrence from COR coatings inspector, the Contractor must perform MT in accordance SFLC Std Spec 0740. Submit CFR.

3.7.2.4 Ensure stripe coats (primer and first coat of paint) are applied to all edges, welds and irregular shapes.

3.7.2.5 After removal of all rust and loose paint, the Contractor must feather in the new coats of primer and paint to match existing coating system.

3.8 Cab Windows. The Contractor must perform partial preservation at window locations once windows are removed per STD Spec 5000 and STD Spec 6310.

3.8.1. Remove and renew lower front window and seal per OEM and TP 5245.

3.8.2 Remove top front window and seal. Renew seal per OEM and TP 5245.

3.8.3 Remove and renew left cab sliding window and seal per OEM and TP 5245.

3.8.4 Remove right cab window and seal. Renew seal per OEM and TP 5245.

3.8.5 Remove and renew top window and seal per OEM and TP 5245. Reinstall with new stainless steel cap screws, flat washers and locknuts per STD Spec 5000 appendix D, D2.1.2. Preserve space plate.

3.8.6 Reinstall windows and new seal per TO 5245 and OEM guidance

3.8.7 In the presence of CG Inspector test for leaks once windows are installed. Leak test to be conducted with a water hose (5/8" ID flowing at 30-40 psi) for a minimum of 5 mins per window and ensuring all areas of windows seals are tested. Correct/repair any observed water intrusion.

3.9 Cab Interior

3.9.1. Remove the four 4 floor plates. Handle all interferences per STD Spec 0000.

3.9.2. Preserve floor plates per STD Spec 5000 3.2.4 and STD Spec 6310 and Appendix A, Machinery Deck, Option II.

3.9.3Partial preserve mounting locations and surrounding area of cab floor per STD Spec 5000 and STD Spec 6310.

3.9.4. Reinstall floor plates with new stainless steel hardware per STD Spec 5000 appendix D, D2.1.2

3.10. Platform Access Cover

3.10.1. Remove side access cover to crane control block. Partial preserve cover and mounting location per STD Spec 5000 para 3.2.4.

3.11. Extension Assembly, Handrails:

3.11.1. Remove extension assembly, deck grates and handrails from cab.

3.11.2. Preserve extension assembly and handrails per STD Spec 5000 and STD Spec 6310 and Appendix A, Machinery Deck, Option II.

3.11.3. In the presence of CG Inspector after coating system is removed, visually inspect extension assembly and handrails for cracks and deformations. NDE all welds and deformations with the MT method per STD Spec 0740. NDE to be conducted by certified NDE inspector. Submit CFR of inspections results and recommend repairs if necessary.

3.11.4. Reassemble handrails to extension assembly with new hardware per TP 5245 and STD Spec 5000 Appendix D, D2.1.2.

3.115. Reinstall to crane cab once preservation is complete of mounting surface to cab with new hardware per STD Spec 5000 appendix D, D2.1.2

3.11.6. Touch up preserve hardware once installed in accordance with SFLC Std Spec 6310. Abide by all touch-up requirements outlined in para 3.1.13.

2.12. Ladder

3.12.1. Remove ladder.

3.12.2. Preserve ladder per STD Spec 5000 and STD Spec 6310 and Appendix A, Machinery Deck, Option II.

3.12.3. In the presence of CG Inspector after coating system is removed, visually inspect ladder for cracks and deformations. NDE all welds and deformations with the MT method per STD Spec 0740. NDE to be conducted by certified NDE Inspector. Submit CFR of inspections results and recommend repairs if necessary.

3.12.4. Partial preserve ladder mounting locations to crane per STD Spec 5000. In the presence of CG Inspector inspect mounting locations for cracks and deformations. NDT all welds and deformations with the MT method per STD Spec 0740. NDE to be conducted by certified NDE inspector. Submit CFR of inspections results and recommend repairs if necessary.

3.12.5. Reinstall ladder once mounting locations are preserved with new hardware per TP 5245 and per STD Spec 5000 appendix D, D2.1.2

3.12.6. Touch up preserve hardware once installed in accordance with SFLC Std Spec 6310. Abide by all touch-up requirements outlined para 3.1.13.

3.13 Boom Rests. The contractor must remove existing wooden boom rest blocks. Procure and fabricate new boom rest blocks fabricated out of Ultra High Molecular Weight (UHMW) plastic material. Contractor to ensure proper fit of new boom rests with crane in stowed position once installed. Install new boom rest blocks with stainless steel bolts, washers and locknuts per STD Spec 5000 appendix D, D2.1.2. Washers to be installed on the bolt head and bolt thread ends once partial preservation is complete

3.13.1 Boom Rests Preservation. Remove existing blocks, padding and hardware. Partial Preserve entire assembly per STD SPEC 5000 Paragraph 3.2.4.3.3. Boom rests are classified as a Critically Coated Surface. Use STD SPEC 6310 Appendix A; Machinery, Deck coating system. Final coat color to match existing crane topcoat. Reinstall existing padding with new stainless-steel bolts, washers and locknuts per STD Spec 5000 appendix D, D2.1.2. Install washers on the bolt head and bolt threads

3.14 Cylinders. In the presence of CG Inspector the Contractor must visually inspect cylinder mounting locations on crane for and cracks and deformations. NDT mounting location welds via MT method per STD Spec 0740. Submit CFR of inspection results and recommended repairs if necessary.

3.14.1 Remove and renew boom cylinder counterbalance valves per TP 5245 and OEM Guidance. Provide pressure setting and certification paperwork to COR via CFR. Upon completion of final OP test, apply corrosion inhibiting tape for corrosion prevention.

3.15 HPU. The contractor must renew the FWD Return filter housing indicator.

3.15.1 Disassemble both return filter housing assemblies and replace gasket per TP 5245 and OEM guidance.

3.15.2 Renew HPU tank temp gauge.

3.15.3 Remove and replace SW Supply hose per STD Spec 5000 C2.2.

3.15.4 Remove and inspect sight glass and tank flange surfaces. Submit CFR of inspection results.

3.15.5 Reinstall sight glass with new impregnated gaskets per OEM guidance.

3.15.6 Remove HPU tank inspections covers and gaskets. Reinstall with new impregnated rubber gaskets with OEM guidance.

3.15.7 Contractor must remove all oil and oil absorbent pads in the HPU Pedestal compartment. Solvent clean HPU and all components, deck and bulkhead insulation up to 2 feet above S/W Cooler. CG Inspector to approve cleanliness prior to repairs and energizing the system for OP test.

NOTE

Absorbent pads were placed to collect oil from to existing hydraulic leaks,

3.15.8 Following OP test hose fittings to have corrosion inhibiting tape applied (such as Densyl or S2S). Install chafing gear if needed due to hose contact with equipment, hoses or components.

3.16. Boom tip spacer guides 4 each. The Contractor must remove and renew all four boom tip sheave spacer guides per OEM guidance.

3.16.1 Preserve spacer guides with inorganic zinc per STD Spec 5000 para 3.2.4.5.3

3.16.2 Reinstall with new stainless steel hardware per OEM guidance.

3.17 Boom Top Roller and cage. The Contractor must remove wire roller and cage from top of boom.

3.17.1. Visually inspect mounting tabs and cage for cracks and deformation. NDE mounting welds per STD Spec 0740 MT Method. Submit NDE results via CFR with any recommended repairs if necessary.

3.17.2 Preserve roller with inorganic zinc per STD Spec 5000 para 3.2.4.5.3

3.17.3 Preserve cage per STD Spec 5000 and STD Spec 6310 and Appendix A, Machinery Deck, Option II.

3.17.4 . Reinstall to boom once mounting location has been preserved with new stainless steel hardware.

3.18 Boom Tip Flood Light. The Contractor must open and inspect the boom tip flood light. Renew light bulb.

3.18.1 Clean out any debris and water on the inside of the light lens.

3.18.2 Remove existing lens cover gasket and install with new lens cover gasket.

3.18.3 Reassemble lens cover to flood light housing.

3.18.4 In the presence of CG Inspector test water integrity spraying flood light housing with fresh water from a 5/8” hose @ 30-40 psi . Open housing and identify if any water intrusion. If water intrusion is present continue to troubleshoot/repair until no more water intrusion.

3.19. Bracket. The Contractor must remove and renew the boom tip flood light housing bracket.

3.19.1 Unbolt and remove floodlight from bracket. Flood light can be secured to the crane without unwiring.

3.19.2 Unbolt bracket from bracket weldment; TP 5245.

3.19.3 Fabricate new bracket out of stainless steel material. Bracket to be of same design and dimensions.

3.19.4 Install new bracket to bracket weldment with stainless steel hardware.

3.19.5 Reinstall floodlight to new bracket and ensure flood light move freely.

3.19.6 Remove frozen swivel bar from boom and repair swivel bar to operating condition.

3.19.7 preserve swivel bar and reinstall to boom. Swivel bar must swivel with light attached during crane movement.

3.20 . Sheaves. The Contractor must use GFE provided sheaves to renew sheaves, prepare sheaves for preservation by removing the manufacturer's coating material from IAW SFLC STD Spec 6310.

3.201 Perform full preservation of sheaves in accordance the requirements of SFLC Std Spec 6310, Machinery Deck option IV. Final coat (SPAR) to match adjacent surfaces. Do not apply paint to sheave groove. Preserve surfaces except for the sheave groove, in accordance with STD Spec 5000 and 6310. Top coat to be Spar.3.21 Flexible hoses. The Contractor must inspect the hydraulic hoses. Report damaged hoses or hoses with missing hose tags. Contractor must obtain approval from COR for hose renewals. Submit CFR with list of defective hoses. Report the following:

- Missing/illegible hose tags
- Leakage from hose or fittings
- Fitting discoloration
- Hose slipping out of end fittings
- Twisting, kinking, or distortion of hose
- Bulging, swelling, necking, or flattening sections exceeding 10% of the hose outside diameter
- Loose or delaminated cover
- Hose cover damaged by cuts, abrasions, cracking, or chafing, or if internal wires or fiber reinforcement is exposed
- Hose cover wrinkling exceeding 5% of hose outside diameter
- Blistering or hard spots.
- Paint on the hose cover in excess of 10% of total surface
- Physical damage to hose/connectors
- >10 years since hose installation date.

NOTE

Hydraulic hoses (flexible connections) service life is 12 years.

For continued service, the installed hoses must be free from damage or defects, and the hose tags must indicate <10 years since installation.

Hoses with missing/illegible hose tags must be renewed.

3.21.1 All hose fittings exposed to weather, must be protected with a layer of petro-tape or equivalent. The tape must be removed to allow visual inspection of the hose joint. After hose fitting inspections/hose renewal, the Contractor must apply petro-tape or equivalent to wrap all hose end fittings.

3.21.2 For Hoses requiring renewal, the Contractor must follow all the requirements of SFLC Std Spec 5000, Appendix C paragraph C2.2. through C2.2.1.5.

3.21.2.1 Prior to each hose disconnection, the Contractor must record equipment, supply, and return line information for use in later reconnection. Retain all removed hardware for reference during reinstallation. Cap (Plastic Cap, Metal Cap, Blank Flange with a Gasket) all open hydraulic lines immediately after breaking.

3.21.2.2 Renew hose end fittings, O-rings, two part clamps, and mounting bolts.

3.21.3 Remove and dispose of the old hoses and maintain existing system cleanliness.

3.21.4 Hose tags. The Contractor must provide new stamped or engraved metal hose tags with the following bulleted information, in accordance with SFLC Std Spec 5000, Figure C-1. Tag installation must be done in a manner that does not interfere with the normal hose flexing motion. Attach hose tags to their respective hose using metal strapping. Verify the tag can be slightly moved by hand, allowing the hose to expand and contract as designed while minimizing chaffing.

· Hose Log Item Number (Serial Number)

· Hydrostatic Test Pressure (psi)

· Hydrostatic Test Date (DD/MM/YY)

· Service Life (Replacement Date, 12 years following installation date) Date (QTR "Q"/FY)

3.21.5 Hose fitting documentation. For each renewed hose assembly, the Contractor must submit the information listed below in Microsoft Excel format. A template for the information will be provided by the COR. Submit a CFR.

· Hose Number

· System

· Description (i.e. #1 A/C Inlet)

· Location (Compartment Number)

· Length (in.)

· Part No.

· Hose Material

· Size (in.)

· Fitting #1

· Fitting #2

· Design Pressure (psi)

· Hydrostatic Pressure (psi)

3.22 Groom and Lubricate. Perform a thorough groom and lubricate in accordance with SFLC Std Spec 5000, 3.2.6. Use low temperature grease. See paragraph 6.5.4.4 and 6.5.4.5 of CG Tech Pub 5245.

3.23 Lubricate Wire Rope. The Contractor must pressure lubricate the wire rope in accordance with the "Lubricate Wire Rope" section of Chapter 6 in TP 5245 and Paragraph D 2.2.1. of SFLC Std Spec 5000.

3.24 Label Plate. Install a label plate for the system in accordance with paragraph B2.9 (Label plates) of appendix B of SFLC Std Spec 5000.

3.25 Final test. After completion of all other work, in the presence of the Coast Guard Inspector and the Technical Representative the Contractor must conduct a No-load Operational Test followed by a winch brake/modified static, Dynamic and Rated Weight Test per Tables 1 and 2 in accordance with SFLC Std Spec 5000 Appendix B, paragraph B2.4. Submit CFR of test results.

TABLE 1 – WEIGHT TEST

Main Hoist Test Weights	
Winch Brake/Modified Static	41,800 lbs
Dynamic	41,800 lbs
Rated	38,000 lbs

TABLE 2 – WEIGHT TEST

MAIN HOIST TEST WEIGHTS	
Winch Brake/Modified Static	7,400 lbs
Dynamic	7,400 lbs
Rated	6,720 lbs

3.26 Visual inspection. After load testing of weight handling equipment, a visual inspection on all load bearing parts, strength welds and any repaired areas must be made. If any cracking or deformation is sighted, or suspect, paint must be removed from the suspect area, and an NDT inspector must perform magnetic particle testing in accordance with Std Spec 0740. Submit a CFR with the results of the inspection.

3.27 Touch-up preservation. The Contractor must prepare and coat all new and disturbed exterior and interior surfaces to match existing adjacent surfaces, in accordance SFLC Std Spec 6310, 3.1.13.

4. NOTES

This section is not applicable to this work item.

WORK ITEM 44: Trawl / Core Winch, Inspect and Test

1. SCOPE

1.1 Intent. This work item describes the requirements for the Contractor to the Contractor to inspect and test the Trawl/Core Winch listed in Table 1.

TABLE 1 - LIST OF EQUIPMENT

COMPONENT IDENTIFICATION	MANUFACTUERER	MODEL NUMBER	LOCATION
Trawl / Core Winch	InterOcean Systems, Inc	71217	Winch Room (2-135-0-E)

1.2 Government-furnished property.

None

2. REFERENCES

COAST GUARD DRAWINGS

Coast Guard Drawing 420 WAGB 591-502, Rev E, Winch Assembly Traw/Core

Coast Guard Drawing 420 WAGB 801-001, Rev K, Booklet of General Drawings

COAST GUARD PUBLICATIONS

Coast Guard Technical Publication (TP) 5262, SWBS 591, May 2020, Science Winch, Mechanical System & Wire Handling (Volume 1)

Coast Guard Technical Publication (TP) 5264, SWBS 591, Nov 2003, Science Winch, Mechanical System & Wire Handling (Volume 3)

Coast Guard Technical Standard (TS) 591, Rev -, Oceanographic Research Equipment

Surface Forces Logistics Center Standard Specification 0000 (SFLC Std Spec 0000), 2022, General Requirements

Surface Forces Logistics Center Standard Specification 5000 (SFLC Std Spec 5000), 2022, Auxiliary Machine Systems

Surface Forces Logistics Center Standard Specification 6310 (SFLC Std Spec 6310), 2022, Requirements for Preservation of Ship Structures

OTHER REFERENCES

None.

3. REQUIREMENTS

3.1 General.

3.1.1 CIR. The Contractor must submit a CIR for the inspections listed in the following paragraph(s):

- 3.2.1 Operational test, initial.

3.1.2 Tech Rep. The Contractor must provide the services of qualified Tech Rep, who is familiar with the Trawl / Core winch, to accomplish the following tasks – on site. The Technical Representative must be present for all critical phases of the work such as disassembly and reassembly stages for removal, inspection, renewing or repairing, installing, testing and calibrating each winch's components:

- Provide manufacturer's proprietary information, software, and tools pertinent to the equipment/system.
- Assist with proper repair methods, and ensure compliance with manufacturer's procedures and standards during disassembly, inspection, repair, modification, calibration, and reassembly of the equipment/system.
- Observe Load Testing of the Winch Assembly.
- Provide Test Rope for Load Testing of Winch.

3.1.2.1 The Contractor must ensure that the Tech Rep is a certified representative of InterOcean Systems.

3.1.2.2 The Contractor must submit the name of the Tech Rep to the COR at the Arrival Conference.

3.1.3 Protective measures. The Contractor must furnish and install all protective measures in accordance with SFLC Std Spec 0000, paragraph 3.3.3 (Vessel component, space, and equipment protection).

3.1.4 Interferences. The Contractor must handle all interferences in accordance with SFLC Std Spec 0000, paragraph 3.3.5 (Interferences).

NOTE

Coast Guard personnel will operate all shipboard machinery and equipment.

3.2 Operational test, initial. Prior to commencement of work, the Contractor must witness Coast Guard personnel perform an initial operational test of the equipment listed below to demonstrate existing operational condition and inspect in accordance with Paragraph 3.2.1 of SFLC Std Spec 5000. Submit a CIR.

3.3 Wire Rope. The Contractor must remove the wire rope, clean, inspect, and rewind each of the drums of wire rope. The wire rope must be thoroughly cleaned using CG TP 5262, Section 6, as guidance prior to inspection. Submit a CFR.

3.3.1 The Contractor must lubricate the wire rope in accordance with CG TP 5262, Section 6.

3.3.2 The Contractor must install all wire rope as directed by the Technical Representative. Wire rope must be installed in such a manner that there is no possibility of twists or crossing in the wire rope.

3.3.3 The wire rope must only be mounted with an over-wound spool, all other methods are unacceptable.

3.3.4 The Contractor must renew both grease injector pumps IAW OEM requirements for Trawl /Core winch.

3.4 Sheave assemblies. The Contractor must clean and inspect each of the sheave assemblies. Measure the sheave wear. Note any indications of pin wear or bearing failure. Reassemble each of the sheave assemblies. Submit CFR.

3.5 Winch Gear Boxes. The Contractor must drain the gearbox on each winch and dispose of the used oil in accordance with all applicable Federal, State, and local laws and regulations. In the presence of the Coast Guard Inspector, take a sample of the used oil and send it out for spectrographic analysis. Submit a CFR and the results of the oil spectrographic analysis.

3.5.1 The Contractor must open any inspection covers and inspect the gears inside of the gearbox.

3.5.2 The Contractor must refill each gearbox in accordance with CG TP 5264, Paragraph 2.3.3.

3.6 Electro-Mechanical Brakes. The Contractor must disassemble the brake as required to access the brake linings. Conduct a visual inspection of all components. . Submit a CFR. Reassemble the brake in accordance with CG Tech Pub 5264.

3.6.1 The Contractor must renew both band brakes and electro-mechanical disk brake.

3.7 Winch Foundations. In the presence of the Coast Guard Inspector, the Contractor must remove magnesite as need to perform visual inspection of all winch foundation welds in accordance with SFLC Std Spec 0740. Do not remove the winches to conduct the inspection. Submit CFR.

NOTE

Areas where magnesite is removed for inspection will be preserved by Contractor during touch-up preservation

3.7.1 In the presence of the Coast Guard Inspector, the Contractor must visually inspect the welds attaching the "I" Beam monorail to the cutter's structure. The Contractor must remove and reinstall insulation for the weld inspections.

3.8 Groom and Lubricate. After completion of all maintenance and repair work, the Contractor must “groom and lubricate” the entire system. The Contractor must witness Coast Guard personnel operate each winch without load and ensure that each winch operates properly. See SLFC Std Spec 5000 Paragraph 3.2.6 for grooming requirements.

3.8.1 Contractor must perform inspection of grease pumps. Submit CFR.

3.9 Operational test, post repairs. After completion of work and in the presence of the Coast Guard Inspector, the Contractor must thoroughly test and demonstrate the equipment listed below to be in

satisfactory operating condition in accordance with Paragraph B2.3 of SFLC Std Spec 5000, CG TP 5264, and CG TS 591. Submit a CFR.

3.10 Label plate. The Contractor must install a label plate to the below listed systems to document satisfactory test completion in accordance with SFLC Std Spec 5000, Appendix B, Paragraph B2.9 (Label Plates): Trawl/Core Winch.

3.11 Touch-up preservation. The Contractor must prepare and coat all new and disturbed surfaces to match existing adjacent surfaces in accordance with SFLC Std Spec 6310, paragraph 3.1.13 (Touch-ups and minor coating repairs.)

3.1.1 Touch up preservation to include areas where magnesite was removed for inspection. Feather in new coating system as needed to make a smooth transition with magnesite.

4. NOTES

This section is not applicable to this work item.

WORK ITEM 45: Decks (Interior), Preserve

Intent. This work item describes the requirements for the Contractor to perform preservation of the assigned deck surfaces listed on Table 1.

TABLE 1 DECK PRESERVATION

LOCATION	AREA (SQFT)	PRESERVATION LEVEL	TOPCOAT COLOR	NOTES	*REQUIRED MEASUREMENT OF PITS/UT FAIRING COPMPOUND GALLON KITS
03-65-1-Q FAN-ROOM	100	Partial Preservation	Grey	Include preservation of accessible area of interior of cofferdam	Pits 10,UT 40 Fairing Compound Kits: 1/2
1-117-0-Q MAIN LABORATORY	250	Full Preservation	Grey	Renew all deck installed Eyelets. For estimating purposes use 50 eyelets to be renewed.	Pits 50, UT 200 Fairing Compound Kits: 1
02-50-0-A MEDICAL SUPPLY STOREROOM	50	Partial Preservation	Grey	Coordinate with corpsman for removal and proper handling of sensitive stores	Pits 10 UT 40 Fairing Compound Kits: 1/2

*For estimating purposes

1.2 Government-furnished property.

None.

2. REFERENCES

COAST GUARD DRAWINGS

Coast Guard Drawing 420-WAGB 631-1, Rev D, Paint Schedule & Corrosion Control

Coast Guard Drawing 420-WAGB 801-1, Rev -, Booklet of General Drawings

COAST GUARD PUBLICATIONS

Surface Forces Logistics Center Standard Specification 0000 (SFLC Std Spec 0000), 2022, General Requirements

Surface Forces Logistics Center Standard Specification 0740 (SFLC Std Spec 0740), 2022, Welding and Allied Processes

Surface Forces Logistics Center Standard Specification 6310 (SFLC Std Spec 6310), 2022, Requirements for Preservation of Ship Structures

Surface Forces Logistics Center Standard Specification 6341 (SFLC Std Spec 6341), 2022, Install Interior Deck Covering Systems

OTHER REFERENCES

American Society for Nondestructive Testing (ASNT), Recommended Practice No. SNT-TC-1A, 2016, Personnel Qualification and Certification in Nondestructive Testing

American Society for Nondestructive Testing (ASNT), Standard No. ANSI/ASNT CP-189-2016, 2016, ASNT Standard for Qualification and Certification of Nondestructive Testing Personnel

American Welding Society, AWS D1.2-96, 1996, Structural Welding Code, Steel

ASTM Internationals (ASTM) G46, 2018, Standard Guide for Examination and Evaluation of Pitting Corrosion

MIL-PRF-24176C, Oct 2004, Cement, Epoxy, Metal Repair and Hull Smoothing

The Society for Protective Coatings (SSPC) Surface Preparation Specification No.11 (SSPC-SP 11), 2016, Bare Metal Power Tool Cleaning

3. REQUIREMENTS

3.1 General.

3.1.1 CIR.

None

3.1.2 Tech Rep.

The Contractor must provide the services of a Qualified Tech Rep to provide the following on site:

- Accomplish all VT inspections, pit measurement and UT inspections.

3.1.2.1 Qualifications/certifications. Submit the Tech Rep's qualifications/certifications in accordance with SFLC Std Spec 0000, 3.2.4.2.2.3 and 3.2.4.2.4, include name, certificate number and documented completion NDE Operator/Level 1 certified and qualified in accordance with ASNT No. SNT-TC-1A.

3.1.2.2 Submit the name and résumé of the Tech Rep to the COR at the Arrival Conference. Include the dates of services the Qualified Tech Reps will be on site as per their subcontract documentation.

3.1.3 Protective measures. The Contractor must furnish and install all protective measures in accordance with SFLC Std Spec 0000, paragraph 3.3.3 (Vessel component, space, and equipment protection). Specific areas/equipment/components to be protected include, but are not limited to:

- Adjacent deck surfaces and deck fittings
- Machinery and equipment (e.g. motors, pumps, fans, controls, panels, hoses, racks, piping, and supports)
- Ventilation systems (e.g. intakes, exhausts, supplies, and returns)
- Drains, covers, and plugs

3.1.4 Interferences. The Contractor must handle all interferences in accordance with SFLC Std Spec 0000, Paragraph 3.3.5 (Interferences). Known interferences include, but are not limited to the following:

- Piping and supports
- Cables and supports
- Limited working space
- Deck Drains
- Ventilation and Ducting
- Limited work spaces
- Medical supplies in 02-50-0-A
- Storage cabinets

3.1.5 Quality assurances and controls. The Contractor must abide by all the safety, preservation, and quality control requirements specified in SFLC Std Spec 6310, Paragraph 3.1.10 (Coating inspection) and 3.1.15 (Coating system tests).

NOTE

Coast Guard personnel will operate all shipboard machinery and equipment.

3.2 Operational test, initial. Prior to commencement of work, the Contractor must witness Coast Guard personnel perform an initial operational test of all items or shipboard devices to be disturbed, used, repaired, or altered, to demonstrate existing operational condition. Submit a CFR.

3.3 Preservation. The Contractor must perform preservation of compartments as listed on Table 1. Follow the requirements of SFLC Std Spec 6310; SYSTEM/APPENDIX B, Decks, Metal Interior and Non-Skid Areas (Metal Decks – No application of deck coverings). Prepare and coat deck surfaces, including angled portions of the deck, up to 6 inches above deck.

NOTES

1. **Some of the decks listed on Table 1 may be coated with Sovapon epoxy mastic. Use High build epoxy as indicated in SFLC 6310 for deck preservation including partial preservation.**
2. **Water jetting or blasting is not permitted.**

3.3.1 Contractor must use Power tools only for surface preparation.

3.4 Inspection. In presence of the Coast Guard Inspector, the Contractor must inspect all exposed substrates in Table 1, after cleaning surfaces/removing coating and prior to priming substrates in accordance with SFLC Std Spec 0740. Submit a CFR.

3.4.1 Visual inspection (VT). The Contractor must visually inspect all exposed substrates for any pitting, corrosion, and erosion.

- Component inspection. Visually inspect all structure surfaces, including, but not limited to cableways, terminals, structural members, and fasteners.

NOTE

Depending on level of corrosion and condition of deck the quantity of pit measurements and UT shots required may be less than those indicated on Table 1. If more are necessary (severely corroded decks), the Contractor must submit CFR.

3.4.2 Pit measurement. The Contractor must measure all observed pits on exposed substrates (after removing/cleaning surface covering/coatings and prior to priming substrates) in accordance with SFLC Std Spec 0740, Paragraph 3.13 (Evaluation of pitting corrosion). For bidding purposes, the Contractor must use estimate of pits listed on Table 1 are required.

- Mark up a copy of Coast Guard Drawings to show all locations selected for measurement.
- Report the measurements including results (the depth of the pits), locations, and illustrations/marked up drawings.

3.4.3 Ultrasonic measurement (UT. The Contractor must take UT measurements in the surrounding area of any pit measuring greater than 25% of plate thickness. UT measurements must be taken in the four quadrants at an equal-distant radius from the pit center until full plate thickness is measured. For bidding purposes, the Contractor must estimate the quantity of UT measurements for each compartment as listed on Table 1. All UT measurements must be taken on cleaned surfaces in accordance with SFLC Std Spec 0740 Appendix C.

- Mark up a copy of Coast Guard Drawings. Show all locations selected for measurement.
- Report the measurements including results (thicknesses, and cracks), locations, and illustrations/marked up drawings.

3.5 Substrate fairing and repair by filling Epoxy for shallow pits and small corrosions (i.e. pits < 25% or corrosions < 25%). As designated by the COR, the Contractor must repair small pin holes, shallow pitted substrates (with remaining plate thicknesses over 75% of required plate thicknesses), and fair corroded substrates (with remaining cross sections over 75% of required cross section areas), after removing insulation, coating, or deck covering using Epoxy Fairing Material in accordance with SFLC Std Spec 6310, Appendix A (Cutter and Boat Exterior Painting Systems), "Metal Repair and Hull Smoothing", MIL-PRF-24176, and manufacturers' instructions.

NOTE

"Substrate fairing and repair by filling Epoxy for shallow pits and small corrosions (i.e. pits < 25% or corrosions < 25%)" is a supplement barrier intending to help delay penetration.

3.6 Touch-up preservation. The Contractor must prepare and coat all disturbed surfaces to match existing

adjacent surfaces in accordance with SFLC Std Spec 6310, Paragraph 3.1.13 (Touch-ups and minor coating repairs).

4. NOTES

4.1 Not applicable

WORK ITEM 46: U/W Body, Diver Inspect

1. SCOPE

1.1 Intent. This work item describes the requirements for the Contractor to inspect vessel's U/W body, while the vessel is moored at pier side. Provide certified divers and tender teams, as well as necessary support personnel and equipment to accomplish the tasks specified herein. Inspected surfaces or components include, but are not limited to as follows :

- U/W body coating system
- U/W hull plate
- Sea chests and strainers
- Propellers
- Propeller shafts
- Rudders
- Electronics sensors/transducers
- Zinc anodes
- ICCP system
- Miscellaneous appendages (e.g. bilge keels, rope guards, and fairwaters)

1.2 Government-furnished property.

None.

2. REFERENCES

COAST GUARD DRAWINGS

Coast Guard Drawing 420-WAGB-085-001, Rev G, Docking Plan
Coast Guard Drawing 420-WAGB-101-064, Rev D, Shell Expansion
Coast Guard Drawing 420-WAGB-161-001, Rev A, Forefoot Casting
Coast Guard Drawing 420-WAGB-161-002, Rev D, Shaft Bossing Casting
Coast Guard Drawing 420-WAGB-161-003, Rev B, Rudder Horn
Coast Guard Drawing 420-WAGB-161-004, Rev -, Forefoot Transition Castings
Coast Guard Drawing 420-WAGB-161-010, Rev -, Stern Tube Casting
Coast Guard Drawing 420-WAGB-163-001, Rev D, Sea Chest and Vent Modifications

Coast Guard Drawing 420-WAGB-184-014, Rev 1, SLEP SBP 29 & EM 304 Transducer Casings Install

Coast Guard Drawing 420-WAGB-243-001, Rev A, Shafting Arrangements

Coast Guard Drawing 420-WAGB-243-002, Rev A, Shaft Forgings

Coast Guard Drawing 420-WAGB-243-003, Rev C, Shafting Details

Coast Guard Drawing 420-WAGB-424-004, Rev L, Hull Mounted Transducers Installation Details

Coast Guard Drawing 420-WAGB-424-006, Rev E, General Arrangement of Elec Equipment – Transducer Well

Coast Guard Drawing 420-WAGB-424-501, Rev -, Outline - Ice Hardened Sea Chest

Coast Guard Drawing 420-WAGB-424-502, Rev -, Outline - Ice Hardened Sea Chest

Coast Guard Drawing 420-WAGB-424-617, Rev -, Outline-Ice Hardened Sea Chest for Spare Transducers

Coast Guard Drawing 420-WAGB-562-001, Rev E, Rudders Units 021 & 022

Coast Guard Drawing 420-WAGB-568-001, Rev C, Bow Thruster Installation Arrangement and Details

Coast Guard Drawing 420-WAGB-801-001, Rev K, Booklet of General Drawings

COAST GUARD PUBLICATIONS

Surface Forces Logistics Center Standard Specification 0000 (SFLC Std Spec 0000), 2022, General Requirements

Surface Forces Logistics Center Standard Specification 0740 (SFLC Std Spec 0740), 2022, Welding and Allied Processes

Surface Forces Logistics Center Standard Specification 6310 (SFLC Std Spec 6310), 2022, Requirements for Preservation of Ship Structures

Surface Forces Logistics Center Standard Specification 8634 (SFLC Std Spec 8634), 2022, Drydocking

OTHER REFERENCES

Code of Federal Regulations (CFR) Title 29, Part 1910, Subpart T, 2023, Commercial Diving Operations

NAVSEA 4730/3, 2004, Driver Hull Inspection Data

NAVSEA S0600-AA-PRO-170, Rev 2 Change A, 2014, Underwater Ship Husbandry Manual, Chapter 17 Inspections

Underwater Ship Husbandry Manuals

3. REQUIREMENTS

3.1 General.

3.1.1 CIR. The Contractor must submit a CIR for the inspections listed in the following paragraph(s):

None.

3.1.2 Tech Rep. The Contractor must provide the services of Tech Reps and personnel as follows :

- Certified Divers

WARNING

Mixed gas diving and live boating are not permitted.

3.1.2.1 Certified Divers. The Contractor must provide certified divers in accordance with 29 CFR 1910.401-440 and a tender team, as well as necessary support personnel and equipment, to accomplish the work specified herein.

3.1.2.1.1 Qualifications/certifications. Submit the Tech Rep's qualifications/certifications to the COR at the arrival conference.

3.1.2.1.2 Dates of services. Include the dates of services in which Tech Reps and personnels must be on site as per their subcontract documentation.

3.1.3 Protective measures.

None.

3.1.4 Interferences. The Contractor must handle all interferences in accordance with SFLC Std Spec 0000, Paragraph 3.3.5 (Interferences).

3.1.5 Work locations. The concerned work areas are described in Paragraph 1.1. See the Coast Guard Drawings above for guidance and details.

3.1.6 Materials, tools, and services. The Contractor must provide service, tools, and materials to accomplish the requirements in this work item. New components, parts, materials, and paints with the same color, comparable and matching material properties as the existing components/parts. Use references in Sections 1, 2 and SFLC Std Specs for guidance, required materials, and details.

3.1.7 Notification. The Contractor must provide the COR 24 hours advance notice of when the diver inspection will occur. Before diving procedures are commenced, meet with the COR and the Coast Guard Inspector, to discuss diving safety requirements and the securing of cutter machinery, as applicable.

3.2 Pre-diving clearance. The Contractor must ensure that the diving team must obtain clearance from the Officer-of-the-Deck before beginning diving operations. Ensure the Coast Guard Inspector has capability for maintaining continuous two-way communication with diving personnel at all times, during the performance of this work item.

NOTE

At Contractor's request, Ship's force will secure and tag out the cathodic protection system, main engines, steering gear, generator set, A/C unit, fire pumps, and all other machinery which may cause a hazard while a diver is in the water.

3.N Operational test – initial. Prior to commencement of work, the Contractor must witness Coast Guard personnel including C5ISC personnel perform an initial operational test of the equipment listed below to demonstrate existing operational condition. Submit a CFR.

- Transducers

NOTE
Coast Guard personnel will operate all shipboard machinery and equipment.

3.3 Inspections. The Contractor must survey the entire U/W body of the vessel in accordance with Underwater Ship Husbandry Manual, Chapter 17 Inspections, to inspect for abnormal conditions or situations, which may include, but not be limited to the below-listed. Use the drawings listed in Section 2 References for guidance and accomplish the following tasks :

- Coating system defects or failures
- Hull plating and appendage damages
- Deformation in appendages
- Welding corrosion and erosion

3.3.1 Coating system. The Contractor must inspect the condition of the U/W body coating system for any signs of defects, deteriorations, and/or damages as follows :

- Defects : Peeling, Blistering
- Deteriorations : Abrasion
- Damages : Exposed Substrates

3.3.2 Hull. The Contractor must inspect the exterior condition of the hull for presence of marine growth, deformation, and any evidence of major corrosion or electrolytic action. Inspect for deformation along the stem and keel areas, condition of butt-welded seams, doubler plates, lap seams, and any signs of damaged plating or unusual waviness in the plating.

3.3.3 Sea chests and other hull penetrations. The Contractor must accomplish the following :

- Inspect all sea chests and other hull penetrations for signs of any obstructions/marine growth in the openings that might prevent proper suction and discharge of water.
- Inspect for bare metal areas (surrounding penetrations) and for bare metal pitting.
- Inspect for general appearance, loose, damaged, or missing grates, loose or missing fasteners, condition of sea strainers and lockwire on bolt.

3.3.4 Propellers, thrusters, shafts, and associated components. The Contractor must inspect the condition of the propellers, thrusters, shafts, struts, fairwaters, rope guards, and associated components. Note any loose or missing fairwater or rope guard fasteners.

- Inspect propellers for corrosion, pitting, erosion, fouling, cracks, dings, curls, and nicks by side and blade.
- Inspect the condition of the struts, keel drain plugs, rudders, rudder stocks, and rudder bearings, including any damage, pitting on leading and trailing edges of the rudder, and the presence of drain plugs.

- Inspect palm bolts by handling bolts to determine if they are loose. Note the number of threads that are visible.

3.3.5 Electronics sensors/transducers. The Contractor must inspect the general condition of the fathometer transducer. Record condition of rubber coating and amount of marine growth present. Note in the inspection report any cuts, gouges, or other surface defects found. See Table 7 Transducer Well Particulars.

3.3.6 Cathodic protection system. The Contractor must visually inspect all reference cells, anodes, and zinc anodes. Check the soundness of mounting strap and stud welds, missing fasteners, and percentage of remaining material.

3.3.7 Operational test-post repair. After completion of work and in the presence of the Coast Guard Inspector, the Contractor must witness an operational test (by Coast Guard personnel, including C5ISC personnel) of the equipment listed below to demonstrate satisfactory operational condition. Submit a CFR.

- Transducers

NOTE

Coast Guard personnel will operate all shipboard machinery and equipment.

3.4 Inspection documents. The Contractor must document the hull survey as follows :

3.4.1 Written report. The Contractor must record the U/W body coating system fouling rating on the attached "Pre-Clean Bio-fouling Inspection Data" Form.

3.4.1.1 Note all inspection findings and observations, as applicable, on attached observations on the following attached inspection data forms, as applicable, on the attached : "Diver Hull Inspection Data" Form.

3.4.1.2 In addition to completing the "Diver Hull Inspection Data" Form, do the following, as applicable:

- Document condition of running gear on attached "Running Gear Inspection Data" Form for each shaft.
- Document propeller condition on attached "Propeller Inspection Data" Form for each propeller.
- Document condition of rudders on attached "Starboard and Port Rudder Data Inspection" Form.

3.4.2 Audio-video report. In addition to the written documentations specified above, the Contractor must produce an audio-video report, with narration, of all inspected surfaces. Place linear measuring devices, as applicable, in the field of view when videotaping hull damages, to provide scale for these damages.

3.4.3 Documentation submission. Within 24 hours after the completion of the diver inspection, the Contractor must do as follows :

3.4.3.1 Submit a CFR indicating the amount of recommended U/W body surface cleaning, if any.

3.4.3.2 Submit both, the written and audio-video reports to the COR. Submit the audio-video report

formatted to USCG requirements via DOD safe link..

3.4.3.2.1 Ensure that all video equipment has the following characteristics/functions:

- Remote video/sound recorder
- Suitability for underwater use
- Auto-focus and auto-exposure
- Color pictures
- Two-way communication devices, to allow for communication and recording of communications between the diver operating the video camera and the Person-in-Charge, the COR, and the Coast Guard Inspector
- Audio/visual cables long enough to transmit the video picture and two-way communications to the recorder and monitor
- Online video monitor large enough, to allow the Person-in-Charge, the COR, and the Coast Guard Inspector to observe the video picture
- Sufficient lighting to ensure a quality color video picture and depth of field
- A yardstick or other suitable linear measuring device with clear measurement marks which can be read from the monitor

3.4.3.2.2 Closely monitor the video and sound quality during the survey, to ensure that the pictures on the monitor and the communication sounds remain of high quality. When either video or audio quality deteriorates, ensure that the survey is temporarily halted, until all problems have been corrected.

4. NOTES

4.1 Unit responsibilities. The ship's force will tag-out and secure as follows :

- All propulsion machinery and shafting, including auxiliary propulsion machinery such as the bow thruster, and all steering machinery whenever the diver is in the water.
- All underwater body transducers, including the sonar equipment, for the duration of the underwater inspection operation.
- All active cathodic protection equipment for the duration of the underwater inspection operation.
- Each sea suction while the diver is inspecting the sea suction's sea chest strainer.

4.2 Mailing of video record. Upon receipt, the COR will forward the second copy of the underwater video inspection record to the Engineering Section of the Product Line Division to which the vessel is assigned.

TABLE 3 PRE-CLEAN BIOFOULING INSPECTION DATA

PRE-CLEAN BIOFOULING INSPECTION DATA			
VESSEL NAME:	HULL TYPE / NUMBER	LOCATION (CITY)	DATE (mm/dd/yy)
PRODUCT LINE:	INSPECTING ACTIVITY		VISIBILITY (ft)
LOCATION OF LAST DRYDOCKING			UNDOCKING DATE
LOCATION OF LAST PAINTING			DATE
PAINT TYPE: ANTIFOULING: ANTICORROSION:			
DATE OF THE LAST WATERBORNE FULL HULL CLEANING	DATE OF THE LAST WATERBORNE INTERIM CLEANING		
UNDERWATER PHOTOGRAPHS TAKEN ☐ YES ☐ NO	VIDEO TAKEN ☐ YES ☐ NO		

COMPONENTS	(CHECK IF:) N/A NOT INSPECTED		(PERCENTAGES MUST ADD UP TO 100) FOULING RATING FOULING RATING FOULING RATING		
PROPELLER Centerline			FR- %	FR- %	FR- %
Port Outboard			FR- %	FR- %	FR- %
Port Inboard			FR- %	FR- %	FR- %
Starboard Inboard			FR- %	FR- %	FR- %
Starboard Outboard			FR- %	FR- %	FR- %
SHAFT Centerline			FR- %	FR- %	FR- %
Port Outboard			FR- %	FR- %	FR- %
Port Inboard			FR- %	FR- %	FR- %
Starboard Inboard			FR- %	FR- %	FR- %
Starboard Outboard			FR- %	FR- %	FR- %
RUDDER Centerline			FR- %	FR- %	FR- %
Port			FR- %	FR- %	FR- %
Starboard			FR- %	FR- %	FR- %
SONAR DOME Port Side			FR- %	FR- %	FR- %
Starboard Side			FR- %	FR- %	FR- %
SEA CHEST Typical			FR- %	FR- %	FR- %
BOW Port			FR- %	FR- %	FR- %
Starboard			FR- %	FR- %	FR- %
SIDES Port			FR- %	FR- %	FR- %
Starboard			FR- %	FR- %	FR- %
BOTTOM Port			FR- %	FR- %	FR- %
Starboard			FR- %	FR- %	FR- %
STERN Port			FR- %	FR- %	FR- %
Starboard			FR- %	FR- %	FR- %
TRANSOM Port			FR- %	FR- %	FR- %
Starboard			FR- %	FR- %	FR- %

Signature (Ship's Engineer):_____

Signature (Diving Supervisor):_____

TABLE 4 DIVER HULL INSPECTION DATA

DIVER HULL INSPECTION DATA

VESSEL NAME:	HULL TYPE / NUMBER	LOCATION (CITY)	DATE (mm/dd/yy)
PRODUCT LINE:	INSPECTING ACTIVITY		VISIBILITY (ft)
LOCATION OF LAST DRYDOCKING			UNDOCKING DATE
LOCATION OF LAST PAINTING			DATE

PAINT
TYPE: ANTIFOULING: ANTICORROSION:

DATE OF THE LAST WATERBORNE FULL HULL CLEANING	DATE OF THE LAST WATERBORNE INTERIM CLEANING
UNDERWATER PHOTOGRAPHS TAKEN ☐ YES ☐ NO	UNDERWATER COLOR VIDEO TAKEN ☐ YES ☐ NO

UNDERWATER WORK ACCOMPLISHED THIS DATE

☐ FULL CLEAN ☐ POLISH ☐ MULTI-BRUSH ☐ INSPECT ☐ PAINT

☐ INTERIM ☐ HYDRO ☐ HAND-HELD ☐ REPAIR ☐ OTHER_____

1. HULL COATING SYSTEM (PDR_____)

a. ANTIFOULING PAINT

PERCENTAGE REMAINING_____ PERCENT REJUVENATION_____

IS THE A/F ☐ HARD ☐ SOFT

PERCENTAGE _____ PEELING _____ LOCALIZED or _____ GENERAL
_____ BLISTERING _____ LOCALIZED or _____ GENERAL
_____ ABRASION _____ LOCALIZED or _____ GENERAL

CONDITION SUMMARY [IF PAINT DAMAGE IS LOCALIZED, GIVE LOCATION(s)]

_____

_____

b) ANTICORROSION PAINT

PERCENTAGE REMAINING _____

PERCENTAGE _____ PEELING _____ LOCALIZED or _____ GENERAL
_____ BLISTERING _____ LOCALIZED or _____ GENERAL
_____ ABRASION _____ LOCALIZED or _____ GENERAL

CONDITION SUMMARY [IF PAINT DAMAGE IS LOCALIZED, GIVE LOCATION(s)]

_____

_____

_____

____

c) DOCKING BLOCK AREAS (PDR _____)

AVERAGE PERCENTAGE OF BLOCK AREAS PAINTED _____ %

BARE METAL PITTING _____ % _____ IN. DIAMETER _____ IN. DEEP

CONDITION SUMMARY [IF PAINT DAMAGE IS LOCALIZED, GIVE LOCATION(s)]

_____

_____

TABLE 5 DIVER HULL INSPECTION DATA (CON'D)

DIVER HULL INSPECTION DATA (CONTINUED)

2. CATHODIC PROTECTION SYSTEM

a. SACRIFICIAL ANODES (ZINCS)

AVERAGE PERCENTAGES OF ANODES REMANING _____ %

ANODES ARE: ☐ UNIFORMLY WASTED ☐ WASTAGE GREATEST IN FOLLOWING AREAS:

_____

_____

ANODES ARE : ☐ WELDED ☐ BOLTED ☐ BOTH

NUMBER AND LOCATION OF ANY ANODES MISSING OR INACTIVE:

MISSING _____

_____

INACTIVE _____

_____

b. IMPRESSED CURRENT

☐ DAMAGE NOTED ON ATTACHED DRAWING (Port/Stbd) (FRAME _____)

☐ WIRES LOOSE, BROKEN, OR MISSING (Port/Stbd) (FRAME _____)

☐ CAPASTIC SHIELD DAMAGE (Port/Stbd) (FRAME _____)

☐ INSULATORS LOOSE OR DAMAGED (Port/Stbd) (FRAME _____)

☐ OTHER (Port/Stbd) (FRAME _____)

3. GENERAL HULL DAMAGE (HULL PLATING, BILGE KEELS, etc.):

_____

_____

_____

4. HULL PENETRATIONS (PDR _____)

_____ % CLOGGED WITH MARINE GROWTH (POST CLEAN)

_____ % BARE METAL (AREA SURROUNDING PENETRATION)

_____ % BARE METAL PITTING

AVERAGE PIT SIZE: _____ in. DIAMETER, _____ in. DEPTH

CONDITION SUMMARY: _____

_____

TABLE 6 DIVER HULL INSPECTION DATA (CON'D)

DIVER HULL INSPECTION DATA (CONTINUED)

5. SONAR DOME

☐ **NO VISIBLE DAMAGE** ☐ **DAMAGE NOTED ON ATTACHED DRAWING** ☐ **CUTS** ☐ **LAYER SEPARATION** ☐ **WIRE PILES EXPOSED**

6. PROPULSION SHAFTING

VISIBLE BARE METAL ☐ YES ☐ NO RUST BLEEDING ☐ YES ☐ NO PITTING ☐ YES ☐ NO

CONDITION SUMMARY (TYPE OF DAMAGE, LOCATION AND SIZE):

_____

_____

7. STRUTS AND BEARING HOUSING

PERCENT BARE METAL:	STARBOARD	PORT
MAIN	_____ %	_____ %
INTERMEDIATE	_____ %	_____ %
PDR	_____	_____

CONDITION OF STRUT LEADING AND TRAILING EDGES: _____

_____

_____

CONDITION OF ROPE GUARDS: _____

_____

_____

CONDITION OF FAIRWATERS: _____

_____

8. RUDDER

□ NO DAMAGE □ DAMAGE SHOWN ON ATTACHED DRAWINGS

	STARBOARD	PORT
PERCENT BARE METAL	%	%
PDR		
ACCESS PLATES INTACT?	☐ YES ☐ NO	☐ YES ☐ NO
WAS RUDDER SOUNDED?	☐ YES ☐ NO	☐ YES ☐ NO
ANY SIGNS OF FLOODING?	☐ YES ☐ NO	☐ YES ☐ NO
ANY SIGNS OF DROPPING?	☐ YES ☐ NO	☐ YES ☐ NO

CONDITION SUMMARY:

_____

_____

9. PROPELLERS

☐ NO DAMAGE ☐ DAMAGE SHOWN ON ATTACHED DRAWINGS

PROP #1:	NICKS _____	CURLS _____	CRACKS – LARGEST CRACK LENGTH _____ in.
PROP #2:	NICKS _____	CURLS _____	CRACKS – LARGEST CRACK LENGTH _____ in.
PROP #3:	NICKS _____	CURLS _____	CRACKS – LARGEST CRACK LENGTH _____ in.
PROP #4:	NICKS _____	CURLS _____	CRACKS – LARGEST CRACK LENGTH _____ in.

PROPELLERS NUMBERED STARBOARD TO PORT.

Diving Supervisor: _____

Ship's Engineer: _____

TABLE 7 TRANSDUCER WELL PARTICULARS

APPLICATION	TRANSDUCER(S)	LOCATION(S)
EM 304 Receiver	Receivers	Frames 54-56 Centerline
SBP 120 (29) Transmitter	Transmitters	Frames 63.5-75.5 Starboard
EM 304 Transmitter	Transmitters	Frames 63.5-75.5 Port
Bathy-2000 Subsurface Profiler	TR-109 (16 transducers) Ocean Data Equipment TC-12/34	Frame 58 starboard (3.5 kHz) Frame 60 port (12 kHz)
Digital Survey Fathometer 6000 (now Bathy-1500)	Ocean Data Equipment TC-12/34	Frame 60 starboard
Acoustic Doppler Current Profiler	RD Instruments XV-150 RD Instrument XV-75 shown as XV-300 on CG drawings	Frame 58 port (150 kHz) Frame 59 port (75 kHz)
Spare	None installed None installed	Frame 62 starboard Frame 62 port

PROPELLER INSPECTION DATA

USS	HULL NO.	LOCATION	DATE

☐ PORT ☐ STBD ☐ CENTERLINE ☐ INBD ☐ OUTBD

INDICATE ALL DAMAGE ON BLADES (i.e., BENDS, CRACKS, HEAVY EROSION, etc.)

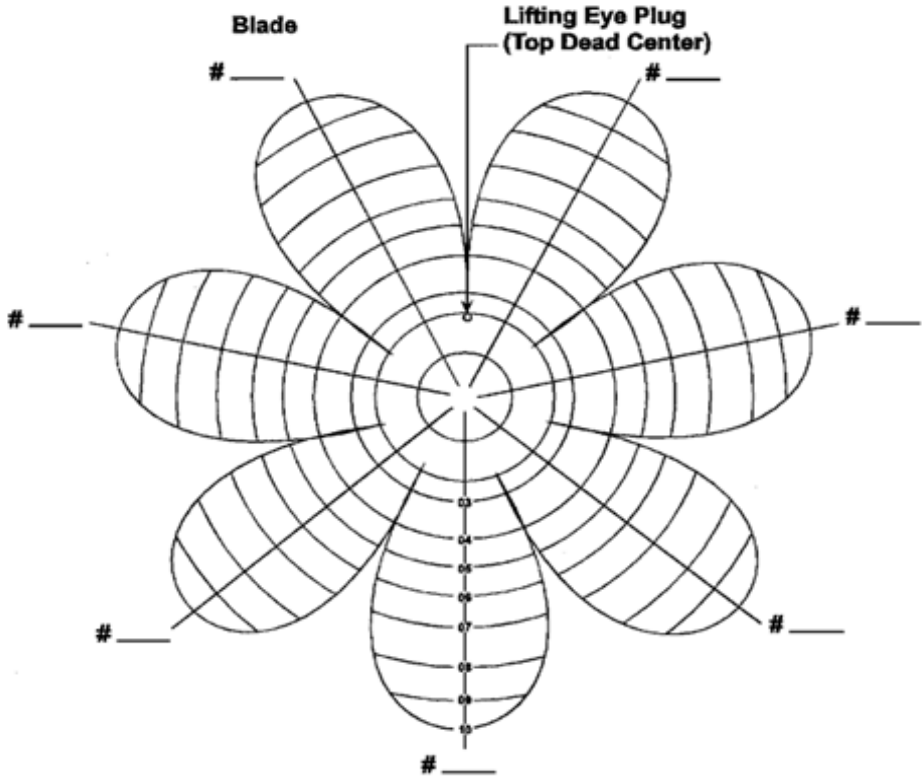

PROPELLER INSPECTION RESULTS (AVERAGE ROUGHNESS ★)

BLADE NUMBER	1	2	3	4	5	6	7
PRE POLISH							
POST POLISH							

CONDITION SUMMARY: _____

_____

_____

_____

* ALL FOULING TO BE REMOVED BEFORE ROUGHNESS READINGS OBSERVED. USE SAME LETTERS AS ON RUBERT COMPARATOR TO SHOW ROUGHNESS. AN AVERAGE OF TEN READINGS FOR EACH SIDE OF BLADE RECOMMENDED.

NOTE: BLADES ARE NUMBERED COUNTER TO THE DIRECTION OF FORWARD ROTATION WITH BLADE NUMBER ONE BEING THE BLADE ADJACENT TO THE LIFTING EYE PLUG.

NAVSEA 4730/6 0116-LF-047-3035 SHEET 1 OF 1

FIGURE 1 PROPELLER INSPECTION DATA

STARBOARD RUNNING GEAR INSPECTION DATA

	HULL NO.	LOCATION	DATE

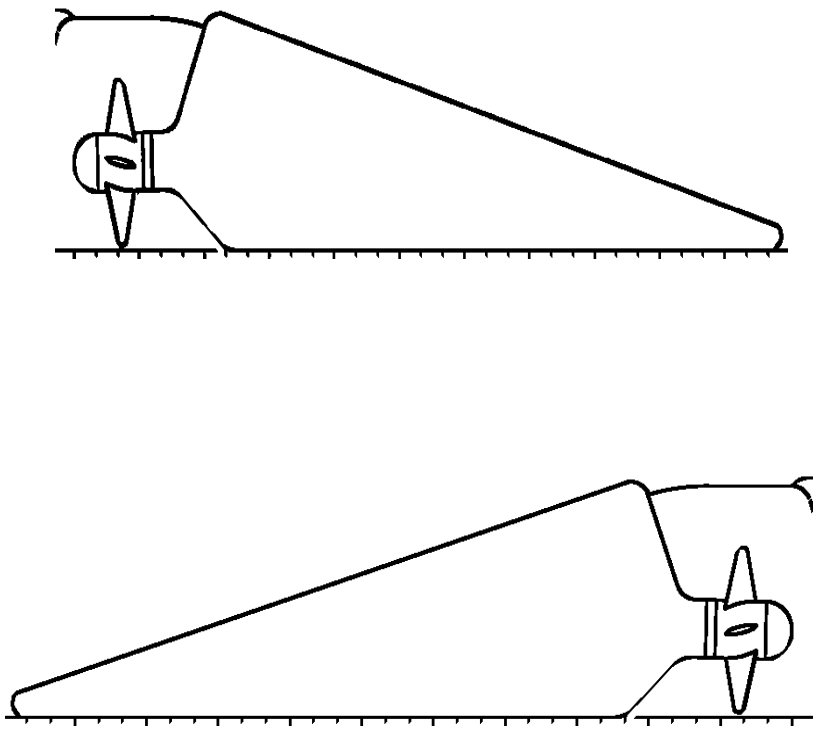

FIGURE 2 SAMPLE STARBOARD RUNNING GEAR INSPECTION

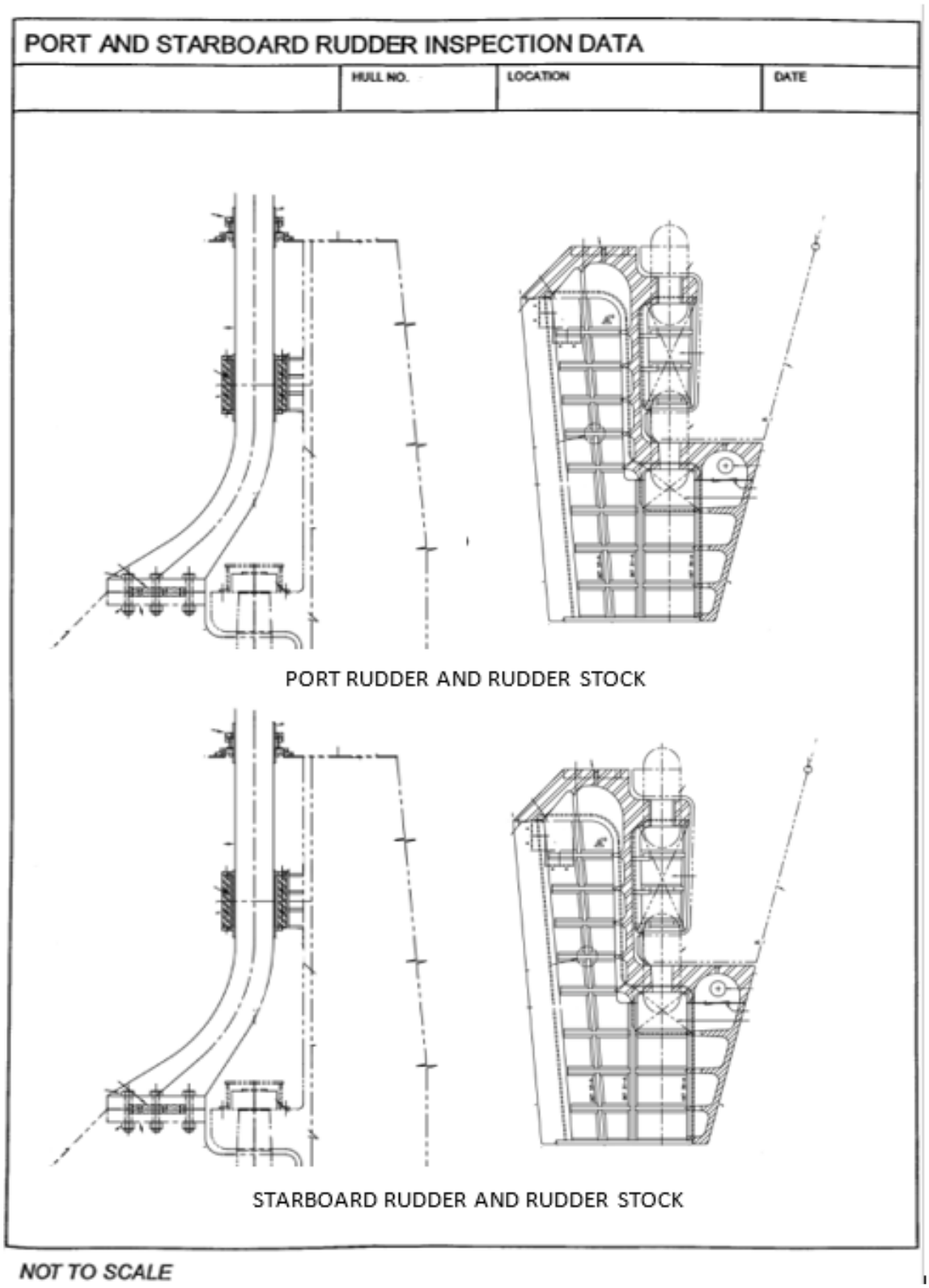

FIGURE 3 SAMPLE STARBOARD AND PORT RUDDER INSPECTION

WORK ITEM 47: Deck Covering (Slip-Resistant) Forecastle Deck, Renew

1. SCOPE

1.1 Intent. This work item describes the requirements for the Contractor to renew deck covering with slip-resistant deck covering system (MIL-PRF-24667D Type V Comp. G/D/L Non-skid) for areas as listed in Table 1.

TABLE 1 SLIP-RESISTANT DECK COVERING

LOCATION	COMPO	AREA (SQFT)*	SYSTEM/APPENDIX (SFLC STD 6310)	TOPCOAT COLOR	PRESERVE LEVEL	NOTE
Fore Deck (Forecastle Deck)	Deck, Platforms	4,790	Weather Decks (Weather Deck Non-Skid, MIL-SPEC Coating for Steel)	Dark Gray 36076 Match existing adjacent surfaces	Full	MIL-PRF-24667D Type V Comp. G/D/L Non-skid

***Approximated**

1.2 Government-furnished property.

None.

2. REFERENCES

COAST GUARD DRAWINGS

Coast Guard Drawing 420-WAGB 801-1, Rev -, Booklet of General Drawings

COAST GUARD PUBLICATIONS

Coast Guard Commandant Instruction (COMDTINST) M10360.3 (Series), Coatings and Color Manual

Surface Forces Logistics Center Standard Specification 0000 (SFLC Std Spec 0000), 2022, General Requirements

Surface Forces Logistics Center Standard Specification 0740 (SFLC Std Spec 0740), 2022, Welding and Allied Processes

Surface Forces Logistics Center Standard Specification 6310 (SFLC Std Spec 6310), 2022, Requirements for Preservation of Ship Structures

OTHER REFERENCES

Commercial Item Descriptions (CID) A-A-59316, Nov 2003; Abrasive Materials for Blasting

MIL-A-22262, Mar 1996, Abrasive Blasting Media Ship Hull Blast Cleaning

MIL-PRF-24667, Jun 2005, Coating System, Non-Skid, For Roll or Spray Application

The Society for Protective Coatings (SSPC) Surface Preparation Specification No.3 (SSPC-SP 3), 2004, Power Tool Cleaning

3. REQUIREMENTS

3.1 General.

3.1.1 CIR. The Contractor must submit a CIR for the inspections listed in the following paragraph(s) :

- 3.3 Operational test – initial
- 3.4 Inspection

3.1.2 Tech Rep. The Contractor must provide the services of a qualified and certified Tech Reps and personnels as follows :

- NDE Tech Rep : NDE Operator/Level 1
- Preservation Tech Rep : AMPP Senior Certified Coatings Inspector (NACE CIP Level 3/SSPC PCI Level 3) with Marine Coatings Inspection Specialty

3.1.2.1 NDE Tech Rep. The Contractor must provide the services of a qualified and certified NDE Operator/Level 1 as follows:

- Perform NDE Operations.

3.1.2.1.1 Qualifications/certifications. NDE Operator/Level 1 certified and qualified in accordance with ASNT No. SNT-TC-1A. Submit the Tech Rep's qualifications/certifications to the COR at the Arrival Conference.

3.1.2.1.2 Dates of services. Include the dates of services in which Tech Reps must be on site as per their subcontract documentation.

3.1.2.2 Preservation Tech Rep. The Contractor must provide the services of a Certified Coating Inspector having successfully completed relevant AMPP (NACE/SSPC) Programs and Trainings to:

- Serve as an Independent Coating Tech Rep.
- Accomplish applicable requirements in SFLC Std Spec 0000, Paragraph 3.2.4.2.2 (Coating Tech Rep).
- Oversee the Preservation Plan requirements in SFLC Std Spec 6310, Paragraph 3.2 (Preservation plan).
- Review and sign daily reports summarizing work. See forms QA-1 thru QA-5 provided in the General Requirements.
- Submit reports to the COR within 24 hours of each inspection.

3.1.2.2.1 Qualifications/certifications. Submit the Coating Tech Rep's qualifications/certifications in accordance with SFLC Std Spec 0000, 3.2.4.2.2.3 and 3.2.4.2.4, include name, certificate number and documented completion of relevant AMPP (NACE/SSPC) Courses and Exams.

3.1.2.2.2 Submit the name and the certification of the Tech Rep to the COR at the Arrival Conference. Include the dates of services the Qualified Tech Reps will be on site as per their subcontract documentation.

3.1.3 Protective measures. The Contractor must furnish and install all protective measures in accordance with SFLC Std Spec 0000, paragraph 3.3.3 (Vessel component, space, and equipment protection).

3.1.3.1 Specific protections. Specific areas/equipment/components to be protected include, but are not limited to:

- Machinery and equipment (e.g. firefighting systems)
- Ventilation systems (e.g. ventilation inlets/outlets, and trunks)
- Ready service lockers
- Wash down counter measure fittings
- Drains, covers, and plugs
- Closures (e.g. doors, hatches and scuttles)

3.1.3.2 Inspection of integrity. Inspect the integrity of the protective covering at the beginning of each shift where surface preparation and/or painting will be accomplished. Ensure that equipment and machinery have not been infiltrated by contamination. Clean any contamination and repair any defects in the protective covering prior to continuing work.

3.1.3.3 Watertight closures. Close all weather tight closures in the vicinity of the work area or install double curtain baffles at the entrance of each access door where airborne contamination could occur during surface preparation and painting. Double curtain baffles are necessary at all closures that will be in use during the preservation process. Install a dirt collection mat on the deck directly inside each closure.

3.1.3.4 Drainage. Plug or cover all deck supply and discharge, drainages, and fastener holes to prevent entry of blast grit or debris.

3.1.3.5 Wash down counter measure (CMWD). Cover CMWD nozzles (i.e. NAVSEA Dwg 803-1385828) to prevent entry of blast grit or debris using the following:

- Fender Washer (i.e. Carbon Steel, SAE J403H (1008-1020), UNS G10080-G10200, Zinc Plated)
- Machine Screw (Stainless, Type 18-8, must comply with ANSI-B18.6.3 Slotted, Trusshead. Full form threads are to extend to within 0.050 inch of the head bearing surface).

NOTE

The CMWD nozzle coverings are Parts 4 and 5 in NAVSEA Drawing No 803-1385828.

3.1.4 Interferences. The Contractor must handle all interferences in accordance with SFLC Std Spec 0000, Paragraph 3.3.5 (Interferences). Known interferences include, but are not limited to the following :

- Weapons and controls (e.g. removable components/parts)
- Machinery and equipment (e.g. removable components/parts)
- Ventilation systems, and components (e.g. removable components/parts)
- Ready service lockers
- Drains, covers, and plugs
- Closures (e.g. doors, hatches and scuttles)
- Rails and supports
- Ladders and supports

- Outfits, foundations, and fittings (e.g. chocks, cleats, cat paws)
- Switches, controls, and terminals
- Lights, alarms, cameras, speakers, sensors, switches, and supports
- Piping, hoses, and supports
- Cables, wires, and supports

NOTE

Coast Guard personnel will coordinate to remove all pyrotechnics from ready service lockers prior to commencement of the works.

3.1.5 Work locations. The concerned work areas are listed in Table 1. See the applicable drawings in section 2 for guidance, locations, and details.

3.1.6 Materials, tools, and services. The Contractor must provide materials, tools, and services to accomplish the requirements in this work item. New components, parts, materials, and paints with the same color, comparable and matching material properties as the existing components/parts. Use references in Sections 1, 2 and SFLC Std Specs for guidance, required materials, and details.

3.1.7 Water used for washing and surface preparation procedures. The Contractor must ensure that water used in all washing and surface preparation tasks (including pre-surface preparation wash, and wet abrasive blasting) is in accordance with SSPC/NACE Standards regarding to WJs or WABs. The water used must be sufficient purity and quality, and must not prevent the surface being cleaned from achieving the required degree of surface cleanliness or non-visible contamination criteria.

- Ensure that surface preparation water does not contain sediments or other impurities that are destructive to the proper functioning of the cleaning equipment.
- Ensure that all water used in any surface preparation or cleaning procedures is captured, contained, and all spent water disposed of in accordance with all federal, state and local regulations.
- Notify the COR within 5 days prior to the removal of accumulated water storage from the Coast Guard Base where work is being conducted.

3.1.8 Surface preparation optional methods. The Contractor has the option of using either “Wet Abrasive Blasting” or “Dry Abrasive Blasting” to achieve the required surface preparation, prior to application of the coating system specified in preservation requirements.

- Achieving greater productivity
- Achieving the required surface profile

3.1.9 Work coordination. The Contractor must coordinate the accomplishment of this work item with the following work items :

- Tenting (Fore Deck), Provide

3.2 Quality assurances and controls. The Contractor must abide by all the safety, preservation, and quality control requirements specified in SFLC Std Spec 0000, Paragraph 3.2.4.2 (In-process QC measures for “critical-coated surfaces”), and the quality controls specified in SFLC Std Spec 6310, Paragraph 3.1.10 (Coating inspection) and 3.1.15 (Coating system tests).

NOTICE

Surfaces being renewed/preserved are considered “critical-coated surfaces”.

3.3 Operational test – initial. Prior to commencement of work, the Contractor must witness Coast Guard personnel perform an initial operational test of the equipment listed below to demonstrate existing operational condition. Submit a CIR.

- Deck machinery and equipment
- Drain systems and piping

NOTE
Coast Guard personnel will operate all shipboard machinery and equipment.

3.4 Inspection. In presence of the Coast Guard Inspector and as designated by the COR, the Contractor must inspect all cleaned surfaces and exposed substrates of areas in Table 1 (after removing/cleaning surface covering/coatings and prior to priming substrates) in accordance with SFLC Std Spec 0740. Submit a CIR.

3.4.1 Visual inspection (VT). The Contractor must visually inspect all exposed deck areas for any pitting, corrosion, erosion, defects, and damages.

3.4.1.1 Initial deck condition. Include the description of the initial deck condition as outlined below.

- Written, Visual or Pictorial Representation including measurements and locations of intended differentiating surface preparation levels and coating systems (i.e. stripe coating application (SFLC Std Spec 6310, 3.1.1 Stripe coat application)) over the original coating system using chalk or chalk based marking instrument

3.4.1.2 Sketching and marking. Prior to removal of any coatings, use photography, drawings and sketches as needed to document markings and lettering on affected areas. After application of deck covering, the markings and lettering must be restored as indicated on paragraph 3.7 Deck weapon, safety, and other markings.

- Visual or Pictorial Representation including measurements and locations of slip-resistant exempt surfaces (a.k.a. exempted areas/waterways) and Deck weapon, safety, and other markings (paragraph 3.7 Deck weapon, safety, and other markings) of the original coating system.

3.4.2 Pit measurement. The Contractor must take 400 pit measurements using a Contractor supplied 'Pit Gauge' in accordance with SFLC Std Spec 0740, Paragraph 3.13 (Evaluation of pitting corrosion). The results of these measurements must be included in the inspection report, showing where pit measurements are taken and the depth of the pit.

NOTE
Pit measurements must be taken on cleaned/exposed substrates in accordance with SFLC Std Spec 0740 (in accordance with ASTM G46 via SFLC Std Spec 0740)

3.4.3 Ultrasonic test (UT). The Contractor must take 1600 UT measurements for determining suspected cracks and remaining substrate thicknesses in accordance with SFLC Std Spec 0740, Appendix C. The results of these measurements and the locations where they are taken must be included in the inspection report.

- UT for cracks. Take UT measurements along suspected cracked substrates/discontinuities to determine their boundaries.
- UT for thickness measurement. Take UT shots in the surrounding area of any pit measuring

greater than 25% of plate thickness. UT shots must be taken in the four quadrants at an equal-distant radius from the pit center until full plate thickness is measured.

3.5 Substrate filling and fairing by epoxy for shallow pits and small corrosions (i.e. pits < 25% or corrosions < 25%). The Contractor must fill small pin holes, shallow pitted substrates (with remaining plate thicknesses over 75% of required plate thicknesses), and fair corroded substrates (with remaining cross sections over 75% of required cross section areas), with epoxy to delay further corrosions, after removing insulation, surface covering, and/or coating in accordance with SFLC Std Spec 6310, Appendix A (Cutter and Boat Exterior Painting Systems), "Metal Repair and Hull Smoothing", MIL-PRF-24176, and manufacturers' instructions.

- Procure 4 kits of approved fairing compound epoxy 0.5 Gallon/5 Kg Kit or equivalent) to conduct repairs.
- Apply remaining epoxy over high corrosion and erosion areas. (e.g. substrates repaired by clad welding, corners, edges, sills, welding seams, and high contact surfaces)

3.6 Slip-resistant deck covering renewal. The Contractor must prepare and coat the deck surfaces, using the system specified in SFLC Std Spec 6310, Appendix A (Cutter and Boat Exterior Painting Systems). Apply finish/top coat to match existing adjacent surfaces. Select options as follows :

- Weather Decks (Weather Deck Non-Skid, MIL-SPEC Coating for Steel) (MIL-PRF-24667 Type V Comp. G/D/L)
- Near-White Metal Wet Abrasive Blast Cleaning SSPC-SP 10 (WAB)/NACE WAB-2, and
- Power Tool Cleaning to Bare Metal (SSPC-SP 11) for all deck covering and coating defects, outfits/fittings, and limited access areas

NOTES

1. Strength decks' substrates (e.g. Decks at Sides from Fore Deck through Flight Deck) are constructed of HY-AH-36 or HSLA-80 steel and may NOT be heated to remove the existing covering.

2. Initial removal of the coating system around deck edges, fittings, and deck coaming may be started by power tool cleaning in accordance with SSPC-SP-11.

3. Surface preparation may be accomplished by wet abrasive-blasting, or dry abrasive-blasting, or a combination of the two.

4. Unless a containment system is used to contain surface preparation for dust and debris and coating application overspray during pier side/dockside preservation, the following must be adhered to:

a. All surface preparation tools/equipment must be vacuum-shrouded.

b. Coatings must be applied by brushing or rolling.

5. During pier side surface preparation :

- Suitable means to contain generated dust, waste water, paint chips, spent abrasives, and overspray must be provided or employed, as applicable.

- Plywood or net/canvas barriers are typically used to surround the area being blasted to contain stray steel shot.

- When net barriers are used, the mesh size of the netting material must be small enough to ensure that the steel shot will be contained.

- In addition, net barriers, when used, must be overlapped where attached to stanchions, and anchored at the bottom for the entire net's length between stanchions, to limit the clean–up and localize the blast medium.

- Steel shot on a deck is a foreign object damage (FOD) hazard and extreme care must be taken to prevent slipping when walking over contaminated areas.

3.6.1 Pre-surface preparation wash. Prior to accomplishing surface preparation, the Contractor must accomplish low-pressure (less than 5,000 psi) fresh water wash of all affected surfaces, to remove soluble chlorides and other surface contaminants. Capture, contain, and dispose of wash water for proper disposal in accordance with all federal, state and local regulations.

3.6.2 Preparation. The Contractor must clean the entire deck areas including foundations, outfits, coaming, and fittings (e.g. wash down counter measure, deck edges, foundations, coamings, outfits, and fittings) up all coaming heights and up to 6 inches above decks in accordance with :

- Near-White Metal Wet Abrasive Blast Cleaning SSPC-SP 10 (WAB)/NACE WAB-2, and
- Power Tool Cleaning to Bare Metal (SSPC-SP 11) for deck covering or coating defects, and limited access areas (including deck edges, foundations, coamings, outfits, and fittings)

3.6.3 Coating. The Contractor must coat slip-resistant deck covering (MIL-PRF-24667, Type V Comp G/D/L) on deck. The coating system will be completed as follows :

- Primer Coats
- Stripe Coats on Welds and Seams – Stripe coat must be of a different color than the primer coat
- Intermediate Coats
- Non-Skid
- Top Coat (Areas adjacent to Non-Skid)

3.6.3.1 Slip-resistant surfaces. Select Dark Gray 36076 as the top/finish coat color. Must not top-coat slip-resistant surfaces. Ensure that the slip-resistant surface appearance and texture show a pattern of ridges and peaks as follows :

- The ridge profile must be continuous and reasonably uniform.
- Peaks and ridges must be generally in the same direction (fore and aft), approximately 1/2 to 1 inch apart, and approximately 1/16 to 3/32 inches high.
- All weld seams must be cross-rolled from a minimum of 3 inches on either side of the weld.

3.6.3.2 Slip-resistant exempted surfaces. Apply Dark Gray 36076 or top/finish coats matching adjacent surfaces instead of slip-resistant deck covering on exempted surfaces (no slip-resistant deck covering) over vertical surfaces and areas as follows :

- Areas within six inches of adjacent bulkheads, deck coaming, and deck edges.
- Areas within two inches of deck foundations, deck fittings, welds, and protrusions. (two inches measured from outermost portion of foundation, for example, foundation brackets on anchor windlass)
- Decks inside coamings
- Deck fittings, including, but not limited to: pad eyes, label plates, net supports/foundations (e.g. drain heads/cups)

- Deck troughs (e.g. stuffing tubes, risers, and flanges)
- Exempted surfaces or stripes as designated by the COR.

3.6.3.3 Other adjacent surfaces. Preserve all bulkheads, foundations, outfits, coaming, and fittings including all adjacent structural members up all coaming heights and up to 6 inches above deck. Include specific surface areas as follows :

- Fore deck : all gun mount/foundation (up to ~18 inches above deck)
- Any coating damages due to the Contractor's works

3.7 *Deck weapon, safety, and other markings*. The Contractor must paint all deck weapon, safety, and other markings to restore them to original conditions in accordance with SFLC Std Spec 6310, COMDTINST M10360.3 (Series), Chapter 5 Cutter and Boat Safety Colors and Markings, and NAVSEA OP 4, Rev 10, Ammunition And Explosives Safety Afloat. Deck markings include, but are not limited to :

3.7.1 *Danger stand clear of launcher deck area*. For launcher areas, a "DANGER STAND CLEAR OF LAUNCHER DECK AREA" sign must be conspicuously located on each side of the launcher deck. These signs must be stenciled in 2-inch white letters centered on a red, rectangular background. The red background height and width will be determined by the particular ship's available deck area.

3.7.2 *Danger circles*. Establish a danger circle around power-driven systems, such as gun mounts, turrets, gun/missile directors and missile launchers. The circles must meet the following requirements :

The danger area must be encircled by a painted red line, 4 inches wide. The inside of the red line must be approximately 18 inches from the maximum rotating projection of the armament.

The danger area must be labeled by painting the words "DANGER AREA" in 2-inch high white letters, centered within the 4-inch wide red circle line described in subparagraph a. The words "DANGER AREA" must be repeated around the circle every 4 feet.

All ship's structures that come in contact with the 4-inch wide red line and vertical extension of the line to a height of 7 feet must be labeled with the words "DANGER AREA" by painting 2-inch high red letters, centered on the area, and its extremities at a height of 5 feet from the deck. The danger circle markings must be extended to adjacent horizontal or near-horizontal surface where personnel could potentially stand or sit. It is not required to connect the arc across vertical surfaces to form a continuous connected circle.

If the danger circle falls inside of or on a gun tub enclosure, the outside of the enclosures must be labeled by painting a 4-inch wide danger circle with 2-inch high letters spelling "DANGER CIRCLE" centered in the circle line. The top of the danger circle must be in line with the upper edge of the gun tub and must be painted as described in subparagraphs b and c.

3.8 Touch-up preservation. The Contractor must prepare and coat all new and disturbed surfaces to match existing adjacent surfaces in accordance with SFLC Std Spec 6310, Paragraph 3.1.13 (Touch-ups and minor coating repairs).

3.9 Operational test-post repair. After completion of work, the Contractor must witness Coast Guard personnel test all items or shipboard devices that have been disturbed, used, repaired, altered, or installed to demonstrate satisfactory condition. Submit a CFR.

- Deck machinery and equipment

- Drain systems and piping

NOTE
Coast Guard personnel will operate all shipboard machinery and equipment.

3.10 Washing. Upon completion of works and in presence of the Coast Guard Inspector, the Contractor must remove and dispose of all debris from surfaces, remove drain plugs, and clean out all deck and drains with low-pressure water, then demonstrate that all drains run free and clear.

3.11 CFR. The Contractor must summarize and submit a CFR if additional repair is necessary or required.

4. NOTES

4.1 FIGURE 1.

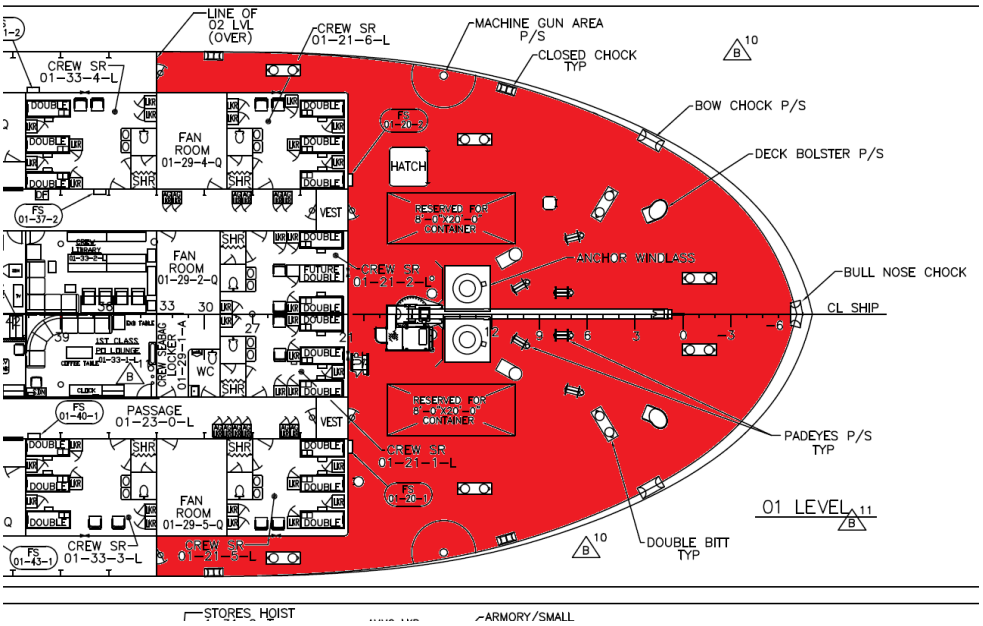

FIGURE 4, WORK LOCATION, PRESERVATION AREA (APPROXIMATE)

WORK ITEM 48: Deck Covering (Insulating), Replace

1. SCOPE

1.1 Intent. This work item describes the requirements for the Contractor to replace existing insulating decks (incl. decks inside coamings) with Deck Covering (Insulating) System (i.e. instead of Magnesite), and renew all slip-resistant treads in compartments as listed in Table 1.

TABLE 1 DECK COVERING SYSTEMS IN COMPARTMENTS

LOCATION	DECK MTL	AREA (SQFT)*	SYSTEM/APPENDIX (SFLC STD 6341)	SYSTEM COLOR	NON-SKID**	NOTE
AMR # 5 2-63-0-E	Steel	1,500	Polymeric Epoxy Resin, Type I, Class 2/Appx A	Gray/Bilge Red	4 sets	Renew with Standard Weight Underlayment Type I/II Class 2
AMR # 6 2-75-0-E	Steel	1,500	Polymeric Epoxy Resin, Type I, Class 2/Appx A	Gray/Bilge Red	4 sets	Renew with Standard Weight Underlayment Type I/II Class 2
AMR # 8 2-93-0-E	Steel	1,500	Polymeric Epoxy Resin, Type I, Class 2/Appx A	Gray/Bilge Red	4 sets	Renew with Standard Weight Underlayment Type I/II Class 2
2-147-0-E STEERING-GEAR ROOM	Steel	500	Polymeric Epoxy Resin, Type I, Class 2/Appx A	Gray/Bilge Red	4 sets	Renew with Standard Weight Underlayment Type I/II Class 2

***Approximated**
****Slip-resistant treads or non skid mat**

1.2 Government-furnished property.

None.

2. REFERENCES

COAST GUARD DRAWINGS

Coast Guard Drawing 420-WAGB-631-001, Rev D, Paint Schedule & Corrosion Control
Coast Guard Drawing 420-WAGB-634-001, Rev C, Deck Covering & Carpet Shed
Coast Guard Drawing 420-WAGB-635-001, Rev E, Insulation Layouts & Dets
Coast Guard Drawing 420-WAGB-801-001, Rev K, Booklet of General Drawings

COAST GUARD PUBLICATIONS

Surface Forces Logistics Center Standard Specification 0000 (SFLC Std Spec 0000), 2022, General Requirements

Surface Forces Logistics Center Standard Specification 0740 (SFLC Std Spec 0740), 2022, Welding and Allied Processes

Surface Forces Logistics Center Standard Specification 6310 (SFLC Std Spec 6310), 2022, Requirements for Preservation of Ship Structures

Surface Forces Logistics Center Standard Specification 6341 (SFLC Std Spec 6341), 2022, Install Interior Deck Covering Systems

OTHER REFERENCES

American Welding Society (AWS) B1.10M/ B1.10, 2016, Guide for Nondestructive Examination of Welds

American Welding Society (AWS) B1.11M/B1.11, 2015, Guide for the Visual Examination of Welds

American Welding Society (AWS) D1.1/D1.1M, 2025, Structural Welding Code – Steel

American Welding Society (AWS) D3.5, 2000, Guide for Steel Hull Welding

ASTM Internationals (ASTM) G46-21, 2021, Standard Guide for Examination and Evaluation of Pitting Corrosion

MIL-PRF-3135H, 2021, Deck Covering Underlay Materials

MIL-PRF-24176C, 2020, Cement, Epoxy, Metal Repair and Hull Smoothing

MIL-PRF-24613A, 2017, Deck Covering Materials, Interior, Cosmetic Polymeric

MIL-PRF-24667C w/Int. Amendment 1, 2018, Coating System, Non-Skid, for Roll, Spray, or Self-Adhering Application

MIL-STD-1689A, 1990, Fabrication, Welding, and Inspection of Ships Structure

The Society for Protective Coatings (SSPC) Surface Preparation Specification No.3 (SSPC-SP 3), 2024, Power Tool Cleaning

The Society for Protective Coatings (SSPC) Surface Preparation Specification No.11 (SSPC-SP 11), 2020, Power Tool Cleaning to Bare Metal

The Society for Protective Coatings (SSPC)/NACE International (NACE) Joint Surface Preparation Standard SSPC-SP 10 (WAB)/NACE WAB-2, 2015, Near-White Metal Wet Abrasive Blast Cleaning

3. REQUIREMENTS

3.1 General.

3.1.1 CIR. The Contractor must submit a CIR for the inspections listed in the following paragraph(s) :

None.

3.1.2 Tech Rep. The Contractor must provide the services of Tech Reps and personnels as follows :

None.

3.1.3 Protective measures. The Contractor must furnish and install all protective measures in accordance

with SFLC Std Spec 0000, paragraph 3.3.3 (Vessel component, space, and equipment protection).

3.1.3.1 Specific protections. Specific areas/equipment/ components to be protected include, but are not limited to:

- Machinery and equipment (e.g. Generator Sets)
- Switch Boards, Controls, and Terminals (e.g. Main Switch Boards)
- Ventilation systems, and components
- Drains, covers, and plugs
- Adjacent deck surfaces and deck fittings

3.1.4 Interferences. The Contractor must handle all interferences in accordance with SFLC Std Spec 0000, Paragraph 3.3.5 (Interferences). Known interferences include, but are not limited to the following :

- Machinery and equipment (e.g. Generator Sets)
- Switch Boards, Controls, and Terminals (e.g. Main Switch Boards)
- Ventilation systems, and components
- Furniture (e.g. cabinets, desks, tables, benches, and chairs)
- Closures (e.g. doors, hatches, and scuttles)
- Drains, covers, and plugs
- Outfits, foundations, and fittings
- Controls, terminals, and switches
- Lights, alarms, cameras, speakers, sensors, switches, and supports
- Piping, hoses, and supports
- Cables, wires, and supports
- Slip-resistant deck covering treads

3.1.5 Work locations. The concerned work areas are listed in Table 1. See the applicable drawings in Section 2 References for guidance, locations, and details.

3.1.6 Materials, tools, and services. The Contractor must provide materials, tools, and services to accomplish the requirements in this work item. New components, parts, materials, and paints with the same color, comparable and matching material properties as the existing components/parts. Use references in Sections 1, 2 and SFLC Std Specs for guidance, required materials, and details.

3.1.7 Work plan. The Contractor must provide a work plan (preservation plan including protection plan) for the Deck Covering System listed in Table 1 in accordance with SFLC Std 6310, Paragraph 3.2 (Preservation Plan) to COR at the Arrival Conference.

3.1.8 Notification. The Contractor must give written notification to COR 5 days before starting work on this work item.

3.2 Inspection. In the presence of the Coast Guard Inspector and as designated by the COR, the Contractor must inspect all cleaned surfaces and exposed substrates of areas in Table 1 (after removing/cleaning surface covering/coatings and prior to priming substrates) in accordance with SFLC Std Spec 0740. Submit a CFR.

3.2.1 Visual inspection (VT). The Contractor must visually inspect all exposed substrates for any pittings,

corrosions, erosions, damages, and defects.

3.2.2 Pit measurement. The Contractor must take 400 pit measurements using a Contractor supplied 'Pit Gauge' in accordance with SFLC Std Spec 0740, Paragraph 3.13 (Evaluation of pitting corrosion). The results of these measurements must be included in the inspection report, showing where pit measurements are taken and the depth of the pit.

NOTE

Pit measurements must be taken on cleaned/exposed substrates in accordance with SFLC Std Spec 0740 (in accordance with ASTM G46 via SFLC Std Spec 0740)

3.2.3 Ultrasonic test (UT). The Contractor must take 400 UT measurements for determining suspected cracks and remaining substrate thicknesses in accordance with SFLC Std Spec 0740, Appendix C. The results of these measurements and the locations where they were taken must be included in the inspection report.

- UT for cracks. Take UT measurements along suspected cracked substrates/discontinuities to determine their boundaries.
- UT for thickness measurement. Take UT shots in the surrounding area of any pit measuring greater than 25% of plate thickness. UT shots must be taken in the four quadrants at an equal-distant radius from the pit center until full plate thickness is measured.

3.3 Substrate filling and fairing by epoxy for shallow pits and small corrosions (i.e. pits < 25% or corrosions < 25%). The Contractor must fill small pin holes, shallow pitted substrates (with remaining plate thicknesses over 75% of required plate thicknesses), and fair corroded substrates (with remaining cross sections over 75% of required cross section areas), with epoxy to delay further corrosions, after removing insulation, surface covering, and/or coating in accordance with SFLC Std Spec 6310, Appendix A (Cutter and Boat Exterior Painting Systems), "Metal Repair and Hull Smoothing", MIL-PRF-24176, and manufacturers' instructions.

- Procure 4 kits of epoxy (e.g. 0.5 Gallon/5 Kg Kit or equivalent) to conduct repairs.
- Apply remaining epoxy over high corrosion and erosion areas. (e.g. substrates repaired by clad welding, corners, edges, sills, welding seams, and high contact surfaces)

3.4 Deck covering installation (Renew underlayment). The Contractor must perform all tasks specified in SFLC Std Spec 6341 and follow manufacturers' installation instructions, to install a new deck covering system in the locations listed in Table 1.

3.4.1 Removal. The Contractor must remove and scrap all existing deck covering systems and underlayment materials from the specified work area(s) to expose the deck surfaces. Disposal shall be in accordance with all local, state, and federal laws and regulations.

3.4.2 Cleaning. The Contractor must clean the surfaces of all decks including decks inside coamings and all adjacent structural members (e.g. foundations, supports, outfits, and coamings) in accordance with SSPC-SP 10 (WAB)/NACE WAB-2, or SSPC-SP 10/NACE No. 2 with dust control, and SSPC-SP 11. Surfaces shall be completely free of corrosion products, mill scale, dirt, oil, grease, moisture, deteriorated paint, and other surface contaminants.

3.4.3 Priming. The Contractor must prime the prepared surfaces with recommended or equivalent primer in manufacturers' installation instruction/guideline in section 2.

3.4.4 Caulking. The Contractor must seal and caulk all edges, corners, and seams with marine grade sealant to prevent water intrusion.

3.4.5 Underlayment. The Contractor must install Epoxy Underlayment (MIL-PRF-3135H, Type I/II, Class 2) on the primed surface in accordance with SFLC Std Spec 6341 and manufacturers' installation instruction/guideline in section 2 above.

- Insulation : Install the same but thicker underlayment of 1/2 to 3/4 inch on the primed surface over tanks and hot machinery spaces instead of insulating underlayment where specified or required.
- Draining. Ensure that surfaces are at slope near each deck drain areas for proper draining.
- Slope test. Op test the slope to validate proper and satisfactory sloping to drainage.

3.4.6 Polymeric deck covering. The Contractor must apply Cosmetic Polymeric Epoxy Resin System (MIL-PRF-24613 Type I Class 2, Epoxy with Base Color Only) on underlayment material in accordance with SFLC Std Spec 6341, Appendix A and manufacturers' installation instruction/guideline in section 2 above.

3.4.7 Slip-resistance. The Contractor must add an aggregate (e.g. white aluminum oxide or glass beads) to the final seal coat. Refer to deck covering system manufacturer's recommendation.

- Omit the deck areas requiring slip-resistant treads.

3.5 Slip-resistant treads(/sheets). The Contractor must renew all removed slip-resistant treads on decks at both sides of watertight doors, and head and foot of ladders in accordance with SFLC Std Spec 6341 and MIL-PRF-24667C, Type XI.

- Install one-piece large pads.
- Seal all periphery of slip-resistant treads/sheets with sealing compound.

3.6 Touch-up preservation. The Contractor must prepare and coat all new and disturbed surfaces to match existing adjacent surfaces in accordance with SFLC Std Spec 6310, Paragraph 3.1.13 (Touch-ups and minor coating repairs).

3.7 CFR. The Contractor must summarize and submit a CFR to the COR if additional repair is necessary or required.

4. NOTES

4.1 Sealer particulars. Sealer for designated deck covering system(s) may be procured from the deck covering system's manufacturer.

- Authorized suppliers for cosmetic polymeric deck covering systems are listed on the Qualified Product Listing (QPL) 24613 for MIL-PRF-24613

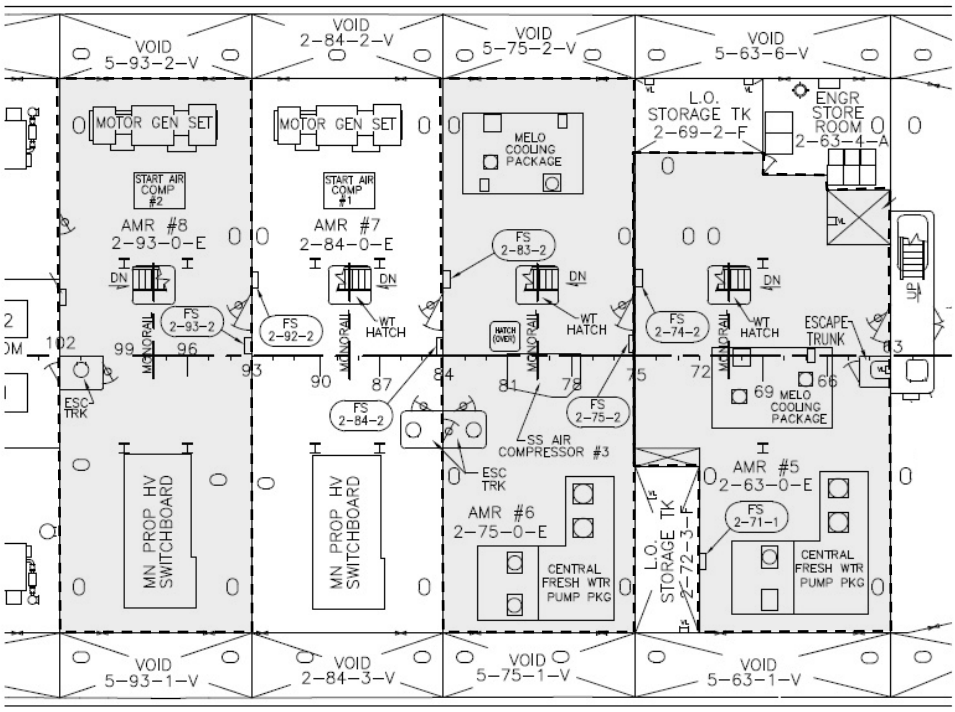

FIGURE 1 AUXIRARY MACHINERY ROOMS # 5, 6, AND 8

FIGURE 2 SAMPLE DECKS IN AUXIRARY MACHINERY ROOM # 6

WORK ITEM 49: Superstructure, Preserve (Partial)

1. SCOPE

1.1 Intent. This work item describes the requirements for the Contractor to partially preserve the superstructure including adjacent structures, systems, and outfits as listed in Tables 1 and 2. (defined in Note 4 and illustrated in Figure 1).

TABLE 1 SUPERSTRUCTURE PRESERVATION

LOCATION	COMPO	SYSTEM/APPENDIX (SFLC STD 6310)	TOPCOAT COLOR	PRESERVE LEVEL	NOTE
Superstructures - Bow House (incl. Shore Power Enclosure), - Deck House, - Pilot House (incl. Walkway), - Amidships and Hangar, - Stern House (incl. Helo Control)	Bulkheads, Overheads, Platforms, Supports, Foundation Outfits, Fittings	Freeboard/Superstructure/Mast (Freeboard/ Superstructure, Steel), Option I	White 17925	Partial	Partial Layers of Overall Areas

TABLE 2 ADJACENT STRUCTURES, SYSTEMS, OR OUTFITS

LOCATION	COMPO	SYSTEM/APPENDIX (SFLC STD 6310)	TOPCOAT COLOR	PRESERVE LEVEL	NOTE
Bow Quarter/ Bulwarks	Bulkheads, Overheads, Platforms, Supports, Foundation Outfits, Fittings	Freeboard/Superstructure/Mast (Freeboard/ Superstructure, Steel), Option I	White 17925	Partial	Partial Layers of Overall Areas
Breezeways, Stbd and Port	Bulkheads, Supports, Foundation Outfits, Fittings Stanchions, and Rails	Freeboard/Superstructure/Mast (Freeboard/ Superstructure, Steel), Option I	White 17925	Partial	Partial Layers of Overall Areas

Stern Quarter	Supports, Foundation Outfits, Fittings Stanchions, and Rails	Freeboard/Superstructure/Mast (Freeboard/ Superstructure, Steel), Option I	White 17925	Partial	Partial Layers of Overall Areas

1.2 Government-furnished property.

None.

2. REFERENCES

COAST GUARD DRAWINGS

Coast Guard Drawing 420-WAGB-100-001, Rev B, Non Destructive Test Requirements
Coast Guard Drawing 420-WAGB-101-028, Rev D, Construction Drawings for Units 410 & 411
Coast Guard Drawing 420-WAGB-101-029, Rev D, Construction Drawings for Units 400 & 401
Coast Guard Drawing 420-WAGB-101-031, Rev D, Construction Drawings for Unit 402
Coast Guard Drawing 420-WAGB-101-032, Rev D, Construction Drawings for Units 424 & 434
Coast Guard Drawing 420-WAGB-101-035, Rev C, Construction Drawings for Units 442, 443, & 480
Coast Guard Drawing 420-WAGB-101-036, Rev B, Construction Drawings for Units 444 & 445
Coast Guard Drawing 420-WAGB-101-037, Rev C, Construction Drawings for Units 446 & 447
Coast Guard Drawing 420-WAGB-101-038, Rev B, Construction Drawings for Units 448 & 449
Coast Guard Drawing 420-WAGB-101-039, Rev D, Construction Drawing Units 450 & 451
Coast Guard Drawing 420-WAGB-101-040, Rev C, Construction Drawing Units 452 & 453
Coast Guard Drawing 420-WAGB-101-041, Rev B, Construction Drawing Units 454 & 455
Coast Guard Drawing 420-WAGB-101-042, Rev B, Construction Drawing Units 456 & 457
Coast Guard Drawing 420-WAGB-101-043, Rev C, Construction Drawing Units 412 & 413
Coast Guard Drawing 420-WAGB-101-044, Rev C, Construction Drawing Units 415 & 000
Coast Guard Drawing 420-WAGB-101-045, Rev D, Construction Drawing Units 422 & 423
Coast Guard Drawing 420-WAGB-101-055, Rev E, Construction Drawing Units 425-435
Coast Guard Drawing 420-WAGB-101-068, Rev C, Construction Drawing Units 432 & 433
Coast Guard Drawing 420-WAGB-101-069, Rev B, Construction Drawing Units 458 & 459
Coast Guard Drawing 420-WAGB-101-070, Rev B, Construction Drawing Units 460 & 461
Coast Guard Drawing 420-WAGB-101-075, Rev C, Construction Drawing Unit 470
Coast Guard Drawing 420 WAGB 801-001, Rev J, Booklet of General Drawings

COAST GUARD PUBLICATIONS

Coast Guard Commandant Instruction (COMDTINST) M10360.3 (Series), Coatings and Color Manual

Surface Forces Logistics Center Standard Specification 0000 (SFLC Std Spec 0000), 2022, General Requirements

Surface Forces Logistics Center Standard Specification 6310 (SFLC Std Spec 6310), 2022, Requirements for Preservation of Ship Structures

OTHER REFERENCES

American Welding Society (AWS) B1.10M/ B1.10, 2016, Guide for Nondestructive Examination of Welds

American Welding Society (AWS) B1.11M/B1.11, 2015, Guide for the Visual Examination of Welds

American Welding Society (AWS) D1.1/D1.1M, 2025, Structural Welding Code – Steel

American Welding Society (AWS) D3.5, 2000, Guide for Steel Hull Welding

MIL-A-22262B Amendment 2, 2021, Abrasive Blasting Media Ship Hull Blast Cleaning

MIL-PRF-24176C, 2020, Cement, Epoxy, Metal Repair and Hull Smoothing

MIL-STD-1689A, 1990, Fabrication, Welding, and Inspection of Ships Structure

The Society for Protective Coatings (SSPC) Surface Preparation Specification No.3 (SSPC-SP 3), 2024, Power Tool Cleaning

The Society for Protective Coatings (SSPC) Surface Preparation Specification No.11 (SSPC-SP 11), 2020, Power Tool Cleaning to Bare Metal

The Society for Protective Coatings (SSPC)/NACE International (NACE) Joint Surface Preparation Standard SSPC-SP 6 (WAB)/NACE WAB-3, 2015, Commercial Wet Abrasive Blast Cleaning

The Society for Protective Coatings (SSPC)/NACE International (NACE) Joint Surface Preparation Standard SSPC-SP 10 (WAB)/NACE WAB-2, 2015, Near-White Metal Wet Abrasive Blast Cleaning

3. REQUIREMENTS

3.1 General.

3.1.1 CIR. The Contractor must submit a CIR for the inspections listed in the following paragraph(s) :

None.

3.1.2 Tech Rep. The Contractor must provide the services of Tech Reps and personnels as follows :

- Preservation Tech Rep : AMPP Senior Certified Coatings Inspector (NACE CIP Level 3/SSPC PCI Level 3) with Marine Coatings Inspection Specialty

3.1.2.1 Preservation Tech Rep. The Contractor must provide the services of a Certified Coating Inspector having successfully completed relevant AMPP (NACE/SSPC) Programs and Trainings to:

- Serve as an Independent Coating Tech Rep.
- Accomplish applicable requirements in SFLC Std Spec 0000, Paragraph 3.2.4.2.2 (Coating Tech Rep).
- Oversee the Preservation Plan requirements in SFLC Std Spec 6310,

Paragraph 3.2 (Preservation plan).

- Review and sign daily reports summarizing work. See forms QA-1 thru QA-5 provided in the General Requirements.
- Submit reports to the COR within 24 hours of each inspection.

3.1.2.1.1 Qualifications/certifications. Submit the Coating Tech Rep's qualifications/certifications in accordance with SFLC Std Spec 0000, 3.2.4.2.2.3 and 3.2.4.2.4, include name, certificate number and documented completion of relevant AMPP (NACE/SSPC) Courses and Exams.

3.1.2.1.2 Submit the name and the certification of the Tech Rep to the COR at the Arrival Conference. Include the dates of services the Qualified Tech Reps will be on site as per their subcontract documentation.

3.1.3 Protective measures. The Contractor must furnish and install all protective measures in accordance with SFLC Std Spec 0000, paragraph 3.3.3 (Vessel component, space, and equipment protection).

3.1.3.1 Specific protections. Specific areas/equipment/ components to be protected include, but are not limited to:

- C5ISC equipment, antennas, terminals, cables, and supports (incl. stuffing tubes)
- Navigation aids and lights (e.g. navigation lights, flood lights, yardarm blinkers)
- Antennas and controls
- Machinery and equipment
- Windows
- Adjacent deck surfaces and deck fittings

3.1.3.2 Deck drains. Plug or cover all deck drains, weather deck supply and discharge prevent entry of blast grit or debris.

3.1.4 Interferences. The Contractor must handle all interferences in accordance with SFLC Std Spec 0000, Paragraph 3.3.5 (Interferences). Known interferences include, but are not limited to the following :

- Machinery and equipment (e.g. cranes)
- Ventilation systems
- Outfits, foundations, and fittings
- Closures (e.g. doors, hatches, and scuttles)
- Controls and terminals
- Lights, alarms, cameras, speakers, sensors, switches, and supports
- Piping, hoses, and supports
- Cables, wires, and supports

3.1.5 Work locations. The concerned work areas are listed in Tables 1 and 2 (defined in Note 4 and illustrated in Figure 1). See Section 4 Notes and the applicable drawings in Section 2 for guidance, locations, and details.

3.1.6 Materials, tools, and services. The Contractor must provide materials, tools, and services to accomplish the requirements in this work item. New components, parts, materials, and paints with the same color, comparable and matching material properties as the existing components/parts. Use references in Sections 1, 2 and SFLC Std Specs for guidance, required materials, and details.

3.1.7 Water used for washing and surface preparation procedures. The Contractor must ensure that water used in all washing and surface preparation tasks (including pre-surface preparation wash, and wet abrasive blasting) is in accordance with SSPC/NACE Standards regarding to WJs or WABs. The water used must be sufficient purity and quality, and it must not prevent the surface being cleaned from achieving the required degree of surface cleanliness or non-visible contamination criteria.

- Ensure that surface preparation water does not contain sediments or other impurities that are destructive to the proper functioning of the cleaning equipment.
- Ensure that all water used in any surface preparation or cleaning procedures is captured, contained, and all spent water disposed of in accordance with all federal, state and local regulations.

3.1.8 Surface preparation optional methods. The Contractor has the option of using either "Wet Abrasive Blasting", "Dry Abrasive Blasting" or "Water Jetting" to achieve the required surface preparation, prior to application of the coating system specified in preservation requirements.

- Achieving greater productivity
- Achieving the required surface profile

NOTES

WABs and DABs are requested and preferred respectively, while WJs are still listed and approved under SFLC Std Spec 6310.

Anyhow, WJs are acceptable only when remaining surface profiles still meet standards and requirements. Otherwise, any surface prep areas failed to meet standards and requirements must be corrected/implemented by DABs, WABs or equivalent.

3.1.9 Work plan. The Contractor must provide a work plan (preservation plan including protection plan) for the Superstructure Preservation in accordance with SFLC Std 6310, Paragraph 3.2 (Preservation Plan) to the COR at the Arrival Conference.

3.1.10 Work coordination. The Contractor must coordinate the accomplishment of this work item with the following work items :

- Tenting, Provide
- Stack, Preserve
- Deck Covering (Slip-Resistant), Repair/Renew
- Superstructure, Inspect
- Stack, Inspect
- Hull Plate (Freeboard), Inspect

3.2 Quality assurances and controls. The Contractor must abide by all the safety, preservation, and quality control requirements specified in SFLC Std Spec 0000, Paragraph 3.2.4.2 (In-process QC measures for

"critical-coated surfaces"), and the quality controls specified in SFLC Std Spec 6310, Paragraph 3.1.10 (Coating inspection) and 3.1.15 (Coating system tests).

NOTICE

Surfaces being preserved are considered "critical-coated surfaces".

3.3 Operational test – initial. Prior to commencement of work, the Contractor must witness Coast Guard personnel (including C5ISC personnel) perform an initial operational test of the equipment listed below to demonstrate existing operational condition. Submit a CFR.

- Machinery and equipment
- C5ISC electrical and electronic equipment
- Drain systems and pipings

NOTE

Coast Guard personnel will operate all shipboard machinery and equipment.

3.4 Visual inspection (VT). In the presence of the Coast Guard Inspector, the Contractor must visually inspect of all surface areas and exposed substrates for any related damages and defects in accordance with SFLC Std Spec 0740. Submit a CFR.

3.5 Superstructure general (incl Bow Quarter, Breezeways, and Stern Quarter). The Contractor must preserve the surfaces of superstructure (i.e. deckhouse, and hangar), including all adjacent structural members (as listed in Tables 1 and 2, defined in Note 4, and illustrated in Figure 1), using the method specified in SFLC Std Spec 6310, Appendix A (Cutter and Boat Exterior Painting Systems). Apply finish/top coat to match existing adjacent surfaces. Select option(s) as follows:

- Freeboard/Superstructure/Mast (Freeboard/Superstructure, Steel)
- Commercial Wet Abrasive Blast Cleaning SSPC-SP 6 (WAB)/NACE No.WAB-3 (for Partial Preservation), and
- Power Tool Cleaning to Bare Metal (SSPC-SP 11) for all coating defects, outfits/fittings, and limited access areas

3.5.1 Pre-surface preparation wash. The Contractor must accomplish low-pressure (less than 5,000 psi) fresh water wash of all affected surfaces, to remove soluble chlorides and other surface contaminants. Refer to SSPC-SP 1, for guidance.

3.5.2 Corrosion removal. As designated by the Coast Guard Inspector (where there is evidence of coating failure), prior to application of the coating system, the Contractor must clean to achieve the required surface preparation by :

- Near-White Metal Wet Abrasive Blast Cleaning SSPC-SP 10 (WAB)/NACE WAB-2, or
- Abrasive blasting to SSPC-SP 10/NACE No. 2, using grit conforming to MIL-A-22262 (1.5 to 2.5 mil anchor profile), and
- Power Tool Cleaning to Bare Metal (SSPC-SP 11) for all coating defects, outfits/fittings, and limited access areas

3.5.3 Abrading. The Contractor must roughen/abrade all remaining surfaces where existing top coating is intact, by sweep-blasting to :

- Commercial Wet Abrasive Blast Cleaning SSPC-SP 6 (WAB)/NACE WAB-3,

- Commercial Abrasive Blast Cleaning SSPC-SP 6/NACE No. 3 or
- Using suitable grit paper, to de-gloss the top-coating and produce a suitable surface profile to allow proper adhesion of a new top coating.

3.5.4 Feathering. The Contractor must feather edges of top coating into adjacent bare areas, to create a smooth transition.

NOTES

1. A profile suitable for over coating would be similar to what is produced by abrading the coating with 100-grit paper.

2. Water jetting without abrasive addition does not provide any additional anchor profile to the surface, beyond what was present after the previous surface preparation.

3.5.5 Post-surface preparation cleaning and inspection. After completion of surface preparation and prior to coating application, accomplish the following tasks, and submit a CFR.

3.5.5.1 Post-surface preparation inspection. Perform a visual inspection of the prepared substrate or surface.

3.5.5.2 Post-surface preparation cleaning. Perform solvent cleaning of all prepared surfaces, in accordance with SSPC-SP 1. Capture, contain, and dispose of all wastes from solvent cleaning, in accordance with all federal, state and local regulations.

3.5.6 Coating. The Contractor must restore and add coating layers of the preserved surfaces using coating systems specified in accordance with SFLC Std Spec 6310 as follows :

3.5.6.1 Substrate surfaces.

- Prime bare substrates with specified Primer.
- Coat all exposed substrates with a “Polysiloxane Epoxy Primer/Mid-Coat” coating, to a thickness matching that of existing adjacent undercoating.
- Ensure that the primer coating extends over the feathered edges of the sound/intact coating, to minimize edge lifting and provide a better appearance.

3.5.6.2 Geometric shapes and weld seams. Stripe coat all geometric shapes and weld seams.

3.5.6.3 Abraded surfaces. Overcoat all primed and abraded surfaces, with an “Epoxy Polysiloxane” Coating, to ensure a uniform thickness throughout the entire surfaces.

CAUTION

Unless a containment system is used to contain surface preparation dust, debris, and coating application overspray during pier side/dockside preservation, the following must be adhered to:

1. All surface preparation tools/equipment must vacuum-shrouded.

2. Coatings must be applied by brushing or rolling.

3. Coating application by brushing or rolling may require additional coats to obtain required dry film thickness.

3.6 Other miscellaneous surfaces. The Contractor must preserve and color-coat all other miscellaneous surfaces in accordance with SFLC Std Spec 6310, COMDTINST M10360.3, or Manufacturer Instructions respectively. Use the same top coating material as used on the rest of the superstructure surfaces, in the required colors.

3.7 Visual safety and identification markings. After the completion of work, the Contractor must install or paint all distinctive visual safety and identification markings as follows :

3.7.1 Painted markings. The Contractor must paint all distinctive visual identification markings in accordance with SFLC Std Spec 6310, COMDTINST M10360.3 (Series), Chapter 5 Cutter and Boat Safety Colors and Markings and Chapter 7 Cutter and Boat Identification Markings, and Coast Guard Drawings FL-2804-022. Use the same top coating material as used on the rest of the surrounding surfaces, in the required colors.

3.8 Touch-up preservation. The Contractor must prepare and coat all new and disturbed surfaces to match existing adjacent surfaces in accordance with SFLC Std Spec 6310, Paragraph 3.1.13 (Touch-ups and minor coating repairs).

- Repair of un-intended damages. Repair all damages, including overspray, incurred to surfaces not covered by the scope of this work item, during surface preparation and paint application procedures.

NOTES

1. List of authorized suppliers for the "Polysiloxane Epoxy Primer/Mid-Coat" and "Epoxy Polysiloxane" coatings is provided in SFLC Std Spec 6310, Appendix C, Cutter And Boat Authorized Coatings.

2. Coating application by brushing or rolling may require additional coats to obtain required dry film thickness.

3. Coast Guard Emblem decals may be substituted for painted emblems. Vinyl adhesive letters and numbers may also be substituted for painted letters and numbers - at the Contractor's discretion. Although there may be several possible procurement sources for the Coast Guard Emblem decals and vinyl adhesive letters and numbers, one known source is:

Brace Enterprises
10250 SE 138 Terrace
Dunnellon, FL 34431
Tel. 352-489-4442 / Fax: 352-489-4476
www.braceenterprise.com

3.9 Operational test-post repair. After completion of work, the Contractor must witness an operational test (by Coast Guard personnel, including C5ISC personnel) of the equipment listed below to demonstrate satisfactory operational condition. Submit a CFR.

- Machinery and equipment
- C5ISC electrical and electronic equipment
- Drain systems and pipings

NOTE

Coast Guard personnel will operate all shipboard machinery and equipment.

3.10 CFR. The Contractor must summarize and submit a CFR to the COR if additional repair is necessary or required.

4. NOTES

4.1 Definition of superstructure. For the purposes of this item, superstructure surfaces are defined as vertical surfaces/bulkheads and horizontal surface/overheads/underneath platforms (White Paints) excluding Stack, Mast, Weather Decks but including adjacent structures and surfaces (e.g. Outfits, Fittings, Foundations, Ladders, Stanchions and Rails) as follows :

- Bow Quarter : Bow to Frame 33 (incl. Bulwarks)
- Bow House (incl. Shore Power Enclosure) : Frames 21 to 33, 01 to 03 Level Decks
- Deck House : Frames 33 to 63, 01 to 05 Level Decks
- Pilot House (incl. Walkway) : Frames 33 to 54, 05 to 06 Level Decks (Top of Pilot House)
- Amidships and Hangar : Frames 63 to 117, 01 to 05 Level Decks (Top of Helo Control Station)
- Stern House (incl. Helo Control) : Frames 117 to 144, Main Deck to 02 Level Decks (Flight Deck Edges excluding Flight Deck Net)
- Stern Quarter : Frames 117 to Stern (incl. Stanchions and Rails)

4.2 Specific adjacent structural members. Specific adjacent structural members to be preserved together include, but are not limited to :

- Pilot House (including all bridge and wings' structures)
- Helicopter Hangar (exterior only)
- Bulwarks (inboard and top surfaces)
- Breezeways (inboard overheads and bulkheads surfaces)
- Lockers (exterior only)
- Ventilation Screens, Goosenecks, Tank Vents, and/or Cofferdams (interior and exterior)
- Also included are identification markings, machinery appendages and piping, which extend from any of the vertical or overhead surfaces as well as all attachments secured, bracketed or adjacent to the previously defined superstructure.

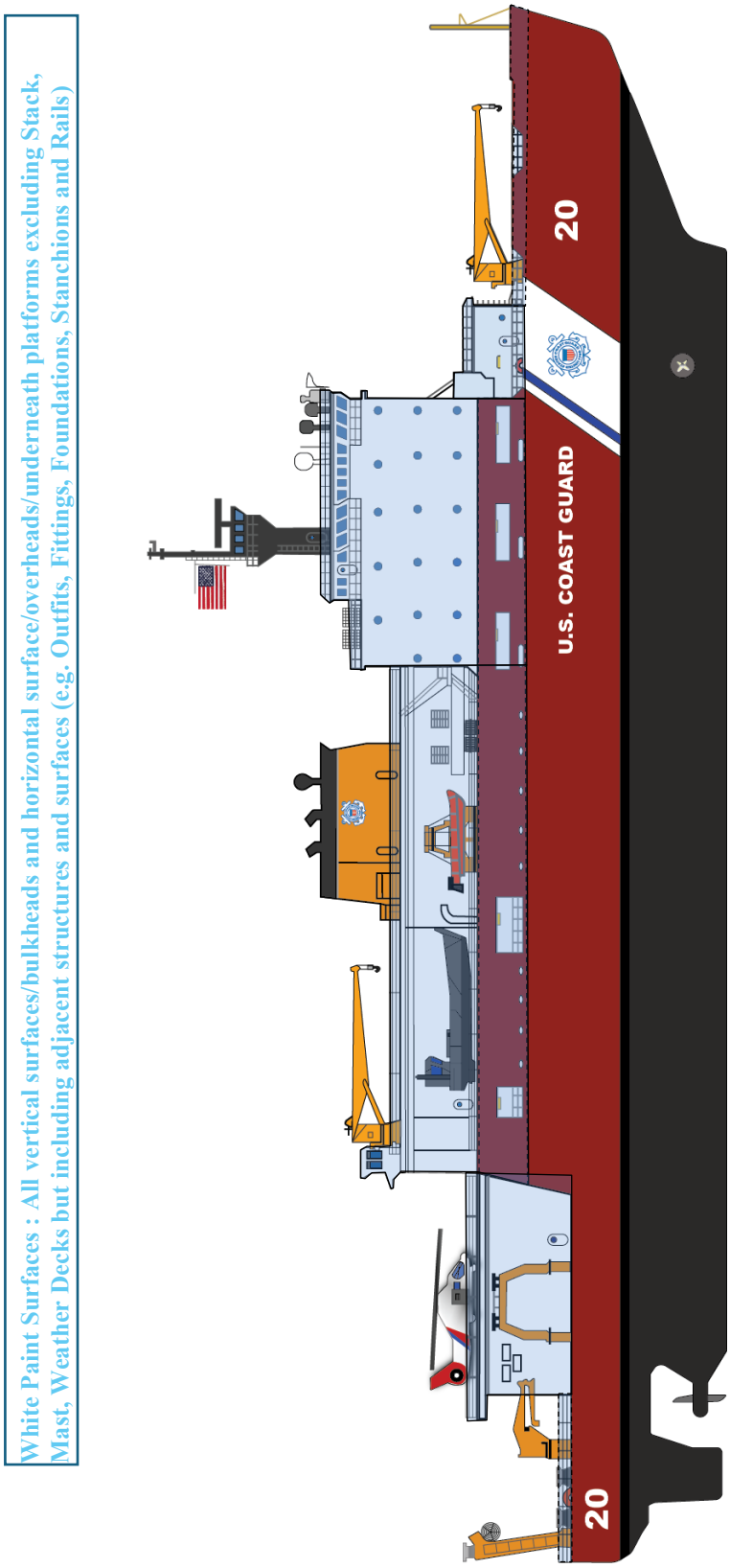

FIGURE 1 SUPERSTRUCTURE PRESERVATION

WORK ITEM 50: Stack, Preserve (Partial)

1. SCOPE

1.1 Intent. This work item describes the requirements for the Contractor to partially preserve the stack including adjacent structures, systems, and outfits as listed in Tables 1. (defined in Note 4 and illustrated in Figure 1).

TABLE 1 STACK PRESERVATION

LOCATION	COMPO	SYSTEM/APPENDIX (SFLC STD 6310)	TOPCOAT COLOR	PRESERVE LEVEL	NOTE
Stack	Bulkhead Supports Outfits	Smoke Stack (Smoke Stack Casing, Steel Exterior)	Spar 10371	Partial	Partial Layers of Overall Areas
Top of Stack (incl. Side Bands and Aft Bhd)	Decks All Sides Exhausts Aft Bhd	Smoke Stack (Smoke Stack Casing, Steel Exterior)	Black 37038	Partial	Partial Layers of Overall Areas

1.2 Government-furnished property.

TABLE 1 GOVERNMENT FURNISHED PROPERTY

MTI	ITEM DESCRIPTION	NSN/PN	QTY	PRICE ($/UNIT)
N	Coast Guard Emblem Vinyl Kit	N/A	2 ea.	2,000.00

Note : *New or refurbished equipment that the Government may provide for installation in place of existing equipment.

2. REFERENCES

COAST GUARD DRAWINGS

Coast Guard Drawing 420-WAGB-100-001, Rev B, Non Destructive Test Requirements

Coast Guard Drawing 420-WAGB-101-046, Rev B, Construction Drawing Unit 498 Stack

Coast Guard Drawing 420 WAGB 801-001, Rev J, Booklet of General Drawings

Coast Guard Fleet Drawing FL-2804-022, Rev B, Consolidated Visual ID for Cutters (Vessels 65 ft and Over in Length)

COAST GUARD PUBLICATIONS

Coast Guard Commandant Instruction (COMDTINST) M10360.3 (Series), Coatings and Color Manual

Surface Forces Logistics Center Standard Specification 0000 (SFLC Std Spec 0000), 2022, General Requirements

Surface Forces Logistics Center Standard Specification 6310 (SFLC Std Spec 6310), 2022, Requirements for Preservation of Ship Structures

OTHER REFERENCES

American Welding Society (AWS) B1.10M/ B1.10, 2016, Guide for Nondestructive Examination of Welds

American Welding Society (AWS) B1.11M/B1.11, 2015, Guide for the Visual Examination of Welds

American Welding Society (AWS) D1.1/D1.1M, 2025, Structural Welding Code – Steel

American Welding Society (AWS) D3.5, 2000, Guide for Steel Hull Welding

MIL-A-22262B Amendment 2, 2021, Abrasive Blasting Media Ship Hull Blast Cleaning

MIL-PRF-24176C, 2020, Cement, Epoxy, Metal Repair and Hull Smoothing

MIL-STD-1689A, 1990, Fabrication, Welding, and Inspection of Ships Structure

The Society for Protective Coatings (SSPC) Surface Preparation Specification No.3 (SSPC-SP 3), 2024, Power Tool Cleaning

The Society for Protective Coatings (SSPC) Surface Preparation Specification No.11 (SSPC-SP 11), 2020, Power Tool Cleaning to Bare Metal

The Society for Protective Coatings (SSPC)/NACE International (NACE) Joint Surface Preparation Standard SSPC-SP 6 (WAB)/NACE WAB-3, 2015, Commercial Wet Abrasive Blast Cleaning

The Society for Protective Coatings (SSPC)/NACE International (NACE) Joint Surface Preparation Standard SSPC-SP 10 (WAB)/NACE WAB-2, 2015, Near-White Metal Wet Abrasive Blast Cleaning

3. REQUIREMENTS

3.1 General.

3.1.1 CIR. The Contractor must submit a CIR for the inspections listed in the following paragraph(s) :

None.

3.1.2 Tech Rep. The Contractor must provide the services of Tech Reps and personnels as follows :

- Preservation Tech Rep : AMPP Senior Certified Coatings Inspector (NACE CIP Level 3/SSPC PCI Level 3) with Marine Coatings Inspection Specialty

3.1.2.1 Preservation Tech Rep. The Contractor must provide the services of a Certified Coating Inspector having successfully completed relevant AMPP (NACE/SSPC) Programs and Trainings to:

- Serve as an Independent Coating Tech Rep.
- Accomplish applicable requirements in SFLC Std Spec 0000, Paragraph 3.2.4.2.2 (Coating Tech Rep).
- Oversee the Preservation Plan requirements in SFLC Std Spec 6310,

Paragraph 3.2 (Preservation plan).

- Review and sign daily reports summarizing work. See forms QA-1 thru QA-5 provided in the General Requirements.
- Submit reports to the COR within 24 hours of each inspection.

3.1.2.1.1 Qualifications/certifications. Submit the Coating Tech Rep's qualifications/certifications in accordance with SFLC Std Spec 0000, 3.2.4.2.2.3 and 3.2.4.2.4, include name, certificate number and documented completion of relevant AMPP (NACE/SSPC) Courses and Exams.

3.1.2.1.2 Submit the name and the certification of the Tech Rep to the COR at the Arrival Conference. Include the dates of services the Qualified Tech Reps will be on site as per their subcontract documentation.

3.1.3 Protective measures. The Contractor must furnish and install all protective measures in accordance with SFLC Std Spec 0000, paragraph 3.3.3 (Vessel component, space, and equipment protection).

3.1.3.1 Specific protections. Specific areas/equipment/ components to be protected include, but are not limited to:

- Navigation aids and lights (e.g. navigation lights, flood lights, yardarm blinkers)
- Antennas and controls
- C5ISC equipment, antennas, terminals, cables, and supports (incl. stuffing tubes)
- Exhausts
- Louvers
- Life lines.
- Drains, covers, and plugs
- Adjacent decks/bulkheads surfaces and fittings

3.1.3.2 Exhausts. Provide rigid protective covers (e.g. plates, or plywoods) on the exhaust opening to prevent any objects, welding splashes, blast media, debris, or dust entering into machinery spaces, machinery, and equipment especially for gas turbine engine, and main propulsion diesel engines.

3.1.3.3 Deck drains. Plug or cover all deck drains, weather deck supply and discharge prevent entry of blast grit or debris.

3.1.4 Interferences. The Contractor must handle all interferences in accordance with SFLC Std Spec 0000, Paragraph 3.3.5 (Interferences). Known interferences include, but are not limited to the following :

- Ventilation systems (e.g. ventilation inlets/outlets, screens, gratings, and trunks)
- Closures (e.g. doors, hatches, and scuttles)
- Outfits, foundations, and fittings
- Controls and terminals
- Lights, alarms, cameras, speakers, sensors, switches, and supports
- Piping, hoses, and supports

- Cables, wires, and supports

3.1.4.1 Exhaust covers/coaming. Remove exhaust structure covers/coamings for compete inspections and preservations. Reinstall upon completion of inspection, repair and preservation.

3.1.5 Work locations. The concerned work areas are listed in Table 1. (defined in Note 4 and illustrated in Figure 1) See Section 4 Notes and the applicable drawings in Section 2 for guidance, locations, and details.

3.1.6 Materials, tools, and services. The Contractor must provide materials, tools, and services to accomplish the requirements in this work item. New components, parts, materials, and paints with the same color, comparable and matching material properties as the existing components/parts. Use references in Sections 1, 2 and SFLC Std Specs for guidance, required materials, and details.

3.1.7 Water used for washing and surface preparation procedures. The Contractor must ensure that water used in all washing and surface preparation tasks (including pre-surface preparation wash, and wet abrasive blasting) is in accordance with SSPC/NACE Standards regarding to WJs or WABs. The water used must be sufficient purity and quality, and it must not prevent the surface being cleaned from achieving the required degree of surface cleanliness or non-visible contamination criteria.

- Ensure that surface preparation water does not contain sediments or other impurities that are destructive to the proper functioning of the cleaning equipment.
- Ensure that all water used in any surface preparation or cleaning procedures is captured, contained, and all spent water disposed of in accordance with all federal, state and local regulations.

3.1.8 Surface preparation optional methods. The Contractor has the option of using either "Wet Abrasive Blasting", "Dry Abrasive Blasting" or "Water Jetting" to achieve the required surface preparation, prior to application of the coating system specified in preservation requirements.

- Achieving greater productivity
- Achieving the required surface profile

NOTES

WABs and DABs are requested and preferred respectively, while WJs are still listed and approved under SFLC Std Spec 6310.

Anyhow, WJs are acceptable only when remaining surface profiles still meet standards and requirements. Otherwise, any surface prep areas failed to meet standards and requirements must be corrected/implemented by DABs, WABs or equivalent.

3.1.9 Work plan. The Contractor must provide a work plan (preservation plan including protection plan) for the Stack Preservation in accordance with SFLC Std 6310, Paragraph 3.2 (Preservation Plan) to the COR at the Arrival Conference.

3.1.10 Work coordination. The Contractor must coordinate the accomplishment of this work item with the following work items :

- Tenting, Provide
- Superstructure, Preserve

- Stack, Inspect

3.2 Quality assurances and controls. The Contractor must abide by all the safety, preservation, and quality control requirements specified in SFLC Std Spec 0000, Paragraph 3.2.4.2 (In-process QC measures for "critical-coated surfaces"), and the quality controls specified in SFLC Std Spec 6310, Paragraph 3.1.10 (Coating inspection) and 3.1.15 (Coating system tests).

NOTE

Surfaces being preserved are considered "critical-coated surfaces".

3.3 Operational test – initial. Prior to commencement of work, the Contractor must witness Coast Guard personnel (including C5ISC personnel) perform an initial operational test of the equipment listed below to demonstrate existing operational condition. Submit a CFR.

- C5ISC electrical and electronic equipment
- Drain systems and pipings

NOTE

Coast Guard personnel will operate all shipboard machinery and equipment.

3.4 Visual inspection (VT). In the presence of the Coast Guard Inspector, the Contractor must visually inspect of all surface areas and exposed substrates for any related damages and defects in accordance with SFLC Std Spec 0740. Submit a CFR.

3.5 Stack. The Contractor must preserve the surfaces of stack including all adjacent structural members (as listed in Table 1, defined in Note 4, and illustrated in Figure 1), using the method specified in SFLC Std Spec 6310, Appendix A (Cutter and Boat Exterior Painting Systems). Apply finish/top coat to match existing adjacent surfaces. Select option(s) as follows:

- Smoke Stack (Smoke Stack Casing, Steel Exterior)
- Commercial Wet Abrasive Blast Cleaning SSPC-SP 6 (WAB)/NACE No.WAB-3 (for Partial Preservation), and
- Power Tool Cleaning to Bare Metal (SSPC-SP 11) for all coating defects, outfits/fittings, and limited access areas

3.5.1 Pre-surface preparation wash. The Contractor must accomplish low-pressure (less than 5,000 psi) fresh water wash of all affected surfaces, to remove soluble chlorides and other surface contaminants. Refer to SSPC-SP 1, for guidance.

3.5.2 Corrosion removal. As designated by the Coast Guard Inspector (where there is evidence of coating failure), prior to application of the coating system, the Contractor must clean to achieve the required surface preparation by :

- Near-White Metal Wet Abrasive Blast Cleaning SSPC-SP 10 (WAB)/NACE WAB-2, or
- Abrasive blasting to SSPC-SP 10/NACE No. 2, using grit conforming to MIL-A-22262 (1.5 to 2.5 mil anchor profile), and
- Power Tool Cleaning to Bare Metal (SSPC-SP 11) for all coating defects, outfits/fittings, and limited access areas

3.5.3 Abrading. The Contractor must roughen/abrade all remaining surfaces where existing top coating is intact, by sweep-blasting to :

- Commercial Wet Abrasive Blast Cleaning SSPC-SP 6 (WAB)/NACE WAB-3,
- Commercial Abrasive Blast Cleaning SSPC-SP 6/NACE No. 3 or
- Using suitable grit paper, to de-gloss the top-coating and produce a suitable surface profile to allow proper adhesion of a new top coating.

3.5.4 Feathering. The Contractor must feather edges of top coating into adjacent bare areas, to create a smooth transition.

NOTES

1. A profile suitable for over coating would be similar to what is produced by abrading the coating with 100-grit paper.

2. Water jetting without abrasive addition does not provide any additional anchor profile to the surface, beyond what was present after the previous surface preparation.

3.5.5 Post-surface preparation cleaning and inspection. After completion of surface preparation and prior to coating application, accomplish the following tasks, and submit a CFR.

3.5.5.1 Post-surface preparation inspection. Perform a visual inspection of the prepared substrate or surface.

3.5.5.2 Post-surface preparation cleaning. Perform solvent cleaning of all prepared surfaces, in accordance with SSPC-SP 1. Capture, contain, and dispose of all wastes from solvent cleaning, in accordance with all federal, state and local regulations.

3.5.6 Coating. The Contractor must restore and add coating layers of the preserved surfaces using coating systems specified in accordance with SFLC Std Spec 6310 as follows :

3.5.6.1 Substrate surfaces.

- Prime bare substrates with specified Primer.
- Coat all exposed substrates with a "Polysiloxane Epoxy Primer/Mid-Coat" coating, to a thickness matching that of existing adjacent undercoating.
- Ensure that the primer coating extends over the feathered edges of the sound/intact coating, to minimize edge lifting and provide a better appearance.

3.5.6.2 Geometric shapes and weld seams. Stripe coat all geometric shapes and weld seams.

3.5.6.3 Abraded surfaces. Overcoat all primed and abraded surfaces, with an "Epoxy Polysiloxane" Coating, to ensure a uniform thickness throughout the entire surfaces.

CAUTION

Unless a containment system is used to contain surface preparation dust, debris, and coating application overspray during pier side/dockside preservation, the following must be adhered to:

1. All surface preparation tools/equipment must vacuum-shrouded.

2. Coatings must be applied by brushing or rolling.

3. Coating application by brushing or rolling may require additional coats to obtain required dry film thickness.

3.5.7 Stack top and side bands and aft bulkhead. The Contractor must preserve top of stack and side bands with Black 17038. The width of the band must equal 1/2 the fore-and-aft diameter of the stack or 1/5 the height of the stack, whichever is smaller.

3.6 Other miscellaneous surfaces. The Contractor must preserve and color-coat all other miscellaneous surfaces in accordance with SFLC Std Spec 6310, COMDTINST M10360.3, or Manufacturer Instructions respectively. Use the same top coating material as used on the rest of the superstructure surfaces, in the required colors.

3.6.1 Surrounding components. Preserve all screens, gratings, closures, coamings, foundations, supports, outfits, and fittings around stack surfaces.

3.7 Visual safety and identification markings. After the completion of work, the Contractor must install or paint all distinctive visual safety and identification markings as follows :

3.7.1 Painted markings. The Contractor must paint all distinctive visual identification markings in accordance with SFLC Std Spec 6310, COMDTINST M10360.3 (Series), Chapter 5 Cutter and Boat Safety Colors and Markings and Chapter 7 Cutter and Boat Identification Markings, and Coast Guard Drawings FL-2804-022. Use the same top coating material as used on the rest of the surrounding surfaces, in the required colors.

3.7.2 Decals. Coast Guard Emblem decals may be substituted for painted emblems. Vinyl adhesive letters and numbers may also be substituted for painted letters and numbers - at the Contractor's discretion.

3.8 Touch-up preservation. The Contractor must prepare and coat all new and disturbed surfaces to match

existing adjacent surfaces in accordance with SFLC Std Spec 6310, Paragraph 3.1.13 (Touch-ups and minor coating repairs).

- Repair of un-intended damages. Repair all damages, including overspray, incurred to surfaces not covered by the scope of this work item, during surface preparation and paint application procedures.

NOTES

1. List of authorized suppliers for the "Polysiloxane Epoxy Primer/Mid-Coat" and "Epoxy Polysiloxane" coatings is provided in SFLC Std Spec 6310, Appendix C, Cutter And Boat Authorized Coatings.

2. Coating application by brushing or rolling may require additional coats to obtain required dry film thickness.

3. Coast Guard Emblem decals may be substituted for painted emblems. Vinyl adhesive letters and numbers may also be substituted for painted letters and numbers - at the Contractor's discretion. Although there may be several possible procurement sources for the Coast Guard Emblem decals and vinyl adhesive letters and numbers, one known source is:

Brace Enterprises
10250 SE 138 Terrace
Dunnellon, FL 34431
Tel. 352-489-4442 / Fax: 352-489-4476
www.braceenterprise.com

3.9 Operational test-post repair. After completion of work, the Contractor must witness an operational test (by Coast Guard personnel, including C5ISC personnel) of the equipment listed below to demonstrate satisfactory operational condition. Submit a CFR.

- C5ISC electrical and electronic equipment
- Drain systems and pipings

NOTE

Coast Guard personnel will operate all shipboard machinery and equipment.

3.10 CFR. The Contractor must summarize and submit a CFR to the COR if additional repair is necessary or required.

4. NOTES

4.1 Definition of stack. For the purposes of this item, superstructure surfaces are defined as All external Surfaces from Frames 75 to 90, 04 to 06 Level Decks/Top of Stack (i.e. Vertical Surfaces/Bulkheads, Tops, and Horizontal Surface/Overheads/Underneath Platforms) including adjacent structures and surfaces (e.g. Outfits, Fittings, Foundations, Ladders, Stanchions and Rails)

4.2 Stack band. The width of the stack band may be 1/2 the fore-and-aft diameter of the stack or 1/5 the height of the stack, whichever is the smaller.

4.3 Coast Guard emblems. Cutter will supply Coast Guard emblem decals for Contractor application.

FIGURE 1 STACK PRESERVATIONS

FIGURE 2 EXISTING STACK BULKHEADS

WORK ITEM 51: Deck sockets, Renewal

1. SCOPE

1.1 Intent. This work item describes the requirements for the Contractor to renew twenty (20) deck sockets.

1.2 Government-furnished property.

None.

2. REFERENCES

COAST GUARD DRAWINGS

Coast Guard Drawing 420-WAGB 611-3, Rev G, Misc Deck Sockets

Coast Guard Drawing 420-WAGB 635-1, Rev D, Insulation Layouts & Dets

Coast Guard Drawing 420-WAGB 801-1, Rev -, Booklet of General Drawings

COAST GUARD PUBLICATIONS

Surface Forces Logistics Center Standard Specification (SFLC Std Spec) 0000, Jan 2022, General Requirements

Surface Forces Logistics Center Standard Specification (SFLC Std Spec) 0740, Jan 2022, Welding and Allied Processes

Surface Forces Logistics Center Standard Specification (SFLC Std Spec) 6310, Jan 2022, Requirements for Preservation of Ship Structures

OTHER REFERENCES

NAVSEA Drawing 804-5773931, Rev A, Acoustic & Thermal Insulation For Compartments Installation Details

3. REQUIREMENTS

3.1 General.

3.1.1 CIR.

None.

3.1.2 Technical Representative.

Not applicable.

3.1.3 Protective measures - general. The Contractor must furnish and install all protective coverings to seal off and protect all non-affected vessel's components, equipment, and spaces in the vicinity of the work area against contamination during the performance of work. Upon completion of work, the Contractor must remove all installed protective measures, inspect for the presence of contamination, and return all contaminated equipment, components, and spaces to original condition of cleanliness.

3.1.4 Interferences. The Contractor must be aware that interferences in way of work include, but are not limited to the below-listed. Handle all interferences in accordance with SFLC Std Spec 0000, paragraph 3.3.5 (Interferences):

- Cable runs.
- Wiring.
- Overhead Insulation.
- Non-skid.
- Piping.

We need to identify interferences at location of tie downs to be renewed. Example is for forecastle.

- Drystores
- Flamable liquid Storeroom
- Stores handling room
- Magazzine
- Bosn's workshop
- Chain locker

3.2 Work Location. The concerned work areas are the various decks. See the Coast Guard Drawings above, for guidance and details.

3.3 Tie-down renewal.

3.3.1 Crop out and renew twenty (20) tie down cups in accordance with Coast Guard Drawing 420-WAGB 611-3 and SFLC Std Spec 0740. The Coast Guard Inspector will designate the affected tie-down cups.

3.3.2 Ensure that welding does not warp or cause any distortion to adjacent plating.

3.3.3 Fabricate and install tie down fittings, into the same locations as the removed tie downs in accordance with Coast Guard Drawing 420-WAGB 611-3.

3.3.4 Ensure that welding does not warp or cause any distortion to adjacent plating.

3.4 Tie down static pull test.

3.4.1 Upon completion of installation conduct paragraph 3.5 below. Repair all weld deficiencies and retest.

3.4.2 In the presence of the Coast Guard Inspector, in accordance with Coast Guard Drawing 420-WAGB 611-3, conduct a static pull test on each renewed tie down vertically upward from the horizontal. Hold the test load for 2 minutes. See Coast Guard Drawing 420-WAGB 611-3 for test loads.

3.4.3 After load testing is complete perform paragraph 3.5 again on each renewed tie down. Repair all weld deficiencies and retest.

3.4.4 Provide a written report of all nondestructive test findings to the Coast Guard Inspector.

3.5 NDI. The Contractor must perform NDI of the renewed tie downs and welds in accordance with SFLC Std Spec 0740, Appendix C. Submit a CFR.

3.6 Touch-up preservation. The Contractor must prepare and coat all new and disturbed exterior and interior surfaces to match existing adjacent surfaces, in accordance with SFLC Std Spec 6310. Abide by all touch-up requirements outlined in SFLC Std Spec 6310.

3.7 Insulation. For all areas disturbed during execution of this work item, furnish and install new overhead insulation in accordance with Coast Guard Drawing 420-WAGB 635-1. Coat newly installed insulation in accordance with NAVSEA Drawing 804-5773931 and Coast Guard Drawing 420-WAGB 635-1.

4. NOTES

4.1 figures of locations.

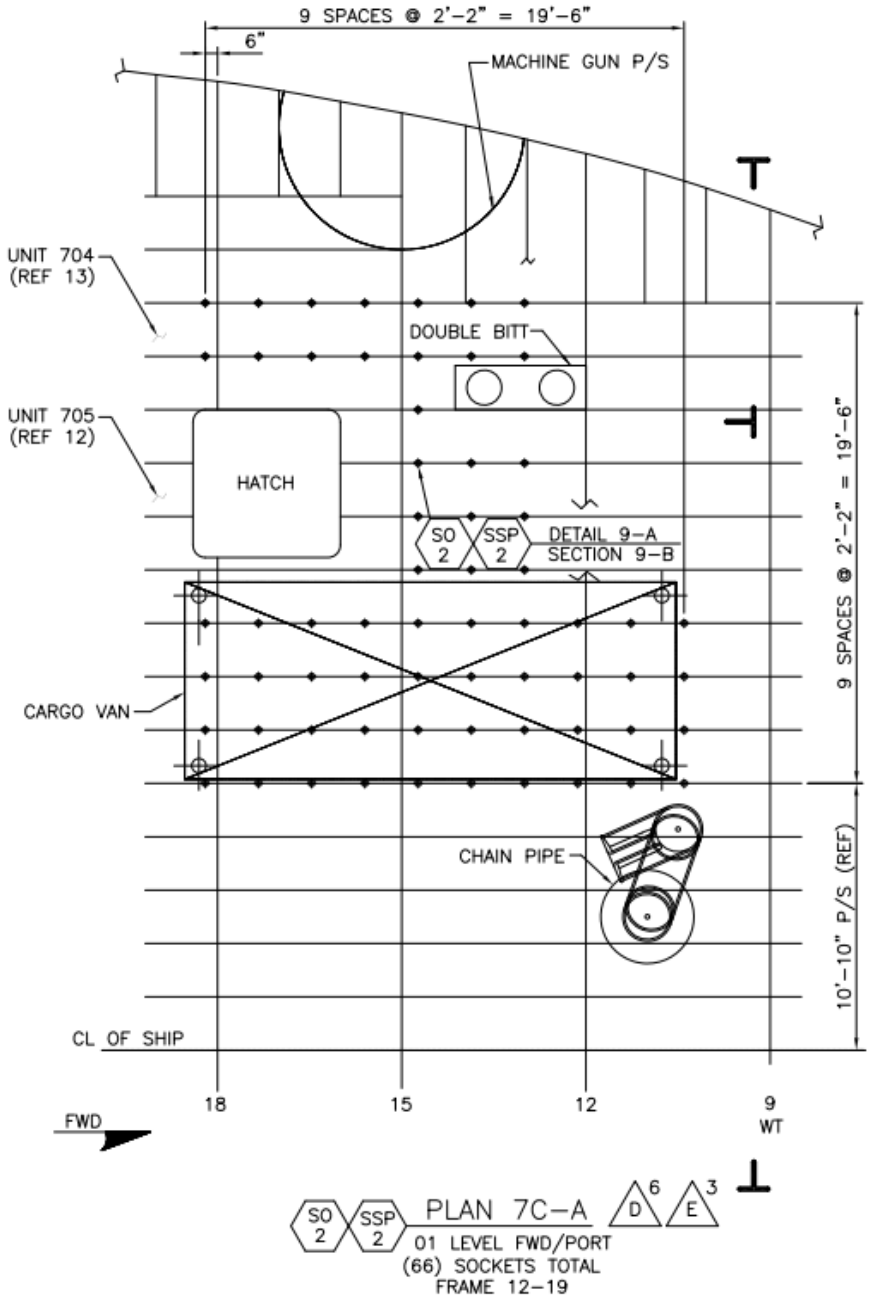

FIGURE 1. FORECASTLE, PORT SIDE DECK SOCKET LOCATIONS

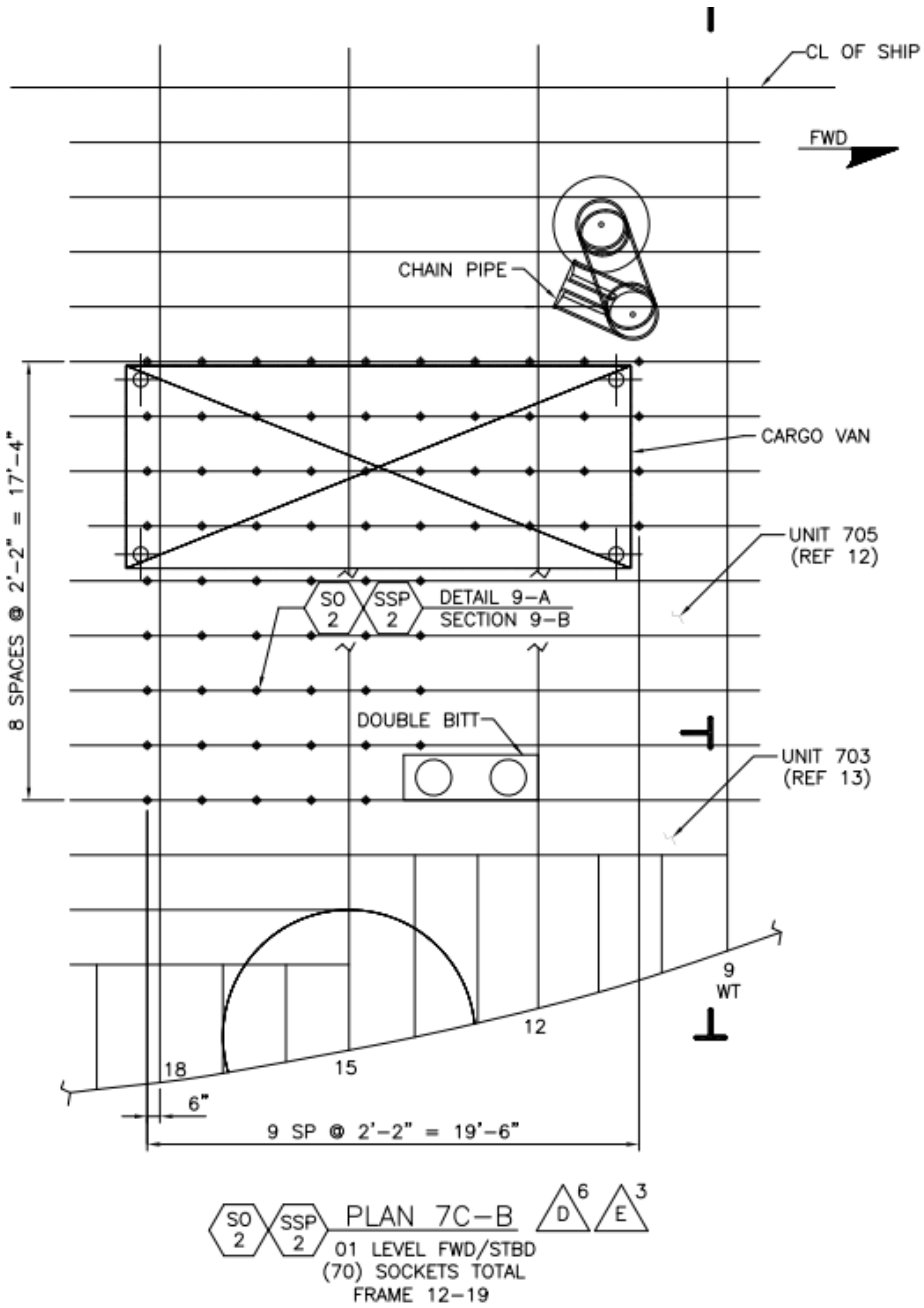

FIGURE 2. FORECASTLE, STBD SIDE DECK SOCKET LOCATIONS