DEPARTMENT OF THE NAVY
SOUTHERN DIVISION
NAVAL FACILITIES ENGINEERING COMMAND

PROJECT TITLE -
BEQ-PHASE IV

MARINE CORPS AIR STATION
BEAUFORT, SOUTH CAROLINA

CONSTRUCTION CONTRACT N62467-98-D-0690
BUILDING PACKAGE

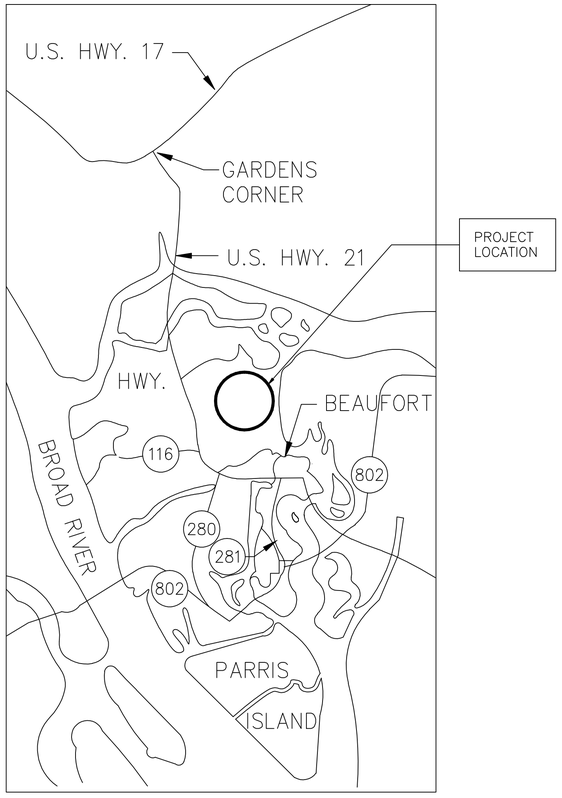

VICINITY MAP

NORTH

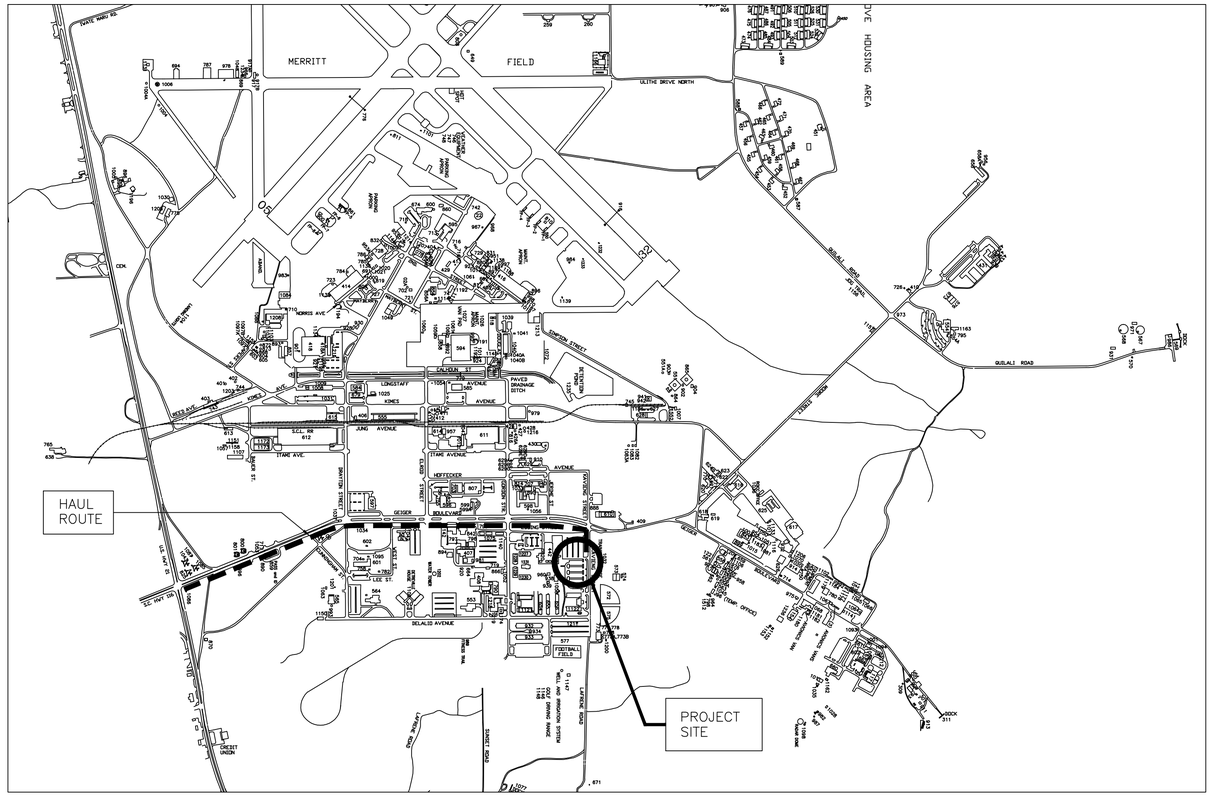

AREA MAP

NORTH

J.A. JONES MANAGEMENT SERVICES
J.A. JONES OF THE CAROLINAS
LOCKWOOD GREENE Consulting-Design-Construction

DSGN P. BLACKBURN	DR N. BABB	CHK AB / DY	
SUPV F.S.S.	CH ENGR P. BLACKBURN		
SUBMITTED BY (FIRM MEMBER-TITLE): V.P.		03-MAY-1999	DATE
TECHNICAL BRANCH			
FPE			

DRAWING REVISIONS

Rev.	Description	Prep By	Date	Apprvd.
0	FINAL DESIGN SUBMITTAL	NGB	5/3/99	PB/LB
1	ISSUE FOR RECORD	NGB	6/1/01	LB/DT

MCAS BEAUFORT, S.C.

BACHELOR ENLISTED QUARTERS - PHASE IV

ARCHITECTURAL COVER SHEET

APPROVED DATE EFD FOR COMMANDER, NAVFAC

Naval Facilities Engineering Command
Southern Division
Charleston, South Carolina

RECORD DRAWING DATE 01-JUN-01
CODE I.D. NO. 80091
DRAWING SIZE: D
SPEC. NO.06-98-0690
CONSTRN. CONTR. NO. N62467-98-D-0690
NAVFAC DRAWING NO. 5364373
SHEET 1 OF 34
AGE-01

$$$$ USERNAME $$$$ $$$$ DATE&TIME $$$$ $$$$ DESIGN FILE NAME $$$$

DRAWING NO.	REVISION NO.	NAVFAC DWG. NO.	GENERAL
AGE−01	0	5364373	Cover Sheet
AGE−02	0	5364374	Drawing Index

DRAWING NO.	REVISION NO.	NAVFAC DWG. NO.	CIVIL
CGE−01	1	5364354	Civil General Notes & Legend
CDP−02	1	5364355	Civil Demolition Plan
CDP−03	1	5364356	Civil Demolition Plan
CGP−04	1	5364357	Civil Grading & Drainage Plan
CGP−05	1	5364358	Civil Grading & Drainage Plan
CSP−06	1	5364359	Civil Site Plan
CSP−07	1	5364360	Civil Site Plan
CUP−08	2	5364361	Civil Utility Plan
CUP−09	1	5364362	Civil Utility Plan
CSD−10	1	5364363	Civil Sections & Details
CSD−11	1	5364364	Civil Sections & Details
CSD−12	2	5364365	Civil Sections & Details
CGP−13	1	5364366	Civil Soil Borings
CGP−14	1	5364367	Civil Soil Borings
CGP−15	1	5364368	Civil Soil Borings
CGP−16	1	5364369	Civil Soil Borings
CGP−17	1	5364370	Civil Soil Borings
CGP−18	1	5364371	Civil Soil Borings
CGP−19	1	5364372	Civil Soil Borings

DRAWING NO.	REVISION NO.	NAVFAC DWG. NO.	ARCHITECTURAL
AGE−03	1	5364375	Architectural Gen. Notes, Legends, Abbreviations & Arch. Drawing List
APL−01	2	5364376	Architectural 90 Module BEQ "A" Ground Level Floor Plan
APL−02	2	5364377	Architectural 90 Module BEQ "A" Second Level Floor Plan
APL−03	2	5364378	Architectural 90 Module BEQ "A" Third Level Floor Plan
APL−04	1	5364379	Architectural 90 Module BEQ "A" Roof Plan
APL−05	2	5364380	Architectural 60 Module BEQ "C" Ground & Second Level Floor Plan
APL−06	2	5364381	Architectural 60 Module BEQ "C" Third Level Floor Plan
APL−07	3	5364382	Architectural 60 Module BEQ "C" Roof Plan, Large Scale Module "B" Plan, Covered Seating Plan
APL−08	1	5364383	Architectural Community Center Plans
APL−09	1	5364384	Architectural Utility Building Plan, Elevation & Section
APL−10	4	5364385	Architectural Room Module Finish Plan
APL−11	2	5364386	Architectural Community Center Finish Plan
ARC−01	2	5364387	Architectural Typ. Floor Reflected Ceiling Plan − 90 Module BEQ "A"
ARC−02	2	5364388	Architectural Typ. Floor Reflected Ceiling Plan − 60 Module BEQ "C"
AEL−01	3	5364389	Architectural Interior Elevations − BEQ
AEL−02	1	5364390	Architectural Interior Elevations − Community Center
AEL−03	2	5364391	Architectural West Elevation @ 90 Module − BEQ "A"
AEL−04	2	5364392	Architectural East Elevation @ 90 Module − BEQ "A"
AEL−05	2	5364393	Architectural East & West Elevation @ 60 Module − BEQ "C"
AEL−06	1	5364394	Architectural North/South Elev. @ 60/90 Module BEQ, Comm. Ctr. Elevs.
ASE−01	3	5364395	Architectural Typical Cross Section 60/90 Module BEQ & Details
ASE−02	2	5364396	Architectural Stair Sections and Details
ASE−03	1	5364397	Architectural Sections @ Community Center
ASE−04	1	5364398	Architectural Sections @ Community Center and Covered Seating
ASC−01	1	5364399	Architectural Finish Schedule
ASC−02	1	5364400	Architectural Door Schedule & Door Types
ADE−01	1	5364401	Architectural Door Details
ADE−02	1	5364402	Architectural Door & Window Details
ALS−01	1	5364403	Architectural Landscape Plan
ALS−02	1	5364404	Architectural Landscape Plan
ALS−03	1	5364405	Architectural Landscape Details
ALS−04	1	5364406	Architectural Recreation Details

DRAWING NO.	REVISION NO.	NAVFAC DWG. NO.	STRUCTURAL
SGE−01	1	5364409	Structural Design Criteria & General Notes
SGE−02	1	5364410	Structural General Notes
SFS−10	2	5364411	Structural Foundation & Slab Plan − 90 Unit BEQ A
SFS−11	2	5364412	Structural Foundation & Slab Plan − 60 Unit BEQ B & C
SFS−12	1	5364413	Structural Slab Plans − Misc
SSD−20	1	5364414	Structural Concrete Sections & Details
SSD−21	1	5364415	Structural Concrete Sections & Details
SSD−30	1	5364416	Structural Steel Sections & Details
SSD−31	2	5364417	Structural Steel Sections & Details
SSD−32	1	5364418	Structural Sections & Details
SSD−33	1	5364419	Structural Sections & Details
SSD−34	1	5364420	Structural Schedules
SSP−40	1	5364421	Structural Roof Framing Plan − 90 Unit BEQ A
SSP−41	1	5364422	Structural Roof Framing Plan − 60 Unit BEQ B & C
SSP−42	1	5364423	Structural Roof Framing Plans − Misc
SSP−43	1	5364424	Structural 2nd & 3rd Flr Framing Plan − 60 Unit BEQ B & C
SSP−44	1	5364425	Structural Attic Framing Plan − 60 Unit BEQ B & C
SSP−45	1	5364426	Structural 2nd & 3rd Floor Framing Plan − 90 Unit BEQ A
SSP−46	1	5364427	Structural Attic Framing Plan − 90 Unit BEQ A

DRAWING NO.	REVISION NO.	NAVFAC DWG. NO.	MECHANICAL
MHP−10	1	5364433	Mechanical Legend Sheet
MHP−11	1	5364434	Mechanical BEQ A (90 Units) HVAC − Typical Floor Plan
MHP−12	1	5364435	Mechanical BEQ B & C (60 Units Each) HVAC − Typical Floor Plan
MHP−13	2	5364436	Mechanical Community Center HVAC/Mechanical Piping − Floor Plan
MHP−14	2	5364437	Mechanical BEQ A, B, C (90 & 60 Units) HVAC − Mechanical Room Sections
MHP−15	1	5364438	Mechanical BEQ A, B & C (90 & 60 Units) HVAC − Mechanical Room Partial Attic Plans
MHP−16	1	5364439	Mechanical BEQ A, B, C & Community Center HVAC − Typical Room Plan, Sections & Details
MHP−17	3	5364440	Mechanical BEQ A, B, C & Community Center HVAC − Schedules
MHP−18	1	5364441	Mechanical BEQ HVAC/Mechanical/Plumbing/Fire Protection Seismic Details
MHP−19			NOT USED
MMP−20	1	5364442	Mechanical BEQ A (90 Units) Mechanical Piping − Typical Floor Plan
MMP−21	1	5364443	Mechanical BEQ B & C (60 Units) Mechanical Piping − Typical Floor Plan
MMP−22	1	5364444	Mechanical Utility Building Mechanical Piping − Floor Plan, Sections & Details
MPP−30	1	5364445	Mechanical BEQ A (90 Units) Plumbing & Fire Protection − First Floor Plan
MPP−31	1	5364446	Mechanical BEQ A (90 Units) Plumbing & Fire Protection − Second & Third Floor Plan
MPP−32	1	5364447	Mechanical BEQ B & C (60 Units) Plumbing & Fire Protection − First Floor Plan
MPP−33	1	5364448	Mechanical BEQ B & C (60 Units) Plumbing & Fire Protection − Second & Third Floor Plan
MPP−34	1	5364449	Mechanical Community Center Plumbing & Fire Protection − Floor Plan
MPP−35	1	5364450	Mechanical BEQ A, B, C & Community Center Plumbing & Fire Protection − Riser Diagrams
MPP−36	2	5364451	Mechanical BEQ A, B, C & Community Center P&FP Typical Rm Details, Plumbing Details & Schedules

DRAWING NO.	REVISION NO.	NAVFAC DWG. NO.	ELECTRICAL
EEL−05	1	5364457	Electrical Lighting Control Schematics
EGE−07	2	5364458	Electrical Symbols List
ELP−10	2	5364459	Electrical BEQ "A" First Floor Lighting Plan
ELP−11	2	5364460	Electrical BEQ "A" Second Floor Lighting Plan
ELP−12	2	5364461	Electrical BEQ "A" Third Floor Lighting Plan
ELP−13	2	5364462	Electrical BEQ "B" & "C" First and Second Floor Lighting Plan
ELP−14	2	5364463	Electrical BEQ "B" & "C" Third Floor Lighting Plan
ELP−15	2	5364464	Electrical Community Center Lighting Plan
ELP−16	1	5364465	Electrical Utility Building Lighting Plan
ELP−17	1	5364466	Electrical BEQ "A", "B" & "C" Attic Lighting Plans
EPP−20	2	5364467	Electrical BEQ "A" First Floor Power Plan
EPP−21	1	5364468	Electrical BEQ "A" Second Floor Power Plan
EPP−22	1	5364469	Electrical BEQ "A" Third Floor Power Plan
EPP−23	1	5364470	Electrical BEQ "B" & "C" First and Second Floor Power Plan
EPP−24	1	5364471	Electrical BEQ "B" & "C" Third Floor Power Plan
EPP−25	1	5364472	Electrical Community Building Power Plan
EPP−26	2	5364473	Electrical Utility Building Power Plan
EPP−27	1	5364474	Electrical BEQ "A", "B" & "C" Attic Power Plan
ESC−30	2	5364475	Electrical Lighting Fixture Schedules
ESC−31	1	5364476	Electrical BEQ "A" Panel Schedules, Sheet 1 of 3
ESC−32	1	5364477	Electrical BEQ "A" Panel Schedules, Sheet 2 of 3
ESC−33	1	5364478	Electrical BEQ "A" Panel Schedules, Sheet 3 of 3
ESC−34	1	5364479	Electrical BEQ "B" Panel Schedules, Sheet 1 of 2
ESC−35	1	5364480	Electrical BEQ "B" Panel Schedules, Sheet 2 of 2
ESC−36	2	5364481	Electrical BEQ "C" Panel Schedules, Sheet 1 of 2
ESC−37	1	5364482	Electrical BEQ "C" Panel Schedules, Sheet 2 of 2
ESC−38	1	5364483	Electrical Panel Schedules
ESL−40	2	5364484	Electrical BEQ "A" Single Line Diagram, Sheet 1 of 4
ESL−41	2	5364485	Electrical BEQ "B" Single Line Diagram, Sheet 2 of 4
ESL−42	2	5364486	Electrical BEQ "C" Single Line Diagram, Sheet 3 of 4
ESL−43	2	5364487	Electrical Comm. Center & Utl. Single Line Diagram, Sheet 4 of 4
ESL−44	1	5364488	Electrical BEQ "A" Risers
ESL−45	1	5364489	Electrical BEQ "B & C" Risers
ESL−46	2	5364490	Electrical Community Center Risers
ESL−47	2	5364491	Electrical BEQ "A", "B" & "C" Comm. Center Fire Alarm Risers
ESS−50	2	5364492	Electrical BEQ "A" First Floor Systems Plan
ESS−51	1	5364493	Electrical BEQ "A" Second Floor Systems Plan
ESS−52	1	5364494	Electrical BEQ "A" Third Floor Systems Plan
ESS−53	1	5364495	Electrical BEQ "B" & "C" 1st & 2nd Floor Systems Plans
ESS−54	1	5364496	Electrical BEQ "B" & "C" Third Floor Systems Plan
ESS−55	1	5364497	Electrical Community Center Systems Plan
ESW−01	2	5364498	Electrical Site Work
ESW−02	1	5364499	Electrical Site Lighting and Power Plans
EXX−03	1	5364500	Electrical BEQ "A", "B" & "C" Large Scale Elect. & Tel. Rm. Plan

J.A. JONES MANAGEMENT SERVICES
J.A. JONES OF THE CAROLINAS
LOCKWOOD GREENE
Consulting·Design·Construction
Atlanta, Georgia

DSGN P. BLACKBURN DR N. BABB CHK AB / DY
SUPV F.S.S. CH ENGR P. BLACKBURN
SUBMITTED BY (FIRM MEMBER−TITLE): [signature] V.P. 03−MAY−1999 DATE
TECHNICAL BRANCH
FPE

DRAWING REVISIONS

Rev.	Description	Prep By	Date	Apprvd.
0	FINAL DESIGN SUBMITTAL	NGB	5/3/99	PB/LB
1	ISSUE FOR RECORD	NGB	6/1/01	LB/DT

MCAS BEAUFORT, S.C.
BACHELOR ENLISTED QUARTERS − PHASE IV
ARCHITECTURAL DRAWING INDEX

APPROVED DATE EFD FOR COMMANDER, NAVFAC

Naval Facilities Engineering Command
Southern Division
Charleston, South Carolina

RECORD DRAWING DATE 01−JUNE−01
CODE I.D. NO. 80091
DRAWING SIZE: D
SPEC. NO.06−98−0690
CONSTRN. CONTR. NO. N62467−98−D−0690
NAVFAC DRAWING NO. 5364374
SHEET 2 OF 34
AGE−02

$$$$ USERNAME $$$$ $$$$ DATE&TIME $$$$ $$$$ DESIGN FILE NAME $$$$

GENERAL NOTES:

1. NORTH ARROWS REFER TO PLANT NORTH AS DEFINED ON DWG CSG-06.

ABBREVIATIONS:

Ac	ACRE
AGGR	AGGREGATE
AR	ARGON GAS
AC	ASBESTOS CEMENT
ASPH	ASPHALT
BC	BACK OF CURB
BEQ	BACHELOR ENLISTED QUARTERS
BM	BENCH MARK
BITUM	BITUMINOUS
BCCMP	BITUMINOUS COATED CORRUGATED METAL PIPE
BE	BOTTOM ELEVATION
BLDG	BUILDING
CATVo	CABLE TELEVISION (OVERHEAD)
CATVu	CABLE TELEVISION (UNDERGROUND)
CISP	CAST IRON SOIL PIPE
CB	CATCH BASIN
℄	CENTER LINE
CWS	COOLING WATER SUPPLY
CWR	COOLING WATER RETURN
C	CHORD LENGTH
CO	CLEAN OUT
CL	CLEAR
COL	COLUMN
CA	COMPRESSED AIR
CONC	CONCRETE
CMU	CONCRETE MASONRY UNIT
COND	CONDENSATE
CMP	CORRUGATED METAL PIPE
CF	CUBIC FEET
CY	CUBIC YARD
C & G	CURB AND GUTTER
DIA	DIAMETER
DB	DITCH BOTTOM
DW	DOMESTIC WATER
DWG	DRAWING
DI	DROP INLET
DIP	DUCTILE IRON PIPE
E	EAST
EW	EACH WAY
EOP	EDGE OF PAVEMENT
Eo	ELECTRICAL CABLE (OVERHEAD)
Eu	ELECTRICAL CABLE (UNDERGROUND)
EMH	ELECTRICAL MANHOLE
ELEV	ELEVATION
EXIST	EXISTING
EXP	EXPANSION
EXT	EXTERIOR
FT	FEET
FIN	FINISH
FF	FINISH FLOOR
FH	FIRE HYDRANT
FW	FIRE WATER
FES	FLARED END SECTION
FL	FLOOR
FM	FORCE MAIN
GAL	GALLON
GP	GUARD POST
GPM	GALLONS PER MINUTE
GS	GALVANIZED STEEL
GV	GATE VALVE
GE	GUTTER ELEVATION
HDCP	HANDICAP
HDWL	HEADWALL
HDPE	HIGH DENSITY POLYETHYLENE
HP	HIGH POINT
HW	HOT WATER
HWR	HIGH TEMP, HIGH PRESSURE, WATER RETURN
HWS	HIGH TEMP, HIGH PRESSURE, WATER SUPPLY
H	HYDROGEN GAS
ID	INSIDE DIAMETER
IE	INVERT ELEVATION
IPF	IRON PIN FOUND
IPS	IRON PIN SET
L	LENGTH
LF	LINEAR FEET
LP	LOW POINT
MH	MANHOLE
MAX	MAXIMUM
MJ	MECHANICAL JOINT
MIN	MINIMUM
MON	MONUMENT
NG	NATURAL GAS
N	NITROGEN GAS
NONRCP	NON-REINFORCED CONCRETE PIPE
N/A	NOT APPLICABLE
NIC	NOT IN CONTRACT
NTS	NOT TO SCALE
NO.	NUMBER
OC	ON CENTER
OD	OUTSIDE DIAMETER
OHPL	OVERHEAD POWER LINE
O_2	OXYGEN GAS
PVMT	PAVEMENT
PC	POINT OF CURVE
PF	POINT OF FROG
PI	POINT OF INTERSECTION
PT	POINT OF TANGENCY
PVC	POINT OF VERTICAL CURVE
PVC	POLYVINYL CHLORIDE PIPE
PVI	POINT OF VERTICAL INTERSECTION
PVT	POINT OF VERTICAL TANGENCY
PE	POLYETHYLENE
PSF	POUNDS PER SQUARE FEET
PSI	POUNDS PER SQUARE INCH
PS	POINT OF SWITCH
PIV	POST INDICATOR VALVE
PW	POTABLE WATER
PWH	POTABLE WATER HOT SUPPLY
PWHR	POTABLE WATER HOT RETURN
PROP	PROPOSED
℄	PROPERTY LINE
R	RADIUS
RB	RIVER BIRCH (TREE)
RR	RAILROAD
RW	RAW WATER
RCP	REINFORCED CONCRETE PIPE
REINF	REINFORCEMENT
R/W	RIGHT OF WAY
S	SANITARY SEWER (GRAVITY)
SHT	SHEET
SO	SOUTH
SP	SPLASH PAD
STA	STATION
STM	STEAM
ST	STORM SEWER
T	TANGENT LENGTH
TBM	TEMPORARY BENCH MARK
TC	TOP OF CURB ELEVATION
TE	TOP ELEVATION
TEL	TELEPHONE CABLE (UNDERGROUND)
TG	TOP OF GRATE ELEVATION
TH	THICK
TW	TOP OF WALL ELEVATION
TD	TRENCH DRAIN
TYP	TYPICAL
TP	TOP OF PAVEMENT ELEVATION
TS	TOP OF SLAB ELEVATION
UNO	UNLESS NOTED OTHERWISE
VC	VERTICAL CURVE
VCP	VITRIFIED CLAY PIPE
W	WATER
WD	WIDE

LEGEND *

EXISTING		NEW	EXISTING		NEW
	LIGHT DUTY ASPHALT		Ⓜ	METER	Ⓜ
	MEDIUM DUTY ASPHALT			MONITOR NOZZLE	
BM	BENCHMARK	BM	AS NOTED	PARKING BUMPER	
	BUILDING		AS NOTED	PC – PT	∘
	BUSH / TREE		N/A	POINT OF INTERSECTION	
N/A	CAST CONCRETE			PIPE CAP	
	CATCH BASIN / DROP INLET			POST INDICATOR VALVE	
	CLEANOUT	CO		PROPERTY LINE	
	COLLECTOR PAN		N/A	RADIUS POINT	R
AS NOTED	COLUMN IDENTIFICATION	1		RAILROAD	
	CONCRETE MONUMENT			RAILROAD BUMPER	
N/A	CONSTRUCTION LIMITS			REDUCER	
900	CONTOURS	900		REMOVAL / DEMOLITION	N/A
N/A	CRUSHED STONE			RIVER / LAKE	N/A
	CURB / CURB AND GUTTER	N/A	N/A	SAND	
N/A	DOWNSPOUT CONNECTION			SECURITY FENCE	
	DRAINAGE SWALE			SIGN	
N/A	EARTH			SILT FENCE	
	EASEMENT			SLOPE	
N/A	FILTER FABRIC FENCE		B-1	SOIL BORING	
	FIRE HYDRANT		S-5	SOIL TYPE	N/A
	FLARED END SECTION		× 900.00	SPOT ELEVATION	× 900.00
N/A	FUTURE			SPRINKLER	
	GATE VALVE		AS NOTED	STRUCTURE IDENTIFICATION	1
	GATE VALVE W/ BOX		TP-2	TEST PIT	N/A
N/A	GRAVEL			THRUST BLOCK	
GP	GUARD POST			TREE	N/A
	GUARDRAIL			TREE LINE	
	HANDICAP			TRENCH DRAIN	
	HEADWALL (A)		W	UTILITY **	
	HEADWALL (B)			UTILITY POLE	
	HEADWALL (C)			WOOD FENCE	
IPF	IRON PIN	IPS	N/A	YARD INLET	
	LIFT STATION				
	LIGHT STANDARD				
	MANHOLE				

* NOT ALL SYMBOLS SHOWN ARE APPLICABLE TO THIS PROJECT.
** SEE ABBREVIATIONS LISTING FOR UTILITY IDENTIFICATION.
*** NOT USED WHEN SECTION AND/OR DETAIL IS CUT AND DRAWN ON SAME DWG.

SOUTH CAROLINA DHEC NOTES:

SOIL EROSION AND SEDIMENTATION CONTROL NOTES:

1. PERFORM ALL EARTHWORK OPERATIONS IN SUCH A MANNER AS TO CONTROL EROSION AND PREVENT SEDIMENTATION FROM ENTERING STREAMS OR BEING TRACKED ONTO ROADWAYS. COMPLY SPECIFICALLY AND COMPLETELY WITH EROSION AND SEDIMENTATION CONTROL PERMIT.
2. INSTALL AND OBTAIN APPROVAL OF ALL EROSION AND SEDIMENTATION CONTROL DEVICES PRIOR TO COMMENCEMENT OF CLEARING AND GRADING OPERATIONS.
3. ALL EROSION AND WATER QUALITY CONTROL STRUCTURES WILL BE INSPECTED FOR STABILITY AND OPERATION FOLLOWING EVERY RUN-OFF PRODUCING RAINFALL DURING CONSTRUCTION OR WEEKLY AS A MINIMUM.
4. MAKE NEEDED REPAIRS TO CONTROL STRUCTURES IMMEDIATELY UPON DETECTION OF DEFICIENCIES.
5. CLEAN SEDIMENT FROM BASINS WHEN THE MEASUREMENT STAFF INDICATES.
6. REMOVE SEDIMENT FROM SILT FENCES WHEN THE DEPTH REACHES APPROXIMATELY 4". SILT FENCES AND DIVERSION DITCHES SHALL BE REPAIRED AS NECESSARY TO MAINTAIN A BARRIER.
7. STABILIZATION MEASURES SHALL BE INITIATED AS SOON AS PRACTICAL IN PORTIONS OF THE SITE WHERE CONSTRUCTION ACTIVITIES HAVE TEMPORARILY OR PERMANENTLY CEASED, BUT IN NO CASE MORE THAN 14 DAYS AFTER THE CONSTRUCTION ACTIVITY IN THAT PORTION OF THE SITE HAS TEMPORARILY OR PERMANENTLY CEASED, UNLESS ACITIVITY IN THAT PORTION WILL RESUME WITHIN 21 CALENDAR DAYS.
8. REMOVE ALL TEMPORARY SEDIMENTATION CONTROL DEVICES NOT DESIGNATED TO REMAIN FROM SITE UPON COMPLETION OF GRADING AND FINAL ACCEPTANCE OF GRASSING, BUT NO LATER THAN 30 DAYS AFTER FINAL SITE STABILIZATION.
9. THE CONTRACTOR IS RESPONSIBLE FOR INSTALLATION OF ANY MEASURES NECESSARY TO PREVENT SITE EROSION AND SEDIMENTATION AS DETERMINED BY SCDHEC-OCRM.
10. SCDHEC-OCRM MUST BE NOTIFIED ONE WEEK PRIOR TO THE PRE-CONSTRUCTION CONFERENCE, ONE WEEK PRIOR TO THE COMMENCEMENT OF LAND DISTURBING ACTIVITY, AND ONE WEEK PRIOR TO THE FINAL INSPECTION.
11. GRATE INLETS AND TRENCH DRAINS SHALL BE PROTECTED BY BLOCK AND GRAVEL; CURB INLETS SHALL BE PROTECTED BY GRAVEL SEDIMENT FILTER IN ACCORDANCE WITH THE SC EROSION AND SEDIMENT CONTROL REGULATIONS.
12. CLEAN SEDIMENT FROM STORM DRAIN PIPES AFTER GRASSING.

SITE WORK CONSTRUCTION SEQUENCE:

1. RECEIVE STORM WATER MANAGEMENT AND EROSION AND SEDIMENTATION PERMIT FROM SCDHEC-OCRM.
2. CONTRACTOR, OWNER'S REPRESENTATIVE, AND REPRESENTATIVE FROM SCDHEC-OCRM MEET ON SITE TO DISCUSS IMPLEMENTATION OF EROSION AND SEDIMENTATION CONTROL DEVICES.
3. INSTALL GRAVEL ON CONSTRUCTION ENTRANCES AND EXITS.
4. INSTALL SILT FENCES, CLEARING AND GRUBBING ONLY AS REQUIRED FOR SILT FENCE CONSTRUCTION.
5. OWNER'S REPRESENTATIVE AND SCDHEC-OCRM REPRESENTATIVE MAY INSPECT SEDIMENTATION CONTROL STRUCTURES.
6. CLEAR, GRUB, AND GRADE SITE.
7. SEED AND STABILIZE WITH MULCH GRADED AREAS AS COMPLETED.
8. PROVIDE WEEKLY INSPECTION AND MAINTENANCE OF ALL SEDIMENTATION CONTROL DEVICES.
9. COMPLETE SITE IMPROVEMENTS AND INSTALL PERMANENT EROSION CONTROL SYSTEMS.
10. AFTER PERMANENT GRASSING IS APPROVED, REMOVE EROSION AND SEDIMENTATION CONTROL DEVICES NOT DESIGNATED TO REMAIN.

SECTION AND DETAIL IDENTIFICATION:

SECTION OR DETAIL NUMBER
DWG OR DWGS *** WHERE SECTION OR DETAIL IS CUT
SECTION OR DETAIL A CSD-10
SCALE:
CGE-01
DWG WHERE SECTION OR DETAIL IS DRAWN

J.A. JONES — OF THE CAROLINAS — CONSTRUCTION MANAGEMENT
LOCKWOOD GREENE — Consulting • Design • Construction

DSGN	M. WILLIAMS	DR	M. WILLIAMS	CHK	E. UCEDA
SUPV	P. SMITH	CP	ENGR	VAUGHN IMMONEN	
SUBMITTED BY (FIRM MEMBER-TITLE)				DATE	1/4/01
TECHNICAL BRANCH					
FPE					

DRAWING REVISIONS

Rev.	Description	Prep. By	Date	Approvd.
0	FINAL DESIGN SUBMITTAL	JMW	1MAY99	BF/JS
1	ISSUE FOR RECORD	EG	01JUN01	RB/RB

MCAS BEAUFORT, S.C.
BACHELOR ENLISTED QUARTERS - PHASE IV
CIVIL
GENERAL NOTES & LEGEND
DATE
APPROVED
ED FOR COMMANDER, NAVFAC

Naval Facilities Engineering Command
Southern Division
Charleston, South Carolina

RECORD DRAWING DATE	01JAN01
CODE I.D. NO.	80091
DRAWING SIZE:	D
SPEC. NO.	06-98-0690
CONSTRN. CONTR. NO.	N62467-98-D-0690
NAVFAC DRAWING NO.	5364354
SHEET 1 OF 19	

CGE-01

05035056 Scale1=2.0
P:\JS\CGE00001.dwg
01/24/01 20:02:30 00672910\
LGE-AT

$$$$ USERNAME $$$$ $$$$ DATE&TIME $$$$ $$$$ DESIGN FILE NAME $$$$

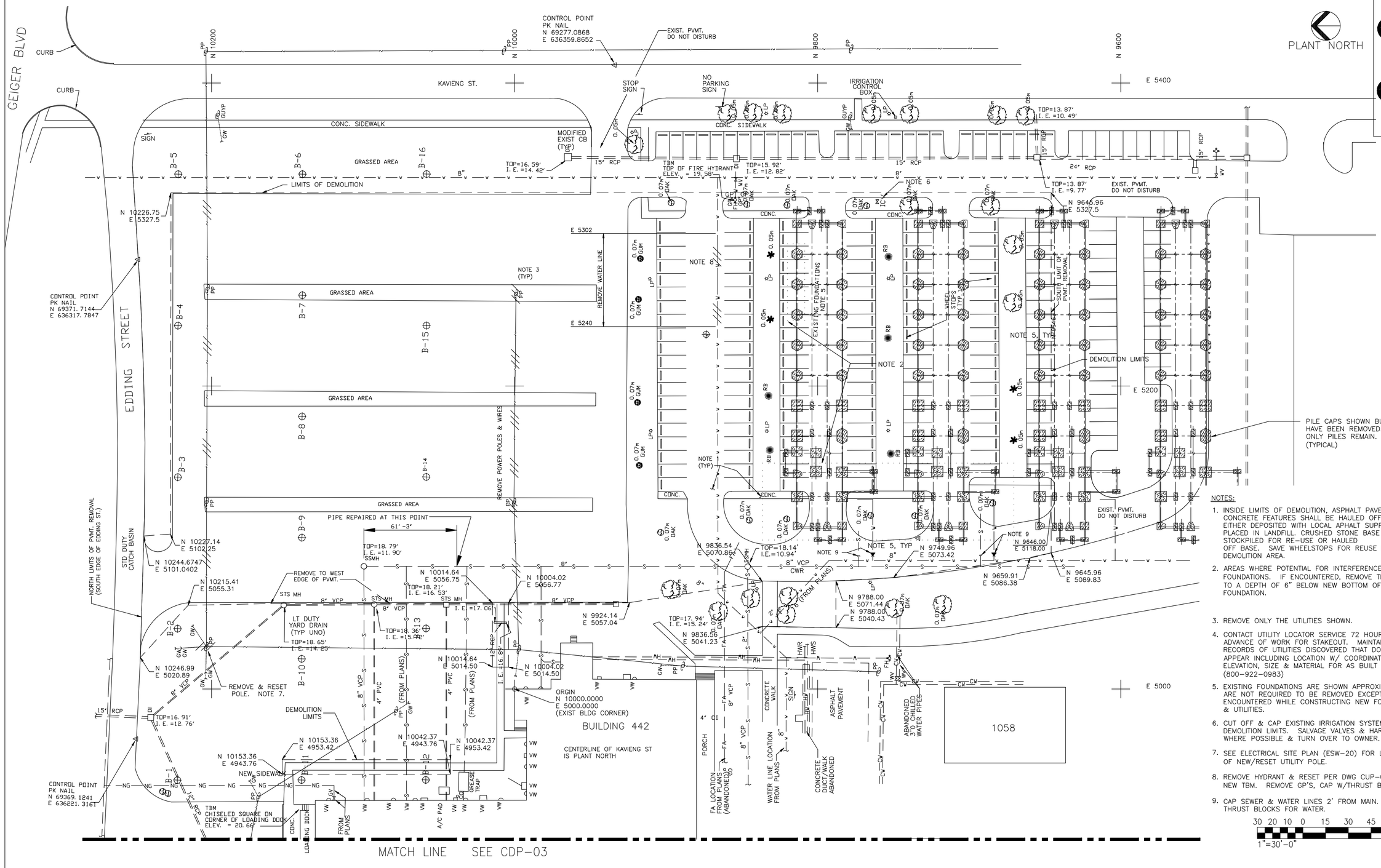

NOTES:

1. INSIDE LIMITS OF DEMOLITION, ASPHALT PAVEMENT & CONCRETE FEATURES SHALL BE HAULED OFF BASE & EITHER DEPOSITED WITH LOCAL APHALT SUPPLIER OR PLACED IN LANDFILL. CRUSHED STONE BASE MAY BE STOCKPILED FOR RE-USE OR HAULED OFF BASE. SAVE WHEELSTOPS FOR REUSE INSIDE DEMOLITION AREA.
2. AREAS WHERE POTENTIAL FOR INTERFERENCE WITH NEW FOUNDATIONS. IF ENCOUNTERED, REMOVE THE PILE(S) TO A DEPTH OF 6" BELOW NEW BOTTOM OF FOUNDATION.
3. REMOVE ONLY THE UTILITIES SHOWN.
4. CONTACT UTILITY LOCATOR SERVICE 72 HOURS IN ADVANCE OF WORK FOR STAKEOUT. MAINTAIN RECORDS OF UTILITIES DISCOVERED THAT DO NOT APPEAR INCLUDING LOCATION W/ COORDINATES, INVERT ELEVATION, SIZE & MATERIAL FOR AS BUILT DRAWINGS. (800-922-0983)
5. EXISTING FOUNDATIONS ARE SHOWN APPROXIMATELY & ARE NOT REQUIRED TO BE REMOVED EXCEPT WHERE ENCOUNTERED WHILE CONSTRUCTING NEW FOUNDATIONS & UTILITIES.
6. CUT OFF & CAP EXISTING IRRIGATION SYSTEM WITHIN DEMOLITION LIMITS. SALVAGE VALVES & HARDWARE WHERE POSSIBLE & TURN OVER TO OWNER.
7. SEE ELECTRICAL SITE PLAN (ESW-20) FOR LOCATION OF NEW/RESET UTILITY POLE.
8. REMOVE HYDRANT & RESET PER DWG CUP-08. RESET NEW TBM. REMOVE GP'S, CAP W/THRUST BLOCK.
9. CAP SEWER & WATER LINES 2' FROM MAIN. PROVIDE THRUST BLOCKS FOR WATER.

30 20 10 0 15 30 45 60
1"=30'-0"

JA JONES OF THE CAROLINAS
LOCKWOOD GREENE
Consulting · Design · Construction

DSGN	M WILLIAMS	DR	CHK E UCEDA
SUPV	P SMITH	CH ENGR	VAUGHN WAGONER

SUBMITTED BY (FIRM MEMBER-TITLE) Joseph Strand, V.P. DATE
TECHNICAL BRANCH
FPE

DRAWING REVISIONS

Rev.	Description	Prep By	Date	Apprvd.
0	FINAL DESIGN SUBMITTAL	JMM	3MAY99	BF/JS
1	ISSUE FOR RECORD	EU	1JUN01	RB/RB

EFD FOR COMMANDER, NAVFAC

BEAUFORT, S.C.
MCAS
BACHELOR ENLISTED QUARTERS - PHASE IV
CIVIL
DEMOLITION PLAN
APPROVED DATE

Naval Facilities Engineering Command
Southern Division
Charleston, South Carolina

RECORD DRAWING DATE	05 DEC 98
CODE I.D. NO.	80091
DRAWING SIZE:	D
SPEC. NO.	06-98-0690
CONSTRN. CONTR. NO.	N62467-98-D-0690
NAVFAC DRAWING NO.	5364355
SHEET 2	OF 19

CDP-02

LCE-AT 06/07/01 14:41:48 00672910\ P:\38\serv\060501\dwgs\CDP00002.dwg 05538028 Scale:1=2.0

$$$$ USERNAME $$$$ $$$$ DATE&TIME $$$$ $$$$ DESIGN FILE NAME $$$$

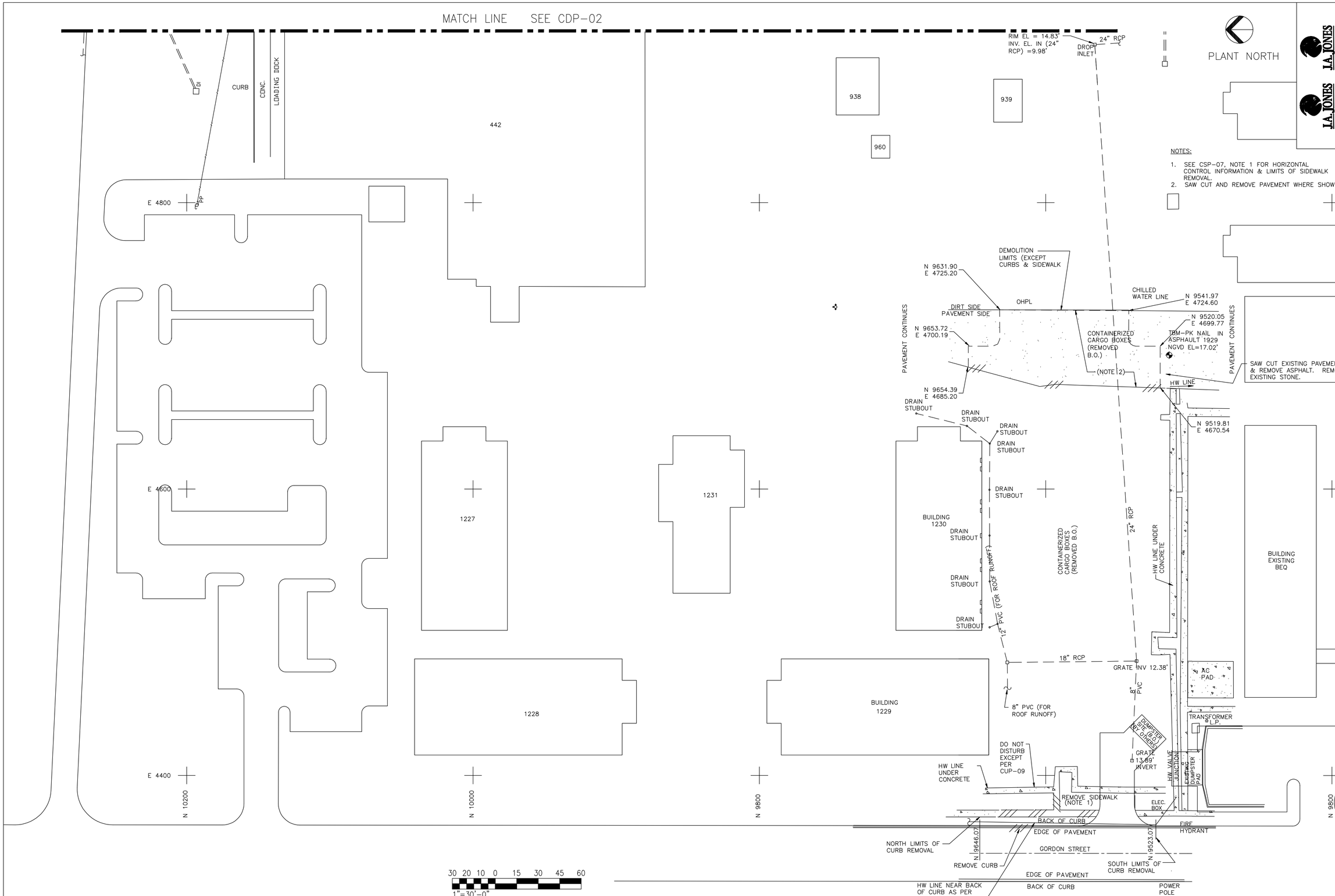

NOTES:

1. SEE CSP-07, NOTE 1 FOR HORIZONTAL CONTROL INFORMATION & LIMITS OF SIDEWALK REMOVAL.
2. SAW CUT AND REMOVE PAVEMENT WHERE SHOWN.

J.A. JONES MANAGEMENT SERVICES
J.A. JONES OF THE CAROLINAS
LOCKWOOD GREENE Consulting·Design·Construction

DSGN	DR	CHK
M WILLIAMS	M WILLIAMS	E UCEDA
SUPV	CH ENGR	VAUGHN WAGONER
P SMITH		

SUBMITTED BY (FIRM MEMBER-TITLE): Forest Israel, V.P. DATE
TECHNICAL BRANCH
FPE

DRAWING REVISIONS

Rev.	Description	Prep By	Date	Apprvd.
0	FINAL DESIGN SUBMITTAL	JMW	3MAY99	BF/JS
1	ISSUE FOR RECORD	EU	1JUN01	RB/RB

MCAS BEAUFORT, S.C.

BACHELOR ENLISTED QUARTERS - PHASE IV

CIVIL

DEMOLITION PLAN

APPROVED DATE EFD FOR COMMANDER, NAVFAC

Naval Facilities Engineering Command
Southern Division
Charleston, South Carolina

RECORD DRAWING DATE 05 DEC 98
CODE I.D. NO. 80091
DRAWING SIZE: D
SPEC. NO.06-98-0690
CONSTRN. CONTR. NO. N62467-98-D-0690
NAVFAC DRAWING NO. 5364356
SHEET 3 OF 19
CDP-03

$$$$ USERNAME $$$$ $$$$ DATE&TIME $$$$ $$$$ DESIGN FILE NAME $$$$

LGE-AT 01/24/01 20:01:47 00672910\ P:\35\CDP00003.dwg 05035056 Scale:1=2.0

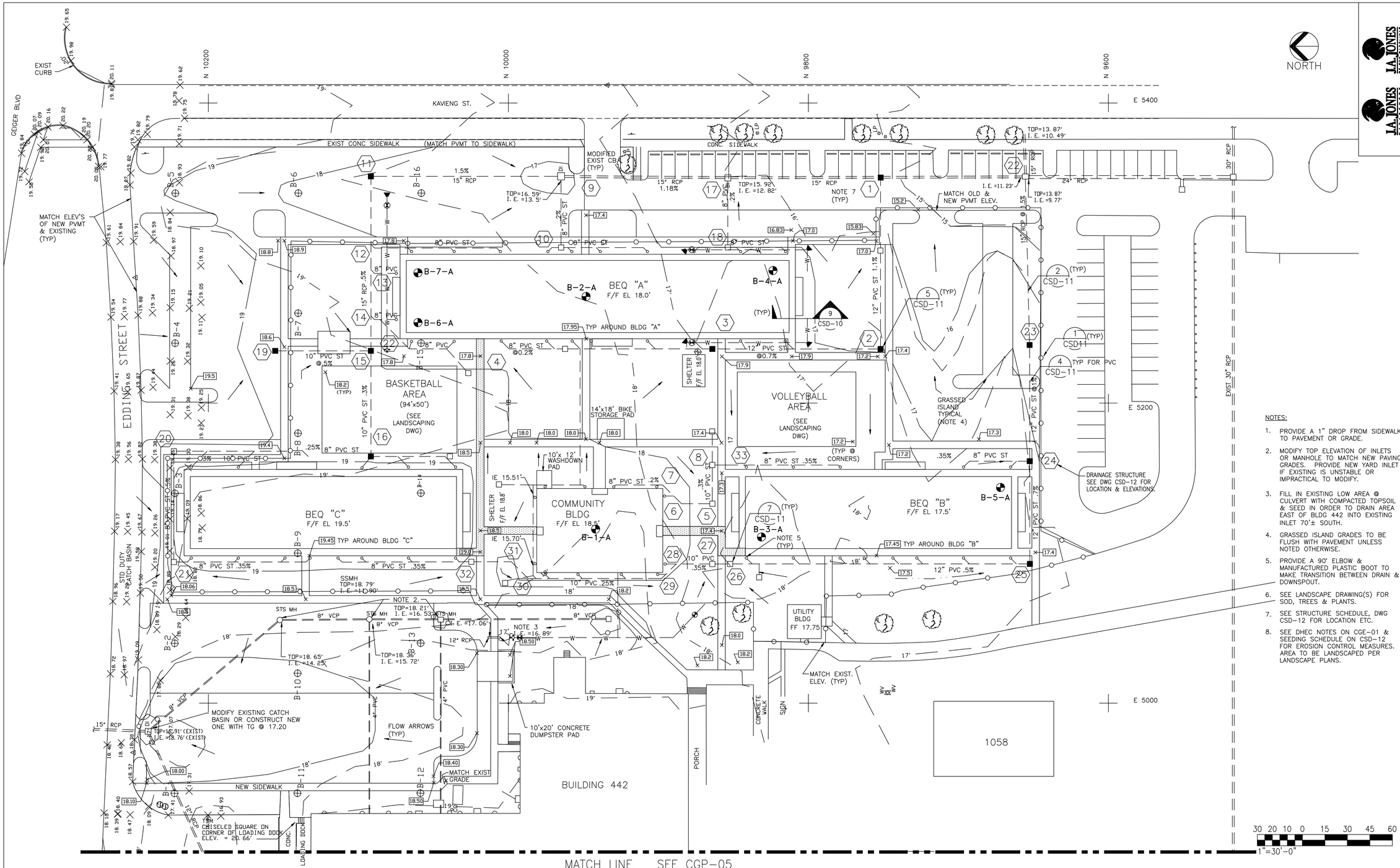

NOTES:

1. PROVIDE A 1" DROP FROM SIDEWALK TO PAVEMENT OR GRADE.
2. MODIFY TOP ELEVATION OF INLETS OR MANHOLE TO MATCH NEW PAVING GRADES. PROVIDE NEW YARD INLET IF EXISTING IS UNSTABLE OR IMPRACTICAL TO MODIFY.
3. FILL IN EXISTING LOW AREA @ CULVERT WITH COMPACTED TOPSOIL & SEED IN ORDER TO DRAIN AREA EAST OF BLDG 442 INTO EXISTING INLET 70'± SOUTH.
4. GRASSED ISLAND GRADES TO BE FLUSH WITH PAVEMENT UNLESS NOTED OTHERWISE.
5. PROVIDE A 90° ELBOW & MANUFACTURED PLASTIC BOOT TO MAKE TRANSITION BETWEEN DRAIN & DOWNSPOUT.
6. SEE LANDSCAPE DRAWING(S) FOR SOD, TREES & PLANTS.
7. SEE STRUCTURE SCHEDULE, DWG CSD-12 FOR LOCATION ETC.
8. SEE DHEC NOTES ON CGE-01 & SEEDING SCHEDULE ON CSD-12 FOR EROSION CONTROL MEASURES. AREA TO BE LANDSCAPED PER LANDSCAPE PLANS.

30 20 10 0 15 30 45 60
1"=30'-0"

J.A. JONES MANAGEMENT SERVICES
J.A. JONES OF THE CAROLINAS
LOCKWOOD GREENE Consulting·Design·Construction

DSGN M WILLIAMS	DR M WILLIAMS	CHK E UCEDA	
SUPV P SMITH	CH ENGR VAUGHN WAGONER		
SUBMITTED BY (FIRM MEMBER-TITLE)		DATE	
TECHNICAL BRANCH			
PPE			

DRAWING REVISIONS

Rev.	Description	Prep By	Date	Approvd.
0	FINAL DESIGN SUBMITTAL	JMW	3MAY99	BF/JS
1	ISSUE FOR RECORD	EU	1JUN01	RB/RB

MCAS BEAUFORT, S.C.

BACHELOR ENLISTED QUARTERS - PHASE IV

CIVIL

GRADING & DRAINAGE PLAN

APPROVED DATE

Naval Facilities Engineering Command
Southern Division
Charleston, South Carolina

RECORD DRAWING DATE 19 NOV 98
CODE I.D. NO. 80091
DRAWING SIZE: D
SPEC. NO.06-98-0690
CONSTRN. CONTR. NO. N62467-98-D-0690
NAVFAC DRAWING NO. 5364357
SHEET 4 OF 19
CGP-04

$$$$ USERNAME $$$$ $$$$ DATE&TIME $$$$ $$$$ DESIGN FILE NAME $$$$

LGE-AT 01/24/01 20:02:52 00672910\ P:\35\CGP00004.dwg 05035056 Scale:1=2.0

MATCH LINE SEE CGP-04

NORTH

NOTES:

1. ADJUST MH TOP AS NEEDED TO MATCH PROPOSED GRADE.
2. WHERE NEW PAVEMENT CONNECTS TO EXISTING PAVEMENT, SIDEWALK ETC, MATCH NEW FEATURES TO EXISTING GRADE.
3. USE CAUTION WHEN REGRADING IN THIS AREA UNDERGROUND ROOF DRAINS IF REGRADING & PAVING CONFLICTS WITH THEM.
4. SEE DHEC NOTES ON CGE-01 & SEEDING SCHEDULE ON CSD-12 FOR EROSION CONTROL MEASURES. AREA TO BE LANDSCAPED PER LANDSCAPE PLANS.

30 20 10 0 15 30 45 60
1"=30'-0"

J.A. JONES ENVIRONMENTAL SERVICES
J.A. JONES OF THE CAROLINAS
LOCKWOOD GREENE
Consulting•Design•Construction

DSGN	M WILLIAMS	DR	M WILLIAMS
SUPV	P SMITH	CHK	E UCEDA
SUBMITTED BY (FRM MEMBER-TITLE)		QA ENGR	VAUGHN WAGONER
TECHNICAL BRANCH			
FPE			

DRAWING REVISIONS

Rev.	Description	Prep By	Date	Apprvd.
0	FINAL SESSION SUBMITTAL	JMW	3MAY99	BF/JS
1	ISSUE FOR RECORD	EU	1-JUN01	RB/RB

MCAS BEAUFORT, S.C.
BACHELOR ENLISTED QUARTERS - PHASE IV
CIVIL
GRADING & DRAINAGE PLAN
APPROVED DATE
ETD FOR COMMANDER, NAVFAC

Naval Facilities Engineering Command
Southern Division
Charleston, South Carolina

RECORD DRAWING DATE	19 NOV 98
CODE I.D. NO.	80091
DRAWING SIZE:	D
SPEC. NO.	06-98-0690
CONSTRN. CONTR. NO.	N62467-98-D-0690
NAVFAC DRAWING NO.	5364358
SHEET 5	OF 19

CGP-05

LGE-AT 01/24/01 20:03:13 00672910\ P:\35\CGP00005.dwg 05035056 Scale:1=2.0

$$$$ USERNAME $$$$ $$$$ DATE&TIME $$$$ $$$$ DESIGN FILE NAME $$$$

GEIGER BLVD

EDDING STREET

EXIST CURB

KAVIENG ST.

N 10200 | N 10000 | N 9800 | N 9600 | E 5400

PROJECT COORDINATES
PK NAIL
N 9933.77
E 5412.07

NORTH

STOP SIGN

NO PARKING SIGN

IRRIGATION CONTROL BOX

TOP=13.87'
I.E.=10.49'

EAST LIMIT NOTE 4.

EXIST. CONC. SIDEWALK

CONC. SIDEWALK

SIGN

NEW PVMT

EXISTING PVMT

EXISTING PAVEMENT (NOTE 4) NORTH LIMIT

EXISTING PAVEMENT (NOTE 4) SOUTH LIMIT

1 CSD-10

N 10151.75
E 5310.63

E 5326.63

45'

N 10211.75
E 5317.63

N 9951.25

4.5' R (TYP)

N 9752.75
E 5310.63

N 9748.75

N 9683.75

BASE CONTROL POINT
PK NAIL
N 69371.7144
E 636317.7847
(PROJECT COORDINATE)
N 10248.48
E 5283.65

N 10225.75

N 10211.75

STAIRS (TYP)

N 10068
E 5295

BEQ "A"

N 10068
E 5247

N 9868.89
E 5232.27

SHELTER

N 9808.66
E 5233.68

4 CSD-10

COVERED WALKWAY (TYP)

N 9950.69

(BIKE STOR PAD) NOTE 5.

N 9883.89
E 5210.77

SHELTER

VOLLEYBALL AREA NOTE 3

N 9768.33
E 5171.01

E 5209.63

NEW PAVEMENT

3 CSD-10

PAVING TRANSITION SAW CUT

E 5200

24'

E 5200.63

BASKETBALL AREA NOTE 3

N 10034.21
E 5166.68

N 10021.21

N 9860.33

E 5175.75

CONC SIDEWALK (TYP)

80'x 10' MOTORCYCLE PAD STRIPES @ 5' SPACING

N 10229.75
E 5165.63

N 10030.37

E 5155.75

10'x 12' WASHDOWN PAD (ALTERNATE) 4" THK

8'

N 9981
E 5143

SIDEWALK CENTERED ON DOORS (TYP)

N 9842
E 5151

N 10212
E 5151

BEQ "C"

COMMUNITY BLDG

BEQ "B"

N 9842
E 5103

N 10212
E 5103

N 10137.68

N 9981
E 5087

N9619.04
E5104.61

EXISTING PAVEMENT (NOTE 4) WEST LIMIT

N 9744.98
E 5098.25

N 9651

8 CSD-10

N 10229.75
E 5066.63

N 9932.13
E 5071.63

N 9791.33
E 5065.67

10'x 20' MOTORCYCLE PAD STRIPES @ 5' SPACING

SIMILAR TO (TYPICAL) 4 CSD-10

N9623.48
E5095.69

UTILITY BLDG

EXIST CONCRETE WALK

ALTERNATE NOTE 6. 10 CSD-10

NEW PAVEMENT

1 CSD-12

N 9996.91
E 5034.48

2 CSD-10

N 9814.00
E 5043.00

3 (TYP) CSD-10

ALTERNATE 10'x20' CONCRETE DUMPSTER PAD W/ 6' HIGH WOOD SCREEN FENCE ON EAST, WEST & SOUTH SIDES

CONCRETE WALK

SIGN

ASPHALT PAVEMENT

E 5000

BUILDING 442

1058

PORCH

NEW SIDEWALK

EXIST SIDEWALK

BASE CONTROL POINT
PK NAIL
N 69369.1241
E 636221.3161
(PROJECT COORDINATE)
N 10249.79
E 4967.12

TBM
CHISELED SQUARE ON CORNER OF LOADING DOCK
ELEV. = 20.66'

CONC.

LOADING DOCK

9'x 18' PARKING SPACES 7 CSD-10

MATCH LINE SEE CSP-07

30 20 10 0 15 30 45 60
1"=30'-0"

NOTES:

1. BUILDING COORDINATES SHOWN ARE TO EXTERIOR BUILDING CORNER.
2. ALL SIDEWALKS 5' WIDE EXCEPT WHERE NOTED OR MATCHING EXISTING.
3. SEE LANDSCAPING DWG FOR SHELTERS, BASKETBALL, & VOLLEYBALL AREAS.
4. SLURRY SEAL EXISTING PAVEMENT SURFACE TO THE LIMIITS SHOWN.
5. PROVIDE A 4" THICK CONCRETE PAD WITH TWO SETS OF MADRAX BICYCLE LOCKERS EACH HOLDING 10 BICYCLES. PAD DIMENSIONS 18'x 14' (6" BEYOND LOCKERS) TWO MODEL DL-100-10-G. PAINT IN FIELD; MATCH BUILDING COLOR. (PHONE: 800-448-7931). ANCHOR PER MFR.'S RECOMMENDATIONS.
6. ALL ASPHALT PAVEMENT SHALL BE LIGHT DUTY PER DETAIL 1/CSD-10. HOWEVER ALTERNATE FOR MEDIUM DUTY TO COVER AREA SHOWN WITH CROSS HATCHING.
7. PLANT COORDINATE SYSTEM ESTABLISHED AS FOLLOWS:

   CORNER OF BLDG 442 SHOWN IDENTIFIED AS N 1000, E 5000 AND TRUE NORTH (FROM CONTROL) ROTATED COUNTER CLOCKWISE 1°45'32" TO FORM PLANT NORTH.

J.A. JONES
J.A. JONES CONSTRUCTION SERVICES
LOCKWOOD GREENE
Consulting-Design-Construction

DSGN M WILLIAMS | DR M WILLIAMS | CHK E UCEDA
SUPV P SMITH | QA/QC ENGR VAUGHN IMMONEN
SUBMITTED BY (FIRM MEMBER-TITLE) Barry Smith, V.P. DATE
TECHNICAL BRANCH
FPE

DRAWING REVISIONS

Rev.	Description	Prep By	Date	Approvd.
0	FINAL DESIGN SUBMITTAL	JMW	3MAY99	BF/JS
1	ISSUE FOR RECORD	EU	1-JUN01	RB/RB

BEAUFORT, S.C.
BACHELOR ENLISTED QUARTERS - PHASE IV
CIVIL
SITE PLAN
DATE
MCAS
APPROVED

Naval Facilities Engineering Command
Southern Division
Charleston, South Carolina

EFD FOR COMMANDER, NAVFAC

RECORD DRAWING DATE
14 NOV 98

CODE I.D. NO.	80091
DRAWING SIZE:	D
SPEC. NO.	06-98-0690
CONSTRN. CONTR. NO.	N62467-98-D-0690
NAVFAC DRAWING NO.	5364359
SHEET 6	OF 19

CSP-06

LCE-AT 01/24/01 20:07:24 0067291\0\ P:\35\CSP00006.dwg 05035656 Scale:1=2.0

$$$$ USERNAME $$$$ $$$$ DATE&TIME $$$$ $$$$ DESIGN FILE NAME $$$$

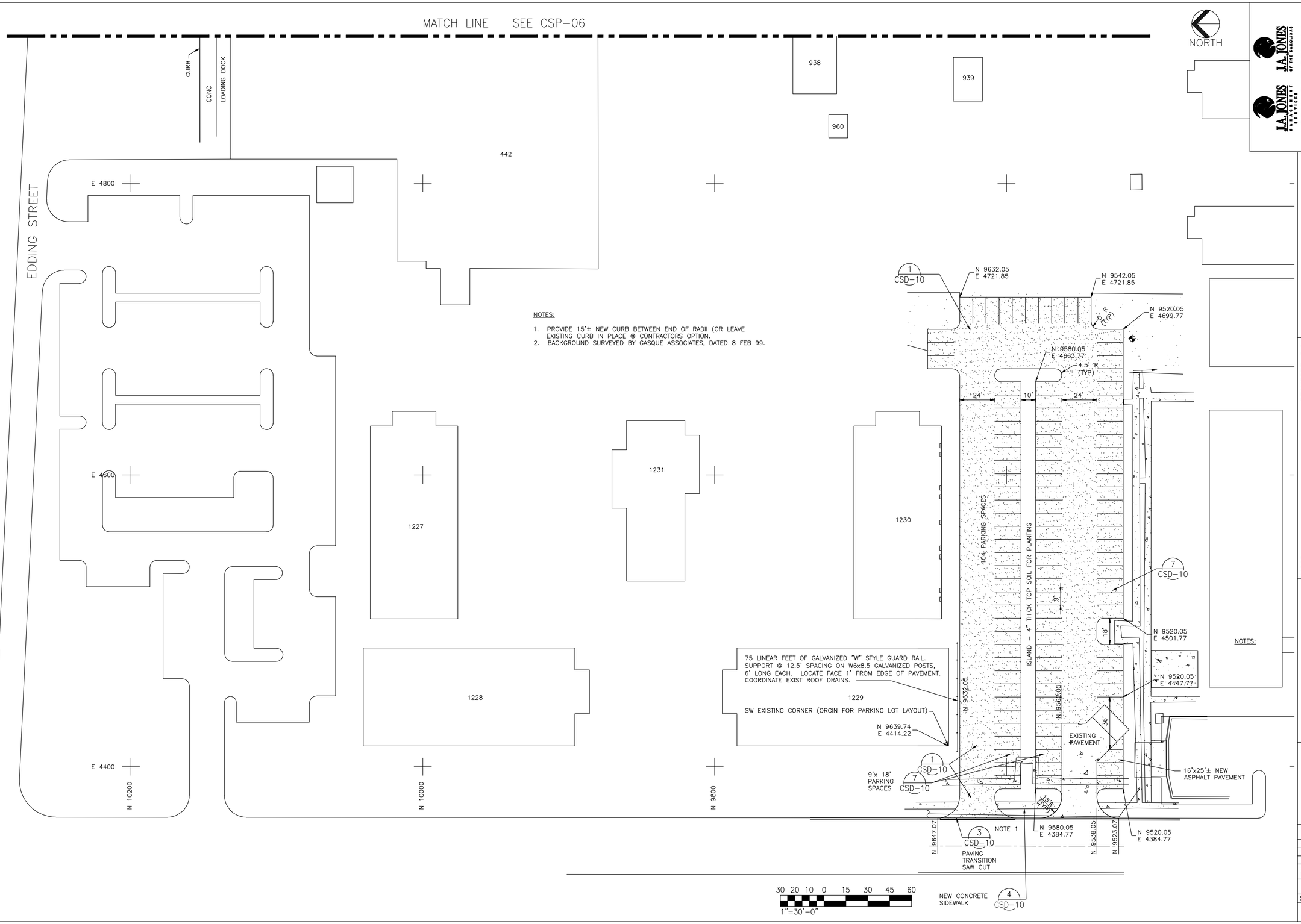

NOTES:

1. PROVIDE 15'± NEW CURB BETWEEN END OF RADII (OR LEAVE EXISTING CURB IN PLACE @ CONTRACTORS OPTION.
2. BACKGROUND SURVEYED BY GASQUE ASSOCIATES, DATED 8 FEB 99.

NOTES:

J.A. JONES MANAGEMENT SERVICES
J.A. JONES OF THE CAROLINAS
LOCKWOOD GREENE Consulting·Design·Construction

DSGN	M WILLIAMS	DR	M WILLIAMS
CHK	E UCEDA	SUPV	P SMITH
CH ENGR	VAUGHN WAGONER	SUBMITTED BY (FIRM MEMBER-TITLE)	
DATE		TECHNICAL BRANCH	
FPE			

DRAWING REVISIONS

Rev.	Description	Prep By	Date	Approvd.
0	FINAL DESIGN SUBMITTAL	JMW	3MAY99	BF/JS
1	ISSUE FOR RECORD	EU	1JUN01	RB/RB

MCAS BEAUFORT, S.C.

BACHELOR ENLISTED QUARTERS – PHASE IV

CIVIL
SITE PLAN

APPROVED DATE

EFD FOR COMMANDER, NAVFAC

Naval Facilities Engineering Command
Southern Division
Charleston, South Carolina

RECORD DRAWING DATE 14 NOV 98
CODE I.D. NO. 80091
DRAWING SIZE: D
SPEC. NO.06-98-0690
CONSTRN. CONTR. NO. N62467-98-D-0690
NAVFAC DRAWING NO. 5364360
SHEET 7 OF 19
CSP-07

$$$$ USERNAME $$$$ $$$$ DATE&TIME $$$$ $$$$ DESIGN FILE NAME $$$$

LGE-AT 01/24/01 20:07:48 00672910\ P:\35\CSP00007.dwg 05035056 Scale:1=2.0

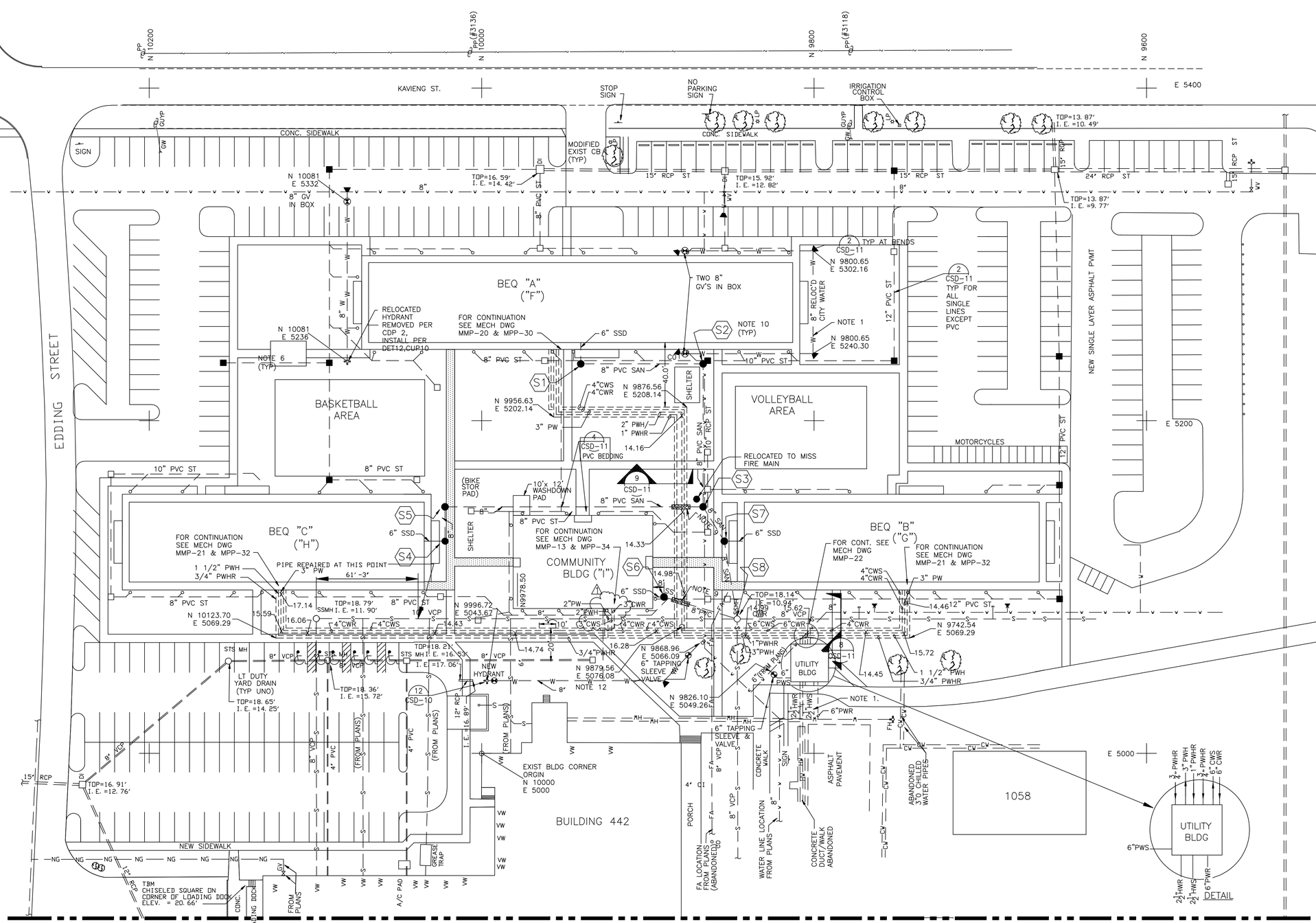

LEGEND

X 14.46	ELEVATION OF TOP OF PIPE
("F")	ACCORDING TO OWEN WEBB THOSE ARE THE BLDGS. LETTERS.

NOTES:

1. ROUTE NEW HWR & HWS LINES APPROXIMATELY 390 LF TO STA A-4 WEST OF THIS POINT INSIDE EXISTING CONCRETE VAULTS.
2. SEE CGP4 FOR DATA ON STORM WATER (ST) LINES.
3. SEE ESW-01 FOR ABOVE & UNDERGROUND ELECTRICAL, COMMUNICATION LINES & LIGHTING.
4. ALL OUTSIDE SEWER LINES IE'S ARE 4.5' BELOW FINISH FLOOR & SLOPE @ 0.4% TO MH BETWEEN BEQ "B" & COMMUNITY BUILDING.
5. LAY GRAVITY SANITARY SEWER LINES PRIOR TO PRESSURED LINES & MODIFY ELEVATIONS OF PRESSURED LINES TO AVOID INTERFERENCES.
6. FOR STORM DRAIN DATA REFER TO CGP-04 OR CSD-12 (OMITTED FOR SAKE OF BREVITY).
7. MINIMUM DEPTH OF COVER FOR 8" WATER MAIN IS 5'.
8. PRIOR TO START OF WORK SCAN COMPLETE SITE FOR EXISTING UTILITIES USING ELECTRONIC DEVICES. RECORD NEW OR CORRECTED LOCATIONS FOR AS BUILT RECORDS.
9. PROVIDE A TRANSITION TO 8" DIP TO 10' N. & S. OF POTABLE WATER LINES WHERE CROSSING. ENCASE DIP IN CONCRETE COVERING PIPE IN 6" CONCRETE ON ALL SIDES. (REQ'D. AT 2 LOCATIONS)
10. REFER TO SANITARY SEWER STRUCTURE SCHEDULE ON DWG CSD-12 FOR LOCATIONS & ELEV'S.
11. SEE DWG ESW-01 FOR ELECTRICAL SITE PLAN.
12. CONNECT NEW PW LINE TO WATER MAIN HERE.

DRAWING REVISIONS

Rev.	Description	Prep By	Date	Approvd.
0	FINAL DESIGN SUBMITTAL	JMW	3MAY99	BF/JSS
1	MISC CHANGES	PJS	5MAY99	BF/JS
2	ISSUE FOR RECORD	EU	1JUN01	RB/RB

J.A. JONES CONSTRUCTION SERVICES
J.A. JONES ENVIRONMENTAL SERVICES
LOCKWOOD GREENE
Consulting-Design-Construction

DSGN	M WILLIAMS	DR	W WILLIAMS
SUPV	P SMITH	CHK	E UCEDA
SUBMITTED BY (FIRM MEMBER-TITLE)		QA/QC	VAUGHN IMMZONER
TECHNICAL BRANCH			
FPE			

ETD FOR COMMANDER, NAVFAC

BEAUFORT, S.C.
MCAS
BACHELOR ENLISTED QUARTERS
CIVIL
UTILITY PLAN

Naval Facilities Engineering Command
Southern Division
Charleston, South Carolina

RECORD DRAWING DATE	14 NOV 98
CODE I.D. NO.	80091
DRAWING SIZE:	D
SPEC. NO.	06-98-0690
CONSTRN. CONTR. NO.	N62467-98-D-0690
NAVFAC DRAWING NO.	5364361
SHEET 8	OF 19

CUP-08

LGE-AT 01/24/01 20:08:12 00672910\ P:\35\CUP00008.dwg 05035056 Scale:1=2.0

$$$$ USERNAME $$$$ $$$$ DATE&TIME $$$$ $$$$ DESIGN FILE NAME $$$$

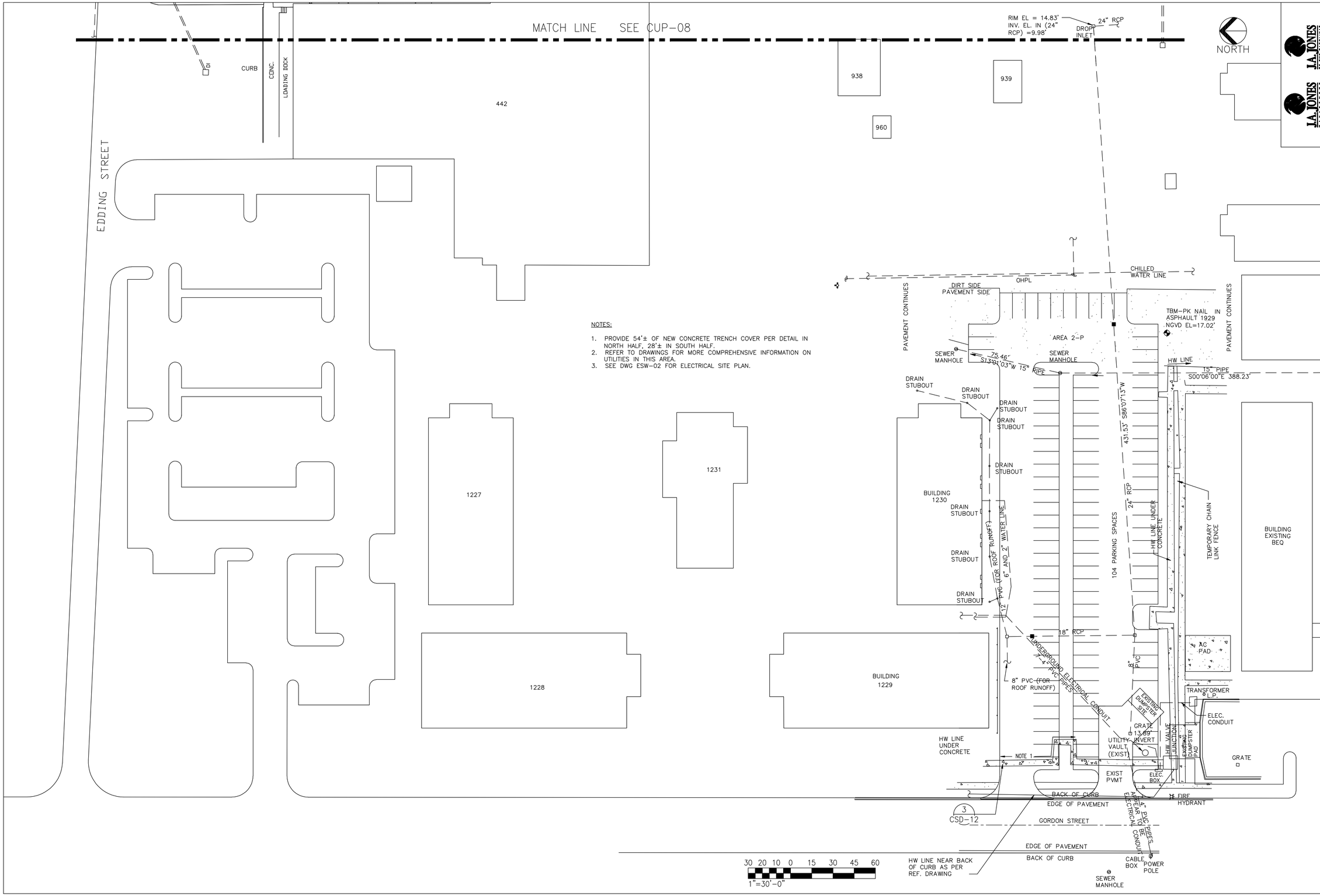

NOTES:

1. PROVIDE 54'± OF NEW CONCRETE TRENCH COVER PER DETAIL IN NORTH HALF, 28'± IN SOUTH HALF.
2. REFER TO DRAWINGS FOR MORE COMPREHENSIVE INFORMATION ON UTILITIES IN THIS AREA.
3. SEE DWG ESW-02 FOR ELECTRICAL SITE PLAN.

J.A. JONES MANAGEMENT SERVICES
J.A. JONES OF THE CAROLINAS
LOCKWOOD GREENE Consulting·Design·Construction

DSGN	M WILLIAMS	DR	M WILLIAMS
CHK	E UCEDA	SUPV	P SMITH
CH ENGR	VAUGHN WAGONER	SUBMITTED BY (FIRM MEMBER-TITLE)	
DATE		TECHNICAL BRANCH	
FPE			

DRAWING REVISIONS

Rev.	Description	Prep By	Date	Apprvd.
0	FINAL DESIGN REVIEW	JMW	3MAY99	BF/JS
1	ISSUE FOR RECORD	EU	1JUN01	RB/RB

MCAS BEAUFORT, S.C.

BACHELOR ENLISTED QUARTERS - PHASE IV

CIVIL

UTILITY PLAN

APPROVED DATE EFD FOR COMMANDER, NAVFAC

Naval Facilities Engineering Command
Southern Division
Charleston, South Carolina

RECORD DRAWING DATE 14 NOV 98
CODE I.D. NO. 80091
DRAWING SIZE: D
SPEC. NO.06-98-0690
CONSTRN. CONTR. NO. N62467-98-D-0690
NAVFAC DRAWING NO. 5364362
SHEET 9 OF 19
CUP-09

$$$$ USERNAME $$$$ $$$$ DATE&TIME $$$$ $$$$ DESIGN FILE NAME $$$$

LGE-AT 01/24/01 20:08:31 00672910\ P:\35\CUP00009.dwg 05035056 Scale:1=2.0

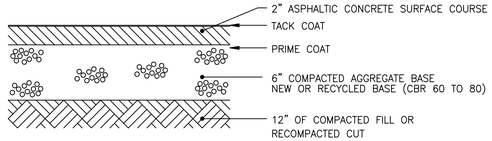

LIGHT DUTY PAVEMENT
DETAIL 1 CSP-06, CSP-07
N.T.S. CSD-10

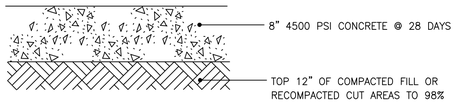

CONCRETE PAVEMENT
DETAIL 2 CSP-06
N.T.S. CSD-10

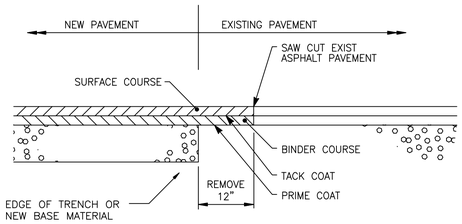

PAVEMENT TRANSITION
DETAIL 3 CSP-06, CSP-07
N.T.S. CSD-10

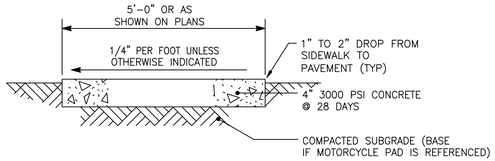

NOTES:

1. EXPANSION JOINTS: 1/2" WIDE, FULL DEPTH, AROUND EMBEDDED ITEMS SUCH AS LIGHT BASES, AND AT ABUTTING STRUCTURES SUCH AS BUILDINGS OR CURBS.
2. CONTRACTION JOINTS: 1/16" – 1/4" WIDE, 1" DEEP, ARRANGE TO FORM PANELS 5' MAXIMUM IN EITHER DIRECTION.

CONCRETE SIDEWALK
DETAIL 4 CSP-06, CSP-07
N.T.S. CSD-10

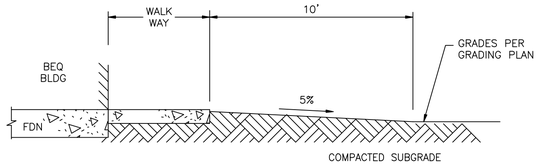

TYP GRADING
SECTION 9 CGP-04
N.T.S. CSD-10

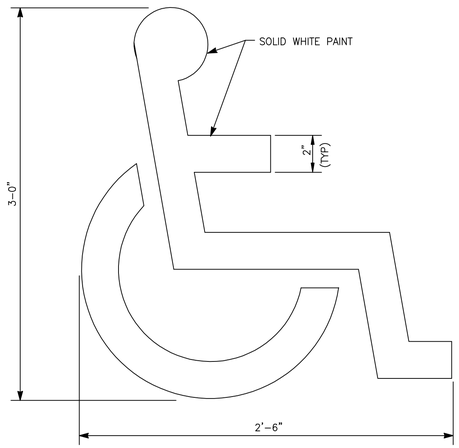

NOTES:

1. PAINT SHALL BE WHITE CHLORINATED RUBBER BASED FACTORY-MIXED, QUICK-DRYING, AND NON-BLEEDING, COMPLYING WITH FEDERAL SPEC. TT-P-115.
2. THICKNESS REQUIRED IS 15 MILS.
3. CONSULT LOCAL AUTHORITIES FOR REQUIRED VARIATIONS.

HANDICAP SYMBOL
DETAIL 5
N.T.S. CSD-10

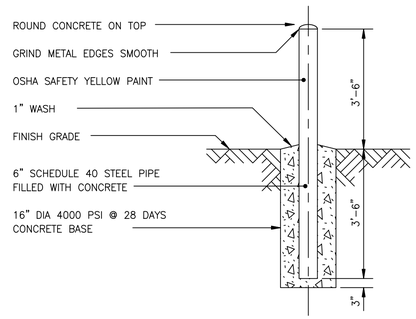

SECTION IN EARTH OR AGGREGATE

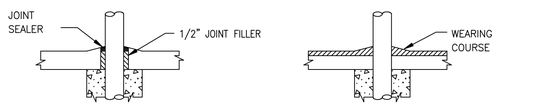

SECTION IN CONCRETE PAVEMENT SECTION IN BITUMINOUS PAVEMENT

GUARD POST
DETAIL 6
N.T.S. CSD-10

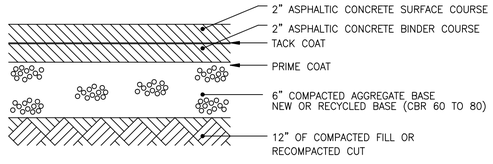

MEDIUM DUTY PAVEMENT
DETAIL 10 CSP-06
N.T.S. CSD-10

ONLY TO BE USED IF ALTERNATE ACCEPTED – CHECK PRIOR TO USE

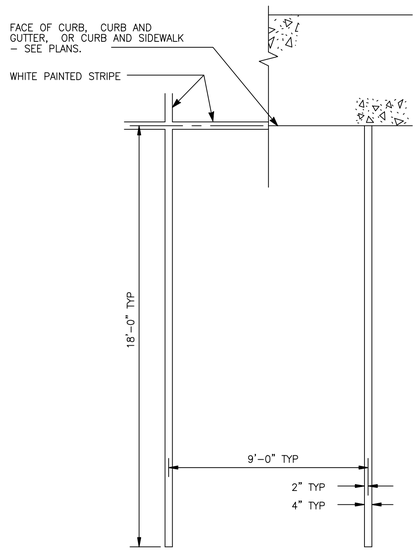

PARKING SPACE
DETAIL 7 CSP-06, CSP-07
N.T.S. CSD-10

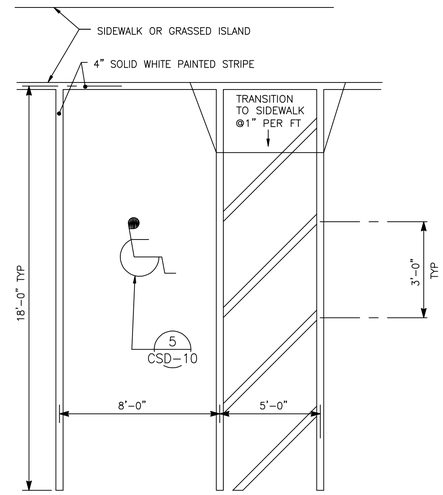

HANDICAP PARKING SPACE
DETAIL 8 CSP-06
N.T.S. CSD-10

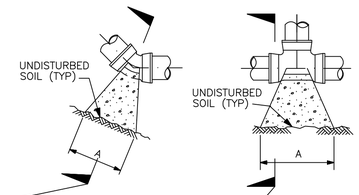

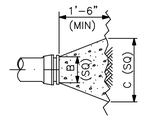

PLAN & ELEVATION-PLUGS

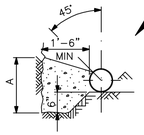

SECTION

PIPE SIZE	90° BEND	45° BEND	PLUGS		MIN. COVER
	A	A	B	C	
3"	15"	12"	4"	12"	3'
6"	24"	18"	8"	21"	5'
8"	36"	24"	10"	27"	5'

NOTES:

1. CONCRETE SHALL HAVE A COMPRESSIVE STRENGTH OF 3000 PSI @ 28 DAYS MINIMUM.
2. "A" FOR TEES EQUALS "A" FOR 90° BEND OF THE SAME SIZE AS BRANCH TO BE BLOCKED.
3. THRUST BLOCKS SHALL BE USED AT ALL TEES, BENDS, PLUGS, AND FIRE HYDRANTS ON WATER AND FIRE PROTECTION LINES.
4. TIE RODS AND CLAMPS INSTALLED PER NFPA 24 MAY BE USED IN LIEU OF THRUST BLOCKS.

THRUST BLOCK
DETAIL 11 CUP-08
N.T.S. CSD-10

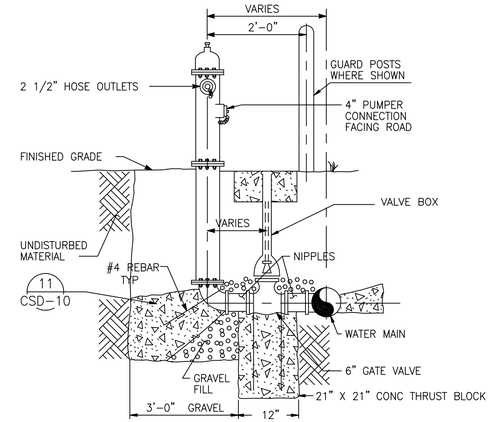

NOTE:
TEE, VALVE, AND ELBOW MUST BE RESTRAINED BY THRUST BLOCKS, AS SHOWN, OR TIE RODS. WRAP ALL METAL IN CONTACT WITH SOIL IN 8 MIL POLYETHYLENE WRAP PER AWWA, C 105.

FIRE HYDRANT
DETAIL 12 CUP-08
N.T.S. CSD-10

LOCKWOOD GREENE
Consulting Engineers, Inc.
J.A. JONES
OF THE CAROLINAS
J.A. JONES
MANAGEMENT SERVICES

DSGN	M WILLIAMS	DR	M WILLIAMS	CHK	E UCEDA
SUPV	P SMITH	CH ENGR	VAUGHN WAGONER		
SUBMITTED BY (FIRM MEMBER-TITLE)				DATE	
TECHNICAL BRANCH					
FPE					

DRAWING REVISIONS

Rev.	Description	Prep By	Date	Apprvd.
0	FINAL DESIGN REVIEW	JMM	3MAY99	BF/JS
1	ISSUE FOR RECORD	EU	1JUN01	RG/RB

BEAUFORT, S.C.
MCAS
BACHELOR ENLISTED QUARTERS
CIVIL
SECTIONS & DETAILS
DATE
APPROVED

Naval Facilities Engineering Command
Southern Division
Charleston, South Carolina

EFD FOR COMMANDER, NAVFAC

RECORD DRAWING DATE 20 NOV 98
CODE I.D. NO. 80091
DRAWING SIZE: D
SPEC. NO.06-98-0690
CONSTRN. CONTR. NO. N62467-98-D-0690
NAVFAC DRAWING NO. 5364363
SHEET 10 OF 19
CSD-10

LGE-AT 01/24/01 20:06:16 00672910\ P:\35\CS000010.dwg 05035056 Scale:1=2.0

$$$$ USERNAME $$$$ $$$$ DATE&TIME $$$$ $$$$ DESIGN FILE NAME $$$$

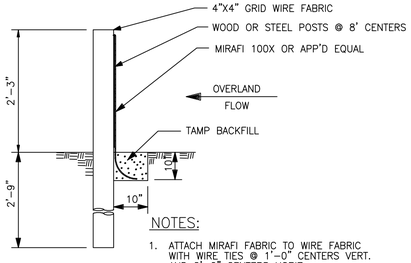

NOTES:

1. ATTACH MIRAFI FABRIC TO WIRE FABRIC WITH WIRE TIES @ 1'-0" CENTERS VERT. AND 2'-0" CENTERS HORIZ.
2. SEE PLANS FOR LOCATION AND LENGTH OF SILT FENCE.
3. "ENVIROFENCE" BY MIRAFI OR EQUAL MAY BE USED IF APPROVED BY LOCAL INSPECTOR.
4. REMOVE FENCE AFTER AREA STABILIZED WITH GRASS OR SOD.

SILT FENCE
DETAIL 1 CGP-04, CGP-05
N.T.S. CSD-11

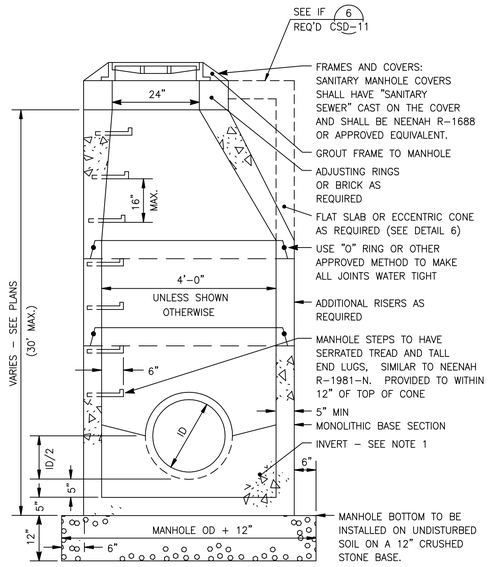

NOTES:

1. FLOWLINE OF MANHOLE MAY BE FORMED IN CONCRETE, BUILT UP WITH BRICK AND MORTAR, OR BY LAYING A PIPE THROUGH MANHOLE. THE TOP BEING BROKEN OUT LATER.
2. GROUT ANNULAR SPACE BETWEEN WALL AND PIPE WITH NON-SHRINK MORTAR TO INSURE ZERO LEAKAGE.

SANITARY MANHOLE
DETAIL 3 CUP-08
N.T.S. CSD-11

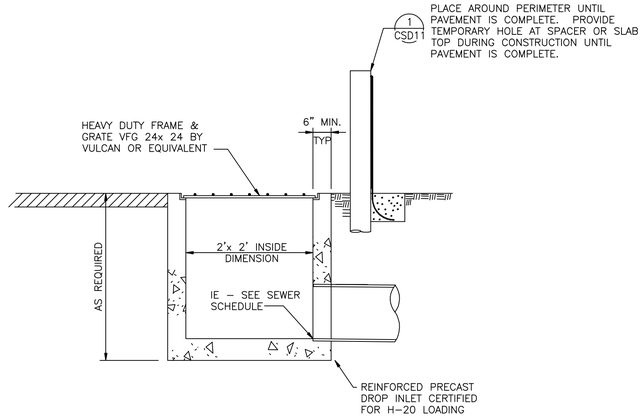

NOTES:

1. GROUT ANNULAR SPACE BETWEEN WALL AND PIPE WITH NON-SHRINK MORTAR TO INSURE ZERO LEAKAGE.
2. SUBSTITUTION FOR ABOVE WITH LOCALLY PRODUCED DROP INLET CERTIFIED H-20 LOADING WITH HEAVY DUTY FRAME & GRATE TO BE SUBMITTED FOR CONSIDERATION PRIOR TO USE.
3. USE OF LIGHT DUTY COVERS ACCEPTABLE IN NON TRAFFIC AREAS.

PRECAST CONCRETE DROP INLET
DETAIL 5 CGP-04
N.T.S. CSD-11

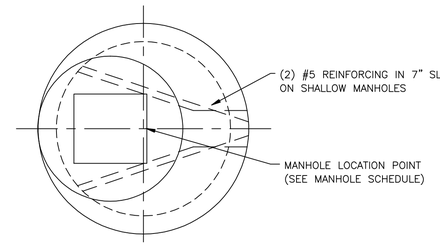

FLAT SLAB (PLAN)

DETAIL 6 CSD-11
N.T.S.

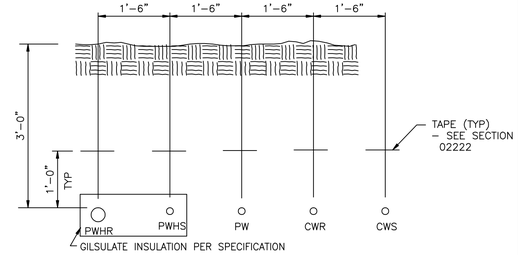

SECTION 8 CUP-08
N.T.S. CSD-11

REFER TO DETAIL 2 FOR BEDDING OF PIPE

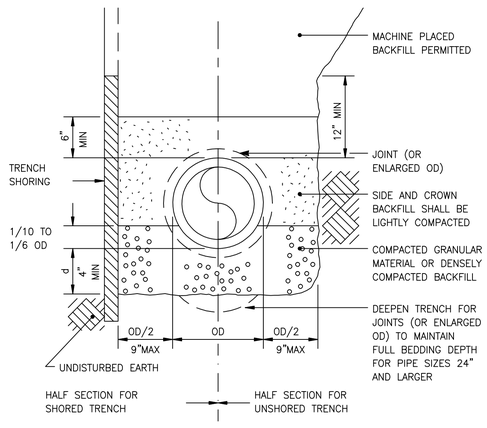

BEDDING DEPTH (d)

DIAMETER	d MIN
UP TO 60"	4"
66" & LARGER	6"

CLASS "C" PIPE BEDDING
DETAIL 2 CGP-04, CUP-08
N.T.S. CSD-11

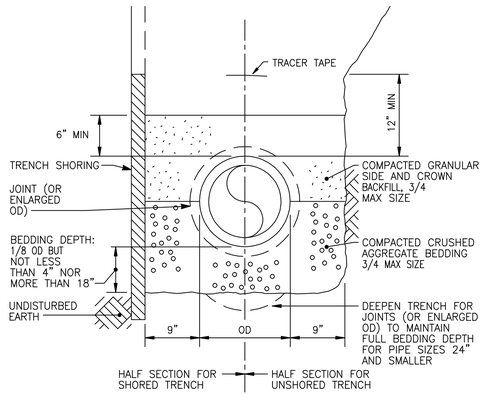

CLASS "B" BEDDING
DETAIL 4 CGP-04, CUP-08
NTS CSD-11

TO BE USED FOR PLASTIC PIPE ONLY.

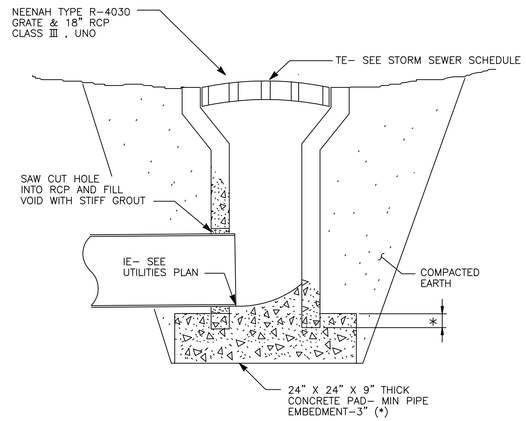

YARD INLET
DETAIL 7 CGP-04
N.T.S. CSD-11

FOR USE FOR 1 OR 2 12"ø IN 180° OR 10"ø IN 90° ARRANGEMENT (MAX)

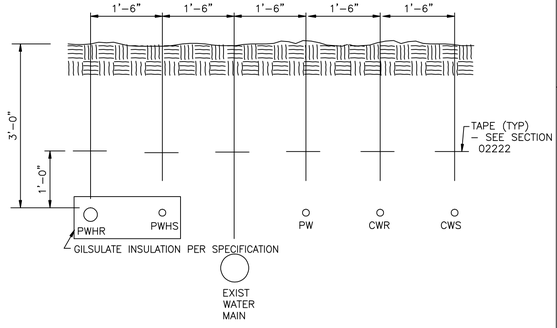

SECTION 9 CUP-08
N.T.S. CSD-11

1. REFER TO DETAIL 2 FOR BEDDING OF PIPE
2. LOCATE / CONFIRM LOCATION OF WATER MAIN & LOCATE OTHER LINES RELATED TO IT.

J.A. JONES CONSTRUCTION SERVICES
J.A. JONES ENVIRONMENTAL SERVICES
LOCKWOOD GREENE
Consulting-Design-Construction

DSGN	M WILLIAMS	DR	M WILLIAMS	CHK	E UCEDA
SUPV	P SMITH	DFTR	VAUGHN IMMZONER		

SUBMITTED BY (FIRM MEMBER-TITLE) Barry Smith, V.P. DATE
TECHNICAL BRANCH
FPE

DRAWING REVISIONS

Rev.	Description	Prep By	Date	Approvd.
0	FINAL DESIGN SUBMITTAL	JMW	3MAY99	BF/JS
1	ISSUE FOR RECORD	EG	1-JUN01	RB/RB

BEAUFORT, S.C.
MCAS
BACHELOR ENLISTED QUARTERS - PHASE IV
CIVIL
SECTIONS & DETAILS
DATE
APPROVED

Naval Facilities Engineering Command
Southern Division
Charleston, South Carolina

ETD FOR COMMANDER, NAVFAC

RECORD DRAWING DATE 20 NOV 98
CODE I.D. NO. 80091
DRAWING SIZE: D
SPEC. NO.06-98-0690
CONSTRN. CONTR. NO. N62467-98-D-0690
NAVFAC DRAWING NO. 5364364
SHEET 11 OF 19
CSD-11

LCE-AT 01/24/01 20:06:37 00672910\ P:\35\CSD00011.dwg 05035056 Scale:1=2.0

$$$$ USERNAME $$$$ $$$$ DATE&TIME $$$$ $$$$ DESIGN FILE NAME $$$$

Ds1 TEMPORARY SEEDING
SPECIFICATIONS – LBS/ACRE

CONDITION 1 – FLAT TO MODERATE SLOPES 0% – 3%

GRASS	SPRING	SUMMER	FALL	WINTER
RYE GRASS	–	–	30	40
RYE GRAIN	–	–	60	56
WHEAT	–	–	50	60
WEEPING LOVEGRASS	2	–	–	–
BROWNTOP MILLET	20	20	–	–
FESCUE	–	–	10	–

CONDITION 2 – MODERATE TO STEEP SLOPE 3% – 25%

GRASS	SPRING	SUMMER	FALL	WINTER
RYE GRASS	–	–	20	20
RYE GRAIN	–	–	60	60
WHEAT	–	–	56	56
LESPEDEZA ANNUAL	–	–	–	10
WEEPING LOVEGRASS	4	–	–	–
BROWNTOP MILLET	10	20	–	–
SUDANGRASS	20	–	–	–
FESCUE	–	–	20	–

CONDITION 3 – CONCENTRATED WATER AREAS

GRASS	SPRING	SUMMER	FALL	WINTER
RYE GRASS	–	–	10	10
RYE GRAIN	–	–	112	112
WHEAT	–	–	120	120
LESPEDEZA ANNUAL	4	–	–	–
BROWNTOP MILLET	20	20	–	–
SUDANGRASS	30	10	–	–
PEARL MILLET	–	20	–	–
FESCUE	–	–	30	–

TEMPORARY SEEDING SCHEDULE

NOTES:
1. USE CONDITION 1 RATES # PER ACRE EXCEPT WHERE SUPERSEDED BY MIXTURE & RATES SUGGESTED BY LOCAL COUNTY EXTENSION AGENT.
2. PERMANENT LANDSCAPING TO BE INSTALLED (SOD, TREES ETC) LATER IN PROJECT.
3. SUPPLEMENT SEED WITH CLEAN WHEAT STRAW @ 1 TO 2 TONS PER ACRE.

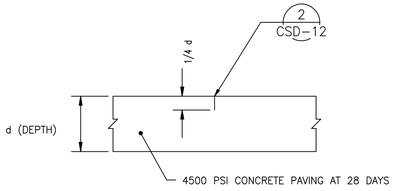

SEE SECTION 03300 FOR TIME LIMITATION OF SAWING

CONTRACTION JOINT DETAIL 1 CSP–06
NTS CSD–12

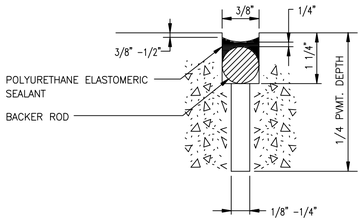

SILICONE JOINT SEALANT DETAIL 2
NTS CSD–12

	STRUCTURE TYPE*	COORDINATES		ELEVATIONS					COMMENT
		NORTH	EAST	TOP EXIST.	TOP NEW	IE OUT	IE 1	IE 2	
1	S	9751.84	5350.28		15.20	11.25	12.14		
2	S	9751.84	5236.00		16.5	13.35			
3	S	9864.00	5236.00		17.0	14.12	14.12	14.62	
4	Y	10011.00	5236.00		17.3	14.35			
5	Y	9864.00	5133.00		17.0	15.26			
6	B	9884.00	5133.00		N/A	15.3			
7	B	9897.00	5146.00		N/A	15.34			
8	W	9864.00	5158.00		N/A	15.18			
9	E	9964.82	5351.06	16.59		14.42	14.42	14.92	
10	Y	9964.82	5304.00		17.0	15.1			
11	S	10091.00	5351.06		17.8	15.3			
12	W	10091.00	5303.32		N/A	15.52			
13	W	10091.00	5286.39		N/A	15.6			
14	W	10091.00	5255.63		N/A	15.75			
15	S	10091.00	5235.00		17.5	15.87	16.87	17.37	
16	S	10091.00	5168.00		18.0	16.1			
17	E	9853.67	5350.05	15.92		12.82	12.82	13.32	
18	Y	9853.67	5303.70		17.0	13.42			
19	S	10155.00	5235.00		18.5	16.67			
20	Y	10223.00	5168.00		18.9	16.49			
21	Y	10223.00	5094.00		18.8	16.86			
22	E	9655.32	5351.00	N/A		9.77	9.77	11.23	
23	S	9652.50	5238.69		16.5	12.88			
24	S	9652.20	5161.00		16.5	13.63	13.63	14.13	
25	S	9652.50	5093.00		17.0	14.12			
26	Y	9852.00	5093.00		17.0	15.12			
27	Y	9864.00	5093.00		17.2	15.17			
28	B	9888.00	5093.00		N/A	15.26			
29	B	9897.00	5083.00		N/A	15.3			
30	B	9897.00	5083.00		N/A	15.52			
31	B	9998.00	5094.00		N/A	15.56			
32	Y	10025.00	5094.00		18.6	15.67			
33	Y	9852.00	5158.00		17.0	15.72			

* S = SQUARE PRECAST 24"x24" INSIDE DROP INLET (SEE DETAIL 5, CSD–11)
Y = YARD DRAIN (SEE DETAIL 7, CSD–11)
B = BEND – 45°
W = WYE
E = EXISTING

STORM SEWER STRUCTURE SCHEDULE

	STRUCTURE TYPE*	COORDINATES		ELEVATIONS					COMMENT
		NORTH	EAST	TOP EXIST.	TOP NEW	IE OUT	IE 1	IE 2	
S1	MH	9940.33	5234.17	–	18.00	13.47	15.00		S1–S2 0.4%
S2	MH	9866.71	5234.17		17.70	13.17	13.17		S2 –S3 0.4%
S3	MH	9866.72	5148.17		17.70	12.82	12.82	N12.82	S3–S7 0.4%
S4	MH	10022	5127.53		18.50	14.37	15.00		S4–S5 0.4%
S5	MH	10022	5148.16		18.50	14.29	14.29		S5–S3 1.02%
S6	MH	9890.3	5094		18.40	13.98	15.00		S6–S8 0.4%
S7	MH	9854	5127.53		17.45	12.72	12.90		S7–S8 0.4%
S8	E–MH	9846.26	5080.80	18.14	–	10.94	W12.53	N13.80	CORE OR SAW CUT EXIST MH, GROUT IN HOLES.

MH = MANHOLE
E–MH = EXIST MANHOL;E

SANITARY SEWER STRUCTURE SCHEDULE

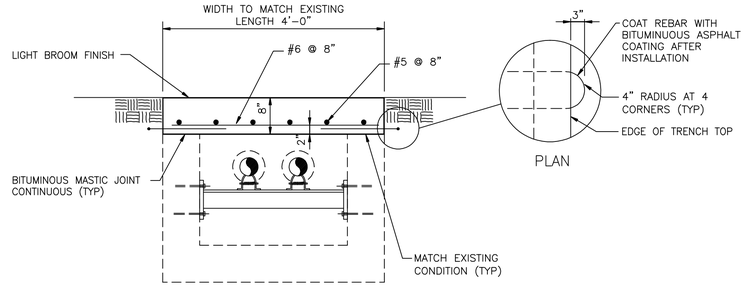

HEAVY DUTY HWR & HWS TRENCH TOP DETAIL 3 CUP–09
NTS CSD–12

J.A. JONES
J.A. JONES CONSTRUCTION COMPANY
LOCKWOOD GREENE
Consulting Division of The Jacobs Engineering Group

DSGN M WILLIAMS DR M WILLIAMS CHK E UCEDA
SUPV P SMITH CH ENGR VAUGHN WAGONER
SUBMITTED BY (FIRM MEMBER–TITLE) Joseph Strand, V.P. DATE
TECHNICAL BRANCH
FPE

DRAWING REVISIONS

Rev.	Description	Prep By	Date	Apprvd.
0	FINAL DESIGN SUBMITTAL	JMM	3MAY99	BF/JS
1	MOD'S TO SAN SEWR STR. SCHEDULE	PJS	2AUG99	BF/JS
2	ISSUE FOR RECORD	EU	1JUN01	RB/RB

BEAUFORT, S.C.
MCAS
BACHELOR ENLISTED QUARTERS – PHASE IV
CIVIL
SECTIONS & DETAILS
APPROVED
DATE
EFD FOR COMMANDER, NAVFAC

Naval Facilities Engineering Command
Southern Division
Charleston, South Carolina

RECORD DRAWING DATE 20 NOV 98
CODE I.D. NO. 80091
DRAWING SIZE: D
SPEC. NO.06–98–0690
CONSTRN. CONTR. NO. N62467–98–D–0690
NAVFAC DRAWING NO. 5364365
SHEET 12 OF 19
CSD–12

LGE–AT 01/24/01 20:06:54 00672910\ P:\35\CSD00012.dwg 05035056 Scale:1=2.0

$$$$ USERNAME $$$$ $$$$ DATE&TIME $$$$ $$$$ DESIGN FILE NAME $$$$

BORING No. 1

GROUND SURFACE ELEV. = 5.08 M

SOIL	DEPTH IN METERS	DESCRIPTION	PENETRATION BLOWS PER 150 MM
(SM W/ ROOT)*	0	MEDIUM TAN FINE SAND WITH ROOT CONTENT.	2-4-7
(SC)*	GWT 1	MEDIUM TAN FINE SAND WITH ROOT CONTENT.	3-3-8
(SM)*	2	MEDIUM TAN FINE SAND WITH SLIGHT INORGANIC CLAY CONTENT.	3-5-6
(SM)*	3	LOOSE TAN FINE SAND WITH SLIGHT INORGANIC CLAY CONTENT.	3-5-5 3-4-6
(SM)*	4 5	MEDIUM TAN FINE SAND WITH SLIGHT INORGANIC CLAY CONTENT.	6-7-8 7-10-11
(CH)*	6 7 8 9 10	VERY SOFT GRAY INORGANIC CLAY WITH SLIGHT SAND CONTENT.	1-1-1 2/450 MM 2/450 MM 1-1-1
(CH)*	11	VERY SOFT GRAY INORGANIC CLAY WITH SLIGHT SAND CONTENT.	1-1-3
(SM)*	12 13	DENSE GRAY FINE SAND.	7-20-16
(SM)*	14	VERY DENSE MEDIUM SAND.	25-35
(SM)*	15 16	DENSE GRAY FINE CEMENTED SAND WITH THE FIRST 6" GRAY FINE SAND WITH SLIGHT INORGANIC CLAY CONTENT.	2-12-30
(SM W/ SHELL)*	17 18	VERY DENSE GRAY FINE CEMENTED SAND WITH HIGH SHELL CONTENT.	65/75 MM 27-30-32

BORING No. 2

GROUND SURFACE ELEV. = 5.37 M

SOIL	DEPTH IN METERS	DESCRIPTION	PENETRATION BLOWS PER 150 MM
(CL W/ ROOT)*	0	STIFF TANNISH GRAY INORGANIC CLAY WITH SLIGHT SAND & ROOT CONTENT.	2-4-7
(SM)*	GWT 1 2	MEDIUM TAN FINE SAND WITH SLIGHT INORGANIC CLAY CONTENT.	3-3-8 3-5-7
(SM)*	3	LOOSE TAN FINE SAND WITH SLIGHT INORGANIC CLAY CONTENT.	3-5-5 2-4-4
(SM)*	4 5	MEDIUM TAN FINE SAND WITH SLIGHT INORGANIC CLAY CONTENT.	4-5-8 6-12-10
(CH)*	6	VERY SOFT GRAY INORGANIC CLAY WITH SLIGHT SAND CONTENT.	1/450 MM
(CH)*	7 8 9 10	VERY SOFT GRAY INORGANIC CLAY WITH SLIGHT SAND CONTENT.	1-2-1 2/450 MM 1-1-1
(CH)*	11	MEDIUM GRAY FINE SAND WITH SLIGHT INORGANIC CLAY CONTENT.	7-12-16
(SM)*	12 13 14	DENSE GRAY FINE TO MEDIUM SAND.	7-16-25 16-14-22
(CH/SM)*	15 16	MEDIUM GRAY INORGANIC CLAY WITH THE LAST 6" GRAY FINE SAND AND SHELL CONTENT.	1-2-3
(SM W/ SHELL)*	17 18	VERY DENSE GRAY FINE CEMENTED SAND WITH HIGH SHELL CONTENT.	63/75 MM 20-25-26

BORING No. 2 (CONT.)

SOIL	DEPTH IN METERS	DESCRIPTION	PENETRATION BLOWS PER 150 MM
(SM W/ SHELL)*	19 20 21	VERY DENSE GRAY FINE CEMENTED SAND WITH HIGH SHELL CONTENT.	17-25-28
(SM W/ SHELL)*	22 23	DENSE GRAY FINE CEMENTED SAND WITH HIGH SHELL CONTENT.	12-18-19 10-16-20

BORING No. 3

GROUND SURFACE ELEV. = 5.65 M

SOIL	DEPTH IN METERS	DESCRIPTION	PENETRATION BLOWS PER 150 MM
	0	0.15 M ASPHALTIC CONCRETE	
(SC)*	GWT 1	LOOSE TAN FINE SAND WITH HIGH INORGANIC CLAY CONTENT.	2-3-3 2-3-5
(SM)*	2 3	LOOSE TAN FINE SAND WITH SLIGHT INORGANIC CLAY CONTENT.	3-4-5 3-4-4 3-4-2
(SM)*	4 5	MEDIUM TAN FINE SAND WITH SLIGHT INORGANIC CLAY CONTENT.	3-5-8 4-7-8
(CH)*	6 7 8 9 10	VERY SOFT GRAY INORGANIC CLAY WITH SLIGHT SAND CONTENT.	2/450 MM 1/450 MM 1-1-1 1-1-1
(CH)*	11	DENSE GRAY FINE SAND.	2-12-26
(SM)*	12 13	MEDIUM GRAY FINE SAND.	12-17-13
(SM)*	14	LOOSE GRAY FINE SAND WITH SLIGHT WOOD CONTENT.	2-2-5
(SM)*	15 16	MEDIUM GRAY FINE SAND WITH SLIGHT SHELL AND INORGANIC CLAY CONTENT.	4-8-12
(SM W/ SHELL)*	17	VERY DENSE GRAY FINE CEMENTED SAND WITH SLIGHT SHELL CONTENT.	8-15-40/100 MM

BORING No. 4

GROUND SURFACE ELEV. = 5.66 M

SOIL	DEPTH IN METERS	DESCRIPTION	PENETRATION BLOWS PER 150 MM
	0	0.15 M ASPHALTIC CONCRETE	
(SM)*	GWT 1	VERY LOOSE TAN FINE SAND WITH SLIGHT INORGANIC CLAY CONTENT.	1-2-2 2-1-3
(SM)*	2	LOOSE TAN FINE SAND WITH SLIGHT INORGANIC CLAY CONTENT.	2-2-3
(SM)*	3	VERY LOOSE TAN FINE SAND WITH SLIGHT INORGANIC CLAY CONTENT.	1-2-1 2-1-1
(SM)*	4 5	MEDIUM TAN FINE SAND.	3-5-6 4-8-7
(CH)*	6 7 8 9 10	VERY SOFT GRAY INORGANIC CLAY WITH SLIGHT SAND CONTENT.	1/450 MM 2/450 MM 2/450 MM 1-1-1
(CH)*	11	SOFT GRAY INORGANIC CLAY WITH SLIGHT MARSH GRASS & SAND CONTENT.	1-1-2
(SM)*	12 13	MEDIUM GRAY FINE SAND.	15-12-17
(SM)*	14	DENSE GRAY FINE SAND.	15-17-17
(SC)*	15 16	LOOSE GRAY FINE SAND WITH SLIGHT SHELL & HIGH INORGANIC CLAY CONTENT.	2-2-4
(SM W/ SHELL)*	17	VERY DENSE GRAY FINE CEMENTED SAND WITH SLIGHT SHELL CONTENT.	65/75 MM

NOTE:
GROUND WATER ELEVATION TAKEN 24 HOURS AFTER BORING. GWT

NOTE: ALL SOIL BORING INFORMATION WAS PROVIDED BY SOIL CONSULTANTS, INC.
P.O. BOX 698
CHARLESTON, S.C. 29402
803-723-3647
PROJECT No. 9898

* VISUAL UNIFIED SOIL CLASSIFICATION

J.A. JONES OF THE CAROLINAS
LOCKWOOD GREENE Consulting Engineers

	DSGN	M WILLIAMS	DR	M WILLIAMS	CHK	E UCEDA
	SUPV	P SMITH			CH ENGR	VAUGHN WAGONER
	SUBMITTED BY (FIRM MEMBER-TITLE)					DATE
	TECHNICAL BRANCH					
						FPE

DRAWING REVISIONS

Rev.	Description	Prep By	Date	Apprvd.
0	FINAL DESIGN SUBMITTAL	JMM	3MAY99	BF/JS
1	ISSUE FOR RECORD	EU	1JUN01	RB/RB

BEAUFORT, S.C.
MCAS
BACHELOR ENLISTED QUARTERS - PHASE IV
CIVIL
SOIL BORINGS
APPROVED DATE

Naval Facilities Engineering Command
Southern Division
Charleston, South Carolina

RECORD DRAWING DATE	30 MAR 99
CODE I.D. NO.	80091
DRAWING SIZE:	D
SPEC. NO.	06-98-0690
CONSTRN. CONTR. NO.	N62467-98-D-0690
NAVFAC DRAWING NO.	5364366
SHEET	13 OF 19
	CSB-13

EFD FOR COMMANDER, NAVFAC

LOE-AT 01/24/01 20:04:20 00672910\ P:\35\CSB00013.dwg 05035056 Scale:1=2.0

$$$$ USERNAME $$$$ $$$$ DATE&TIME $$$$ $$$$ DESIGN FILE NAME $$$$

BORING No. 5

GROUND SURFACE ELEV. = 5.67 M

SOIL	DEPTH IN METERS	DESCRIPTION	PENETRATION BLOWS PER 150 MM
(SM W/ ROOT)*	GWT	LOOSE BROWN FINE SAND WITH ROOT CONTENT.	2-5-5
(SM)*	1 – 3	LOOSE TAN FINE SAND WITH SLIGHT INORGANIC CLAY CONTENT.	3-3-4 2-3-4 3-4-5 4-4-6
(SM)*	4 – 5	MEDIUM TAN FINE SAND WITH SLIGHT INORGANIC CLAY CONTENT.	3-5-6 2-7-10
(CH)*	6 – 10	VERY SOFT GRAY INORGANIC CLAY WITH SLIGHT SAND CONTENT.	2/450 MM 2/450 MM 1/450 MM 2/450 MM
(CH)*	11 – 12	SOFT TANNISH GRAY INORGANIC CLAY WITH SLIGHT MARSH GRASS CONTENT.	1-1-2
(SM)*	13 – 14	VERY DENSE GRAY FINE TO MEDIUM SAND.	20-27-24 38-41
(SM W/ SHELL)*	15 – 16	MEDIUM GRAY FINE SAND WITH SLIGHT SHELL AND AND THE LAST 2" CEMENTED NODULES.	1-1-12
(SM W/ SHELL)*	17 – 18	VERY DENSE GRAY FINE CEMENTED SAND WITH HIGH SHELL CONTENT.	64/50 MM 25-30-30

BORING No. 6

GROUND SURFACE ELEV. = 5.61 M

SOIL	DEPTH IN METERS	DESCRIPTION	PENETRATION BLOWS PER 150 MM
(SM W/ ROOT)*	GWT	LOOSE TAN FINE SAND WITH ROOT CONTENT.	2-3-4
(SM)*	1 – 3	LOOSE TAN FINE SAND WITH SLIGHT INORGANIC CLAY CONTENT.	3-5-5 5-4-6 3-3-5
(SM)*	3 – 4	LOOSE TAN FINE SAND WITH SLIGHT INORGANIC CLAY CONTENT.	5-1-2
(SM)*	4 – 5	MEDIUM TAN FINE SAND.	6-7-9 6-10-15
(CH)*	6 – 10	VERY SOFT GRAY INORGANIC CLAY WITH SLIGHT SAND CONTENT.	2/450 MM 2/450 MM 1/450 MM 2/450 MM
(CH)*	11 – 12	MEDIUM GRAY INORGANIC CLAY WITH SLIGHT SAND CONTENT.	9-4-2
(SM)*	13 – 14	VERY DENSE GRAY FINE SAND.	37-38
(SM)*	14 – 15	DENSE GRAY FINE SAND.	14-22-20
(SM W/ SHELL)*	15 – 18	VERY DENSE GRAY FINE SAND WITH HIGH SHELL AND CEMENTED NODULE CONTENT.	12-60 /100 MM 60/50 MM 15-25-27

BORING No. 7

GROUND SURFACE ELEV. = 5.80 M

SOIL	DEPTH IN METERS	DESCRIPTION	PENETRATION BLOWS PER 150 MM
(SM W/ ROOT)*		LOOSE BROWN FINE SAND WITH ROOT CONTENT.	2-3-4
(SC)*	GWT 1 – 2	LOOSE TAN FINE SAND WITH MEDIUM INORGANIC CLAY CONTENT.	2-3-3
(SM)*	2 – 3	LOOSE TAN FINE SAND WITH SLIGHT INORGANIC CLAY CONTENT.	3-2-3
(SM)*	3 – 5	MEDIUM TAN FINE SAND WITH SLIGHT INORGANIC CLAY CONTENT.	3-5-6 5-6-7 6-8-10
(SM)*	5 – 6	DENSE TAN FINE SAND.	10-20-17
(CH)*	6 – 10	VERY SOFT GRAY INORGANIC CLAY WITH SLIGHT SAND CONTENT.	2-1-1 1-1-1 2/450 MM 1-1-1
(SM)*	11 – 12	MEDIUM GRAY FINE SAND WITH SLIGHT INORGANIC CLAY CONTENT.	7-8-16
(SM)*	12 – 15	VERY DENSE GRAY FINE SAND.	2-7-40 17-35-25
(SC)*	15 – 16	LOOSE GRAY FINE SAND WITH SLIGHT SHELL AND HIGH INORGANIC CLAY CONTENT.	2-2-4
(SM W/ SHELL)*	16 – 17	VERY DENSE GRAY FINE CEMENTED SAND WITH SLIGHT SHELL CONTENT.	65/75 MM

BORING No. 8

GROUND SURFACE ELEV. = 5.92 M

SOIL	DEPTH IN METERS	DESCRIPTION	PENETRATION BLOWS PER 150 MM
		0.15 M ASPHALTIC CONCRETE	
(CL)*	GWT 1 – 2	MEDIUM TAN-GRAY INORGANIC CLAY WITH HIGH SAND CONTENT.	2-3-4 3-4-4
(SC)*	2 – 3	LOOSE TAN FINE SAND WITH SLIGHT INORGANIC CLAY CONTENT.	2-4-5
(SM)*	3 – 4	LOOSE TAN FINE SAND WITH MEDIUM INORGANIC CLAY CONTENT.	2-2-3
(SM)*	4 – 5	VERY LOOSE TAN FINE SAND WITH SLIGHT INORGANIC CLAY CONTENT.	2-3-1
(SM)*	5 – 6	MEDIUM TAN FINE SAND.	3-4-8 5-7-11
(CH)*	6 – 10	VERY SOFT GRAY INORGANIC CLAY WITH SLIGHT SAND CONTENT.	1-1-1 2/450 MM 2/450 MM 1-1-1
(SM)*	11 – 12	MEDIUM GRAY FINE SAND.	2-5-9 7-5-6
(SM)*	13 – 14	DENSE GRAY FINE SAND.	8-24-23
(SM/CH)*	15 – 16	MEDIUM GRAY FINE SAND WITH SLIGHT SHELL AND THE LAST 3" GRAY INORGANIC CLAY.	5-4-9
(SM W/ SHELL)*	17	VERY DENSE GRAY FINE CEMENTED SAND WITH SLIGHT SHELL CONTENT.	42-65

BORING No. 9

GROUND SURFACE ELEV. = 5.74 M

SOIL	DEPTH IN METERS	DESCRIPTION	PENETRATION BLOWS PER 150 MM
		0.15 M ASPHALTIC CONCRETE	
(SM)*		VERY LOOSE TAN FINE SAND.	1-2-2
(SM)*	GWT 1 – 2	LOOSE TAN FINE SAND.	2-3-4
(SC)*	2 – 3	LOOSE TAN FINE SAND WITH SLIGHT INORGANIC CLAY CONTENT.	3-4-5
(SM)*	3 – 4	VERY LOOSE TAN FINE SAND WITH SLIGHT INORGANIC CLAY CONTENT.	2-2-2 2-2-1
(SM)*	4 – 5	MEDIUM TAN FINE SAND WITH SLIGHT INORGANIC CLAY CONTENT.	3-4-7 6-11-10
(CH)*	6 – 10	VERY SOFT GRAY INORGANIC CLAY WITH SLIGHT SAND CONTENT.	1-1-1 1-1-1 2/450 MM 1-1-1
(SM)*	11 – 12	MEDIUM GRAY FINE SAND.	11-13-11
(SM)*	13 – 14	DENSE GRAY FINE SAND.	7-13-18
(SM)*	14 – 15	MEDIUM GRAY FINE SAND.	10-10-7
(CH)*	15 – 16	MEDIUM GRAY INORGANIC CLAY WITH SLIGHT SAND CONTENT.	2-4-3
(SM W/ SHELL)*	17	VERY DENSE GRAY FINE CEMENTED SAND WITH SLIGHT SHELL CONTENT.	63/150 MM

NOTE:
GROUND WATER ELEVATION TAKEN 24 HOURS AFTER BORING. GWT ▽

NOTE: ALL SOIL BORING INFORMATION WAS PROVIDED BY SOIL CONSULTANTS, INC.
P.O. BOX 698
CHARLESTON, S.C. 29402
803-723-3647
PROJECT No. 9898

* VISUAL UNIFIED SOIL CLASSIFICATION

J.A. JONES ENVIRONMENTAL SERVICES
J.A. JONES OF THE CAROLINAS
LOCKWOOD GREENE Consulting•Design•Construction

DSGN	M WILLIAMS	DR	M WILLIAMS
SUPV	P SMITH	CHK	E UCEDA
SUBMITTED BY (FIRM MEMBER-TITLE)		QA/QC	VAUGHN WAGONER
		APPROVED	DATE
		TECHNICAL BRANCH	
		FPE	

DRAWING REVISIONS

Rev.	Description	Prep. By	Date	Apprvd.
0	FINAL DESIGN SUBMITTAL	JMW	3MAY99	BF/JS
1	ISSUE FOR RECORD	EU	1-JUN01	RB/RB

MCAS BEAUFORT, S.C.
BACHELOR ENLISTED QUARTERS - PHASE IV
CIVIL
SOIL BORINGS

Naval Facilities Engineering Command
Southern Division
Charleston, South Carolina

RECORD DRAWING DATE	30 MAR 99
CODE I.D. NO.	80091
DRAWING SIZE:	D
SPEC. NO.	06-98-0690
CONSTRN. CONTR. NO.	N62467-98-D-0690
NAVFAC DRAWING NO.	5364367
SHEET 14	OF 19
	CSB-14

DATE ETD FOR COMMANDER, NAVFAC

LGE-AT 01/24/01 20:04:34 006729101\ P:\JS\CSB00014.dwg 05035056 Scale:1=2.0

$$$$ USERNAME $$$$ $$$$ DATE&TIME $$$$ $$$$ DESIGN FILE NAME $$$$

BORING No. 10

GROUND SURFACE ELEV. = 5.31 M

SOIL	DEPTH IN METERS	DESCRIPTION	PENETRATION BLOWS PER 150 MM
(CL W/ ROOT)*		MEDIUM TAN FINE SAND WITH ROOT CONTENT.	6–8–14
(CL)*	1 GWT	STIFF TANNISH GRAY INORGANIC CLAY WITH HIGH SAND CONTENT.	3–5–6
(SM)*	2	VERY LOOSE TAN FINE SAND WITH SLIGHT INORGANIC CLAY CONTENT.	1–1–2
(SM)*	3	LOOSE TAN FINE SAND WITH SLIGHT INORGANIC CLAY CONTENT.	1–2–3 2–2–3
(SM)*	4	MEDIUM TAN FINE SAND WITH SLIGHT INORGANIC CLAY CONTENT.	6–8–10
(SM)*	5	DENSE TAN FINE SAND.	10–16–19
(CH)*	6	VERY SOFT GRAY INORGANIC CLAY WITH SLIGHT SAND & SHELL CONTENT.	1/450 MM
(CH)*	7	SOFT GRAY INORGANIC CLAY WITH SLIGHT SAND & SHELL CONTENT.	2–2–2
(CH)*	8 9	VERY SOFT GRAY INORGANIC CLAY WITH SLIGHT SAND CONTENT.	2/450 MM 1–1–1
(SM)*	10 11	VERY DENSE GRAY FINE SAND.	27–35
(SM)*	12 13	MEDIUM GRAY FINE SAND.	13–12–16
(SM)*	14	DENSE GRAY FINE SAND.	12–15–17
(SC W/ SHELL)*	15 16	LOOSE GRAY FINE SAND WITH HIGH INORGANIC CLAY AND SHELL CONTENT.	1–1–4
(SM W/ SHELL)*	17	VERY DENSE GRAY FINE CEMENTED SAND WITH HIGH INORGANIC CLAY AND SHELL CONTENT.	65/50 MM
(SM W/ SHELL)*	18	DENSE GRAY FINE CEMENTED SAND.	19–18–15

BORING No. 11

GROUND SURFACE ELEV. = 5.22 M

SOIL	DEPTH IN METERS	DESCRIPTION	PENETRATION BLOWS PER 150 MM
(SM W/ ROOT)*		LOOSE TAN FINE SAND WITH ROOT CONTENT.	2–3–3
(SC)*	1 GWT	MEDIUM TANNISH GRAY INORGANIC CLAY WITH HIGH SAND CONTENT.	2–3–4
(SC)*	2	LOOSE TAN FINE SAND WITH MEDIUM INORGANIC CLAY CONTENT.	3–4–4
(SM)*	3	LOOSE TAN FINE SAND.	2–3–5 3–4–5
(SM)*	4 5	MEDIUM TAN FINE SAND WITH SLIGHT INORGANIC CLAY CONTENT.	5–10–13 7–11–14
(CH)*	6 7 8 9	VERY SOFT GRAY INORGANIC CLAY WITH SLIGHT SAND CONTENT.	2/450 MM 2/450 MM 1/450 MM 2/450 MM
(CH)*	10 11	MEDIUM GRAY INORGANIC CLAY WITH SLIGHT SAND CONTENT.	2–2–4
(SM)*	12 13	LOOSE GRAY FINE SAND WITH SLIGHT INORGANIC CLAY CONTENT.	5–3–6
(SM)*	14	MEDIUM GRAY FINE SAND.	13–10–16
(CL)*	15 16	STIFF GRAY INORGANIC CLAY WITH SLIGHT SAND AND SHELL CONTENT.	2–6–6
(SM W/ SHELL)*	17 18	VERY DENSE GRAY FINE CEMENTED SAND WITH HIGH SHELL CONTENT.	65/100 MM 30–28–34

BORING No. 12

GROUND SURFACE ELEV. = 5.50 M

SOIL	DEPTH IN METERS	DESCRIPTION	PENETRATION BLOWS PER 150 MM
(CL W/ ROOT)*		LOOSE BROWN FINE SAND WITH ROOT CONTENT.	2–2–3
(CL)*	1 GWT 2	MEDIUM TANNISH GRAY INORGANIC CLAY WITH HIGH SAND CONTENT.	2–3–3 2–3–4
(SM)*	3	LOOSE TAN FINE SAND WITH SLIGHT INORGANIC CLAY CONTENT.	2–3–5 3–4–4
(SM)*	4	MEDIUM TAN FINE SAND WITH SLIGHT INORGANIC CLAY CONTENT.	6–12–17
(SM)*	5	DENSE TAN FINE SAND.	10–22–25
(CH)*	6 7 8 9	VERY SOFT GRAY INORGANIC CLAY WITH SLIGHT SAND CONTENT.	2/450 MM 1–1–1 2/450 MM 1–1–1
(SM)*	10 11	MEDIUM GRAY FINE SAND WITH SLIGHT INORGANIC CLAY CONTENT.	1–2–3
(SM)*	12 13	VERY DENSE GRAY FINE SAND.	14–26–30
(SM)*	14	MEDIUM GRAY FINE TO MEDIUM SAND.	7–7–6
(CH)*	15 16	MEDIUM GRAY INORGANIC CLAY WITH SLIGHT SAND CONTENT.	1–1–4
(SM W/ SHELL)*	17	VERY DENSE GRAY FINE CEMENTED SAND WITH HIGH SHELL CONTENT.	62/100 MM
(SM W/ SHELL)*	18	DENSE GRAY FINE CEMENTED SAND WITH HIGH SHELL CONTENT.	11–15–25

BORING No. 13

GROUND SURFACE ELEV. = 5.26 M

SOIL	DEPTH IN METERS	DESCRIPTION	PENETRATION BLOWS PER 150 MM
(SM W/ ROOT)*		MEDIUM TAN FINE SAND WITH ROOT & SLIGHT INORGANIC CLAY CONTENT.	5–6–6
(CL)*	1 GWT 2	MEDIUM TANNISH GRAY INORGANIC CLAY WITH HIGH SAND CONTENT.	2–4–4
(CH)*	2	MEDIUM TANNISH GRAY INORGANIC CLAY WITH SLIGHT SAND CONTENT.	3–3–5
(SM)*	3	LOOSE TAN FINE SAND WITH SLIGHT INORGANIC CLAY CONTENT.	2–2–4
(SM)*	4	VERY LOOSE TAN FINE SAND WITH SLIGHT INORGANIC CLAY CONTENT.	4–3–1
(SM)*	5	MEDIUM TAN FINE SAND WITH SLIGHT INORGANIC CLAY CONTENT.	7–10–19 8–12–16
(CH)*	6 7 8 9	VERY SOFT GRAY INORGANIC CLAY WITH SLIGHT SAND CONTENT.	1/450 MM 2/450 MM 2/450 MM
(CH)*	10 11	MEDIUM GRAY INORGANIC CLAY WITH SLIGHT SAND CONTENT.	3–2–3
(SM)*	12 13	VERY DENSE GRAY FINE SAND.	25–37
(SM)*	14	MEDIUM GRAY FINE SAND.	5–7–15
(SM/CH)*	15 16	STIFF GRAY INORGANIC CLAY WITH THE FIRST 6" GRAY FINE SAND AND SHELL	10–7–8
(SM W/ SHELL)*	17 18	DENSE GRAY FINE CEMENTED SAND WITH HIGH SHELL CONTENT.	60/0 MM 10–13–23

BORING No. 14

GROUND SURFACE ELEV. = 5.75 M

SOIL	DEPTH IN METERS	DESCRIPTION	PENETRATION BLOWS PER 150 MM
		0.15 M ASPHALTIC CONCRETE	
(SM)*	1 GWT 2 3	LOOSE TAN FINE SAND WITH SLIGHT INORGANIC CLAY CONTENT.	1–2–3 2–3–3 3–3–4 2–2–4 3–3–3
(SM)*	4 5	MEDIUM TAN FINE SAND.	3–5–6 4–8–14
(CH)*	6 7 8 9	VERY SOFT GRAY INORGANIC CLAY WITH SLIGHT SAND CONTENT.	1–1–1 1–1–1 2/450 MM 1–1–1
(SM)*	10 11	MEDIUM GRAY FINE SAND WITH SLIGHT INORGANIC CLAY CONTENT.	3–4–7
(SM)*	12 13 14 15	DENSE GRAY FINE SAND.	12–17–17 13–14–18
(CH)*	16	MEDIUM GRAY INORGANIC CLAY WITH SLIGHT SAND CONTENT.	2–3–3
(SM W/ SHELL)*	17	VERY DENSE GRAY FINE CEMENTED SAND WITH SLIGHT SHELL CONTENT.	65/75 MM

NOTE:
GROUND WATER ELEVATION TAKEN 24 HOURS AFTER BORING. GWT ▽

NOTE: ALL SOIL BORING INFORMATION WAS PROVIDED BY SOIL CONSULTANTS, INC.
P.O. BOX 698
CHARLESTON, S.C. 29402
803-723-3647
PROJECT No. 9898

* VISUAL UNIFIED SOIL CLASSIFICATION

JA JONES DISTINGUISHED GOVERNMENT SERVICES
JA JONES OF THE CAROLINAS
LOCKWOOD GREENE Consulting•Design•Construction

DSGN	M WILLIAMS	DR	M WILLIAMS
SUPV	P SMITH	CHK	E UCEDA
SUBMITTED BY (FIRM MEMBER–TITLE)		QA ENGR	VAUGHN IMMZONER
			DATE
		TECHNICAL BRANCH	
			FPE

DRAWING REVISIONS

Rev.	Description	Prep By	Date	Apprvd.
0	FINAL DESIGN SUBMITTAL	JMW	1MAY99	BF/JS
1	ISSUE FOR RECORD	ED	1-JUN01	RB/RB

MCAS BEAUFORT, S.C.
BACHELOR ENLISTED QUARTERS - PHASE IV
CIVIL
SOIL BORINGS

APPROVED DATE

Naval Facilities Engineering Command
Southern Division
Charleston, South Carolina

RECORD DRAWING DATE	30 MAR 99
CODE I.D. NO.	80091
DRAWING SIZE:	D
SPEC. NO.	06-98-0690
CONSTRN. CONTR. NO.	N62467-98-D-0690
NAVFAC DRAWING NO.	5364368
SHEET 15	OF 19
	CSB-15

DATE ETD FOR COMMANDER, NAVFAC

LGE-AT 01/24/01 20:04:53 D:\67291\0\CSB00015.dwg 05035056 Scale:1=2.0

$$$$ USERNAME $$$$ $$$$ DATE&TIME $$$$ $$$$ DESIGN FILE NAME $$$$

BORING No. 15

GROUND SURFACE ELEV. = 5.78 M

SOIL	DEPTH IN METERS	DESCRIPTION	PENETRATION BLOWS PER 150 MM
		0.15 M ASPHALTIC CONCRETE	
(SM)*	1 GWT	LOOSE TAN FINE SAND WITH SLIGHT INORGANIC CLAY CONTENT.	2–3–3 4–4–4
(SC)*	2	LOOSE TAN FINE SAND WITH HIGH INORGANIC CLAY CONTENT.	2–2–4
(SM)*	3	LOOSE TAN FINE SAND WITH SLIGHT INORGANIC CLAY CONTENT.	3–3–3 4–3–2
(SM)*	4	MEDIUM TAN FINE SAND WITH SLIGHT INORGANIC CLAY CONTENT.	5–7–10 10–12–17
(CH)*	5 6 7 8 9 10	VERY SOFT GRAY INORGANIC CLAY WITH SLIGHT SAND CONTENT.	2/450 MM 1/450 MM 2/450 MM 1–1–1
(CH)*	11	MEDIUM GRAY INORGANIC CLAY WITH SLIGHT SAND CONTENT.	2–2–4
(SM)*	12 13	MEDIUM GRAY FINE SAND.	7–7–4
(SM)*	14 15	DENSE GRAY FINE SAND.	9–17–14
(CH)*	16	MEDIUM GRAY INORGANIC CLAY WITH SLIGHT SAND CONTENT.	1–3–4
(SM)*	17 18	LOOSE GRAY FINE SAND.	1–2–5
(SM W/ SHELL)*		MEDIUM GRAY FINE CEMENTED SAND WITH SLIGHT SHELL CONTENT.	3–3–9

BORING No. 15 (CONT.)

SOIL	DEPTH IN METERS	DESCRIPTION	PENETRATION BLOWS PER 150 MM
	19		
(SM W/ SHELL)*	20 21	DENSE GRAY FINE CEMENTED SAND WITH SLIGHT SHELL CONTENT.	9–15–17
(SM W/ SHELL)*	22 23	MEDIUM GRAY FINE CEMENTED SAND WITH SLIGHT SHELL CONTENT.	9–10–10 7–12–15

BORING No. 16

GROUND SURFACE ELEV. = 5.45 M

SOIL	DEPTH IN METERS	DESCRIPTION	PENETRATION BLOWS PER 150 MM
(SM W/ ROOT)*	GWT	MEDIUM BROWN FINE SAND WITH ROOT CONTENT.	3–4–8
(SM)*	1 2 3	LOOSE TAN FINE SAND WITH SLIGHT INORGANIC CLAY CONTENT.	3–3–3 2–3–4 3–4–4 4–3–4
(SM)*	4 5	MEDIUM TAN FINE SAND WITH SLIGHT INORGANIC CLAY CONTENT.	5–7–7 6–10–14
(CH)*	6	VERY SOFT GRAY INORGANIC CLAY WITH SLIGHT SAND CONTENT.	1–1–1
(CH)*	7	SOFT GRAY INORGANIC CLAY WITH SLIGHT SAND CONTENT.	1–2–1
(CH)*	8 9 10	VERY SOFT GRAY INORGANIC CLAY WITH SLIGHT SAND CONTENT.	2/18" 1–1–1
(CH)*	11	VERY STIFF GRAY INORGANIC CLAY WITH HIGH SAND & SHELL & MARSH GRASS CONTENT.	1–7–14
(SC)*	12 13	MEDIUM GRAY FINE SAND WITH HIGH INORGANIC CLAY CONTENT.	7–7–12
(SM)*	14	DENSE GRAY FINE SAND.	10–25–19
(SM W/ SHELL)*	15 16 17	VERY DENSE GRAY FINE CEMENTED SAND WITH HIGH SHELL CONTENT.	30–38–19 65/50 MM
(SM W/ SHELL)*	18	DENSE GRAY FINE CEMENTED SAND WITH HIGH SHELL CONTENT.	7–14–32

NOTE:
GROUND WATER ELEVATION TAKEN 24 HOURS AFTER BORING. GWT ▽

NOTE: ALL SOIL BORING INFORMATION WAS PROVIDED BY SOIL CONSULTANTS, INC.
P.O. BOX 698
CHARLESTON, S.C. 29402
803-723-3647
PROJECT No. 9898

* VISUAL UNIFIED SOIL CLASSIFICATION

J.A. JONES MANAGEMENT SERVICES, INC. — J.A. JONES CONSTRUCTION COMPANY OF THE CAROLINAS
LOCKWOOD GREENE — Consulting•Design•Construction

DSGN M WILLIAMS | DR M WILLIAMS | CHK E UCEDA
SUPV P SMITH | QA/C ENGR VAUGHN IMMONEN
SUBMITTED BY (FIRM MEMBER–TITLE) Vaughn Immonen, V.P. DATE
TECHNICAL BRANCH
FPE

DRAWING REVISIONS

Rev.	Description	Prep By	Date	Apprvd.
0	FINAL DESIGN SUBMITTAL	JMW	1MAY99	BF/JS
1	ISSUE FOR RECORD	EG	1-JUN01	RB/RB

BEAUFORT, S.C.
BACHELOR ENLISTED QUARTERS - PHASE IV
CIVIL
SOIL BORINGS

MCAS — APPROVED — DATE
ETD FOR COMMANDER, NAVFAC

Naval Facilities Engineering Command
Southern Division
Charleston, South Carolina

RECORD DRAWING DATE 30 MAR 99
CODE I.D. NO. 80091
DRAWING SIZE: D
SPEC. NO.06-98-0690
CONSTRN. CONTR. NO. N62467-98-D-0690
NAVFAC DRAWING NO. 5364369
SHEET 16 OF 19
CSB-16

LGE-AT 01/24/01 20:05:10 0067291O\ P:\35\CSB00016.dwg 05035056 Scale:1=2.0

$$$$ USERNAME $$$$ $$$$ DATE&TIME $$$$ $$$$ DESIGN FILE NAME $$$$

BORING No. 1–A

GROUND SURFACE ELEV. = ASSUMED 0.00M

SOIL	DEPTH IN METERS	DESCRIPTION	PENETRATION BLOWS PER 150 MM
(SM W/ ROOT)*	0	MEDIUM BROWN FINE SAND WITH ROOT CONTENT.	4–9–5
(CH)*	1	MEDIUM TANNISH GRAY INORGANIC CLAY WITH SLIGHT SAND CONTENT.	2–3–4
(CL)*		MEDIUM TANNISH GRAY INORGANIC CLAY WITH HIGH SAND CONTENT.	2–3–5
(SC)*	2 GWT	LOOSE TAN FINE SAND WITH MEDIUM CLAY CONTENT.	5–5–4
(CL)*	3	STIFF TANNISH GRAY INORGANIC CLAY WITH HIGH SAND CONTENT.	2–3–8
(SM)*	4	MEDIUM TANNISH GRAY FINE SAND.	8–6–8
(CH)*	5	VERY SOFT GRAY INORGANIC CLAY WITH SLIGHT SAND CONTENT.	1/18" 1/18"
(CH)*	6	SOFT GRAY INORGANIC CLAY WITH SLIGHT SAND CONTENT.	1–1–2
(CH)*	7 8	VERY SOFT BROWNISH GRAY INORGANIC CLAY WITH MEDIUM SAND CONTENT.	1/18" 1–1–1
(SM)*	9 10 11	MEDIUM GRAY FINE SAND.	3–9–20
(SM)*	12	DENSE GRAY FINE SAND.	10–16–16
(CH)*	13 14	STIFF GRAY INORGANIC CLAY WITH HIGH SAND CONTENT.	9–5–4
(CH)*	15	MEDIUM GRAY INORGANIC CLAY WITH MEDIUM SAND CONTENT.	1–2–5
(SM)*	16 17	VERY DENSE GRAY FINE SAND WITH CEMENTED NODULE CONTENT.	70/4"
(SM)*	18	MEDIUM GRAY FINE SAND WITH CEMENTED NODULE CONTENT.	12–12–17

BORING No. 1–A CONT.

SOIL	DEPTH IN METERS	DESCRIPTION	PENETRATION BLOWS PER 150 MM
(SM)*	20 21 22 23	MEDIUM GRAY FINE SAND WITH CEMENTED NODULE CONTENT.	12–12–15 12–12–14 8–11–17

BORING No. 2–A

GROUND SURFACE ELEV. = ASSUMED 0.00 M

SOIL	DEPTH IN METERS	DESCRIPTION	PENETRATION BLOWS PER 150 MM
(SM W/ ROOT)*	0	MEDIUM BROWN FINE SAND WITH ROOT CONTENT.	4–7–5
(CL)*	1	STIFF TANNISH GRAY INORGANIC CLAY WITH HIGH SAND CONTENT.	2–5–5
	2		2–5–7
(SM)*	GWT	MEDIUM TAN FINE SAND.	6–5–6
(CL)*	3	MEDIUM TAN INORGANIC CLAY WITH HIGH SAND CONTENT.	2–2–3
(SM)*	4	MEDIUM TAN FINE SAND.	8–8–12
(SM)*	5	LOOSE TAN FINE SAND.	6–4–2
(CH)*	6 7 8 9 10	VERY SOFT GRAY INORGANIC WITH SLIGHT SAND CONTENT.	1/18" 1/18" 1/18" 1–1–2
(SM)*	11 12 13 14 15	MEDIUM GRAY FINE SAND WITH SLIGHT CLAY CONTENT.	7–11–7 7–10–14 5–9–15
(CH)*	16	VERY SOFT GRAY INORGANIC CLAY WITH MEDIUM SAND CONTENT.	1–1–1
(SM)*	17	VERY DENSE GRAY FINE SAND WITH CEMENTED NODULE CONTENT.	65/3"
(SM)*	18	MEDIUM GRAY FINE SAND WITH CEMENTED NODULE CONTENT.	13–11–18

BORING No. 2–A CONT.

SOIL	DEPTH IN METERS	DESCRIPTION	PENETRATION BLOWS PER 150 MM
(SM)*	20 21 22 23	MEDIUM GRAY FINE SAND WITH CEMENTED NODULE CONTENT.	10–12–14 13–12–16 9–12–18

BORING No. 3–A

GROUND SURFACE ELEV. = ASSUMED 0.00 M

SOIL	DEPTH IN METERS	DESCRIPTION	PENETRATION BLOWS PER 150 MM
(SM W/ ROOT)*	0	MEDIUM TANNISH BROWN FINE SAND WITH ROOT CONTENT.	4–4–7
(CL)*	1	STIFF TAN INORGANIC CLAY WITH HIGH SAND CONTENT.	3–3–6
	2 GWT		3–4–6
(SM)*		LOOSE TANNISH GRAY FINE SAND WITH MEDIUM CLAY CONTENT.	4–6–4
(CL)*	3	SOFT TANNISH GRAY INORGANIC CLAY WITH HIGH SAND CONTENT.	2–2–2
(SM)*	4	MEDIUM TAN FINE SAND.	10–12–4
(CL)*	5	VERY SOFT TANNISH GRAY INORGANIC CLAY WITH HIGH SAND CONTENT.	3–1–1
(CH)*	6 7 8	VERY SOFT GRAY INORGANIC WITH SLIGHT SAND CONTENT.	1/18" 1/18" 1/18"
(SM W/ PEAT)*	9 10	VERY SOFT GRAY INORGANIC WITH SLIGHT PEAT AND SAND CONTENT.	1/18"
(SM–SP)*	11 12 13 14 15	DENSE GRAY FINE SAND.	17–19–20 13–17–23 11–16–15
(CH)*	16	SOFT GRAY INORGANIC CLAY WITH SLIGHT SAND AND SHELL CONTENT.	1–1–2
(SM)*	17	VERY DENSE GRAY FINE SAND WITH CEMENTED NODULE CONTENT.	70/3"

NOTE:
GROUND WATER ELEVATION TAKEN 24 HOURS AFTER BORING. GWT ▽

NOTE: ALL SOIL BORING INFORMATION WAS PROVIDED BY SOIL CONSULTANTS, INC.
P.O. BOX 698
CHARLESTON, S.C. 29402
803–723–3647
PROJECT No. 9898

* VISUAL UNIFIED SOIL CLASSIFICATION

J.A. JONES OF THE CAROLINAS
LOCKWOOD GREENE Consulting Engineers and Constructors

DSGN	M WILLIAMS	DR	M WILLIAMS	CHK	E UCEDA
SUPV	P SMITH	CH ENGR	VAUGHN WAGONER
SUBMITTED BY (PRIN MEMBER–TITLE)			DATE
TECHNICAL BRANCH			
			FPE

DRAWING REVISIONS

Rev.	Description	Prep By	Date	Apprvd.
0	FINAL DESIGN SUBMITTAL	JMM	3MAY99	BF/JS
1	ISSUE FOR RECORD	EU	1JUN01	RB/RB

BEAUFORT, S.C.
MCAS
BACHELOR ENLISTED QUARTERS – PHASE IV
CIVIL
SOIL BORINGS
APPROVED DATE

Naval Facilities Engineering Command
Southern Division
Charleston, South Carolina

EFD FOR COMMANDER, NAVFAC

RECORD DRAWING DATE	30 MAR 99
CODE I.D. NO.	80091
DRAWING SIZE:	D
SPEC. NO.	06–98–0690
CONSTRN. CONTR. NO.	N62467–98–D–0690
NAVFAC DRAWING NO.	5364370
SHEET 17	OF 19

CSB–17

LGE–AT 01/24/01 20:05:27 00672910\ P:\35\CSB00017.dwg 05035056 Scale:1=2.0

$$$$ USERNAME $$$$ $$$$ DATE&TIME $$$$ $$$$ DESIGN FILE NAME $$$$

BORING No. 4–A

GROUND SURFACE ELEV. = ASSUMED 0.00M

SOIL	DEPTH IN METERS	DESCRIPTION	PENETRATION BLOWS PER 150 MM
(SM W/ ROOT)*	0	MEDIUM TANNISH BROWN FINE SAND WITH ROOT CONTENT.	3–7–10
(SM)*	1	MEDIUM TAN FINE SAND WITH SLIGHT CLAY CONTENT.	6–9–9
	2 GWT		6–6–10
(CL)*		MEDIUM TAN INORGANIC CLAY WITH HIGH SAND CONTENT.	4–3–2
(SM)*	3	MEDIUM TAN FINE SAND WITH MEDIUM CLAY CONTENT.	2–10–12
	4		7–7–6
(CH)*	5	VERY SOFT GRAY INORGANIC CLAY WITH SLIGHT SAND CONTENT.	1/18"
	6		1/18"
	7		1/18"
	8		1/18"
(SM W/ PEAT)*	9	VERY SOFT GRAY INORGANIC WITH SLIGHT PEAT AND SAND CONTENT.	2/18"
	10		
(SM)*	11	MEDIUM GRAY FINE SAND WITH SLIGHT CLAY CONTENT.	1–1–11
(SM)*	12	LOOSE BROWNISH GRAY FINE SAND WITH MEDUIM CLAY CONTENT.	2–2–7
(SM)*	13	MEDIUM BROWNISH GRAY FINE SAND MEDIUM CLAY CONTENT.	4–15–10
	14		
(SM)*	15	VERY SOFT GRAY INORGANIC CLAY WITH SLIGHT SHELL AND MEDIUM SAND CONTENT.	2/18"
	16		
(SM)*	17	VERY DENSE GRAY FINE SAND WITH CEMENTED NODULE CONTENT.	40–45/3"
	18		
(SM)*		DENSE GRAY FINE SAND WITH CEMENTED NODULE CONTENT.	14–15–17

BORING No. 4–A CONT.

SOIL	DEPTH IN METERS	DESCRIPTION	PENETRATION BLOWS PER 150 MM
(SM)*	20	DENSE GRAY FINE SAND WITH CEMENTED NODULE CONTENT.	15–19–16
	21		
(SM)*	22	MEDIUM GRAY FINE SAND WITH CEMENTED NODULE CONTENT.	14–15–13
	23		11–10–17
	24		
	25		5–8–12
	26		7–9–14

BORING No. 5–A

GROUND SURFACE ELEV. = ASSUMED 0.00M

SOIL	DEPTH IN METERS	DESCRIPTION	PENETRATION BLOWS PER 150 MM
(SM W/ ROOT)*	0	MEDIUM BROWN FINE SAND WITH ROOT CONTENT.	3–4–9
(CH)*	1	MEDIUM TANNISH BROWN FINE SAND SLIGHT CLAY CONTENT.	4–6–6
(CL)*		LOOSE TANNISH BROWN FINE SAND WITH MEDIUM CLAY CONTENT.	3–4–4
	2 GWT		
(SM)*		LOOSE TAN FINE SAND WITH MEDIUM CLAY CONTENT.	5–5–4
(CL)*	3	MEDIUM TAN INORGANIC CLAY WITH HIGH SAND CONTENT.	1–3–4
(SM)*	4	MEDIUM TAN FINE SAND WITH SLIGHT INORGANIC CLAY CONTENT.	4–9–9
(SM)*	5	LOOSE TANNISH GRAY FINE SAND WITH SLIGHT INORGANIC CLAY CONTENT.	3–3–2
(CH)*	6	VERY SOFT GRAY INORGANIC CLAY WITH SLIGHT SAND CONTENT.	1/18"
	7		1/18"
	8		1/18"
	9		1/18"
(SC W/ WOOD)*	10	LOOSE GRAY FINE SAND WITH MEDIUM CLAY AND WOOD CONTENT.	6–3–6
(CL)*	11	VERY STIFF BROWN INORGANIC CLAY WITH HIGH SAND CONTENT.	7–4–15
(CH)*	12	DENSE GRAY FINE SAND.	16–21–20
(CH)*	13	SOFT GRAY INORGANIC CLAY WITH SLIGHT SAND AND SHELL CONTENT.	1–1–3
	14		
	15		
	16		
	17		65–55/3"
(SM)*	18	VERY DENSE GRAY FINE SAND WITH CEMENTED NODULE CONTENT.	13–13–14

BORING No. 5–A CONT.

SOIL	DEPTH IN METERS	DESCRIPTION	PENETRATION BLOWS PER 150 MM
	20		18–18–13
	21		
	22		15–16–11
(SM)*	23	VERY DENSE GRAY FINE SAND WITH CEMENTED NODULE CONTENT.	10–15–14
	24		
	25		5–8–12
	26		8–10–13

NOTE:
GROUND WATER ELEVATION TAKEN 24 HOURS AFTER BORING. GWT ▽

NOTE: ALL SOIL BORING INFORMATION WAS PROVIDED BY SOIL CONSULTANTS, INC.
P.O. BOX 698
CHARLESTON, S.C. 29402
803–723–3647
PROJECT No. 9898

* VISUAL UNIFIED SOIL CLASSIFICATION

J.A. JONES MANAGEMENT SERVICES, INC.
J.A. JONES OF THE CAROLINAS
LOCKWOOD GREENE Consulting•Design•Construction

DSGN M. WILLIAMS DR M. WILLIAMS CHK E. UCEDA
SUPV P. SMITH DFT ENGR VAUGHN IMMZONER
SUBMITTED BY (FIRM MEMBER–TITLE) Gary Small, V.P. DATE
TECHNICAL BRANCH
FPE

DRAWING REVISIONS

Rev.	Description	Prep By	Date	Apprvd.
0	FINAL DESIGN SUBMITTAL	JMW	1MAY99	BF/JS
1	ISSUE FOR RECORD	EG	1-JUN01	RB/RB

BEAUFORT, S.C.
BACHELOR ENLISTED QUARTERS – PHASE IV
CIVIL
SOIL BORINGS

MCAS APPROVED DATE
ETD FOR COMMANDER, NAVFAC

Naval Facilities Engineering Command
Southern Division
Charleston, South Carolina

RECORD DRAWING DATE 30 MAR 99
CODE I.D. NO. 80091
DRAWING SIZE: D
SPEC. NO.06–98–0690
CONSTRN. CONTR. NO. N62467–98–D–0690
NAVFAC DRAWING NO. 5364371
SHEET 18 OF 19
CSB–18

LGE–AT 01/24/01 20:05:45 0067291O\ P:\35\CSB00018.dwg 05035056 Scale:1=2.0

$$$$ USERNAME $$$$ $$$$ DATE&TIME $$$$ $$$$ DESIGN FILE NAME $$$$

BORING No. 6-A

GROUND SURFACE ELEV. = ASSUMED 0.00M

SOIL	DEPTH IN METERS	DESCRIPTION	PENETRATION BLOWS PER 150 MM
		2" ASPHALTIC CONCRETE	
(SM)*		LOOSE BROWN FINE SAND.	2-2-4
(SM)*	1	MEDIUM BROWN FINE SAND.	4-6-5
(SC)*		MEDIUM TANNISH BROWN FINE SAND WITH HIGH INORGANIC CLAY CONTENT.	3-6-7
(SM)*	GWT 2 ▽	MEDIUM TAN FINE SILTY SAND.	6-8-10
(CL)*	3	MEDIUM TANNISH GRAY INORGANIC CLAY WITH HIGH SAND CONTENT.	3-2-4
(SM)*	4	MEDIUM TANNISH WHITE FINE SAND.	8-8-16
	5		11-12-18
	6		1/18"
			1/18"
(CH)*	7	VERY SOFT GRAY INORGANIC CLAY WITH SLIGHT SAND CONTENT.	
	8		1-1-1
	9		
	10		1/18"
(SC)*	11	MEDIUM GRAY FINE SAND WITH MEDIUM INORGANIC CLAY CONTENT.	2-4-12
(SM)*	12	VERY DENSE GRAY FINE SAND.	17-28-34
(SM)*	13	MEDIUM GRAY FINE SAND.	7-13-12
(CH)*	14	MEDUIM GRAY INORGANIC CLAY WITH MEDIUM SAND AND SLIGHT SHELL CONTENT.	1-2-3
	15		
	16		
(SM)*	17	VERY LOOSE GRAY FINE SAND WITH CEMENTED NODULE CONTENT.	22-1-1
	18		1/18"

BORING No. 6-A CONT.

SOIL	DEPTH IN METERS	DESCRIPTION	PENETRATION BLOWS PER 150 MM
(SM)*		VERY LOOSE GRAY FINE SAND WITH CEMENTED NODULE CONTENT.	
	20		12-14-24
(SM)*	21	DENSE GRAY FINE SAND WITH CEMENTED NODULE CONTENT.	6-15-18
	22		
	23		10-15-19
	24		
	25		6-8-19
(SM)*	26	VERY STIFF GREENISH GRAY FINE SAND WITH SLIGHT INORGANIC CLAY CONTENT.	7-10-14
	27		8-11-16

BORING No. 7-A

GROUND SURFACE ELEV. = ASSUMED 0.00M

SOIL	DEPTH IN METERS	DESCRIPTION	PENETRATION BLOWS PER 150 MM
		2" ASPHALTIC CONCRETE	
(SM)*		LOOSE BROWN FINE SAND.	1-2-4
(SM)*	1	LOOSE TAN FINE SAND WITH SLIGHT CLAY CONTENT.	3-4-4
(SM)*	GWT 2 ▽	STIFF TAN INORGANIC CLAY WITH HIGH SAND CONTENT.	3-4-7
			5-5-4
(CL)*	3	MEDIUM TAN INORGANIC CLAY WITH HIGH SAND CONTENT.	2-1-2
(SM)*	4	MEDIUM TANNISH WHITE FINE SAND.	8-11-13
	5		4-6-8
	6		1/18"
			1/18"
(CH)*	7	VERY SOFT GRAY INORGANIC CLAY WITH SLIGHT SAND CONTENT.	
	8		1/18"
	9		
	10		1/18"
(SM)*	11	LOOSE BROWN FINE SAND WITH SLIGHT CLAY CONTENT.	1-6-3
(CL)*	12	SOFT BROWN INORGANIC CLAY WITH HIGH SAND CONTENT.	2-1-2
(CH)*	13	DENSE GRAY IFINE SAND WITH CEMENTED NODULE AND SLIGHT SHELL CONTENT.	12-14-19
	14		
	15		14-16-18
	16		
(SM)*	17	VERY DENSE GRAY FINE SAND WITH CEMENTED NODULE CONTENT.	46-36-24
(SM)*	18	SAND WITH CEMENTED NODULE CONTENT.	7-12-16
(SM)*		DENSE GRAY FINE SAND WITH CEMENTED NODULE CONTENT.	

BORING No. 7-A CONT.

SOIL	DEPTH IN METERS	DESCRIPTION	PENETRATION BLOWS PER 150 MM
	20		13-15-20
(SM)*	21	DENSE GRAY FINE SAND WITH CEMENTED NODULE CONTENT.	8-14-19
	22		
	23		12-17-19
	24		
(SM)*		GRAY FINE SAND WITH SLIGHT INORGANIC CLAY CONTENT.	7-9-22

NOTE:
GROUND WATER ELEVATION TAKEN 24 HOURS AFTER BORING. GWT ▽

NOTE: ALL SOIL BORING INFORMATION WAS PROVIDED BY SOIL CONSULTANTS, INC.
P.O. BOX 698
CHARLESTON, S.C. 29402
803-723-3647
PROJECT No. 9898

* VISUAL UNIFIED SOIL CLASSIFICATION

J.A. JONES
J.A. JONES OF THE CAROLINAS
LOCKWOOD GREENE
Consulting Design-Construction

DSGN	M WILLIAMS	DR	M WILLIAMS
SUPV	P SMITH	CH ENGR	VAUGHN WAGONER
SUBMITTED BY (FIRM MEMBER-TITLE)			DATE
TECHNICAL BRANCH			
			FPE

DRAWING REVISIONS

Rev.	Description	Prep By	Date	Apprvd.
0	FINAL DESIGN SUBMITTAL	JMM	3MAY99	BF/JS
1	ISSUE FOR RECORD	EU	1JUN01	RB/RB

MCAS
BEAUFORT, S.C.
BACHELOR ENLISTED QUARTERS - PHASE IV
CIVIL
SOIL BORINGS
APPROVED
DATE

Naval Facilities Engineering Command
Southern Division
Charleston, South Carolina

RECORD DRAWING DATE 30 MAR 99
CODE I.D. NO. 80091
DRAWING SIZE: D
SPEC. NO.06-98-0690
CONSTRN. CONTR. NO. N62467-98-D-0690
NAVFAC DRAWING NO. 5364372
SHEET 19 OF 19
CSB-19

EFD FOR COMMANDER, NAVFAC

LGE-AT 01/24/01 20:05:59 00672910\ P:\35\CSB00019.dwg 05035056 Scale:1=2.0

$$$$ USERNAME $$$$ $$$$ DATE&TIME $$$$ $$$$ DESIGN FILE NAME $$$$

ABBREVIATIONS

Abbrev.	Meaning
ABBREV.	ABBREVIATION
ACCESS.	ACCESSORIES
ACOUST.	ACOUSTICAL
ADJ.	ADJUST/ADJUSTABLE
A.F.F.	ABOVE FINISH FLOOR
ALUM.	ALUMINUM
ARCH.	ARCHITECTURAL
A.T.	ACOUSTICAL TILE
ACT.	ACTIVE
BD.	BOARD
BLDG.	BUILDING
BLK.	BLOCK
BOT./	BOTTOM OF
B.U.	BUILT UP
CAR.	CARPET
C	CHANNEL
C.B.	CONCRETE BLOCK
C.J.	CONTROL JOINT
CLG.	CEILING
C.H.	CEILING HEIGHT
CLR.	CLEAR
CO.	COMPANY
COL.	COLUMN
CONC.	CONCRETE
CONF.	CONFERENCE
CONTR.	CONTRACTOR
CONST.	CONSTRUCTION
CONT.	CONTINUOUS
C.T.	CERAMIC TILE
℄	CENTER LINE
DET.	DETAIL
DIA.	DIAMETER
DIM.	DIMENSION
DN.	DOWN
D.O.	DOOR OPENING
DR.	DOOR
DWG.	DRAWING
EA.	EACH
E.J.:EXP. JT.	EXPANSION JOINT
EL.	ELEVATION
ELECT.	ELECTRICAL
ENGR.	ENGINEER
E.P.	EPOXY PAINT
E.W.C.	ELECTRIC WATER COOLER
EXIST.	EXISTING
EXP.	EXPANSION/EXPOSED
EXP. STR.	EXPOSED STRUCTURE
EXT.	EXTERIOR
FAC.	FACTORY
F.D.	FLOOR DRAIN
F.E.	FIRE EXTINGUISHER
F.H.C.	FIRE HOSE CABINET
FIN.	FINISH
FL.	FLOOR
FOUND.; FDN.	FOUNDATION
GA.	GAGE
GALV.	GALVANIZED
GEN.	GENERAL
GL.	GLASS
G.L.	GIRT LINE
GYP.	GYPSUM
G.B.	GYPSUM BOARD
G.B.F.	GYPSUM BOARD FURRING ON C.B.
H	HIGH
HORIZ.	HORIZONTAL
HR.	HANDRAIL
H.P.	HIGH POINT
HT.	HEIGHT
H.V.A.C.	HEATING, VENTILATING, & AIR CONDITIONING
H.M.	HOLLOW METAL
I.D.	INSIDE DIAMETER
INSUL.	INSULATION
JAN.	JANITOR
J.C.	JANITOR'S CLOSET
JT.	JOINT
LAV.	LAVATORY
LG.	LONG
LH	LEFT HAND
LHR	LEFT HAND REVERSE
L.P.	LOW POINT
LTG.	LIGHTING
LVR.	LOUVER
MAS.	MASONRY
MATL.	MATERIAL
MAX.	MAXIMUM
MECH.	MECHANICAL
MET.	METAL
MFG.	MANUFACTURING
MFR.	MANUFACTURER
MGR.	MANAGER
MIN.	MINIMUM
MISC.	MISCELLANEOUS
M.O.	MASONRY OPENING
M.W.P.	METAL WALL PANEL
NO.	NUMBER
O.C.	ON CENTER
O.D.	OUTSIDE DIAMETER
OPP.	OPPOSITE
OPNG.	OPENING
PART.	PARTITION
P.J.	PAPER JOINT
PLAS.	PLASTER
P.M.F.	PRESSED METAL FRAME
PNL.	PANEL
PR.	PAIR
PTD.	PAINTED
PL.	PLATE
PFGB	PRE-FINISHED GYP. BD.
PFGBF	PRE-FINISHED GYP. BD. FURRING
Q.T.	QUARRY TILE
R.D.	ROOF DRAIN
REF.	REFERENCE
REINF.	REINFORCING
REQ'D.	REQUIRED
REV.	REVISION/REVISED
RH	RIGHT HAND
RHR	RIGHT HAND REVERSE
RM.	ROOM
SCHED.	SCHEDULE
S.G.	SEMI-GLOSS
SECT.	SECTION
SIM.	SIMILAR
SPEC.[S]	SPECIFICATION[S]
S.S.	STAINLESS STEEL
STD.	STANDARD
STL.	STEEL
STOR.	STORAGE
STRUCT.	STRUCTURAL
SUSP.	SUSPENDED
T/	TOP OF
TEL.	TELEPHONE
THR.	THRESHOLD
TYP.	TYPICAL
TU	TOUCH-UP
U.N.	UNLESS NOTED
VCT.	VINYL COMPOSITION TILE
V.C.B.	VINYL COVE BASE
VERT.	VERTICAL
VEST.	VESTIBULE
W.	WIDE
W/	WITH
W/O	WITHOUT
W.C.	WATER CLOSET
WD.	WOOD
WDW.	WINDOW
WHSE.	WAREHOUSE
W.M.P.	WIRE MESH PARTITION
W.O.	WINDOW OPENING
W.R.G.B.	WATER RESISTANT GYPSUM BOARD
W.S.	WHEATHERSTRIPPING

SYMBOLS

- EARTH [SECTION]
- GRAVEL [SECTION]
- CONCRETE [SECTION]
- CONCRETE [PLAN/ELEVATION]
- CONCRETE BLOCK [PLAN]
- CONCRETE BLOCK [SECTION]
- INSULATED CONC. BLOCK [PLAN]
- INSULATED CONC. BLOCK [SECTION]
- CONCRETE BLOCK [ELEVATION – RUNNING BOND]
- INSULATED METAL SIDING [PLAN]
- INSULATED METAL SIDING [SECTION]
- GLASS [PLAN/SECTION]
- GLASS [ELEVATION]
- CERAMIC TILE [ELEVATION]
- WOOD BLOCKING [SECTION]
- WOOD TRIM [SECTION]
- PLYWOOD [SECTION]
- METAL STUD PARTITION [PLAN]
- ACOUSTICAL TILE [SECTION]
- RIGID INSULATION
- BATT INSULATION [SECTION]
- STEEL [SECTION]
- METAL [PLAN/ELEVATION]
- HANDICAPPED

GENERAL NOTES

I. GENERAL INFORMATION

A. PIPE SLEEVES, FRAMED OPENINGS AND ANY MISC. OPENINGS NOT SHOWN ON ARCH. DWGS. SHALL BE SIZED AND LOCATED AS INDICATED ON THE APPLICABLE H.V.A.C., MECH., STRUCT. OR ELECT. DRAWINGS.

B. FIRE HOSE RACKS, CABINETS, SPRINKLER RISERS AND EXTINGUISHERS ARE SHOWN ON THE PLUMBING AND FIRE PROTECTION DWGS.

C. SIDEWALKS, DRIVES AND OTHER YARD WORK ARE SHOWN ON THE CIVIL DWGS.

D. SEE STRUCTURAL STEEL AND CONCRETE DWGS. FOR DETAILS AND INFORMATION ON STAIRS.

E. FOR STRUCTURAL STEEL, REINFORCING BARS, CONCRETE AND OTHER STRUCTURAL MATERIALS, SEE STRUCTURAL DWGS. AND SPECIFICATIONS.

F. ALL SHADED WALLS ON REFLECTED CLG. PLANS DENOTE WALLS EXTENDING TO FLOOR OR ROOF STRUCTURE ABOVE. SEE APPLICABLE DETAILS AND WALL SECTIONS FOR ANCHORING WALLS TO FLOOR OR ROOF STRUCTURE.

G. REFER TO DRAWING CSP-06 FOR BLDG. COORDINATE LOCATIONS. AND SEE CIVIL DRAWINGS FOR MEAN SEA LEVEL ELEVATIONS FOR ALL FLOOR LEVELS.

II. MASONRY WORK

A. ALL MASONRY WALLS SHALL BE FULL HEIGHT TO UNDERSIDE OF FLOOR SLAB OR ROOF DECK, EXCEPT WHERE NOTED OTHERWISE – SEE REFLECTED CEILING PLANS. FULL HEIGHT WALLS SHALL BE SEALED TO FLOOR SLAB OR ROOF DECK ABOVE – SEE APPLICABLE DETAILS.

B. THE MASONRY CONTRACTOR SHALL BE RESPONSIBLE FOR THE FILLING OF CONCRETE BLOCK CELLS OR VOIDS WITH GROUT OR CONCRETE AS REQUIRED FOR THE INSTALLATION OF SPECIAL ITEMS AS DETAILED ON THE DWGS. OR NOTED IN THE SPECIFICATIONS [I.E. BOND BMS. ,WALL OPNGS., FRAMES, TOILET ACCESSORIES, DOOR MECHANISM SUPPORT, PILASTERS, ETC.]

C. CONTROL JOINTS SHALL BE LOCATED AS INDICATED ON THE FLOOR PLANS. IF NOT SHOWN, CONTROL JOINTS SHALL BE CONSTRUCTED AT INTERVALS NOT EXCEEDING 40 FEET OR THREE TIMES THE WALL-HEIGHT WHICHEVER IS LESS.

D. ALL MASONRY WALLS SHALL BE LAID IN RUNNING BOND, EXCEPT AS NOTED OTHERWISE.

E. ALL MASONRY WALLS SHALL HAVE HORIZONTAL WALL REINFORCING AT 16" O.C. VERTICAL, EXCEPT WHERE NOTED OTHERWISE.

F. WHERE BOND BEAMS LOCATED AT DIFFERENT ELEVATIONS INTERSECT OR WHERE BOND BEAMS ARE INTERRUPTED BY WALL OPENINGS, BOND BEAMS AND WALL OPENING LINTELS SHALL BE LAPPED A MINIMUM OF 2'-0" AND TIED TOGETHER WITH 4#5 BARS. WHERE THE ELEVATION DIFFERENCE BETWEEN BOND BEAMS EXCEEDS 8" BOND BEAMS SHALL BE TIED TOGETHER WITH 4#5 BARS VERTICAL. FILL BLOCK CELLS SOLID WITH GROUT AROUND REINFORCING.

G. MASONRY WALLS PLACED ON FIRST FLOOR AND FOOTING SHALL HAVE THE REGULAR 8" HIGH BLOCK STARTER COURSES, UNLESS OTHERWISE NOTED, AND WALLS SHALL BE COURSED VERTICALLY IN 8" INCREMENTS THROUGHOUT.

H. ALL BOND BEAMS AND REINF. SHALL BE DISCONTINUOUS AT CONTROL JOINTS AND EXP. JOINTS IN MASONRY WALLS. BOND BEAM REINF. SHALL BE EXTENDED INTO EACH SIDE OF JOINT INSIDE A STEEL SLEEVE. DO NOT FILL CONTROL JOINT OR EXPANSION JOINT AT BOND BEAM WITH GROUT.

I. IT IS THE CONTRACTOR'S RESPONSIBILITY TO COORDINATE BETWEEN ARCH. AND STRUCT. DWGS. FOR SPECIAL MASONRY REQUIREMENTS AND FOR INFORMATION GIVEN ON ANY OF THESE DRAWINGS CONCERNING THE MASONRY WORK.

J. IT IS THE RESPONSIBILITY OF THE CONTRACTOR TO COORDINATE WALL OPENINGS, STRUCTURAL FRAMING, PIPES, ETC., WITH CONTROL JOINTS IN MASONRY WALLS, LOCATED BY DIMENSIONS ON THE FLOOR PLANS. WALL CONSTRUCTION AND OTHER ITEMS OF WORK SHOULD BE ACCURATELY COORDINATED PRIOR TO ERECTION OF WALL AT CONTROL JOINTS TO ELIMINATE CONFLICTS. CONTROL JOINT LOCATION SHALL BE SLIGHTLY ADJUSTED AS REQ'D. TO AVOID SUCH CONFLICTS WHILE MAINTAINING THE MAXIMUM SPACING AS NOTED ABOVE.

L. ALL MASONRY WALLS ADJACENT TO COLUMNS SHALL BE ANCHORED WITH WIRE ANCHORS TO COLUMNS AT 24" O.C. VERTICAL. UNLESS OTHERWISE NOTED.

M. A MINIMUM OF TWO [2] CONTINUOUS BOND BEAMS REINFORCED W/ 2#5 BARS SHALL BE BUILT INTO ALL MASONRY WALLS EXTENDING FULL HEIGHT AS DEFINED IN NOTE "A", EXCEPT FOR WALLS 12'-0" OR LESS IN HEIGHT OR AS OTHERWISE SPECIFIED. LOCATE BOND BEAMS AT WALL MID-HEIGHT AND AT TOP OF WALL TO FACILITATE ANCHORAGE. WALLS 12'-0" OR LESS IN HEIGHT REQUIRE MIN. ONE [1] CONT. BOND BEAM LOCATED AS DETAILED OR AT TOP OF WALL FOR ANCHORAGE.

N. ALL STRUCTURAL FRAMING MEMBERS PENETRATING MASONRY WALLS TO BE SEALED AS FOLLOWS:

1. ALLOW 1" CLEARANCE CONTINUOUS AROUND FRAMING MEMBERS TO ADJACENT MASONRY WALL CONSTRUCTION.
2. JOINT TO BE SEALED WITH BACKER ROD AND CAULKED CONTINUOUS ON BOTH SIDES OF WALL AROUND ENTIRE FRAMING MEMBERS.
3. STRUCTURAL FRAMING MEMBERS PENETRATING FIRE RATED PARTITIONS SHALL HAVE ONE INCH SPACING AROUND MEMBER PACKED WITH FIRE-STOP MATERIAL SPECIFIED PRIOR TO INSTALLATION OF CAULK. APPLY SPRAY FIREPROOFING TO STEEL MEMBERS – MIN. 4'-0" EACH SIDE OF WALL.

O. IT IS THE RESPONSIBILITY OF THE CONTRACTOR TO COORDINATE WITH MECHANICAL, ELECTRICAL AND STRUCTURAL DRAWINGS FOR SIZE, LOCATION AND TYPE OF OPENINGS NOT SHOWN ON ARCHITECTURAL DRAWINGS. REFERENCE TO ARCHITECTURAL DETAILS FOR CONSTRUCTION.

P. UNLESS OTHERWISE SHOWN ALL BOND BEAMS AND LINTEL BLOCKS SHALL BE REINFORCED WITH 2#5 BARS CONT.

Q. ALL REINFORCING BAR SPLICES SHALL BE LAPPED 48 BAR DIAMETERS, EXCEPT WHERE NOTED OTHERWISE.

R. MASONRY IS DESIGNED FOR THE FOLLOWING VALUES:

1. MASONRY COMPRESSIVE STRENGTH AT 28 DAYS: F'M=1500 PSI
2. REINFORCING BAR MINIMUM ALLOWABLE TENSILE STRENGTH: F_S =24,000 PSI

S. SEE SPECIFICATIONS FOR TESTING REQUIREMENTS.

III. FINISHES:

A. GYP. BD. FRAMING AROUND COLUMNS, ETC., SHALL BE COORDINATED WITH CEILING TILE LAYOUTS TO AVOID EXCESSIVE CUTTING OF CEILING TILE.

B. SEE SPECIFICATIONS FOR PAINTING SYSTEMS SCHEDULE.

D. CAUTION: SOME DOORS MAY BE PAINTED DIFFERENT COLORS ON OPPOSITE SIDES. SEE SCHEDULES FOR COLOR AND LOCATION.

E. UNLESS INDICATED OTHERWISE, WHERE DOORS ARE INDICATED TO BE PAINTED, DOOR FRAMES SHALL BE PAINTED TO MATCH.

F. WALLS INDICATED AS PAINTED, IN ROOMS RECEIVING ACOUSTICAL CEILINGS, ARE TO BE PAINTED APPROXIMATELY 4" ABOVE CEILING ELEVATION.

G. UNLESS NOTED OTHERWISE, WHERE COLUMNS ARE FURRED, GYPSUM BOARD AROUND COLUMNS TO BE PAINTED TO MATCH BASIC ROOM COLOR. SEE FINISH SCHEDULE FOR AREAS WITH COLUMN WRAP TO BE PAINTED WITH ACCENT COLOR.

H. CEILING TILE AND METAL TRIM TO BE CUT AND FITTED TO PROVIDE A CLEAN AND NEAT CONDITION.

I. CEILING TILE GRID LAYOUTS SHALL BE COORDINATED WITH CEILING PENETRATIONS SUCH AS COLUMNS TO AVOID CONFLICTS WITH LIGHTING, HVAC, ETC. LAYOUTS SHOULD BE ADJUSTED TO COMPENSATE FOR ACTUAL FIELD DIMENSIONS AND SUCH CONFLICTS AS MIGHT OCCUR.

J. ALL EXPOSED METAL WALL TIES TO RECEIVE PRIMER COAT PER SPECIFICATIONS.

K. PAINTING CONTRACTOR SHALL INVESTIGATE ALL PRIMED SURFACES TO RECEIVE FINISH COATING FOR COMPATIBILITY. WHERE NON-COMPATIBLE PRIMERS EXISTS, A BARRIER COAT SHALL BE APPLIED PRIOR TO APPLICATION OF FINISH COAT.

REFLECTED CEILING LEGEND

- 2'X 2' RECESSED LIGHT FIXTURE
- RECESSED CANISTER LIGHT FIXTURE
- 2'X 4' RECESSED LIGHT FIXTURE
- SUPPLY AIR DIFFUSER
- RETURN AIR GRILLE
- WALL BUILT FULL HEIGHT TO ROOF DECK OR FLOOR DECK ABOVE
- INTERIOR PARTITION BUILT TO MINIMUM 4" ABOVE FINISH CEILING

IDENTIFICATION LEGEND

SECTION OR DETAIL
SCALE

2 APL-02 APL-01

SECT. NUMBER DET. NUMBER DOOR DETAIL NUMBER

DWG. WHERE SECTION OR DETAIL IS CUT

DWG. WHERE SECTION OR DETAIL IS SHOWN

2 APL-01 — SECTION NUMBER; DWG. WHERE SECTION IS SHOWN

AREA COVERED BY DETAIL

2 APL-01 — DETAIL NUMBER; DWG. WHERE DETAIL IS SHOWN

2 APL-02 — ELEV. NUMBER; DWG. WHERE ELEV. IS SHOWN

123 DOOR NUMBER

A TOILET ACCESSORY LETTER

123 ROOM NUMBER

P1 PARTITION TYPE NUMBER

DRAWING LIST – ARCHITECTURAL

AGE-01	COVER SHEET
AGE-02	DRAWING INDEX
AGE-03	GEN. NOTES, LEGENDS, ABBREVIATIONS
APL-01	90 MODULE BEQ 'A' – GROUND LEVEL FLOOR PLAN
APL-02	90 MODULE BEQ 'A' – SECOND LEVEL FLOOR PLAN
APL-03	90 MODULE BEQ 'A' – THIRD LEVEL FLOOR PLAN
APL-04	90 MODULE BEQ 'A' – ROOF PLAN
APL-05	60 MODULE BEQ 'C' – GROUND & SECOND LEVEL FLOOR PLAN
APL-06	60 MODULE BEQ 'C' – THIRD LEVEL FLOOR PLAN
APL-07	60 MODULE BEQ 'C' – ROOF PLAN, LARGE SCALE MODULE 'B' PLAN, COVERED SEATING PLAN
APL-08	COMMUNITY CENTER PLANS
APL-09	UTILITY BUILDING FLOOR PLAN, ELEVATIONS & SECTION
ARC-01	TYP. FLOOR R.C. PLAN – 90 MODULE BEQ 'A'
ARC-02	TYP. FLOOR R.C. PLAN – 60 MODULE BEQ 'C'
AEL-01	INTERIOR ELEVATIONS & DETAILS / BEQ
AEL-02	INTERIOR ELEVATIONS / COMMUNITY CENTER
AEL-03	WEST ELEVATION @ 90 MODULE BEQ 'A'
AEL-04	EAST ELEVATION @ 90 MODULE BEQ 'A'
AEL-05	EAST & WEST ELEVATION @ 60 MODULE BEQ 'C'
AEL-06	NORTH / SOUTH ELEV. @ 60/90 MODULE BEQ, COMM. CENTER ELEVATIONS
ASE-01	TYP. CROSS SECTION @ 60/90 MODULE BEQ & DETAILS
ASE-02	STAIR SECTIONS & DETAILS
ASE-03	SECTIONS @ COMMUNITY CENTER
ASE-04	SECTIONS @ COMM. CENTER AND COVERED SEATING
ASC-01	FINISH SCHEDULE
ASC-02	DOOR SCHEDULE & DOOR TYPES
ADE-01	DOOR DETAILS
ADE-02	DOOR & WINDOW DETAILS

J.A. JONES MANAGEMENT SERVICES
J.A. JONES OF THE CAROLINAS
LOCKWOOD GREENE Consulting·Design·Construction Atlanta, Georgia

DSGN P. BLACKBURN | DR N. BABB | CHK AB / DY
SUPV F.S.S. | CH ENGR P. BLACKBURN
SUBMITTED BY (FIRM MEMBER-TITLE): V.P. | 03-MAY-1999 DATE
TECHNICAL BRANCH
FPE

DRAWING REVISIONS

Rev.	Description	Prep By	Date	Apprvd.
0	FINAL DESIGN SUBMITTAL	NGB	5/3/99	PB/LB
1	ISSUE FOR RECORD	NGB	6/1/01	LB/DT

MCAS BEAUFORT, S.C.
BACHELOR ENLISTED QUARTERS – PHASE IV
ARCHITECTURAL
GEN. NOTES, LEGENDS, ABBREVIATIONS & ARCH. DRAWING LIST

APPROVED | DATE | EFD FOR COMMANDER, NAVFAC

Naval Facilities Engineering Command
Southern Division
Charleston, South Carolina

RECORD DRAWING DATE 01-JUN-01
CODE I.D. NO. 80091
DRAWING SIZE: D
SPEC. NO.06-98-0690
CONSTRN. CONTR. NO. N62467-98-D-0690
NAVFAC DRAWING NO. 5364375
SHEET 3 OF 34
AGE-03

$$$$ USERNAME $$$$ $$$$ DATE&TIME $$$$ $$$$ DESIGN FILE NAME $$$$

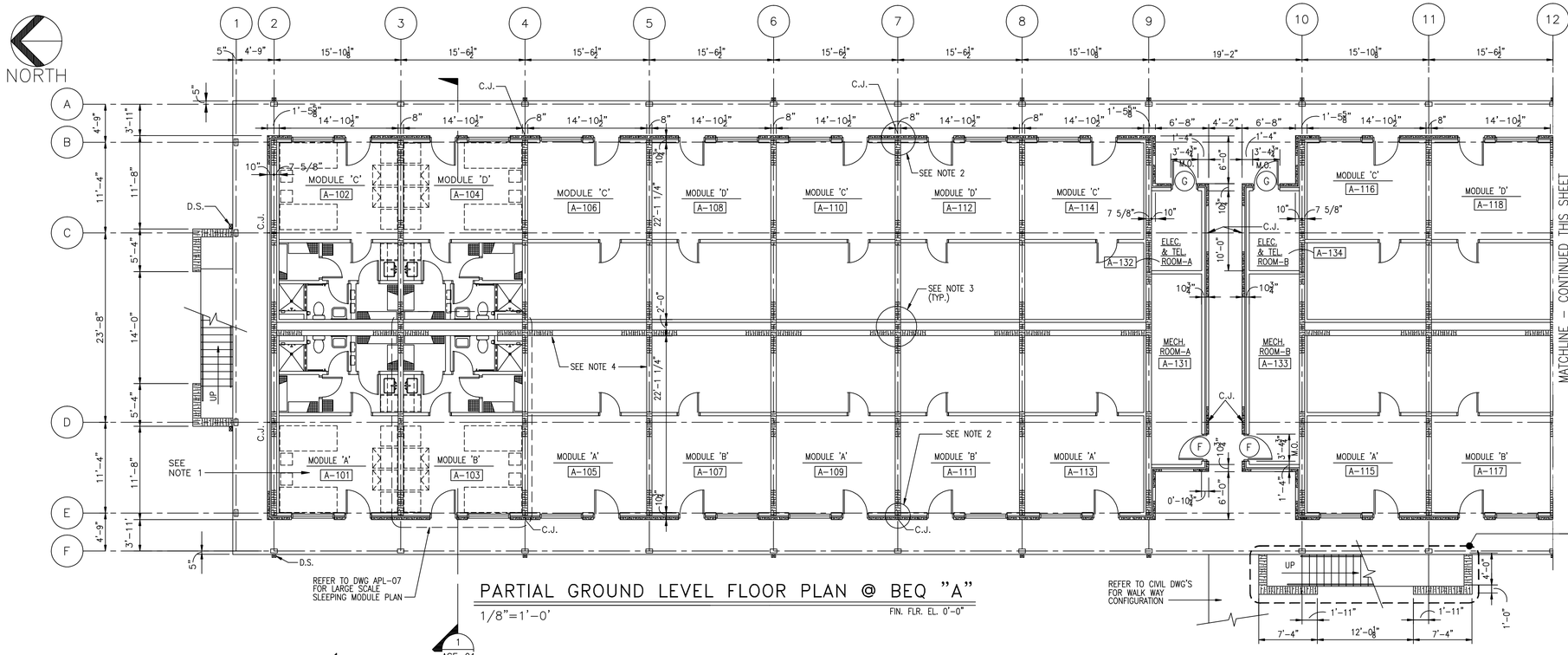

PARTIAL GROUND LEVEL FLOOR PLAN @ BEQ "A"

1/8"=1'-0" FIN. FLR. EL. 0'-0"

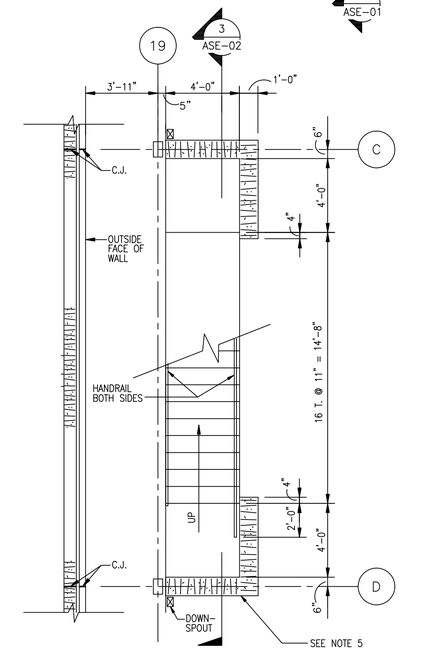

PARTIAL FIRST LEVEL FLOOR LARGE SCALE PLAN @ SOUTH STAIR

1/4"=1'-0"

NOTE:
NORTH STAIR, ADJACENT TO COL. LINE 1, IS SIMILAR TO & OPPOSITE HAND.

NOTE:

1. LETTER/NUMBER DESIGNATION REPRESENTS THE MODULE ROOM NUMBER FOR SIGNAGE. THE MODULE LETTER 'A', 'B', 'C' OR 'D' IS REFERENCED IN THE FINISH SCHEDULE.
2. 4 #5 BARS @ 8" O.C. CONT. IN FULLY GROUTED CELLS, MATCH DOWEL LOCATIONS PER STRUCTURAL, TYPICAL FOR ALL BEARING WALLS.
3. 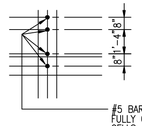

4. TYPICAL WALL REINF. #5 BAR, IN FULLY GROUTED CELL, @ 48" O.C.
5. 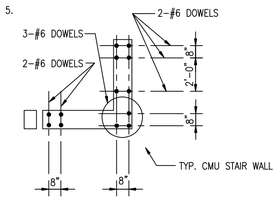

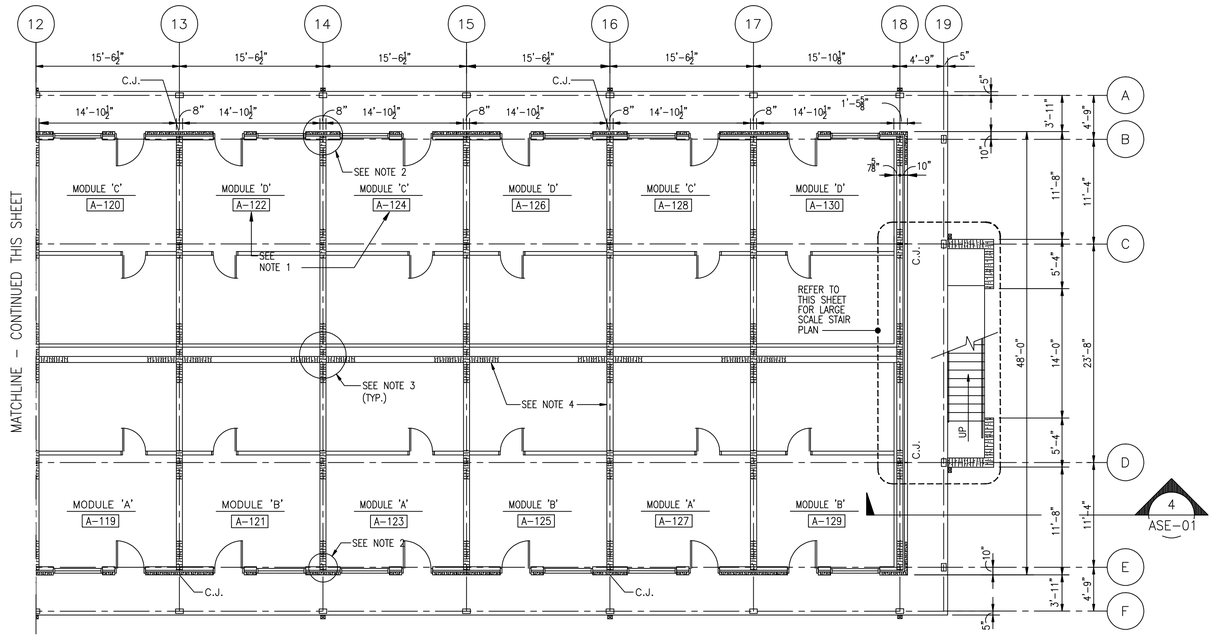

PARTIAL GROUND LEVEL FLOOR PLAN @ BEQ "A"

1/8"=1'-0" FIN. FLR. EL. 0'-0" (CONT.)

0 4 8 16 24
1/8"=1'-0"

0 4 8 12
1/4"=1'-0"

J.A. JONES OF THE CAROLINAS
LOCKWOOD GREENE Consulting Engineers

DSGN	P. BLACKBURN	DR	N. BABB	CHK	AB / DY
SUPV	P.S.S.	CH ENGR	P. BLACKBURN		
SUBMITTED BY (PRM MEMBER TITLE)				DATE	03-MAY-1999
TECHNICAL BRANCH					

V.P.

DRAWING REVISIONS

Rev.	Description	Prep By	Date	Apprvd.
0	FINAL DESIGN SUBMITTAL	NGB	5/3/99	PB/LB
1	REVISED AS NOTED	SM/RM	7/12/99	PB/DT
2	ISSUE FOR RECORD	NGB	6/1/01	LB/DT

BEAUFORT, S.C.

MCAS
BACHELOR ENLISTED QUARTERS - PHASE IV
ARCHITECTURAL
90 MODULE BEQ 'A' GROUND LEVEL FLOOR PLAN

APPROVED DATE

EFD FOR COMMANDER, NAVFAC

Naval Facilities Engineering Command
Southern Division
Charleston, South Carolina

RECORD DRAWING DATE	01-JUN-01
CODE I.D. NO.	80091
DRAWING SIZE:	D
SPEC. NO.	06-98-0690
CONSTRN. CONTR. NO.	N62467-98-D-0690
NAVFAC DRAWING NO.	5364376
SHEET	4 OF 34

APL-01

$$$$ USERNAME $$$$ $$$$ DATE&TIME $$$$ $$$$ DESIGN FILE NAME $$$$

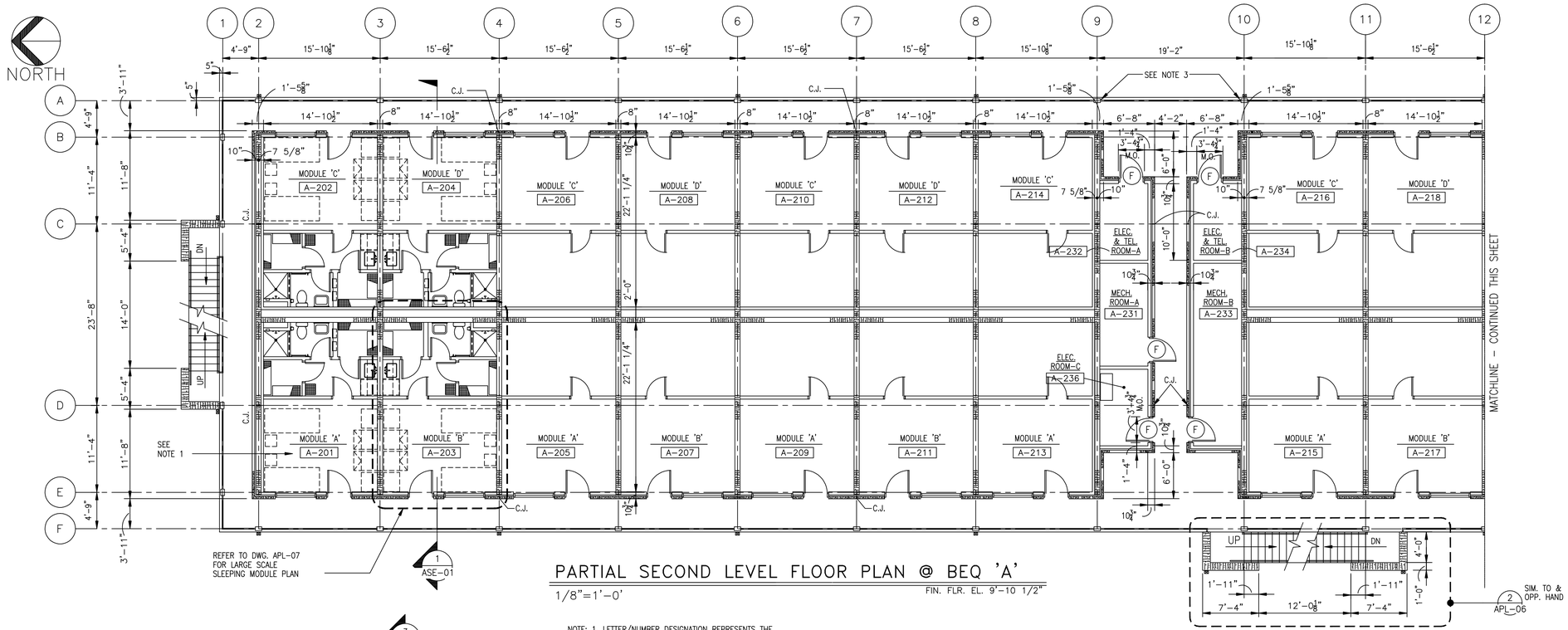

PARTIAL SECOND LEVEL FLOOR PLAN @ BEQ 'A'

1/8"=1'-0' FIN. FLR. EL. 9'-10 1/2"

NOTE: 1. LETTER/NUMBER DESIGNATION REPRESENTS THE MODULE ROOM NUMBER FOR SIGNAGE. THE MODULE LETTER 'A', 'B', 'C' OR 'D' IS REFERENCED IN THE FINISH SCHEDULE.

2. REFER TO DWG. APL-01 FOR MASONRY REINF.

3. PROVIDE & INSTALL MANUFACTURER'S REMOVABLE GUARDRAIL ASSEMBLY (OF THE GUARDRAIL SYSTEM SPECIFIED & DETAILED). GUARDRAIL SECTIONS TO BE REMOVABLE BY TRAINED PERSONEL ONLY.

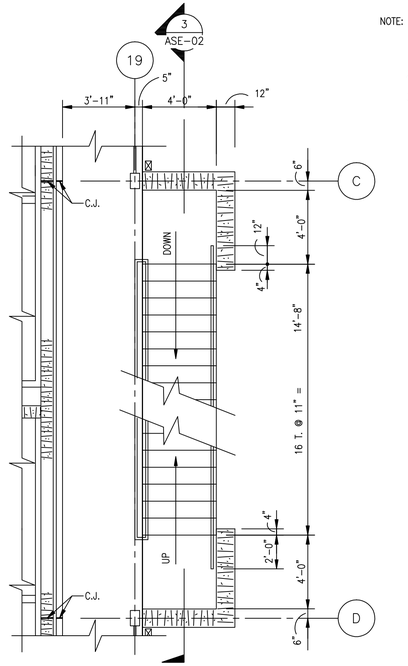

PARTIAL SECOND LEVEL FLOOR LARGE SCALE PLAN @ SOUTH STAIR

1/4"=1'-0'

NOTE:
NORTH STAIR, ADJACENT TO COL. LINE 1, IS SIMILAR TO & OPPOSITE HAND.

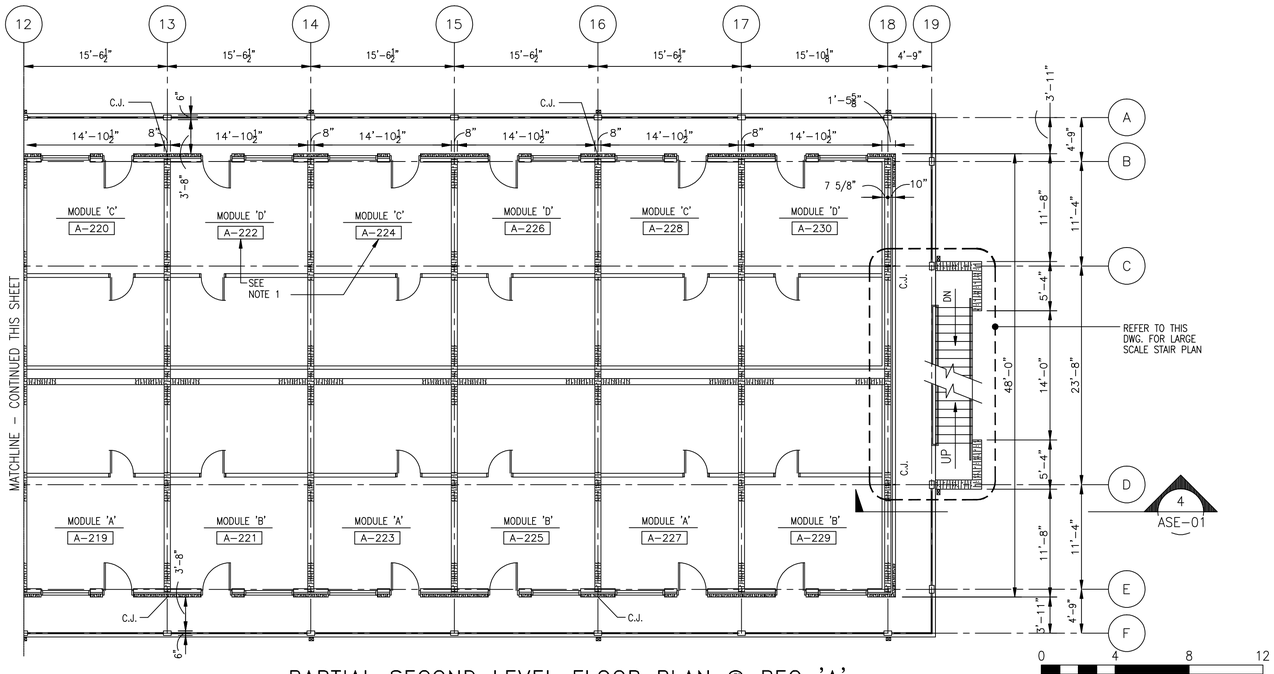

PARTIAL SECOND LEVEL FLOOR PLAN @ BEQ 'A'

1/8"=1'-0' FIN. FLR. EL. 9'-10 1/2" (CONT.)

0 4 8 12
1/4"=1'-0"

0 4 8 16 24
1/8"=1'-0"

J.A. JONES OF THE CAROLINAS
LOCKWOOD GREENE Consulting Engineers
DSGN P. BLACKBURN DR N. BABB CHK AB / DY
SUPV. P.S.S. CH ENGR P. BLACKBURN
SUBMITTED BY (PRM MEMBER TITLE): V.P. 03-MAY-1999
TECHNICAL BRANCH
PFE

DRAWING REVISIONS

Rev.	Description	Prep By	Date	Apprvd.
0	FINAL DESIGN SUBMITTAL	NGB	5/3/99	PB/LB
1	REVISED AS NOTED	SM/PW	7/12/99	PD/DT
2	ISSUE FOR RECORD	NGB	6/1/01	LB/DT

EFD FOR COMMANDER, NAVFAC DATE

BEAUFORT, S.C.
BACHELOR ENLISTED QUARTERS - PHASE IV
ARCHITECTURAL
90 MODULE BEQ 'A' SECOND LEVEL FLOOR PLAN

MCAS APPROVED DATE

Naval Facilities Engineering Command
Southern Division
Charleston, South Carolina

RECORD DRAWING DATE	01-JUN-01
CODE I.D. NO.	80091
DRAWING SIZE:	D
SPEC. NO.	06-98-0690
CONSTRN. CONTR. NO.	N62467-98-D-0690
NAVFAC DRAWING NO.	5364377
SHEET	5 OF 34

APL-02

$$$$ USERNAME $$$$ $$$$ DATE&TIME $$$$ $$$$ DESIGN FILE NAME $$$$

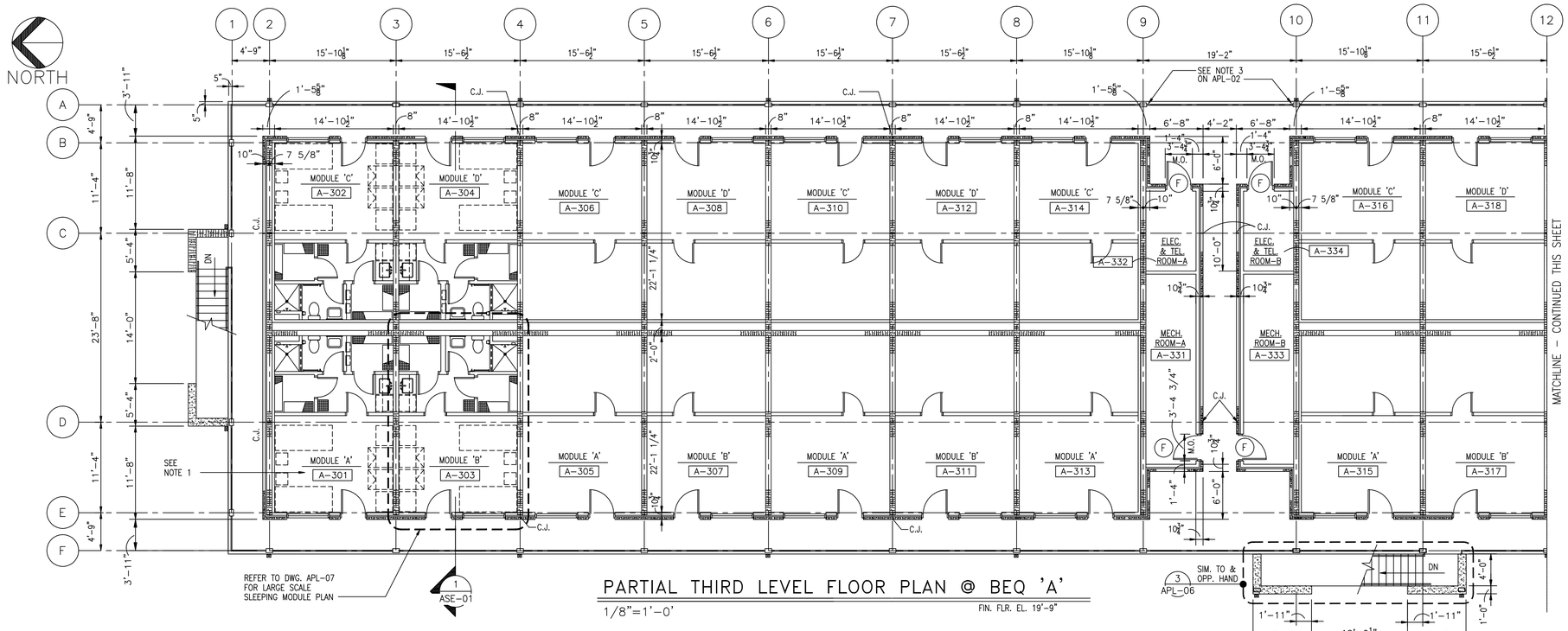

PARTIAL THIRD LEVEL FLOOR PLAN @ BEQ 'A'

1/8"=1'-0" FIN. FLR. EL. 19'-9"

NOTE: 1. LETTER/NUMBER DESIGNATION REPRESENTS THE MODULE ROOM NUMBER FOR SIGNAGE. THE MODULE LETTER 'A', 'B', 'C' OR 'D' IS REFERENCED IN THE FINISH SCHEDULE.

2. REFER TO APL-01 FOR MASONRY REINF.

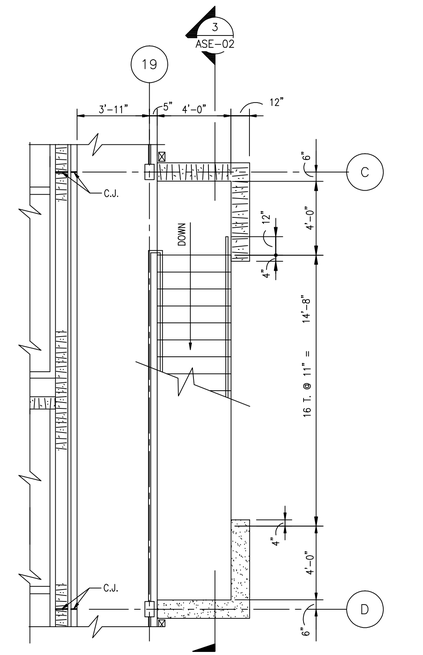

PARTIAL THIRD LEVEL FLOOR LARGE SCALE PLAN @ SOUTH STAIR

1/4"=1'-0"

NOTE: NORTH STAIR, ADJACENT TO COL. LINE 1, IS SIMILAR TO & OPPOSITE HAND.

0 4 8 12
1/4"=1'-0"

0 4 8 16 24
1/8"=1'-0"

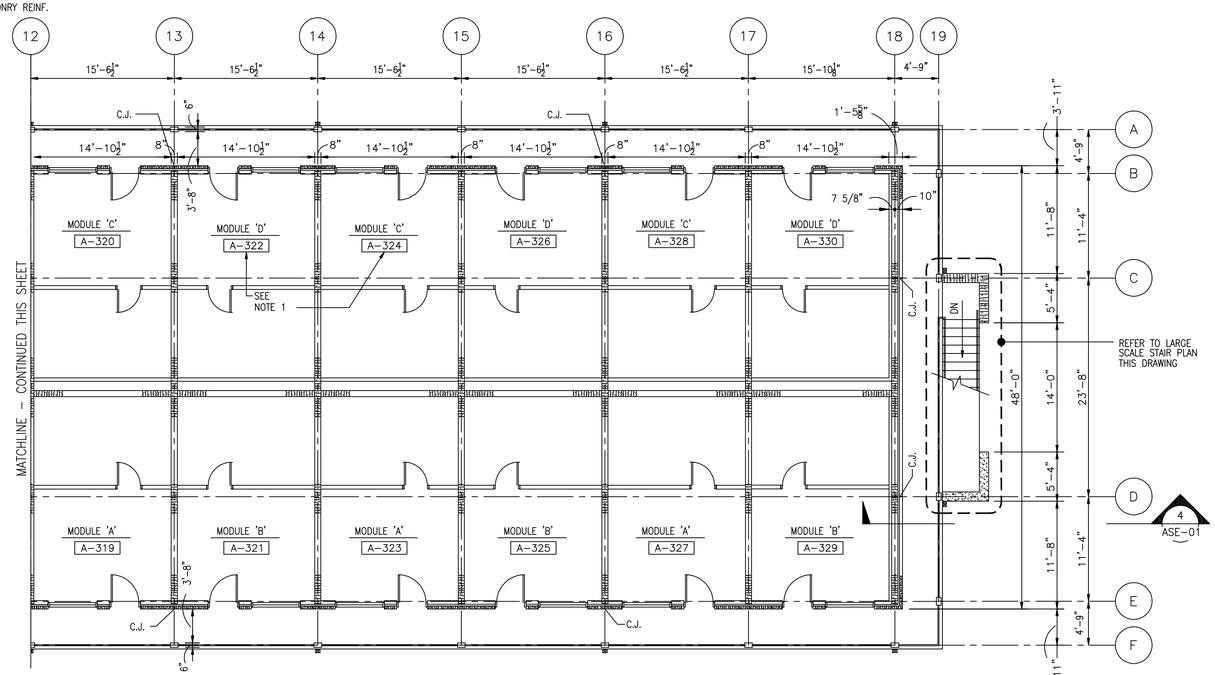

PARTIAL THIRD LEVEL FLOOR PLAN @ BEQ 'A'

1/8"=1'-0" FIN. FLR. EL. 19'-9" (CONT.)

J.A. JONES OF THE CAROLINAS
LOCKWOOD GREENE Consulting Engineers

DSGN	P. BLACKBURN	DR	N. BABB	CHK	AB / DY
SUPV.	P.S.S.	CH ENGR	P. BLACKBURN		

SUBMITTED BY (PRM MEMBER, TITLE): V.P. 03-MAY-1999 DATE

TECHNICAL BRANCH

FPE

Rev.	Description	Prep By	Date	Apprvd.
0	FINAL DESIGN SUBMITTAL	NGB	5/3/99	PB/LB
1	REVISED AS NOTED	SM/RM	7/12/99	PD/DT
2	ISSUE FOR RECORD	NGB	6/1/01	LB/DT

DRAWING REVISIONS

MCAS BEAUFORT, S.C.

BACHELOR ENLISTED QUARTERS - PHASE IV

ARCHITECTURAL

90 MODULE BEQ 'A' THIRD LEVEL FLOOR PLAN

APPROVED DATE

EFD FOR COMMANDER, NAVFAC

Naval Facilities Engineering Command
Southern Division
Charleston, South Carolina

RECORD DRAWING DATE	01-JUN-01
CODE I.D. NO.	80091
DRAWING SIZE:	D
SPEC. NO.	06-98-0690
CONSTRN. CONTR. NO.	N62467-98-D-0690
NAVFAC DRAWING NO.	5364378
SHEET 6	OF 34

APL-03

$$$$ USERNAME $$$$ $$$$ DATE&TIME $$$$ $$$$ DESIGN FILE NAME $$$$

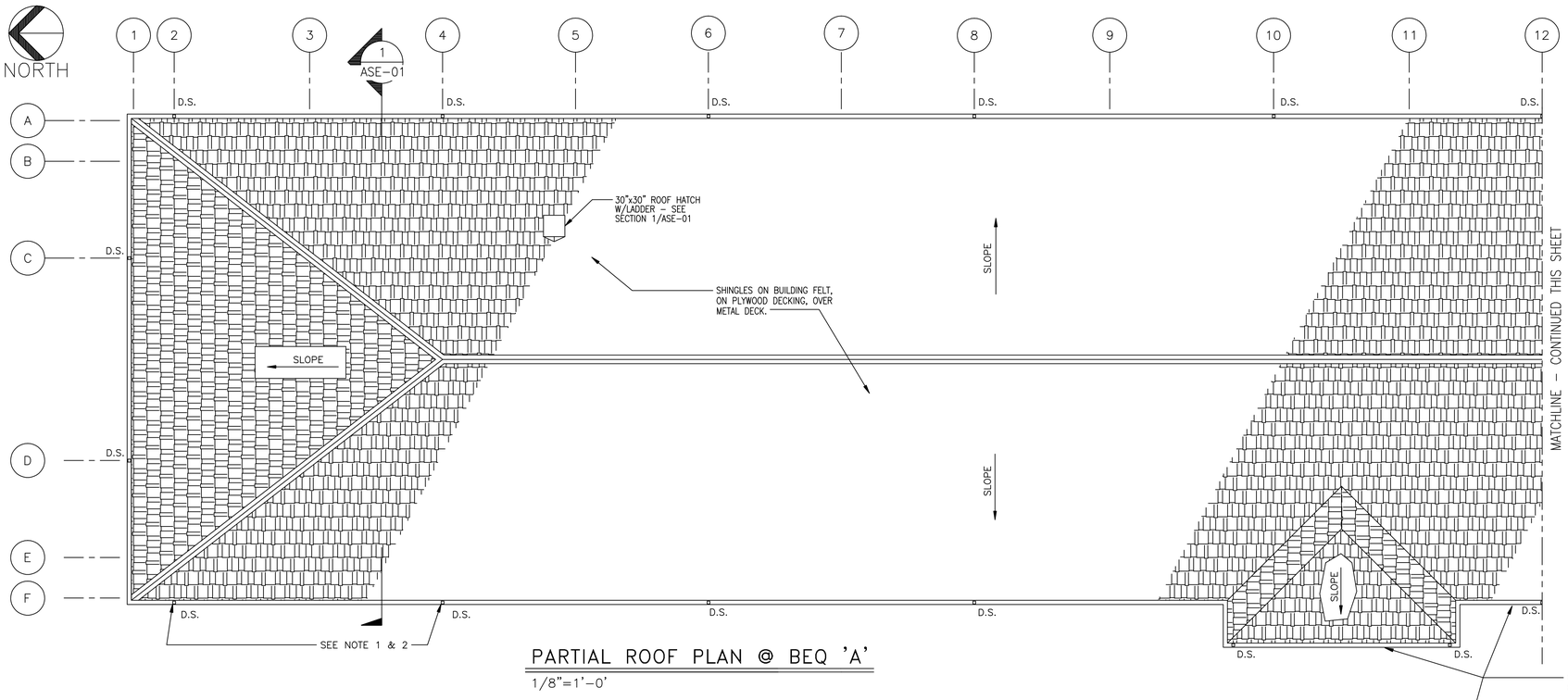

PARTIAL ROOF PLAN @ BEQ 'A'

1/8"=1'-0'

GENERAL NOTES:

1. REFER TO BUILDING ELEVATIONS & SECTIONS FOR ADDITIONAL DOWNSPOUT NOTES & DIMENSIONS.
2. ALL DOWNSPOUTS ARE 3"x5" PRE-FINISHED ALUM. U.N.O.

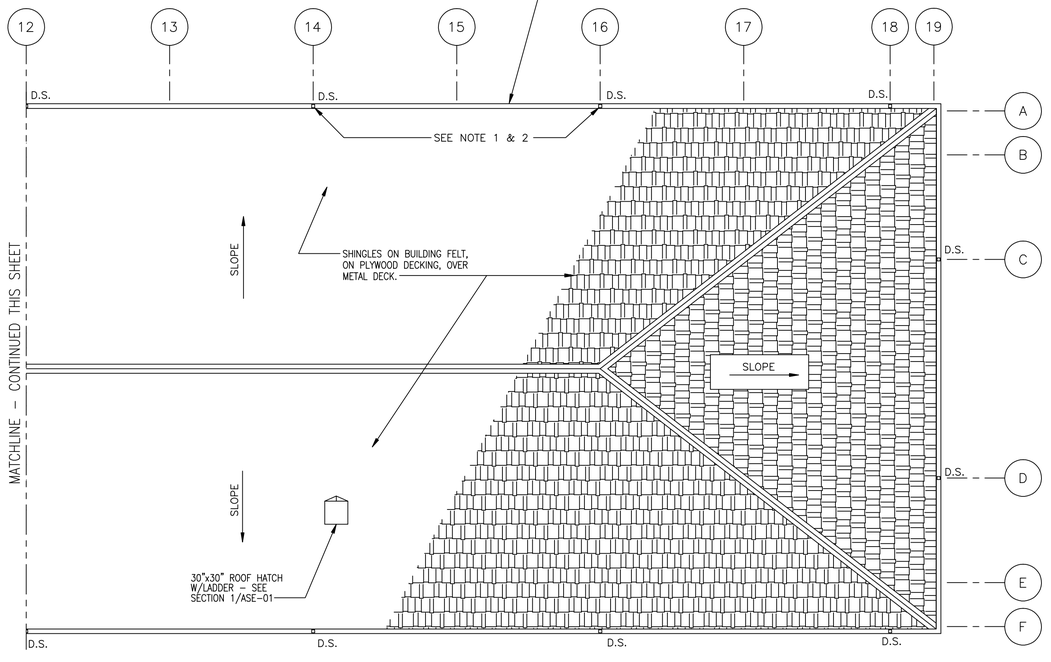

PARTIAL ROOF PLAN @ BEQ 'A'

1/8"=1'-0'

0 4 8 16 24

1/8"=1'-0"

J.A. JONES OF THE CAROLINAS

LOCKWOOD GREENE Consulting Engineers and Constructors

	DSGN	DR	CHK	APPROVED
	P. BLACKBURN	N. BABB	AB / DY	
	SUPV.	CH ENGR		
	P.S.S.	P. BLACKBURN		
SUBMITTED BY (PRINT NAME & TITLE):			DATE	
Jerry Steel, V.P.			03-MAY-1999	
TECHNICAL BRANCH				
FPE				

DRAWING REVISIONS

Rev.	Description	Prep By	Date	Apprvd.
0	FINAL DESIGN SUBMITTAL	NGB	5/3/99	PB/LB
1	ISSUE FOR RECORD	NGB	6/1/01	LB/DT

MCAS BEAUFORT, S.C.

BACHELOR ENLISTED QUARTERS - PHASE IV

ARCHITECTURAL

90 MODULE BEQ 'A' ROOF PLAN

DATE

EFD FOR COMMANDER, NAVFAC

Naval Facilities Engineering Command

Southern Division

Charleston, South Carolina

RECORD DRAWING DATE 01-JUN-01
CODE I.D. NO. 80091
DRAWING SIZE: D
SPEC. NO.06-98-0690
CONSTRN. CONTR. NO. N62467-98-D-0690
NAVFAC DRAWING NO. 5364379
SHEET 7 OF 34
APL-04

$$$$ USERNAME $$$$ $$$$ DATE&TIME $$$$ $$$$ DESIGN FILE NAME $$$$

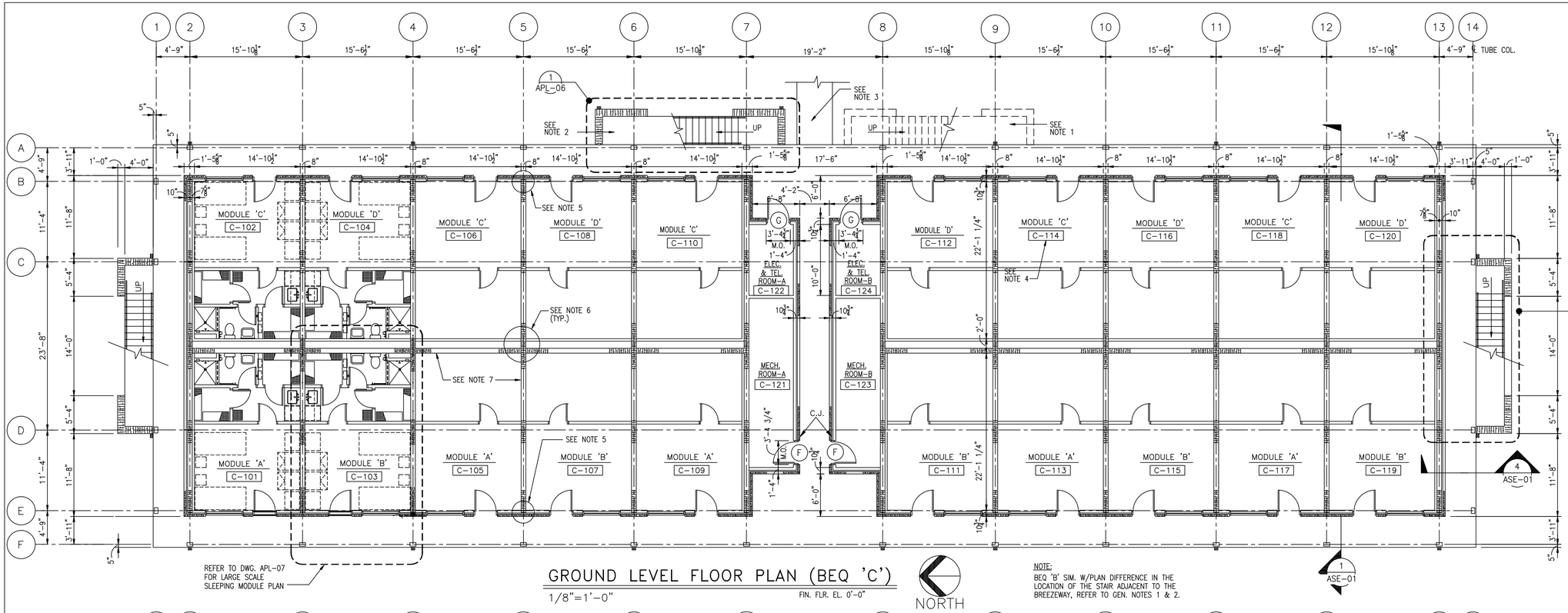

GROUND LEVEL FLOOR PLAN (BEQ 'C')

1/8"=1'-0" FIN. FLR. EL. 0'-0"

NORTH

NOTE:
BEQ 'B' SIM. W/PLAN DIFFERENCE IN THE LOCATION OF THE STAIR ADJACENT TO THE BREEZEWAY, REFER TO GEN. NOTES 1 & 2.

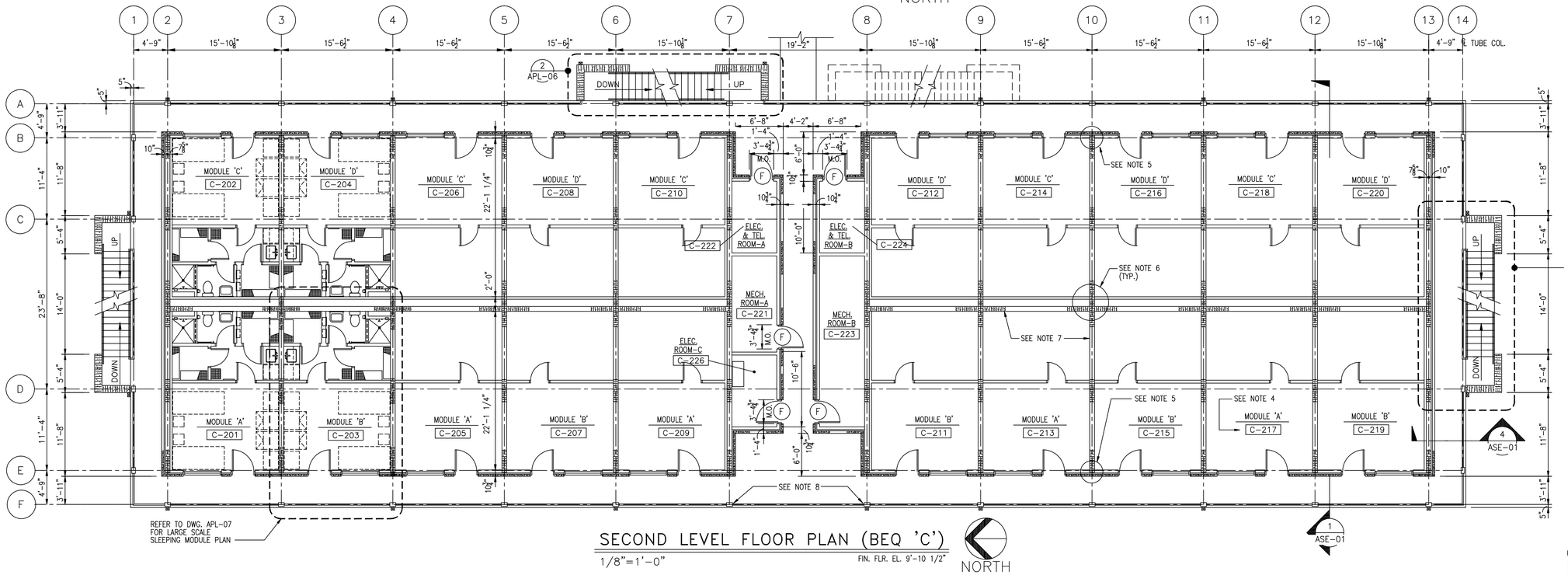

SECOND LEVEL FLOOR PLAN (BEQ 'C')

1/8"=1'-0" FIN. FLR. EL. 9'-10 1/2"

NORTH

GENERAL NOTES:

1. BREEZWAY STAIR LOCATION FOR BEQ 'B' ONLY. REFER TO CIVIL DWG'S FOR LOCATION OF BEQ 'B' ON THE PHASE IV SITE.
2. BREEZWAY STAIR LOCATION FOR BEQ 'C' ONLY. REFER TO CIVIL DWG'S FOR LOCATION OF BEQ 'C' ON THE PHASE IV SITE.
3. REFER TO CIVIL DRAWINGS FOR WALK WAY CONFIGURATION.
4. ROOM SIGNAGE FOR MODULE 'C'. ROOM SIGNAGE FOR MODULE 'B' SIM. EXCEPT PREFIX 'B'; (EXAMPLE B-114).
5. 4 #5 BARS @ 8" O.C. CONT. IN FULLY GROUTED CELLS, MATCH DOWEL LOCATIONS PER STRUCTURAL, TYPICAL FOR ALL BEARING WALLS.
6. 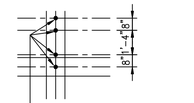

7. TYPICAL WALL REINF. #5 BAR, IN FULLY GROUTED CELL, @ 48" O.C.
8. PROVIDE & INSTALL MANUFACTURER'S REMOVABLE GUARDRAIL ASSEMBLY (OF THE GUARDRAIL SYSTEM SPECIFIED & DETAILED). SECTIONS TO BE REMOVABLE BY TRAINED PERSONNEL ONLY.

0 4 8 16 24
1/8"=1'-0"

J.A. JONES OF THE CAROLINAS
LOCKWOOD GREENE Consulting Engineers and Constructors

DSGN	P. BLACKBURN	DR	N. BABB	CHK	AS / DY
SURV	F.S.S.	SUBMITTED BY (PRM MEMBER TITLE)		CH ENGR	P. BLACKBURN
				DATE	03-MAY-1999

TECHNICAL BRANCH V.P.

Rev.	Description	Prep By	Date	Apprvd.
0	FINAL DESIGN SUBMITTAL	NGB	5/3/99	PB/LB
1	REVISED AS NOTED	SW/PM	7/12/99	PB/DT
2	ISSUE FOR RECORD	NGB	6/1/01	LB/DT

DRAWING REVISIONS

BEAUFORT, S.C.

MCAS

BACHELOR ENLISTED QUARTERS - PHASE IV

ARCHITECTURAL

60 MODULE BEQ 'C' GROUND & SECOND LEVEL FLOOR PLAN

DATE APPROVED

EFD FOR COMMANDER, NAVFAC

Naval Facilities Engineering Command
Southern Division
Charleston, South Carolina

RECORD DRAWING DATE	01-JUN-01
CODE I.D. NO.	80091
DRAWING SIZE:	D
SPEC. NO.	06-98-0690
CONSTRN. CONTR. NO.	N62467-98-D-0690
NAVFAC DRAWING NO.	5364380
SHEET 8	OF 34

APL-05

$$$$ USERNAME $$$$ $$$$ DATE&TIME $$$$ $$$$ DESIGN FILE NAME $$$$

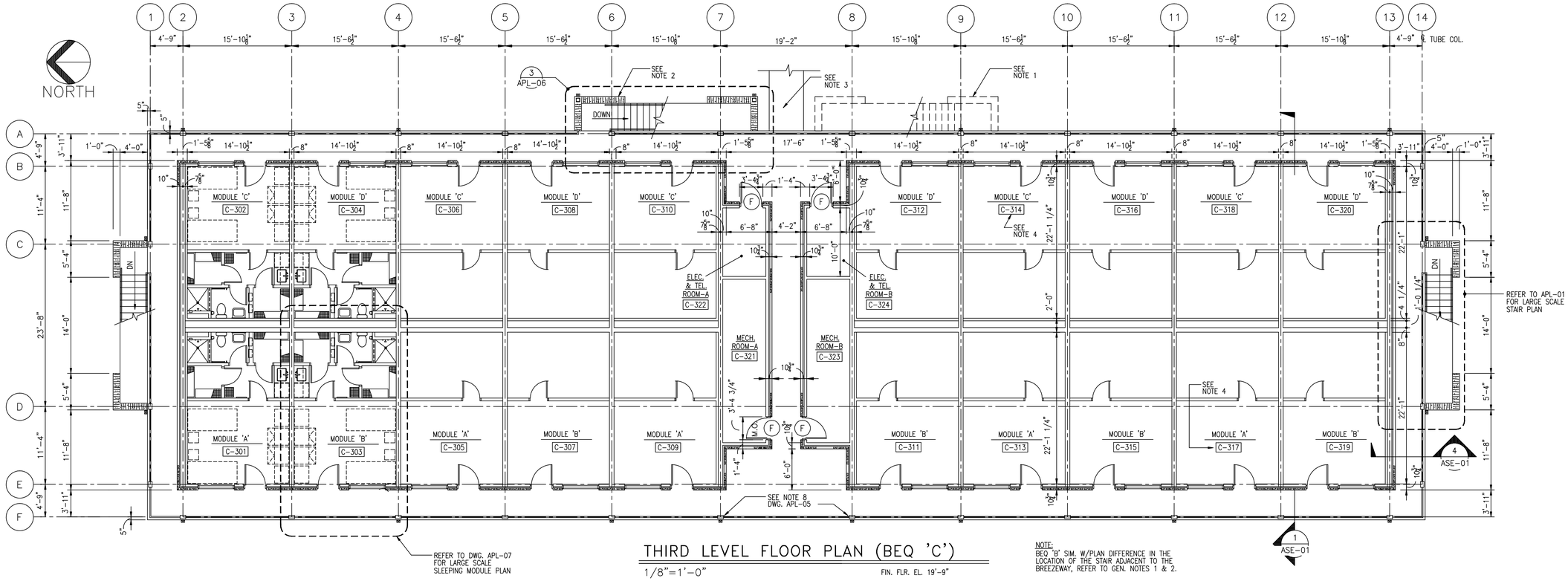

THIRD LEVEL FLOOR PLAN (BEQ 'C')

1/8"=1'-0" FIN. FLR. EL. 19'-9"

NOTE:
BEQ 'B' SIM. W/PLAN DIFFERENCE IN THE LOCATION OF THE STAIR ADJACENT TO THE BREEZEWAY, REFER TO GEN. NOTES 1 & 2.

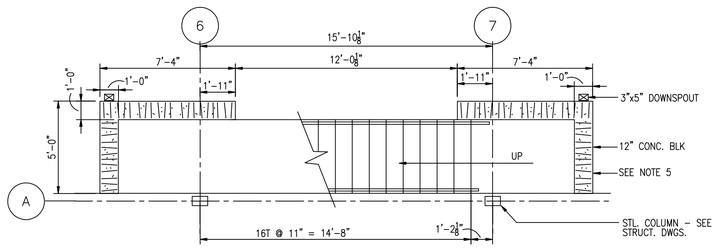

LARGE SCALE STAIR PLAN AT GROUND LEVEL
DETAIL 1 APL-06
1/4"=1'-0"

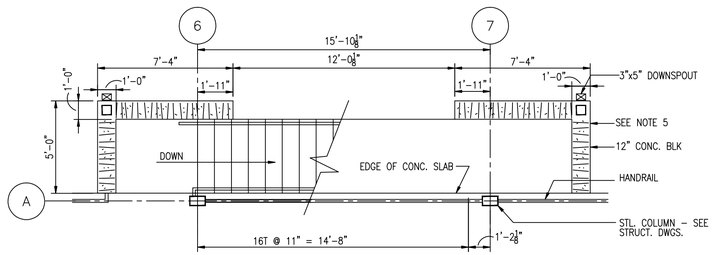

LARGE SCALE STAIR PLAN AT 3rd FLOOR LEVEL
DETAIL 3 APL-06
1/4"=1'-0"

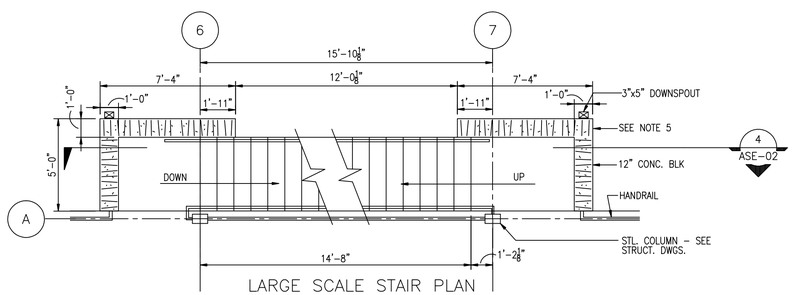

LARGE SCALE STAIR PLAN AT 2nd FLOOR LEVEL
DETAIL 2 APL-06
1/4"=1'-0"

GENERAL NOTES:

1. BREEZWAY STAIR LOCATION FOR BEQ 'B' ONLY. REFER TO CIVIL DWG'S FOR LOCATION OF BEQ 'B' ON THE PHASE IV SITE.
2. BREEZWAY STAIR LOCATION FOR BEQ 'C' ONLY. REFER TO CIVIL DWG'S FOR LOCATION OF BEQ 'C' ON THE PHASE IV SITE.
3. REFER TO CIVIL DRAWINGS FOR WALK WAY CONFIGURATION.
4. ROOM SINAGE FOR MODULE 'C'. ROOM SIGNAGE FOR MODULE 'B' SIM. EXCEPT PREFIX 'B'. EXAMPLE B-314
5.

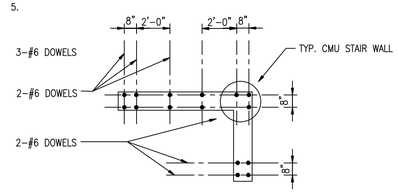

6. REFER TO APL-05 FOR MASONRY REINFORCING.

0 4 8 16 24
1/8"=1'-0"

0 4 8 12
1/4"=1'-0"

J.A. JONES OF THE CAROLINAS
LOCKWOOD GREENE Consulting Engineers
DSGN P. BLACKBURN DR N. BABB CHK AB / DY
SUPV. P.S.S. CH ENGR P. BLACKBURN
SUBMITTED BY (PRM MEMBER, TITLE): V.P. 03-MAY-1999
TECHNICAL BRANCH
FPE

DRAWING REVISIONS

Rev.	Description	Prep By	Date	Apprvd.
0	FINAL DESIGN SUBMITTAL	NGB	5/3/99	PB/LB
1	REVISED AS NOTED	SM/PM	7/12/99	PB/DT
2	ISSUE FOR RECORD	NGB	6/1/01	LB/DT

DATE EFD FOR COMMANDER, NAVFAC

MCAS BEAUFORT, S.C.
BACHELOR ENLISTED QUARTERS - PHASE IV
ARCHITECTURAL
60 MODULE BEQ 'C' THIRD LEVEL FLOOR PLAN
DATE APPROVED

Naval Facilities Engineering Command
Southern Division
Charleston, South Carolina

RECORD DRAWING DATE 01-JUN-01
CODE I.D. NO. 80091
DRAWING SIZE: D
SPEC. NO.06-98-0690
CONSTRN. CONTR. NO. N62467-98-D-0690
NAVFAC DRAWING NO. 5364381
SHEET 9 OF 34
APL-06

$$$$ USERNAME $$$$ $$$$ DATE&TIME $$$$ $$$$ DESIGN FILE NAME $$$$

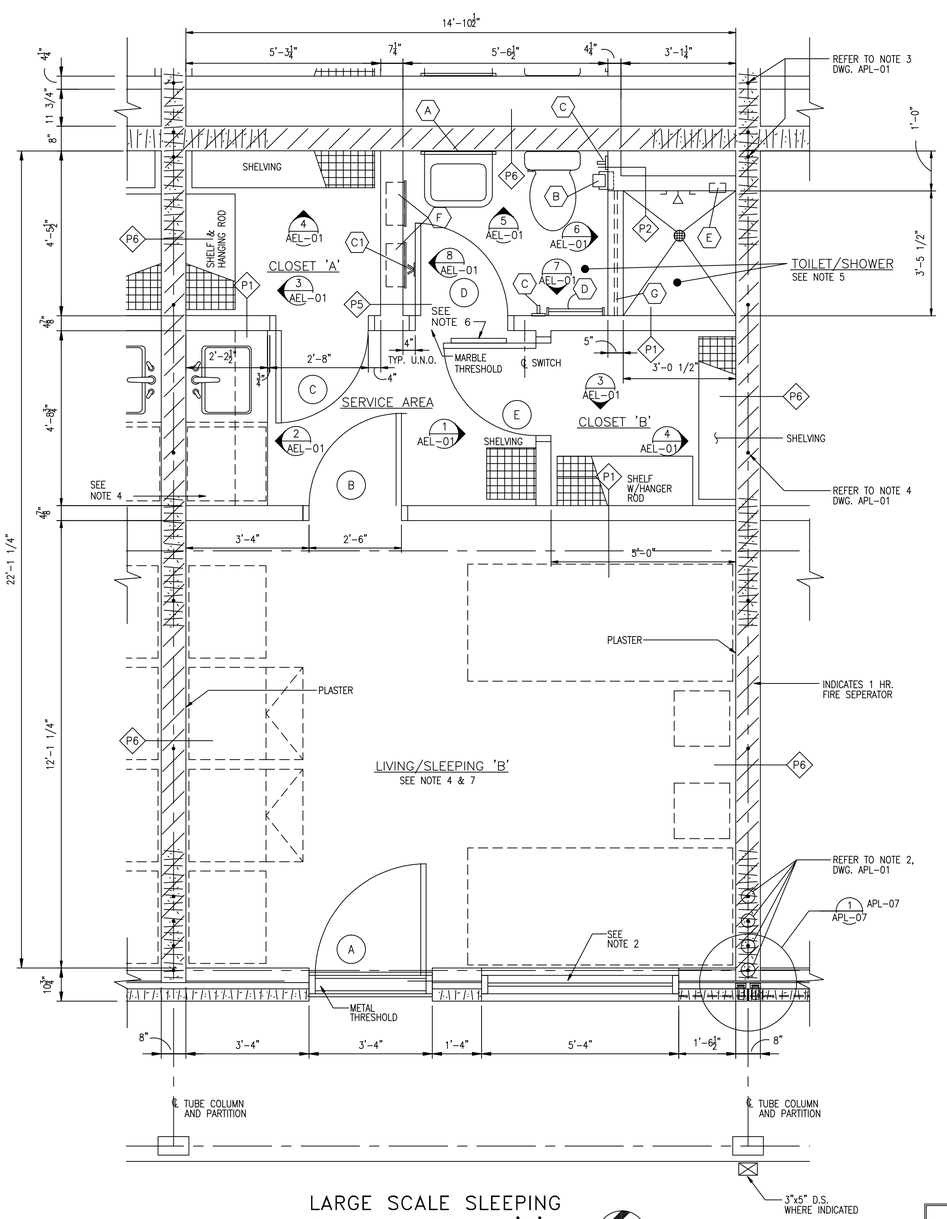

LARGE SCALE SLEEPING PLAN – MODULE 'B'

1/2"=1'-0"

NORTH

NOTE: 1. MODULES 'A','C' & 'D', SIMILAR TO 'B'.

2. REFER TO 4, 5, 6/ADE-02 FOR WINDOW DETAILS.

3. REFER TO DRAWING AEL-01 FOR PARTITION TYPES.

4. ALL FURNITURE (IN LIVING/SLEEPING ROOM) AND UNDERCOUNTER REFRIGERATOR (IN SERVICE AREA) IS N.I.C.

5. REFER TO 10/AEL-01 FOR SHOWER FLOOR DETAIL.

6. 18"W x 60"H

7. 12'-1 1/4"x14'-10 1/2"=12.1042x14.8750=180.0499 S.F.

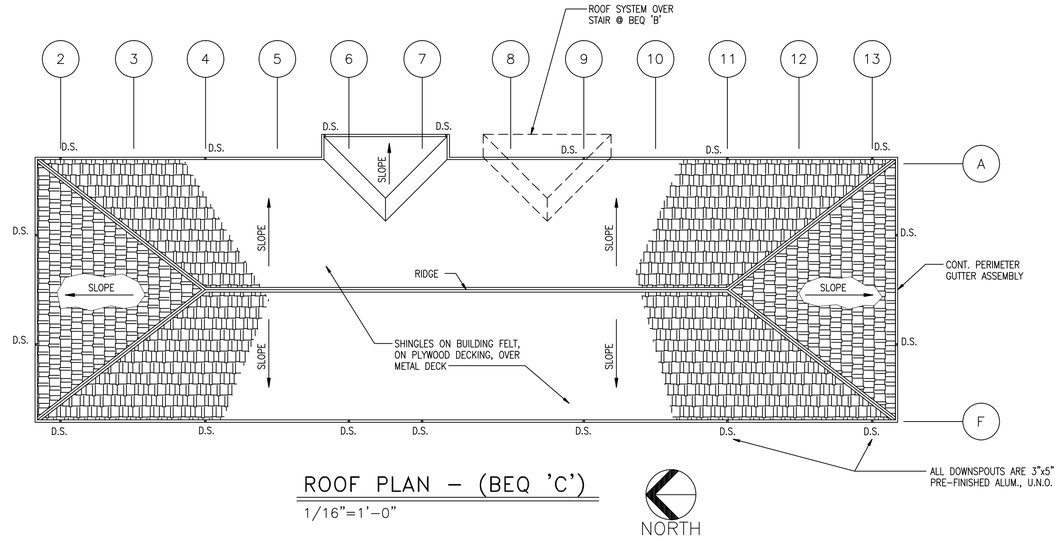

ROOF PLAN – (BEQ 'C')

1/16"=1'-0"

NORTH

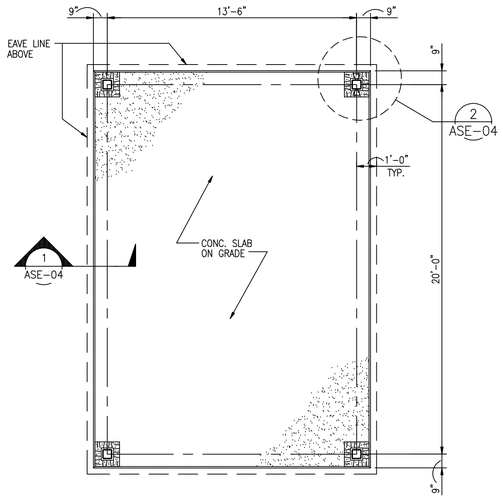

COVERED SEATING AREA PLAN

1/4"=1'-0"

NORTH

TOILET ACCESSORIES LEGEND			
SYMB.	DESCRIPTION	MOUNTING HEIGHT	MODEL No.
A	MIRROR	TOP @ 76"	B-165 1830
B	TOILET PAPER DISPENSER	℄ ROLL @ 30"	B-6677
C	ROBE HOOK (SINGLE)	℄ @ 48"	B-2116 x 18" L.
C1	ROBE HOOK (DOUBLE)	℄ @ 48"	
D	TOWEL BAR	℄ @ 48"	B-530x18
E	SOAP DISH	℄ @ 48"	B-4390
F	MEDICINE CABINET	TOP @ 76"	B-398
G	SHOWER ROD	℄ @ 74"	B-6047

TYPICAL – ALL ACCESSORIES TO HAVE SATIN FINISH.

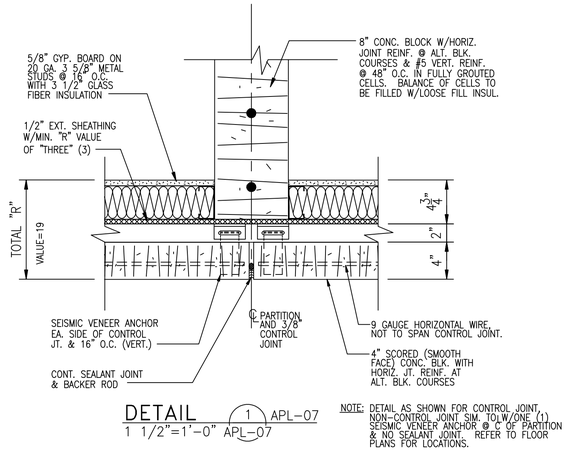

DETAIL

1 APL-07

1 1/2"=1'-0" APL-07

NOTE: DETAIL AS SHOWN FOR CONTROL JOINT, NON-CONTROL JOINT SIM. TO W/ONE (1) SEISMIC VENEER ANCHOR @ ℄ OF PARTITION & NO SEALANT JOINT. REFER TO FLOOR PLANS FOR LOCATIONS.

0 8 16 32 48
1/16"=1'-0"

0 4 8 12
1/4"=1'-0"

0 2 4 6
1/2"=1'-0"

0 1 2
1 1/2"=1'-0"

J.A. JONES
J.A. JONES OF THE CAROLINAS
LOCKWOOD GREENE
Consulting Engineers
DSGN P. BLACKBURN | DR N. BABB | CHK AB / DY
SUPV. F.S.S. | CH ENGR P. BLACKBURN
SUBMITTED BY (FIRM NAME/TITLE): V.P. | 03-MAY-1999 DATE
TECHNICAL BRANCH | LB/DT | PPE

DRAWING REVISIONS

Rev.	Description	Prep By	Date	Apprvd.
0	FINAL DESIGN SUBMITTAL	NGB	5/3/99	PB/LB
1	REVISED AS NOTED	SW/PM	7/12/99	PB/DT
2	REVISED AS NOTED	PAB	10/28/99	PB/LB
3	ISSUE FOR RECORD	NGB	6/1/01	LB/DT

MCAS BEAUFORT, S.C.

BACHELOR ENLISTED QUARTERS – PHASE IV

ARCHITECTURAL

60 MODULE BEQ 'C' – ROOF PLAN, LARGE SCALE COVERED SEATING PLAN

LARGE SCALE MODULE 'B' PLAN, COVERED SEATING PLAN

APPROVED DATE

EFD FOR COMMANDER, NAVFAC

Naval Facilities Engineering Command
Southern Division
Charleston, South Carolina

RECORD DRAWING DATE 01-JAN-01

CODE I.D. NO. 80091

DRAWING SIZE: D

SPEC. NO.06-98-0690

CONSTRN. CONTR. NO. N62467-98-D-0690

NAVFAC DRAWING NO. 5364382

SHEET 10 OF 28

APL-07

$$$$ USERNAME $$$$ $$$$ DATE&TIME $$$$ $$$$ DESIGN FILE NAME $$$$

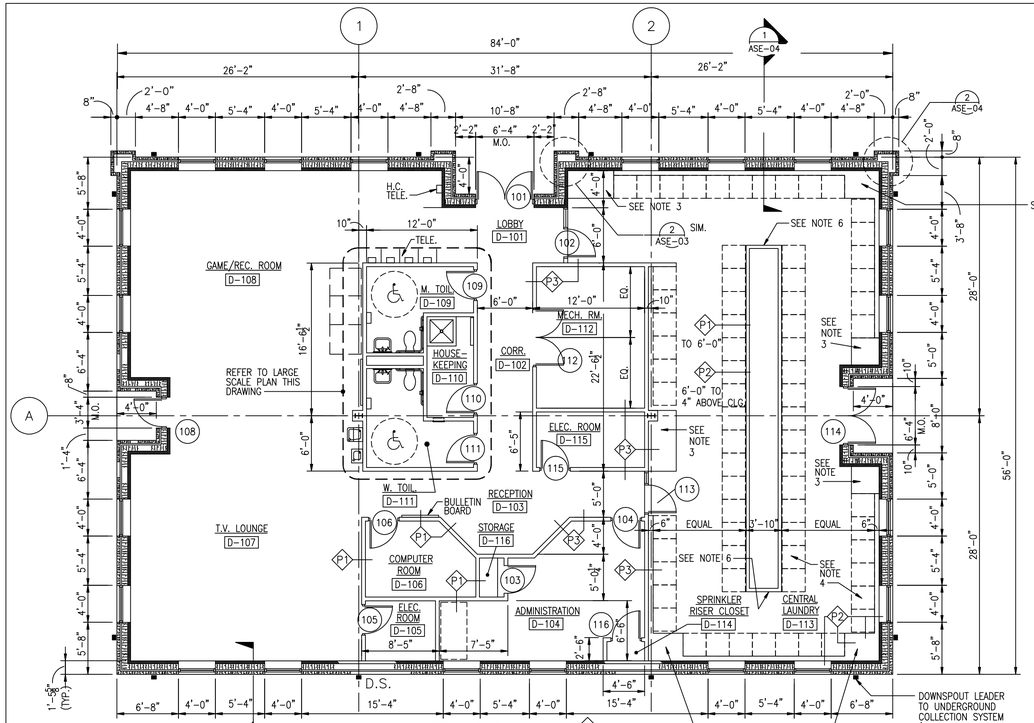

COMMUNITY CENTER FLOOR PLAN

1/8"=1'-0'

NORTH

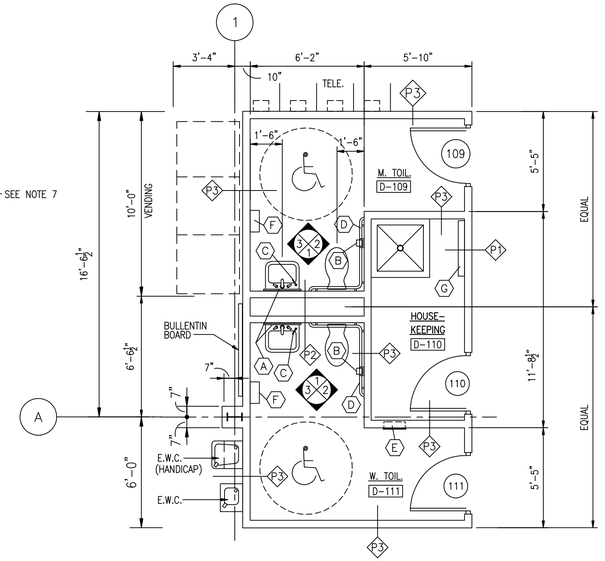

C.C. LARGE SCALE TOILET PLAN

1/4"=1'-0'

NORTH

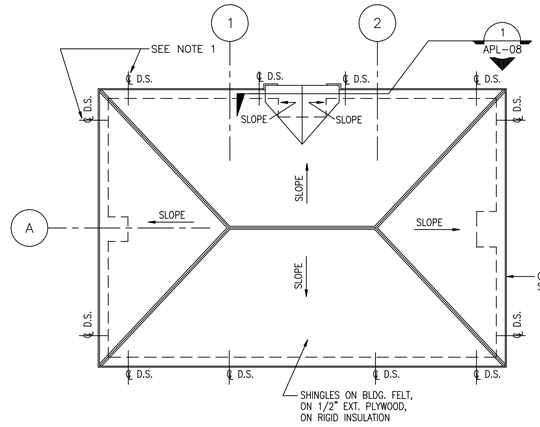

COMMUNITY CENTER ROOF PLAN

1/16"=1'-0'

NORTH

GENERAL NOTES

1. REFER TO BUILDING ELEVATIONS & SECTIONS FOR ADDITIONAL DOWNSPOUT NOTES & DIMENSIONS.
2. ALL INTERIOR TOILET ELEVATIONS ON SHEET AEL–02.
3. COUNTERS FOR FOLDING CLOTHES W/PLASTIC LAMINATE FINISH ON 3/4" PLYWOOD AND FINISHED SURFACE @ 38" A.F.F.
4. FLOOR AREA DESIGN TO ACCOMMODATE 40 WASHERS, (AT PERIMETER OF LAUNDRY) & 30 DRYERS (AT CENTER OF ROOM & BOTH SIDES OF A CENTRAL EXHAUST CHASE.)
5. WALL REINFORCING; PROVIDE 2 #5 BARS IN FULLY GROUTED CELLS, ADJACENT TO ALL WINDOW AND DOOR OPENINGS, AND #5 BARS @ 48" O.C. BETWEEN OPENINGS. MATCH DOWEL LOCATIONS PER STRUCTURAL DWGS.
6. 30"Wx36"H PRIME COATED STEEL FLUSH ACCESS DOOR, MODEL NO. UF–5000 AS MANUFACTURED BY "ACUDOR PRODUCTS INC." MANUFACTURER'S FURNISHING EQUIVALENT MATERIALS ARE ALSO ACCEPTABLE, SUBJECT TO APPROVAL BY CONTRACTOR PRIOR TO BIDDING. INSTALL (BOTTOM OF DOOR @ 12" A.F.F.) PER MANUFACTURERS RECOMMENDATIONS. PROVIDE DOOR WITH CYLINDER LOCKS AND KEY.
7. CORNER CLOSURE, PLASTIC LAMINATE FINISH ON 3/4" PLYWOOD ON 3 5/8" METAL STUD FRAME, FINISHED SURFACE @ 46" A.F.F.

TOILET ACCESSORIES LEGEND

SYMB.	DESCRIPTION	MOUNTING HEIGHT	MODEL No.
A	TILT MIRROR (H/C)	BOT. @ 40"	B–293 1830
B	TOILET PAPER DISPENSER	TOP @ 2'–4"	B–2888
C	SOAP DISPENSER SURFACE MTD.	———	B–8221
D	GRAB BAR	℄ @ 2'–9"	B–68137
E	NAPKIN DISPENSER	TOP @ 4'–2"	B–3500
F	COMB. PAPER TOWEL DISP. & WASTE RECEPTACLE	TOP @ 3'–9"	B–396034
F	S.S. MOP & BROOM HOLDER	TOP @ 6'–0"	B–239x34

TYPICAL – ALL ACCESSORIES HAVE SATIN FINISH

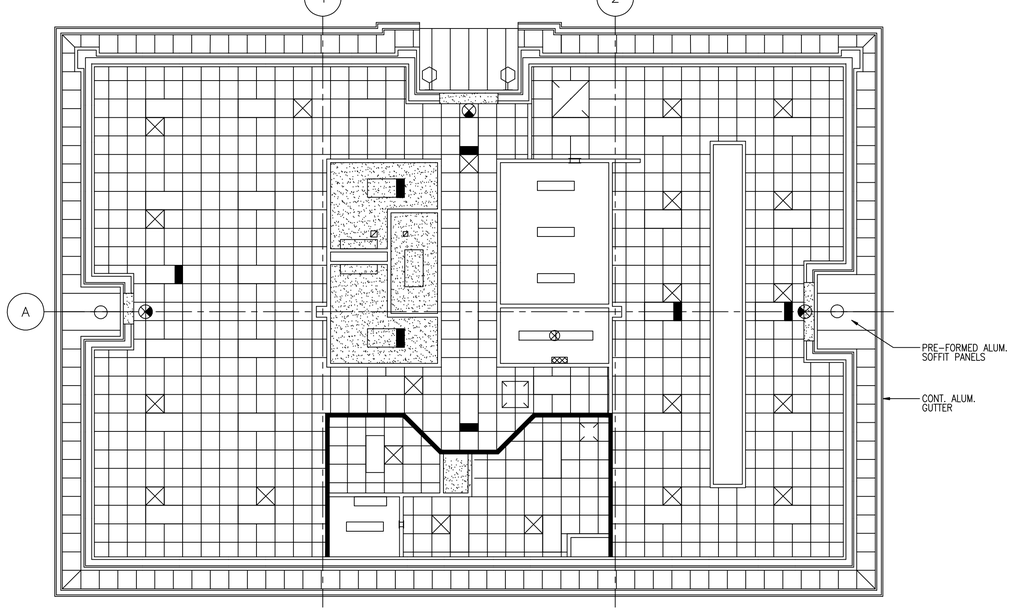

C.C. REFLECTED CEILING PLAN

1/8"=1'-0'

NORTH

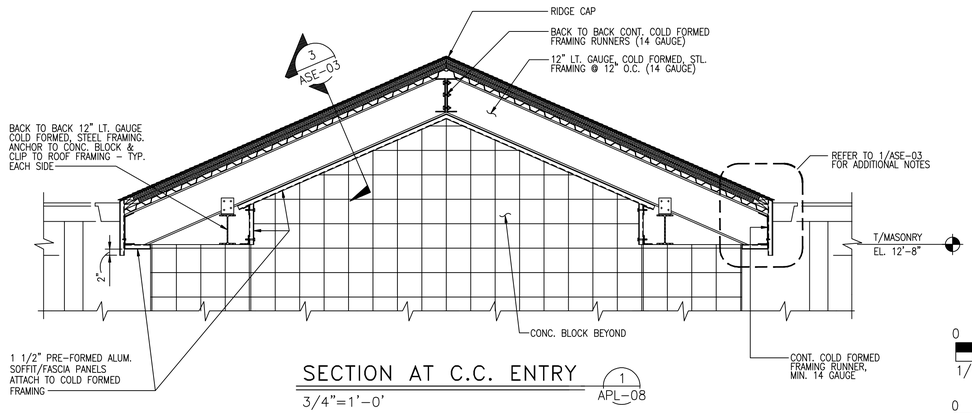

SECTION AT C.C. ENTRY

3/4"=1'-0'

0 4 8 12
1/4"=1'-0"

0 4 8 16 24
1/8"=1'-0"

0 8 16 32 48
1/16"=1'-0"

J.A. JONES OF THE CAROLINAS
LOCKWOOD GREENE Consulting Engineers and Constructors

DSGN	P. BLACKBURN	DR	N. BABB	CHK	AB / DY
SUPV	P.S.S.	LD/DT		CH ENGR	P. BLACKBURN
SUBMITTED BY (PRIN MEMBER-TITLE): V.P.				DATE	03-MAY-1999
TECHNICAL BRANCH					

DRAWING REVISIONS

Rev.	Description	Prep By	Date	Apprvd.
0	FINAL DESIGN SUBMITTAL	NGB	5/3/99	PB/LB
1	ISSUE FOR RECORD	NGB	6/1/01	LB/DT

BEAUFORT, S.C.

MCAS BACHELOR ENLISTED QUARTERS – PHASE IV

ARCHITECTURAL

COMMUNITY CENTER PLANS

APPROVED

DATE EFD, FOR COMMANDER, NAVFAC

Naval Facilities Engineering Command
Southern Division
Charleston, South Carolina

RECORD DRAWING DATE	01-JUN-01
CODE I.D. NO.	80091
DRAWING SIZE:	D
SPEC. NO.	06-98-0690
CONSTRN. CONTR. NO.	N62467-98-D-0690
NAVFAC DRAWING NO.	5364383
SHEET	11 OF 34

APL–08

$$$$ USERNAME $$$$ $$$$ DATE&TIME $$$$ $$$$ DESIGN FILE NAME $$$$

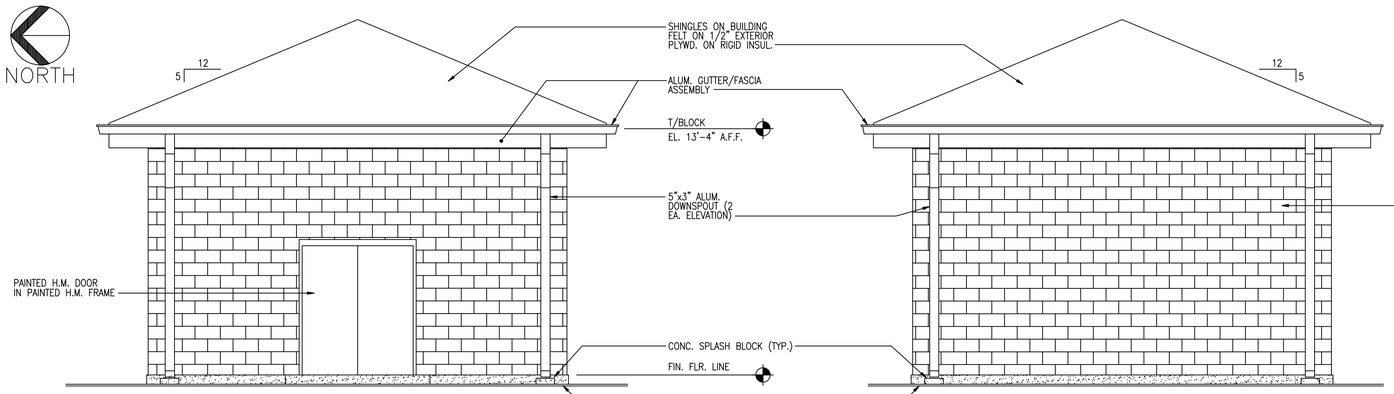

SOUTH ELEVATION

1/4"=1'-0"

EAST ELEVATION

1/4"=1'-0" (WEST ELEV. SIM.)

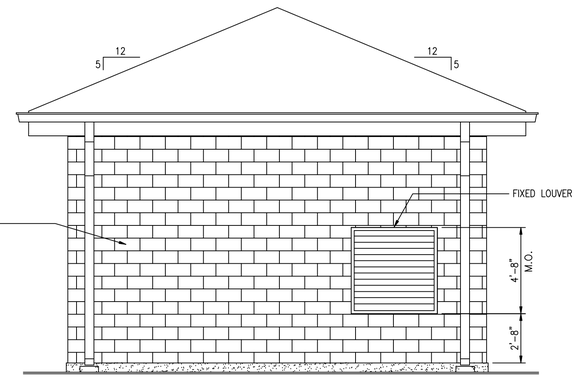

NORTH ELEVATION

1/4"=1'-0"

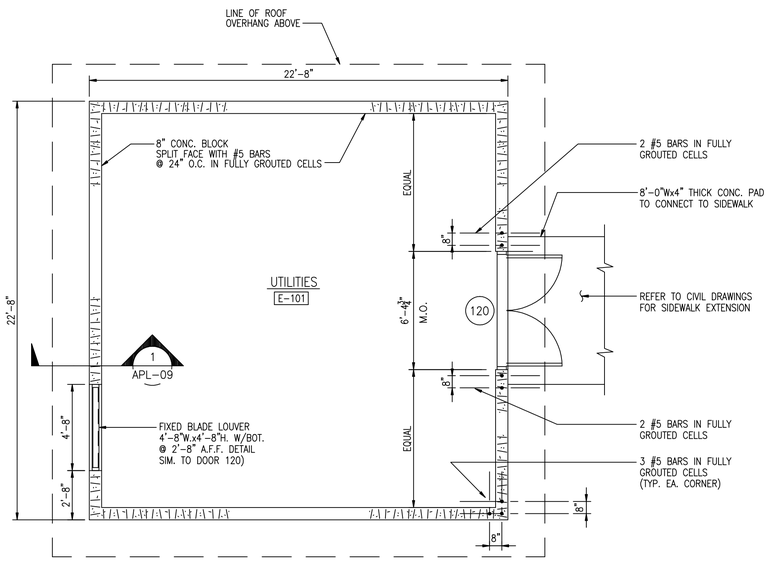

UTILITY BLDG. PLAN

1/4"=1'-0" FIN. FLR. EL. 0'-0"

NOTE: MATCH WALL REINF. WITH DOWEL LOCATIONS PER STRUCTURAL DWGS.

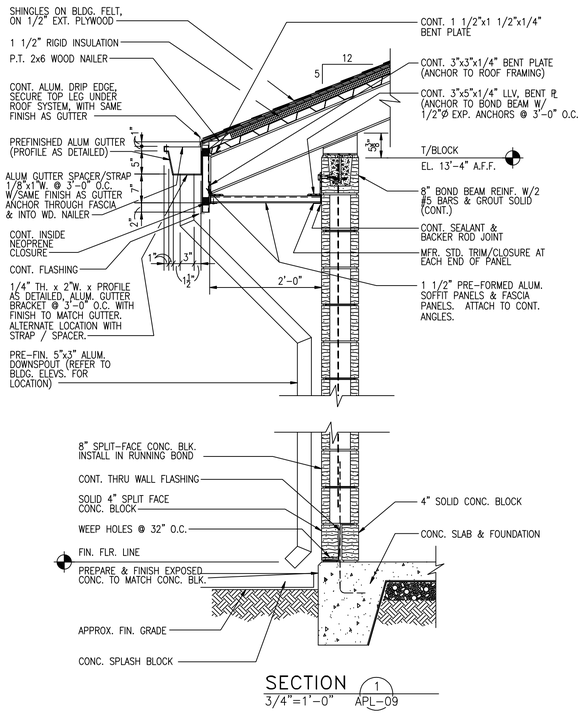

SECTION 1 APL-09

3/4"=1'-0"

0 4 8 12

1/4"=1'-0"

0 1 2 3 4

3/4"=1'-0"

J.A. JONES OF THE CAROLINAS

LOCKWOOD GREENE Consulting Engineers since 1832

DSGN P. BLACKBURN	DR N. BABB	CHK AB / DY
SURV. F.S.S.	CH ENGR P. BLACKBURN	
SUBMITTED BY (PRIN MEMBER TITLE): V.P.		DATE 03-MAY-1999
TECHNICAL BRANCH		

DRAWING REVISIONS

Rev.	Description	Prep By	Date	Apprvd.
0	FINAL DESIGN SUBMITTAL	NGB	5/3/99	PB/LB
1	ISSUE FOR RECORD	NGB	6/1/01	LB/DT

BEAUFORT, S.C.

MCAS

BACHELOR ENLISTED QUARTERS - PHASE IV

ARCHITECTURAL

UTILITY BUILDING PLAN, ELEVATION & SECTION

DATE EFD FOR COMMANDER, NAVFAC

APPROVED

Naval Facilities Engineering Command Southern Division Charleston, South Carolina

RECORD DRAWING DATE 01-JUN-01
CODE I.D. NO. 80091
DRAWING SIZE: D
SPEC. NO.06-98-0690
CONSTRN. CONTR. NO. N62467-98-D-0690
NAVFAC DRAWING NO. 5364384
SHEET 12 OF 34
APL-09

$$$$ USERNAME $$$$ $$$$ DATE&TIME $$$$ $$$$ DESIGN FILE NAME $$$$

NORTH

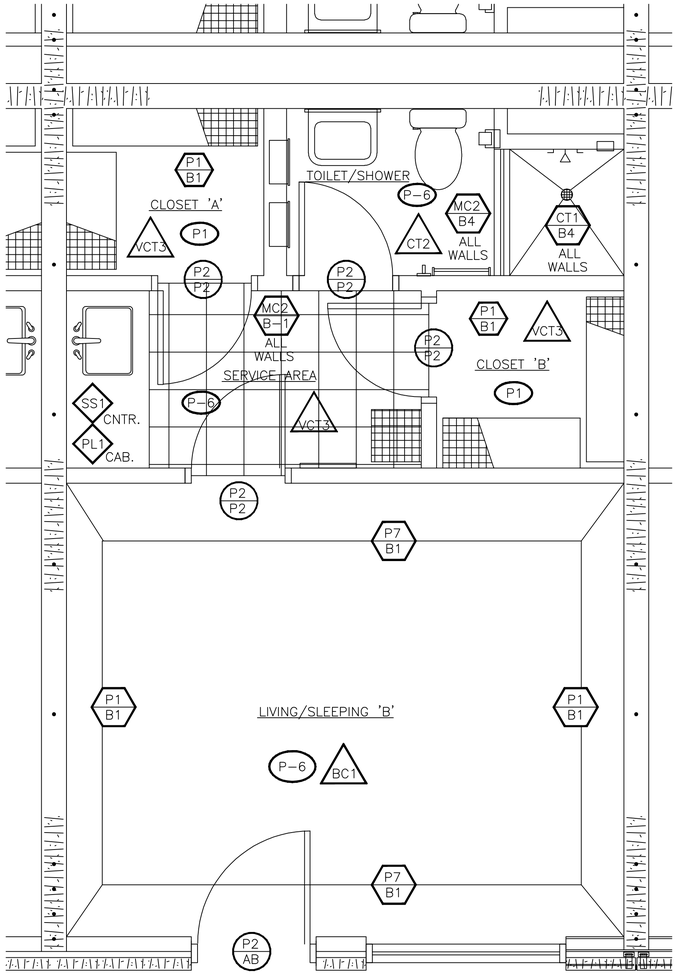

BEQ – OPTION 1 @ "B & C" BUILDINGS

1/2"=1'-0"

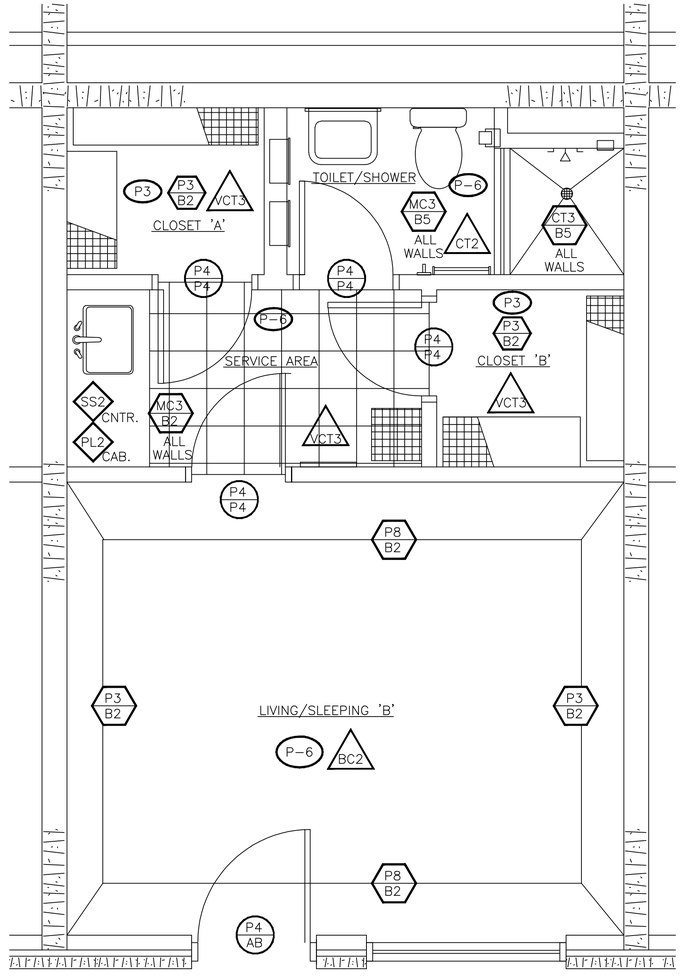

BEQ – OPTION 2 @ "A" BUILDING

1/2"=1'-0"

SYMBOLS LEGEND

BC-1 FLOOR FINISH

AT CEILING FINISH

P-5 / P-6 BASE AND WALL FINISH

P-8 / P-8 FRAME FINISH / DOOR FINISH

PL-1 MILLWORK FINISH

FINISH LEGEND

BROADLOOM
- BC-1 MOHAWK, COLLEGIATE 22/26/28, 405 SPHERE, 28 OZ., 12'-0"w, TUFTED, TEXTURED LOOP ACTIONBAC/BONDLOCK BACKING
- BC-2 TUFTED, TEXTURED LOOP ACTIONBAC/BONDLOCK BACKING
- BC-3 MOHAWK, COLLEGIATE 22/26/28, 405 SPHERE, 28 OZ., 12'-0"w, TUFTED, TEXTURED LOOP ACTIONBAC/BONDLOCK BACKING

VINYL TILE
- VCT-1 ARMSTRONG IMPERIAL TEXTURE, STANDARD EXCELON, COLOR 51946, GENTIAN BLUE, 12"x12"x1/8"
- VCT-2 ARMSTRONG IMPERIAL TEXTURE, STANDARD EXCELON, COLOR 51805, CAMEL BEIGE, 12"x12"x1/8"
- VCT-3 ARMSTRONG IMPERIAL TEXTURE, STANDARD EXCELON, COLOR 51811, ANTIQUE WHITE, 12"x12"x1/8"

CERAMIC TILE
- CT-1 AMERICAN OLEAN, SATINBRITES, Y61 ALMONDINE 2"x2" GLAZED, (WALLS)
- CT-2 AMERICAN OLEAN, A20, BEACH TAN, 2"x2" UNGLAZED (FLOORS)
- CT-3 AMERICAN OLEAN, SATINBRITES, DO6 SATIN MAIZE, 2"x2" GLAZED, (WALLS)
- CT-4 AMERICAN OLEAN, A35, ADOBE, 2"x2" UNGLAZED, (FLOORS)
- CT-5 AMERICAN OLEAN, A27, SAND, 2"x2" UNGLAZED, (FLOORS)

QUARRY TILE
- QT-1 AMERICAN OLEAN, QUARRY NATURALS, N03, DESERT, 6"x6", ABRASIVE

VINYL BASE
- B-1 ROPPE 1/8" VINYL BASE, 784 ALMOND, 4"h
- B-2 ROPPE 1/8" VINYL BASE, 742 SAND, 4"h
- B-3 ARMSTRONG 1/8" VINYL BASE, 74 SHORELINE, 4"h
- B-4 CERAMIC TILE COVE BASE, AMERICAN OLEAN, A20
- B-5 CERAMIC TILE COVE BASE, AMERICAN OLEAN, A35
- B-6 CERAMIC TILE COVE BASE, AMERICAN OLEAN, A27
- B-7 QUARRY TILE COVE BASE, AMERICAN OLEAN, N03, 4"HA35

PLASTIC LAMINATE
- PL-1 FORMICA, DESERT BEIGE, 899-58, MATTE FINISH
- PL-2 FORMICA, CREAM OF WHEAT, 864-58, MATTE FINISH
- PL-3 WILSONART, NEUTRAL GLACE, 4143-60

SOLID SURFACE
- SS-1 FORMICA, SURELL, GINGER ROOT
- SS-2 FORMICA, SURELL, PESTO

PAINT
- P-1 DURON, CW025W, RESTORATIVE (WALLS)
- P-2 DURON, 8222W, DESERT FAWN (INT. DOORS & FRAMES)
- P-3 DURON, CW022W, SOFT GOLD (WALLS)
- P-4 DURON, 8223M, SIENNA SAND (INT. DOORS & FRAMES)
- P-5 DURON, 8233M, CRISP KHAKI (INT. DOORS, FRAMES & WALLS)
- P-6 SPRAYED ON TEXTURED CEILING FINISH, OFF WHITE
- P-7 DURON, 8465D, INDIGO VIOLET (ACCENT WALLS)
- P-8 DURON, 8605D, ENGLISH PINE (ACCENT WALLS)
- EP-1 DURON, 8233M, CRISP KHAKI (EPOXY FINISH)

MULTICOLORED PAINT
- MC-1 NOT USED
- MC-2 ZOLATONE, PRISM COLORS, ZL-00901P, CARD 3/DECK A (WALLS)
- MC-3 ZOLATONE, PRISM COLORS, ZL-00301G, CARD 10/DECK D (WALLS)
- MC-4 NOT USED
- MC-5 NOT USED
- MC-6 ZOLATONE, PRISM COLORS, ZM-70030B, CARD 10/DECK D (WALLS)

MISCELLANEOUS FINISHES
- SC-1 SEALED CONCRETE
- AT ACOUSTICAL TILE
- AB ANODIZED BRONZE (EXT. DOOR & FRAME FINISH)

0 2 4 6

1/2"=1'-0"

LOCKWOOD GREENE
Consulting·Design·Construction
Atlanta, Georgia

DSGN	S RADFORD/ L STORY	DR	L STORY	CHK	S RADFORD
SUPV		CH ENGR			
SUBMITTED BY (FIRM MEMBER-TITLE):				DATE	12-MAR-99
TECHNICAL BRANCH	CORPORATE INTERIORS				
				FPE	

DRAWING REVISIONS

Rev.	Description	Prep By	Date	Approvd.
C	100% DESIGN REVIEW	MGB	5/3/99	PB/LB
1	REVISED	LSTORY	7/12/99	PB/DT
2	REVISED	LSTORY	1/14/00	PB/DT
3	REVISED	RSS	1/18/00	PB/DT
4	ISSUE FOR RECORD	MGB	6/1/01	LB/DT

BEAUFORT, S.C.

MCAS

BACHELOR ENLISTED QUARTERS - PHASE IV

ARCHITECTURAL

ROOM MODULE FINISH PLAN

DATE

APPROVED

EFD FOR COMMANDER, NAVFAC

DATE

Naval Facilities Engineering Command
Southern Division
Charleston, South Carolina

RECORD DRAWING DATE 01-JAN-01

CODE I.D. NO. 80091

DRAWING SIZE: C

SPEC. NO.06-98-0690

CONSTRN. CONTR. NO. N62467-98-D-0690

NAVFAC DRAWING NO.

SHEET OF -

APL-10

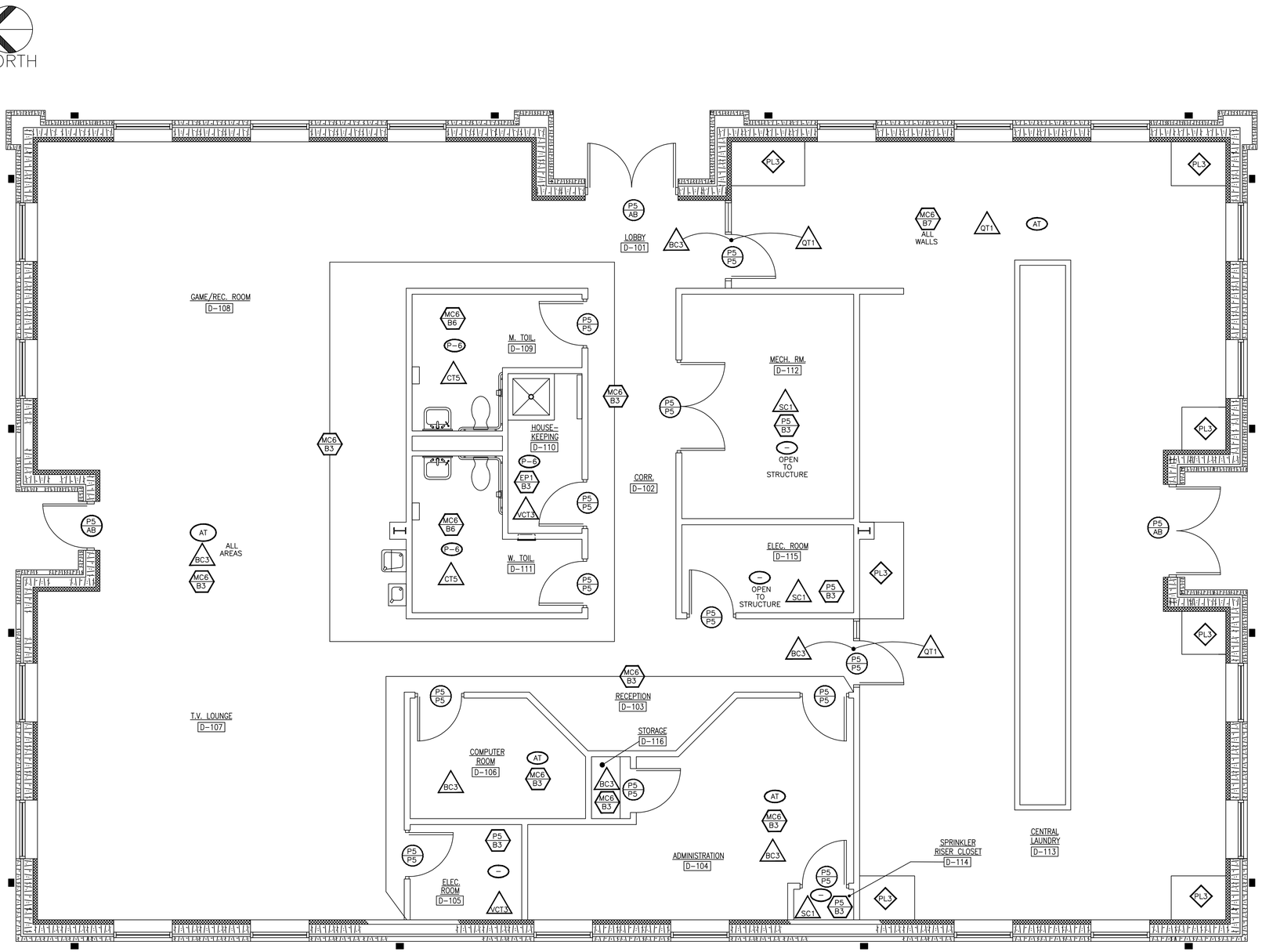

COMMUNITY CENTER

1/4"=1'-0"

SYMBOLS LEGEND

- BC-1 — FLOOR FINISH
- AT — CEILING FINISH
- P-6 / B-3 — BASE AND WALL FINISH
- P-8 / P-8 — FRAME FINISH / DOOR FINISH
- PL-1 — MILLWORK FINISH

FINISH LEGEND

BROADLOOM
- BC-1 MOHAWK, COLLEGIATE 22/26/28, 405 SPHERE, 28 OZ., 12'-0"w, TUFTED, TEXTURED LOOP ACTIONBAC/BONDLOCK BACKING
- BC-2 TUFTED, TEXTURED LOOP ACTIONBAC/BONDLOCK BACKING
- BC-3 MOHAWK, COLLEGIATE 22/26/28, 403 EVERGREEN, 28 OZ., 12'-0"w, TUFTED, TEXTURED LOOP ACTIONBAC/BONDLOCK BACKING

VINYL TILE
- VCT-1 ARMSTRONG IMPERIAL TEXTURE, STANDARD EXCELON, COLOR 51946, GENTIAN BLUE, 12"x12"x1/8"
- VCT-2 ARMSTRONG IMPERIAL TEXTURE, STANDARD EXCELON, COLOR 51805, CAMEL BEIGE, 12"x12"x1/8"
- VCT-3 ARMSTRONG IMPERIAL TEXTURE, STANDARD EXCELON, COLOR 51811, ANTIQUE WHITE, 12"x12"x1/8"

CERAMIC TILE
- CT-1 AMERICAN OLEAN, SATINBRITES, Y61 ALMONDINE 2"x2" GLAZED, (WALLS)
- CT-2 AMERICAN OLEAN, A20, BEACH TAN, 2"x2" UNGLAZED (FLOORS)
- CT-3 AMERICAN OLEAN, SATINBRITES, D06 SATIN MAIZE, 2"x2" GLAZED, (WALLS)
- CT-4 AMERICAN OLEAN, A35, ADOBE, 2"x2" UNGLAZED, (FLOORS)
- CT-5 AMERICAN OLEAN, A27, SAND, 2"x2" UNGLAZED, (FLOORS)

QUARRY TILE
- QT-1 AMERICAN OLEAN, QUARRY NATURALS, N03, DESERT, 6"x6", ABRASIVE

VINYL BASE
- B-1 ROPPE 1/8" VINYL BASE, 784 ALMOND, 4"h
- B-2 ROPPE 1/8" VINYL BASE, 742 SAND, 4"h
- B-3 ARMSTRONG 1/8" VINYL BASE, 74 SHORELINE, 4"h
- B-4 CERAMIC TILE COVE BASE, AMERICAN OLEAN, A20
- B-5 CERAMIC TILE COVE BASE, AMERICAN OLEAN, A35
- B-6 CERAMIC TILE COVE BASE, AMERICAN OLEAN, A27
- B-7 QUARRY TILE COVE BASE, AMERICAN OLEAN, N03, 4"HA35

PLASTIC LAMINATE
- PL-1 FORMICA, DESERT BEIGE, 899-58, MATTE FINISH
- PL-2 FORMICA, CREAM OF WHEAT, 864-58, MATTE FINISH
- PL-3 WILSONART, NEUTRAL GLACE, 4143-60

SOLID SURFACE
- SS-1 FORMICA, SURELL, GINGER ROOT
- SS-2 FORMICA, SURELL, PESTO

PAINT
- P-1 DURON, CW025W, RESTORATIVE (WALLS)
- P-2 DURON, 8222W, DESERT FAWN (INT. DOORS & FRAMES)
- P-3 DURON, CW022W, SOFT GOLD (WALLS)
- P-4 DURON, 8223M, SIENNA SAND (INT. DOORS & FRAMES)
- P-5 DURON, 8233M, CRISP KHAKI (INT. DOORS, FRAMES & WALLS)
- P-6 SPRAYED ON TEXTURED CEILING FINISH, OFF WHITE
- P-7 DURON, 8465D, INDIGO VIOLET (ACCENT WALLS)
- P-8 DURON, 8605D, ENGLISH PINE (ACCENT WALLS)
- EP-1 DURON, 8233M, CRISP KHAKI (EPOXY FINISH)

MULTICOLORED PAINT
- MC-1 NOT USED
- MC-2 ZOLATONE, PRISM COLORS, ZL-00901P, CARD 3/DECK A (WALLS)
- MC-3 ZOLATONE, PRISM COLORS, ZL-00301G, CARD 10/DECK D (WALLS)
- MC-4 NOT USED
- MC-5 NOT USED
- MC-6 ZOLATONE, PRISM COLORS, ZM-70030B, CARD 10/DECK D (WALLS)

MISCELLANEOUS FINISHES
- SC-1 SEALED CONCRETE
- AT ACOUSTICAL TILE
- AB ANODIZED BRONZE (EXT. DOOR & FRAME FINISH)

0 4 8 12
1/4"=1'-0"

LOCKWOOD GREENE
Consulting·Design·Construction
DSGN S RAFORD/ L STORY
DRWN
CHK S RAFORD
SUPV
CH ENGR
SUBMITTED BY (FIRM MEMBER-TITLE): CORPORATE INTERIORS
DATE 12-MAR-99
TECHNICAL BRANCH
FPE

DRAWING REVISIONS

Rev.	Description	Prep By	Date	Apprvd.
C	100% DESIGN REVIEW	MGB	5/3/99	PB/DT
1	REVISED	LSTORY	1/14/00	PB/DT
2	ISSUE FOR RECORD	MGB	6/1/01	LB/DT

MCAS BEAUFORT, S.C.
BACHELOR ENLISTED QUARTERS - PHASE IV
ARCHITECTURAL
COMMUNITY CENTER FINISH PLAN
APPROVED DATE

Naval Facilities Engineering Command
Southern Division
Charleston, South Carolina

EFD FOR COMMANDER, NAVFAC

RECORD DRAWING DATE 01-JUN-01
CODE I.D. NO. 80091
DRAWING SIZE: C
SPEC. NO.06-98-0690
CONSTRN. CONTR. NO. N62467-98-D-0690
NAVFAC DRAWING NO.
SHEET OF -
APL-11

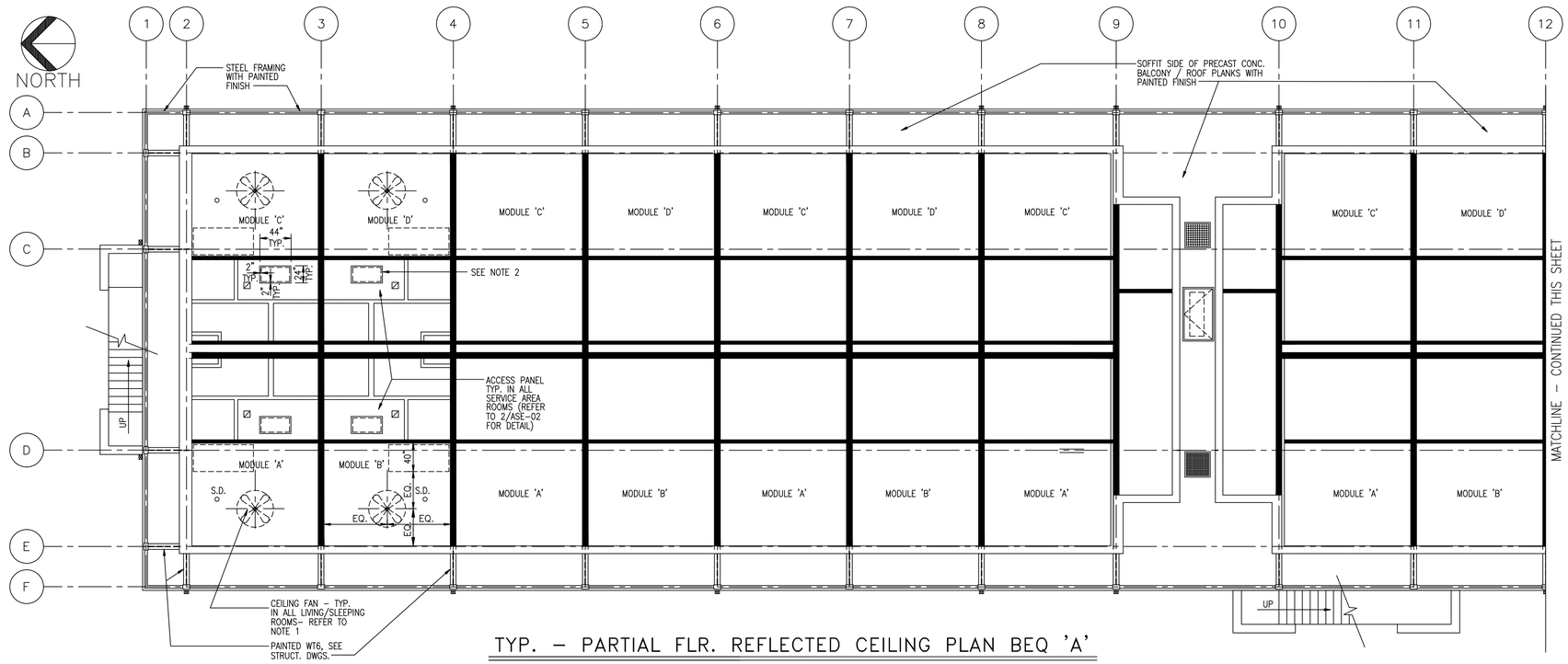

TYP. – PARTIAL FLR. REFLECTED CEILING PLAN BEQ 'A'

1/8"=1'-0'

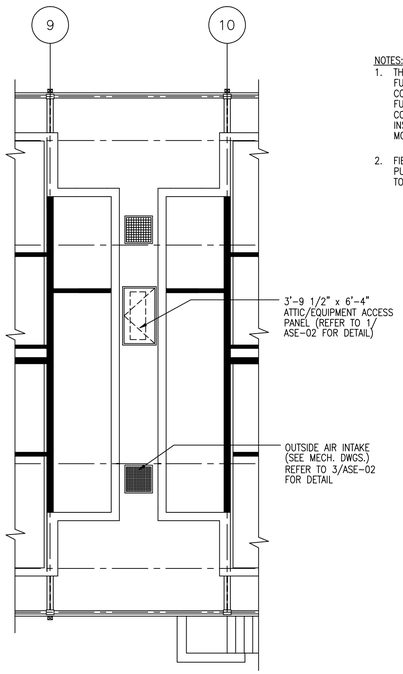

NOTES:

1. THE CEILING FAN LOCATION IS BASED ON THE FURNITURE LAYOUT PROVIDING A "BUNKED" BED CONFIGURATION. CONTRACTOR TO VERIFY FINAL FURNITURE LAYOUT W/THE OWNER. IF BED CONFIGURATION IS OTHER THAN A "BUNKED" INSTALLATION FAN LOCATION WILL HAVE TO BE MODIFIED.
2. FIELD VERIFY ACTUAL INSTALLED LOCATION OF HEAT PUMP AND CONSTRUCT ACCESS PANEL RESPECTIVE TO THE HEAT PUMP CONFIGURATION.

TYP. REFLECTED CEILING PLAN AT BEQ A, B, C THIRD FLOOR BREEZEWAY

1/8"=1'-0'

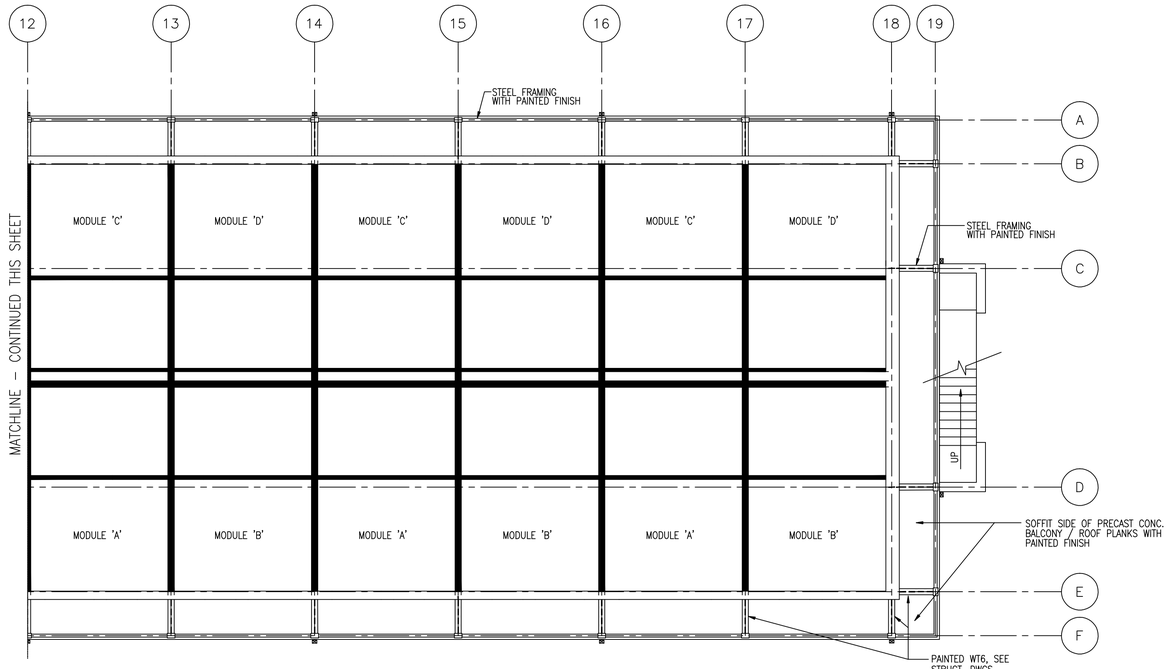

TYP. – PARTIAL FLR. REFLECTED CEILING PLAN BEQ 'A'

1/8"=1'-0'

0 4 8 16 24

1/8"=1'-0"

J.A. JONES
J.A. JONES OF THE CAROLINAS
CONSTRUCTION MANAGEMENT
LOCKWOOD GREENE
Consulting Engineers
DSGN P. BLACKBURN | DR N. BABB | CHK AB / DY
SUPV. F.S.S. | CH ENGR P. BLACKBURN
SUBMITTED BY (FIRM NAME OR TITLE): V.P. | 03-MAY-1999 DATE
TECHNICAL BRANCH
FPE

DRAWING REVISIONS

Rev.	Description	Prep By	Date	Apprvd.
0	FINAL DESIGN SUBMITTAL	NGB	5/3/99	PB/LB
1	REVISED AS NOTED	SM/RM	7/12/99	PB/DT
2	ISSUE FOR RECORD	NGB	6/1/01	LB/DT

MCAS BEAUFORT, S.C.
BACHELOR ENLISTED QUARTERS - PHASE IV
ARCHITECTURAL
TYP. FLOOR REFLECTED CEILING PLAN-90 MODULE BEQ 'A'
APPROVED DATE

Naval Facilities Engineering Command
Southern Division
Charleston, South Carolina

RECORD DRAWING DATE	01-JUN-01
CODE I.D. NO.	80091
DRAWING SIZE:	D
SPEC. NO.	06-98-0690
CONSTRN. CONTR. NO.	N62467-98-D-0690
NAVFAC DRAWING NO.	5364387
SHEET	15 OF 34

ARC-01

EFD FOR COMMANDER, NAVFAC

$$$$ USERNAME $$$$ $$$$ DATE&TIME $$$$ $$$$ DESIGN FILE NAME $$$$

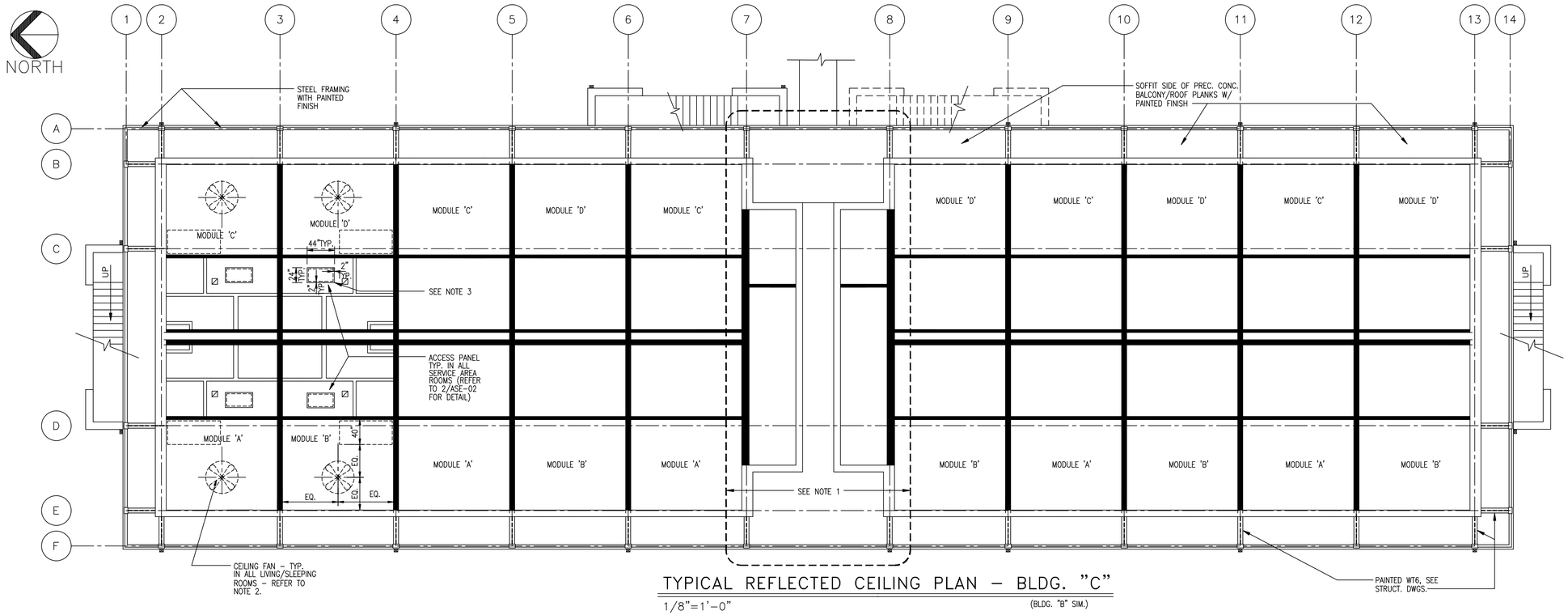

TYPICAL REFLECTED CEILING PLAN – BLDG. "C"

1/8"=1'-0" (BLDG. "B" SIM.)

NOTES

1. REFER TO DWG. ARC-01 FOR REFLECTED CEILING PLAN @ THIRD FLOOR BREEZEWAY – TYP. FOR BEQ 'B' & 'C'
2. THE CEILING FAN LOCATION IS BASED ON THE FURNITURE LAYOUT PROVIDING A "BUNKED" BED CONFIGURATION. CONTRACTOR TO VERIFY FINAL FURNITURE LAYOUT W/THE OWNER. IF BED CONFIGURATION IS OTHER THAN A "BUNKED" INSTALLATION FAN LOCATION WILL HAVE TO BE MODIFIED.
3. FIELD VERIFY ACTUAL INSTALLED LOCATION OF HEAT PUMP AND CONSTRUCT ACCESS PANEL RESPECTIVE TO THE HEAT PUMP CONFIGURATION.

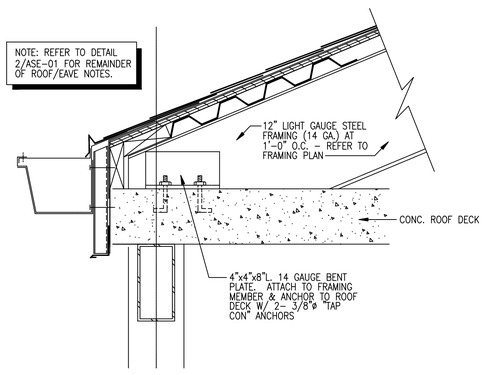

DETAIL 1
1 1/2"=1'-0" ARC-02

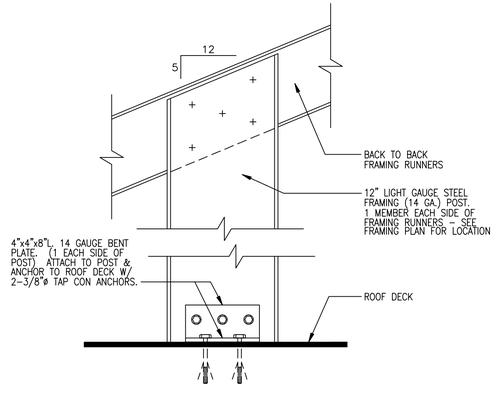

DETAIL 2
1 1/2"=1'-0" ARC-02

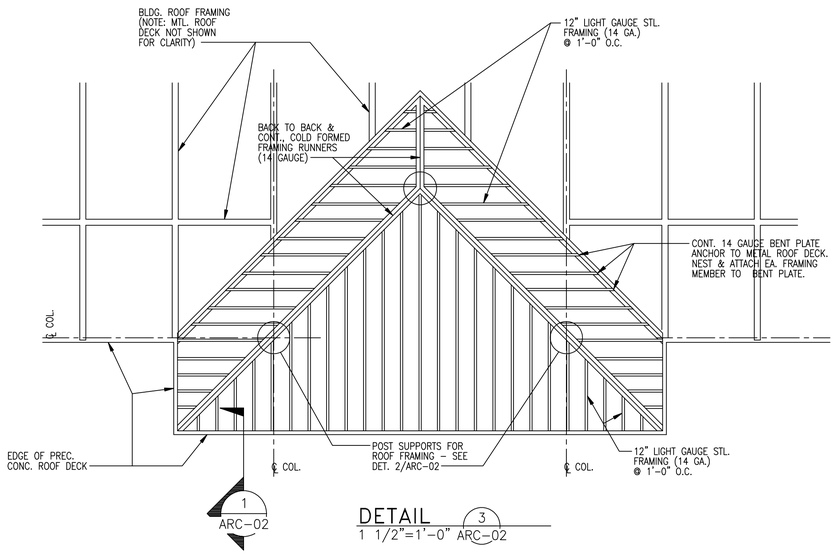

DETAIL 3
1 1/2"=1'-0" ARC-02

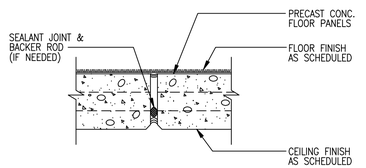

TYP. FLOOR/CEILING JOINT
DETAIL 4
1 1/2"=1'-0" ARC-02

0 4 8 16 24
1/8"=1'-0"

J.A. JONES
J.A. JONES OF THE CAROLINAS
LOCKWOOD GREENE
Consulting Engineers and Constructors

DSGN	P. BLACKBURN	DR	N. BABB	CHK AB / DY
SUPV	F.S.S.	SUBMITTED BY (FIRM MEMBER, TITLE)		CH ENGR P. BLACKBURN
TECHNICAL BRANCH				DATE 03-MAY-1999

FPE

DRAWING REVISIONS

Rev.	Description	Prep By	Date	Apprvd.
0	FINAL DESIGN SUBMITTAL	NGB	5/3/99	PB/LB
1	REVISED AS NOTED	SM/PM	7/12/99	PB/DT
2	ISSUE FOR RECORD	NGB	6/1/01	LB/DT

BEAUFORT, S.C.

MCAS

BACHELOR ENLISTED QUARTERS – PHASE IV

ARCHITECTURAL

TYP. FLOOR REFLECTED CEILING PLAN–60 MODULE BEQ 'C'

DATE

APPROVED

EFD FOR COMMANDER, NAVFAC

Naval Facilities Engineering Command
Southern Division
Charleston, South Carolina

RECORD DRAWING DATE	01-JUN-01
CODE I.D. NO.	80091
DRAWING SIZE:	D
SPEC. NO.	06-98-0690
CONSTRN. CONTR. NO.	N62467-98-D-0690
NAVFAC DRAWING NO.	5364388
SHEET	16 OF 34

ARC-02

$$$$ USERNAME $$$$ $$$$ DATE&TIME $$$$ $$$$ DESIGN FILE NAME $$$$

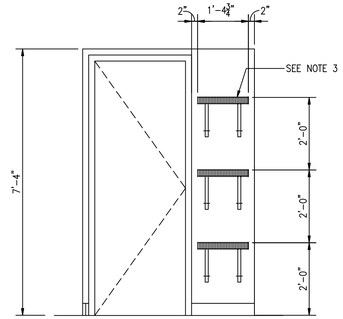

ELEVATION 1 APL-07
1/2"=1'-0" AEL-01

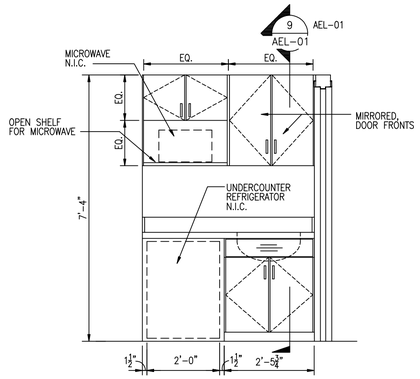

ELEVATION 2 APL-07
1/2"=1'-0" AEL-01

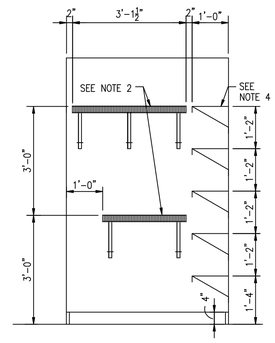

ELEVATION 3 APL-07
1/2"=1'-0" AEL-01

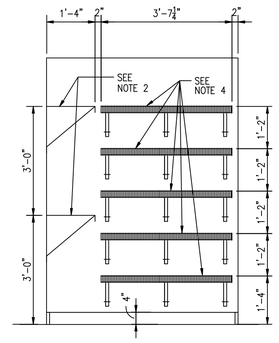

ELEVATION 4 APL-07
1/2"=1'-0" AEL-01

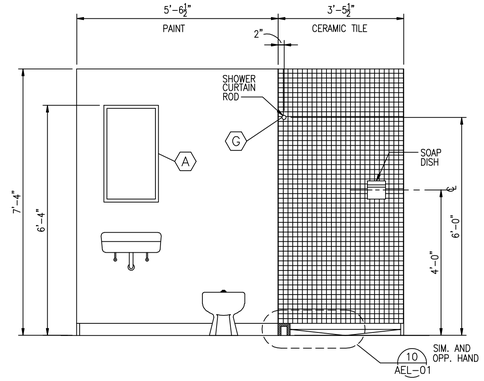

ELEVATION 5 APL-07
1/2"=1'-0" AEL-01

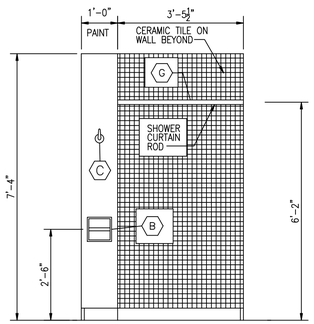

ELEVATION 6 APL-07
1/2"=1'-0" AEL-01

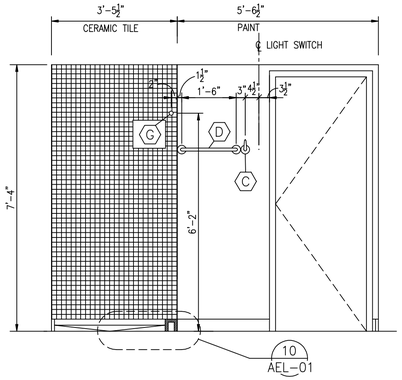

ELEVATION 7 APL-07
1/2"=1'-0" AEL-01

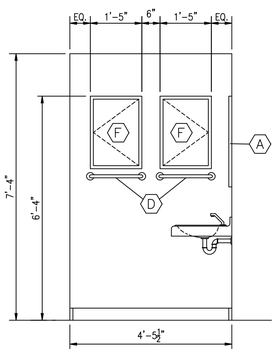

ELEVATION 8 APL-07
1/2"=1'-0" AEL-01

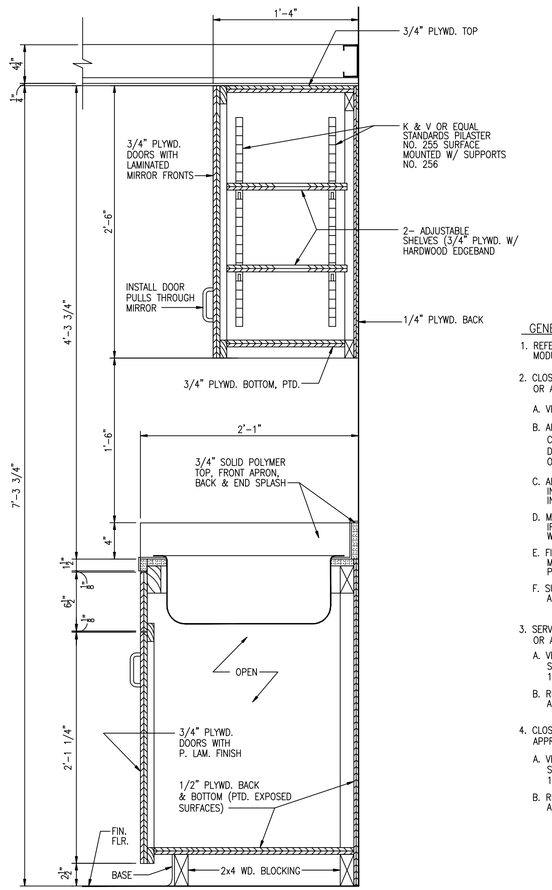

TYP. BASE & OVERHEAD CABINET
DETAIL 9 AEL-01
1 1/2"=1'-0" AEL-01

GENERAL NOTES:

1. REFER TO DWG. APL-07 FOR SLEEPING MODULE TOILET ACCESSORIES LEGEND
2. CLOSET SHELF & ROD SYSTEM, BY "LEE ROWAN COMPANY" OR APPROVED EQUIVALENT.
   A. VENTILATED WIRE SHELF & ROD TO BE 16" DEEP.
   B. ALLVENTILATED WIRE STORAGE SHELVING SHALL BE CONSTRUCTED OF GRADE C-1008 BRIGHT, BASIC, COLD-DRAWN STEEL WIRE WITH AVERAGE TENSILE STRENGTH OF 100,000 psi.
   C. ALL STEEL WIRE SHALL BE RESISTANCE WELDED AT INTERSECTIONS OF CROSS DECK WIRES SPACED AT 1" INCREMENTS AND TRIMMED SMOOTH.
   D. MATERIAL SHALL BE CLEANED AND COVERED WITH AN IRON PHOSPHATE COATING TO ENSURE PROPER BOND WITH FINISH COAT.
   E. FINISH COAT SHALL CONSIST OF AN CONTINUOUS 3-5 MILL EPOXY-POLYESTER HYBRID POWDER COATING TO PROVIDE A HARD, SMOOTH, DURABLE FINISH.
   F. SUPPORT SHELVING W/MANUFACTURER'S STD. HARDWARE AND INSTALL PER MANUFACTURER'S SPECIFICATIONS.
3. SERVICE AREA SHELF SYSTEM, BY "LEE ROWAN COMPANY" OR APPROVED EQUIVALENT.
   A. VENTILATED WIRE SHELVING UNIT TO BE "TIGHTMESH" STYLE W/ 1/2" DECK SPACING AND SHELVING TO BE 16" DEEP.
   B. REFER TO NOTE 2 PARAGRAPH B., D. & E. FOR MATERIAL AND FINISH NOTES, & PARAGRAPH F. FOR HARDWARE.
4. CLOSET SHELF SYSTEM, BY "LEE ROWAN COMPANY" OR APPROVED EQUIVALENT.
   A. VENTILATED WIRE SHELVING UNIT TO BE "TIGHTMESH" STYLE W/ 1/2" DECK SPACING AND SHELVING TO BE 12" DEEP.
   B. REFER TO NOTE 2 PARAGRAPH B., D. & E. FOR MATERIAL AND FINISH NOTES, & PARAGRAPH F. FOR HARDWARE.

PARTITION TYPES

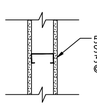

P-1
N.T.S.

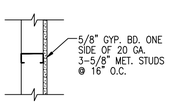

P-2
N.T.S.

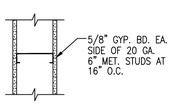

P-5
N.T.S.

P-3
N.T.S.

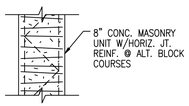

P-4
N.T.S.

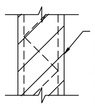

P-6
N.T.S.

8" CONC. MASONRY UNIT W/HORIZ. JT. REINF. @ ALT. BLOCK COURSES. BEARING OR NON BEARING CONCRETE MASONRY WALLS TO PROVIDE A FIRE RESISTANCE RATING OF ONE HOUR PER THE "STANDARD BUILDING CODE" (1997 EDITION) TABLE 709.3.1. THE EQUIVALENT THICKNESS TO BE DETERMINED PER ASTM C140.

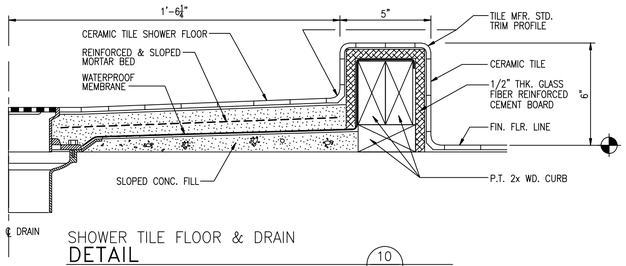

SHOWER TILE FLOOR & DRAIN
DETAIL 10 AEL-01
3"=1'-0" AEL-01

J.A. JONES
J.A. JONES MANAGEMENT SERVICES
LOCKWOOD GREENE
Consulting-Design-Construction

DSGN	P. BLACKBURN
DR	N. BABB
CHK	AB / DY
SUPV	F.S.S.
CH ENGR	P. BLACKBURN
SUBMITTED BY (FIRM MEMBER-DULE)	V.P. 03-MAY-1999 DATE
TECHNICAL BRANCH	
FPE	

DRAWING REVISIONS

Rev.	Description	Prep. By	Date	Apprvd.
0	FINAL DESIGN SUBMITTAL	NCB	5/1/98	PB/LB
1	REVISED AS NOTED	SM	7/12/99	PB/DT
2	REVISED AS NOTED	PAB	10/28/99	PB/DT
3	ISSUE FOR RECORD	NCB	6/1/01	LB/DT

BEAUFORT, S.C.
ENLISTED QUARTERS - PHASE IV
ARCHITECTURAL
INTERIOR ELEVATIONS - BEQ

DATE ETD FOR COMMANDER, NAVFAC

MCAS BACHELOR ENLISTED QUARTERS APPROVED DATE

Naval Facilities Engineering Command
Southern Division
Charleston, South Carolina

RECORD DRAWING DATE	01-JUN-01
CODE I.D. NO.	80091
DRAWING SIZE:	D
SPEC. NO.	06-98-0690
CONSTRN. CONTR. NO.	N62467-98-D-0690
NAVFAC DRAWING NO.	5364389
SHEET 17 OF 34	
	AEL-01

0 2 4 6
1/2"=1'-0"

0 1 2
1 1/2"=1'-0"

$$$$ USERNAME $$$$ $$$$ DATE&TIME $$$$ $$$$ DESIGN FILE NAME $$$$

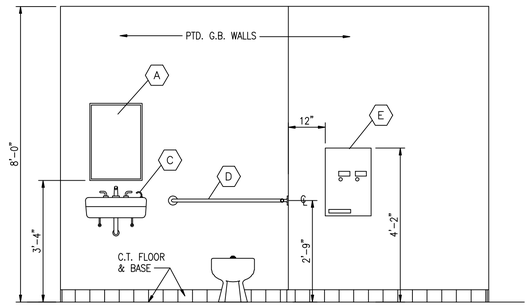

ELEVATION (1) APL-08
1/2"=1'-0" AEL-02

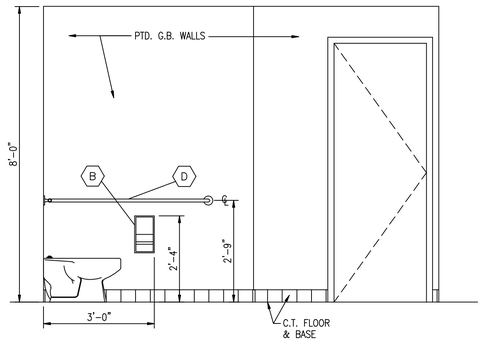

ELEVATION (2) APL-08
1/2"=1'-0" AEL-02

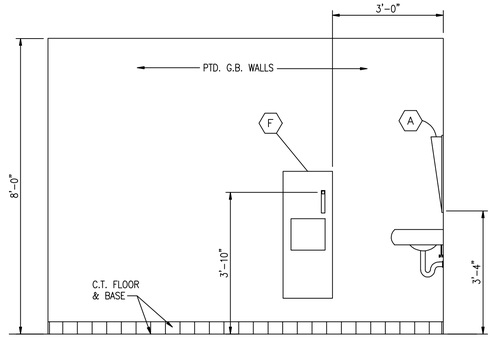

ELEVATION (3) APL-08
1/2"=1'-0" AEL-02

NOTE:

1. ELEVATION DRAWN AT WOMEN'S TOILET W/MEN'S TOILET ELEV. SIMILAR TO W/OUT TOILET ACCESSORY (E)
2. REFER TO DWG. APL-08 FOR COMMUNITY CENTER TOILET ACCESSORIES LEGEND

0 2 4 6
1/2"=1'-0"

J.A. JONES
J.A. JONES OF THE CAROLINAS
LOCKWOOD GREENE
Consulting Engineers and Constructors

DSGN	P. BLACKBURN	DR	N. BABB
SUPV	F.S.S.	CH ENGR	P. BLACKBURN
SUBMITTED BY (FIRM MEMBER, TITLE):			
TECHNICAL BRANCH			
FPE			

DRAWING REVISIONS

Rev.	Description	Prep By	Date	Apprvd.
0	FINAL DESIGN SUBMITTAL	NGB	5/3/99	PB/LB
1	ISSUE FOR RECORD	NGB	6/1/01	LB/DT

BEAUFORT, S.C.

BACHELOR ENLISTED QUARTERS - PHASE IV

ARCHITECTURAL

INTERIOR ELEVATIONS - COMMUNITY CENTER

DATE

EFD FOR COMMANDER, NAVFAC

MCAS

APPROVED

Naval Facilities Engineering Command
Southern Division
Charleston, South Carolina

RECORD DRAWING DATE
01-JUN-01

CODE I.D. NO. 80091

DRAWING SIZE: D

SPEC. NO.06-98-0690

CONSTRN. CONTR. NO.
N62467-98-D-0690

NAVFAC DRAWING NO.
5364390

SHEET 18 OF 34

AEL-02

$$$$ USERNAME $$$$ $$$$ DATE&TIME $$$$ $$$$ DESIGN FILE NAME $$$$

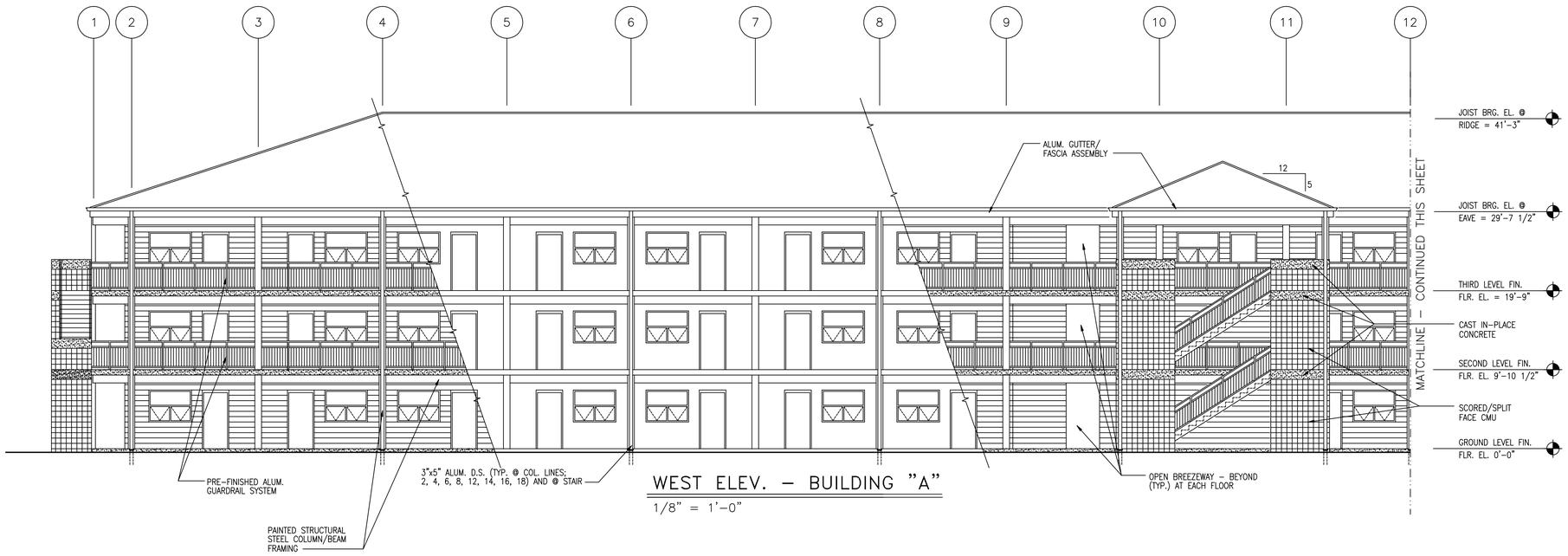

WEST ELEV. – BUILDING "A"

1/8" = 1'-0"

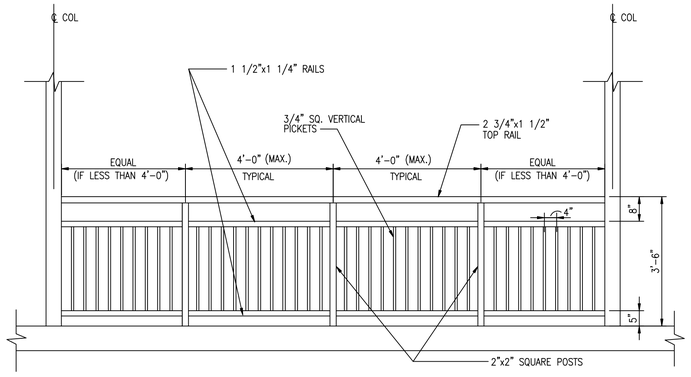

TYPICAL HANDRAIL ELEVATION

1/2"=1'-0"

NOTE:

EXTEND POSTS THROUGH SLAB CONSTRUCTION AND ANCHOR TO STEEL BEAM PER MANUFACTURERS RECOMMENDATIONS. ANCHOR RAILS TO STEEL COLUMNS PER MANUFACTURERS RECOMMENDATIONS.

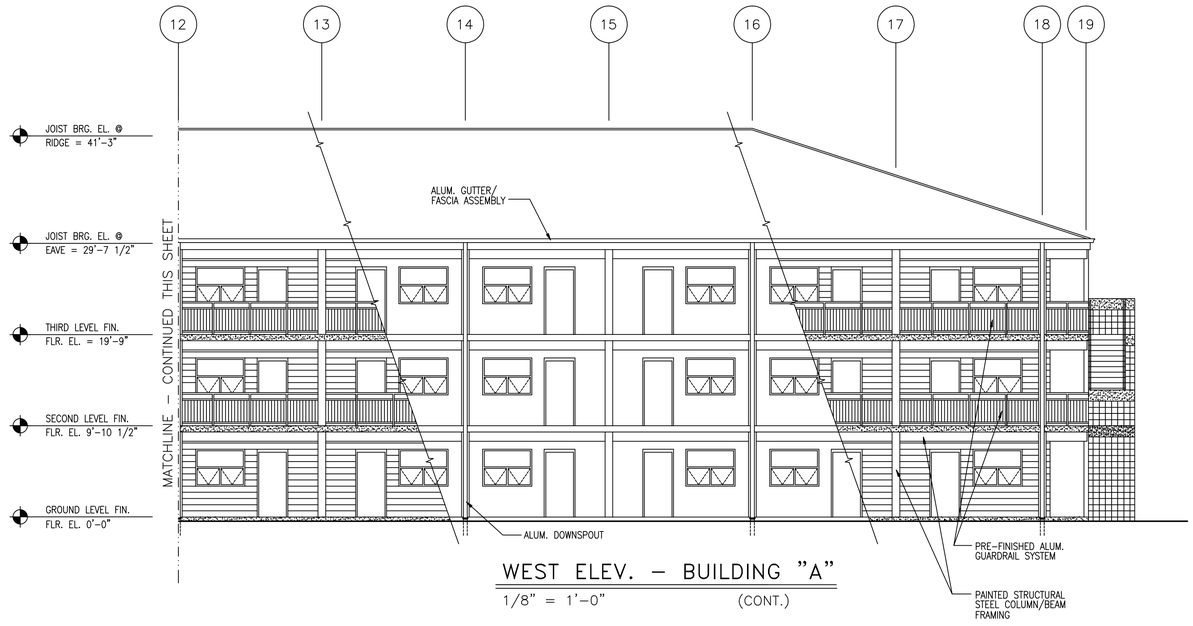

WEST ELEV. – BUILDING "A"

1/8" = 1'-0" (CONT.)

0 2 4 6
1/2"=1'-0"

0 4 8 16 24
1/8"=1'-0"

J.A. JONES MANAGEMENT SERVICES
J.A. JONES OF THE CAROLINAS
LOCKWOOD GREENE Consulting Design Construction

DSGN P. BLACKBURN	DR N. BABB	CHK AB / DY	
SUPV F.S.S.	CH ENGR P. BLACKBURN		
SUBMITTED BY (FIRM MEMBER-TITLE): Roger Sprouse, V.P.		03-MAY-1999	DATE
TECHNICAL BRANCH			
FPE			

DRAWING REVISIONS

Rev.	Description	Prep By	Date	Apprvd.
0	FINAL DESIGN SUBMITTAL	NGB	5/3/99	PB/LB
1	REVISED AS NOTED	SM/RW	7/12/99	PB/DT
2	ISSUE FOR RECORD	NGB	6/1/01	LB/DT

MCAS BEAUFORT, S.C.

BACHELOR ENLISTED QUARTERS – PHASE IV

ARCHITECTURAL

WEST ELEVATION @ 90 MODULE – BEQ "A"

APPROVED DATE

EFD FOR COMMANDER, NAVFAC

Naval Facilities Engineering Command
Southern Division
Charleston, South Carolina

RECORD DRAWING DATE 01-JUN-01
CODE I.D. NO. 80091
DRAWING SIZE: D
SPEC. NO.06-98-0690
CONSTRN. CONTR. NO. N62467-98-D-0690
NAVFAC DRAWING NO. 5364391
SHEET 19 OF 34
AEL-03

$$$$ USERNAME $$$$ $$$$ DATE&TIME $$$$ $$$$ DESIGN FILE NAME $$$$

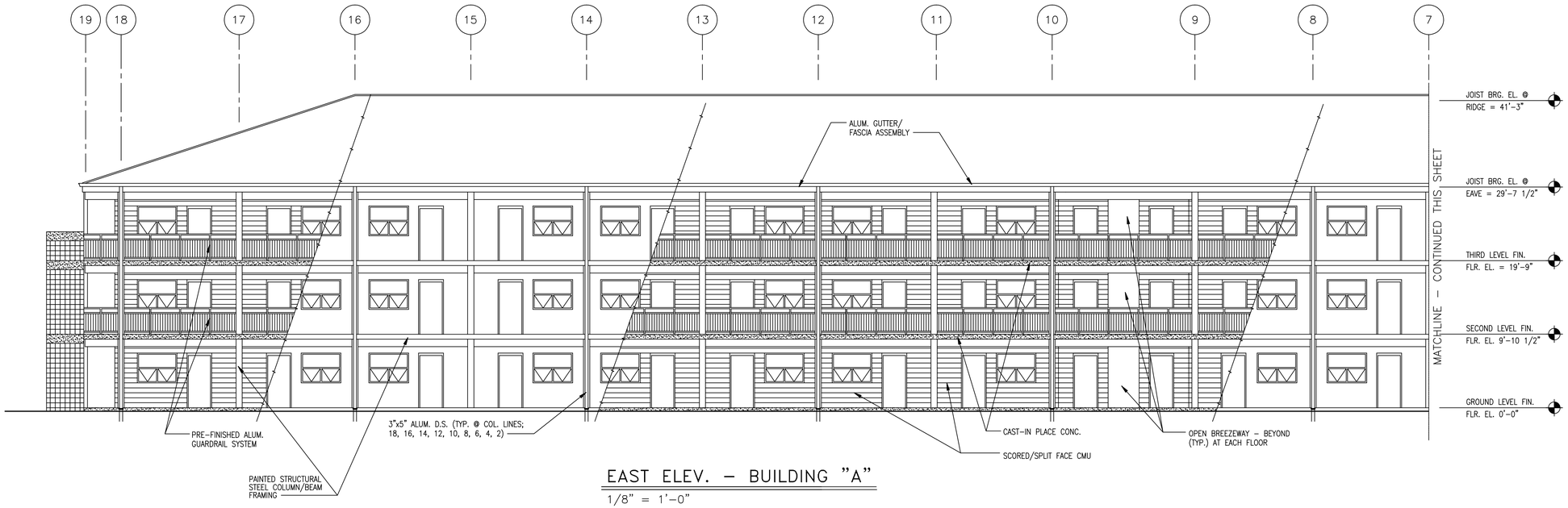

EAST ELEV. - BUILDING "A"

1/8" = 1'-0"

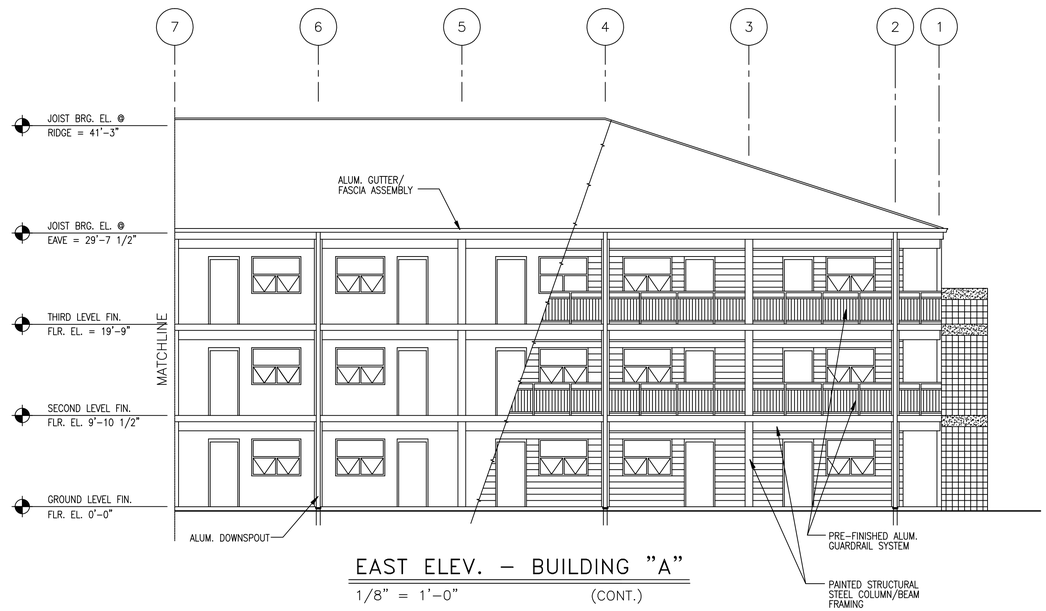

EAST ELEV. - BUILDING "A" (CONT.)

1/8" = 1'-0"

0 4 8 16 24

1/8"=1'-0"

J.A. JONES OF THE CAROLINAS

LOCKWOOD GREENE Consulting Engineers

DSGN P. BLACKBURN DR N. BABB CHK AB / DY

SURV F.S.S. CH ENGR P. BLACKBURN

SUBMITTED BY (FIRM NAME/TITLE): V.P. 03-MAY-1999

TECHNICAL BRANCH FPE

DRAWING REVISIONS

Rev.	Description	Prep By	Date	Apprvd.
0	FINAL DESIGN SUBMITTAL	NGB	5/3/99	PB/LB
1	REVISED AS NOTED	SM/PM	7/12/99	PB/DT
2	ISSUE FOR RECORD	NGB	6/1/01	LB/DT

BEAUFORT, S.C.

BACHELOR ENLISTED QUARTERS - PHASE IV

ARCHITECTURAL

EAST ELEVATION @ 90 MODULE - BEQ "A"

DATE EFD FOR COMMANDER, NAVFAC

APPROVED

MCAS

Naval Facilities Engineering Command

Southern Division

Charleston, South Carolina

RECORD DRAWING DATE	01-JAN-01
CODE I.D. NO.	80091
DRAWING SIZE:	D
SPEC. NO.	06-98-0690
CONSTRN. CONTR. NO.	N62467-98-D-0690
NAVFAC DRAWING NO.	5364392
SHEET 20 OF 34	
AEL-04	

$$$$ USERNAME $$$$ $$$$ DATE&TIME $$$$ $$$$ DESIGN FILE NAME $$$$

EAST ELEV. – BLDG. "C"

1/8" = 1'-0" (BLDG. "B" SIM.)

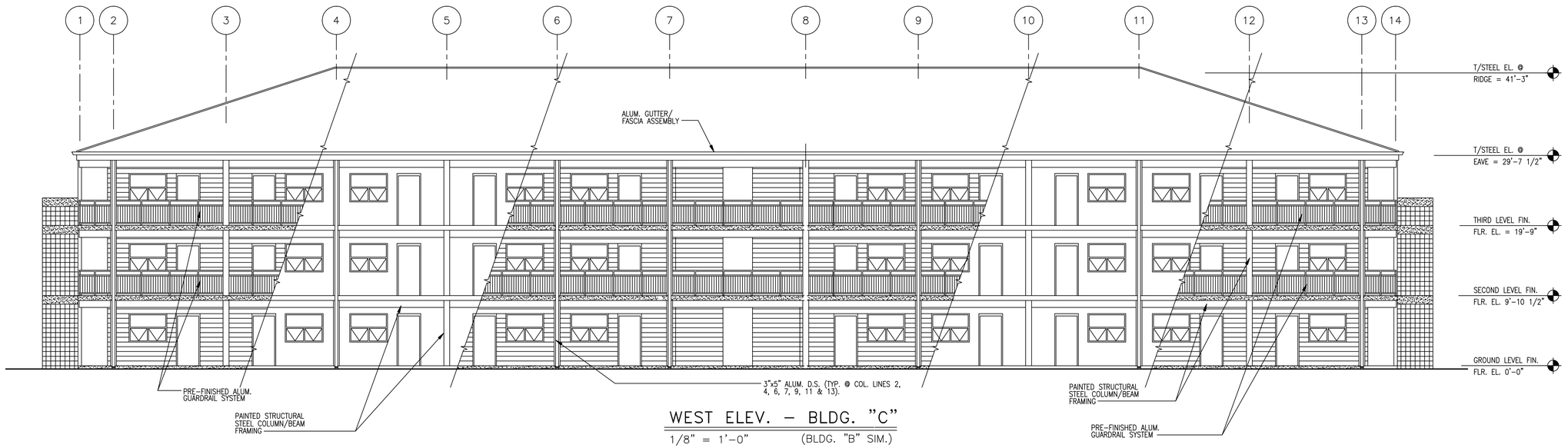

WEST ELEV. – BLDG. "C"

1/8" = 1'-0" (BLDG. "B" SIM.)

0 4 8 16 24

1/8"=1'-0"

J.A. JONES MANAGEMENT SERVICES

J.A. JONES OF THE CAROLINAS

LOCKWOOD GREENE Consulting·Design·Construction

DSGN P. BLACKBURN DR N. BABB CHK AB / DY

SUPV F.S.S. CH ENGR P. BLACKBURN

SUBMITTED BY (FIRM MEMBER-TITLE): Engr Stroud V.P. 03-MAY-1999 DATE

TECHNICAL BRANCH

FPE

DRAWING REVISIONS

Rev.	Description	Prep By	Date	Apprvd.
0	FINAL DESIGN REVIEW	NGB	5/3/99	PB/LB
1	REVISED AS NOTED	SM/RW	7/12/99	PB/DT
2	ISSUE FOR RECORD	NGB	6/1/01	LB/DT

MCAS BEAUFORT, S.C.

BACHELOR ENLISTED QUARTERS – PHASE IV

ARCHITECTURAL

EAST & WEST ELEVATION @ 60 MODULE – BEQ 'C'

APPROVED DATE EFD FOR COMMANDER, NAVFAC

Naval Facilities Engineering Command

Southern Division

Charleston, South Carolina

RECORD DRAWING DATE 01-JUN-01

CODE I.D. NO. 80091

DRAWING SIZE: D

SPEC. NO.06-98-0690

CONSTRN. CONTR. NO. N62467-98-D-0690

NAVFAC DRAWING NO. 5364393

SHEET 21 OF 34

AEL-05

$$$$ USERNAME $$$$ $$$$ DATE&TIME $$$$ $$$$ DESIGN FILE NAME $$$$

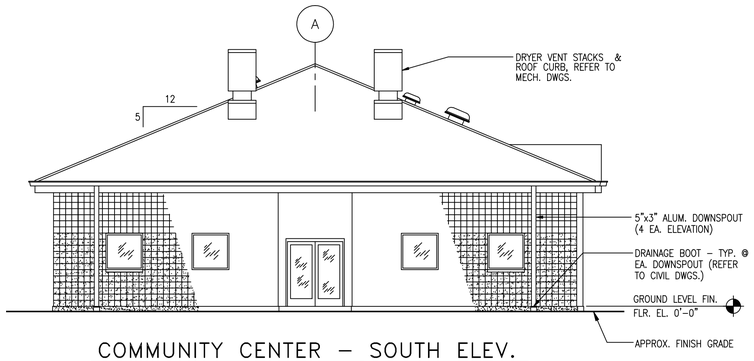

COMMUNITY CENTER – SOUTH ELEV.

1/8" = 1'–0" (LOOKING NORTH)

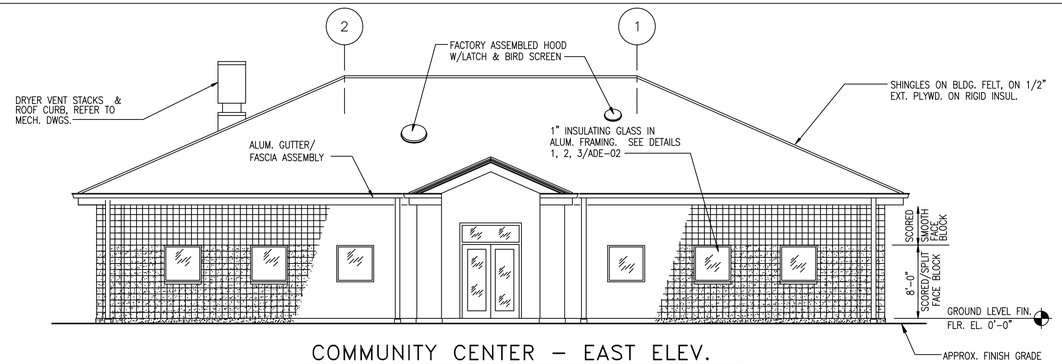

COMMUNITY CENTER – EAST ELEV.

1/8" = 1'–0" (LOOKING WEST)

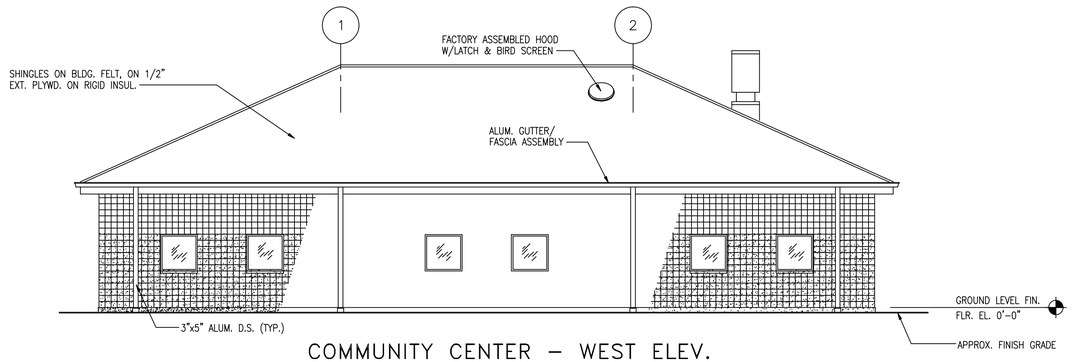

COMMUNITY CENTER – WEST ELEV.

1/8" = 1'–0" (LOOKING EAST)

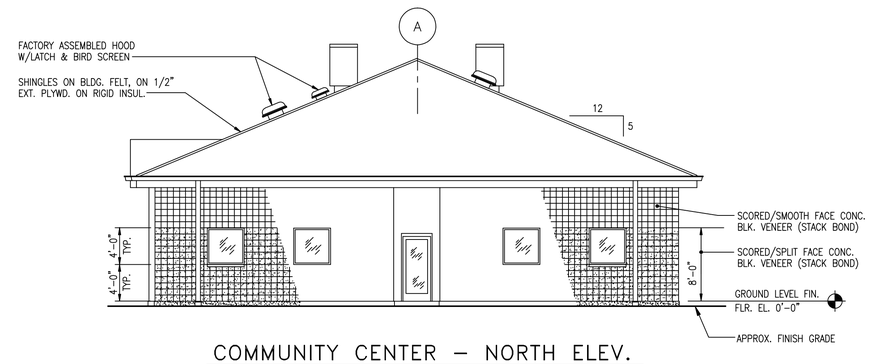

COMMUNITY CENTER – NORTH ELEV.

1/8" = 1'–0" (LOOKING SOUTH)

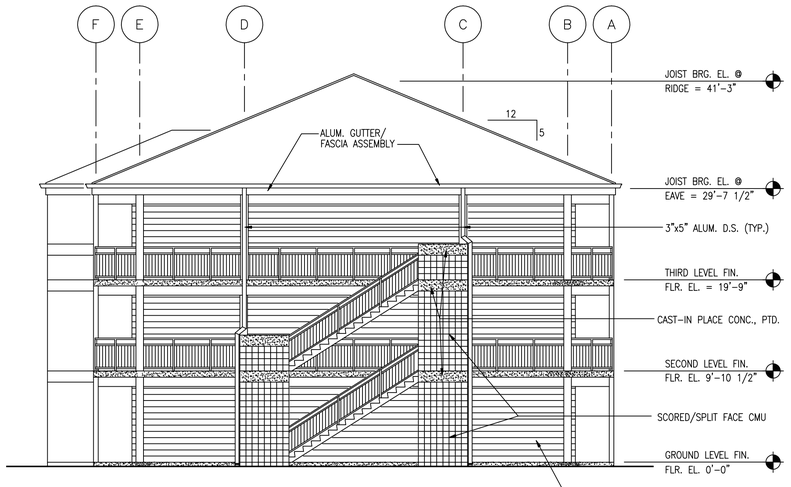

SOUTH ELEV. @ BEQ 'A and NORTH ELEV. @ BEQ 'B' & 'C'

1/8" = 1'–0"

NOTE: NORTH ELEV. AT BEQ 'A' SIM TO OPP. HAND.
SOUTH ELEV. @ BEQ 'B' & 'C' SIM. TO OPP. HAND.

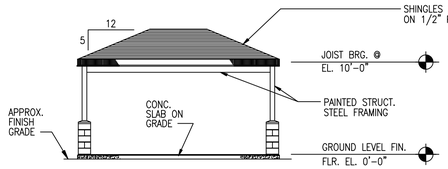

NORTH ELEV. – COVERED SEATING

1/8" = 1'–0" (SOUTH ELEV. – OPP. HAND)

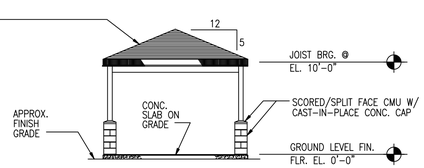

EAST ELEV. – COVERED SEATING

1/8" = 1'–0" (WEST ELEV. – OPP. HAND)

0 4 8 16 24

1/8"=1'–0"

J.A. JONES OF THE CAROLINAS

LOCKWOOD GREENE Consulting Engineers

DSGN P. BLACKBURN | DR N. BABB | CHK AB / DY
SURV. F.S.S. | CH ENGR P. BLACKBURN
SUBMITTED BY (PRM MEMBER TITLE): V.P. 03-MAY-1999
TECHNICAL BRANCH
FPE

DRAWING REVISIONS

Rev.	Description	Prep By	Date	Apprvd.
0	FINAL DESIGN SUBMITTAL	NGB	5/3/99	PB/LB
1	ISSUE FOR RECORD	NGB	6/1/01	LB/DT

BEAUFORT, S.C.

BACHELOR ENLISTED QUARTERS – PHASE IV

ARCHITECTURAL

NORTH/SOUTH ELEV. @ 60/90 MODULE BEQ; COMM. CTR. ELEVS.

MCAS

APPROVED

Naval Facilities Engineering Command
Southern Division
Charleston, South Carolina

DATE EFD FOR COMMANDER, NAVFAC

RECORD DRAWING DATE 01-JUN-01
CODE I.D. NO. 80091
DRAWING SIZE: D
SPEC. NO.06-98-0690
CONSTRN. CONTR. NO. N62467-98-D-0690
NAVFAC DRAWING NO. 5364394
SHEET 22 OF 34

AEL-06

$$$$ USERNAME $$$$ $$$$ DATE&TIME $$$$ $$$$ DESIGN FILE NAME $$$$

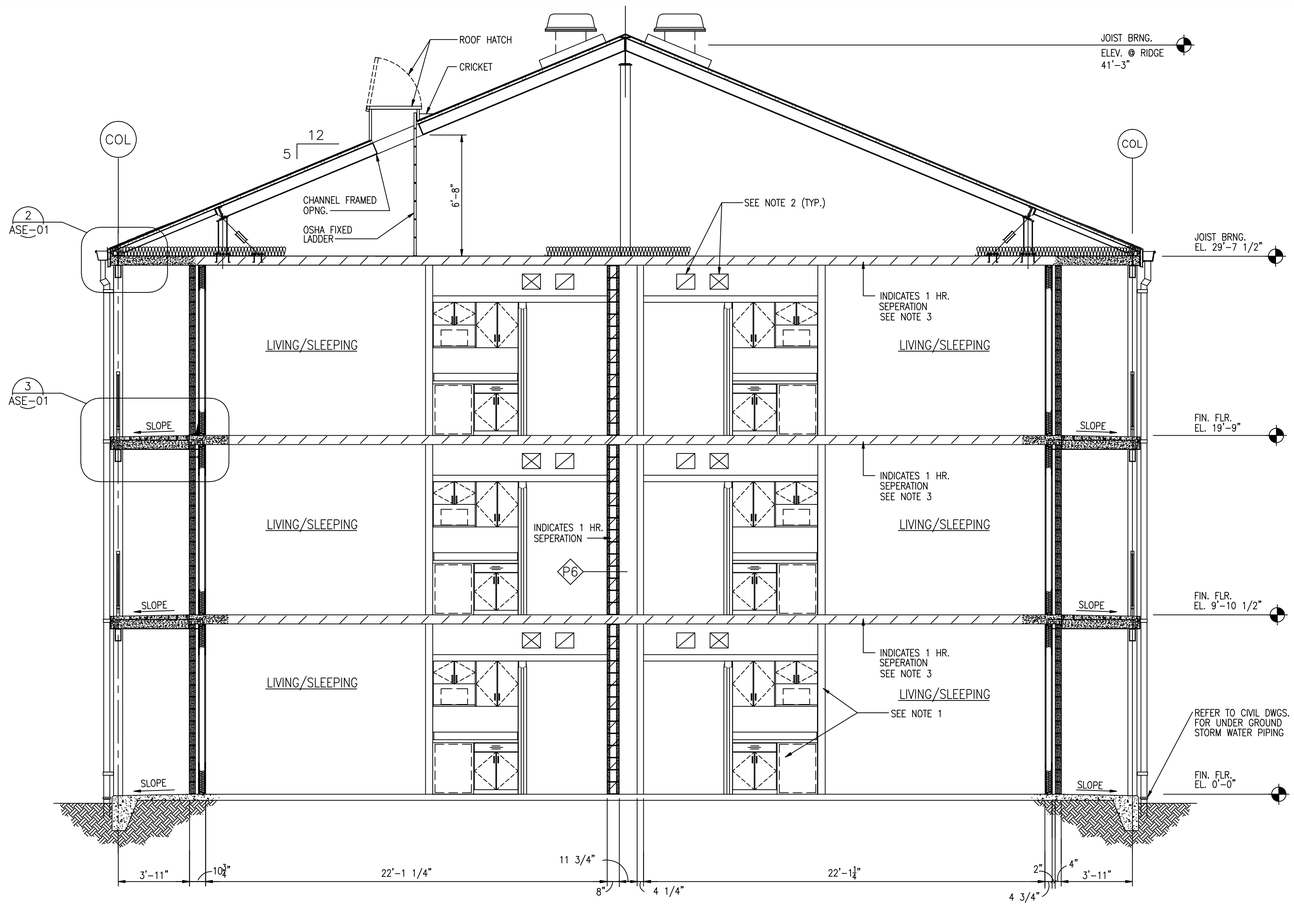

SECTION 1 APL-01, APL-05
1/4"=1'-0" ASE-01

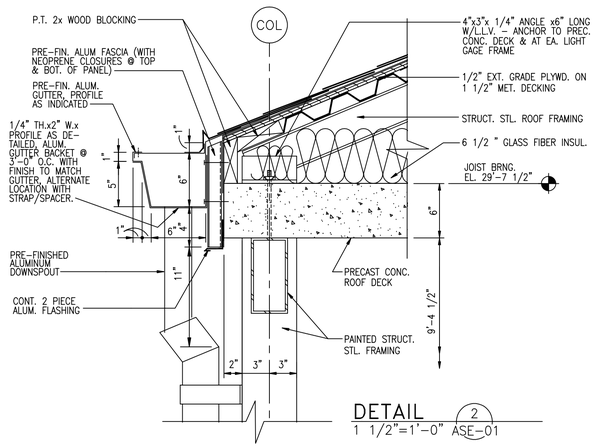

DETAIL 2
1 1/2"=1'-0" ASE-01

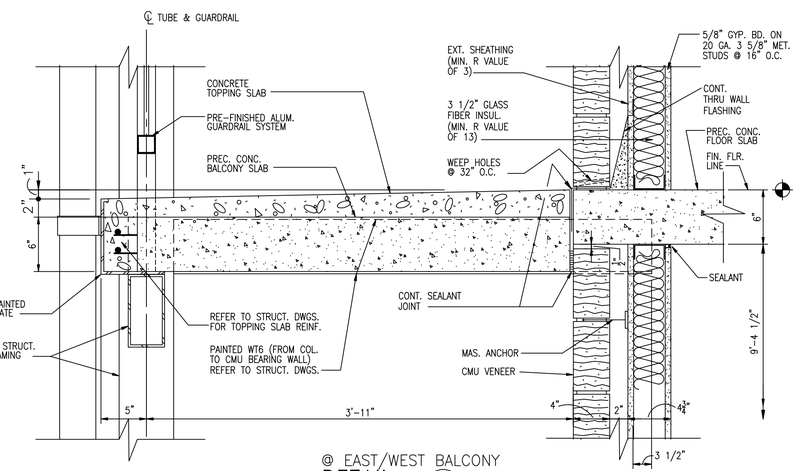

@ EAST/WEST BALCONY
DETAIL 3 ASE-01
1 1/2"=1'-0" ASE-01

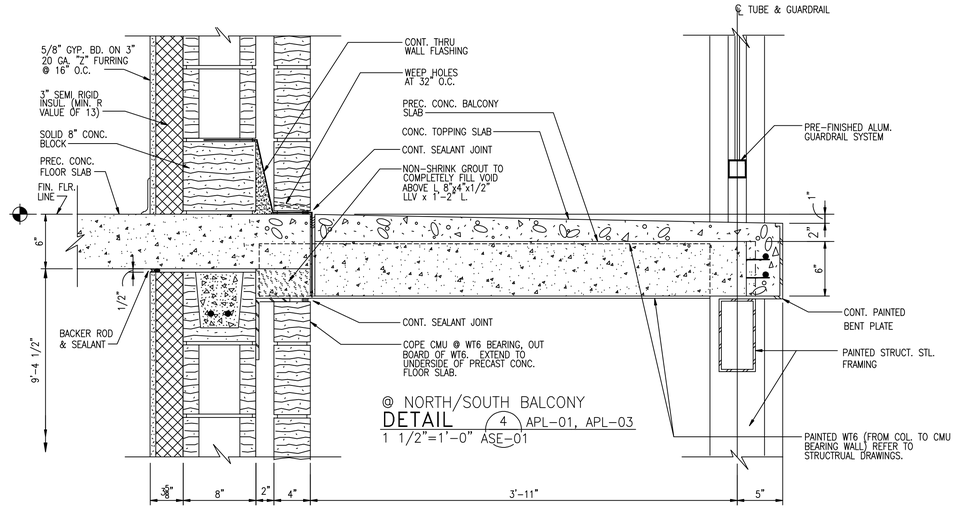

@ NORTH/SOUTH BALCONY
DETAIL 4 APL-01, APL-03
1 1/2"=1'-0" ASE-01

NOTE:

1. REFER TO 2/AEL-01 FOR CABINET ELEVATION.
2. FIRE/SMOKE (AND SOUND) CONTROL, HORIZONTAL OR VERTICAL FOR MECHANICAL AND ELECTRICAL WALL/FLOOR PENETRATIONS TO BE SEALED WITH "UNITED STATES GYPSUM COMPANIES" FIRE CODE COMPOUND AND THERMAFIBER SAFING INSULATION, OR APPROVED EQUIVALENT SYSTEM. FIRE CODE COMPOUND MEETS ASTM E814. THERMAFIBER SAFING INSULATION MEETS ASTM C665. INSTALL ONE HOUR FLOOR/CEILING AND WALL ASSEMBLIES PER UNDERWRITERS LABORATORIES DESIGN REQUIREMENTS AND PER MANUFACTURERS RECOMMENDATIONS/SPECIFICATIONS.
3. 6" PRECAST HOLLOW CORE SAND-LIGHT WEIGHT CONCRETE SLABS TO PROVIDE A FIRE RESISTANCE RATING OF ONE HOUR PER THE "STANDARD BUILDING CODE" (1997 EDITION) TABLE 709.2.2.1. THE EQUIVALENT THICKNESS TO BE DETERMINED PER 709.2.2.1.2.

0 1 2
1 1/2"=1'-0"

0 4 8 12
1/4"=1'-0"

J.A. JONES
J.A. JONES CONSTRUCTION SERVICES
J.A. JONES ENVIRONMENTAL SERVICES
LOCKWOOD GREENE
Consulting-Design-Construction

DSGN P. BLACKBURN	DR N. BABB	CHK AB / DY
SUPV F.S.S.	CH ENGR P. BLACKBURN	
SUBMITTED BY (FIRM MEMBER-TITLE) V.P.		DATE 03-MAY-1999
TECHNICAL BRANCH		
FPE		

DRAWING REVISIONS

Rev.	Description	Prep By	Date	Approvd.
0	FINAL DESIGN SUBMITTAL	MCB	5/2/98	PB/LB
1	REVISED AS NOTED	SM/RW	7/12/99	PB/DT
2	REVISED AS NOTED	PAB	10/28/99	PB/LB
3	ISSUE FOR RECORD	MCB	6/1/01	LB/DT

ETD FOR COMMANDER, NAVFAC

MCAS BEAUFORT, S.C.
BACHELOR ENLISTED QUARTERS - PHASE IV
ARCHITECTURAL
TYPICAL CROSS SECTION 60/90 MODULE BEQ & DETAILS
APPROVED DATE

Naval Facilities Engineering Command
Southern Division
Charleston, South Carolina

RECORD DRAWING DATE	01-JUN-01
CODE I.D. NO.	80091
DRAWING SIZE:	D
SPEC. NO.	06-98-0690
CONSTRN. CONTR. NO.	N62467-98-D-0690
NAVFAC DRAWING NO.	5364395
SHEET 23	OF 34

ASE-01

$$$$ USERNAME $$$$ $$$$ DATE&TIME $$$$ $$$$ DESIGN FILE NAME $$$$

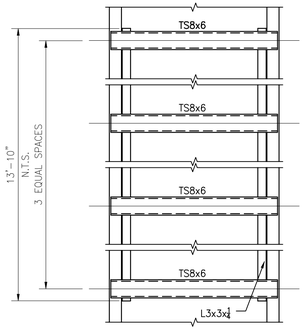

PLAN

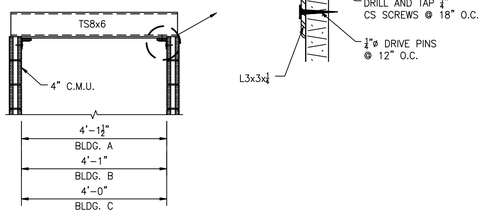

SECTION

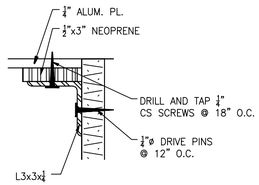

DETAIL 1
1/2"=1'-0" ASE-02

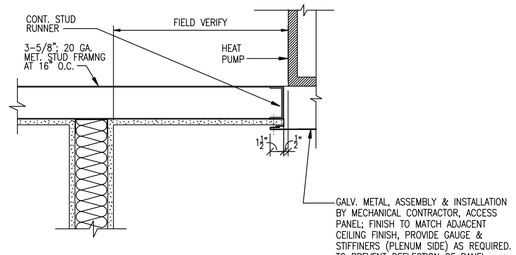

ACCESS PANEL (INTERIOR)
DETAIL 2
1 1/2"=1'-0" ASE-02

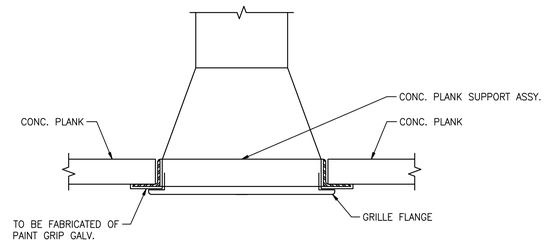

CLOSURE AT 3RD FLOOR BREEZEWAY
OUTSIDE AIR GRILLE SUPPLY
DETAIL 3
1 1/2"=1'-0" ASE-02

COL

COL

4"x3"x 1/4" x6" LONG ANGLE W/L.L.V. ANCHOR TO P.C. CONC. DECK & AT EA. LT. GAUGE FRAME

BACK TO BACK & CONT. COLD FORMED FRAMING RUNNERS (14 GAUGE)

COL

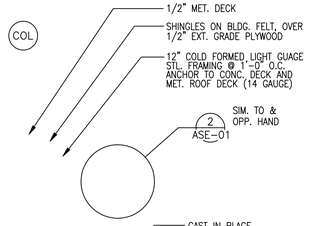

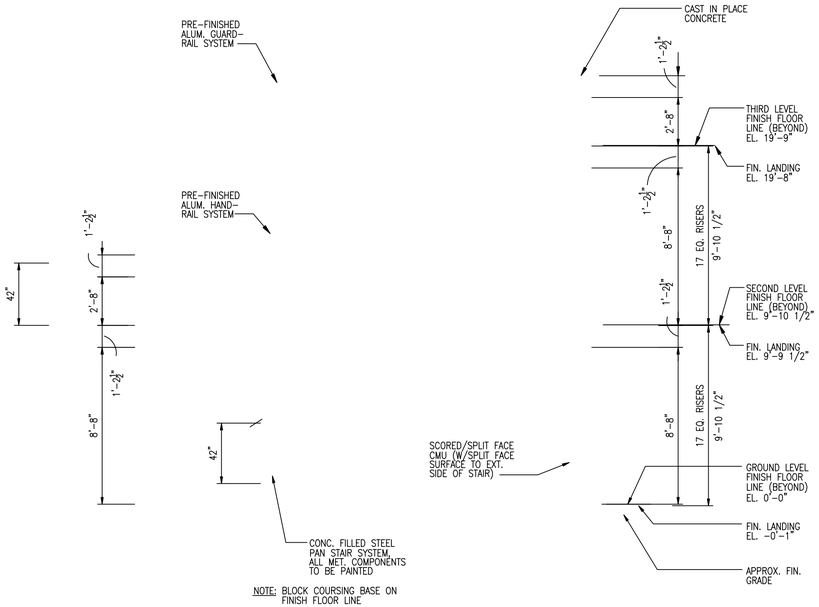

NOTE: BLOCK COURSING BASE ON FINISH FLOOR LINE

STAIR SECTION 3
1/4"=1'-0" ASE-02

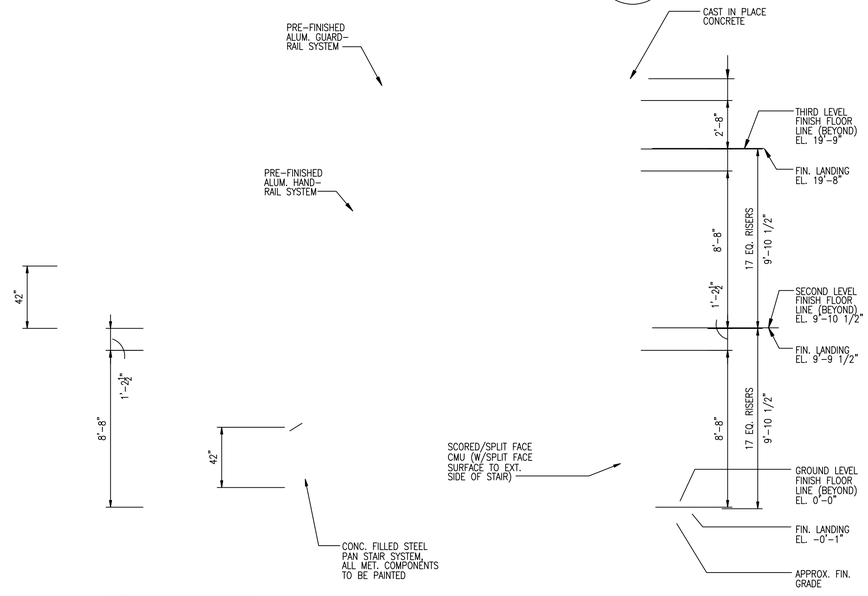

NOTE: BLOCK COURSING BASE ON FINISH FLOOR LINE

STAIR SECTION 4
1/4"=1'-0" ASE-02

J.A. JONES CONSTRUCTION COMPANY
J.A. JONES MANAGEMENT SERVICES, INC.
LOCKWOOD GREENE
Consulting•Design•Construction

DSGN P. BLACKBURN | DR N. BABB | CHK AB / DY
SUPV F.S.S. | CH ENGR P. BLACKBURN
SUBMITTED BY (FIRM MEMBER ONLY) V.P. 03-MAY-1999 DATE
TECHNICAL BRANCH
FPE

DRAWING REVISIONS

Rev.	Description	Prep By	Date	Apprvd.
0	FINAL DESIGN SUBMITTAL	NGB	05/03/99	PB/LB
1	REVISED AS NOTED	SM/RW	07/12/99	PB/DT
2	ISSUE FOR RECORD	NGB	06/01/01	LB/DT

BEAUFORT, S.C.

BACHELOR ENLISTED QUARTERS - PHASE IV

ARCHITECTURAL
STAIR SECTIONS AND DETAILS

MCAS

APPROVED

DATE

ETD FOR COMMANDER, NAVFAC

Naval Facilities Engineering Command
Southern Division
Charleston, South Carolina

RECORD DRAWING DATE
01 JUNE 2001

CODE I.D. NO.	80091
DRAWING SIZE:	D
SPEC. NO.	06-98-0690
CONSTRN. CONTR. NO.	N62467-98-D-0690
NAVFAC DRAWING NO.	5364396
SHEET 24	OF 34

ASE-02

$$$$ USERNAME $$$$ $$$$ DATE&TIME $$$$ $$$$ DESIGN FILE NAME $$$$

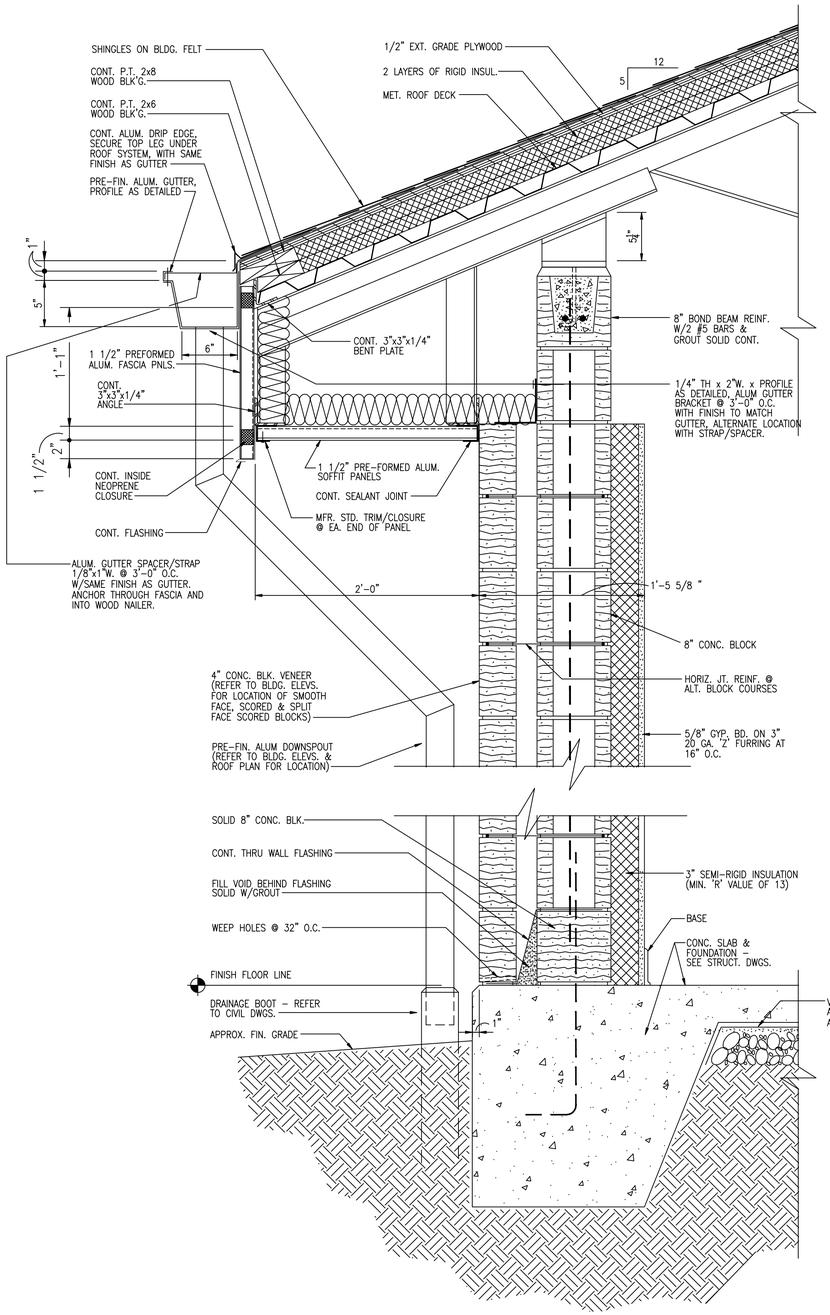

DETAIL 1 APL-08
1 1/2"=1'-0" ASE-03

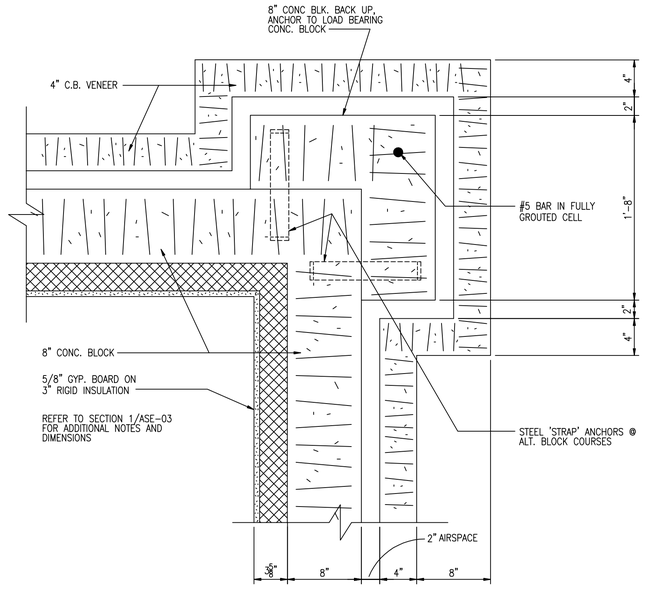

DETAIL 2
1 1/2"=1'-0" ASE-03

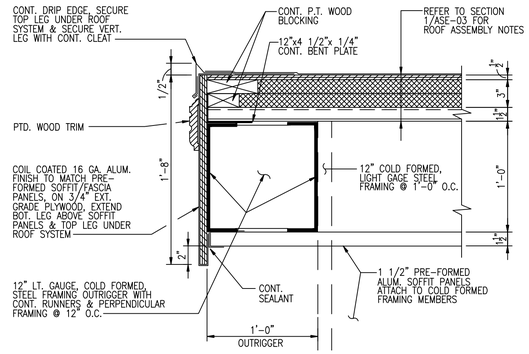

C.C. ENTRY EAVE
DETAIL 3
1 1/2"=1'-0" ASE-03

0 1 2
1 1/2"=1'-0"

J.A. JONES OF THE CAROLINAS
LOCKWOOD GREENE
Consulting Engineers and Constructors

	DSGN	DR	CHK	AS / DY
P. BLACKBURN	N. BABB	P. BLACKBURN		
	SUPV.	CH ENGR.		
P.S.S.	P. BLACKBURN			
	SUBMITTED BY (PRIN MEMBER-IN-CHG):		DATE	
	L.V.P.		03-MAY-1999	
	TECHNICAL BRANCH			
				PPE

DRAWING REVISIONS

Rev.	Description	Prep By	Date	Apprvd.
0	FINAL DESIGN SUBMITTAL	NGB	5/3/99	PB/LB
1	ISSUE FOR RECORD	NGB	6/1/01	LB/DT

BEAUFORT, S.C.

BACHELOR ENLISTED QUARTERS - PHASE IV

ARCHITECTURAL

SECTIONS AT COMMUNITY CENTER

EFD FOR COMMANDER, NAVFAC

MCAS

BACHELOR ENLISTED QUARTERS

ARCHITECTURAL

SECTIONS AT COMMUNITY CENTER

DATE

APPROVED

Naval Facilities Engineering Command
Southern Division
Charleston, South Carolina

RECORD DRAWING DATE
01-JUN-01

CODE I.D. NO. 80091

DRAWING SIZE: D

SPEC. NO.06-98-0690

CONSTRN. CONTR. NO. N62467-98-D-0690

NAVFAC DRAWING NO. 5364397

SHEET 25 OF 34

ASE-03

$$$$ USERNAME $$$$ $$$$ DATE&TIME $$$$ $$$$ DESIGN FILE NAME $$$$

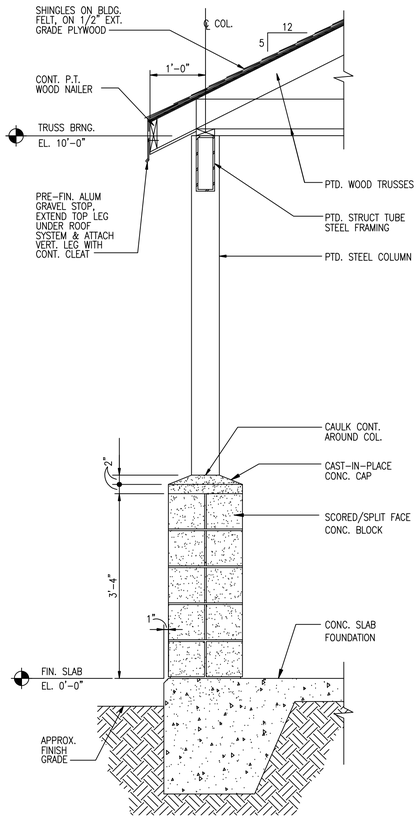

COVERED SEATING
SECTION 1
3/4"=1'-0" ASE-04

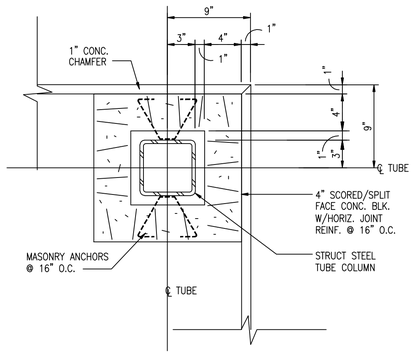

BLDG. CORNER
DETAIL 2
1 1/2"=1'-0" ASE-04

0 1 2 3 4
3/4"=1'-0"

0 1 2
1 1/2"=1'-0"

J.A. JONES MANAGEMENT SERVICES
J.A. JONES OF THE CAROLINAS
LOCKWOOD GREENE Consulting Design Construction
Rock, Georgia

DSGN P. BLACKBURN	DR N. BABB	CHK AB / DY	
SUPV F.S.S.	CH ENGR P. BLACKBURN		
SUBMITTED BY (FIRM MEMBER-TITLE): Roger Stroud V.P.	03-MAY-1999	DATE	
TECHNICAL BRANCH			
FPE			

DRAWING REVISIONS

Rev.	Description	Prep By	Date	Apprvd.
0	FINAL DESIGN SUBMITTAL	NGB	5/3/99	PB/LB
1	ISSUE FOR RECORD	NGB	6/1/01	LB/DT

MCAS BEAUFORT, S.C.
BACHELOR ENLISTED QUARTERS - PHASE IV
SECTIONS @ COMMUNITY CENTER AND COVERED SEATING

APPROVED DATE EFD FOR COMMANDER, NAVFAC

Naval Facilities Engineering Command
Southern Division
Charleston, South Carolina

RECORD DRAWING DATE 01-JUN-01
CODE I.D. NO. 80091
DRAWING SIZE: D
SPEC. NO.06-98-0690
CONSTRN. CONTR. NO. N62467-98-D-0690
NAVFAC DRAWING NO. 5364398
SHEET 26 OF 34
ASE-04

$$$$ USERNAME $$$$ $$$$ DATE&TIME $$$$ $$$$ DESIGN FILE NAME $$$$

FINISH SCHEDULE

ROOM NO.	DESCRIPTION	FLOOR MAT'L.	C	BASE MAT'L.	C	NORTH MAT'L.	NORTH FINISH	C	SOUTH MAT'L.	SOUTH FINISH	C	EAST MAT'L.	EAST FINISH	C	WEST MAT'L.	WEST FINISH	C	CEILING MAT'L.	CEILING FINISH	C	CEILING HEIGHT	DOOR COLOR	REMARKS
	90 MODULE BEQ (TYPICAL @ GROUND, SECOND, THIRD FLOOR LEVELS) 'A'																						
*	MODULE 'A'																						* REFER TO FLOOR PLAN FOR ROOM SIGNAGE NUMBER
	LIVING/SLEEPING	CARPET		VINYL		*C.B.	PTD.		C.B.	PTD.		G.B.	PTD.		G.B.	PTD.		CONC.	PTD.		9'-4 1/2"		* NORTH WALL ADJACENT TO COL. LINE "2" G.B.
	CLOSET 'A'	CARPET		VINYL		G.B.	PTD.		C.B.	PTD.		C.B.	PTD.		G.B.	PTD.		G.B.	PTD.		7'-4"		
	CLOSET 'B'	CARPET		VINYL		*C.B.	PTD.		G.B.	PTD.		G.B.	PTD.		G.B.	PTD.		G.B.	PTD.		7'-4"		* NORTH WALL ADJACENT TO COL. LINE "2" G.B.
	TOILET/SHOWER	C.T.		C.T.		C.B. / G.B.	C.T. / PTD.		G.B.	PTD.		C.B. / G.B.	*P.T. / C.T.		G.B.	C.T. / PTD.		G.B.	PTD.		7'-4"		* NORTH WALL ADJACENT TO COL. LINE "2" G.B.
	SERVICE AREA	V.C.T.		VINYL		G.B.	PTD.		G.B.	PTD.		G.B.	PTD.		G.B.	PTD.		G.B.	PTD.		7'-4"		
*	MODULE 'B'																						* REFER TO FLOOR PLAN FOR ROOM SIGNAGE NUMBER
	LIVING/SLEEPING	CARPET		VINYL		C.B.	PTD.		*C.B.	PTD.		G.B.	PTD.		G.B.	PTD.		CONC.	PTD.		9'-4 1/2"		* SOUTH WALL ADJACENT TO COL. LINE "18" G.B.
	CLOSET 'A'	CARPET		VINYL		C.B.	PTD.		G.B.	PTD.		C.B.	PTD.		G.B.	PTD.		G.B.	PTD.		7'-4"		
	CLOSET 'B'	CARPET		VINYL		G.B.	PTD.		*C.B.	PTD.		G.B.	PTD.		G.B.	PTD.		G.B.	PTD.		7'-4"		* SOUTH WALL ADJACENT TO COL. LINE "18" G.B.
	TOILET/SHOWER	C.T.		C.T.		G.B.	PTD.		G.B. / *C.B.	PTD. / C.T.		C.B. / G.B.	PTD. / C.T.		G.B.	C.T. / PTD.		G.B.	PTD.		7'-4"		* SOUTH WALL ADJACENT TO COL. LINE "18" G.B.
	SERVICE AREA	V.C.T.		VINYL		C.B.	PTD.		G.B.	PTD.		G.B.	PTD.		G.B.	PTD.		G.B.	PTD.		7'-4"		
*	MODULE 'C'																						* REFER TO FLOOR PLAN FOR ROOM SIGNAGE NUMBER
	LIVING/SLEEPING	CARPET		VINYL		C.B.	PTD.		C.B.	PTD.		G.B.	PTD.		G.B.	PTD.		CONC.	PTD.		9'-4 1/2"		* NORTH WALL ADJACENT TO COL. LINE "2" G.B.
	CLOSET 'A'	CARPET		VINYL		G.B.	PTD.		C.B.	PTD.		G.B.	PTD.		G.B.	PTD.		G.B.	PTD.		7'-4"		
	CLOSET 'B'	CARPET		VINYL		*C.B.	PTD.		G.B.	PTD.		G.B.	PTD.		G.B.	PTD.		G.B.	PTD.		7'-4"		* NORTH WALL ADJACENT TO COL. LINE "2" G.B.
	TOILET/SHOWER	C.T.		C.T.		*C.B. / G.B.	C.T. / PTD.		G.B.	PTD.		G.B.	C.T. / PTD		G.B.	C.T. / PTD.		G.B.	PTD.		7'-4"		* NORTH WALL ADJACENT TO COL. LINE "2" G.B.
	SERVICE AREA	V.C.T.		VINYL		G.B.	PTD.		C.B.	PTD.		G.B.	PTD.		G.B.	PTD.		G.B.	PTD.		7'-4"		
*	MODULE 'D'																						* REFER TO FLOOR PLAN FOR ROOM SIGNAGE NUMBER
	LIVING/SLEEPING	CARPET		VINYL		C.B.	PTD.		*C.B.	PTD.		G.B.	PTD.		G.B.	PTD.		CONC.	PTD.		9'-4 1/2"		* SOUTH WALL ADJACENT TO COL. LINE "18" G.B.
	CLOSET 'A'	CARPET		VINYL		C.B.	PTD.		G.B.	PTD.		G.B.	PTD.		G.B.	PTD.		G.B.	PTD.		7'-4"		
	CLOSET 'B'	CARPET		VINYL		G.B.	PTD.		*C.B.	PTD.		G.B.	PTD.		G.B.	PTD.		G.B.	PTD.		7'-4"		* SOUTH WALL ADJACENT TO COL. LINE "18" G.B.
	TOILET/SHOWER	C.T.		C.T.		G.B.	PTD.		*C.B. / G.B.	C.T. / PTD.		G.B.	PTD. / C.T.		G.B.	C.T. / PTD.		G.B.	PTD.		7'-4"		* SOUTH WALL ADJACENT TO COL. LINE "18" G.B.
	SERVICE AREA	V.C.T.		VINYL		C.B.	PTD.		G.B.	PTD.		G.B.	PTD.		G.B.	PTD.		G.B.	PTD.		7'-4"		
	MECH RM 'A'	SEALED CONC.		*VINYL		C.B.	PTD.		G.B.	PTD.		G.B.	PTD.		G.B.	PTD.		CONC.	---		9'-4 1/2"		* VINYL BASE @ GYP. BD. WALLS ONLY
	ELEC/TELE RM 'A'	SEALED CONC.		*VINYL		C.B.	PTD.		G.B.	PTD.		G.B.	PTD.		G.B.	PTD.		CONC.	---		9'-4 1/2"		* VINYL BASE @ GYP. BD. WALLS ONLY
	MECH RM 'B'	SEALED CONC.		*VINYL		G.B.	PTD.		C.B.	PTD.		G.B.	PTD.		G.B.	PTD.		CONC.	---		9'-4 1/2"		* VINYL BASE @ GYP. BD. WALLS ONLY
	ELEC/TELE RM 'B'	SEALED CONC.		*VINYL		G.B.	PTD.		C.B.	PTD.		G.B.	PTD.		G.B.	PTD.		CONC.	---		9'-4 1/2"		* VINYL BASE @ GYP. BD. WALLS ONLY
	ELEC. RM. 'C' 2ND FLOOR ONLY	SEALED CONC.		*VINYL		C.B.	PTD.		G.B.	PTD.		G.B.	PTD.		G.B.	PTD.		CONC.	---		9'-4 1/2"		* VINYL BASE @ GYP. BD. WALLS ONLY
	COMMUNITY CENTER																						
D-101	LOBBY	CARPET		VINYL		---	---		G.B.	PTD.		G.B.	PTD.		G.B.	PTD.		A.T.	FAC.		10'-0"		
D-102	CORRIDOR	CARPET		VINYL		G.B.	PTD.		G.B.	PTD.		---	---		---	---		A.T.	FAC.		10'-0"		
D-103	RECEPTION	CARPET		VINYL		---	---		G.B.	PTD.		G.B.	PTD.		G.B.	PTD.		A.T.	FAC.		10'-0"		
D-104	ADMINISTRATION	CARPET		VINYL		G.B.	PTD.		G.B.	PTD.		G.B.	PTD.		G.B.	PTD.		A.T.	FAC.		9'-0"		
D-105	ELEC/TELE RM.	V.C.T.		VINYL		G.B.	PTD.		G.B.	PTD.		G.B.	PTD.		G.B.	PTD.		---	---		OPEN TO STRUCTURE		
D-106	COMPUTER ROOM	CARPET		VINYL		G.B.	PTD.		G.B.	PTD.		G.B.	PTD.		G.B.	PTD.		A.T.	FAC.		9'-0"		
D-107	T.V. LOUNGE	CARPET		VINYL		G.B.	PTD.		G.B.	PTD.		---	---		G.B.	PTD.		A.T.	FAC.		10'-0"		
D-108	GAME/REC. RM	CARPET		VINYL		G.B.	PTD.		G.B.	PTD.		G.B.	PTD.		---	---		A.T.	FAC.		10'-0"		
D-109	M. TOILET	C.T.		C.T.		G.B.	PTD.		G.B.	PTD.		G.B.	PTD.		G.B.	PTD.		G.B.	PTD.		8'-0"		
D-110	HOUSEKEEPING	V.C.T.		VINYL		G.B.	PTD.		G.B.	PTD.		G.B.	PTD.		G.B.	PTD.		G.B.	PTD.		9'-0"		
D-111	W. TOILET	C.T.		C.T.		G.B.	PTD.		G.B.	PTD.		G.B.	PTD.		G.B.	PTD.		G.B.	PTD.		8'-0"		
D-112	MECHANICAL ROOM	SEALED CONC.		VINYL		G.B.	PTD.		G.B.	PTD.		G.B.	PTD.		G.B.	PTD.		---	---		OPEN TO STRUCTURE		
D-113	CENTRAL LAUNDRY	QUARRY TILE		QUARRY TILE		G.B.	PTD.		G.B.	PTD.		G.B.	PTD.		G.B.	PTD.		A.T.	FAC.		10'-0"		
D-114	SPRINKLER CLOSET	SEALED CONC.		VINYL		G.B.	PTD.		G.B.	PTD.		G.B.	PTD.		G.B.	PTD.		---	---		OPEN TO STRUCTURE		
D-115	ELEC. RM.	SEALED CONC.		VINYL		G.B.	PTD.		G.B.	PTD.		G.B.	PTD.		G.B.	PTD.		---	---		OPEN TO STRUCTURE		
D-116	STORAGE	V.C.T.		VINYL		G.B.	PTD.		G.B.	PTD.		G.B.	PTD.		G.B.	PTD.		G.B.	PTD.		9'-0"		
	UTILITY BUILDING																						
E-101	UTILITIES	SEALED CONC.		---		C.B.	PT		C.B.	PT		C.B.	PT		C.B.	PT		---	---		OPEN TO STRUCTURE		

ROOM NO.	DESCRIPTION	FLOOR MAT'L.	C	BASE MAT'L.	C	NORTH MAT'L.	NORTH FINISH	C	SOUTH MAT'L.	SOUTH FINISH	C	EAST MAT'L.	EAST FINISH	C	WEST MAT'L.	WEST FINISH	C	CEILING MAT'L.	CEILING FINISH	C	CEILING HEIGHT	DOOR COLOR	REMARKS
	60 MODULE BEQ (TYPICAL @ GROUND, SECOND, THIRD FLOOR LEVELS) 'B' & 'C'																						
*	MODULE 'A'																						* REFER TO FLOOR PLAN FOR ROOM SIGNAGE NUMBER
	LIVING/SLEEPING	CARPET		VINYL		*C.B.	PTD.		C.B.	PTD.		G.B.	PTD.		G.B.	PTD.		CONC.	PTD.		9'-4 1/2"		* NORTH WALL ADJACENT TO COL. LINE "2" -G.B.
	CLOSET 'A'	CARPET		VINYL		G.B.	PTD.		C.B.	PTD.		C.B.	PTD.		G.B.	PTD.		G.B.	PTD.		7'-4"		
	CLOSET 'B'	CARPET		VINYL		*C.B.	PTD.		G.B.	PTD.		G.B.	PTD.		G.B.	PTD.		G.B.	PTD.		7'-4"		* NORTH WALL ADJACENT TO COL. LINE "2" -G.B.
	TOILET/SHOWER	C.T.		C.T.		*C.B. / G.B.	C.T. / PTD.		G.B.	PTD.		C.B. / G.B.	*PT. / C.T.		G.B.	C.T. / PTD.		G.B.	PTD.		7'-4"		* NORTH WALL ADJACENT TO COL. LINE "2" -G.B.
	SERVICE AREA	V.C.T.		VINYL		G.B.	PTD		C.B.	PTD.		G.B.	PTD.		G.B.	PTD.		G.B.	PTD.		7'-4"		
*	MODULE 'B'																						* REFER TO FLOOR PLAN FOR ROOM SIGNAGE NUMBER
	LIVING/SLEEPING	CARPET		VINYL		C.B.	PTD.		*C.B.	PTD.		G.B.	PTD.		G.B.	PTD.		CONC.	PTD.		9'-4 1/2"		* SOUTH WALL ADJACENT TO COL. LINE "13" G.B.
	CLOSET 'A'	CARPET		VINYL		C.B.	PTD.		G.B.	PTD.		C.B.	PTD.		G.B.	PTD.		G.B.	PTD.		7'-4"		
	CLOSET 'B'	CARPET		VINYL		G.B.	PTD.		*C.B.	PTD.		G.B.	PTD.		G.B.	PTD.		G.B.	PTD.		7'-4"		* SOUTH WALL ADJACENT TO COL. LINE "13" G.B.
	TOILET/SHOWER	C.T.		C.T.		G.B.	PTD.		G.B. / *C.B	PTD. / C.T.		C.B. / G.B.	PTD. / C.T.		G.B.	C.T. / PTD.		G.B.	PTD.		7'-4"		* SOUTH WALL ADJACENT TO COL. LINE "13" G.B.
	SERVICE AREA	V.C.T.		VINYL		C.B.	PTD.		G.B.	PTD.		G.B.	PTD.		G.B.	PTD.		G.B.	PTD.		7'-4"		
*	MODULE 'C'																						* REFER TO FLOOR PLAN FOR ROOM SIGNAGE NUMBER
	LIVING/SLEEPING	CARPET		VINYL		*C.B.	PTD.		C.B.	PTD.		G.B.	PTD.		G.B.	PTD.		CONC.	PTD.		9'-4 1/2"		* NORTH WALL ADJACENT TO COL. LINE "2" G.B.
	CLOSET 'A'	CARPET		VINYL		G.B.	PTD.		C.B.	PTD.		G.B.	PTD.		G.B.	PTD.		G.B.	PTD.		7'-4"		
	CLOSET 'B'	CARPET		VINYL		*C.B.	PTD.		G.B.	PTD.		G.B.	PTD.		G.B.	PTD.		G.B.	PTD.		7'-4"		* NORTH WALL ADJACENT TO COL. LINE "2" G.B.
	TOILET/SHOWER	C.T.		C.T.		*C.B. / G.B.	C.T. / PTD		G.B.	PTD.		G.B.	C.T. / PTD		G.B.	C.T. / PTD.		G.B.	PTD.		7'-4"		* NORTH WALL ADJACENT TO COL. LINE "2" G.B.
	SERVICE AREA	V.C.T.		VINYL		G.B.	PTD.		C.B.	PTD.		G.B.	PTD.		G.B.	PTD.		G.B.	PTD.		7'-4"		
*	MODULE 'D'																						* REFER TO FLOOR PLAN FOR ROOM SIGNAGE NUMBER
	LIVING/SLEEPING	CARPET		VINYL		C.B.	PTD.		*C.B.	PTD.		G.B.	PTD.		G.B.	PTD.		CONC.	PTD.		9'-4 1/2"		* SOUTH WALL ADJACENT TO COL. LINE "13" G.B.
	CLOSET 'A'	CARPET		VINYL		C.B.	PTD.		G.B.	PTD.		G.B.	PTD.		G.B.	PTD.		G.B.	PTD.		7'-4"		
	CLOSET 'B'	CARPET		VINYL		G.B.	PTD.		*C.B.	PTD.		G.B.	PTD.		G.B.	PTD.		G.B.	PTD.		7'-4"		* SOUTH WALL ADJACENT TO COL. LINE "13" G.B.
	TOILET/SHOWER	C.T.		C.T.		G.B.	PTD.		*C.B. / G.B.	C.T. / PTD.		G.B.	PTD. / C.T.		G.B.	C.T. / PTD.		G.B.	PTD.		7'-4"		* SOUTH WALL ADJACENT TO COL. LINE "13" G.B.
	SERVICE AREA	V.C.T.		VINYL		C.B.	PTD.		G.B.	PTD.		G.B.	PTD.		G.B.	PTD.		G.B.	PTD.		7'-4"		
	MECH RM 'A'	SEALED CONC.		*VINYL		C.B.	PTD.		G.B.	PTD.		G.B.	PTD.		G.B.	PTD.		CONC.	---		9'-4 1/2"		* VINYL BASE @ GYP. BD. WALLS ONLY
	ELEC/TELE RM 'A'	SEALED CONC.		*VINYL		C.B.	PTD.		G.B.	PTD.		G.B.	PTD.		G.B.	PTD.		CONC.	---		9'-4 1/2"		* VINYL BASE @ GYP. BD. WALLS ONLY
	MECH RM 'B'	SEALED CONC.		*VINYL		G.B.	PTD.		C.B.	PTD.		G.B.	PTD.		G.B.	PTD.		CONC.	---		9'-4 1/2"		* VINYL BASE @ GYP. BD. WALLS ONLY
	ELEC/TELE RM 'B'	SEALED CONC.		*VINYL		G.B.	PTD.		C.B.	PTD.		G.B.	PTD.		G.B.	PTD.		CONC.	---		9'-4 1/2"		* VINYL BASE @ GYP. BD. WALLS ONLY
	ELEC. RM. 'C' 2ND FLOOR ONLY	SEALED CONC.		*VINYL		C.B.	PTD.		G.B.	PTD.		G.B.	PTD.		G.B.	PTD.		CONC.	---		9'-4 1/2"		* VINYL BASE @ GYP. BD. WALLS ONLY

J.A. JONES MANAGEMENT SERVICES
J.A. JONES OF THE CAROLINAS
LOCKWOOD GREENE Consulting·Design·Construction Atlanta, Georgia

DSGN P. BLACKBURN DR N. BABB CHK AB / DY
SUPV F.S.S. CH ENGR P. BLACKBURN
SUBMITTED BY (FIRM MEMBER-TITLE): V.P. 03-MAY-1999 DATE
TECHNICAL BRANCH
FPE

DRAWING REVISIONS

Rev.	Description	Prep By	Date	Apprvd.
0	FINAL DESIGN SUBMITTAL	NGB	5/3/99	PB/LB
1	ISSUE FOR RECORD	NGB	6/1/01	LB/DT

MCAS BEAUFORT, S.C.
BACHELOR ENLISTED QUARTERS – PHASE IV
ARCHITECTURAL FINISH SCHEDULE
APPROVED DATE EFD FOR COMMANDER, NAVFAC

Naval Facilities Engineering Command
Southern Division
Charleston, South Carolina

RECORD DRAWING DATE 01-JUN-01
CODE I.D. NO. 80091
DRAWING SIZE: D
SPEC. NO.06-98-0690
CONSTRN. CONTR. NO. N62467-98-D-0690
NAVFAC DRAWING NO. 5364399
SHEET 27 OF 34
ASC-01

DOOR SCHEDULE

DOOR NO.	TYPE	DOOR SIZE	DOOR MAT.	LABEL	FRAME	DETAILS HEAD	DETAILS JAMB	DETAILS SILL	THRESHOLD	HARDWARE GROUP	GLASS SIZE	LOUVER SIZE	REMARKS
BEQ A,B & C (TYPICAL @ GROUND, SECOND & THIRD FLOOR LEVELS)													
A	A	3'-0" x 7'-0" x 1 3/4"	INSUL. ALUM.	———	*ALUM.	1/ADE-01	2/ADE-01	3/ADE-01	ALUM.		———	———	* 4" HEAD
B	A	2'-6" x 7'-0" x 1 3/4"	* S.C. WOOD	———	H.M.	4/ADE-01	5/ADE-01	6/ADE-01	———		———	18"x18"	* PAINT GRADE WOOD VENEER
C	A	2'-6" x 7'-0" x 1 3/4"	* S.C. WOOD	———	H.M.	4/ADE-01	5/ADE-01	6/ADE-01	———		———	———	* PAINT GRADE WOOD VENEER
D	A	2'-6" x 7'-0" x 1 3/4"	* S.C. WOOD	———	H.M.	4/ADE-01	5/ADE-01	6/ADE-01	STONE		———	———	* PAINT GRADE WOOD VENEER UNDERCUT DOOR 3/4"
E	A	2'-6" x 7'-0" x 1 3/4"	* S.C. WOOD	———	H.M.	4/ADE-01	5/ADE-01	6/ADE-01	———		———	———	* PAINT GRADE WOOD VENEER UNDERCUT DOOR 3/4"
F	A	3'-0" x 7'-0" x 1 3/4"	H.M.	———	* H.M.	7/ADE-01	8/ADE-01	9/ADE-01	ALUM.		———	———	* 4" HEAD
G	A	3'-0" x 8'-4" x 1 3/4"	H.M.	———	* H.M.	7/ADE-01	8/ADE-01	9/ADE-01	ALUM.		———	———	* 4" HEAD
COMMUNITY CENTER													
101	B	PR. 3'-0" x 8'-0" x 1 3/4"	ALUM./ GLASS	———	ALUM.	10/ADE-01	11/ADE-01	12/ADE-01	ALUM.		FULL	———	PROVIDE 1'-8" GLASS TRANSOM ABOVE DOOR
102	C	3'-0" x 7'-0" x 1 3/4"	* S.C. WOOD	———	H.M.	4/ADE-01	5/ADE-01	6/ADE-01	STONE		HALF	———	* PAINT GRADE WOOD VENEER
103	A	3'-0" x 7'-0" x 1 3/4"	* S.C. WOOD	———	H.M.	4/ADE-01	5/ADE-01	6/ADE-01	———		———	———	* PAINT GRADE WOOD VENEER
104	A	3'-0" x 7'-0" x 1 3/4"	* S.C. WOOD	———	H.M.	4/ADE-01	5/ADE-01	6/ADE-01	———		———	———	* PAINT GRADE WOOD VENEER
105	A	3'-0" x 8'-0" x 1 3/4"	* S.C. WOOD	———	H.M.	4/ADE-01	5/ADE-01	6/ADE-01	———		———	10" x 10"	* PAINT GRADE WOOD VENEER
106	A	3'-0" x 7'-0" x 1 3/4"	* S.C. WOOD	———	H.M.	4/ADE-01	5/ADE-01	6/ADE-01	———		———	12" x 12"	* PAINT GRADE WOOD VENEER
107		N O T U S E D											
108	D	3'-0" x 7'-0" x 1 3/4"	ALUM./ GLASS	———	* ALUM.	** SIM. TO 10/ADE-01	11/ADE-01	12/ADE-01	ALUM.		FULL	———	* 4" HEAD ** SIM. TO W/OUT TRANSOM
109	A	3'-0" x 7'-0" x 1 3/4"	* S.C. WOOD	———	H.M.	4/ADE-01	5/ADE-01	6/ADE-01	STONE		———	SEE NOTE 1	* PAINT GRADE WOOD VENEER
110	A	3'-0" x 7'-0" x 1 3/4"	* S.C. WOOD	———	H.M.	4/ADE-01	5/ADE-01	6/ADE-01	———		———	8" x 8"	* PAINT GRADE WOOD VENEER
111	A	3'-0" x 7'-0" x 1 3/4"	* S.C. WOOD	———	H.M.	4/ADE-01	5/ADE-01	6/ADE-01	STONE		———	SEE NOTE 1	* PAINT GRADE WOOD VENEER
112	E	PR. 3'-0" x 7'-0" x 1 3/4"	* S.C. WOOD	———	H.M.	4/ADE-01	5/ADE-01	6/ADE-01	———		———	12" x 12"	* PAINT GRADE WOOD VENEER
113	C	3'-0" x 7'-0" x 1 3/4"	* S.C. WOOD	———	H.M.	4/ADE-01	5/ADE-01	6/ADE-01	STONE		HALF	———	* PAINT GRADE WOOD VENEER
114	B	PR. 3'-0" x 7'-0" x 1 3/4"	ALUM./ GLASS	———	*ALUM.	** SIM. TO 10/ADE-01	11/ADE-01	12/ADE-01	ALUM.		FULL	———	* 4" HEAD ** SIM. TO W/OUT TRANSOM
115	A	3'-0" x 8'-0" x 1 3/4"	* S.C. WOOD	———	H.M.	** SIM. TO 4/ADE-01	5/ADE-01	6/ADE-01	———		———	8" x 8"	* PAINT GRADE WOOD VENEER ** SIM. TO W/ 2'-0" H. TRANSOM
116	A	3'-0" x 7'-0" x 1 3/4"	* S.C. WOOD	———	H.M.	4/ADE-01	5/ADE-01	6/ADE-01	———		———	———	* PAINT GRADE WOOD VENEER
UTILITY BUILDING													
120	E	PR. 3'-0" x 7'-0" x 1 3/4"	H.M.	———	* H.M.	13/ADE-01	14/ADE-01	15/ADE-01	ALUM.		———	———	* 4" HEAD

GENERAL NOTES:

1. DOOR LOUVER – 10"x10", NON VISION

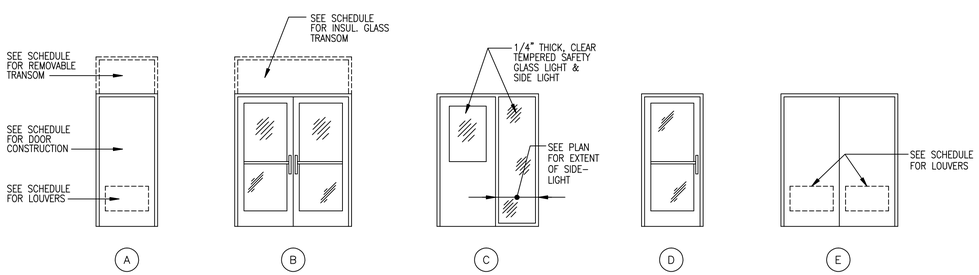

DOOR TYPES

N.T.S.

J.A. JONES OF THE CAROLINAS, INC. — J.A. JONES CONSTRUCTION COMPANY

LOCKWOOD GREENE Consulting Engineers and Constructors

DSGN P. BLACKBURN | DR N. BABB | CHK AB / DY

SUPV. P.S.S. | CH ENGR P. BLACKBURN

SUBMITTED BY (FIRM MEMBER TITLE): V.P. | DATE 03-MAY-1999

TECHNICAL BRANCH

FPE

DRAWING REVISIONS

Rev.	Description	Prep By	Date	Apprvd.
0	FINAL DESIGN SUBMITTAL	NGB	5/3/99	PB/LB
1	ISSUE FOR RECORD	NGB	6/1/01	LB/DT

BEAUFORT, S.C.

BACHELOR ENLISTED QUARTERS - PHASE IV

ARCHITECTURAL

DOOR SCHEDULE & DOOR TYPES

MCAS

APPROVED

DATE

EFD FOR COMMANDER, NAVFAC

Naval Facilities Engineering Command

Southern Division

Charleston, South Carolina

RECORD DRAWING DATE 01-JUN-01

CODE I.D. NO. 80091

DRAWING SIZE: D

SPEC. NO.06-98-0690

CONSTRN. CONTR. NO. N62467-98-D-0690

NAVFAC DRAWING NO. 5364400

SHEET 28 OF 34

ASC-02

$$$$ USERNAME $$$$ $$$$ DATE&TIME $$$$ $$$$ DESIGN FILE NAME $$$$

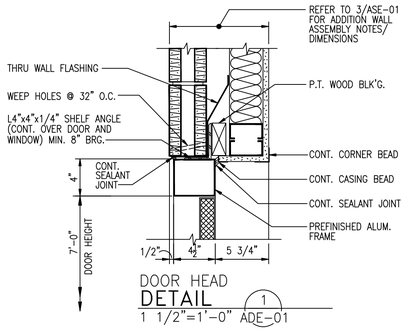

DOOR HEAD
DETAIL 1
1 1/2"=1'-0" ADE-01

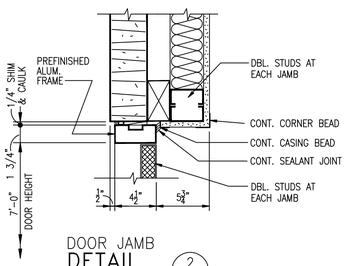

DOOR JAMB
DETAIL 2
1 1/2"=1'-0" ADE-01

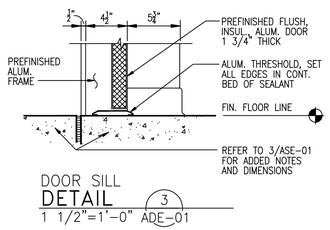

DOOR SILL
DETAIL 3
1 1/2"=1'-0" ADE-01

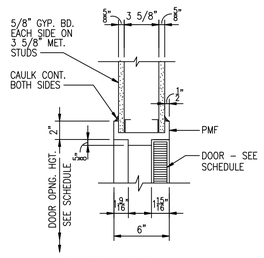

DOOR HEAD
DETAIL 4
1 1/2"=1'-0" ADE-01

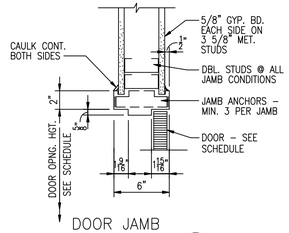

DOOR JAMB
DETAIL 5
1 1/2"=1'-0" ADE-01

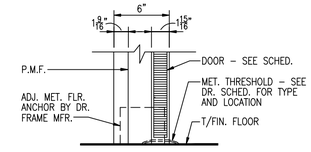

DOOR SILL
DETAIL 6
1 1/2"=1'-0" ADE-01

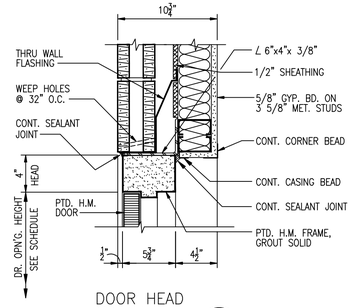

DOOR HEAD
DETAIL 7
1 1/2"=1'-0" ADE-01

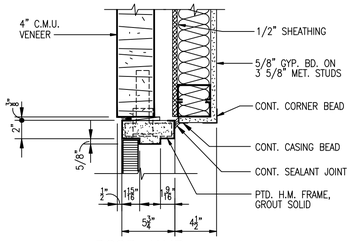

DOOR JAMB
DETAIL 8
1 1/2"=1'-0" ADE-01

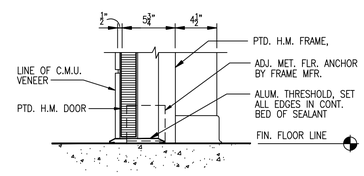

DOOR SILL
DETAIL 9
1 1/2"=1'-0" ADE-01

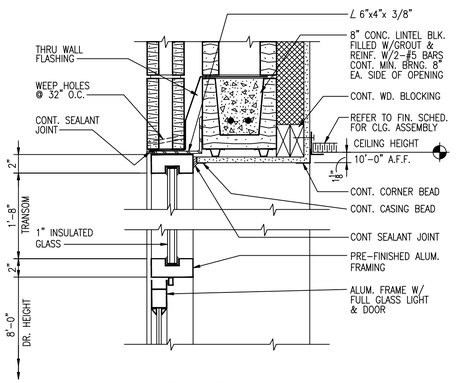

DOOR HEAD
DETAIL 10
1 1/2"=1'-0" ADE-01

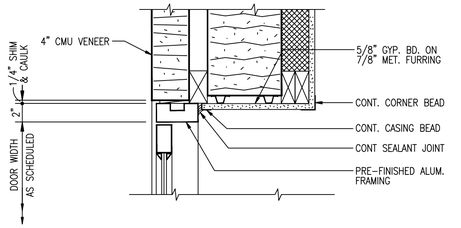

DOOR JAMB
DETAIL 11
1 1/2"=1'-0" ADE-01

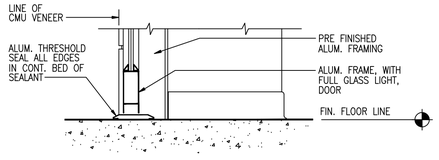

DOOR SILL
DETAIL 12
1 1/2"=1'-0" ADE-01

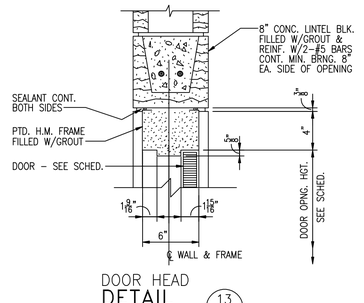

DOOR HEAD
DETAIL 13
1 1/2"=1'-0" ADE-01

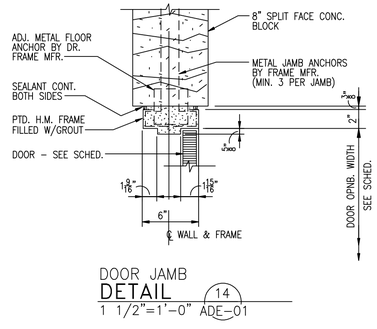

DOOR JAMB
DETAIL 14
1 1/2"=1'-0" ADE-01

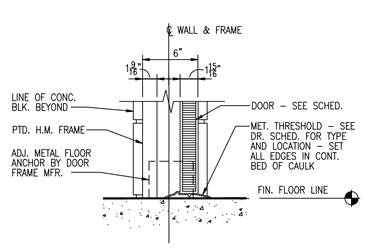

DOOR SILL
DETAIL 15
1 1/2"=1'-0" ADE-01

0 1 2
1 1/2"=1'-0"

LOCKWOOD GREENE
Consulting Engineers, Inc.
J.A. JONES
OF THE CAROLINAS
CONSTRUCTION MANAGEMENT

DSGN	P. BLACKBURN	DR	N. BABB	CHK	AB / DY
SUPV.	F.S.S.	CH ENGR.	P. BLACKBURN		
SUBMITTED BY (PRIN MEMBER-TITLE)		L.D. BOTT		DATE	03-MAY-1999
TECHNICAL BRANCH					

DRAWING REVISIONS

Rev.	Description	Prep By	Date	Apprvd.
0	FINAL DESIGN SUBMITTAL	NGB	5/3/99	PB/LB
1	ISSUE FOR RECORD	NGB	6/1/01	LB/DT

EFD FOR COMMANDER, NAVFAC

MCAS
BEAUFORT, S.C.
BACHELOR ENLISTED QUARTERS - PHASE IV
ARCHITECTURAL
DOOR DETAILS
APPROVED
DATE

Naval Facilities Engineering Command
Southern Division
Charleston, South Carolina

RECORD DRAWING DATE
01-JUN-01
CODE I.D. NO. 80091
DRAWING SIZE: D
SPEC. NO.06-98-0690
CONSTRN. CONTR. NO. N62467-98-D-0690
NAVFAC DRAWING NO. 5364401
SHEET 29 OF 34
ADE-01

$$$$ USERNAME $$$$ $$$$ DATE&TIME $$$$ $$$$ DESIGN FILE NAME $$$$

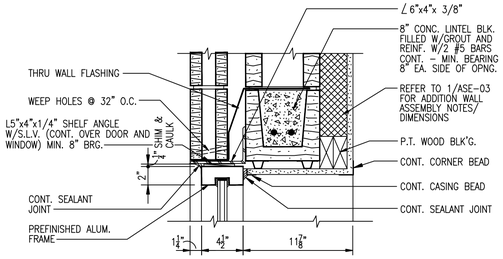

WINDOW HEAD
DETAIL 1
1 1/2"=1'-0" ADE-02

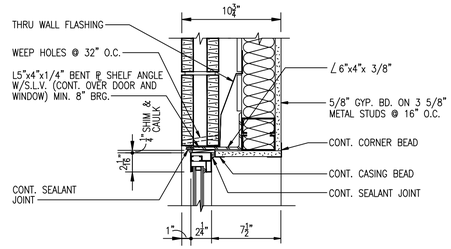

WINDOW HEAD
DETAIL 4
1 1/2"=1'-0" ADE-02

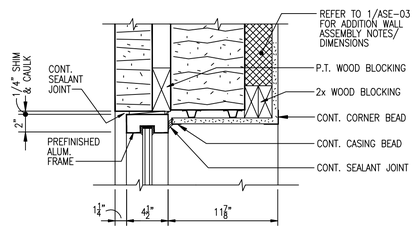

WINDOW JAMB
DETAIL 2
1 1/2"=1'-0" ADE-02

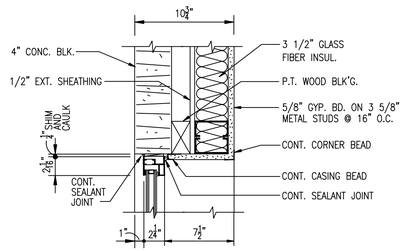

WINDOW JAMB
DETAIL 5
1 1/2"=1'-0" ADE-02

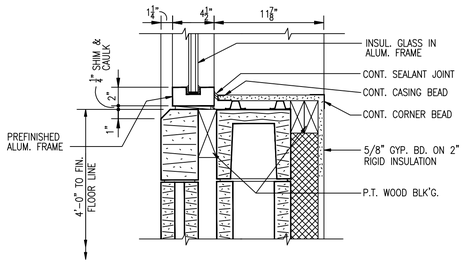

WINDOW SILL
DETAIL 3
1 1/2"=1'-0" ADE-02

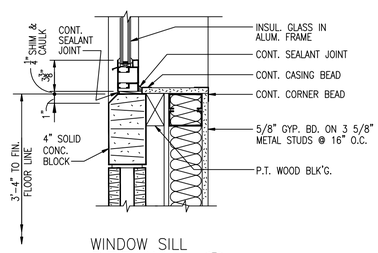

WINDOW SILL
DETAIL 6
1 1/2"=1'-0" ADE-02

0 1 2
1 1/2"=1'-0"

J.A. JONES
OF THE CAROLINAS
LOCKWOOD GREENE
Consulting Engineers and Constructors

DSGN	P. BLACKBURN	DR	N. BABB	CHK	AB / DY
SURV	F.S.S.	CH ENGR	P. BLACKBURN		
SUBMITTED BY (PRIN MEMBER-IN-CHG):				DATE	03-MAY-1999
TECHNICAL BRANCH					
FPE					

DRAWING REVISIONS

Rev.	Description	Prep By	Date	Apprvd.
0	FINAL DESIGN SUBMITTAL	NGB	5/3/99	PB/LB
1	ISSUE FOR RECORD	NGB	6/1/01	LB/DT

MCAS
BEAUFORT, S.C.
BACHELOR ENLISTED QUARTERS - PHASE IV
ARCHITECTURAL
DOOR & WINDOW DETAILS

EFD FOR COMMANDER, NAVFAC
DATE
APPROVED

Naval Facilities Engineering Command
Southern Division
Charleston, South Carolina

RECORD DRAWING DATE
01-JUN-01
CODE I.D. NO. 80091
DRAWING SIZE: D
SPEC. NO. 06-98-0690
CONSTRN. CONTR. NO. N62467-98-D-0690
NAVFAC DRAWING NO. 5364402
SHEET 30 OF 34
ADE-02

$$$$ USERNAME $$$$ $$$$ DATE&TIME $$$$ $$$$ DESIGN FILE NAME $$$$

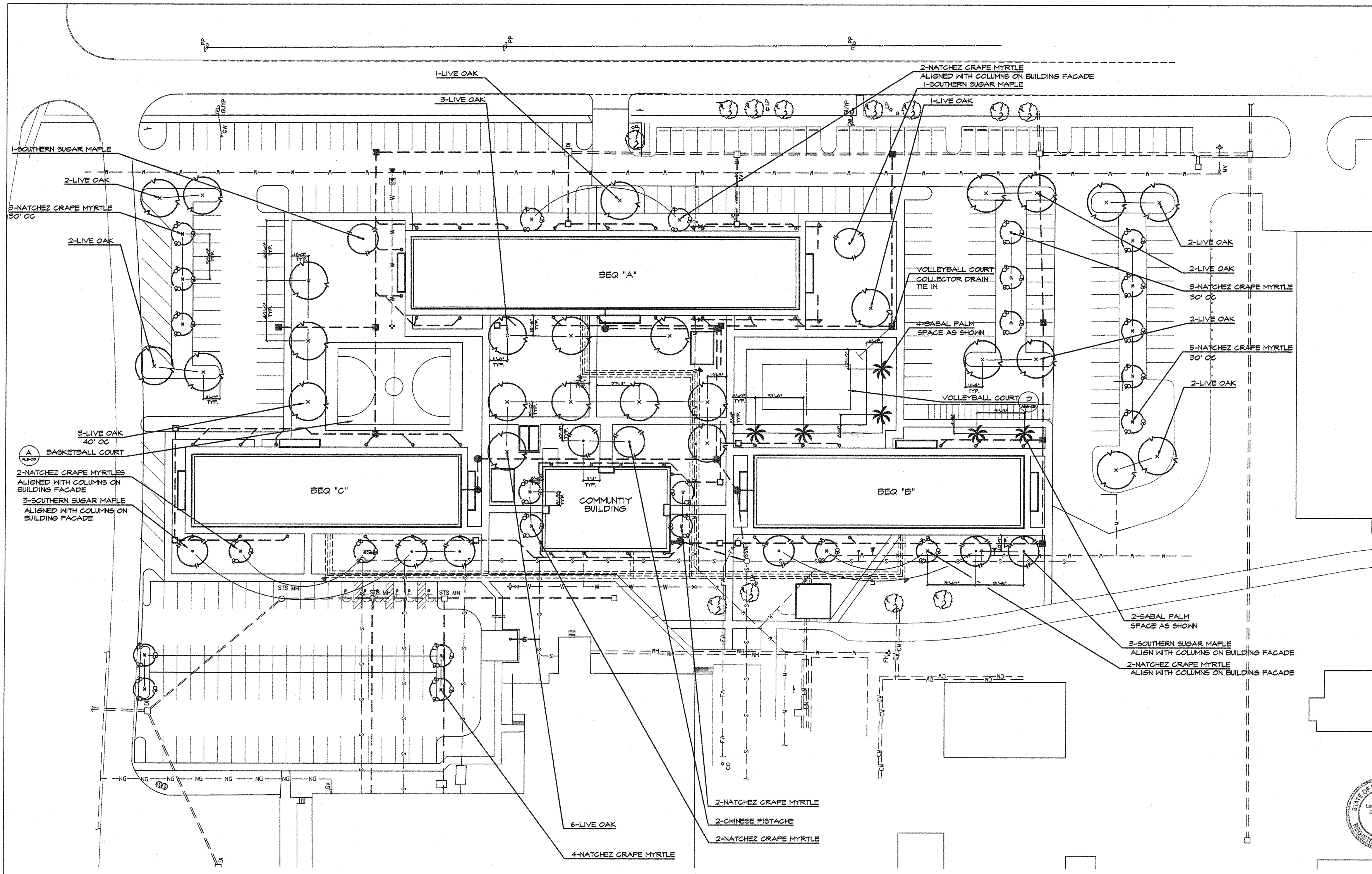

LANDSCAPE DEVELOPMENT PLAN

A ALS-01 1"=30'

HGOR
HUGHES | GOOD | O'LEARY & RYAN
11 EXECUTIVE PARK DRIVE • SUITE 100 • ATLANTA • GEORGIA 30329
P 404|248|1900 F 404|248|1092 EMAIL hgor@hgor.com
LANDSCAPE ARCHITECTURE • PLANNING • URBAN DESIGN • ENVIRONMENTAL SERVICES

J.A. JONES MANAGEMENT SERVICES
J.A. JONES OF THE CAROLINAS
LOCKWOOD GREENE
Consulting·Design·Construction

DSGN	DR	CHK
SMK	SM	RSR
SUPV	CH ENGR	DATE
SUBMITTED BY (FIRM MEMBER-TITLE):		
TECHNICAL BRANCH		
FPE		

DRAWING REVISIONS

Rev.	Description	Prep By	Date	Apprvd.
0	FINAL DESIGN SUBMITTAL	SMK	3 May 99	RR/RSR
1	ISSUE FOR RECORD	SMK	6-1-01	LB/DT

MCAS BEAUFORT, S.C.
BACHELOR ENLISTED QUARTERS - PHASE IV
ARCHITECTURAL
LANDSCAPE PLAN
APPROVED
DATE
EFD FOR COMMANDER, NAVFAC

Naval Facilities Engineering Command
Southern Division
Charleston, South Carolina

State of South Carolina
REGISTERED LANDSCAPE ARCHITECT
No. 639
ROBERT S. RYAN

STATE OF SOUTH CAROLINA
Lockwood Greene Engineers, Inc.
Spartanburg
B-74053
REGISTERED ARCHITECT

RECORD DRAWING DATE	6-1-01
CODE I.D. NO.	80091
DRAWING SIZE:	D
SPEC. NO.	06-98-0690
CONSTRN. CONTR. NO.	N62467-98-D-0690
NAVFAC DRAWING NO.	5364403
SHEET	31 OF 34
	ALS-01

3 - Mar - 1999 Q:\Acad\1998\98353LD1.dwg

3 - Mar - 1999 O:\Acad\1998\9835SLD2.dwg

LANDSCAPE DEVELOPMENT PLAN

A ALS-02 1"=30'

1"=30'-0"
30 20 10 0 15 30 45 60

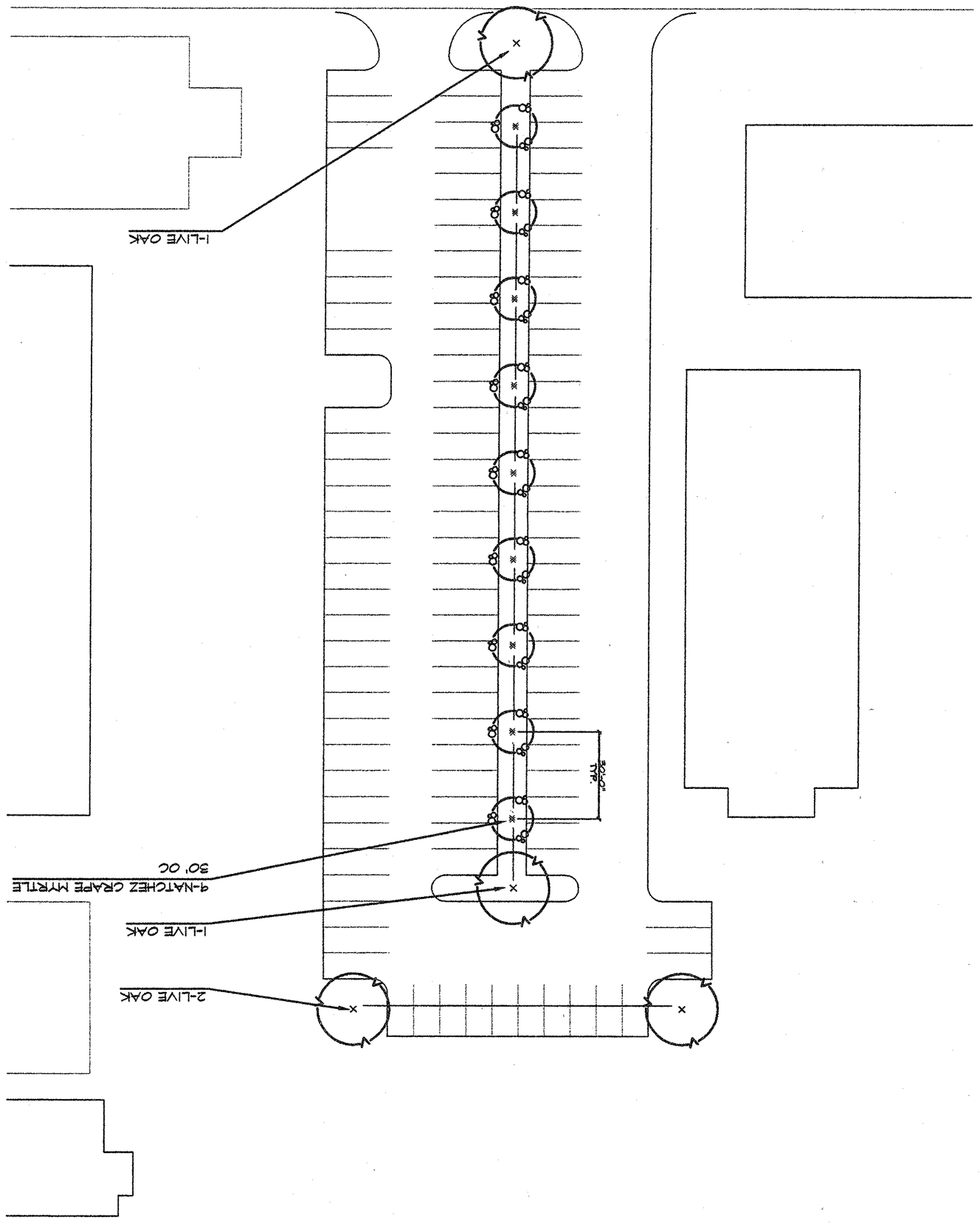

NORTH

HGOR
HUGHES | GOOD | O'LEARY & RYAN
11 EXECUTIVE PARK DRIVE • SUITE 100• ATLANTA • GEORGIA 30329
P 404|315|7960 F 404|315|1093 EMAIL hgor@hgor.com
LANDSCAPE ARCHITECTURE • PLANNING• URBAN DESIGN • ENVIRONMENTAL SERVICES

ALS-02
SHEET 23 OF 27
NAVFAC DRAWING NO. 2554404
CONSTRN. CONTR. NO. N62467-98-D-0690
SPEC. NO.06-98-0690
DRAWING SIZE: D
CODE I.D. NO. 80091
RECORD DRAWING DATE 6-1-01

STATE OF SOUTH CAROLINA
Lockwood Greene Engineers, Inc
Stephen Long
B-7460

STATE OF SOUTH CAROLINA
REGISTERED LANDSCAPE ARCHITECT
No. 639
ROBERT A. RYAN

Naval Facilities Engineering Command
Southern Division
Charleston, South Carolina

MCAS
BEAUFORT, S.C.

BACHELOR ENLISTED QUARTERS - PHASE IV

ARCHITECTURAL
LANDSCAPE PLAN

DRAWING REVISIONS

Rev.	Description	Prep By	Date	Apprvd
0	FINAL DESIGN SUBMITTAL	SNK	[illegible]	
1	ISSUE FOR RECORD	SNK	6-1-01	[illegible]

APPROVED

DESIGN SNK SUPV
DR SN CH ENGR CHK FGR
SUBMITTED BY (FIRM MEMBER--TITLE): DATE
TECHNICAL BRANCH
FPE

J.A. JONES MANAGEMENT SERVICES
J.A. JONES OF THE CAROLINAS
LOCKWOOD GREENE
Consulting•Design•Construction
Atlanta, Georgia

DATE
EFD FOR COMMANDER, NAVFAC

GENERAL NOTES:

1. SEE SPECIFICATIONS FOR DRAINAGE TEST REQUIREMENTS PRIOR TO PLANTING. SEC. 02900.
2. DO NOT ALLOW AIR POCKETS TO FORM WHEN BACKFILLING.
3. IMMEDIATELY SOAK WITH WATER.
4. DO NOT BREAK ROOTBALL.

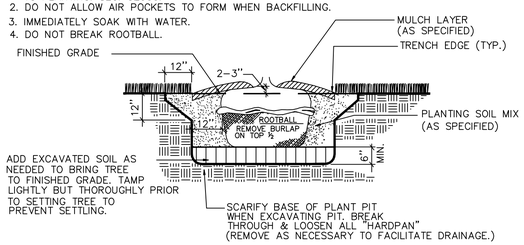

PLANTING PROCEDURE

1. EXCAVATE ROOTBALL PIT.
2. ADD EXCAVATED SOIL & TAMP. SET TREE SUCH THAT TOP OF ROOTBALL IS 2-3" HIGHER THAN FINISHED GRADE.
3. BACKFILL W/ SOIL MIX & "WATER IN".
4. COMPLETE BACKFILLING, CONSTRUCT TRENCH EDGE & ADD SPECIFIED MULCH.
5. STAKE & GUY SECURELY.

A ALS-03 TYPICAL TREE ROOTBALL PIT

N.T.S. LD1

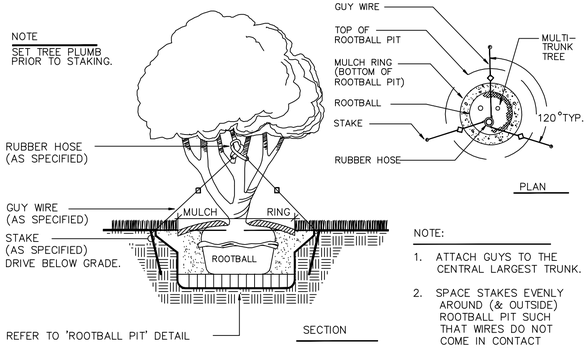

NOTE:

1. ATTACH GUYS TO THE CENTRAL LARGEST TRUNK.
2. SPACE STAKES EVENLY AROUND (& OUTSIDE) ROOTBALL PIT SUCH THAT WIRES DO NOT COME IN CONTACT WITH ANY TRUNK OR BRANCH.

C ALS-03 MULTI-TRUNK TREE STAKING AND GUYING

N.T.S. LD9

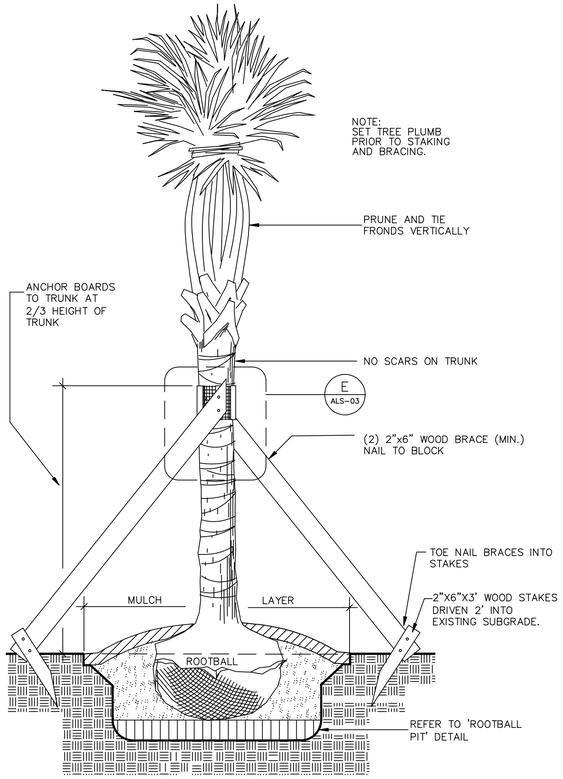

D ALS-03 PALM STAKING AND BRACING DETAIL

N.T.S. LD 15

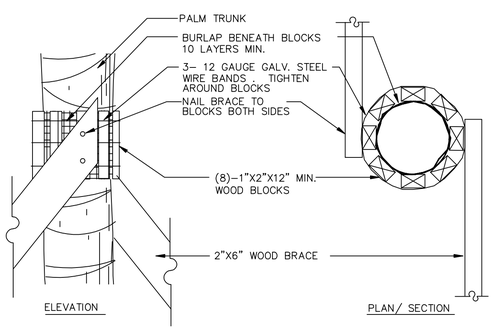

E ALS-03 PALM BRACING DETAILS

N.T.S. LD 16

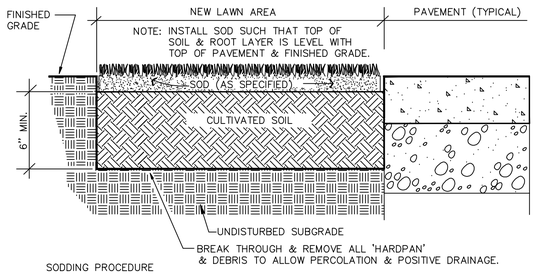

SODDING PROCEDURE

1. THE GENERAL CONTRACTOR WILL PROVIDE GRADES TO (+/- .20) OF A FOOT OF PROPOSED GRADES.
2. CULTIVATE ENTIRE AREA TO A MINIMUM 6" DEPTH. HANDRAKE SMOOTH.
3. ADD ADDITIVES (AS PER SOIL TEST ANALYSIS) & ROTOTILL.
4. WATER AREA TO BE SODDED PRIOR TO LAYING SOD.
5. LAY & ROLL SOD. WATER THOROUGHLY.

F ALS-03 SOD INSTALLATION

N.T.S. LD44

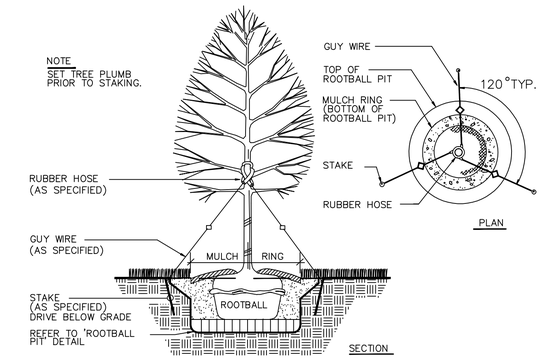

B ALS-03 TREE STAKING AND GUYING

N.T.S. LD5

PLANT LIST								
Note .	Quantity	Botanical Name	Common Name	Caliper	Height	Spread	Root	Comment
	8	Acer barbatum	Southern Sugar Maple	3.5-4"	14-16'	7-8'	B&B	Straight trunk; dense, uniform branching; matched
	2	Pistacia chinensis	Chinese Pistache	5-6"			B&B	Straight trunk; dense, uniform branching; matched
	30	Quercus virginiana	Live Oak	5-6"	14-16'	9-10'	B&B/cont.	Straight trunk; branching begins above 5'
	34	Lagerstroemia x 'Natchez'	Natchez Crape Myrtle		10-12'	7-8'	B&B	Multi-trunk (3-5 trunks); well pruned (no straight-whip trunks)
	6	Sabal palmetto	Sabal Palm		18-20'	5-6'	B&B	Booted; Clean of dead fronds
	74030	Cynadon dactylon 'Sahara'	Sahara Bermuda Grass				Sod	Certified pure; free of weed seed

GENERAL PLANTING NOTES:

1. ALL PLANTS MUST BE HEALTHY, VIGOROUS MATERIAL; FREE OF PESTS & DISEASES.
2. ALL PLANTS MUST BE CONTAINER-GROWN (CONT.) OR BALLED & BURLAPPED (B&B) AS INDICATED IN THE PLANT LIST.
3. ALL TREES MUST BE STRAIGHT TRUNKED, FULL HEADED & MEET ALL REQUIREMENTS SPECIFIED.
4. ALL PLANTS ARE SUBJECT TO THE APPROVAL OF THE LANDSCAPE ARCHITECT & THE OWNER BEFORE, DURING & AFTER INSTALLATION.
5. ALL TREES MUST BE GUYED OR STAKED AS SHOWN IN THE DETAILS.
6. ALL PLANTS & PLANTING AREAS MUST BE COMPLETELY MULCHED AS SPECIFIED.
7. PRIOR TO CONSTRUCTION, THE LANDSCAPE CONTRACTOR SHALL BE RESPONSIBLE FOR LOCATING ALL UNDERGROUND UTILITIES & SHALL AVOID DAMAGE TO ALL UTILITIES DURING THE COURSE OF THE WORK. THE LANDSCAPE CONTRACTOR IS RESPONSIBLE FOR REPAIRING ANY & ALL DAMAGE TO UTILITIES, STRUCTURES, SITE APPURTENANCES, ETC. WHICH OCCUR AS A RESULT OF THE LANDSCAPE CONSTRUCTION.
8. THE LANDSCAPE CONTRACTOR IS RESPONSIBLE FOR VERIFYING ALL QUANTITIES SHOWN ON THESE PLANS BEFORE PRICING THE WORK.
9. THE LANDSCAPE CONTRACTOR IS RESPONSIBLE FOR FULLY MAINTAINING ALL PLANTING (INCLUDING, BUT NOT LIMITED TO: WATERING, SPRAYING, MULCHING, FERTILIZING, ETC.) OF PLANTING AREAS & LAWNS UNTIL THE WORK IS ACCEPTED IN TOTAL BY THE LANDSCAPE ARCHITECT AND THE OWNER.
10. THE LANDSCAPE CONTRACTOR SHALL COMPLETELY GUARANTEE ALL PLANT MATERIAL FOR A PERIOD OF ONE (1) YEAR BEGINNING AT THE DATE OF SUBSTANTIAL COMPLETION. THE LANDSCAPE CONTRACTOR SHALL PROMPTLY MAKE ALL REPLACEMENTS BEFORE OR AT THE END OF THE GUARANTEE PERIOD (AS DIRECTED BY THE OWNER).
11. THE LANDSCAPE ARCHITECT WILL APPROVE THE STAKED LOCATION OF ALL PLANT MATERIAL PRIOR TO INSTALLATION.
12. AFTER BEING DUG AT THE NURSERY SOURCE, ALL TREES IN LEAF SHALL BE ACCLIMATED FOR TWO (2) WEEKS UNDER A MIST SYSTEM PRIOR TO INSTALLATION.
13. ANY PLANT MATERIAL WHICH DIES, TURNS BROWN OR DEFOLIATES (PRIOR TO TOTAL ACCEPTANCE OF THE WORK) SHALL BE PROMPTLY REMOVED FROM THE SITE & REPLACED WITH MATERIAL OF THE SAME SPECIES, QUANTITY, SIZE AND MEETING ALL PLANT LIST SPECIFICATIONS.
14. STANDARDS SET FORTH IN 'AMERICAN STANDARDS FOR NURSERY STOCK' REPRESENT GUIDELINE SPECIFICATIONS AND CONSTITUTE MINIMUM QUALITY REQUIREMENTS OF THE PLANT MATERIAL FOR THIS PROJECT.
15. FOR TREE PLANTING REFER TO DETAILS — A ALS-03, B ALS-03, G ALS-03
16. FOR FLOWERING TREE PLANTING REFER TO DETAILS — A ALS-03, C ALS-03, G ALS-03
17. FOR PALM TREE PLANTING REFER TO DETAILS — A ALS-03, D ALS-03, E ALS-03, G ALS-03

PLANTING SOIL MIX NOTES:

1. THE LANDSCAPE CONTRACTOR SHALL FURNISH TOPSOIL; TOPSOIL MUST BE APPROVED BY THE LANDSCAPE ARCHITECT. REFER TO SPECIFICATION SECTION 02900 FOR TOPSOIL REQUIREMENTS.
2. THE LANDSCAPE CONTRACTOR SHALL SUPPLY ALL PLANTING SOIL MIX.
3. THE PLANTING SOIL MIX MUST APPROVED BY THE LANDSCAPE ARCHITECT PRIOR TO ANY BACKFILLING.
4. THE TYPICAL PLANTING SOIL MIX FOR ON-GRADE PLANTINGS (TREES, SHRUBS & GROUNDCOVERS) SHALL CONSIST OF THE FOLLOWING UNLESS OTHERWISE INDICATED ON THE DRAWINGS:
   - 60% TOPSOIL (AS SPECIFIED)
   - 40% PREPARED ADDITIVES (BY VOLUME AS FOLLOWS):
     2 PARTS HUMUS AND/OR PEAT
     1 PART STERILIZED COMPOSTED COW MANURE
     1 PART SHREDDED PINE BARK (BARK PIECES BETWEEN 1/2 INCH AND 2 INCHES IN LENGHT)
   - COMMERCIAL FERTILIZER AS RECOMMENDED IN SOIL REPORT.
   - LIME AS RECOMMENDED IN SOIL REPORT.

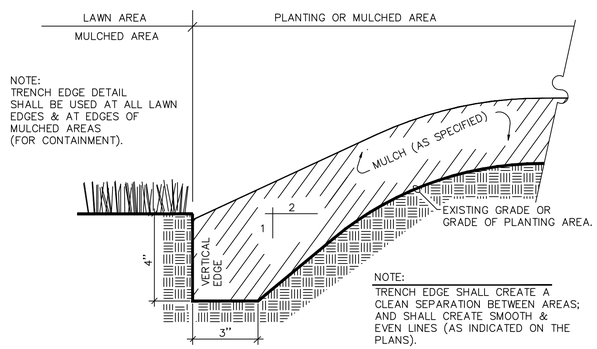

NOTE:
TRENCH EDGE SHALL CREATE A CLEAN SEPARATION BETWEEN AREAS; AND SHALL CREATE SMOOTH & EVEN LINES (AS INDICATED ON THE PLANS).

G ALS-03 TRENCH EDGE DETAIL

N.T.S. LD47

HGOR
HUGHES | GOOD | O'LEARY & RYAN
11 executive park drive • suite 100•atlanta • georgia 30329
p 404|248|1960 f 404|248|1092 email hgo@hgor.com
LANDSCAPE ARCHITECTURE•PLANNING•URBAN DESIGN•ENVIRONMENTAL SERVICES

J.A. JONES OF THE CAROLINAS
J.A. JONES ENVIRONMENTAL SERVICES
LOCKWOOD GREENE Consulting•Design•Construction

FINAL SUBMITTAL

MCAS BEAUFORT, S.C.
BACHELOR ENLISTED QUARTERS - PHASE IV
Architectural
Landscape Details

Naval Facilities Engineering Command
Southern Division
Charleston, South Carolina

ALS-03

$$$$ USERNAME $$$$ $$$$ DATE&TIME $$$$ $$$$ DESIGN FILE NAME $$$$

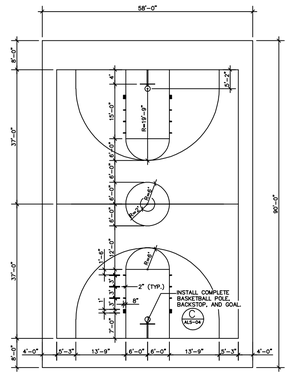

NOTES:

- ALL LINESTRIPPING SHALL BE 2" WIDE UNLESS OTHERWISE INDICATED.
- DIMENSIONS AT STRIPE CENTERLINE

A ALS-04 — BASKETBALL COURT LAYOUT AND LINESTRIPING PLAN
SCALE: 1" = 20'-0" RD42

NOTES:

- SUBBASE MATERIAL: GRADED MIXTURE OF NATURAL OR CRUSHED GRAVEL COMPLYING WITH ASTM D 2940
- ASPHALT-AGGREGATE MIXTURE: PLANT MIXED, HOT LAID, ASPHALT-AGGREGATE MIXTURE, ASTM D 3515
- FINISH PAVEMENT MATERIALS:
  A. BASKETBAL COURT BINDER: ACRYLIC BONDING LIQUID.
  B. FILLER COAT: 100 PERCENT ACRYLIC EMULSION AND SAND.
  C. FILLED COLORCOAT: 100 PERCENT ACRYLIC EMULSION, PIGMENTS AND SAND.
- COLORCOAT: 100 PERCENT ACRYLIC EMULSION, HIGHLY PIGMENTED.
- LINE MARKING PAINT: 100 PERCENT ACRYLIC EMULSION FOR USE ON BASKETBALL COURTS.

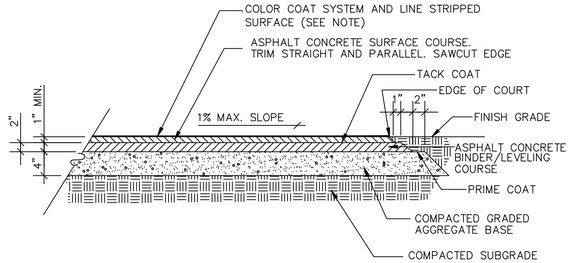

B ALS-04 — BASKETBALL COURT PAVEMENT SECTION
SCALE: 1" = 1'-0" RD41

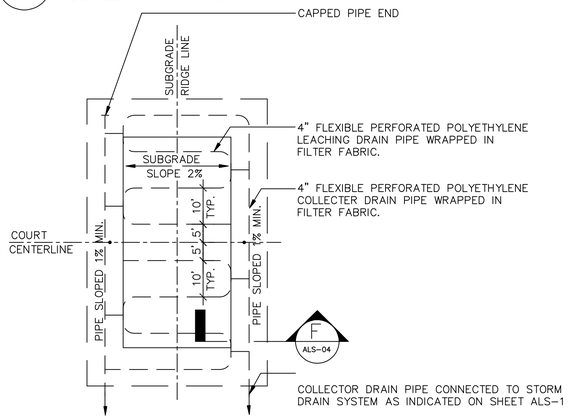

E ALS-04 — VOLLEYBALL COURT DRAINAGE PLAN
SCALE: 1" = 20'-0" RD68

NOTE:

- OFFSET BACKSTOP AND GOAL WITH CHAIN MESH NET.
- INSTALL 2 BACKSTOPS PER COURT.

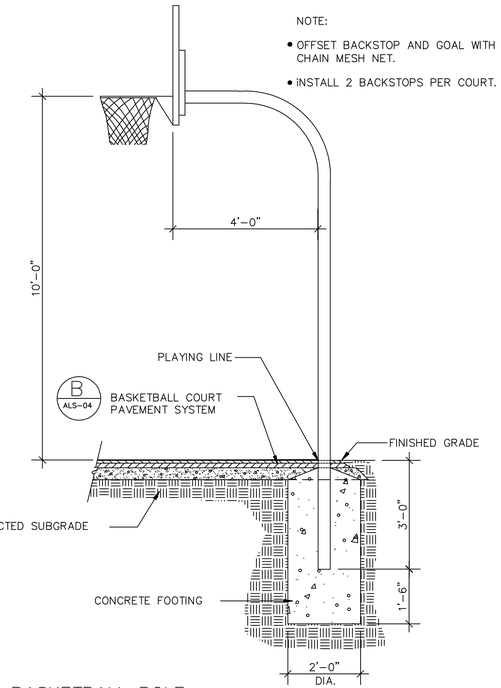

C ALS-04 — BASKETBALL POLE, BACKSTOP, AND GOAL SECTION
SCALE: 1/2" = 1'-0" RD54

D ALS-04 — VOLLEYBALL COURT LAYOUT PLAN
SCALE: 1" = 20'-0" RD66

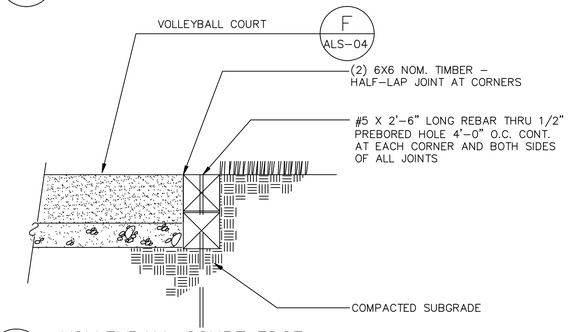

G ALS-04 — VOLLEYBALL COURT EDGE
SCALE: N.T.S. RD108

NOTES:

- SAND MATERIAL: CLEAN, SHARP, COURSE, SAND FREE FROM CLAY LOAM AND VEGETATIVE MATTER; ASTM C 33.
- SAND COLOR: WASHED WHITE OR YELLOW COLOR WITH NO BLACK OR BROWN PARTICLES

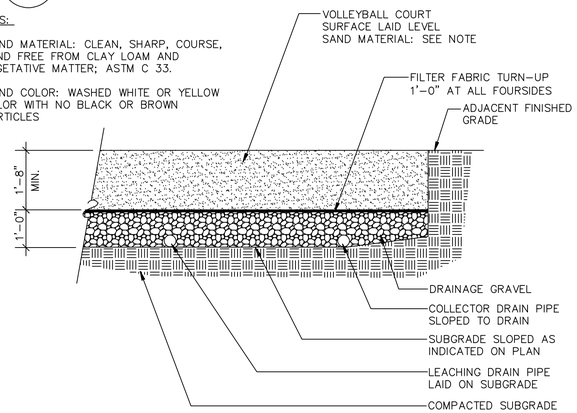

F ALS-04 — VOLLEYBALL COURT SURFACE SECTION
SCALE: 1/2" = 1'-0" RD75

SITE AMENITY	MANUFACTURER/MODEL NUMBER	REPRESENTATIVE
BASKETBALL POLE	GAME TIME (800) 235-2440 MODEL # 460	CUNNINGHAM ASSOCIATES, INC. PO BOX 240981 CHARLOTTE, NORTH CAROLINA (800) 438 - 2780
BASKEBALL BACKBOARD	GAME TIME (800) 235-2440 MODEL # 851	CUNNINGHAM ASSOCIATES, INC. PO BOX 240981 CHARLOTTE, NORTH CAROLINA (800) 438 - 2780
BASKETBALL GOAL AND NET	GAME TIME (800) 235-2440 MODEL # 423	CUNNINGHAM ASSOCIATES, INC. PO BOX 240981 CHARLOTTE, NORTH CAROLINA (800) 438 - 2780
VOLLEYBALL POST	GAME TIME (800) 235-2440 MODEL # 137	CUNNINGHAM ASSOCIATES, INC. PO BOX 240981 CHARLOTTE, NORTH CAROLINA (800) 438 - 2780
VOLLEYBALL NET	GAME TIME (800) 235-2440 MODEL # 739	CUNNINGHAM ASSOCIATES, INC. PO BOX 240981 CHARLOTTE, NORTH CAROLINA (800) 438 - 2780

NOTES:

- ALTERNATE MANUFACTURERS/SUPPLIER PRODUCTS SHALL MATCH THOSE OF THE MANUFACTURER/SUPPLIER LISTED
- PRODUCT SUBSTITUTION REQUESTS SHALL BE SUBMITTED BY THE CONTRACTOR WITHIN 15 DAYS AFTER COMMENCEMENT OF THE WORK. SUBMIT PRODUCT DATA TO LANDSCAPE ARCHITECT FOR APPEAL PRIOR TO ORDERING, PURCHASING, AND INSTALLATION OF THE PRODUCT.

H ALS-04 — SITE AMENTITIES SCHEDULE
98349MN1

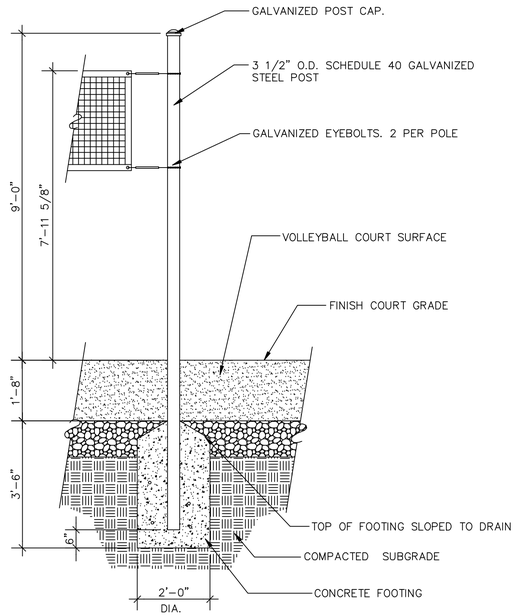

I ALS-04 — VOLLEYBALL POLE SECTION
SCALE: 1/2" = 1'-0" RD67

HGOR
HUGHES | GOOD | O'LEARY & RYAN
11 executive park drive • suite 100•atlanta • georgia 30329
p 404[248]1960 f 404[248]1092 email hga@hgor.com
LANDSCAPE ARCHITECTURE• PLANNING•URBAN DESIGN•ENVIRONMENTAL SERVICES

J.A. JONES — J.A. JONES MANAGEMENT SERVICES — LOCKWOOD GREENE — Consulting • Design • Construction

FINAL SUBMITTAL

MCAS BEAUFORT, S.C.
BACHELOR ENLISTED QUARTERS - PHASE IV
Architectural
Recreation Details

Naval Facilities Engineering Command
Southern Division
Charleston, South Carolina

ALS-04

$$$$ USERNAME $$$$ $$$$ DATE&TIME $$$$ $$$$ DESIGN FILE NAME $$$$

ABBREVIATIONS AND SYMBOLS

ABOVE FINISH FLOOR	A.F.F. OR AFF
AMERICAN CONCRETE INSTITUTE	ACI
AMERICAN INSTITUTE OF STEEL CONSTRUCTION	AISC
AMERICAN NATIONAL STANDARDS INSTITUTE	ANSI
AMERICAN WELDING SOCIETY	AWS
ANCHOR BOLT	AB
AND	&
ARCHITECTURAL	ARCH
AT	@
BASE PLATE	BP
BEAM	BM
BEARING	BRG
BELOW FINISH FLOOR	B.F.F. OR BFF
BOTTOM	BOT
BOTTOM OF	B/
BOTTOM AND TOP	B&T
BUILDING	BLDG
CAMBER	C
CENTER LINE	CL
CLEAR	CLR
COLUMN	COL
CONCRETE	CONC
CONCRETE MASONRY UNIT	CMU
CONNECTION, CONNECT	CONN
CONTINUOUS	CONT
CONTROL JOINT	CJ
CONSTRUCTION JOINT	CJT
DEAD LOAD	DL
DEFORMED BAR ANCHOR	DBA
DETAIL	DET
DIAMETER	DIA
DIMENSION	DIM
DITTO	do
DOWN	DN
DRAWING	DWG
EACH	EA
EACH FACE	EF
EACH SIDE	ES
EACH WAY	EW
ELEVATION	EL
EQUAL	EQ
EQUIPMENT	EQUIP
EXPANSION	EXP
FAR SIDE	FS
FINISHED FLOOR	FIN FLR
FOOTING	FTG
FOUNDATION	FDN
FLOOR DRAIN	FD
GAGE	GA
GALVANIZED	GLV
GIRT LINE	GL
GRATING	GRTG
GRADED AGGREGATE BASE	GAB
HANDRAIL	HR
HIGH POINT	HP
HIGH STRENGTH	HS
HORIZONTAL	HORZ
INSULATION	INSUL
JOINT	JT
KIP	K
KIPS PER SQUARE INCH	KSI
LIVE LOAD	LL
LONG	LG
LOW POINT	LP
LONG LEG VERTICAL	LLV
MAXIMUM	MAX
MINIMUM	MIN
MISCELLANEOUS	MISC
MOMENT CONNECTION	MC
NOT TO SCALE	NTS
NUMBER	#
OCCUPATIONAL SAFETY AND HEALTH ADMINISTRATION	OSHA
ON CENTER	OC
OPENING	OPNG
PILE CAP	PC
PLATE	PL
POUNDS PER SQUARE FOOT	PSF
POUNDS PER SQUARE INCH	PSI
PRECAST BEAM	PB
PREMOULD JOINT FILLER	PJF
PROJECTION	PROJ
RAIL ROAD	RR
RADIUS	RAD
REINFORCING/REINFORCE	REINF
REQUIRED	REQD
RISER	R
SCHEDULE	SCHED
SECTION	SECT
SHEET	SHT
SIMILAR	SIM
SPACES	SPA
SPECIFICATION	SQ
SQUARE	SS
STAINLESS STEEL	STIFF
STIFFENER	STRUCT
STRUCTURAL	STD
STANDARD	THRD
THREAD	THK
THICK	T&B
TOP AND BOTTOM	T/CONC
TOP OF CONCRETE	T/
TOP OF	T/FTG
TOP OF FOOTING	T/STL
TOP OF STEEL	T
TREAD	TYP
TYPICAL	UN
UNLESS NOTED	VERT
VERTICAL	VB
VERTICAL BRACING	WWF
WELDED WIRE FABRIC	W/
WITH	WL
WORK LINE	WP
WORKING POINT	

DESIGN CRITERIA

BACHELOR ENLISTED QUARTERS

ROOF STRUCTURAL DEAD LOADS

STEEL DECKING	5 PSF
CEILING	2 PSF
STEEL FRAMING	ACTUAL

ROOF MECHANICAL / ELECTRICAL DEAD LOADS

SPRINKLERS	1/2 PSF
PIPING, DUCTS, ELECTRICAL, MISC..	2 1/2 PSF
HVAC EQUIPMENT	ACTUAL

ROOF LIVE LOADS

20 PSF WITH REDUCTIONS PER UBC 1994

ELEVATED FLOOR DEAD LOADS

6" PRECAST	49 PSF
CEILING	2 PSF
STEEL FRAMING	ACTUAL
2" TOPPING	25 PSF

ELEVATED FLOOR LIVE LOAD

COORIDORS	100 PSF
PARTITIONS	20 PSF
ROOMS	40 PSF
2ND/3RD FLR MECH/BREEZEWAY	125 PSF
OUTSIDE WALKWAYS	100 PSF

ATTIC FLOOR

LIVE LOAD ..... 90 PSF

GROUND FLOOR SLAB

LIVE LOAD ..... 500 PSF

WIND LOADS

UBC 1994 WITH A PEAK VELOCITY OF 120 MPH AND EXPOSURE "D".
UPLIFT PRESSURES ARE FOR JOIST AND JOIST CONNECTION DESIGN AND METAL DECK AND METAL DECK CONNECTION DESIGN. SEE BAR JOIST AND METAL DECK UPLIFT LOAD SCHEDULE.

SEISMIC LOADS (UBC 1994)

ZONE 3, Z=0.30, I=1.0, Rw= 6 (BEARING WALL)

FOUNDATIONS AND STRUCTURAL EARTHWORK FOR BUILDINGS

1. THE REQUIRED BEARING CONDITION FOR EACH FOUNDATION AND SLAB POUR SHALL BE VERIFIED BY THE CONTRACTOR'S TESTING AGENCY BEFORE THE CONTRACTOR MAY START PLACING THEM.
2. IN THE EVENT UNUSUAL SOIL CONDITIONS ARE FOUND, THE CONTRACTING OFFICER SHALL BE NOTIFIED IMMEDIATELY.
3. CONTRACTOR SHALL DEWATER AS REQUIRED FOR PLACEMENT OF FOUNDATIONS, ELEVATOR PIT, PILE CAPS, PILES...ETC.

CONCRETE

1. ALL DIMENSIONS ON STRUCTURAL DRAWINGS NOTED AS ABOVE FINISH FLOOR (A.F.F.) OR BELOW FINISH FLOOR (B.F.F.) SEE CIVIL DWGS FOR ACTUAL MEAN SEA LEVEL ELEVATIONS.
2. CONCRETE DESIGN IS BASED ON THE FOLLOWING STANDARDS:
   A. BUILDING CODE REQUIREMENTS FOR STRUCTURAL CONCRETE (ACI 318-95).
   B. ENVIRONMENTAL ENGINEERING CONCRETE STRUCTURES (ACI 350R-89)
   C. NAVFAC DM2.04, SEPT, 1986
   D. NAVFAC P-355, OCT, 1992
3. CONCRETE DESIGN IS BASED ON THE FOLLOWING MATERIAL STRENGTHS:
   A. CONCRETE (AT 28 DAYS UN):

1. FLOOR SLABS AND PAVEMENTS:	4500 psi
2. FOUNDATION AND PIERS:	3000 psi
3. ELEVATED SLABS:	3000 psi
4. ALL OTHER CONCRETE:	3000 psi

   B. REINFORCING STEEL: fy = 60,000 psi
   C. WELDED WIRE MESH: fy = 65,000 psi
   D. ANCHOR BOLTS : fy = 36,000 psi & fu = 58,000 psi
4. CONCRETE PROTECTION FOR REINFORCEMENT SHALL BE AS FOLLOWS:

	CONCRETE COVER
A. CAST AGAINST AND PERMANENTLY EXPOSED TO EARTH	3"
B. EXPOSED TO EARTH OR WEATHER, WHERE FORMS ARE USED:	
1. NO. 6 BAR AND LARGER	2"
2. NO. 5 BAR AND SMALLER	1 1/2 "
C. NOT EXPOSED TO WEATHER NOR IN CONTACT WITH GROUND:	
1. SLABS, WALLS AND JOISTS	1"
2. BEAMS, GIRDERS AND COLUMNS	1 1/2 "

5. DEPRESSED OR SLOPED SLABS SHALL MAINTAIN FULL THICKNESS UNLESS OTHERWISE NOTED.
6. ALL TOP BARS AT DISCONTINUOUS ENDS OF MEMBERS SHALL HAVE STANDARD HOOKS, EXCEPT FOR SLABS ON METAL DECK AND SLABS ON GRADE, UNLESS OTHERWISE NOTED.
7. PROVIDE CLASS B TENSION LAP SPLICES PER ACI 318, FOR CONCRETE STRENGTH AND BAR LOCATIONS NOTED, UNLESS NOTED OTHERWISE OR APPROVED BY THE CONTRACTING OFFICER. ENSURE ALL SPLICES DETAILED BY THE FABRICATOR ARE THE RESPONSIBILITY OF THE FABRICATOR. REVIEW BY THE CONTRACTING OFFICER OF SHOP DRAWINGS IS ONLY FOR GENERAL CONFORMANCE WITH DESIGN CONCEPT OF THE PROJECT AND GENERAL COMPLIANCE WITH INFORMATION GIVEN IN THE CONTRACT DOCUMENTS.
8. WELDED WIRE FABRIC SHALL BE LAPPED ONE FULL MESH EXCEPT AT CONTROL AND CONSTRUCTION JOINTS.
9. CHAMFER ALL EXPOSED CORNERS OF CONCRETE WITH 3/4 " x 45 DEGREE CHAMFER, UNLESS OTHERWISE NOTED.
10. PROVIDE NO. 4 DIAGONAL BARS 4'-0" LONG AT ALL REENTRANT CORNERS AS FOLLOWS:
    A. TWO NO. 4 EACH FACE IN ALL WALLS.
    B. TWO NO. 4 TOP IN ALL SLABS ON GRADE.
    C. TWO NO. 4 TOP IN FOUNDATION SLABS
11. BARS INTERRUPTED BY SLAB OPENINGS NOT FRAMED BY BEAMS SHALL BE REPLACED BY AN EQUIVALENT NUMBER OF CLOSELY SPACED BARS, LOCATED HALF ON EACH SIDE OF THE OPENING.
12. UNLESS OTHERWISE NOTED, PROVIDE CORNER BARS TO SPLICE HORIZONTAL REINFORCEMENT AT ALL WALL AND GRADE BEAM CORNERS. BARS SHALL BE THE SAME SIZE AND SPACING AS THE HORIZONTAL REINFORCING. SPLICE TOGETHER INTERSECTING WALLS OR GRADE BEAMS IN THE SAME MANNER.
13. DIMENSIONS OF EQUIPMENT SUPPORT PADS AND ANCHOR BOLTS ARE SHOWN FOR BID PURPOSES ONLY. CONTRACTOR SHALL VERIFY WITH PURCHASED EQUIPMENT PRIOR TO CONSTRUCTION.
14. REFER TO ARCHITECTURAL, MECHANICAL, ELECTRICAL, EQUIPMENT ARRANGEMENT, CIVIL AND VENDOR'S DRAWINGS AND SPECIFICATIONS FOR EMBEDDED ITEMS NOT SHOWN. (I.E. SUPPLY DUCT,ELECTRICAL CONDUIT, ETC.) THE CONTRACTOR SHALL BE RESPONSIBLE FOR COORDINATING AND PLACING ALL EMBEDDED ITEMS SHOWN ON THE DRAWINGS OR REQUIRED BY THE VARIOUS TRADES.
15. ALL EMBEDDED ITEMS AND CONNECTION PLATES NOT PAINTED SHALL BE GALVANIZED. DO NOT GALVANIZE STAINLESS STEEL PLATES.
16. THE CONCRETE SLAB ON GRADE SHALL NOT BE USED AS A FORM TO CAST ANY CONCRETE MEMBER.
17. START SAWING SLAB ON GRADE CONTROL JOINTS AS SOON AS CONCRETE HAS HARDENED SUFFICIENTLY TO PREVENT RAVELING OR DISLODGING OF AGGREGATES. UNLESS RAVELING OR DISLODGING OCCURS, COMPLETE SAWING OF JOINTS WITHIN THE MAXIMUM ELAPSED TIME LIMIT NOTED BELOW, BUT PREFERABLY LESS. THE SPECIFIED TIME FOR ANY ONE LOCATION STARTS WHEN FINISHING OPERATIONS ARE COMPLETE FOR THAT LOCATION. THE SPECIFIED TEMPERATURE IS THE MAXIMUM AIR TEMPERATURE IN DEGREES FAHRENHEIT THAT OCCURS WITHIN THE SPECIFIED TIME LIMIT. THE ELAPSED TIME MAY NEED TO BE SHORTENED EVEN MORE IF DRY AND OR WINDY CONDITIONS ARE PRESENT.

STANDARD WET-CUT SAW:

MAX. F	MAX. ELAPSED HOURS - FOR TROWELLED OR POWER FLOATED FINISH (EXCEPT AS NOTED) *
90 AND ABOVE	4
80 - 89	5
70 - 79	6
60 - 69	8
50 - 59	10
40 - 49	12

"SOFF-CUT" OR OTHER SIMILAR DRY-CUT SAW APPROVED BY CONTRACTING OFFICER

MAX. F	MAX. ELAPSED HOURS - FOR TROWELLED OR POWER FLOATED FINISH (EXCEPT AS NOTED) *
85 AND ABOVE	1
60 - 84	2
50 - 59	3
40 - 49	4

* FOR FINISHES WITHOUT TROWELING OR POWER FLOATING, INCREASE MAXIMUM TIME NOTED BY ADDING ONE HOUR IN HOT WEATHER AND UP TO THREE HOURS IN COLD WEATHER.

J.A. JONES CONSTRUCTION SERVICES — J.A. JONES OF THE CAROLINAS
LOCKWOOD GREENE — Consulting • Design • Construction

DSGN TCJ	DR NM	CHK DWK
SUPV	CH ENGR	
SUBMITTED BY (FIRM MEMBER-TITLE): FROOZ DSNGL WP 03MAY99		DATE
TECHNICAL BRANCH		
FPE		

DRAWING REVISIONS

Rev.	Description	Prep. By	Date	Apprvd.
0	FINAL DESIGN SUBMITTAL	DK	03MAY99	JBS
1	ISSUE FOR RECORD	AJB	01JUN01	JBS

BEAUFORT, S.C.

BACHELOR ENLISTED QUARTERS - PHASE IV

STRUCTURAL

DESIGN CRITERIA & GENERAL NOTES

MCAS — APPROVED

DATE — ETD FOR COMMANDER, NAVFAC

Naval Facilities Engineering Command
Southern Division
Charleston, South Carolina

RECORD DRAWING DATE 01JUN01

CODE I.D. NO.	80091
DRAWING SIZE:	D
SPEC. NO.	06-98-0690
CONSTRN. CONTR. NO.	N62467-98-D-0690
NAVFAC DRAWING NO.	5364409
SHEET	1 OF 19

SGE-01

$$$$ USERNAME $$$$ $$$$ DATE&TIME $$$$ $$$$ DESIGN FILE NAME $$$$

STRUCTURAL & MISCELLANEOUS STEEL

1. ALL DIMENSIONS ON STRUCTURAL DRAWINGS NOTED AS ABOVE FINISH FLOOR (A.F.F.) OR BELOW FINISH FLOOR (B.F.F.) SEE CIVIL DRAWINGS FOR ACTUAL MEAN SEA LEVEL ELEVATIONS.

2. STEEL DESIGN IS BASED ON THE NINTH EDITION OF THE AISC SPECIFICATION FOR THE DESIGN, FABRICATION AND ERECTION OF STRUCTURAL STEEL FOR BUILDINGS.

3. STEEL DESIGN IS BASED ON THE FOLLOWING MATERIAL STRENGTHS:
   A. STEEL SHAPES AND PLATES: fy=36,000 psi
   B. HIGH STRENGTH STEEL SHAPES AND PLATES: fy=50,000 psi
   C. STEEL TUBING, SQUARE OR RECTANGULAR: fy=46,000 psi
   D. STEEL PIPE: fy=35,000 psi
   E. ANCHOR BOLTS: fy=36,000 psi & fu=58,000 psi

4. UNLESS OTHERWISE NOTED, ALL BEAM CONNECTIONS SHALL BE SINGLE PLATE SHEAR CONNECTIONS AS SHOWN IN PART 4 OF THE AISC MANUAL OF STEEL CONSTRUCTION (NINTH EDITION). THE DESIGN OF CONNECTIONS FOR ANY PART OF THE STRUCTURE NOT NOTED ON THE DESIGN DRAWINGS SHALL BE COMPLETED BY THE FABRICATOR. UNLESS GREATER REACTIONS ARE NOTED ON THE DRAWINGS, CONNECTIONS SHALL DEVELOP AT LEAST ONE-HALF OF THE TOTAL UNIFORM LOAD CAPACITY OF THE BEAM. CONNECTIONS SHALL BE DESIGNED AS BEARING-TYPE CONNECTIONS WITH THREADS IN THE SHEAR PLANE, UNLESS OTHERWISE NOTED. IN NO CASE SHALL THE LENGTH OF FRAMED CONNECTIONS BE LESS THAN ONE-HALF THE "T" DISTANCE OF THE BEAM WEB.

5. MISCELLANEOUS BRACING CONNECTIONS NOT SHOWN SHALL BE DESIGNED FOR 1/2 THE ALLOWABLE TENSION CAPACITY OF THE MEMBER. IN ADDITION, BRACING CONNECTIONS SHALL BE DESIGNED AND DETAILED TO MEET THE REQUIREMENTS OF SECTIONS 2211.9.3.2 AND 2211.9.3.3 OF THE 1994 UNIFORM BUILDING CODE. BRACING CONNECTIONS SHALL BE DESIGNED AND DETAILED SO THAT ALL FORCE COMPONENTS WILL BE TRANSMITTED DIRECTLY TO THE CENTROID OF INTERSECTING MEMBERS. WHERE THIS IS NOT POSSIBLE, CONNECTIONS SHALL BE DESIGNED FOR ALL ECCENTRICITIES. BOLTED BRACING CONNECTIONS SHALL BE CONNECTED WITH A MINIMUM OF TWO BOLTS.

6. IN GENERAL, CONNECTIONS SHALL BE FIELD BOLTED. WELDED CONNECTIONS SHALL BE MADE WITH E70 ELECTRODES, UNLESS OTHERWISE RECOMMENDED BY AWS. ALL BOLTED CONNECTIONS SHALL BE MADE WITH 3/4 " DIAMETER A 325 HIGH STRENGTH BOLTS, UNLESS OTHERWISE NOTED ON DRAWINGS OR APPROVED BY THE CONTRACTING OFFICER.

7. MINIMUM FILLET WELD SIZE SHALL BE 3/16 " AND ALL GROOVE OR BUTT WELD SHALL BE COMPLETE PENETRATION UNLESS OTHERWISE NOTED.

8. GUSSET PLATES SHALL BE 3/8 " MINIMUM THICKNESS, UNLESS NOTED.

9. CONTRACTOR SHALL BE RESPONSIBLE FOR PROVIDING TEMPORARY BRACING OF STEEL FRAMES UNTIL ALL MEMBERS HAVE RECEIVED FINAL BOLTING OR WELDING AND OTHER ELEMENTS ARE IN PLACE, SUCH AS STEEL ROOF DECK, BRACING, CONCRETE FLOOR SLABS, ETC.

10. NO OPENINGS SHALL BE CUT IN STRUCTURAL MEMBERS UNLESS SHOWN ON THE DRAWINGS.

11. FORCES INDICATED THUS (XXk) ON BEAMS ARE AXIAL FORCES, POSITIVE FOR TENSION AND NEGATIVE FOR COMPRESSION. CONNECTIONS NOT NOTED SHALL BE DESIGNED BY THE FABRICATOR FOR THESE FORCES IN ADDITION TO THE FORCES FROM VERTICAL LOAD.

12. DIMENSIONS OF OPENINGS AND EQUIPMENT SUPPORTS ARE SHOWN FOR BID PURPOSES ONLY. CONTRACTOR SHALL VERIFY DIMENSIONS WITH PURCHASED EQUIPMENT PRIOR TO FABRICATION.

13. FLOOR GRATING SHALL BE ALL WELDED, GALVANIZED CARBON STEEL WITH BEARING BARS SIZE AS INDICATED ON THE DRAWINGS. WHERE SADDLE CLIPS ARE REQUIRED FOR REMOVABLE GRATING, THEY SHALL BE GALVANIZED.

14. DIMENSIONS IN BOXES [X'-X"] SHALL BE VERIFIED WITH CERTIFIED VENDOR DRAWINGS OR ACTUAL EQUIPMENT.

15. IF LEVELING NUTS ARE USED, VERIFY THAT THE LOAD ON THE NUTS AND ANCHOR BOLTS WILL NOT EXCEED THE ALLOWABLE STRESS. AFTER THE COLUMN HAS BEEN ALIGNED, USE BEARING DEVICES TO SUPPORT THE COLUMN AND THEN LOWER THE LEVELING NUTS TO THE TOP OF THE CONCRETE. AFTER GROUT HAS OBTAINED ITS DESIGNED STRENGTH, REMOVE THE BEARING DEVICES AND PATCH VOIDS WITH ADDITIONAL GROUT.

STEEL JOISTS AND JOIST GIRDERS

1. JOIST AND JOIST GIRDER DESIGN, MANUFACTURE AND INSTALLATION IS BASED ON THE STEEL JOIST INSTITUTE STANDARD SPECIFICATIONS, LOAD TABLES, AND WEIGHT TABLES FOR STEEL JOISTS AND JOIST GIRDERS.

2. DESIGN JOIST AND JOIST GIRDERS FOR THE FOLLOWING LOAD CASES:
   A. TOTAL GRAVITY LOADS INCLUDING CONCENTRATED LOADS NOTED ON THE PLAN FOR A SIMPLE SPAN CONDITION.
   B. NET UPLIFT DUE TO WIND FOR A SIMPLE SPAN CONDITION.

3. NO HOLES WILL BE PERMITTED IN THE BOTTOM CHORD. NO HOLES WILL BE PERMITTED ELSEWHERE UNLESS APPROVED BY CONTRACTING OFFICER AND FABRICATOR.

4. CLEAN JOISTS, JOIST GIRDERS, AND ACCESSORIES TO REMOVE ALL RUST, WELD SLAG AND SPLATTER, GREASE, DIRT, AND OTHER FOREIGN MATTER. PAINT WITHIN 24 HOURS AFTER CLEANING, JOISTS, JOIST GIRDERS, AND ACCESSORIES IN ACCORDANCE WITH SSPC PAINT SPECIFICATION 15-68T, TYPE 1, RED OXIDE PAINT.

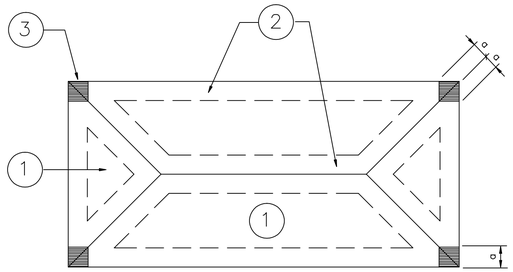

BAR JOIST AND METAL DECK UPLIFT LOAD (PSF) SCHEDULE

STRUCTURES	DESCRIPTION	DIMENSION a	TYPICAL ROOF AREA LOAD			ROOF OVERHANG LOAD			REMARKS
			AREA 1	AREA 2	AREA 3	AREA 1	AREA 2	AREA 3	
BEQ BLGDS A,B & C	METAL DECK	5'-8"	76	129	199	129	133	199	
COMMUNITY BLDG	METAL DECK	5'-8"	68	116	179	116	120	179	
	BAR JOIST	5'-8"	64	88	132	88	120	132	
UTILITY BLDG	METAL DECK	3'-0"	68	116	179	116	120	179	
COVERED SEATING	METAL DECK	3'-0"	36	84	148	84	88	148	

NOTES: 1. DIMENSION "a" IS ON THE HORIZONTAL PLANE OF THE BUILDING.
2. THE UPLIFT LOADS NOTED IN SCHEDULE ARE NET UPLIFT LOADS AND ARE NOT TO BE REDUCED.
3. BAR JOIST AND METAL DECK DESIGN STRESSES ARE TO BE INCREASED BY 33% WHEN DESIGNING WITH WIND UPLIFT LOADS.

METAL DECK

1. DECK DESIGN IS BASED ON THE STEEL DECK INSTITUTE DESIGN MANUAL.

2. PROVIDE GALVANIZED ROOF DECK WITH THE FOLLOWING MINIMUM PROPERTIES: 1 1/2" DEEP, 20 GAGE, WIDE RIB TYPE, 6" RIB SPACING, AND 33,000 psi YIELD STRESS.

3. DECK SPECIFIED HAS BEEN DETERMINED ON BASIS OF THREE SPAN CONDITION; FURNISH HEAVIER GAGE IF REQUIRED FOR ONE AND TWO SPAN CONDITIONS.

4. ENSURE DECK IS FASTENED TO RESIST THE NET UPLIFT NOTED ON THE DRAWINGS.

5. ENSURE DECK FASTENING PATTERN CAN DEVELOP AN ALLOWABLE DIAPHRAGM SHEAR STRENGTH OF 350 POUNDS PER LINEAR FOOT FOR COMMUNITY CENTER STRUCTURE. USE 200 PSF MINIMUM FOR ALL OTHER STRUCTURES.

6. SEE STRUCTURAL AND MISCELLANEOUS STEEL GENERAL NOTES FOR GALVANIZING REPAIR PAINT.

J.A. JONES CONSTRUCTION SERVICES
J.A. JONES OF THE CAROLINAS
LOCKWOOD GREENE Consulting•Design•Construction

DRAWING REVISIONS

Rev.	Description	Prep. By	Date	Approvd.
0	FINAL DESIGN SUBMITTAL	DK	03MAY99	JBS
1	ISSUE FOR RECORD	AJB	01JUN01	JBS

DSGN TCU DR NM CHK DWK
SUPV CH ENGR
SUBMITTED BY (FIRM MEMBER-TITLE) FROOZ ISNEL WP 03MAY99 DATE
TECHNICAL BRANCH
FPE

BEAUFORT, S.C.
BACHELOR ENLISTED QUARTERS - PHASE IV
STRUCTURAL
GENERAL NOTES
MCAS
APPROVED DATE
ETD FOR COMMANDER, NAVFAC

Naval Facilities Engineering Command
Southern Division
Charleston, South Carolina

RECORD DRAWING DATE 01JUN01
CODE I.D. NO. 80091
DRAWING SIZE: D
SPEC. NO.06-98-0690
CONSTRN. CONTR. NO. N62467-98-D-0690
NAVFAC DRAWING NO. 5364410
SHEET 2 OF 19
SGE-02

$$$$ USERNAME $$$$ $$$$ DATE&TIME $$$$ $$$$ DESIGN FILE NAME $$$$

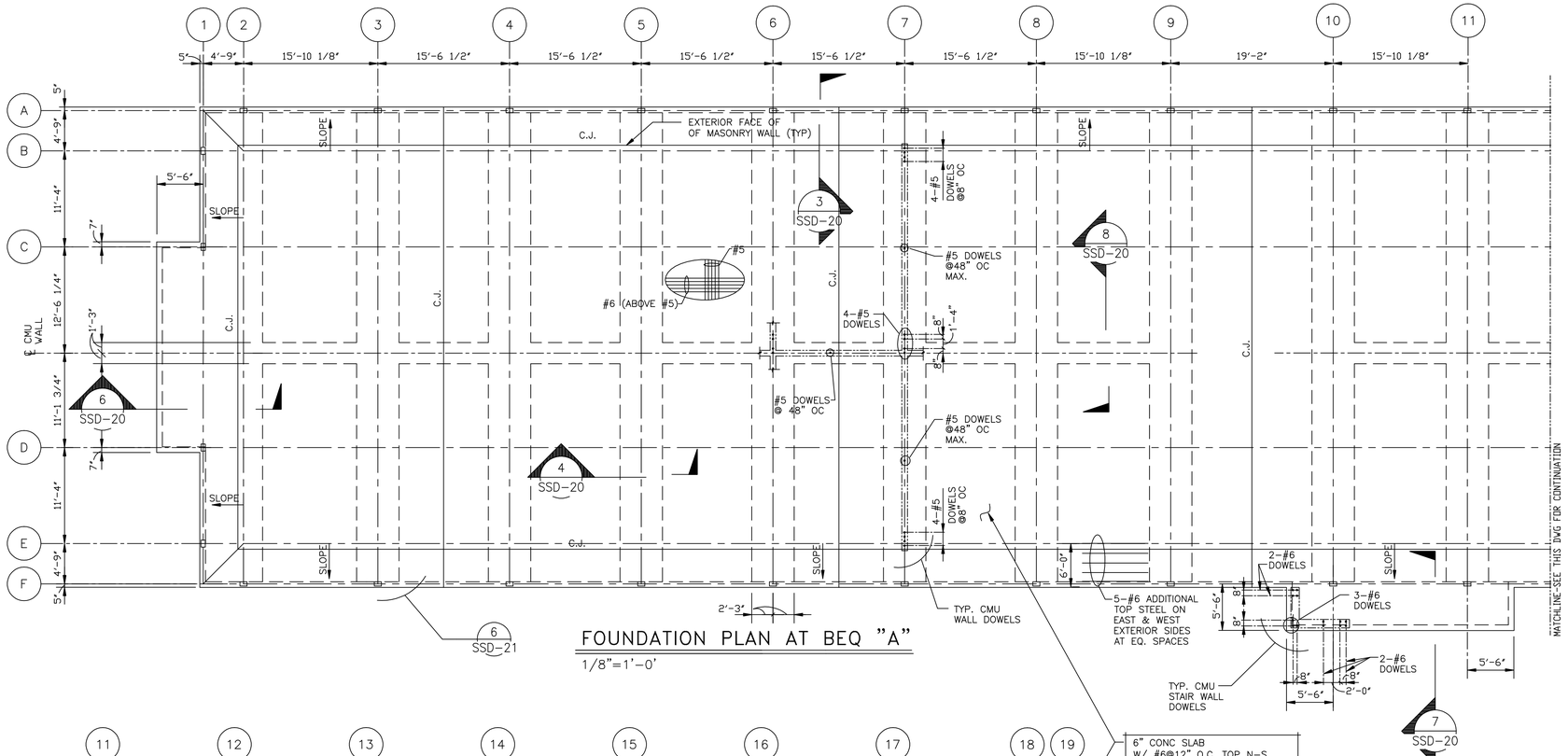

FOUNDATION PLAN AT BEQ "A"

1/8"=1'-0'

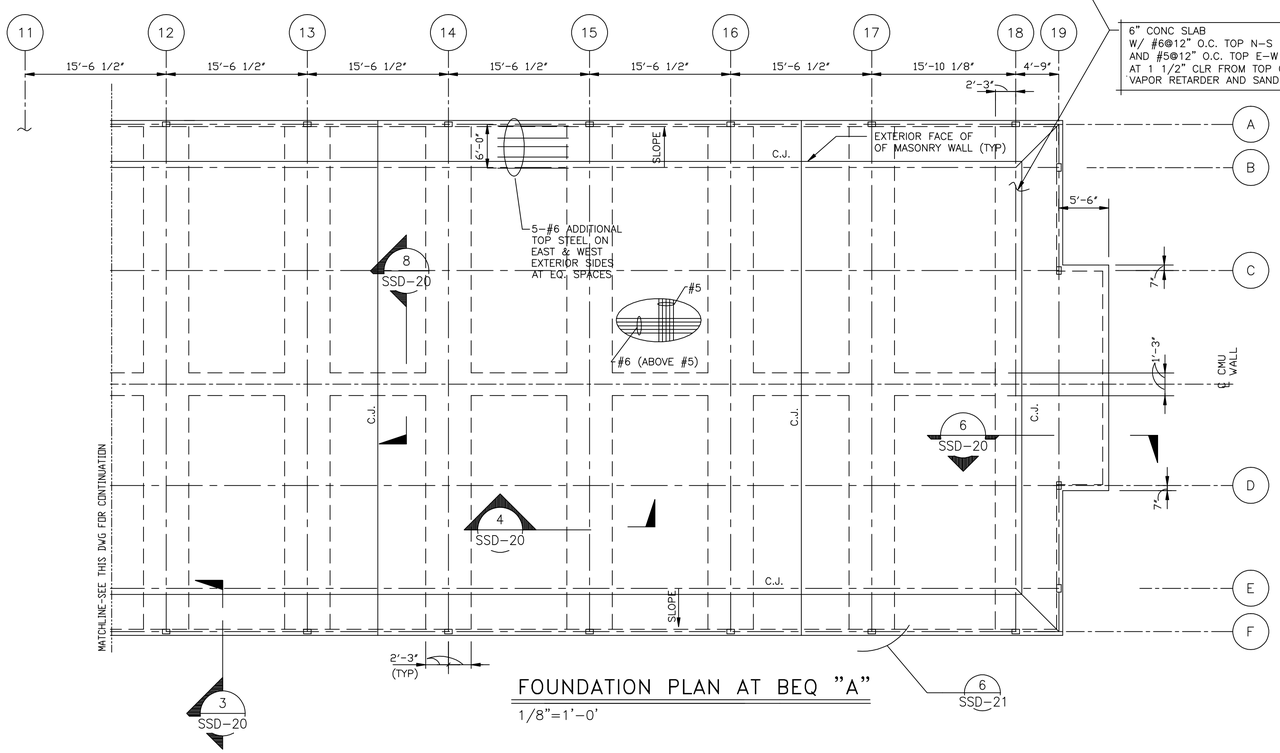

FOUNDATION PLAN AT BEQ "A"

1/8"=1'-0'

NOTES:

1. T/CONC EL 0'-0"
2. SEE ARCH DWGS FOR SIZE AND LOCATION OF WALL REINF.
3. C.J. DENOTES CONSTRUCTION/ CONTROL JOINT. SEE DET. 1/SSD-20.
4. DOWELS TO MATCH CMU WALL REINF. SIZE AND LOCATION. SEE ARCH DWGS.

NORTH

0 4 8 16 24

1/8"=1'-0"

J.A. JONES MANAGEMENT SERVICES

J.A. JONES OF THE CAROLINAS

LOCKWOOD GREENE Consulting•Design•Construction

DSGN TCU | DR NM | CHK DWK

SUPV | CH ENGR

SUBMITTED BY (FIRM MEMBER-TITLE): FIROZ ISRAEL VP 03MAY99 DATE

TECHNICAL BRANCH

PPE

DRAWING REVISIONS

Rev.	Description	Prep By	Date	Approvd.
0	FINAL DESIGN SUBMITTAL	DK	03MAY99	JBS
1	ADDED CJs	DK	12JUL99	JBS
2	ISSUE FOR RECORD	AJB	01JUN01	JBS

MCAS BEAUFORT, S.C.

BACHELOR ENLISTED QUARTERS - PHASE IV

STRUCTURAL

FOUNDATION & SLAB PLAN -90 UNIT BEQ A

APPROVED | DATE | EFD FOR COMMANDER, NAVFAC

Naval Facilities Engineering Command

Southern Division

Charleston, South Carolina

RECORD DRAWING DATE 01JUN01

CODE I.D. NO. 80091

DRAWING SIZE: D

SPEC. NO.06-98-0690

CONSTRN. CONTR. NO. N62467-98-D-0690

NAVFAC DRAWING NO. 5364411

SHEET 3 OF 19

SFS-10

$$$$ USERNAME $$$$ $$$$ DATE&TIME $$$$ $$$$ DESIGN FILE NAME $$$$

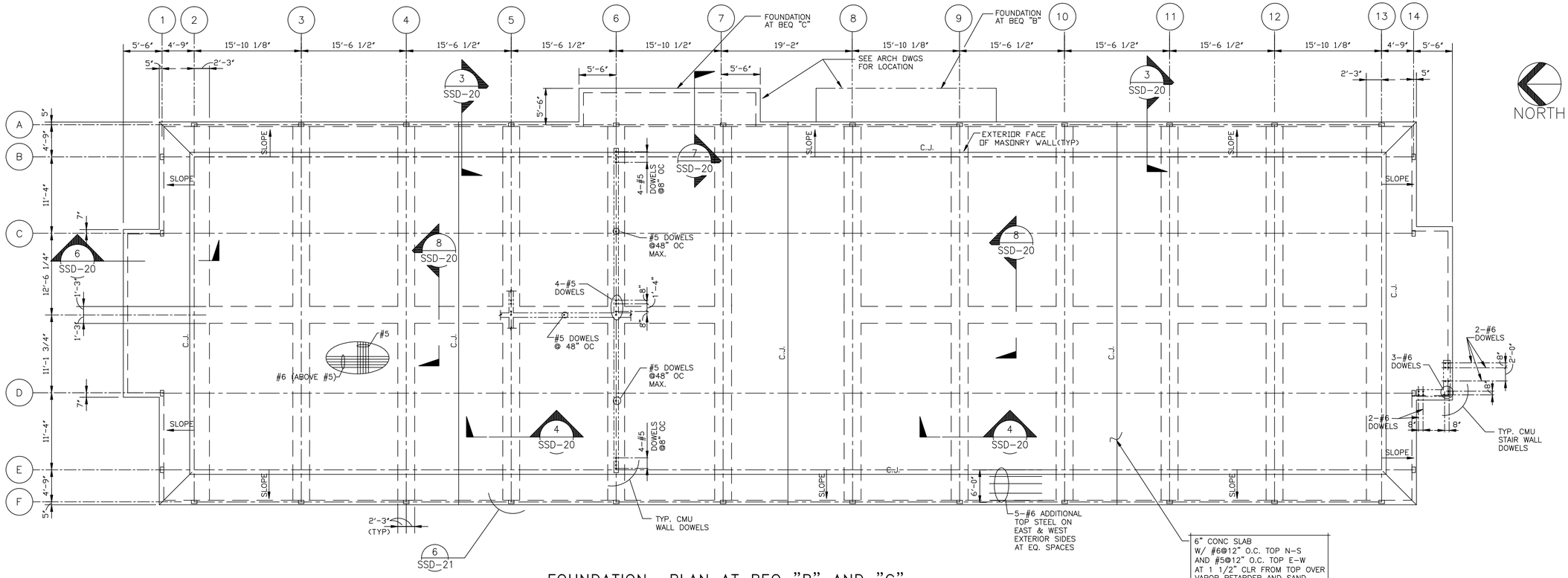

FOUNDATION PLAN AT BEQ "B" AND "C"

1/8"=1'-0'

NOTES:

1. T/CONC EL 0'-0"
2. SEE ARCH DWGS FOR SIZE AND LOCATION OF WALL REINF.
3. C.J. DENOTES CONSTRUCTION/ CONTROL JOINT. SEE DET. 1/SSD-20.
4. DOWELS TO MATCH CMU WALL REINF. SIZE AND LOCATION. SEE ARCH DWGS.
5. LOCATION OF STAIRS ADJACENT TO BRIDGEWAY VARIES.

0 4 8 16 24

1/8"=1'-0"

J.A. JONES MANAGEMENT SERVICES
J.A. JONES OF THE CAROLINAS
LOCKWOOD GREENE Consulting·Design·Construction

DSGN TCU	DR NM	CHK DWK	
SUPV	CH ENGR		
SUBMITTED BY (FIRM MEMBER-TITLE) FIROZ ISRAEL VP 03MAY99			DATE
TECHNICAL BRANCH			
PPE			

DRAWING REVISIONS

Rev.	Description	Prep By	Date	Apprvd.
0	FINAL DESIGN SUBMITTAL	DK	03MAY99	JBS
1	ADDED CJs	DK	12JUL99	JBS
2	ISSUE FOR RECORD	AJB	01JUN01	JBS

MCAS BEAUFORT, S.C.

BACHELOR ENLISTED QUARTERS - PHASE IV

STRUCTURAL

FOUNDATION & SLAB PLAN -60 UNIT BEQ B &C

APPROVED DATE EFD FOR COMMANDER, NAVFAC

Naval Facilities Engineering Command
Southern Division
Charleston, South Carolina

RECORD DRAWING DATE 01JUN01

CODE I.D. NO. 80091

DRAWING SIZE: D

SPEC. NO.06-98-0690

CONSTRN. CONTR. NO. N62467-98-D-0690

NAVFAC DRAWING NO. 5364412

SHEET 4 OF 19

SFS-11

$$$$ USERNAME $$$$ $$$$ DATE&TIME $$$$ $$$$ DESIGN FILE NAME $$$$

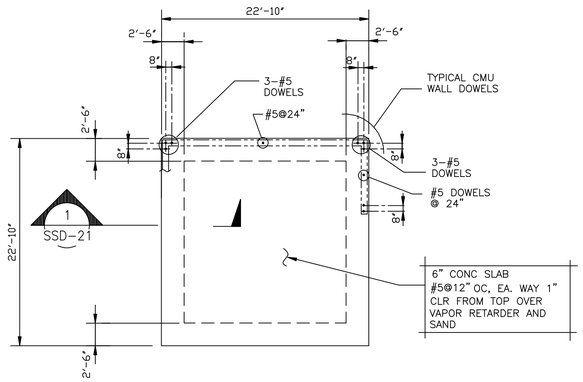

UTILITY BUILDING

FOUNDATION & SLAB PLAN

1/8"=1'-0" T/SLAB EL 0'-0"

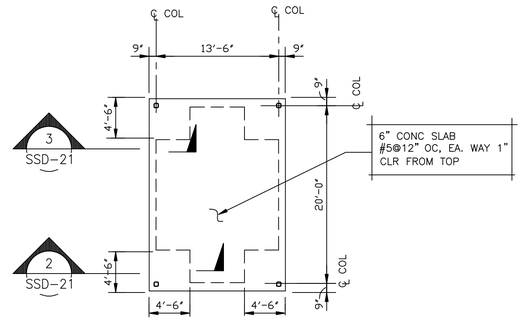

COVERED SEATING AREA

FOUNDATION & SLAB PLAN

1/8"=1'-0" T/SLAB EL 0'-0"

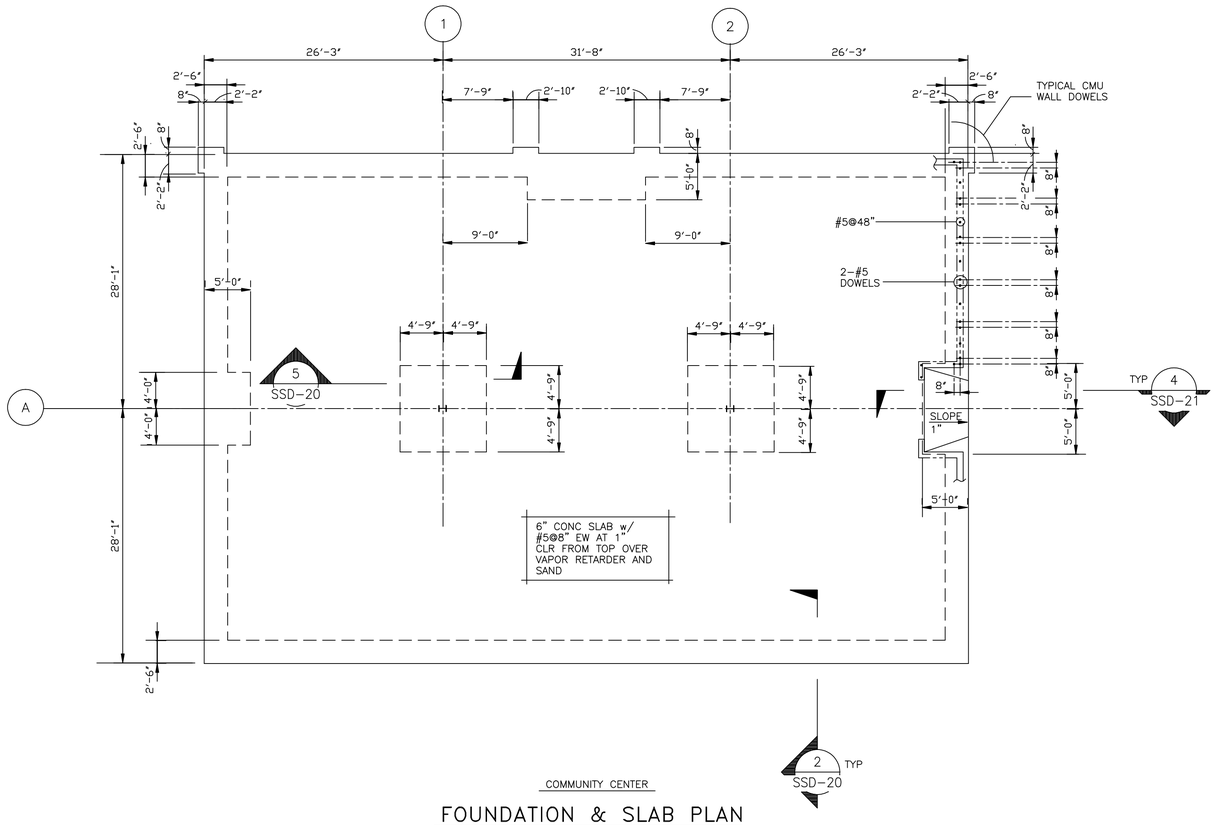

COMMUNITY CENTER

FOUNDATION & SLAB PLAN

1/8"=1'-0"

1. T/SLAB EL 0'-0"
2. DOWELS TO MATCH CMU WALL REINF SIZE AND LOCATION. SEE ARCH DWGS.

0 4 8 16 24

1/8"=1'-0"

J.A. JONES MANAGEMENT SERVICES
J.A. JONES OF THE CAROLINAS
LOCKWOOD GREENE Consulting•Design•Construction
Atlanta, Georgia

DSGN TCU	DR NM	CHK DWK	
SUPV	CH ENGR		
SUBMITTED BY (FIRM MEMBER-TITLE): FIXOZ ISDAEL VP 03MAY99			DATE
TECHNICAL BRANCH			
FPE			

DRAWING REVISIONS

Rev.	Description	Prep By	Date	Apprvd.
0	FINAL DESIGN SUBMITTAL	DK	03MAY99	JBS
1	ISSUE FOR RECORD	AJB	01JUN01	JBS

MCAS BEAUFORT, S.C.

BACHELOR ENLISTED QUARTERS - PHASE IV

STRUCTURAL

SLAB PLANS-MISC.

APPROVED DATE

EFD FOR COMMANDER, NAVFAC

Naval Facilities Engineering Command

Southern Division

Charleston, South Carolina

RECORD DRAWING DATE 01JUN01

CODE I.D. NO. 80091

DRAWING SIZE: D

SPEC. NO.06-98-0690

CONSTRN. CONTR. NO. N62467-98-D-0690

NAVFAC DRAWING NO. 5364413

SHEET 5 OF 19

SFS-12

$$$$ USERNAME $$$$ $$$$ DATE&TIME $$$$ $$$$ DESIGN FILE NAME $$$$

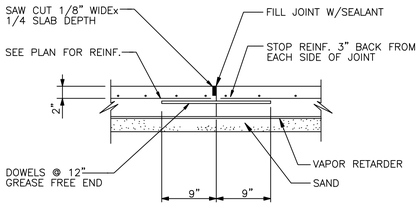

CONTRACTION JOINT – SLAB ON GRADE

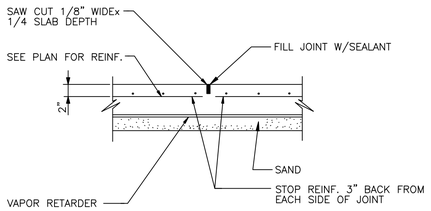

CONTROL JOINT – SLAB ON GRADE

TYPICAL DETAIL 1 SFS-10
NTS SSD-20 SFS-11

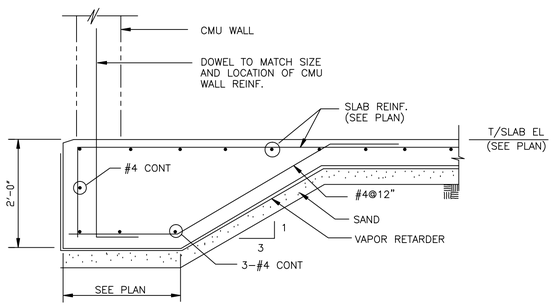

SECTION 2 SFS-12
3/4"=1'-0" SSD-20

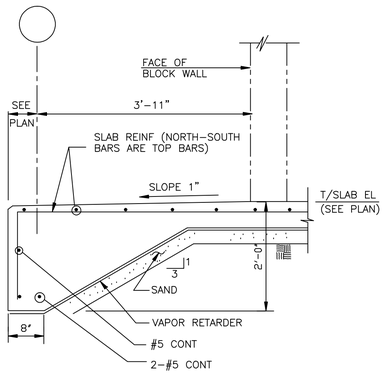

SECTION 3 SFS-10
3/4"=1'-0" SSD-20 SFS-11

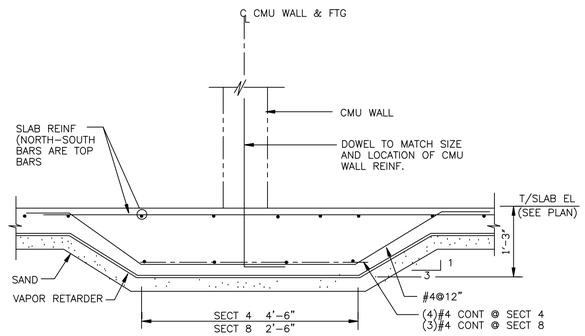

SECTION 4 SFS-10
3/4"=1'-0" SSD-20 SFS-11

SECTION 8 SFS-10
3/4"=1'-0" SSD-20 SFS-11

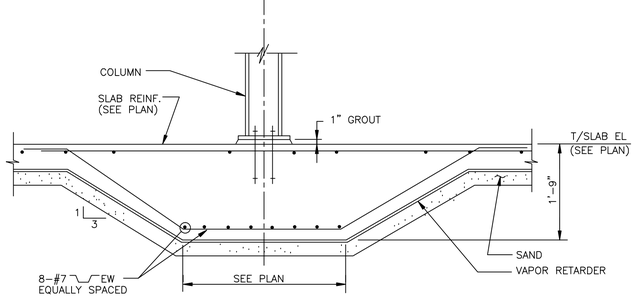

SECTION 5 SFS-12
3/4"=1'-0" SSD-20

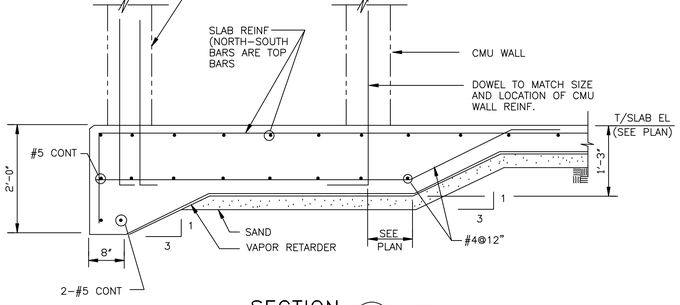

SECTION 6 SFS-10
3/4"=1'-0" SSD-20 SFS-11

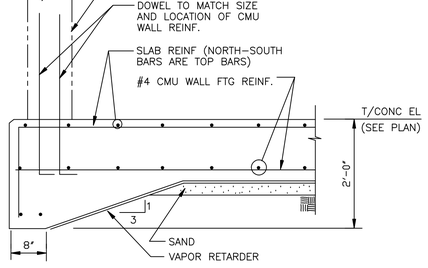

SECTION 7 SFS-10
3/4"=1'-0" SSD-20 SFS-11

J.A. JONES DISTINGUISHED BUILDERS
J.A. JONES OF THE CAROLINAS
LOCKWOOD GREENE
Consulting•Design•Construction

DSGN TCLJ	DR NJM	CHK DJV/KC
SUPV	CH ENGR	
SUBMITTED BY (FIRM MEMBER-TITLE): FROST LOWEL VP		DATE 03MAY99
TECHNICAL BRANCH		
FPE:		

DRAWING REVISIONS

Rev.	Description	Prep By	Date	Approvd.
0	FINAL DESIGN SUBMITTAL	DK	03MAY99	JBS
1	ISSUE FOR RECORD	ALB	01JUN01	JBS

BEAUFORT, S.C.
MCAS
BACHELOR ENLISTED QUARTERS - PHASE IV
STRUCTURAL
CONCRETE SECTIONS & DETAILS
DATE
APPROVED

Naval Facilities Engineering Command
Southern Division
Charleston, South Carolina

ETD FOR COMMANDER, NAVFAC

RECORD DRAWING DATE
01JUN01
CODE I.D. NO. 80091
DRAWING SIZE: D
SPEC. NO.06-98-0690
CONSTRN. CONTR. NO.
N62467-98-D-0690
NAVFAC DRAWING NO.
5364414
SHEET 6 OF 19
SSD-20

$$$$ USERNAME $$$$ $$$$ DATE&TIME $$$$ $$$$ DESIGN FILE NAME $$$$

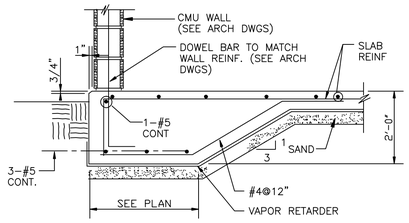

SECTION 1 SFS-12
1/2"=1'-0" SSD-21

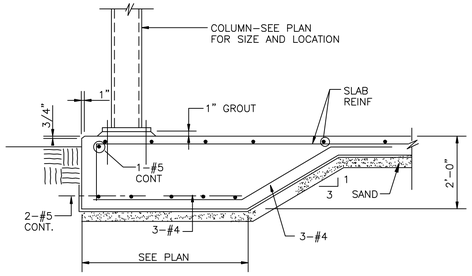

SECTION 2 SFS-12
1/2"=1'-0" SSD-21

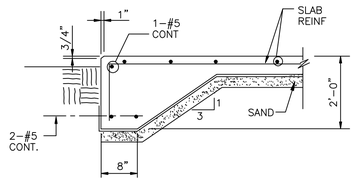

SECTION 3 SFS-12
1/2"=1'-0" SSD-21

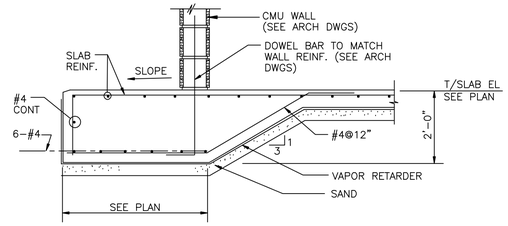

SECTION 4 SFS-12
1/2"=1'-0" SSD-21

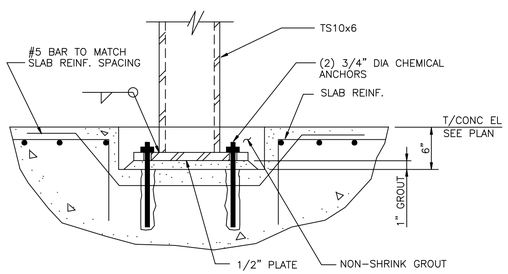

SECTION 5 SSD-21
1"=1'-0" SSD-21

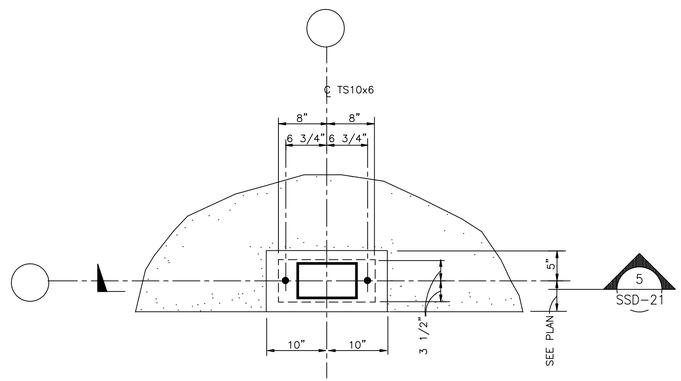

DETAIL 6 SFS-10
1"=1'-0" SSD-21 SFS-11
SSP-44
SSP-46

J.A. JONES MANAGEMENT SERVICES
J.A. JONES OF THE CAROLINAS
LOCKWOOD GREENE
Consulting•Design•Construction
Atlanta, Georgia

DSGN TCU	DR NM	CHK DWK	
SUPV	CH ENGR		
SUBMITTED BY (FIRM MEMBER-TITLE): FIROZ ISRAEL VP 03MAY99			DATE
TECHNICAL BRANCH			
FPE			

DRAWING REVISIONS

Rev.	Description	Prep By	Date	Apprvd.
0	FINAL DESIGN SUBMITTAL	DK	03MAY99	JBS
1	ISSUE FOR RECORD	AJB	01JUN01	JBS

MCAS BEAUFORT, S.C.

BACHELOR ENLISTED QUARTERS - PHASE IV

STRUCTURAL
CONCRETE SECTIONS & DETAILS

APPROVED DATE

EFD FOR COMMANDER, NAVFAC

Naval Facilities Engineering Command
Southern Division
Charleston, South Carolina

RECORD DRAWING DATE
01JUN01

CODE I.D. NO. 80091
DRAWING SIZE: D
SPEC. NO.06-98-0690
CONSTRN. CONTR. NO.
N62467-98-D-0690
NAVFAC DRAWING NO.
5364415
SHEET 7 OF 19
SSD-21

$$$$ USERNAME $$$$ $$$$ DATE&TIME $$$$ $$$$ DESIGN FILE NAME $$$$

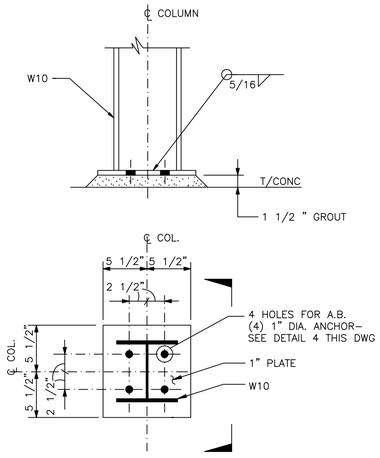

DETAIL 1 SSP-42
NTS SSD-30

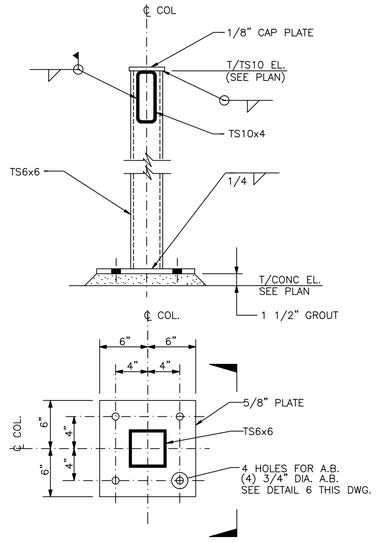

DETAIL 2 SSP-42
NTS SSD-30

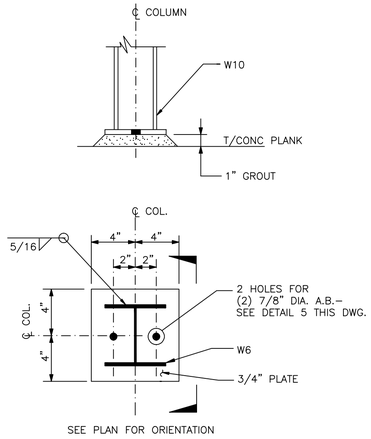

DETAIL 3 SSP-44
NTS SSD-30

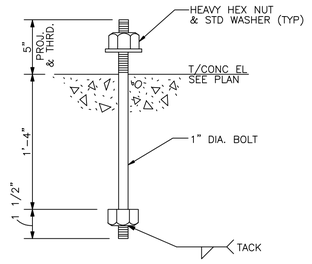

DETAIL 4 SSD-30
NTS SSD-30

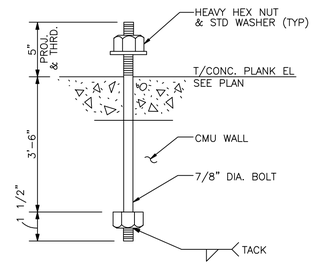

DETAIL 5 SSD-30
NTS SSD-30 SSD-31

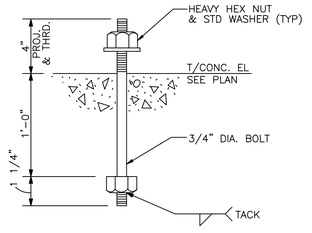

DETAIL 6 SSD-30
NTS SSD-30

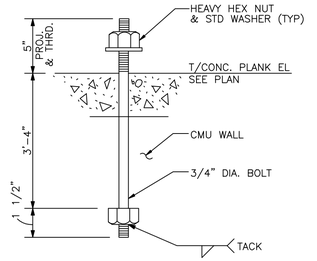

DETAIL 7 SSD-31
NTS SSD-30 SSD-32

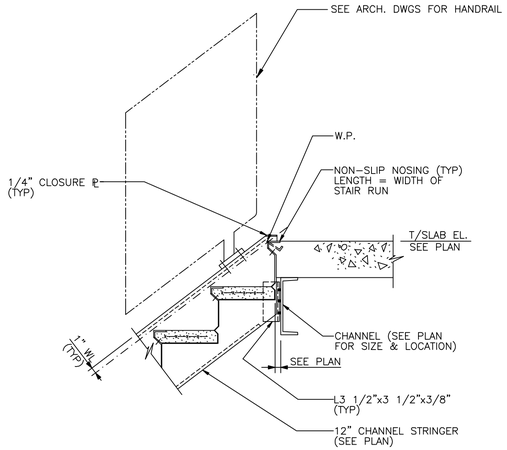

SECTION 9 SSP-43
NTS SSD-30 SSP-45

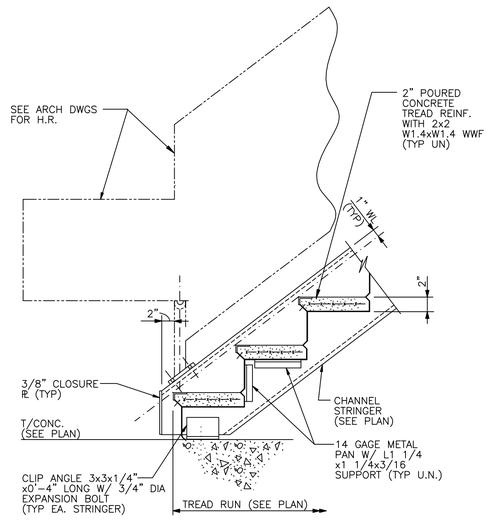

SECTION 10 SSP-43
NTS SSD-30 SSP-45

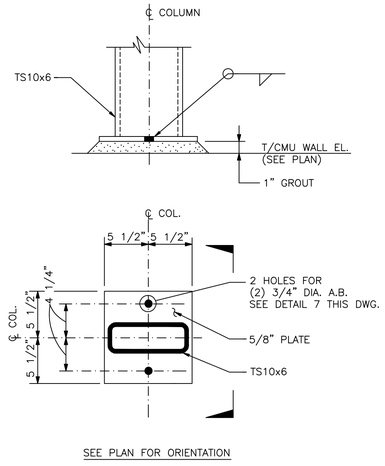

DETAIL 8 SSP-44
NTS SSD-30 SSP-46

J.A. JONES
J.A. JONES CONSTRUCTION
LOCKWOOD GREENE
Consulting•Design•Construction

DSGN TCLJ | DR NJM | CHK DJV/KC
SUPV | CH ENGR
SUBMITTED BY (FIRM MEMBER–TITLE): FRDIZZ (SMAIL VP (DMAY99) DATE
TECHNICAL BRANCH
FPE:

DRAWING REVISIONS

Rev.	Description	Prep. By	Date	Approvd.
0	FINAL DESIGN SUBMITTAL	DK	(DMAY99)	JBS
1	ISSUE FOR RECORD	AJB	01JUN01	JBS

BEAUFORT, S.C.
MCAS
BACHELOR ENLISTED QUARTERS - PHASE IV
STRUCTURAL
STEEL SECTIONS & DETAILS
DATE
APPROVED

ETD FOR COMMANDER, NAVFAC

Naval Facilities Engineering Command
Southern Division
Charleston, South Carolina

RECORD DRAWING DATE
01JUN01
CODE I.D. NO. 80091
DRAWING SIZE: D
SPEC. NO.06-98-0690
CONSTRN. CONTR. NO.
N62467-98-D-0690
NAVFAC DRAWING NO.
5364416
SHEET 8 OF 19
SSD-30

$$$$ USERNAME $$$$ $$$$ DATE&TIME $$$$ $$$$ DESIGN FILE NAME $$$$

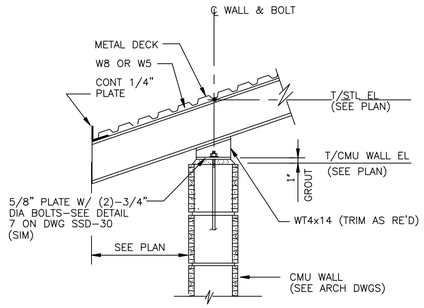

SECTION 1 SSP-42
NTS SSD-31

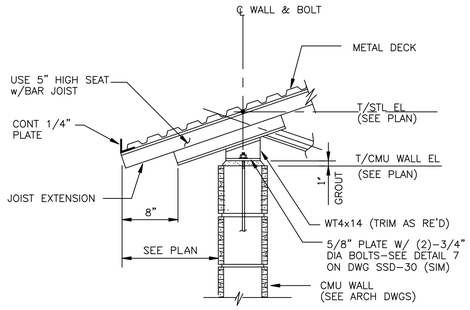

SECTION 2 SSP-42
NTS SSD-31

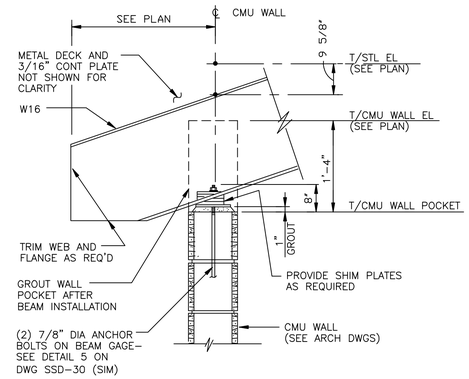

SECTION 3 SSP-42
NTS SSD-31

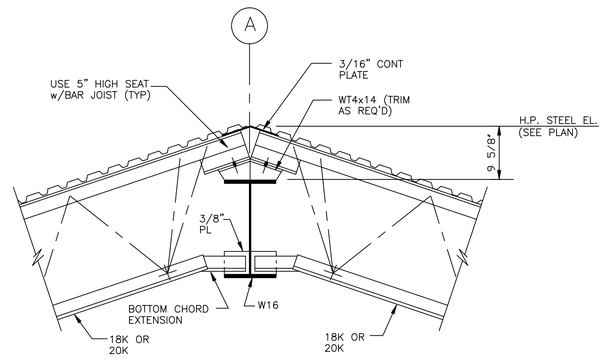

SECTION 4 SSP-42
NTS SSD-31

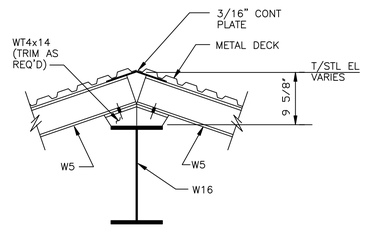

SECTION 5 SSP-42
NTS SSD-31

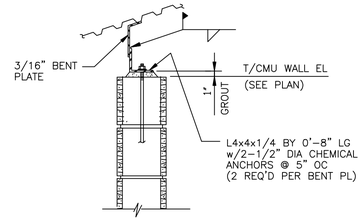

SECTION 6 SSP-42
NTS SSD-31

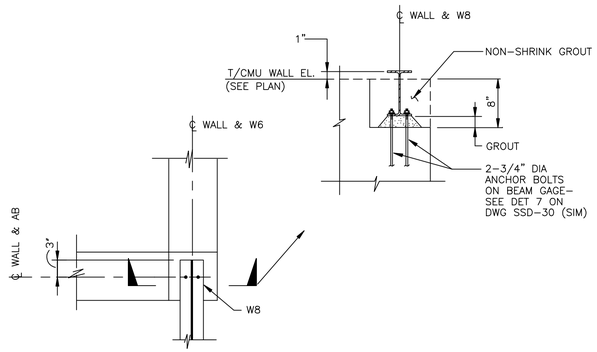

DETAIL 7 SSP-42
NTS SSD-31

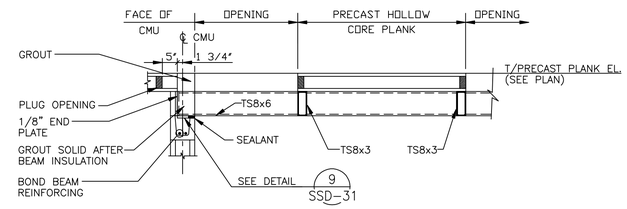

SECTION 8 SSD-46 SSD-44
NTS SSD-31

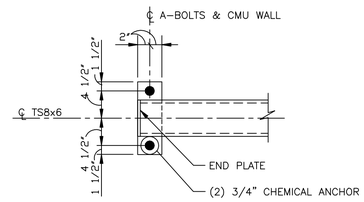

DETAIL 9 SSP-31
NTS SSD-31

J.A. JONES
J.A. JONES CONSTRUCTION SERVICES
LOCKWOOD GREENE
Consulting-Design-Construction

DSGN TCU	DR NM	CHK DV/K		
SUPV	CH ENGR			
SUBMITTED BY (FIRM MEMBER-TITLE): FROST ISMAIL VP				DATE
TECHNICAL BRANCH				
FPE				

DRAWING REVISIONS

Rev.	Description	Prep By	Date	Approvd.
0	FINAL DESIGN SUBMITTAL	DK	(DRAFT)	JBS
1	REVISED DET. 9 REFERENCE	DK	12.JUL.99	JBS
2	ISSUE FOR RECORD	AJB	01.JUN01	JBS

MCAS BEAUFORT, S.C.

BACHELOR ENLISTED QUARTERS - PHASE IV

STRUCTURAL

STEEL SECTIONS & DETAILS

DATE

APPROVED

ETD FOR COMMANDER, NAVFAC

Naval Facilities Engineering Command
Southern Division
Charleston, South Carolina

RECORD DRAWING DATE (01JUN01)

CODE I.D. NO.	80091
DRAWING SIZE:	D
SPEC. NO.	06-98-0690
CONSTRN. CONTR. NO.	N62467-98-D-0690
NAVFAC DRAWING NO.	5364417
SHEET	9 OF 19

SSD-31

$$$$ USERNAME $$$$ $$$$ DATE&TIME $$$$ $$$$ DESIGN FILE NAME $$$$