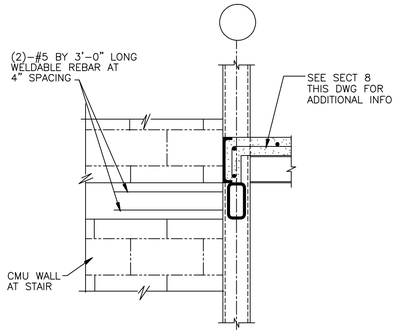

SECTION 1 SSP-43 / SSD-32 SSP-45
SCALE: 3/4"=1'-0"

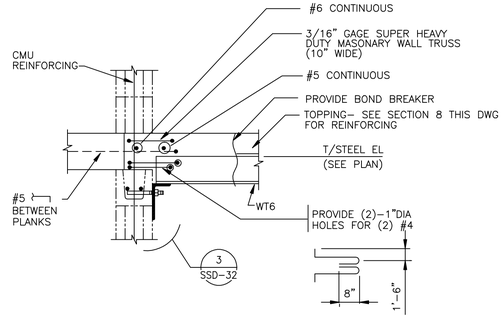

SECTION 2 SSP-43 / SSD-32 SSP-45
SCALE: 3/4"=1'-0"

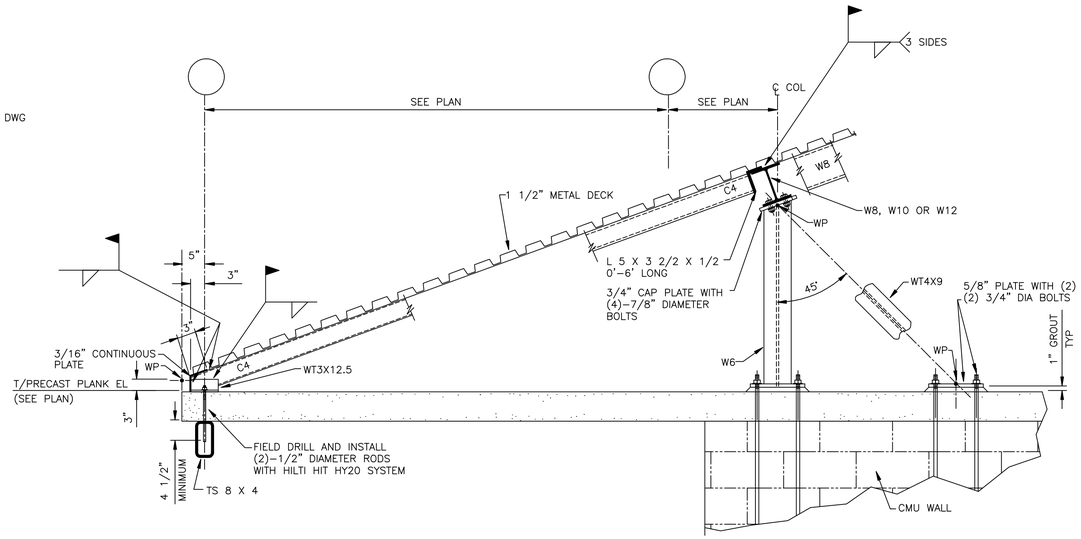

SECTION 5 SSP-40 / SSD-32 SSP-41 SSP-44 SSP-46
SCALE: 3/4"=1'-0"

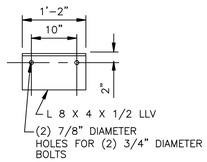

DETAIL 3 SSP-32 / SSD-32
SCALE: 3/4"=1'-0"

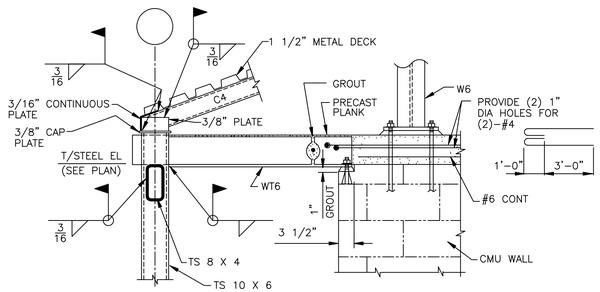

SECTION 4 SSP-40 / SSD-32 SSP-41 SSP-44 SSP-46
SCALE: 3/4"=1'-0"

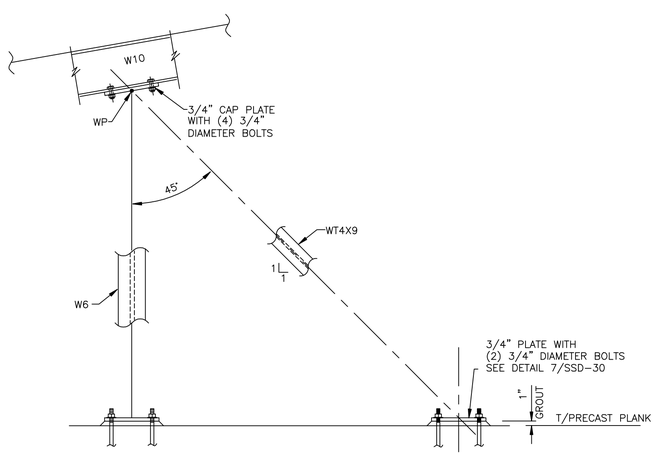

SECTION 6 SSP-44 / SSD-32 SSP-40 SSP-41 SSP-46
SCALE: 3/4"=1'-0"

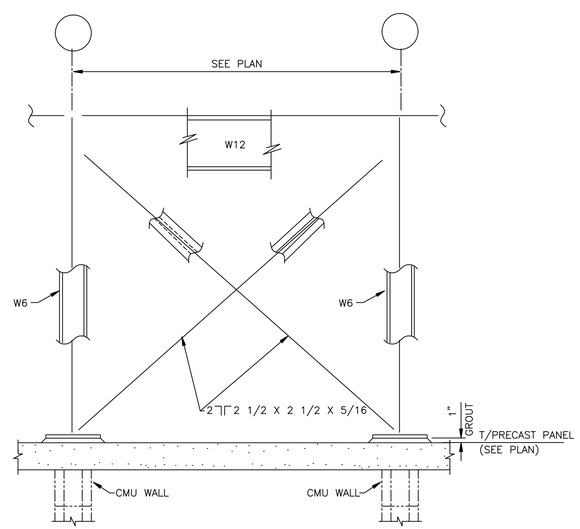

SECTION 7 SSP-44 / SSD-32 SSP-40 SSP-41 SSP-46
SCALE: 3/4"=1'-0"

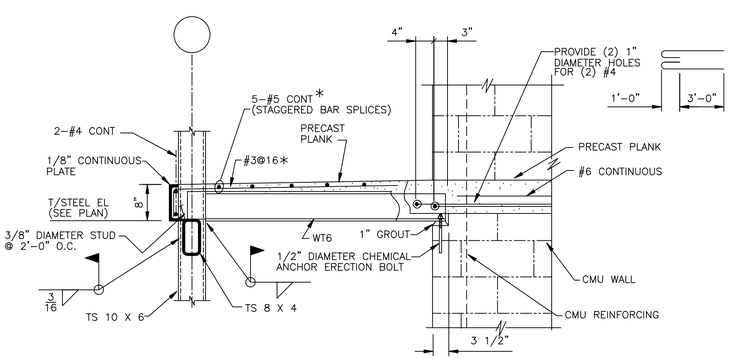

* ALTERNATE REINFORCING: W14xW14x4x4 MESH

SECTION 8 SSP-32 / SSD-32 SSP-43 SSP-45
SCALE: 3/4"=1'-0"

J.A. JONES MANAGEMENT SERVICES, INC. OF THE CAROLINAS
LOCKWOOD GREENE Consulting•Design•Construction

DSGN TCU	DR NM	CHK DWK	
SUPV	CH ENGR		
SUBMITTED BY (FIRM MEMBER-TITLE): FROZZ ESNEL VP			DATE 03MAY99
TECHNICAL BRANCH			
FPE			

DRAWING REVISIONS

Rev.	Description	Prep By	Date	Approvd.
0	FINAL DESIGN SUBMITTAL	DK	03MAY99	JBS
1	ISSUE FOR RECORD	AJB	01JUN01	JBS

MCAS BEAUFORT, S.C.
BACHELOR ENLISTED QUARTERS - PHASE IV
STRUCTURAL
SECTIONS & DETAILS
APPROVED
DATE
ETD FOR COMMANDER, NAVFAC

Naval Facilities Engineering Command
Southern Division
Charleston, South Carolina

RECORD DRAWING DATE 01JUN01
CODE I.D. NO. 80091
DRAWING SIZE: D
SPEC. NO.06-98-0690
CONSTRN. CONTR. NO. N62467-98-D-0690
NAVFAC DRAWING NO. 5364418
SHEET 10 OF 19
SSD-32

$$$$ USERNAME $$$$ $$$$ DATE&TIME $$$$ $$$$ DESIGN FILE NAME $$$$

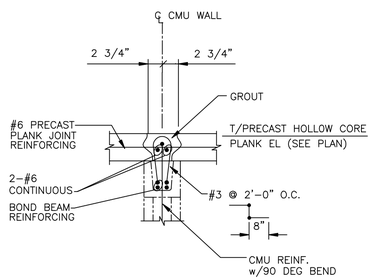

SECTION 1 SSP-44 SSD-33 SSP-46
SCALE: 3/4"=1'-0"

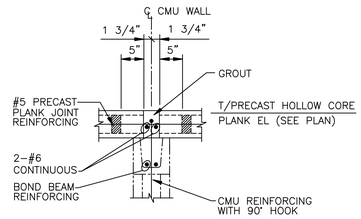

SECTION 2 SSP-44 SSD-33 SSP-46
SCALE: 3/4"=1'-0"

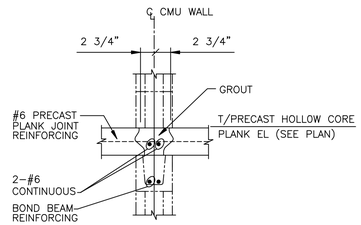

SECTION 3 SSP-43 SSD-33 SSP-45
SCALE: 3/4"=1'-0"

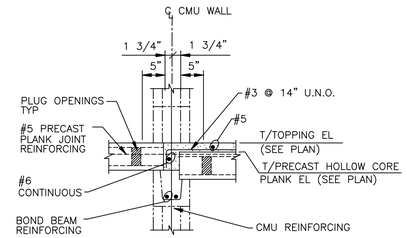

SECTION 4 SSP-43 SSD-33 SSP-45
SCALE: 3/4"=1'-0"

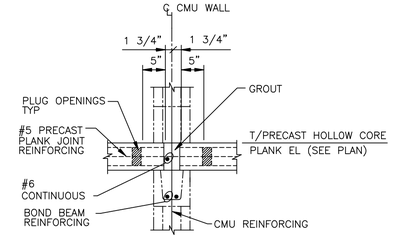

SECTION 5 SSP-43 SSD-33 SSP-45
SCALE: 3/4"=1'-0"

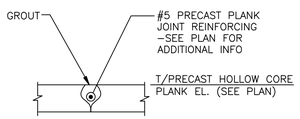

SECTION 6 SSP-43 SSD-33 SSP-44 SSP-45 SSP-46
SCALE: 3/4"=1'-0"

J.A. JONES MANAGEMENT SERVICES
J.A. JONES OF THE CAROLINAS
LOCKWOOD GREENE
Consulting • Design • Construction

DSGN TCJ	DR NM	CHK DWK	
SUPV	CH ENGR		
SUBMITTED BY (FIRM MEMBER-TITLE): FRDOZ ESNEL VP			DATE 03MAY99
TECHNICAL BRANCH			
FPE			

DRAWING REVISIONS

Rev.	Description	Prep By	Date	Approvd.
0	FINAL DESIGN SUBMITTAL	DK	03MAY99	JBS
1	ISSUE FOR RECORD	AJB	01JUN01	JBS

MCAS
BACHELOR ENLISTED QUARTERS - PHASE IV
BEAUFORT, S.C.
STRUCTURAL
SECTIONS & DETAILS
APPROVED
DATE
ETD FOR COMMANDER, NAVFAC

Naval Facilities Engineering Command
Southern Division
Charleston, South Carolina

RECORD DRAWING DATE 01JUN01
CODE I.D. NO. 80091
DRAWING SIZE: D
SPEC. NO.06-98-0690
CONSTRN. CONTR. NO. N62467-98-D-0690
NAVFAC DRAWING NO. 5364419
SHEET 11 OF 19
SSD-33

FLOOR OR ATTIC OPENING SCHEDULE

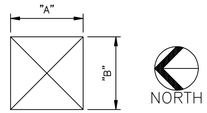

OPENING NO.	"A" DIMEN.	"B" DIMEN.	LOCATION	NUMBER REQ'D	DETAIL	REMARKS
FO–1	3'–2"	3'–2"	BEQ – A	2	–	HVAC OPENING
FO–2	2'–5"	4'–0"	BEQ – A	12	–	HVAC OPENING
FO–3	3'–2"	3'–2"	BEQ – B & C	2	–	HVAC OPENING
FO–4	2'–4"	4'–0"	BEQ – B & C	12	–	HVAC OPENING
RO–5	4'–0"	8'–0"	BEQ – A, B & C	3	SECT. 8/ SSD–31	ATTIC ACCESS OPENING

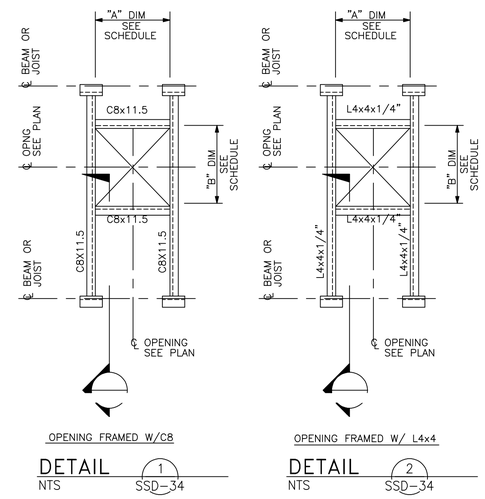

NOTE: SEE ROOF FRAMING PLAN FOR ORIENTATION

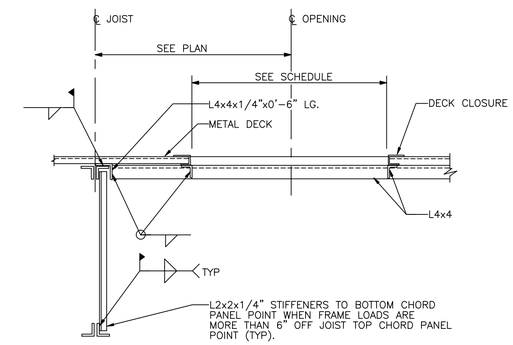

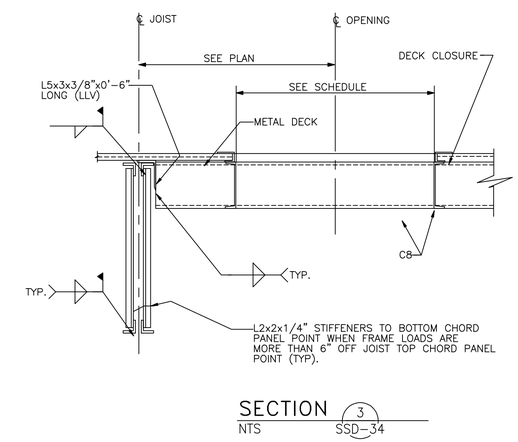

ROOF OPENING SCHEDULE

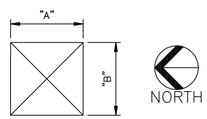

OPENING NO.	"A" DIMEN.	"B" DIMEN.	LOCATION	NUMBER REQ'D	DETAIL	REMARKS
RO–1	3'–6"	5'–6"	BEQ B & C	2	1	EQ.# IH–002 EQ.# IH–003
RO–2	1'–4"	5'–6"	BEQ B & C	2	1	EQ.# RH–003 EQ.# RH–005
RO–3	3'–2 1/2"	3'–2 1/2"	BEQ B & C	2	1	EQ.# EF–002 EQ.# EF–003
RO–4	3'–6"	5'–6"	BEQ A	1	1	EQ.# IH–001
RO–5	1'–8"	5'–6"	BEQ A	2	1	EQ.# RH–001 EQ.# RH–002
RO–6	3'–2 1/2"	3'–2 1/2"	BEQ A	1	1	EQ.# EF–001
RO–7	1'–0 1/2"	1'–0 1/2"	COMMUNITY CENTER	1	2	EQ.# EF–004
RO–8	1'–0"	1'–8"	COMMUNITY CENTER	1	2	EQ.# IH–005
RO–9	1'–0"	1'–8"	COMMUNITY CENTER	1	2	EQ.# IH–004
RO–10	4'–0"	2'–6"	COMMUNITY CENTER	2	2	INTAKE/RELIEF HOOD
RO–11	2'–8 1/2"	2'–8 1/2"	UTILITY BLDG.	1	1	EQ.# EF–006
RO–12	1'–8"	4'–0"	BEQ B & C	2	1	EQ.# RH–004 EQ.# RH–006

J.A. JONES MANAGEMENT SERVICES
J.A. JONES OF THE CAROLINAS
LOCKWOOD GREENE
Consulting•Design•Construction

DSGN TCU	DR NM	CHK DWK	
SUPV	CH ENGR		
SUBMITTED BY (FIRM MEMBER–TITLE): FIROOZ ISNEL VP			DATE (13MAY99)
TECHNICAL BRANCH			
FPE			

DRAWING REVISIONS

Rev.	Description	Prep By	Date	Approvd.
0	FINAL DESIGN SUBMITTAL	DK	(13MAY99)	JBS
1	ISSUE FOR RECORD	AJB	01JUN01	JBS

MCAS BEAUFORT, S.C.

BACHELOR ENLISTED QUARTERS – PHASE IV

STRUCTURAL SCHEDULES

APPROVED

DATE

ETD FOR COMMANDER, NAVFAC

Naval Facilities Engineering Command
Southern Division
Charleston, South Carolina

RECORD DRAWING DATE 01JUN01

CODE I.D. NO. 80091

DRAWING SIZE: D

SPEC. NO.06–98–0690

CONSTRN. CONTR. NO. N62467–98–D–0690

NAVFAC DRAWING NO. 5364420

SHEET 12 OF 19

SSD–34

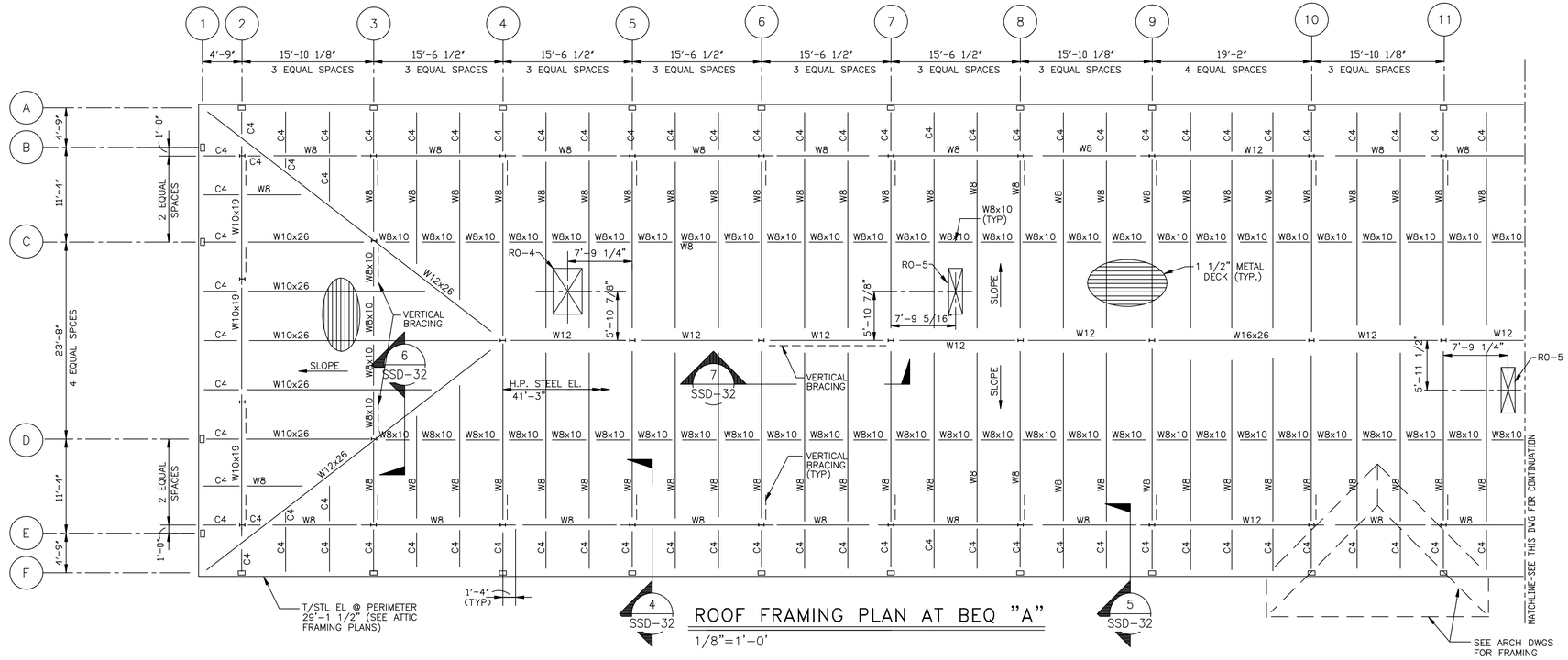

ROOF FRAMING PLAN AT BEQ "A"

1/8"=1'-0'

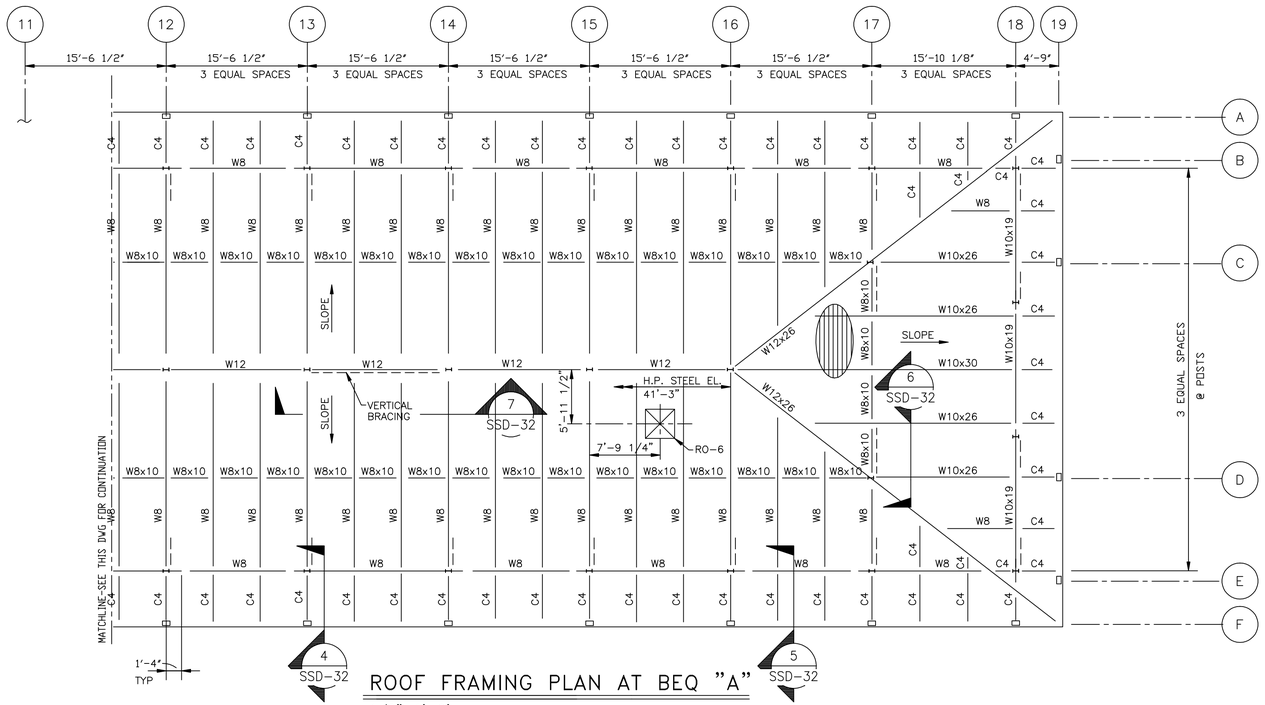

ROOF FRAMING PLAN AT BEQ "A"

1/8"=1'-0'

NORTH

NOTES

1. W8 DENOTES W8x18
2. W12 DENOTES W12x19
3. C4 DENOTES C4x5.4
4. T/CONC. HOLLOW CORE PLANKS EL. 29'-7 1/2"

0 4 8 16 24

1/8"=1'-0"

J.A. JONES MANAGEMENT SERVICES

J.A. JONES OF THE CAROLINAS

LOCKWOOD GREENE Consulting•Design•Construction

DSGN TCLJ	DR NM	CHK DVJK	
SUPV	CH ENGR		
SUBMITTED BY (FIRM MEMBER-TITLE) FRITZ ISRAEL VP (DMY/YR)			DATE
TECHNICAL BRANCH			
			FPE

DRAWING REVISIONS

Rev.	Description	Prep By	Date	Approvd.
0	FINAL DESIGN SUBMITTAL	DK	(DMY/YR)	JBS
1	ISSUE FOR RECORD	AJB	(DJJN03)	JBS

BEAUFORT, S.C.

MCAS

BACHELOR ENLISTED QUARTERS - PHASE IV

STRUCTURAL

ROOF FRAMING PLAN- 90 UNIT BEQ A

DATE

APPROVED

Naval Facilities Engineering Command

Southern Division

Charleston, South Carolina

ETD FOR COMMANDER, NAVFAC

RECORD DRAWING DATE (DJJN03)	
CODE I.D. NO.	80091
DRAWING SIZE:	D
SPEC. NO.	06-98-0690
CONSTRN. CONTR. NO.	N62467-98-D-0690
NAVFAC DRAWING NO.	5364421
SHEET 13 OF	19
SSP-40	

$$$$ USERNAME $$$$ $$$$ DATE&TIME $$$$ $$$$ DESIGN FILE NAME $$$$

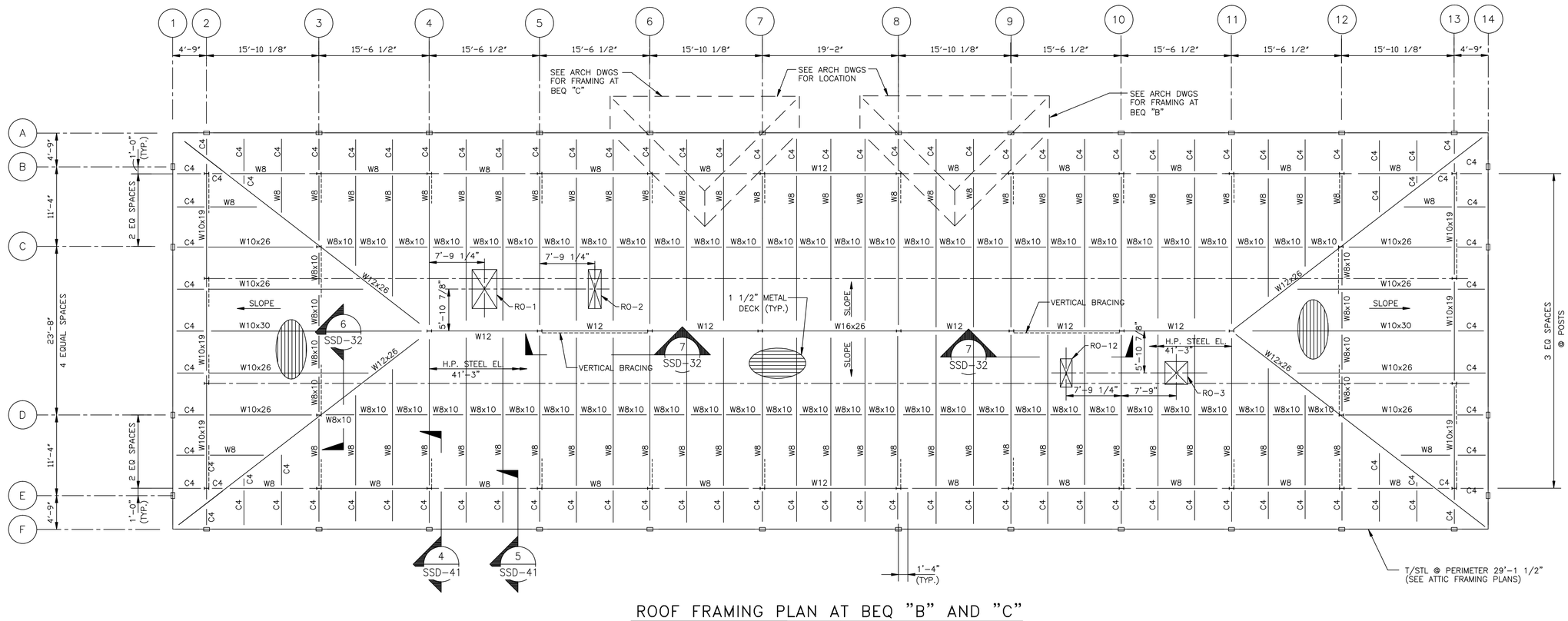

ROOF FRAMING PLAN AT BEQ "B" AND "C"

1/8"=1'-0'

NOTES

1. W8 DENOTES W8x18
2. W12 DENOTES W12x19
3. C4 DENOTES C4x5.2
4. T/CONC. HOLLOW CORE PLANKS EL. 29'-7 1/2"

0 4 8 16 24
1/8"=1'-0"

J.A. JONES MANAGEMENT SERVICES, INC. OF THE CAROLINAS
LOCKWOOD GREENE Consulting Design Construction

DSGN TCU DR NM CHK pvK
SUPV CH ENGR
SUBMITTED BY (FIRM MEMBER-TITLE): TODD ISRAEL VP 03MAY99 DATE
TECHNICAL BRANCH
FPE

DRAWING REVISIONS

Rev.	Description	Prep By	Date	Apprvd.
0	FINAL DESIGN SUBMITTAL	DK	03MAY99	JBS
1	ISSUE FOR RECORD	AJB	01JAN01	JBS

MCAS BEAUFORT, S.C.
BACHELOR ENLISTED QUARTERS - PHASE IV
STRUCTURAL
ROOF FRAMING PLAN- 60 UNIT BEQ B&C
APPROVED
DATE
EFD FOR COMMANDER, NAVFAC

Naval Facilities Engineering Command
Southern Division
Charleston, South Carolina

RECORD DRAWING DATE BLANK
CODE I.D. NO. 80091
DRAWING SIZE: D
SPEC. NO.06-98-0690
CONSTRN. CONTR. NO. N62467-98-D-0690
NAVFAC DRAWING NO. 5364422
SHEET 14 OF 19
SSP-41

$$$$ USERNAME $$$$ $$$$ DATE&TIME $$$$ $$$$ DESIGN FILE NAME $$$$

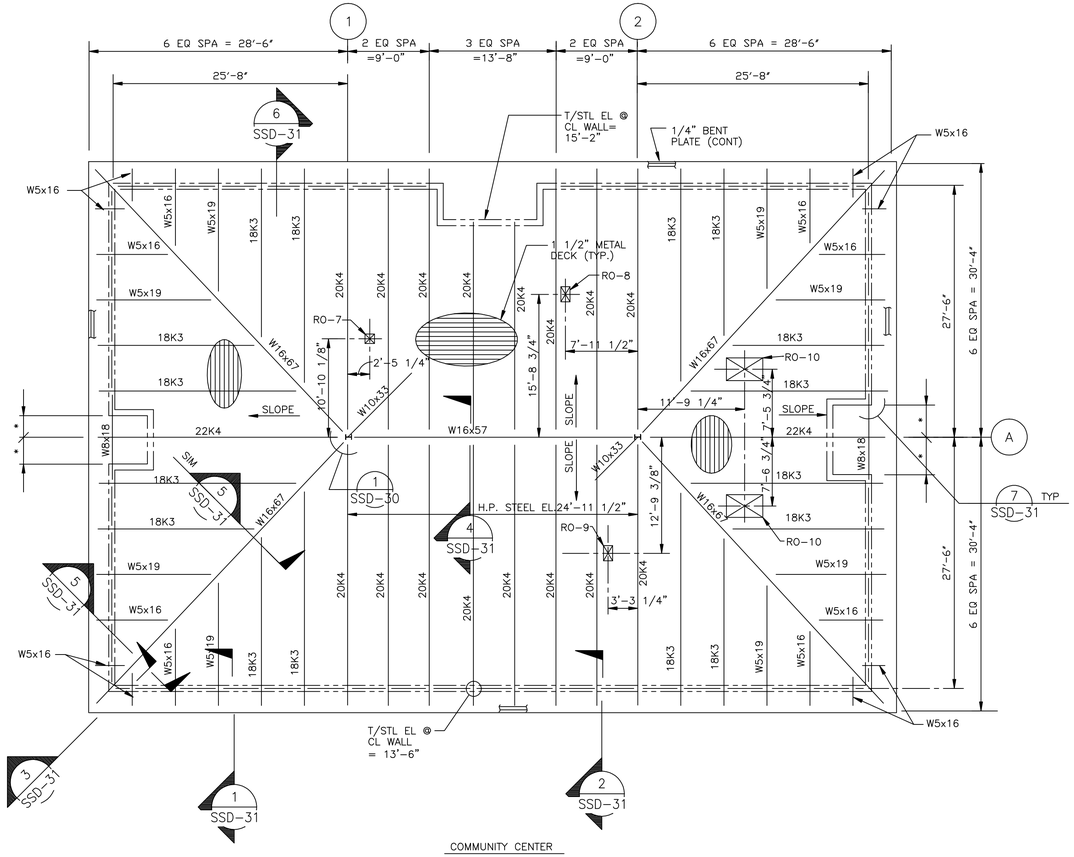

COMMUNITY CENTER

ROOF FRAMING PLAN

1/8"=1'-0'

NOTES

1. SEE ARCH DWGS FOR T/CMU WALL ELEVATIONS
2. * DENOTES DIMENSIONS ON ARCH DWGS

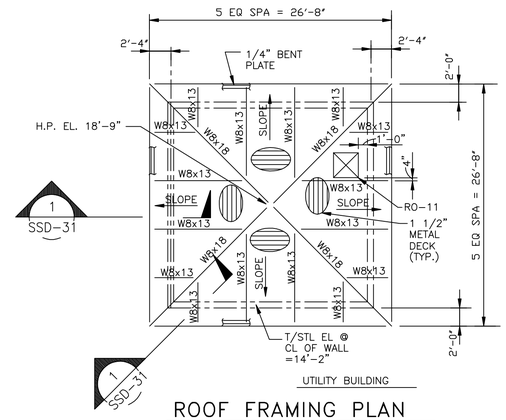

UTILITY BUILDING

ROOF FRAMING PLAN

1/8"=1'-0'

NOTES

1. SEE ARCH. DWGS. FOR T/CMU WALL ELEVATIONS

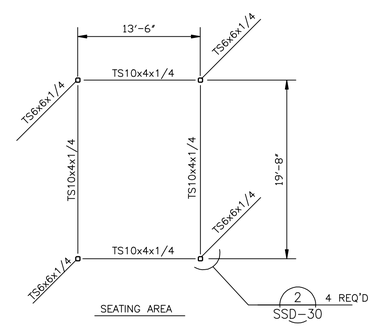

SEATING AREA

ROOF FRAMING PLAN

1/8"=1'-0'

T/STL. EL. 10'-0"

NORTH

0 4 8 16 24
1/8"=1'-0"

LOCKWOOD GREENE
Consulting•Design•Construction
J.A. JONES
OF THE CAROLINAS

DSGN	TCLJ	CHK	DVJK
DR	NJM		
SUPV		CH ENGR	
SUBMITTED BY (FIRM MEMBER-TITLE): FRIDDIE DANIEL VP			DATE 03MAY99
TECHNICAL BRANCH			
			FPE

DRAWING REVISIONS

Rev.	Description	Prep By	Date	Approvd.
0	FINAL DESIGN SUBMITTAL	DK	03MAY99	JBS
1	ISSUE FOR RECORD	AJB	01JUN01	JBS

MCAS
BEAUFORT, S.C.
BACHELOR ENLISTED QUARTERS - PHASE IV
STRUCTURAL
ROOF FRAMING PLANS- MISC.

APPROVED:
DATE
ETD FOR COMMANDER, NAVFAC

Naval Facilities Engineering Command
Southern Division
Charleston, South Carolina

RECORD DRAWING DATE
01JUN01

CODE I.D. NO. 80091
DRAWING SIZE: D
SPEC. NO.06-98-0690
CONSTRN. CONTR. NO. N62467-98-D-0690
NAVFAC DRAWING NO. 5364423
SHEET 15 OF 19
SSP-42

$$$$ USERNAME $$$$ $$$$ DATE&TIME $$$$ $$$$ DESIGN FILE NAME $$$$

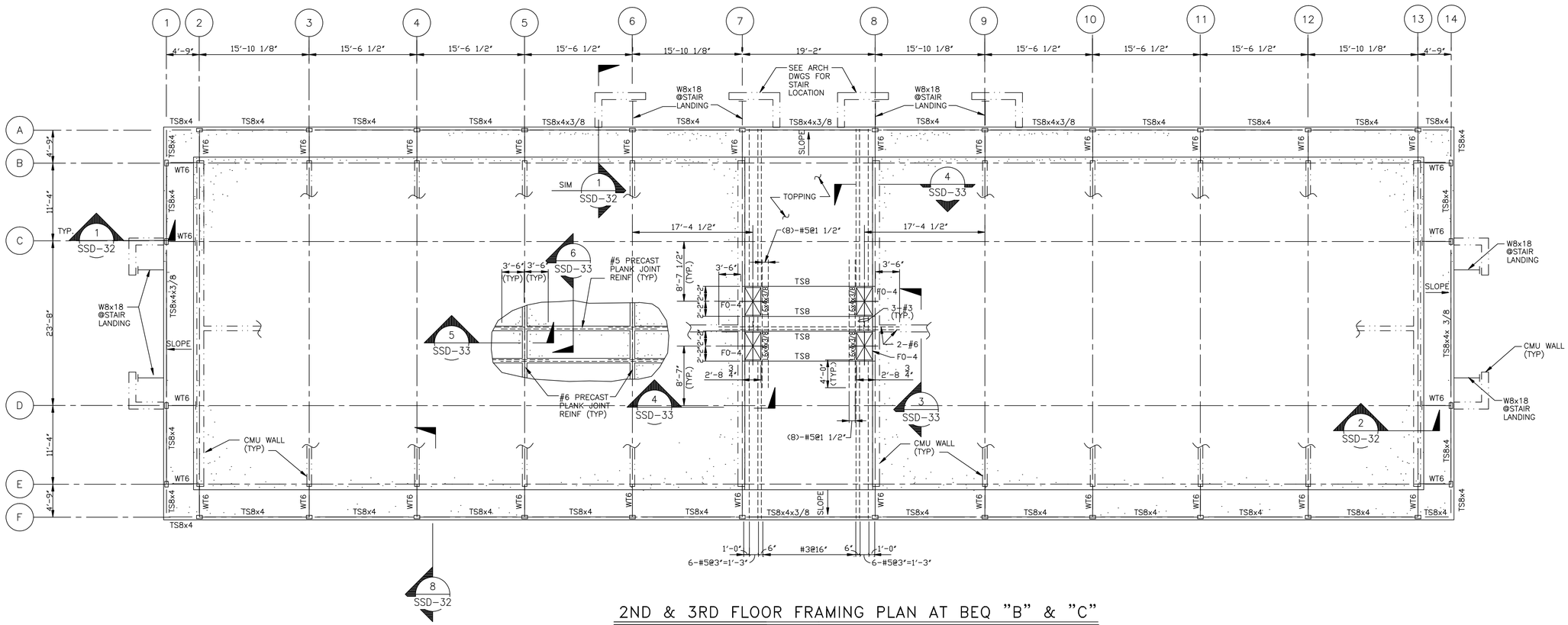

2ND & 3RD FLOOR FRAMING PLAN AT BEQ "B" & "C"

1/8"=1'-0'

NOTES:
1. TS8x4 DENOTES TS8x4x 1/4
2. WT6 DENOTES WT6x17.5 (GRADE 50) W/ BOT. WT6 @ EL. 9'-2" @ 2ND FLOOR AND EL. 19'-0 1/2" @ 3RD FLOOR.
3. T/TS8x4 EL. 9'- 2 1/2" @ 2ND FLOOR AND EL. 19'-1" @ 3RD FLOOR.
4. FOR TYPICAL STAIR INFORMATION, SEE SECTIONS 7 & 8 ON DWG. SSD-30.
5. T/TYP. HOLLOW CORE PLANK EL. 9'-10 1/2" @ 2ND FLOOR AND EL. 19'-9" @ 3RD FLOOR.

0 4 8 16 24
1/8"=1'-0"

J.A. JONES MANAGEMENT SERVICES
J.A. JONES OF THE CAROLINAS
LOCKWOOD GREENE Consulting•Design•Construction

DSGN TCLJ	DR NM	CHK DVK	
SUPV	CH ENGR		
SUBMITTED BY (FIRM MEMBER-TITLE): FIRDIZ ISRAEL VP			DATE
TECHNICAL BRANCH			
FPE			

DRAWING REVISIONS

Rev.	Description	Prep By	Date	Approvd.
0	FINAL DESIGN SUBMITTAL	DK	(DMMYYS)	JBS
1	ISSUE FOR RECORD	AJB	01JUN03	AJB

MCAS
BEAUFORT, S.C.
BACHELOR ENLISTED QUARTERS - PHASE IV
STRUCTURAL
2nd & 3rd FLR FRAMING PLAN- 60 UNIT BEQ B&C
APPROVED
DATE
ED FOR COMMANDER, NAVFAC

Naval Facilities Engineering Command
Southern Division
Charleston, South Carolina

RECORD DRAWING DATE 01JUN03
CODE I.D. NO. 80091
DRAWING SIZE: D
SPEC. NO.06-98-0690
CONSTRN. CONTR. NO. N62467-98-D-0690
NAVFAC DRAWING NO. 5364424
SHEET 16 OF 19
SSP-43

$$$$ USERNAME $$$$ $$$$ DATE&TIME $$$$ $$$$ DESIGN FILE NAME $$$$

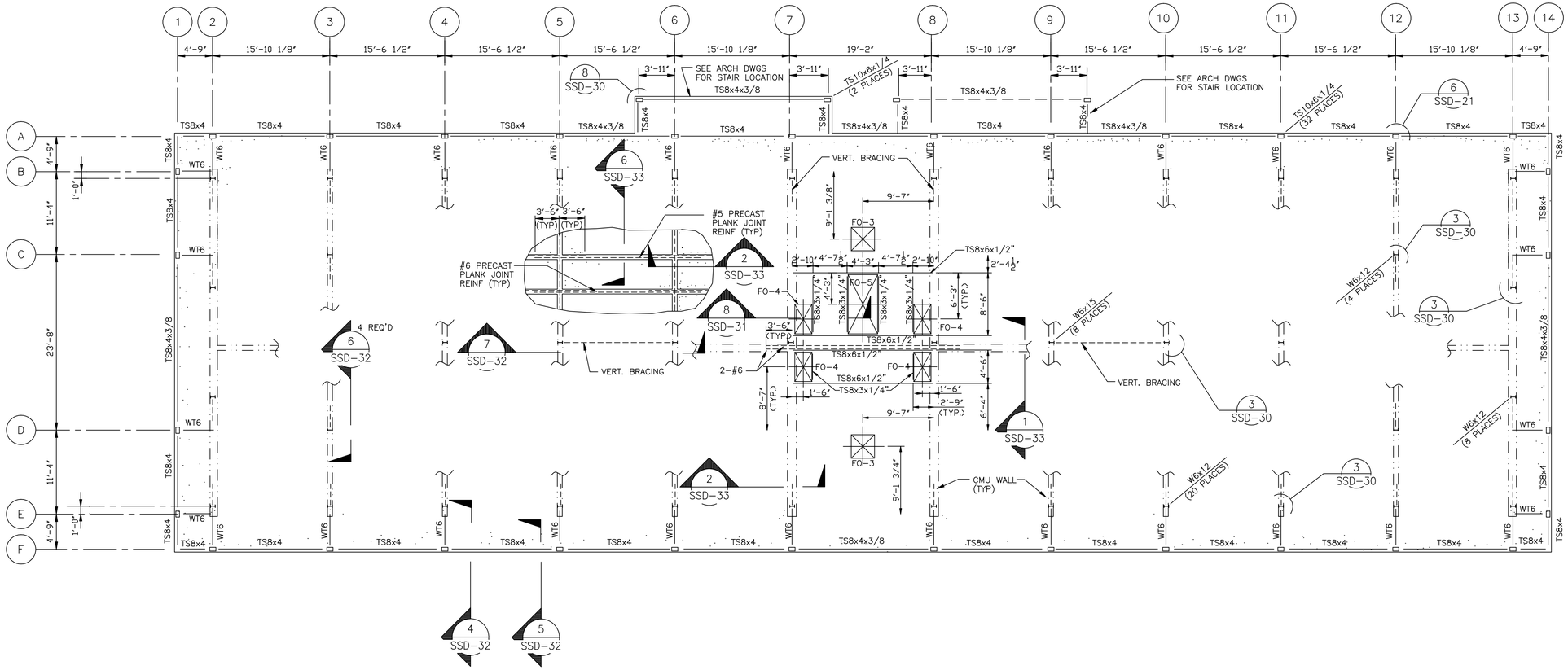

ATTIC FRAMING PLAN AT BEQ "B" & "C"

1/8"=1'-0'

NOTES:
1. TS8x4 DENOTES TS 8x4x 1/4"
2. WT6 DENOTES WT6x17.5 (GRADE 50) W/ BOT. STEEL EL. 29'-1"
3. T/TS8x4 EL. 29'-1 1/2" UNO
4. T/CONC. HOLLOW CORE PLANKS EL. 29'-7 1/2"
5. T/CMU WALL @ STAIR EL. 23'-6 1/2"

0 4 8 16 24
1/8"=1'-0"

LOCKWOOD GREENE
Consulting·Design·Construction
J.A. JONES OF THE CAROLINAS
DESIGN ENGINEERS ARCHITECTS BUILDERS

DSGN	TCLJ	
DR	NM	
CHK	DV/K	
SUPV		
CH. ENGR		
SUBMITTED BY (FIRM MEMBER-TITLE)	FRODIZ ISRAEL VP	DATE 03MAY99
TECHNICAL BRANCH		
FPE		

DRAWING REVISIONS

Rev.	Description	Prep By	Date	Approvd.
0	FINAL DESIGN SUBMITTAL	DK	03MAY99	JBS
1	ISSUE FOR RECORD	AJB	01JUN01	JBS

MCAS BEAUFORT, S.C.

BACHELOR ENLISTED QUARTERS - PHASE IV

STRUCTURAL

ATTIC FRAMING PLAN- 60 UNIT BEQ B&C

APPROVED DATE

ETD FOR COMMANDER, NAVFAC

Naval Facilities Engineering Command
Southern Division
Charleston, South Carolina

RECORD DRAWING DATE 01JUN01

CODE I.D. NO. 80091

DRAWING SIZE: D

SPEC. NO.06-98-0690

CONSTRN. CONTR. NO. N62467-98-D-0690

NAVFAC DRAWING NO. 5364425

SHEET 17 OF 19

SSP-44

$$$$ USERNAME $$$$ $$$$ DATE&TIME $$$$ $$$$ DESIGN FILE NAME $$$$

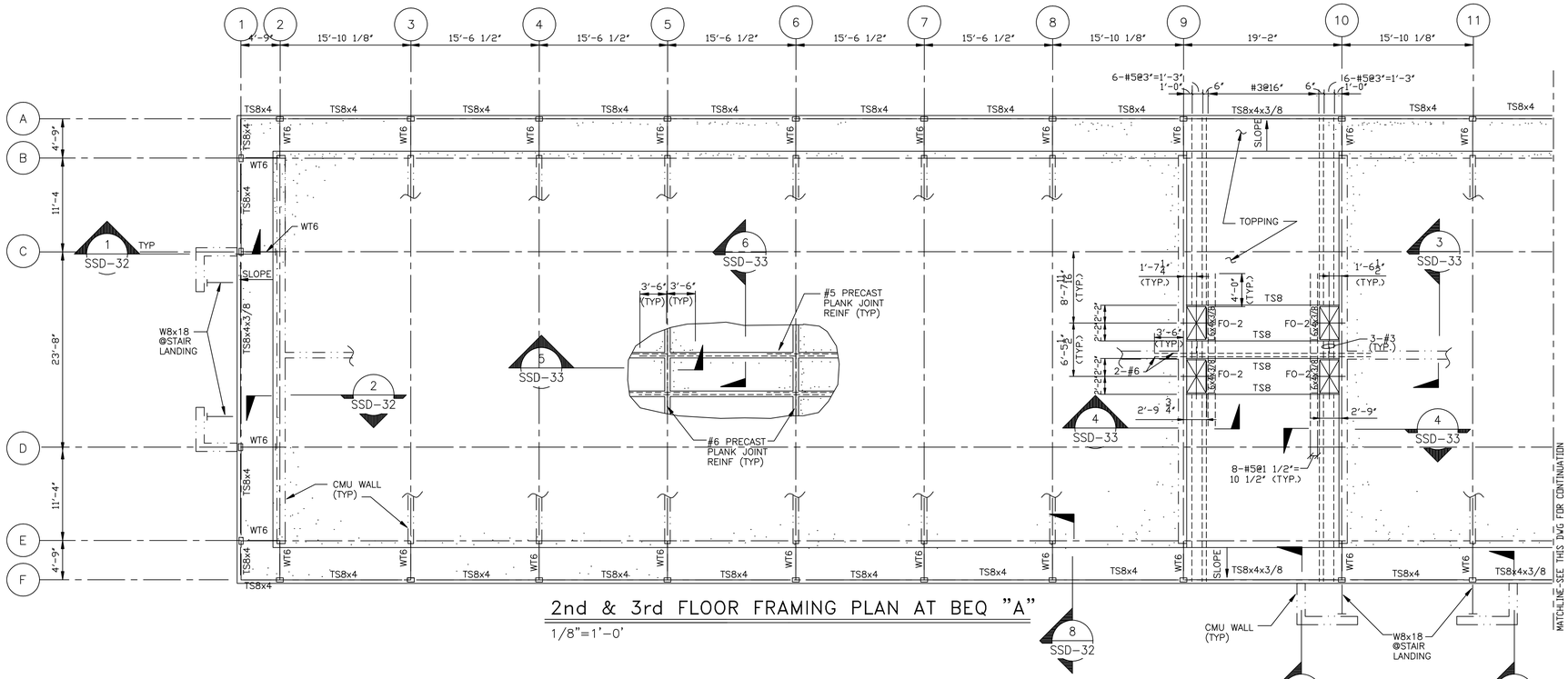

2nd & 3rd FLOOR FRAMING PLAN AT BEQ "A"

1/8"=1'-0'

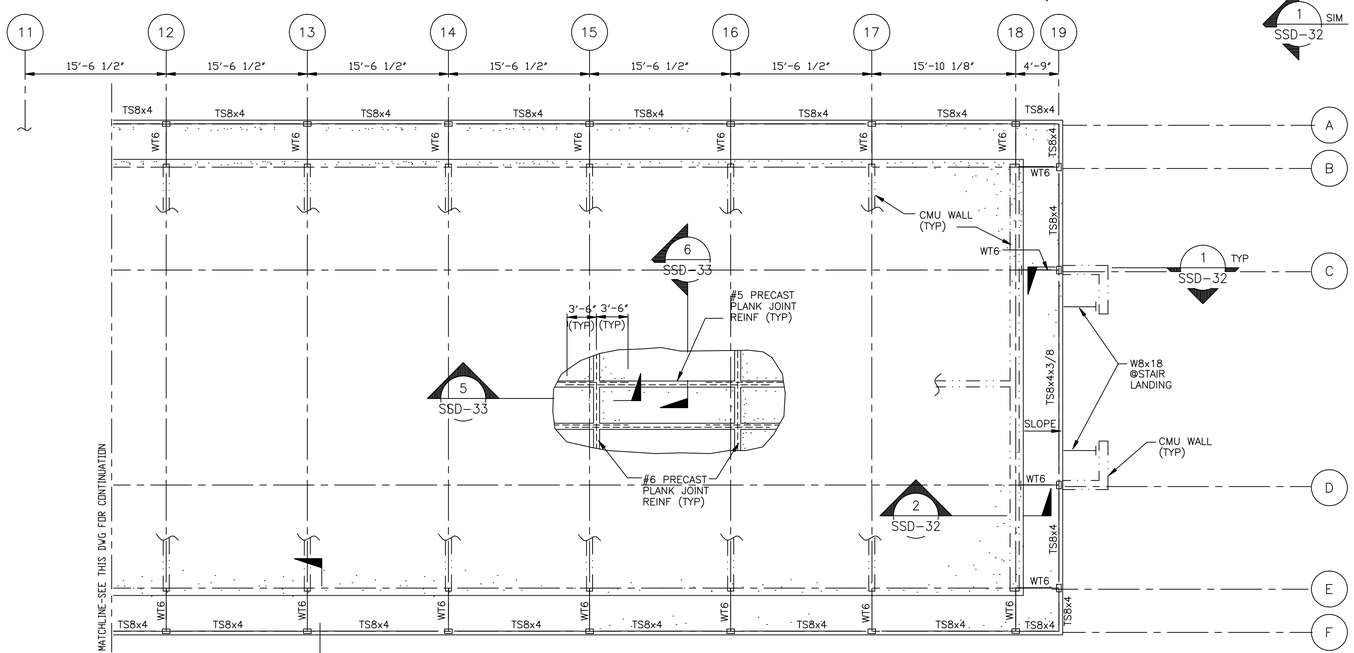

2nd & 3rd FLOOR FRAMING PLAN AR BEQ "A"

1/8"=1'-0'

1. TS8x4 DENOTES TS8x4x1/4
2. WT6 DENOTES WT6x17.5 (GRADE 50) WITH BOTT. OF WT6 @ EL 9'-2" @ 2ND FLR. AND EL 19'-0 1/2" @ 3RD FLOOR.
3. T/TS8x4 EL 9'-2 1/2" @ 2ND FLOOR AND EL 19'-1" @ 3RD FLOOR.
4. FOR TYPICAL STAIR INFORMATION, SEE SECTIONS 7 & 8 ON DWG. SSD-30.
5. T/TYPICAL HOLLOW CORE PLANK EL. 9'-10 1/2" AT 2ND FLOOR AND EL 19'-9" AT 3RD FLOOR.

NORTH

0 4 8 16 24
1/8"=1'-0"

J.A. JONES ENVIRONMENTAL SERVICES
J.A. JONES OF THE CAROLINAS
LOCKWOOD GREENE
Consulting•Design•Construction

DSGN TCLJ	DR NM	CHK DJVK	
SUPV	CH ENGR		
SUBMITTED BY (FIRM MEMBER-TITLE) FRITZ ISMAEL VP (DMY99)			DATE
TECHNICAL BRANCH			
FPE			

DRAWING REVISIONS

Rev.	Description	Prep By	Date	Approvd.
0	FINAL DESIGN SUBMITTAL	DK	(DMY99)	JBS
1	ISSUE FOR RECORD	AJB	01JAN01	JBS

MCAS BEAUFORT, S.C.

BACHELOR ENLISTED QUARTERS - PHASE IV

STRUCTURAL

2ND & 3RD FLOOR FRAMING PLAN- 90 UNIT BEQ A

APPROVED

DATE ED FOR COMMANDER, NAVFAC

Naval Facilities Engineering Command
Southern Division
Charleston, South Carolina

RECORD DRAWING DATE (ELANE)

CODE I.D. NO. 80091
DRAWING SIZE: D
SPEC. NO.06-98-0690
CONSTRN. CONTR. NO. N62467-98-D-0690
NAVFAC DRAWING NO.

SHEET 18 OF 19

SSP-45

$$$$ USERNAME $$$$ $$$$ DATE&TIME $$$$ $$$$ DESIGN FILE NAME $$$$

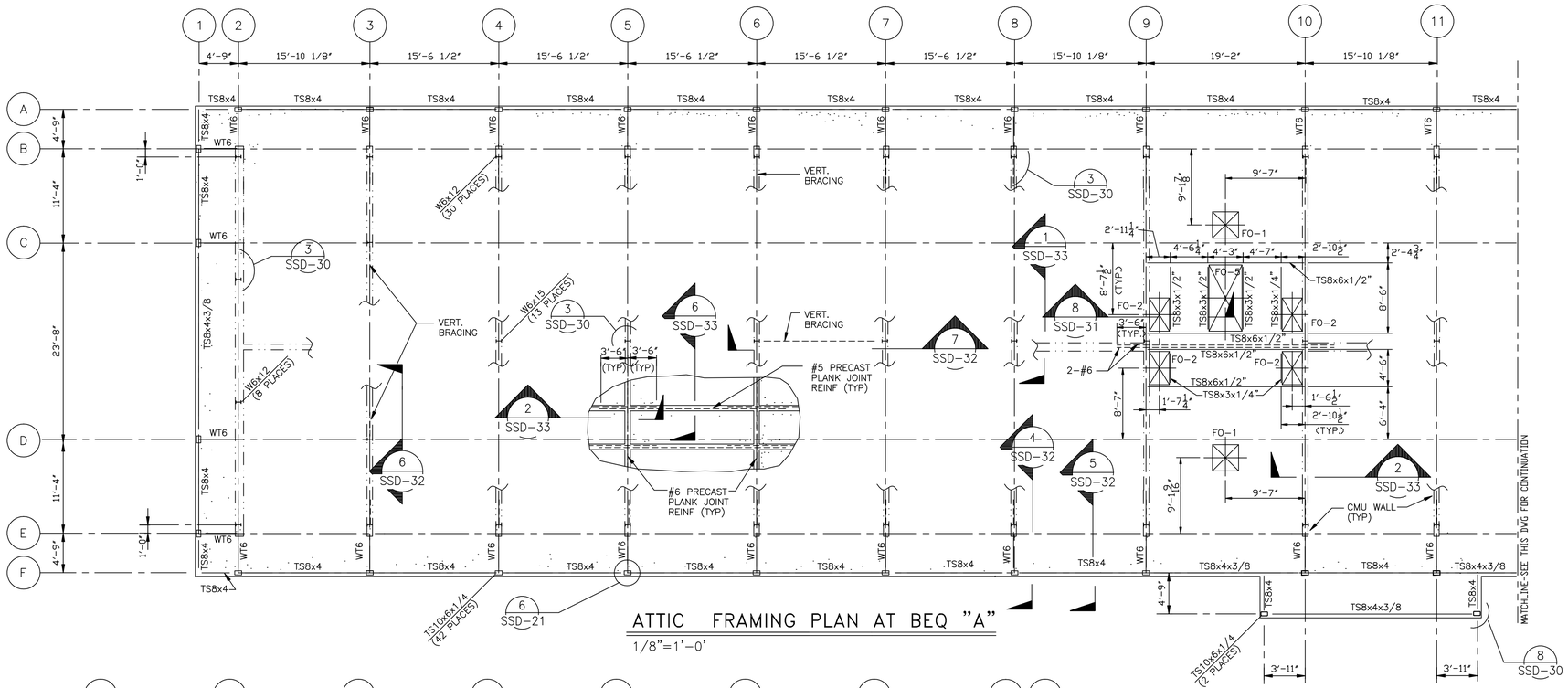

ATTIC FRAMING PLAN AT BEQ "A"

1/8"=1'-0'

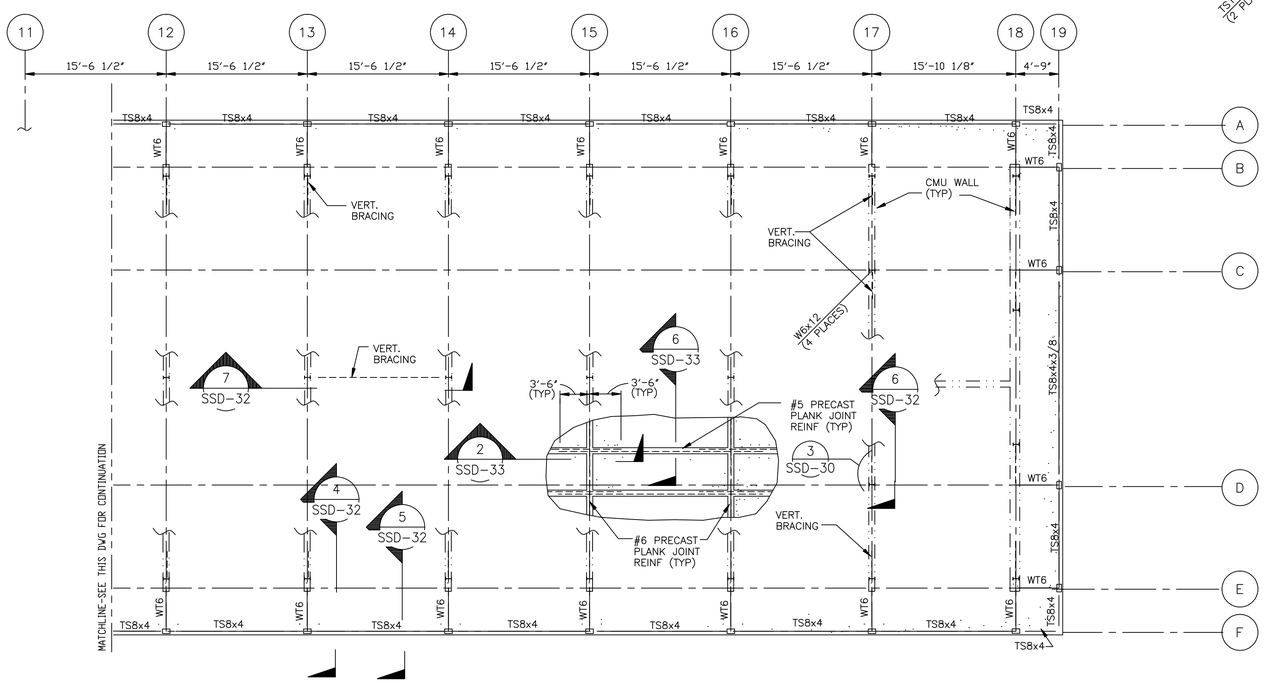

ATTIC FRAMING PLAN AT BEQ "A"

1/8"=1'-0'

NOTES:

1. TS8x4 DENOTES TS8x4x 1/4
2. WT6 DENOTES WT6x17.5 (GRADE 50) w/BOTT STL EL 29'-1"
3. T/TS8x4 EL 29'-1 1/2"
4. T/CONC HOLLOW CORE PLANKS EL 29'-7 1/2"
5. T/CMU WALL @ STAIR EL 23'-6 1/2"

NORTH

0 4 8 16 24

1/8"=1'-0"

J.A. JONES MANAGEMENT SERVICES, INC. OF THE CAROLINAS

LOCKWOOD GREENE Consulting•Design•Construction

DSGN TCLJ	DR NM	CHK DV/K	
SUPV	CH ENGR		
SUBMITTED BY (FIRM MEMBER-TITLE) FRIDDZ ISMAEL VP (DMY/Y)			DATE
TECHNICAL BRANCH			
FPE			

DRAWING REVISIONS

Rev.	Description	Prep By	Date	Approvd.
0	FINAL DESIGN SUBMITTAL	DK	(DMA/YR)	JBS
1	ISSUE FOR RECORD	A.JB	01JAN01	JBS

BEAUFORT, S.C.

MCAS

BACHELOR ENLISTED QUARTERS - PHASE IV

STRUCTURAL

ATTIC FRAMING PLAN- 90 UNIT BEQ A

APPROVED

DATE

ETD FOR COMMANDER, NAVFAC

Naval Facilities Engineering Command

Southern Division

Charleston, South Carolina

RECORD DRAWING DATE (CLAMS)

CODE I.D. NO. 80091

DRAWING SIZE: D

SPEC. NO.06-98-0690

CONSTRN. CONTR. NO. N62467-98-D-0690

NAVFAC DRAWING NO. 5364427

SHEET 19 OF 19

SSP-46

$$$$ USERNAME $$$$ $$$$ DATE&TIME $$$$ $$$$ DESIGN FILE NAME $$$$

HVAC SYMBOLS

- DUCT SIZE, 1ST FIGURE IS SIDE SHOWN,2ND IS SIDE NOT SHOWN.DIMENSIONS ARE INSIDE CLEAR (24"X12")
- FLANGED MOTOR OPERATED DAMPER (MOD)
- M –PNEUMATIC
- M E –ELECTRIC
- SQUARE ELBOW W/DOUBLE THICKNESS TURNING VANES
- RADIUS ELBOW
- SPLITTER DAMPER–MAIN DUCT
- MANUAL VOLUME DAMPER
- FIRE DAMPER
- CEILING SUPPLY OUTLET, SIZE & CAPACITY AS INDICATED
- CEILING RETURN OR EXHAUST, SIZE & CAPACITY AS INDICATED
- SIDEWALL SUPPLY OUTLET,SIZE & CAPACITY AS INDICATED
- SIDEWALL RETURN OR EXHAUST,SIZE & CAPACITY AS INDICATED
- ELBOW TURN UP (SUPPLY DUCT SHOWN)
- ELBOW TURN DOWN (SUPPLY DUCT SHOWN)
- DUCT TRANSITION
- FLEXIBLE DUCT CONNECTION
- INTERNALLY INSULATED/ ACOUSTICALLY LINED DUCT
- FLEXIBLE DUCT W/SPIN–IN FITTING AND DAMPER
- CROSS SECTION SUPPLY DUCT
- CROSS SECTION RETURN, EXHAUST DUCT, OR GRILLE
- DG DOOR GRILLE
- Ø ROUND DUCT
- AIR DEVICE DESIGNATION
- SD SMOKE DETECTOR
- LINEAR DIFFUSER (LD)
- UP GRADUAL RISE IN DUCT ELEVATION
- DN GRADUAL DROP IN DUCT ELEVATION
- T THERMOSTAT OR TEMPERATURE SENSOR
- CEILING EXHAUST FAN
- OR ROOF MOUNTED EXHAUST FAN OR RELIEF VENT
- UNIT HEATER (PROPELLER) HORIZONTAL TYPE
- UNIT HEATER (PROPELLER) VERTICAL TYPE
- ROOF MOUNTED INTAKE HOOD OR SUPPLY FAN

PLUMBING & FIRE PROTECTION SYMBOLS

- NEW PIPE UNDERGROUND
- NEW SERVICE PIPE ABOVEGROUND
- NEW DRAIN PIPE ABOVEGROUND
- NEW VENT PIPE ABOVEGROUND
- NEW VENT PIPE UNDERGROUND
- FRESH (POTABLE) WATER, COLD
- FRESH (POTABLE) WATER, HOT SUPPLY
- FRESH (POTABLE) WATER, HOT RETURN
- FLOOR DRAIN WITH TRAP
- HUB DRAIN WITH TRAP
- CLEANOUT
- FLOOR CLEANOUT
- WALL CLEANOUT
- HOSEBIBB
- WALL HYDRANT
- POST INDICATOR VALVE
- PRESSURE GAUGE WITH GAUGE COCK
- BFP BACKFLOW PREVENTER, REDUCED PRESSURE TYPE
- E2 FIRE EXTINGUISHER (NUMBER INDICATES TYPE)
- FHC FIRE HOSE CABINET
- FIRE HOSE RACK
- WATER MOTOR GONG
- SIAMESE –FIRE DEPARTMENT CONNECTION
- AUTOMATIC SPRINKLER RISER – WET
- AUTOMATIC SPRINKLER RISER – DRY/PREACTION
- "A" SHOCK ARRESTOR LETTER INDICATES "PDI" SIZE
- SERVICE X X X NUMBER RISER DIAGRAM SYMBOL
- SGR NUMBER SPRINKLER RISER SYMBOL

PIPING SYMBOLS

- PROCESS OR UTILITY LINE
- FLEXIBLE HOSE
- UNION
- FLANGE
- B/F BLIND FLANGE
- PIPING BELOW SLAB
- ADJUSTABLE FLOW CONTROL DEVICE
- FLEXIBLE CONNECTOR
- EXPANSION JOINT
- MALE COUPLING
- FEMALE COUPLING (HOSE CONNECTION)
- Y STRAINER (HOSE CONNECTION W/VALVE AND PLUG)
- A B LINE MATERIAL CHANGE
- REDUCER
- PIPE GUIDE
- PIPE ANCHOR
- OPEN DRAIN
- CLOSED DRAIN
- VTA VENT TO ATMOSPHERE
- VTR VENT THRU ROOF
- PIPE CAP
- (150) LINE PRESSURE
- T STEAM TRAP
- FLOW METER

ABBREVIATIONS

AAV	AUTOMATIC AIR VENT
ABV	ABOVE
ADV	AUTOMATIC DRAIN VALVE
AD	ACCESS DOOR/ACID DRAIN/AIR DRYER
AFF	ABOVE FINISHED FLOOR
AFG	ABOVE FINISHED GRADE
AHU	AIR HANDLING UNIT
AIR COND	AIR CONDITIONING
AL	ALUMINUM
ANSI	AMER. NATIONAL STND. INSTIT.
AP	ACCESS PANEL
APPROX	APPROXIMATE
ARCH	ARCHITECTURAL
AS	AIR SEPARATOR
ASR	AUTOMATIC SPRINKLER RISER
ATM	ATMOSPHERE
BF	BAG FILTERS
BFP	BACKFLOW PREVENTER
BDD	BACKDRAFT DAMPER
BFV	BUTTERFLY VALVE
BHP	BRAKE HORSEPOWER
BI	BACKWARD INCLINED
BLDG	BUILDING
BLV	BALL VALVE
BOD	BOTTOM OF DUCT/DAMPER
BOP	BOTTOM OF PIPE
BOS	BOTTOM OF STEEL
BOT	BOTTOM (ELEVATION OF EQUIPMENT)
BTUH	BRITISH THERMAL UNIT/HOUR
C TO C	CENTER TO CENTER
CF	COALESCING FILTER/CHEMICAL FEED
CFM	CUBIC FEET/MINUTE
CHW	CHILLED WATER
CHWS	CHILLED WATER SUPPLY
CHWR	CHILLED WATER RETURN
℄	CENTER LINE
CLG	CEILING
CNDS	CONDENSATE
CO	CLEANOUT
COL	COLUMN
COMP	COMPRESSOR
COND	CONDENSATE
CONN	CONNECTION
CPLG	COUPLING
CRES	CORROSION RESISTANT STEEL
CTRV	CONTROL VALVE
CR	CONDENSATE RETURN
CV	CHEMICAL VENT/CHECK VALVE
CWS/CWR	COOLING WATER SUPPLY/COOLING WATER RETURN
DB	DRY BULB
DBA	DECIBELS ABSOLUTE
DET	DETAIL
DG	DOOR GRILLE
DIA	DIAMETER
DIFF	DIFFUSER
DMPR	DAMPER
DN	DOWN
DWG	DRAWING
DX	DIRECT EXPANSION
EA	EACH
EMCS/EMS	ENERGY MANAGEMENT (& CONTROL) SYSTEM
EF	EXHAUST FAN
EL	ELEVATION
ELB	ELBOW
ELEC	ELECTRIC
ENTR	ENTERING
EQPT	EQUIPMENT
ER	EXHAUST REGISTER
ET	EXPANSION TANK
EWC	ELECTRIC WATER COOLER
EXH	EXHAUST
EXT	EXTINGUISHER OR EXTERNAL
F	FAN OR DEGREES FAHRENHEIT
FC	FLEXIBLE CONNECTION OR FAIL CLOSED
FCO	FLOOR CLEANOUT
FD	FLOOR DRAIN
FDC	FLEXIBLE DUCT CONNECTION/ FIRE DEPARTMENT CONNECTION
FEXT	FIRE EXTINGUISHER
FF	FINAL PARTICULATE FILTER
FHC	FIRE HOSE CABINET
FHR	FIRE HOSE RACK
FIN	FINISHED
FL/FLR	FLOOR
FM	FLOW METER
FO	FAIL OPEN
FOB	FLAT ON BOTTOM
FOT	FLAT ON TOP
FPM	FEET PER MINUTE
FPW	FIRE PROTECTION WATER
FRD	FIRE DAMPER
FRP	FIBERGLASS REINFORCED PLASTIC
FSI	FLOW SWITCH & INDICATOR
FS	FREEZESTAT
FT	FOOT/FEET
FV	FLOAT VALVE
FW	FRESH WATER
FWH	FRESH (POTABLE) WATER HOT
FWHR	FRESH (POTABLE) WATER HOT RETURN
GA	GAUGE
GALV	GALVANIZED
GFE	GOVT FURNISHED EQUIPMENT
GLV	GLOBE VALVE
GOV'T	GOVERNMENT
GPM	GALLONS PER MINUTE
GTV	GATE VALVE
GYP	GYPSUM
HB	HOSE BIBB
HC	HOSE CONNECTION
HD	HUB DRAIN
HGT	HEIGHT
HOA	HAND–OFF–AUTOMATIC
HP	HORSEPOWER OR HEAT PUMP
HR	HOUR
HTG	HEATING
HVAC	HEATING,VENT.,&AIR COND.
HW	HOT WATER
HWP	HOT WATER PUMP
HWR	HOT WATER RETURN
HWS	HOT WATER SUPPLY
HX	HEAT EXCHANGER
HZ	HERTZ
ID	INSIDE DIAMETER
IE	INVERT ELEVATION
IH	INTAKE HOOD
IN	INCHES
INDL	INDUSTRIAL
INSUL	INSULATION
KW	KILOWATT
KWH	KILOWATT HOUR
LAN	LOCAL AREA NETWORK
LAV	LAVATORY
LB	POUND
LCP	LOCAL CONTROL PANEL
LG	LENGTH
LPS	LOW PRESSURE STEAM
LVR	LOUVER
LV	LOCKABLE VALVE
M	MOTOR
MV	MOTORIZED VALVE
MAX	MAXIMUM
MBH	BTU/HR X 1000
MECH	MECHANICAL
MECH RM	MECHANICAL EQUIPMENT ROOM
MFR	MANUFACTURER
MH	MANHOLE
MIN	MINIMUM
MISC	MISCELLANEOUS
MNTR	MONITOR
MOD	MOTOR OPERATED DAMPER
MTD	MOUNTED
MVD	MANUAL VOLUME DAMPER (SEE SYMBOL)
NA	NOT APPLICABLE
NASNI	NAVAL AIR STATION NORTH ISLAND
NC	NORMALLY CLOSED
NIC	NOT IN CONTRACT
NK	NECK
NO	NORMALLY OPEN
NTS	NOT TO SCALE
OA	OUTSIDE AIR
OAI	OUTSIDE AIR INTAKE
OC	ON CENTER
OD	OUTSIDE DIAMETER
O/F	OVERFLOW
OPER	OPERATING
OPNG	OPENING
ORD	ORDINARY
PD	PROCESS DRAIN
PDI	PLUMBING & DRAINAGE INSTITUTE
PG	PRESSURE GAUGE
PI	PRESSURE INDICATOR
P.I.V.	POST INDICATOR VALVE
P	PLATE THICKNESS OR PUMP
POC	POINT OF CONNECTION
PRESS	PRESSURE
PRV	PRESSURE REDUCING VALVE
PS	PRESSURE SWITCH
PSI	POUNDS PER SQUARE INCH
PSIG	POUNDS PER SQ. IN. GUAGE
PSV	PRESSURE SAFETY VALVE
PTHP	PACKAGED TERMINAL HEAT PUMP
PV	PROCESS VENT
PW	POTABLE WATER
PWH	POTABLE WATER HOT
PWHR	POTABLE WATER HOT RETURN
PWR	POTABLE WATER RETURN
PWS	POTABLE WATER SUPPLY
RA	RETURN AIR
RAG	RETURN AIR GRILLE
RAO	RETURN AIR OPENING
RCVR	RECEIVER
RD	ROOF DRAIN
REF	REFERENCE
REQD	REQUIRED
RFBFP	REDUCED FLOW BACKFLOW PREVENTER
RH	RELATIVE HUMIDITY OR RELIEF HOOD
RID	ROUND INDUSTRIAL DIFFUSER
RL	RAIN LEADER
RM	ROOM
RPM	REVOLUTIONS PER MINUTE
RR	RETURN REGISTER
RTU	REMOTE TERMINAL UNIT
SA	SUPPLY AIR/SERVICE AIR
SC	SAMPLE CONNECTION
SCD	SQUARE CEILING DIFFUSER
SCFM	STANDARD CUBIC FEET/MIN.
SCHED	SCHEDULE
S/D	SPLITTER DAMPER
SENS	SENSIBLE
SF	SUPPLY FAN/SQUARE FOOT
SOLV	SOLENOID VALVE
SP	STATIC PRESSURE
SPEC	SPECIAL SERVICE/SPECIFICATION
SQ	SQUARE
SR	SUPPLY REGISTER
SSD	SANITARY SOIL DRAIN
SST/SS	STAINLESS STEEL
STM/ST	STEAM
ST	STEAM TRAP/HIGH PRESSURE STEAM
STA	STATION
STD	STORM DRAIN
STL	STEEL
STRL	STRUCTURAL
SV	SANITARY VENT/SAFETY VALVE
SW	SERVICE WATER
SWD	SANITARY WASTE DRAIN
TA	THROW AWAY
TCV	TEMPERATURE CONTROL VALVE
TEMP	TEMPERATURE
TFW	TEMPERED FRESH WATER
TI	TEMPERATURE INDICATOR
TOD	TOP OF DUCT
TOS	TOP OF STEEL
TR	TRANSFER REGISTER
TS	TEMPERATURE SWITCH
TV	TURNING VANE
TYP	TYPICAL
UGND	UNDERGROUND
UH	UNIT HEATER
UON	UNLESS OTHERWISE NOTED
UTL	UTILITY
V	VENT/VALVE
VAV	VARIABLE AIR VOLUME
VH	VENTILATION HOOD
VEL	VELOCITY
VTA	VENT TO ATMOSPHERE
VTR	VENT THRU ROOF
VU	VENTILATING UNIT
W	WIDTH
WB	WET BULB
WCHR	WATER CHILLER
WCO	WALL CLEANOUT
WG	WATER GAUGE
WMG	WATER MOTOR GONG
WMS	WIRE MESH SCREEN
W/	WITH
W/O	WITHOUT

PIPING VALVES

- DIAPHRAGM VALVE
- CHECK VALVE
- NORMALLY OPEN GATE VALVE
- GLOBE VALVE
- NORMALLY OPEN BALL VALVE
- PLUG VALVE
- THREE WAY VALVE
- BUTTERFLY VALVE
- NEEDLE VALVE
- ANGLE VALVE
- NORMALLY CLOSED GATE VALVE
- NORMALLY CLOSED BALL VALVE
- CIRCUIT SETTER
- LOCKABLE VALVE
- S SOLENOID VALVE
- F AUTOMATIC DRAIN VALVE
- NORMALLY CLOSED GLOBE VALVE
- PRESSURE SAFETY VALVE
- PRESSURE REDUCING REGULATING VALVE
- BACK PRESSURE REGULATING VALVE
- FLOAT VALVE
- M FLOW CONTROL VALVE

MISCELLANEOUS SYMBOLS

- ROTARY BLOWER
- M MOTOR
- S STEAM PRESSURE POWERED
- H-O-A HAND–OFF–AUTOMATIC SWITCH
- M CENTRIFUGAL PUMP
- AIR INLET FILTER
- DRY CHEMICAL SPRAY NOZZLE
- SPECTACLE BLIND
- TI THERMOWELL
- AUTOMATIC AIR VENT
- BACKFLOW PREVENTER
- LEVEL GAGE GLASS
- M METERING PUMP
- TRAP, FLOAT TYPE, AIR
- STEAM TRAP
- PIPING BREAK TO SHOW PIPE UNDERNEATH
- M TOTALIZER FLOW METER

REFERENCE & IDENTIFICATION SYMBOLS

- SERVICE / SERVICE AIR / M–08 / DWG WHERE CONTINUED — DIRECTIONAL FLOW REFERENCE BLOCK
- –301 — EQUIPMENT TAG NO.
- DENOTES PACKAGE UNIT

SECTION OR DETAIL — SCALE

- 2 / A–6 — SECTION NUMBER / DETAIL NUMBER / DOOR DETAIL NUMBER
- A–5 — DWG. WHERE SECTION OR DETAIL IS CUT
- A–6 — DWG. WHERE SECTION OR DETAIL IS SHOWN
- 2 / A–6 — SECTION NUMBER / DWG. WHERE SECTION IS SHOWN
- AREA COVERED BY DETAIL
- 2 / A–6 — DETAIL NUMBER / DWG. WHERE DETAIL IS SHOWN
- DWG. WHERE ELEVATION IS SHOWN — 2 / A–6 — ELEVATION NUMBER
- 1 — DENOTES REVISION FROM LAST ISSUE, ENCIRCLED ITEMS CHANGED. NUMBER IN TRIANGLE INDICATES REVISION NUMBER.
- HOLD — DENOTES ITEMS ON HOLD.
- DENOTES ITEMS FURNISHED WITH EQUIPMENT.
- 1/S-10-5 — PENETRATION NO. / ELEVATION / STR.DWG.NO. — PENETRATIONS THRU CWA WALL.

GENERAL NOTES

1. DUCTWORK AND PIPING SHALL NOT PENETRATE WALLS, FLOOR SLAB OR CEILING SLAB EXCEPT AS SHOWN.
2. DUCTWORK AND PIPING INSTALLATION SHALL BE SO ARRANGED AS TO AVOID USING SPACE REQUIRED FOR NORMAL EQUIPMENT ACCESS FOR INSPECTION, PREVENTIVE MAINTENANCE, CLEANING OR REMOVAL OF COMPONENTS & ACCESSORIES FOR REPLACEMENT.
3. DUCTWORK & PIPING SHALL NOT BE INSTALLED TO EITHER BLOCK OR RESTRICT ACCESS TO EXHAUST FANS.
4. ALL WALL MOUNTED DUCT & PIPING SUPPORT BRACKETS SHALL HAVE THEIR EDGES GROUND SMOOTH SO AS NOT TO POSE A THREAT TO PERSONNEL SAFETY.
5. FIELD ROUTING OF SERVICES SHALL BE THROUGH DESIGNATED PENETRATIONS. OBTAIN CONTRACTING OFFICER'S APPROVAL FOR PROPOSED ROUTING AND/OR NEW PENETRATIONS, BEFORE PROCEEDING WITH INSTALLATION.
6. EQUIPMENT, DUCTWORK, FIXTURES, PIPING, FIRE PROTECTION, AND PLUMBING SHALL BE SUPPORTED AND RESTRAINED PER SEISMIC ZONE 3 REQUIREMENT IF NOT SPECIFICALLY INDICATED OR SPECIFIED.
7. ALL PIPING SHALL HAVE HIGH POINT VENT AND LOW POINT DRAIN VALVES.
8. FOR EXACT LOCATIONS OF CEILING MOUNTED AIR DIFFUSING EQUIPMENT SEE ARCHITECTURAL CEILING PLANS.
9. FOR EXACT LOCATIONS OF WALL LOUVERS SEE ARCHITECTURAL PLANS.

NOTE:
THIS IS A MASTER MECHANICAL SYMBOLS AND ABBREVIATIONS SHEET. ALL ITEMS SHOWN MAY NOT BE APPLICABLE TO THIS PROJECT.

JA. JONES ARCHITECTURE ENGINEERING SERVICES
LOCKWOOD GREENE OF THE CAROLINAS
Consulting·Design·Construction

DSGN	JPS/BMc	DR	TSS	CHK	PST
SUPV	BMc	CH ENGR	RSS		
SUBMITTED BY (FIRM MEMBER–TITLE)				DATE 03–MAY–96	
TECHNICAL BRANCH					
FPE					

DRAWING REVISIONS

Rev.	Description	Prep. By	Date	Approvd.
0	FINAL DESIGN SUBMITTAL	JPS/BMc	03–MY–96	BMc
1	ISSUE FOR RECORD	JPS	01JUN2001	RT

MCAS BEAUFORT, S.C.
BACHELOR ENLISTED QUARTERS – PHASE IV
HVAC/MECHANICAL/PLUMBING/FIRE PROTECTION
LEGEND SHEET

DATE
APPROVED
ETD FOR COMMANDER, NAVFAC

Naval Facilities Engineering Command
Southern Division
Charleston, South Carolina

RECORD DRAWING DATE 01–JUNE–2001
CODE I.D. NO. 80091
DRAWING SIZE: D
SPEC. NO.06–98–0690
CONSTRN. CONTR. NO. N62467–98–D–0690
NAVFAC DRAWING NO. 5364433
SHEET 1 OF 19
MHP–10

$$$$ USERNAME $$$$ $$$$ DATE&TIME $$$$ $$$$ DESIGN FILE NAME $$$$

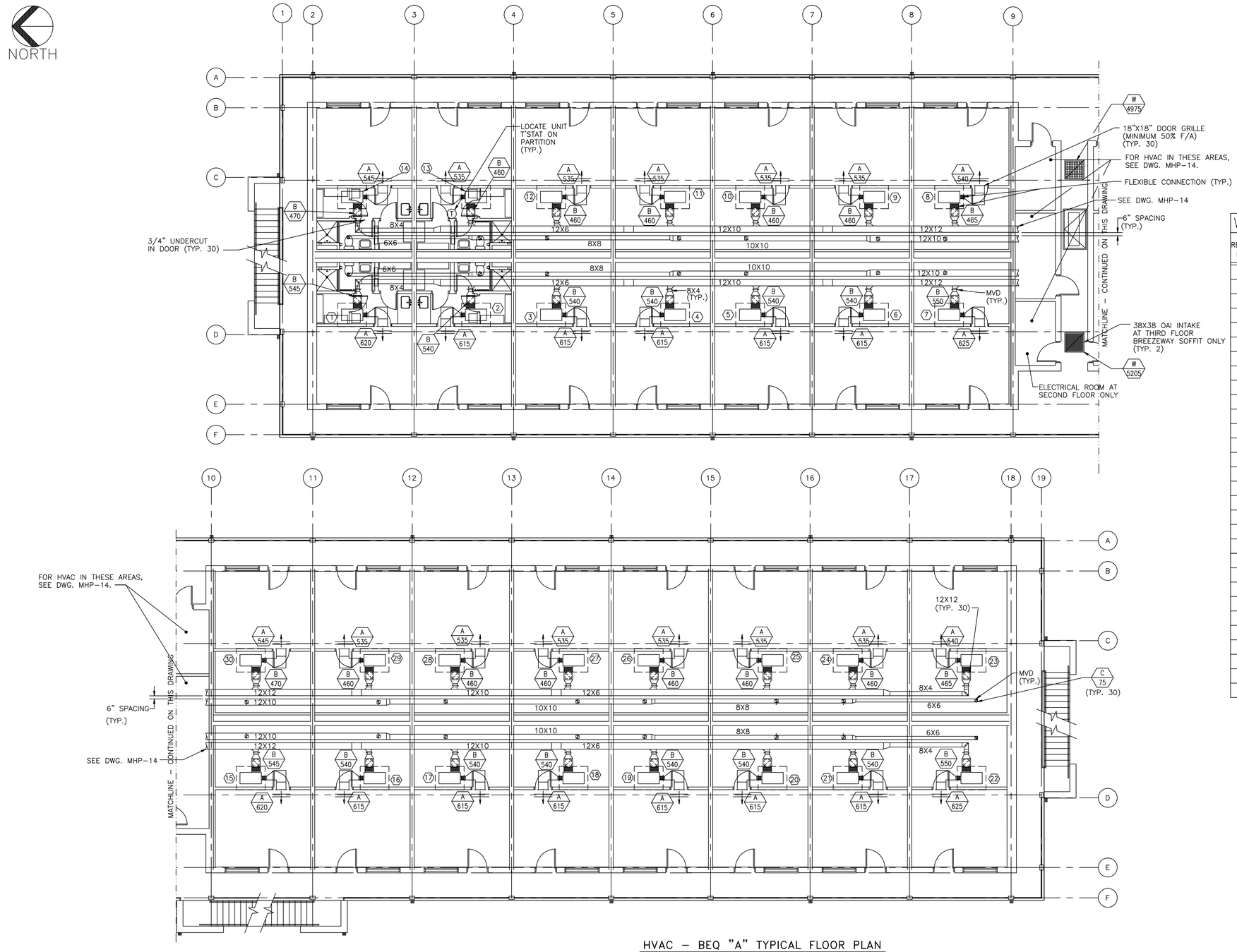

HVAC – BEQ "A" TYPICAL FLOOR PLAN

1/8"=1'-0"

WATER SOURCE HEAT PUMP			
REFERENCE NUMBER	BEQ A EQUIP. NO'S		
	1st FLOOR	2nd FLOOR	3rd FLOOR
1	WSHP-001	WSHP-031	WSHP-061
2	WSHP-002	WSHP-032	WSHP-062
3	WSHP-003	WSHP-033	WSHP-063
4	WSHP-004	WSHP-034	WSHP-064
5	WSHP-005	WSHP-035	WSHP-065
6	WSHP-006	WSHP-036	WSHP-066
7	WSHP-007	WSHP-037	WSHP-067
8	WSHP-008	WSHP-038	WSHP-068
9	WSHP-009	WSHP-039	WSHP-069
10	WSHP-010	WSHP-040	WSHP-070
11	WSHP-011	WSHP-041	WSHP-071
12	WSHP-012	WSHP-042	WSHP-072
13	WSHP-013	WSHP-043	WSHP-073
14	WSHP-014	WSHP-044	WSHP-074
15	WSHP-015	WSHP-045	WSHP-075
16	WSHP-016	WSHP-046	WSHP-076
17	WSHP-017	WSHP-047	WSHP-077
18	WSHP-018	WSHP-048	WSHP-078
19	WSHP-019	WSHP-049	WSHP-079
20	WSHP-020	WSHP-050	WSHP-080
21	WSHP-021	WSHP-051	WSHP-081
22	WSHP-022	WSHP-052	WSHP-082
23	WSHP-023	WSHP-053	WSHP-083
24	WSHP-024	WSHP-054	WSHP-084
25	WSHP-025	WSHP-055	WSHP-085
26	WSHP-026	WSHP-056	WSHP-086
27	WSHP-027	WSHP-057	WSHP-087
28	WSHP-028	WSHP-058	WSHP-088
29	WSHP-029	WSHP-059	WSHP-089
30	WSHP-030	WSHP-060	WSHP-090

NOTES:
1. AUXILIARY DRAIN PAN SHALL BE PROVIDED FOR EACH WSHP.

0 4 8 16 24
1/8"=1'-0"

J.A. JONES MANAGEMENT SERVICES
J.A. JONES OF THE CAROLINAS
LOCKWOOD GREENE
Consulting•Design•Construction

DSGN	JPS/BMc	DR	TSS	CHK PST
SUPV	BMc	CH ENGR	RSS	
SUBMITTED BY (FIRM MEMBER–TITLE)				DATE 03-MAY-99
TECHNICAL BRANCH				
FPE				

DRAWING REVISIONS

Rev.	Description	Prep By	Date	Approvd.
0	FINAL DESIGN SUBMITTAL	JPS/BMc	03-MY-99	BMc
1	ISSUE FOR RECORDS	JPS	01JUNE01	RT

MCAS BEAUFORT, S.C.

BACHELOR ENLISTED QUARTERS - PHASE IV

BEQ A (90 UNITS)

HVAC – TYPICAL FLOOR PLAN

APPROVED DATE

Naval Facilities Engineering Command
Southern Division
Charleston, South Carolina

ETD FOR COMMANDER, NAVFAC

RECORD DRAWING DATE 01-JUNE-2001
CODE I.D. NO. 80091
DRAWING SIZE: D
SPEC. NO.06-98-0690
CONSTRN. CONTR. NO. N62467-98-D-0690
NAVFAC DRAWING NO. 5364434
SHEET 2 OF 19

MHP-11

$$$$ USERNAME $$$$ $$$$ DATE&TIME $$$$ $$$$ DESIGN FILE NAME $$$$

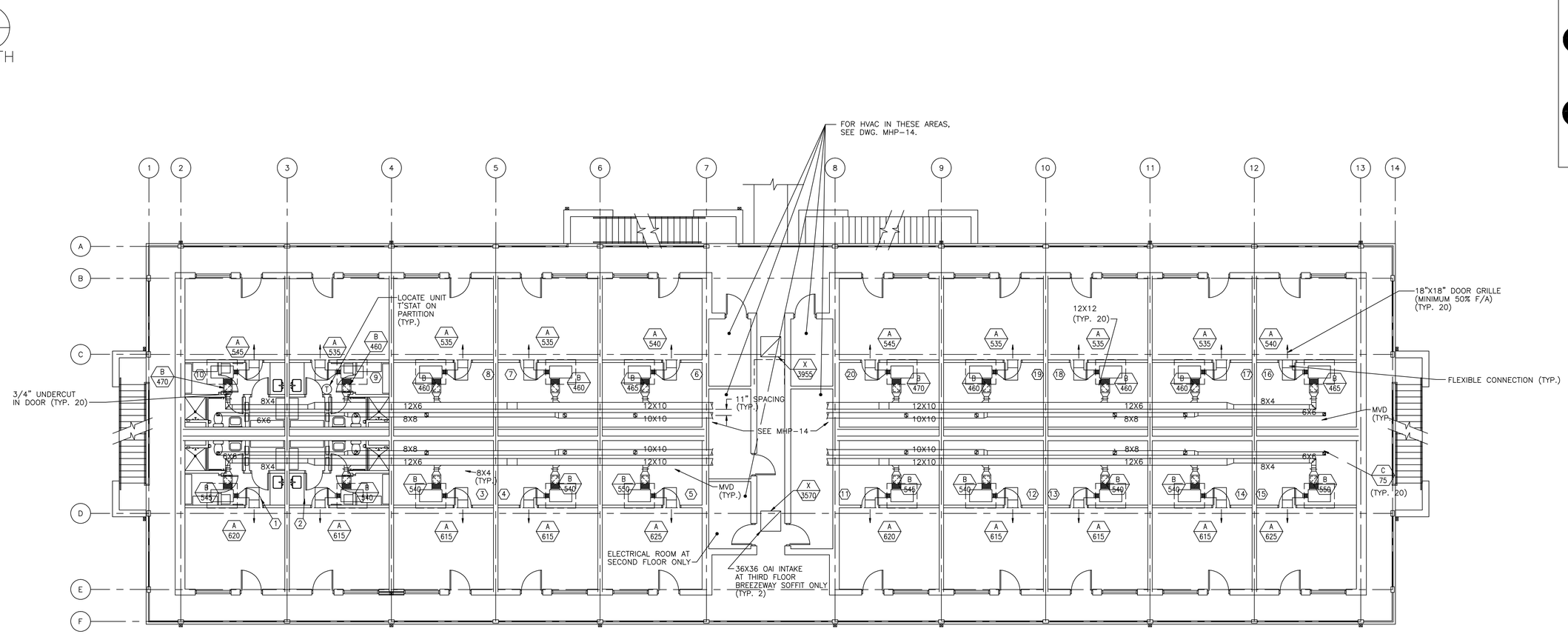

HVAC – BEQ "B" & "C" TYPICAL FLOOR PLAN

1/8"=1'-0"

WATER SOURCE HEAT PUMP						
REFERENCE NUMBER	BEQ B EQUIP. NO'S			BEQ C EQUIP. NO'S		
	1st FLOOR	2nd FLOOR	3rd FLOOR	1st FLOOR	2nd FLOOR	3rd FLOOR
1	WSHP-091	WSHP-111	WSHP-131	WSHP-151	WSHP-171	WSHP-191
2	WSHP-092	WSHP-112	WSHP-132	WSHP-152	WSHP-172	WSHP-192
3	WSHP-093	WSHP-113	WSHP-133	WSHP-153	WSHP-173	WSHP-193
4	WSHP-094	WSHP-114	WSHP-134	WSHP-154	WSHP-174	WSHP-194
5	WSHP-095	WSHP-115	WSHP-135	WSHP-155	WSHP-175	WSHP-195
6	WSHP-096	WSHP-116	WSHP-136	WSHP-156	WSHP-176	WSHP-196
7	WSHP-097	WSHP-117	WSHP-137	WSHP-157	WSHP-177	WSHP-197
8	WSHP-098	WSHP-118	WSHP-138	WSHP-158	WSHP-178	WSHP-198
9	WSHP-099	WSHP-119	WSHP-139	WSHP-159	WSHP-179	WSHP-199
10	WSHP-100	WSHP-120	WSHP-140	WSHP-160	WSHP-180	WSHP-200
11	WSHP-101	WSHP-121	WSHP-141	WSHP-161	WSHP-181	WSHP-201
12	WSHP-102	WSHP-122	WSHP-142	WSHP-162	WSHP-182	WSHP-202
13	WSHP-103	WSHP-123	WSHP-143	WSHP-163	WSHP-183	WSHP-203
14	WSHP-104	WSHP-124	WSHP-144	WSHP-164	WSHP-184	WSHP-204
15	WSHP-105	WSHP-125	WSHP-145	WSHP-165	WSHP-185	WSHP-205
16	WSHP-106	WSHP-126	WSHP-146	WSHP-166	WSHP-186	WSHP-206
17	WSHP-107	WSHP-127	WSHP-147	WSHP-167	WSHP-187	WSHP-207
18	WSHP-108	WSHP-128	WSHP-148	WSHP-168	WSHP-188	WSHP-208
19	WSHP-109	WSHP-129	WSHP-149	WSHP-169	WSHP-189	WSHP-209
20	WSHP-110	WSHP-130	WSHP-150	WSHP-170	WSHP-190	WSHP-210

NOTES:
1. AUXILIARY DRAIN PAN SHALL BE PROVIDED FOR EACH WSHP.

0 4 8 16 24
1/8"=1'-0"

J.A. JONES MANAGEMENT SERVICES, INC. OF THE CAROLINAS
LOCKWOOD GREENE
Consulting•Design•Construction

DSGN JPS/BMc	DR TSS	CHK PST	
SUPV BMc	CH ENGR RSS		
SUBMITTED BY (FIRM MEMBER–TITLE) Greg Smith V.P.			DATE 03-MAY-99
TECHNICAL BRANCH			
FPE			

DRAWING REVISIONS

Rev.	Description	Prep. By	Date	Approvd.
0	FINAL DESIGN SUBMITTAL	JPS/BMc	03-MY-99	BMc
1	ISSUE FOR RECORD	JPS	01JUN01	RT

BEAUFORT, S.C.
MCAS
BACHELOR ENLISTED QUARTERS – PHASE IV
BEQ B & C (60 UNITS EACH)
HVAC – TYPICAL FLOOR PLAN
APPROVED
DATE
ETD FOR COMMANDER, NAVFAC

Naval Facilities Engineering Command
Southern Division
Charleston, South Carolina

RECORD DRAWING DATE 01-JUNE-2001
CODE I.D. NO. 80091
DRAWING SIZE: D
SPEC. NO.06-98-0690
CONSTRN. CONTR. NO. N62467-98-D-0690
NAVFAC DRAWING NO. 5364435
SHEET 3 OF 19
MHP-12

$$$$ USERNAME $$$$ $$$$ DATE&TIME $$$$ $$$$ DESIGN FILE NAME $$$$

NORTH

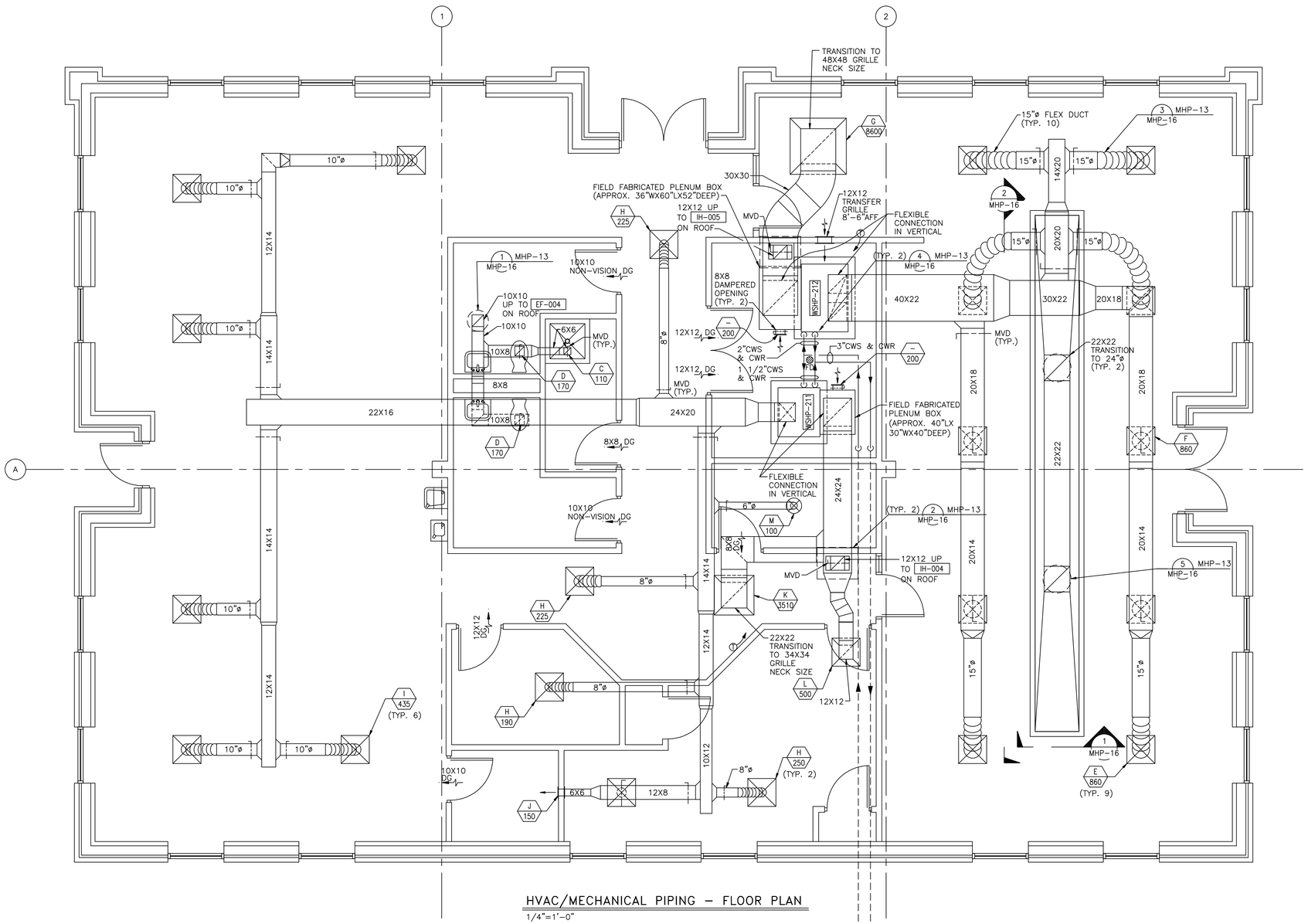

HVAC/MECHANICAL PIPING – FLOOR PLAN

1/4"=1'-0"

3"CWS & CWR (SEE DWG. CUP-08 FOR CONTINUATION)

NOTES:

1. PROVIDE WSHP-211 AND WSHP-212 WITH MINIMUM 4" HOUSEKEEPING PAD.
2. FIELD ROUTE WSHP-211 AND WSHP-212 CONDENSATE DRAIN LINES TO FLOOR DRAIN (PROVIDE P-TRAP).

0 4 8 12
1/4"=1'-0"

J.A. JONES MANAGEMENT SERVICES
J.A. JONES OF THE CAROLINAS
LOCKWOOD GREENE
Consulting•Design•Construction

DSGN JPS/BMc	DR TSS	CHK PST	
SUPV BMc	CH ENGR RSS		
SUBMITTED BY (FIRM MEMBER-TITLE) Greg Smith V.P.			DATE 03-MAY-99
TECHNICAL BRANCH			
FPE			

DRAWING REVISIONS

Rev.	Description	Prep By	Date	Approvd.
0	FINAL DESIGN SUBMITTAL	JPS/BMc	03-MAY-99	BMc
1	MISCELLANEOUS CHANGES	BMc	05-MAY-99	
2	ISSUE FOR RECORD	JPS	01-JUNE01RT	

MCAS BEAUFORT, S.C.

BACHELOR ENLISTED QUARTERS – PHASE IV

COMMUNITY CENTER

HVAC/MECHANICAL PIPING – FLOOR PLAN

APPROVED DATE

ETD FOR COMMANDER, NAVFAC

Naval Facilities Engineering Command
Southern Division
Charleston, South Carolina

RECORD DRAWING DATE 01-JUNE-2001

CODE I.D. NO. 80091

DRAWING SIZE: D

SPEC. NO.06-98-0690

CONSTRN. CONTR. NO. N62467-98-D-0690

NAVFAC DRAWING NO. 5364436

SHEET 4 OF 19

MHP-13

$$$$ USERNAME $$$$ $$$$ DATE&TIME $$$$ $$$$ DESIGN FILE NAME $$$$

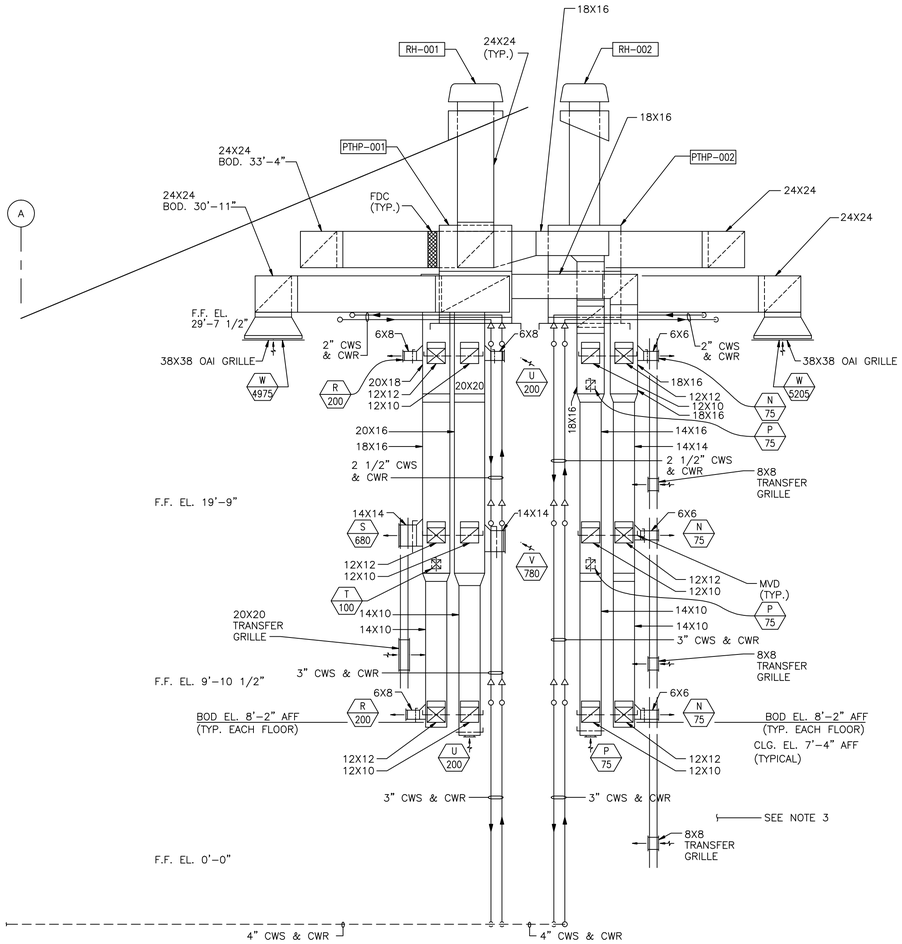

BEQ A (90 UNITS)
SECTION A MHP-15 / MHP-14
1/4"=1'-0"

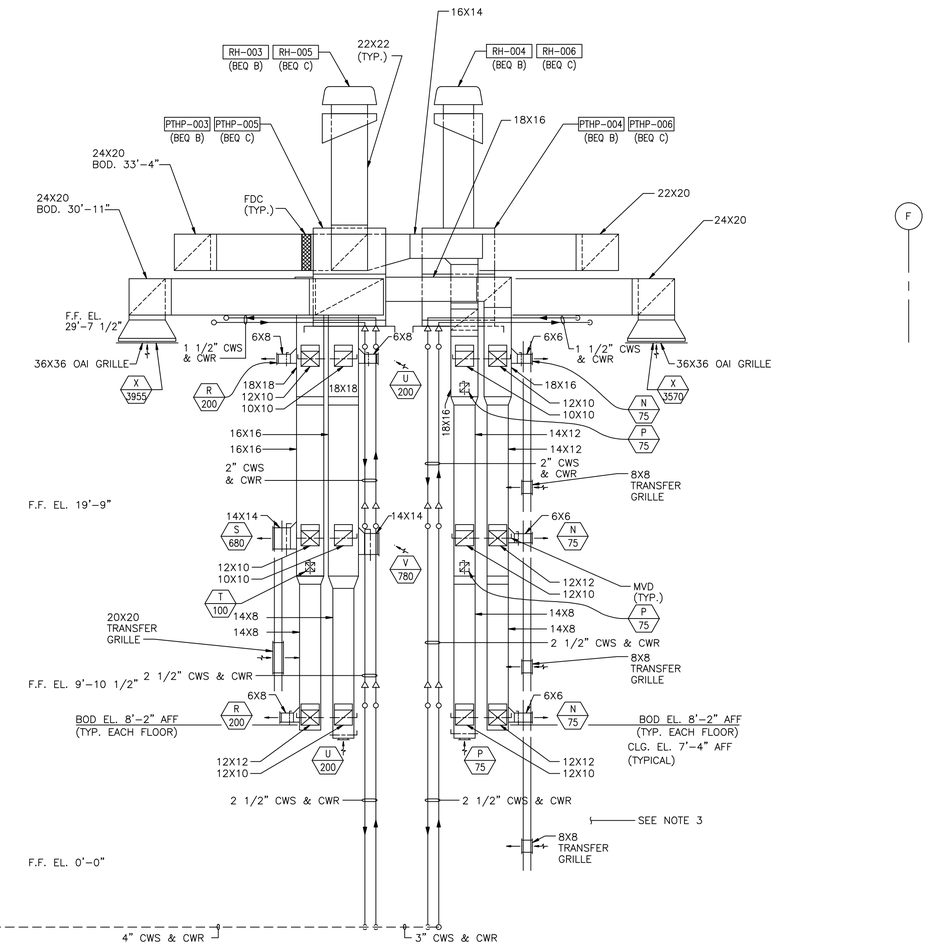

BEQ B & C (60 UNITS EACH)
SECTION B MHP-15 / MHP-14
1/4"=1'-0"

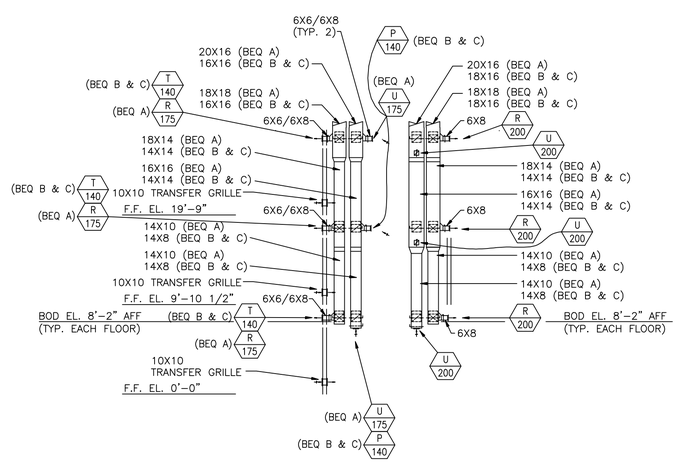

BEQ A, B & C
SOUTH CHASE/ELECTRICAL ROOM
SECTION C MHP-15 / MHP-14
1/8"=1'-0"

GENERAL NOTES:

1. SEE DWG. MHP-15 FOR ADDITIONAL REFERENCE.
2. SMOKE CONTROL, HORIZONTAL OR VERTICAL, FOR MECHANCAL AND ELECTRICAL WALL/FLOOR PENETRATIONS TO BE SEALED WITH UNITED STATES GYPSUM COMPANY'S SMOKE SEAL COMPOUND AND THERMAFIBER SAFING INSULATION, OR APPROVED EQUIVALENT SYSTEM. SMOKE SEAL COMPOUND MEETS ASTM E814, THERMAFIBER SAFING INSULATION MEETS ASTM C665. INSTALL FLOOR/CEILING AND WALL ASSEMBLIES PER MANUFACTURERS RECOMMENDATIONS.
3. THE AIR DISTRIBUTION INDICATED IS REPRESENTATIVE OF THE DUCT AND PIPING CHASES AND ELECTRICAL ROOMS NORTH OF THE CENTRAL BREEZEWAY.
4. STYLE "B" FIRE DAMPERS SHALL BE PROVIDED AT EACH VERTICAL FLOOR PENETRATION.

0 4 8 16 24
1/8"=1'-0"

0 4 8 12
1/4"=1'-0"

J.A. JONES MANAGEMENT SERVICES
J.A. JONES OF THE CAROLINAS
LOCKWOOD GREENE
Consulting•Design•Construction

DSGN JPS/BMc	DR TSS	CHK PST	
SUPV BMc	CH ENGR RSS		
SUBMITTED BY (FIRM MEMBER-TITLE) Greg Smith, V.P.			DATE 03-MAY-99
TECHNICAL BRANCH			
FPE			

DRAWING REVISIONS

Rev.	Description	Prep By	Date	Approvd.
0	FINAL DESIGN SUBMITTAL	JPS/BMc	03-MAY-99	BMc
1	REVISED AS NOTED			
2	ISSUE FOR RECORD	JPS	01-JUNE-01	RT

MCAS BEAUFORT, S.C.

BACHELOR ENLISTED QUARTERS - PHASE IV
BEQ A, B, C (90 & 60 UNITS)
HVAC - MECHANICAL ROOM SECTIONS

APPROVED

DATE ETD FOR COMMANDER, NAVFAC

Naval Facilities Engineering Command
Southern Division
Charleston, South Carolina

RECORD DRAWING DATE 01-JUNE-2001
CODE I.D. NO. 80091
DRAWING SIZE: D
SPEC. NO.06-98-0690
CONSTRN. CONTR. NO. N62467-98-D-0690
NAVFAC DRAWING NO. 5364437
SHEET 5 OF 19
MHP-14

$$$$ USERNAME $$$$ $$$$ DATE&TIME $$$$ $$$$ DESIGN FILE NAME $$$$

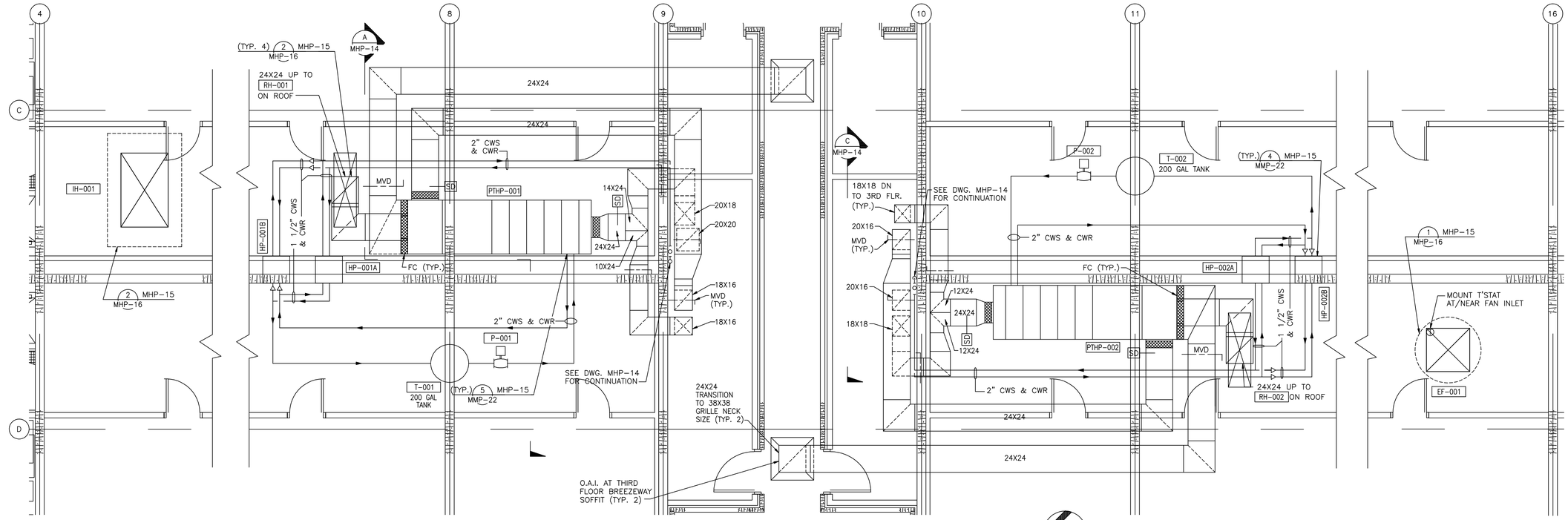

HVAC – BEQ A MECHANICAL ROOM PARTIAL ATTIC PLAN (90 UNITS)

1/4"=1'-0"

NORTH

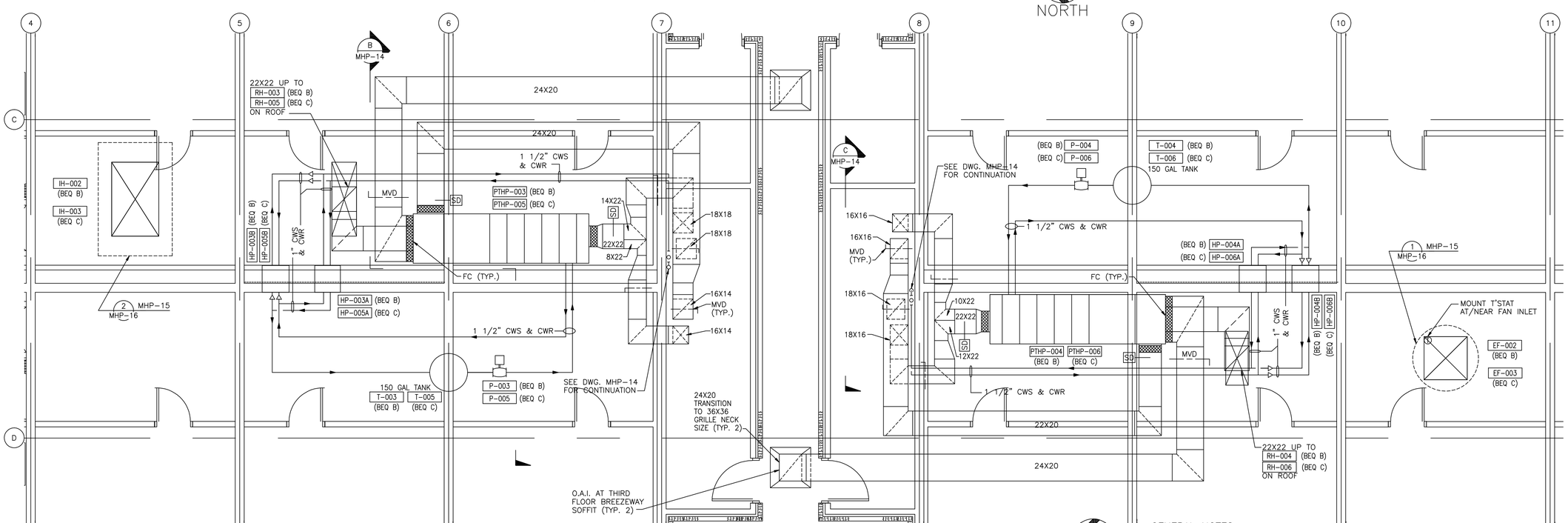

HVAC – BEQ B & C MECHANICAL ROOM PARTIAL ATTIC PLAN (60 UNITS)

1/4"=1'-0"

NORTH

GENERAL NOTES:

1. SEE DWG. MHP-14 FOR ADDITIONAL REFERENCE.
2. ALL ATTIC-MOUNTED EQUIPMENT SHALL BE PROVIDED WITH 2" DEEP MINIMUM HOUSEKEEPING PAD.

0 4 8 12

1/4"=1'-0"

J.A. JONES MANAGEMENT SERVICES, INC. OF THE CAROLINAS

LOCKWOOD GREENE Consulting•Design•Construction

DSGN	JPS/BMc	DR	CHK
		TSS	PST
SUPV	BMc	CH ENGR	RSS
SUBMITTED BY (FIRM MEMBER-TITLE)			DATE
			03-MAY-99

TECHNICAL BRANCH

FPE

DRAWING REVISIONS

Rev.	Description	Prep By	Date	Approvd.
0	FINAL DESIGN SUBMITTAL	JPS/BMc	03-MAY-99	BMc
1	ISSUE FOR RECORD	JPS	01JUN2001	RT

MCAS BEAUFORT, S.C.

BACHELOR ENLISTED QUARTERS – PHASE IV

BEQ A, B & C (90 & 60 UNITS)

HVAC – MECHANICAL ROOM PARTIAL ATTIC PLANS

APPROVED DATE

ETD FOR COMMANDER, NAVFAC

Naval Facilities Engineering Command

Southern Division

Charleston, South Carolina

RECORD DRAWING DATE 01-JUNE-2001

CODE I.D. NO. 80091

DRAWING SIZE: D

SPEC. NO.06-98-0690

CONSTRN. CONTR. NO. N62467-98-D-0690

NAVFAC DRAWING NO. 5364438

SHEET 6 OF 19

MHP-15

$$$$ USERNAME $$$$ $$$$ DATE&TIME $$$$ $$$$ DESIGN FILE NAME $$$$

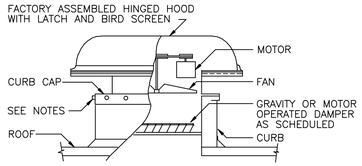

NOTES:

1. WHEN WOOD PLATE IS PROVIDED AROUND TOP OF CURB:
   A. SECURE HOOD TO WOOD PLATE WITH 1/4"ø X 1 1/2" LONG CADMIUM PLATED LAG BOLTS NOT OVER 12" O.C.
   B. EXTEND DUCT TO FULL HEIGHT OF CURB AND FASTEN HEM EDGE OF DUCT TO WOOD PLATE WITH SCREWS NOT OVER 6"O.C.
2. WHEN PREFAB METAL CURB IS USED, SECURE HOOD & DUCTWORK WITH SHEET METAL SCREWS AS REQUIRED FOR TIGHT JOINTS AND RIGID INSTALLATION.

ROOF EXHAUST FAN
DETAIL 1 MHP-13, MHP-15, MMP-22
NTS MHP-16

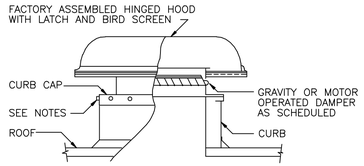

NOTES:

1. WHEN WOOD PLATE IS PROVIDED AROUND TOP OF CURB:
   A. SECURE HOOD TO WOOD PLATE WITH 1/4"ø X 1 1/2" LONG CADMIUM PLATED LAG BOLTS NOT OVER 12" O.C.
   B. EXTEND DUCT TO FULL HEIGHT OF CURB AND FASTEN HEM EDGE OF DUCT TO WOOD PLATE WITH SCREWS NOT OVER 6" O.C.
2. WHEN PREFAB METAL CURB IS USED, SECURE HOOD & DUCTWORK WITH SHEET METAL SCREWS AS REQUIRED FOR TIGHT JOINTS AND RIGID INSTALLATION.

INTAKE/RELIEF HOOD
DETAIL 2 MHP-13 MHP-15
NTS MHP-16

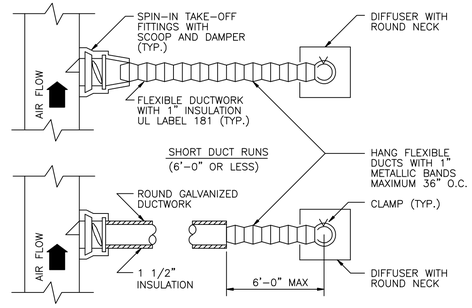

FLEXIBLE DUCTWORK DIFFUSER RUNOUT
DETAIL 3 MHP-13
NTS MHP-16

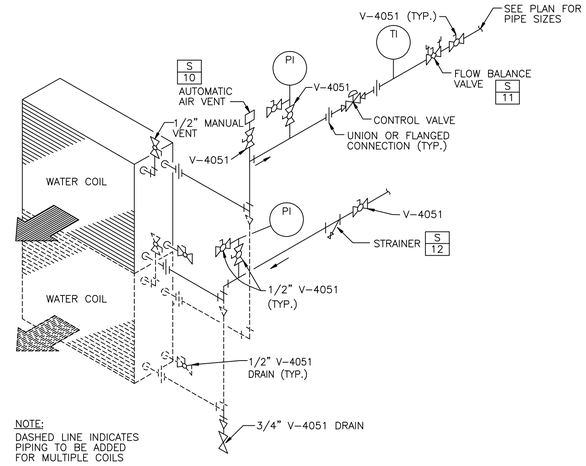

NOTE:
DASHED LINE INDICATES PIPING TO BE ADDED FOR MULTIPLE COILS

COOLING WATER COIL PIPING (TWO WAY)
DETAIL 4 MHP-13 MMP-20, MMP-21
NTS MHP-16

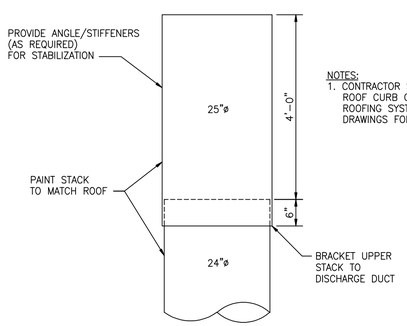

NOTES:
1. CONTRACTOR SHALL PROVIDE ROOF CURB COMPATIBLE WITH ROOFING SYSTEM (SEE ARCHITECTURAL DRAWINGS FOR SYSTEM COMPONENTS)

DUCT STACK
DETAIL 5 MHP-16
NTS MHP-16

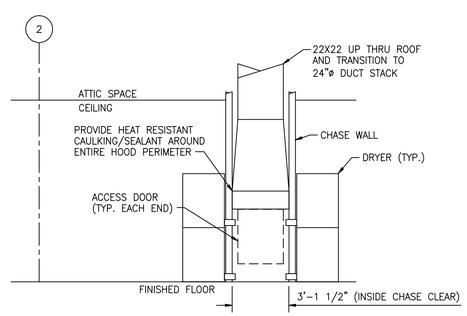

DRYER VENT CHASE (LOOKING EAST)
SECTION 1 MHP-13
1/4"=1'-0" MHP-16

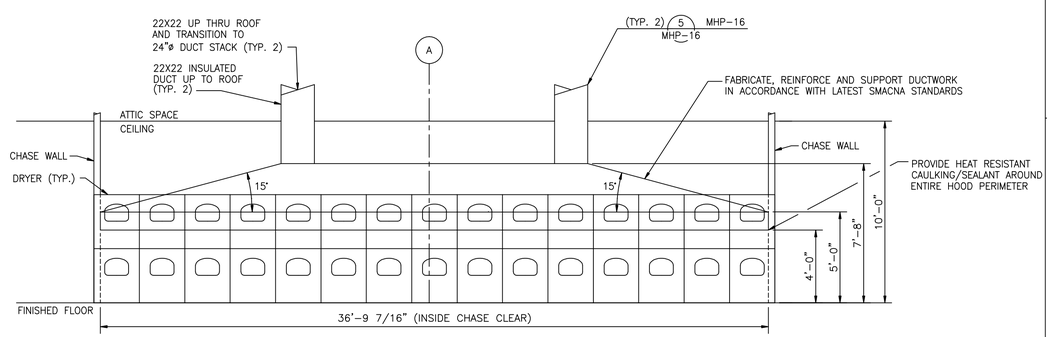

DRYER VENT CHASE (LOOKING SOUTH)
SECTION 2 MHP-13
1/4"=1'-0" MHP-16

0 4 8 12
1/4"=1'-0"

J.A. JONES MANAGEMENT SERVICES
J.A. JONES OF THE CAROLINAS
LOCKWOOD GREENE
Consulting • Design • Construction

DSGN	JPS/BMc	DR	TSS
CH ENGR	RSS	CHK	PST
SUPV	BMc	SUBMITTED BY (FIRM MEMBER-TITLE)	DATE 03-MAY-99
TECHNICAL BRANCH			
FPE			

DRAWING REVISIONS

Rev.	Description	Prep By	Date	Approvd.
0	FINAL DESIGN SUBMITTAL	JPS/BMc	03-MY-99	BMc
1	ISSUE FOR RECORD	JPS	01JUN2001	RT

MCAS BEAUFORT, S.C.
BACHELOR ENLISTED QUARTERS - PHASE IV
BEQ A, B, C & COMMUNITY CENTER
HVAC - TYPICAL ROOM PLAN, SECTIONS & DETAILS
APPROVED DATE
ETD FOR COMMANDER, NAVFAC

Naval Facilities Engineering Command
Southern Division
Charleston, South Carolina

RECORD DRAWING DATE 01-JUNE-2001
CODE I.D. NO. 80091
DRAWING SIZE: D
SPEC. NO.06-98-0690
CONSTRN. CONTR. NO. N62467-98-D-0690
NAVFAC DRAWING NO. 5364439
SHEET 7 OF 19
MHP-16

$$$$ USERNAME $$$$ $$$$ DATE&TIME $$$$ $$$$ DESIGN FILE NAME $$$$

WATER SOURCE HEAT PUMP UNIT SCHEDULE

EQUIPMENT NUMBER	AREA/UNIT SERVED	DRAWING NUMBER	DESCRIPTION	FAN S.A. CFM	FAN O.A. CFM	FAN E.A. CFM	FAN S.A. EXT. S.P. IN.	FAN S.A. TOTAL S.P. IN.	FAN E.A. EXT. S.P. IN.	FAN MIN. SUPPLY MOTOR HP	FAN MIN. E.A. MOTOR HP	VOLTS/PHASE/HZ (MCA)	FILTERS TYPE	FILTERS MAX. FACE VELOCITY FPM	COOLING ENT. AIR °F DB	COOLING ENT. AIR °F WB	COOLING LVG. AIR °F DB	COOLING LVG. AIR °F WB	COOLING MAX. FACE VELOCITY FPM	COOLING * GPM	COOLING EWT °F	COOLING △T °F	COOLING MBH SENS.	COOLING MBH TOTAL	HEATING ENT. AIR °F	HEATING MBH OUTPUT	HEATING HOT WATER * GPM	HEATING HOT WATER △T °F	MAX. WT. LB.	REMARKS (AS NOTED BELOW)
WSHP-001,015,031,045,061,075	BEQ "A" 1ST, 2ND & 3RD FLR.	MHP-11	WATER SOURCE HEAT PUMP	620	85	–	0.40	1.50	–	1/5	–	208/1/60	TA	500	74.0	61.7	55.3	54.8	500	3.2	75	10	12.5	12.6	66.5	8.8	3.2	10	180	1,2,4,5,6,8,9,10,11
WSHP-014,030,044,060,074,090	BEQ "A" 1ST, 2ND & 3RD FLR.	MHP-11	WATER SOURCE HEAT PUMP	545	85	–	0.40	1.50	–	1/5	–	208/1/60	TA	500	73.6	61.5	54.9	54.4	500	3.2	75	10	11.0	11.2	66.3	8.8	3.2	10	180	1,2,4,5,6,8,9,10,11
WSHP-007,022,037,052,067,082	BEQ "A" 1ST, 2ND & 3RD FLR.	MHP-11	WATER SOURCE HEAT PUMP	625	85	–	0.40	1.50	–	1/5	–	208/1/60	TA	500	74.0	61.9	55.5	55.0	500	3.2	75	10	12.5	12.7	66.5	8.8	3.2	10	180	1,2,4,5,6,8,9,10,11
WSHP-008,023,038,053,068,083	BEQ "A" 1ST, 2ND & 3RD FLR.	MHP-11	WATER SOURCE HEAT PUMP	540	85	–	0.40	1.50	–	1/5	–	208/1/60	TA	500	73.5	61.2	54.5	54.0	500	3.2	75	10	11.1	11.2	66.3	8.8	3.2	10	180	1,2,4,5,6,8,9,10,11
WSHP-002-006,016-021,032-036, 046-051,062-066,076-081	BEQ "A" 1ST, 2ND & 3RD FLR.	MHP-11	WATER SOURCE HEAT PUMP	615	85	–	0.40	1.50	–	1/5	–	208/1/60	TA	500	74.0	61.9	55.5	55.0	500	3.3	75	10	12.3	12.5	66.5	8.4	3.2	10	180	1,2,4,5,6,8,9,10,11
WSHP-009-013,024-029,039-043, 054-059,069-073,084-089	BEQ "A" 1ST, 2ND & 3RD FLR.	MHP-11	WATER SOURCE HEAT PUMP	535	85	–	0.40	1.50	–	1/5	–	208/1/60	TA	500	73.5	61.4	54.8	54.3	500	3.2	75	10	10.8	11.0	66.3	8.4	3.2	10	180	1,2,4,5,6,8,9,10,11
WSHP-091,101,111,121,131,141,151, 161,171,181,191,201	BEQ "B & C" 1ST,2ND,3RD FL.	MHP-12	WATER SOURCE HEAT PUMP	620	85	–	0.40	1.50	–	1/5	–	208/1/60	TA	500	74.0	61.9	55.6	55.1	500	3.2	75	10	12.3	12.5	66.3	8.8	3.2	10	180	1,2,4,5,6,8,9,10,11
WSHP-100,110,120,130,140,150,160, 170,180,190,200,210	BEQ "B & C" 1ST,2ND,3RD FL.	MHP-12	WATER SOURCE HEAT PUMP	545	85	–	0.40	1.50	–	1/5	–	208/1/60	TA	500	73.6	61.5	54.9	54.4	500	3.2	75	10	11.0	11.2	66.1	8.8	3.2	10	180	1,2,4,5,6,8,9,10,11
WSHP-095,105,115,125,135,145,155, 165,175,185,195,205	BEQ "B & C" 1ST,2ND,3RD FL.	MHP-12	WATER SOURCE HEAT PUMP	625	85	–	0.40	1.50	–	1/5	–	208/1/60	TA	500	74.0	61.9	55.6	55.1	500	3.2	75	10	12.4	12.6	66.4	8.8	3.2	10	180	1,2,4,5,6,8,9,10,11
WSHP-096,106,116,126,136,146,156, 166,176,186,196,206	BEQ "B & C" 1ST,2ND,3RD FL.	MHP-12	WATER SOURCE HEAT PUMP	540	85	–	0.40	1.50	–	1/5	–	208/1/60	TA	500	73.5	61.2	54.5	54.0	500	3.2	75	10	11.1	11.2	66.1	8.8	3.2	10	180	1,2,4,5,6,8,9,10,11
WSHP-092-094,102-104,112-114, 122-124,132-134,142-144,	BEQ "B & C" 1ST,2ND,3RD FL.	MHP-12	WATER SOURCE HEAT PUMP	615	85	–	0.40	1.50	–	1/5	–	208/1/60	TA	500	74.0	61.9	55.6	55.1	500	3.3	75	10	12.2	12.3	66.3	8.4	3.2	10	180	1,2,4,5,6,8,9,10,11
WSHP-152-154,162-164,172-174, 182-184,192-194,202-204	BEQ "B & C" 1ST,2ND,3RD FL.	MHP-12	WATER SOURCE HEAT PUMP	615	85	–	0.40	1.50	–	1/5	–	208/1/60	TA	500	74.0	61.9	55.6	55.1	500	3.3	75	10	12.2	12.3	66.3	8.4	3.2	10	180	1,2,4,5,6,8,9,10,11
WSHP-097-099,107-109,117-119, 127-129,137-139,147-149	BEQ "B & C" 1ST,2ND,3RD FL.	MHP-12	WATER SOURCE HEAT PUMP	535	85	–	0.40	1.50	–	1/5	–	208/1/60	TA	500	73.5	61.4	54.8	54.3	500	3.2	75	10	10.8	11.0	66.1	8.4	3.2	10	180	1,2,4,5,6,8,9,10,11
WSHP-157-159,167-169,177-179, 187-189,197-199,207-209	BEQ "B & C" 1ST,2ND,3RD FL.	MHP-12	WATER SOURCE HEAT PUMP	535	85	–	0.40	1.50	–	1/5	–	208/1/60	TA	500	73.5	61.4	54.8	54.3	500	3.2	75	10	10.8	11.0	66.1	8.4	3.2	10	180	1,2,4,5,6,8,9,10,11
WSHP-211	COMMUNITY CENTER – RECREATION	MHP-13	WATER SOURCE HEAT PUMP	4,000	840	–	1.00	2.00	–	1 1/2	–	208/3/60	TA	500	80.3	68.0	61.1	59.5	500	19.6	75	10	82.1	112.4	59.4	109.9	19.6	10	665	1,2,3,4,5,6,8,9,11
WSHP-212	COMMUNITY CENTER – LAUNDRY	MHP-13	WATER SOURCE HEAT PUMP	8,600	300	–	1.00	2.00	–	5	–	208/3/60	TA	500	77.6	61.5	54.4	51.9	500	73.0	75	10	221.3	236.3	66.6	56.4	73.0	10	1490	1,2,3,4,5,6,8,9,11
PTHP-001	BEQ "A"	MHP-15	HEAT PUMP/RECOVERY UNIT	4,975	4,975	4,555	1.50	2.50	1.50	5	5	208/3/60	TA	500	80.9	68.9	68.7	65.5	500	14.6	45	10	70.6	73.0	57.2	105.2	14.6	16.8	1620	1,2,3,4,5,7,8,9
PTHP-002	BEQ "A"	MHP-15	HEAT PUMP/RECOVERY UNIT	5,205	5,205	4,725	1.50	2.50	1.50	5	5	208/3/60	TA	500	81.1	69.1	68.4	65.1	500	14.6	45	10	72.6	73.0	56.8	105.2	14.6	16.8	1803	1,2,3,4,5,7,8,9
PTHP-003, PTHP-005	BEQ "B" & "C"	MHP-15	HEAT PUMP/RECOVERY UNIT	3,955	3,955	3,655	1.50	2.50	1.50	5	5	208/3/60	TA	500	81.3	69.4	66.8	64.0	500	14.6	45	10	63.3	73.7	56.2	105.2	14.6	16.8	1402	1,2,3,4,5,7,8,9
PTHP-004, PTHP-006	BEQ "B" & "C"	MHP-15	HEAT PUMP/RECOVERY UNIT	3,570	3,570	3,270	1.50	2.50	1.50	3	3	208/3/60	TA	500	81.5	69.6	66.2	63.7	500	14.6	45	10	60.3	73.0	55.7	105.2	14.6	16.8	1334	1,2,3,4,5,7,8,9
HP-001A, HP-001B	BEQ "A"-PTHP-001	MHP-15	WATER-TO-WATER WSHP	–	–	–	–	–	–	–	–	208/1/60 (50.1)	–	–	–	–	–	–	–	7.3	75	10	–	36.5	–	52.6	7.3	16.8	300	2,3,4,9,11
HP-002A, HP-002B	BEQ "A"-PTHP-002	MHP-15	WATER-TO-WATER WSHP	–	–	–	–	–	–	–	–	208/1/60 (50.1)	–	–	–	–	–	–	–	7.3	75	10	–	36.5	–	52.6	7.3	16.8	300	2,3,4,9,11
HP-003A, HP-003B	BEQ "B"-PTHP-003	MHP-15	WATER-TO-WATER WSHP	–	–	–	–	–	–	–	–	208/1/60 (50.1)	–	–	–	–	–	–	–	7.3	75	10	–	36.5	–	52.6	7.3	16.8	300	2,3,4,9,11
HP-004A, HP-004B	BEQ "B"-PTHP-004	MHP-15	WATER-TO-WATER WSHP	–	–	–	–	–	–	–	–	208/1/60 (50.1)	–	–	–	–	–	–	–	7.3	75	10	–	36.5	–	52.6	7.3	16.8	300	2,3,4,9,11
HP-005A, HP-005B	BEQ "C"-PTHP-005	MHP-15	WATER-TO-WATER WSHP	–	–	–	–	–	–	–	–	208/1/60 (50.1)	–	–	–	–	–	–	–	7.3	75	10	–	36.5	–	52.6	7.3	16.8	300	2,3,4,9,11
HP-006A, HP-006B	BEQ "C"-PTHP-006	MHP-15	WATER-TO-WATER WSHP	–	–	–	–	–	–	–	–	208/1/60 (50.1)	–	–	–	–	–	–	–	7.3	75	10	–	36.5	–	52.6	7.3	16.8	300	2,3,4,9,11

* GPM'S BASED ON MANUFACTURER'S DATA FOR HEAT REMOVAL DURING COOLING CYCLE.

1. EXTERNAL STATIC PRESSURE IS FROM AHU DISCHARGE TO RETURN AIR CONNECTION. VENDOR SHALL VERIFY TOTAL S.P. AND HP. ALLOW 0.8"W.G. FOR 30% FILTERS.
2. FACTORY MOUNTED AND WIRED DISCONNECT SWITCH.
3. PROVIDE MOTOR STARTER.
4. PROVIDE INTERNAL VIBRATION ISOLATION.
5. EXTENDED GREASE FITTINGS.
6. FILTER SECTION.
7. FILTER – MIXING BOX SECTION.
8. TEFC MOTOR.
9. MAXIMUM DBA AT 5'-0" FROM UNIT SHALL NOT EXCEED 80 dBA.
10. PROVIDE WITH FACTORY STARTER CONTROLS.
11. COOLING GPM IS CONDENSER WATER GPM.

AIR DISTRIBUTION DEVICE SCHEDULE

SYMBOL	MOUNTING TYPE	NECK SIZE (IN.)	PANEL SIZE (IN.)	SERVICE	THROW PATTERN	REMARKS (AS NOTED BELOW)
A	WALL MOUNT	18X10	20 1/2X12 1/2	SUPPLY	–	1,2,3
B	SURFACE MOUNT	12X12	14 1/2X14 1/2	RETURN	–	2,3,4
C	SURFACE MOUNT	6X6	8 1/2X8 1/2	EXHAUST	–	2,3,4
D	SURFACE MOUNT	8X8	10 1/2X10 1/2	EXHAUST	–	2,3,4
E	LAY-IN	15"ø	24X24	SUPPLY	4-WAY	2,3,5
F	LAY-IN	15"ø	24X24	SUPPLY	3-WAY	2,3,5
G	LAY-IN	48X48	50 1/2X50 1/2	RETURN	–	2,3,4
H	LAY-IN	8"ø	24X24	SUPPLY	4-WAY	2,3,5
I	LAY-IN	10"ø	24X24	SUPPLY	4-WAY	2,3,5
J	WALL MOUNT	6X6	8 1/2X8 1/2	SUPPLY	–	1,2,3
K	LAY-IN	34X34	36 1/2X 36 1/2	RETURN	–	2,3,4
L	LAY-IN	12X12	24X24	RETURN	–	2,3,4,6
M	DUCT MOUNT	6"ø	13 1/2"ø	SUPPLY	360°	2,3,7
N	WALL MOUNT	6X6	8 1/2X8 1/2	SUPPLY	–	2,3,8
P	DUCT MOUNT	6X6	8 1/2X8 1/2	EXHAUST	–	2,3,4
R	DUCT MOUNT	8X6	10 1/2X8 1/2	SUPPLY	–	2,3,8
S	WALL MOUNT	14X14	16 1/2X16 1/2	SUPPLY	–	2,3,8
T	DUCT MOUNT	6X6	8 1/2X8 1/2	SUPPLY	–	2,3,8
U	DUCT MOUNT	8X6	10 1/2X8 1/2	EXHAUST	–	2,3,4
V	DUCT MOUNT	14X14	16 1/2X16 1/2	EXHAUST	–	2,3,4
W	SOFFIT MOUNT	38X38	40 1/2X40 1/2	O.A. INTAKE	–	2,3,9
X	SOFFIT MOUNT	36X36	38 1/2X38 1/2	O.A. INTAKE	–	2,3,9

1. DOUBLE DEFLECTION, FRONT BLADE PARALLEL TO SHORT DIMENSION (3/4" BLADE SPACING).
2. WHITE FINISH.
3. ALL ALUMINUM CONSTRUCTION.
4. EGGCRATE GRILLE WITH 1/2"X1/2"X1/2" CORE.
5. CONCENTRIC 3-CONE DIFFUSER W/DAMPER (SQUARE).
6. PANEL MOUNTED.
7. CONCENTRIC 4-CONE DIFFUSER W/DAMPER (ROUND).
8. SINGLE DEFLECTION, FRONT BLADE PARALLEL TO LONG DIMENSION (1/2" BLADE SPACING).
9. SINGLE BLADE, 0° DEFLECTION (1/2" BLADE SPACING).

PUMP SCHEDULE

EQUIPMENT NUMBER	DESCRIPTION	DRAWING NUMBER	GPM	TOTAL HEAD FT.	NPSH AVAIL. FT.	SP. GR	TEMP. °F	MIN. HP	ELECTRICAL VOLTS/PHASE/HZ	RPM	TYPE	REMARKS (AS NOTED BELOW)
P-001	ENERGY RECOVERY LOOP (PTHP-001)	MHP-15	36	45	25	1.0	80	1 1/2	208/3/60	1770	IN-LINE CENTRIFUGAL	1
P-002	ENERGY RECOVERY LOOP (PTHP-002)	MHP-15	36	45	25	1.0	80	1 1/2	208/3/60	1770	IN-LINE CENTRIFUGAL	1
P-003	ENERGY RECOVERY LOOP (PTHP-003)	MHP-15	28	45	25	1.0	80	1	208/3/60	1770	IN-LINE CENTRIFUGAL	1
P-004	ENERGY RECOVERY LOOP (PTHP-004)	MHP-15	28	45	25	1.0	80	1	208/3/60	1770	IN-LINE CENTRIFUGAL	1
P-005	ENERGY RECOVERY LOOP (PTHP-005)	MHP-15	28	45	25	1.0	80	1	208/3/60	1770	IN-LINE CENTRIFUGAL	1
P-006	ENERGY RECOVERY LOOP (PTHP-006)	MHP-15	28	45	25	1.0	80	1	208/3/60	1770	IN-LINE CENTRIFUGAL	1
P-007	POTABLE WATER RECIRCULATION	MMP-22	880	50	130	1.0	60	15	460/3/60	1770	HORIZONTALLY SPILT CASE	1
P-008	POTABLE WATER RECIRCULATION	MMP-22	880	120	100	1.0	75	40	460/3/60	1770	HORIZONTALLY SPILT CASE	1
P-009	POTABLE WATER RECIRCULATION	MMP-22	880	50	130	1.0	60	15	460/3/60	1770	HORIZONTALLY SPILT CASE	1
P-010	POTABLE WATER RECIRCULATION	MMP-22	880	120	100	1.0	75	40	460/3/60	1770	HORIZONTALLY SPILT CASE	1

1. PROVIDE MOTOR STARTER.

FAN SCHEDULE

EQUIPMENT NUMBER	AREA SERVED	DRAWING NUMBER	CFM	EXT. S.P. IN.	MIN. BHP	MIN. MOTOR HP	RPM	DRIVE	FAN TYPE	WHEEL TYPE & DIAMETER – IN.	ROOF/WALL OPENING – IN.	MAX. RELATIVE SOUND dBA	REMARKS (AS NOTED BELOW)
EF-001	BEQ "A"-ATTIC EQUIPMENT ROOM	MHP-14	10,000	0.25	1.46	1-1/2	465	BELT	ROOF MOUNTED CENTRIFUGAL	---	38 1/2 X 38 1/2	40	1,2,3,4,5,6,7,9,10,11
EF-002	BEQ "B"-ATTIC EQUIPMENT ROOM	MHP-15	9,200	0.25	1.25	1-1/2	440	BELT	ROOF MOUNTED CENTRIFUGAL	---	38 1/2 X 38 1/2	40	1,2,3,4,5,6,7,9,10,11
EF-003	BEQ "C"-ATTIC EQUIPMENT ROOM	MHP-15	9,200	0.25	1.25	1-1/2	440	BELT	ROOF MOUNTED CENTRIFUGAL	---	38 1/2 X 38 1/2	40	1,2,3,4,5,6,7,9,10,11
EF-004	COMMUNITY CENTER-TOILETS/JANITOR	MHP-13	450	0.50	0.085	1/4	1,320	BELT	ROOF MOUNTED CENTRIFUGAL	---	12 1/2 X 12 1/2	40	1,2,4,5,6,8,9,10,11
EF-005	NOT USED												
EF-006	UTILITY BUILDING	MHP-22	4,900	0.125	0.38	1/2	425	BELT	ROOF MOUNTED CENTRIFUGAL	---	32 1/2 X 32 1/2	40	1,2,3,4,5,6,9,10,11,12

1. BIRDSCREEN.
2. FACTORY MOUNTED AND WIRED DISCONNECT SWITCH.
3. MOTOR STARTER.
4. MANUFACTURER'S ROOF CURB COMPATIBLE WITH ROOFING SYSTEM (SEE ARCHITECTURAL DRAWINGS FOR SYSTEM COMPONENTS).
5. COUNTERBALANCED BACKDRAFT DAMPER.
6. VIBRATION ISOLATION.
7. 208V/3 PHASE/60Hz.
8. 115V/1 PHASE/60Hz.
9. TEFC MOTOR.
10. WEATHER COVER.
11. EXTENDED GREASE FITTINGS.
12. 460V/3 PHASE/60Hz.

UNIT HEATER SCHEDULE

EQUIPMENT NUMBER	AREA SERVED	DRAWING NUMBER	DESCRIPTION	CFM	MHP	MIN. HEATING MBH	ELECTRICAL KW	ELECTRICAL VOLTS/PHASE/HZ	MTG. HT. FT.	REMARKS (AS NOTED BELOW)
UH-001	UTILITY BUILDING	MMP-22	ELECTRIC UNIT HEATER	530	25	8,040	5	460/3/60	8'-0"	1,2,3

1. HORIZONTAL DELIVERY TYPE.
2. 120 VOLT THERMOSTAT (UNIT MOUNTED).
3. 60°F ENTERING AIR TEMPERATURE.

INTAKE & RELIEF HOOD SCHEDULE

EQUIPMENT NUMBER	AREA/UNIT SERVED	DRAWING NUMBER	DESCRIPTION	CFM	THROAT AREA SQ. FT.	ROOF OPENING IN.	THROAT TO PERIMETER RATIO	MAX. AIR P.D. IN.*	REMARKS (AS NOTED BELOW)
IH-001	BEQ "A"-ATTIC EQUIP. ROOM	MHP-15	VENTILATION INTAKE HOOD	10,000	18.18	42X66	0.35	0.15	1,2,3,4
IH-002	BEQ "B"-ATTIC EQUIP. ROOM	MHP-15	VENTILATION INTAKE HOOD	9,200	18.18	42X66	0.35	0.15	1,2,3,4
IH-003	BEQ "C"-ATTIC EQUIP. ROOM	MHP-15	VENTILATION INTAKE HOOD	9,200	18.18	42X66	0.35	0.15	1,2,3,4
IH-004	COMMUNITY CENTER-WSHP-211	MHP-13	WSHP-211 O.A. INTAKE HOOD	840	1.67	12X20	0.25	0.10	1,2,3,4
IH-005	COMMUNITY CENTER-WSHP-212	MHP-13	WSHP-212 O.A. INTAKE HOOD	300	1.67	12X20	0.25	0.10	1,2,3,4
RH-001	BEQ "A"-PTHP-001	MHP-14, MHP-15	PTHP-001 RELIEF HOOD	4,555	9.17	20X66	0.35	0.10	1,2,4
RH-002	BEQ "A"-PTHP-002	MHP-14, MHP-15	PTHP-002 RELIEF HOOD	4,725	9.17	20X66	0.35	0.10	1,2,4
RH-003	BEQ "B"-PTHP-003	MHP-14, MHP-15	PTHP-003 RELIEF HOOD	3,655	7.33	16X66	0.35	0.10	1,2,4
RH-004	BEQ "B"-PTHP-004	MHP-14, MHP-15	PTHP-004 RELIEF HOOD	3,270	6.67	20X48	0.36	0.10	1,2,4
RH-005	BEQ "C"-PTHP-005	MHP-14, MHP-15	PTHP-005 RELIEF HOOD	3,655	7.33	16X66	0.35	0.10	1,2,4
RH-006	BEQ "C"-PTHP-006	MHP-14, MHP-15	PTHP-006 RELIEF HOOD	3,270	6.67	20X48	0.36	0.10	1,2,4

* INCLUDES BACKDRAFT DAMPER (IF APPLICABLE).

1. MANUFACTURER'S ROOF CURB COMPATIBLE WITH ROOFING SYSTEM (SEE ARCHITECTURAL DRAWINGS FOR SYSTEM COMPONENTS).
2. BIRDSCREEN.
3. COUNTERBALANCED BACKDRAFT DAMPER.
4. ALUMINUM CONSTRUCTION.

J.A. JONES DISTRICT ENGINEERS / J.A. JONES OF THE CAROLINAS
LOCKWOOD GREENE Consulting • Design • Construction

DSGN JPS/BMc	DR TSS	CHK PST	
SUPV BMc	CH ENGR RSS		
SUBMITTED BY (FIRM MEMBER-TITLE) Roy Smith, VP			DATE 03-MAY-99

DRAWING REVISIONS

Rev.	Description	Prep. By	Date	Approvd.
0	FINAL DESIGN SUBMITTAL	JPS/BMc	03-MAY-99	BMc
1	MISCELLANEOUS CHANGES	BMc	05-MAY-99	
2	MISCELLANEOUS CHANGES	JPS	26AUG99	
3	ISSUE FOR RECORD	JPS	01JUNE01	RT

TECHNICAL BRANCH
FPE

BEAUFORT, S.C.

BACHELOR ENLISTED QUARTERS – PHASE IV

BEQ A, B, C & COMMUNITY CENTER
HVAC – SCHEDULES

MCAS

APPROVED

DATE

ETD FOR COMMANDER, NAVFAC

Naval Facilities Engineering Command
Southern Division
Charleston, South Carolina

RECORD DRAWING DATE 01-JUNE-2001
CODE I.D. NO. 80091
DRAWING SIZE: D
SPEC. NO.06-98-0690
CONSTRN. CONTR. NO. N62467-98-D-0690
NAVFAC DRAWING NO. 5364440
SHEET 8 OF 19

MHP-17

$$$$ USERNAME $$$$ $$$$ DATE&TIME $$$$ $$$$ DESIGN FILE NAME $$$$

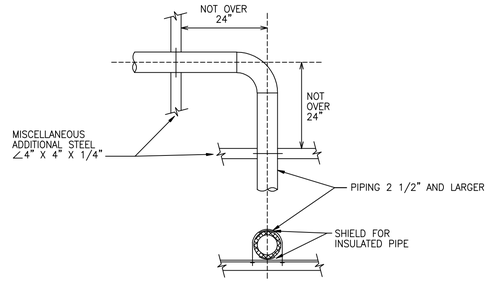

SEISMIC RESTRAINT/SWAY BRACE

USE WHEN OTHER TRANSVERSE AND LONGITUDINAL BRACES ARE NOT POSSIBLE.

DETAIL 1 MHP-18
NTS

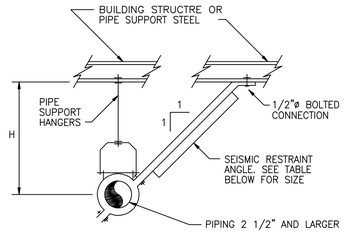

ANGLE SIZE TABLE	
H	ANGLE SIZE
2'-0" TO 5'-0"	∠ 2 1/2" X 2 1/4" X 1/4"
5'-1" TO 8'-0"	∠ 3 1/2" X 3 1/4" X 5/16"
8'-1" TO 11'-6"	∠ 3 1/2" X 3 1/4" X 1/4"

SEISMIC PIPE RESTRAINT

NOTE:
PLACE SEISMIC RESTRAINT ANGLE ONLY AT PIPE SUPPORT HANGERS.

DETAIL 2 MHP-18
NTS

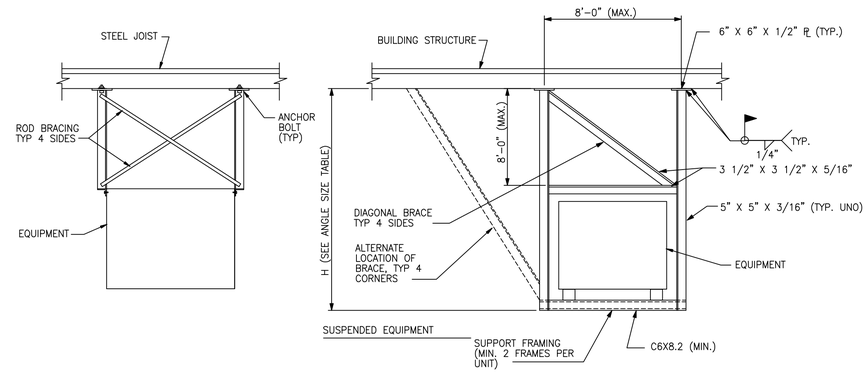

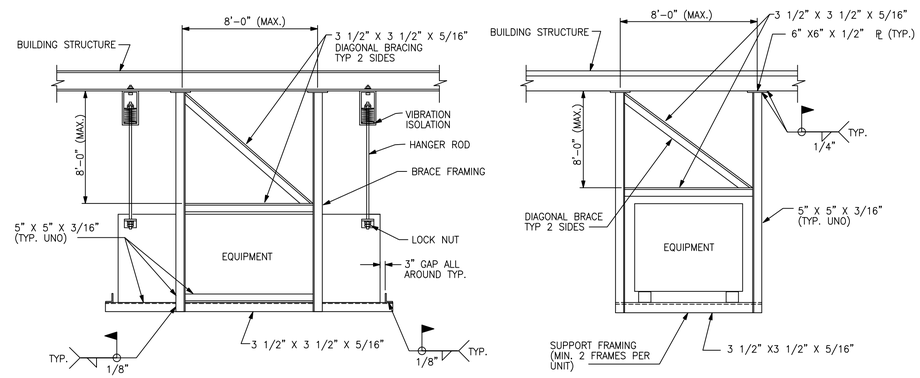

TYPICAL SEISMIC RESTRAINT AND SUPPORTS FOR EQUIPMENT

DETAIL 3 MHP-18
NTS

ANGLE SIZE TABLE	
H	ANGLE SIZE
2'-0" TO 5'-0"	∠2 1/2" X 2 1/4" X 1/4"
5'-1" TO 8'-0"	∠3 1/2" X 3 1/4" X 5/16"
8'-1" TO 11'-6"	∠3 1/2" X 3 1/4" X 1/4"

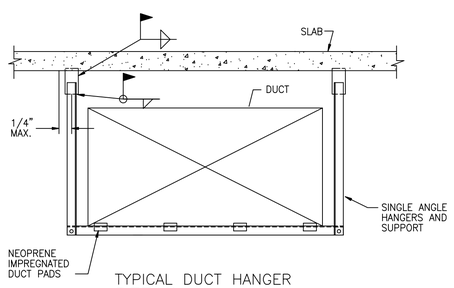

TYPICAL DUCT HANGER

DETAIL 4 MHP-18
NTS

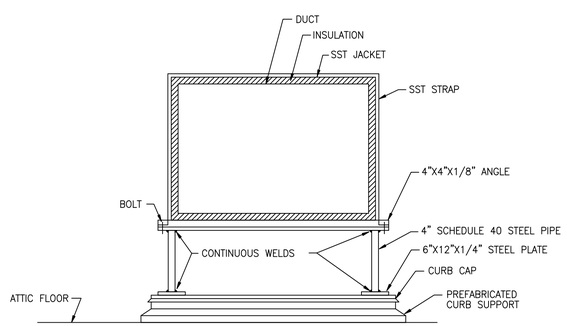

DUCT SUPPORT IN ATTIC

DETAIL 5 MHP-18
NTS

J.A. JONES MANAGEMENT SERVICES
J.A. JONES OF THE CAROLINAS
LOCKWOOD GREENE
Consulting•Design•Construction

DSGN	BMc	DR	TSS	CHK	PST
SUPV	BMc	CH ENGR	RSS		

SUBMITTED BY (FIRM MEMBER--TITLE) Kay Smith VP DATE 03-MAY-96

TECHNICAL BRANCH

FPE

DRAWING REVISIONS

Rev.	Description	Prep By	Date	Approvd.
0	FINAL DESIGN SUBMITTAL	JPS/BMc	03-MY-96	BMc
1	ISSUE FOR RECORD	JPS	01JUN2001	RT

MCAS BEAUFORT, S.C.

BACHELOR ENLISTED QUARTERS - PHASE IV

HVAC/MECHANICAL/PLUMBING/FIRE PROTECTION

SEISMIC DETAILS

DATE APPROVED

ETD FOR COMMANDER, NAVFAC

Naval Facilities Engineering Command
Southern Division
Charleston, South Carolina

RECORD DRAWING DATE 01-JUNE-2001

CODE I.D. NO. 80091

DRAWING SIZE: D

SPEC. NO.06-98-0690

CONSTRN. CONTR. NO. N62467-98-D-0690

NAVFAC DRAWING NO. 5364441

SHEET 9 OF 19

MHP-18

$$$$ USERNAME $$$$ $$$$ DATE&TIME $$$$ $$$$ DESIGN FILE NAME $$$$

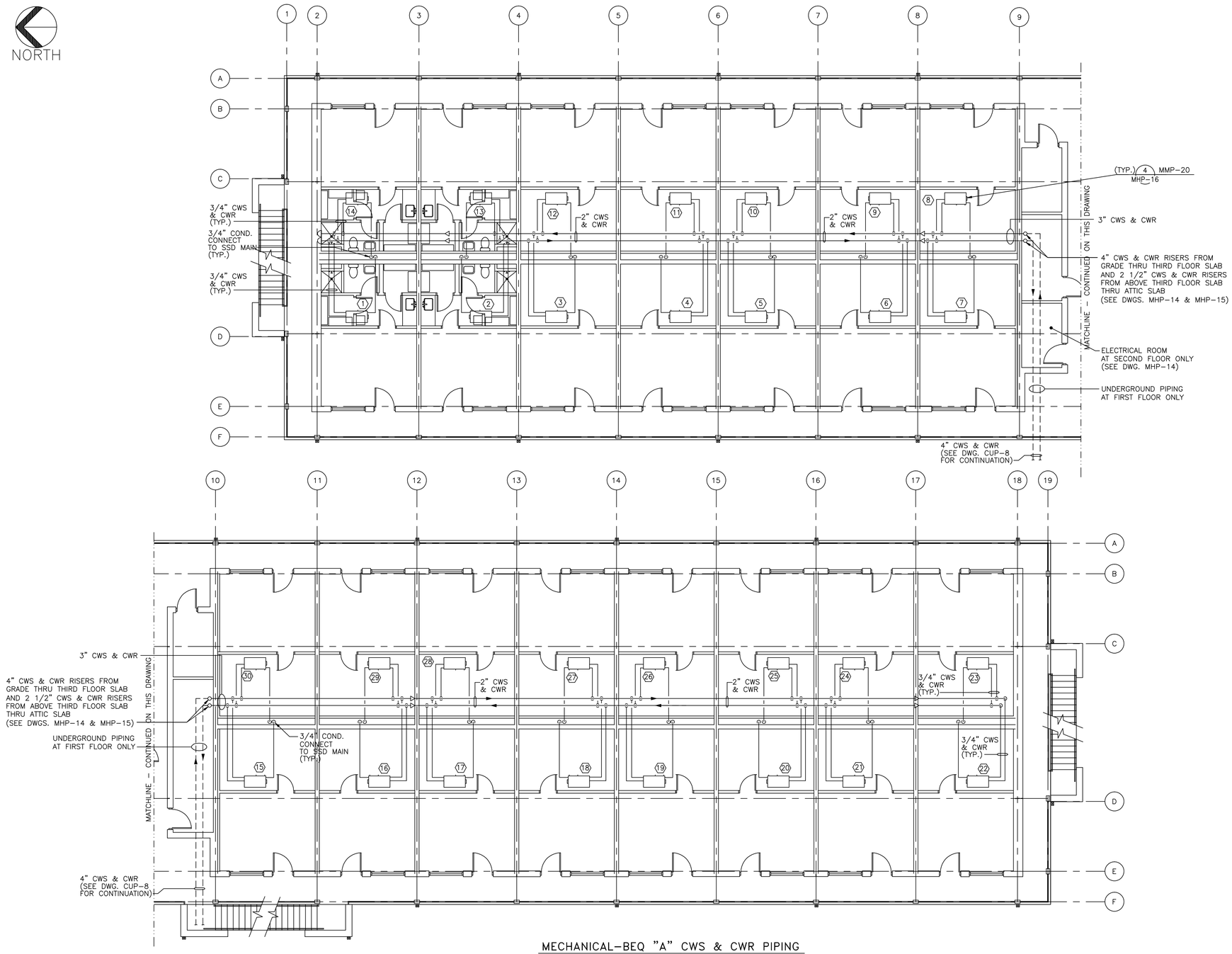

MECHANICAL-BEQ "A" CWS & CWR PIPING

1/8"=1'-0"

WATER SOURCE HEAT PUMP			
REFERENCE NUMBER	BEQ A EQUIP. NO'S		
	1st FLOOR	2nd FLOOR	3rd FLOOR
1	WSHP-001	WSHP-031	WSHP-061
2	WSHP-002	WSHP-032	WSHP-062
3	WSHP-003	WSHP-033	WSHP-063
4	WSHP-004	WSHP-034	WSHP-064
5	WSHP-005	WSHP-035	WSHP-065
6	WSHP-006	WSHP-036	WSHP-066
7	WSHP-007	WSHP-037	WSHP-067
8	WSHP-008	WSHP-038	WSHP-068
9	WSHP-009	WSHP-039	WSHP-069
10	WSHP-010	WSHP-040	WSHP-070
11	WSHP-011	WSHP-041	WSHP-071
12	WSHP-012	WSHP-042	WSHP-072
13	WSHP-013	WSHP-043	WSHP-073
14	WSHP-014	WSHP-044	WSHP-074
15	WSHP-015	WSHP-045	WSHP-075
16	WSHP-016	WSHP-046	WSHP-076
17	WSHP-017	WSHP-047	WSHP-077
18	WSHP-018	WSHP-048	WSHP-078
19	WSHP-019	WSHP-049	WSHP-079
20	WSHP-020	WSHP-050	WSHP-080
21	WSHP-021	WSHP-051	WSHP-081
22	WSHP-022	WSHP-052	WSHP-082
23	WSHP-023	WSHP-053	WSHP-083
24	WSHP-024	WSHP-054	WSHP-084
25	WSHP-025	WSHP-055	WSHP-085
26	WSHP-026	WSHP-056	WSHP-086
27	WSHP-027	WSHP-057	WSHP-087
28	WSHP-028	WSHP-058	WSHP-088
29	WSHP-029	WSHP-059	WSHP-089
30	WSHP-030	WSHP-060	WSHP-090

GENERAL NOTES:

1. CONTRACTOR SHALL FIELD ROUTE WSHP CONDENSATE DRAIN LINE TO PIPING CHASE (PROVIDE P-TRAP).

0 4 8 16 24

1/8"=1'-0"

J.A. JONES MANAGEMENT SERVICES, INC. OF THE CAROLINAS

LOCKWOOD GREENE Consulting•Design•Construction

DSGN	PST	DR	TSS	CHK	BMc
SUPV	BMc	CH ENGR	RSS		

SUBMITTED BY (FIRM MEMBER-TITLE) Greg Smith VP DATE 03-MAY-96

TECHNICAL BRANCH

FPE

DRAWING REVISIONS

Rev.	Description	Prep By	Date	Approvd.
0	FINAL DESIGN SUBMITTAL	PST	03-MAY-96	BMc
1	ISSUE FOR RECORD	JPS	01-JUNE-01	RT

MCAS BEAUFORT, S.C.

BACHELOR ENLISTED QUARTERS - PHASE IV

BEQ A (90 UNITS)

MECHANICAL PIPING - TYPICAL FLOOR PLAN

APPROVED DATE

Naval Facilities Engineering Command

Southern Division

Charleston, South Carolina

ETD FOR COMMANDER, NAVFAC

RECORD DRAWING DATE 01-JUNE-2001

CODE I.D. NO. 80091

DRAWING SIZE: D

SPEC. NO.06-98-0690

CONSTRN. CONTR. NO. N62467-98-D-0690

NAVFAC DRAWING NO. 5364442

SHEET 10 OF 19

MMP-20

$$$$ USERNAME $$$$ $$$$ DATE&TIME $$$$ $$$$ DESIGN FILE NAME $$$$

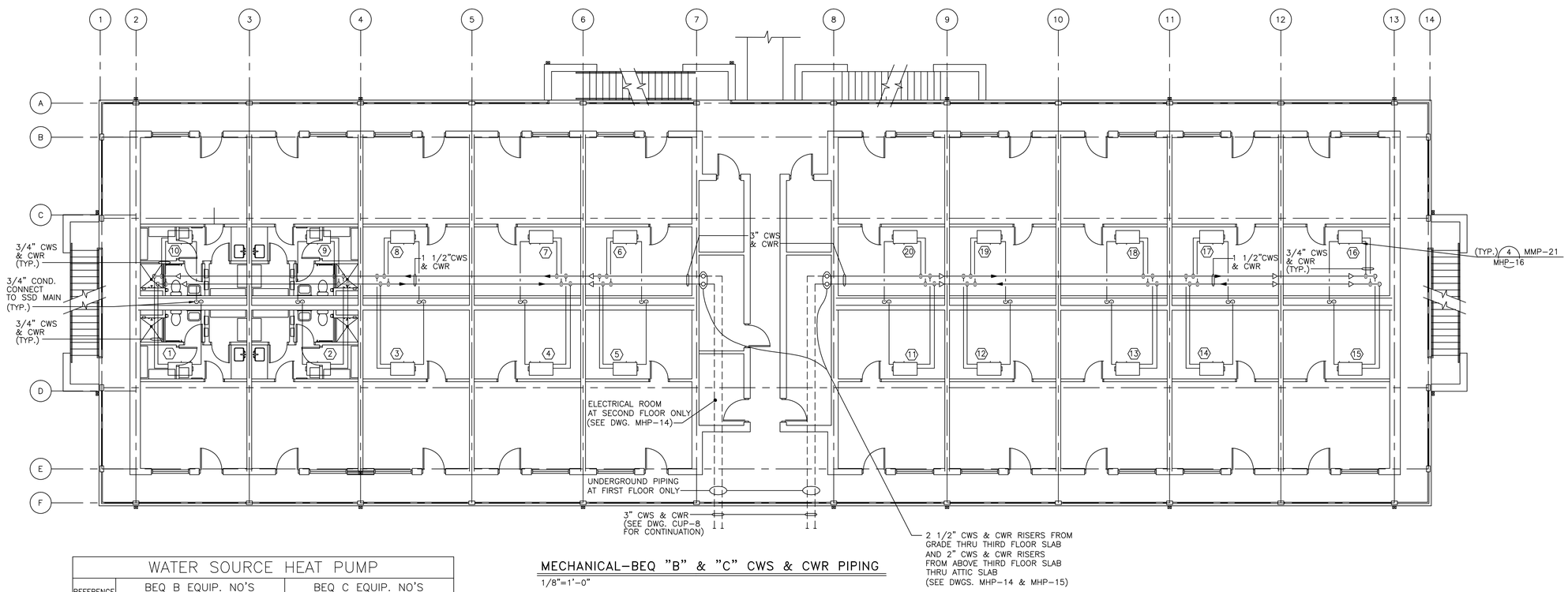

MECHANICAL–BEQ "B" & "C" CWS & CWR PIPING

1/8"=1'-0"

WATER SOURCE HEAT PUMP						
REFERENCE NUMBER	BEQ B EQUIP. NO'S			BEQ C EQUIP. NO'S		
	1st FLOOR	2nd FLOOR	3rd FLOOR	1st FLOOR	2nd FLOOR	3rd FLOOR
1	WSHP-091	WSHP-111	WSHP-131	WSHP-151	WSHP-171	WSHP-191
2	WSHP-092	WSHP-112	WSHP-132	WSHP-152	WSHP-172	WSHP-192
3	WSHP-093	WSHP-113	WSHP-133	WSHP-153	WSHP-173	WSHP-193
4	WSHP-094	WSHP-114	WSHP-134	WSHP-154	WSHP-174	WSHP-194
5	WSHP-095	WSHP-115	WSHP-135	WSHP-155	WSHP-175	WSHP-195
6	WSHP-096	WSHP-116	WSHP-136	WSHP-156	WSHP-176	WSHP-196
7	WSHP-097	WSHP-117	WSHP-137	WSHP-157	WSHP-177	WSHP-197
8	WSHP-098	WSHP-118	WSHP-138	WSHP-158	WSHP-178	WSHP-198
9	WSHP-099	WSHP-119	WSHP-139	WSHP-159	WSHP-179	WSHP-199
10	WSHP-100	WSHP-120	WSHP-140	WSHP-160	WSHP-180	WSHP-200
11	WSHP-101	WSHP-121	WSHP-141	WSHP-161	WSHP-181	WSHP-201
12	WSHP-102	WSHP-122	WSHP-142	WSHP-162	WSHP-182	WSHP-202
13	WSHP-103	WSHP-123	WSHP-143	WSHP-163	WSHP-183	WSHP-203
14	WSHP-104	WSHP-124	WSHP-144	WSHP-164	WSHP-184	WSHP-204
15	WSHP-105	WSHP-125	WSHP-145	WSHP-165	WSHP-185	WSHP-205
16	WSHP-106	WSHP-126	WSHP-146	WSHP-166	WSHP-186	WSHP-206
17	WSHP-107	WSHP-127	WSHP-147	WSHP-167	WSHP-187	WSHP-207
18	WSHP-108	WSHP-128	WSHP-148	WSHP-168	WSHP-188	WSHP-208
19	WSHP-109	WSHP-129	WSHP-149	WSHP-169	WSHP-189	WSHP-209
20	WSHP-110	WSHP-130	WSHP-150	WSHP-170	WSHP-190	WSHP-210

GENERAL NOTES:

1. CONTRACTOR SHALL FIELD ROUTE WSHP CONDENSATE DRAIN LINE TO PIPING CHASE (PROVIDE P–TRAP).

0 4 8 16 24

1/8"=1'-0"

J.A. JONES MANAGEMENT SERVICES, INC. OF THE CAROLINAS

LOCKWOOD GREENE Consulting•Design•Construction

DSGN PST	DR TSS	CHK BMc	
SUPV BMc	CH ENGR RSS		
SUBMITTED BY (FIRM MEMBER–TITLE) Greg Smith V.P.			DATE 03–MAY–99
TECHNICAL BRANCH			
FPE			

DRAWING REVISIONS

Rev.	Description	Prep By	Date	Approvd.
0	FINAL DESIGN SUBMITTAL	PST	03-MY-99	BMc
1	ISSUE FOR RECORD	JPS	01-JUNE01	RT

MCAS BEAUFORT, S.C.

BACHELOR ENLISTED QUARTERS – PHASE IV

BEQ B & C (60 UNITS)

MECHANICAL PIPING – TYPICAL FLOOR PLAN

APPROVED

DATE ED FOR COMMANDER, NAVFAC

Naval Facilities Engineering Command

Southern Division

Charleston, South Carolina

RECORD DRAWING DATE 01–JUNE–2001

CODE I.D. NO. 80091

DRAWING SIZE: D

SPEC. NO.06–98–0690

CONSTRN. CONTR. NO. N62467–98–D–0690

NAVFAC DRAWING NO. 5364443

SHEET 11 OF 19

MMP–21

$$$$ USERNAME $$$$ $$$$ DATE&TIME $$$$ $$$$ DESIGN FILE NAME $$$$

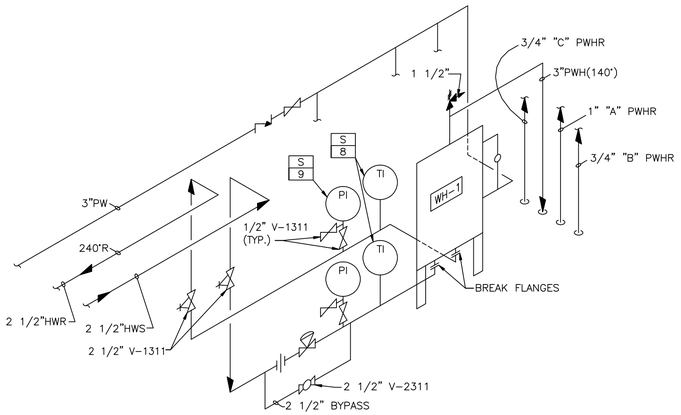

WATER HEATER DETAIL (1 / MMP-22) NTS MMP-22

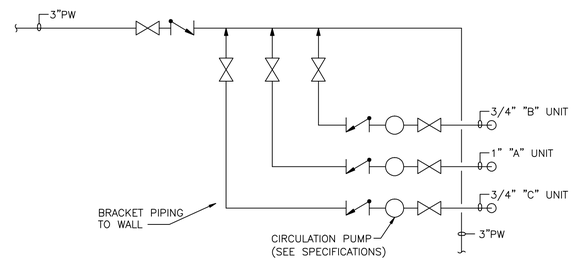

CIRCULATION PUMP DETAIL (2 / MMP-22) NTS MMP-22

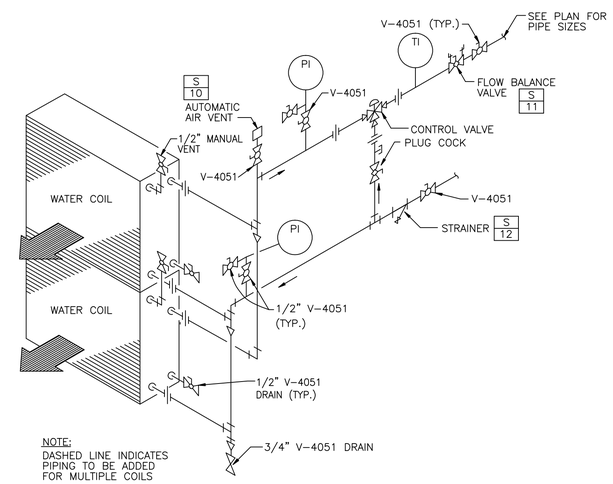

NOTE:
DASHED LINE INDICATES PIPING TO BE ADDED FOR MULTIPLE COILS

COOLING WATER COIL PIPING (3-WAY) DETAIL (5 / MHP-15) NTS MMP-22

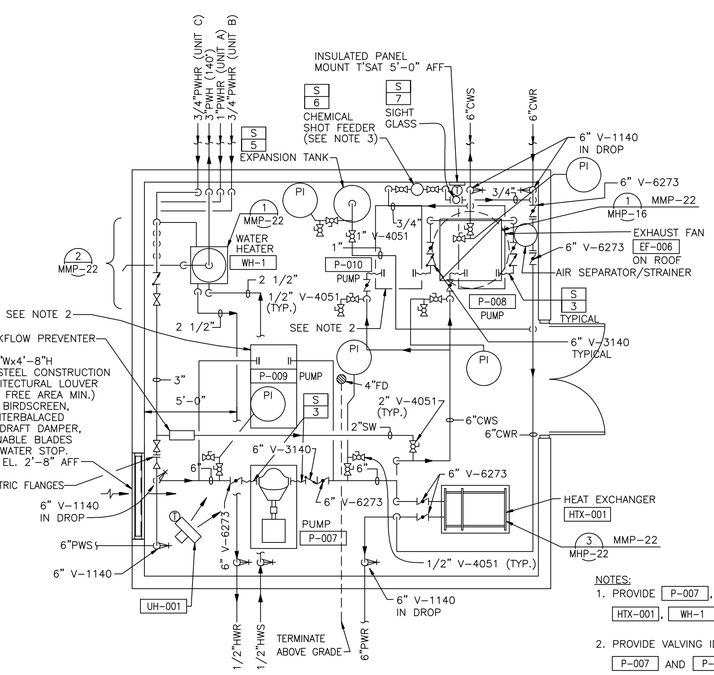

NOTES:
1. PROVIDE P-007, P-008, P-009, P-010, HTX-001, WH-1 WITH MINIMUM 4" HOUSEKEEPING PAD.
2. PROVIDE VALVING IDENTICAL TO PUMPS P-007 AND P-008.
3. PROVIDE SPILL PALLET, SPILL TRAY OR CURBED AREA (FOR CHEMICAL SHOT FEEDER) WITH A CONTAINMENT CAPACITY OF 6 GALLONS.

NORTH

MECHANICAL PIPING – UTILITY BUILDING
1/4"=1'-0"

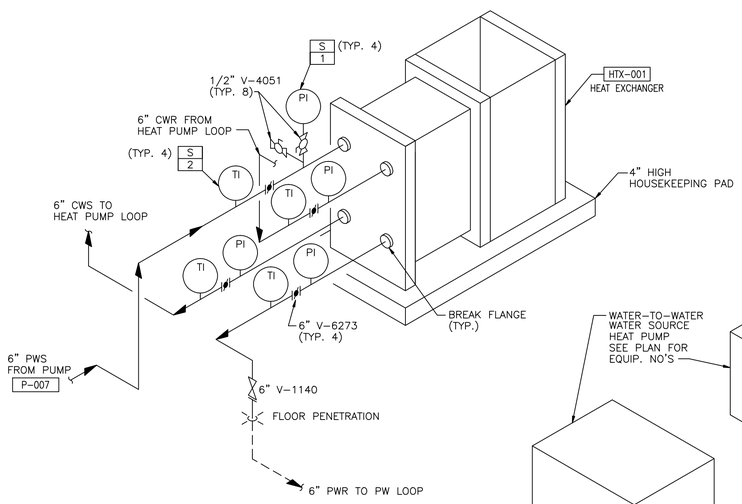

HEAT EXCHANGER HOOK UP DETAIL (3 / MMP-22) NTS MMP-22

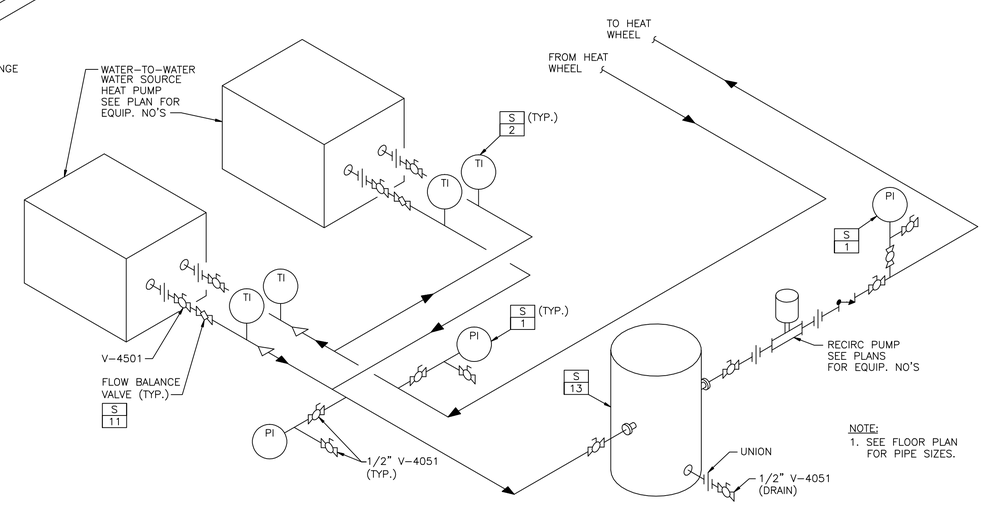

NOTE:
1. SEE FLOOR PLAN FOR PIPE SIZES.

WATER-TO-WATER WSHP HOOK UP DETAIL (4 / MHP-15) NTS MMP-22

0 4 8 12
1/4"=1'-0"

J.A. JONES MANAGEMENT SERVICES, INC. — J.A. JONES OF THE CAROLINAS — LOCKWOOD GREENE Consulting Design Construction

DSGN	PST	DR	TSS
SUPV	RMc	CHK	BMc
SUBMITTED BY (FIRM MEMBER-TITLE):		CH ENGR	RSS
TECHNICAL BRANCH		DATE	03-MAY-99
FPE			

DRAWING REVISIONS

Rev.	Description	Prep By	Date	Apprvd.
0	FINAL DESIGN SUBMITTAL	PST	02-MAY-99	BMc
1	ISSUE FOR RECORD	JPS	01JUN101	RT

MCAS BEAUFORT, S.C.
BACHELOR ENLISTED QUARTERS – PHASE IV
UTILITY BUILDING
MECHANICAL PIPING – FLOOR PLAN, SECTIONS & DETAILS
DETAILS, & SCHEDULES
APPROVED DATE EFD

Naval Facilities Engineering Command
Southern Division
Charleston, South Carolina

RECORD DRAWING DATE	01-JUNEV-2001
CODE I.D. NO.	80091
DRAWING SIZE:	D
SPEC. NO.	06-98-0690
CONSTRN. CONTR. NO.	N62467-98-D-0690
NAVFAC DRAWING NO.	5364444
SHEET 12 OF 19	
MMP-22	

EFD FOR COMMANDER, NAVFAC

$$$$ USERNAME $$$$ $$$$ DATE&TIME $$$$ $$$$ DESIGN FILE NAME $$$$

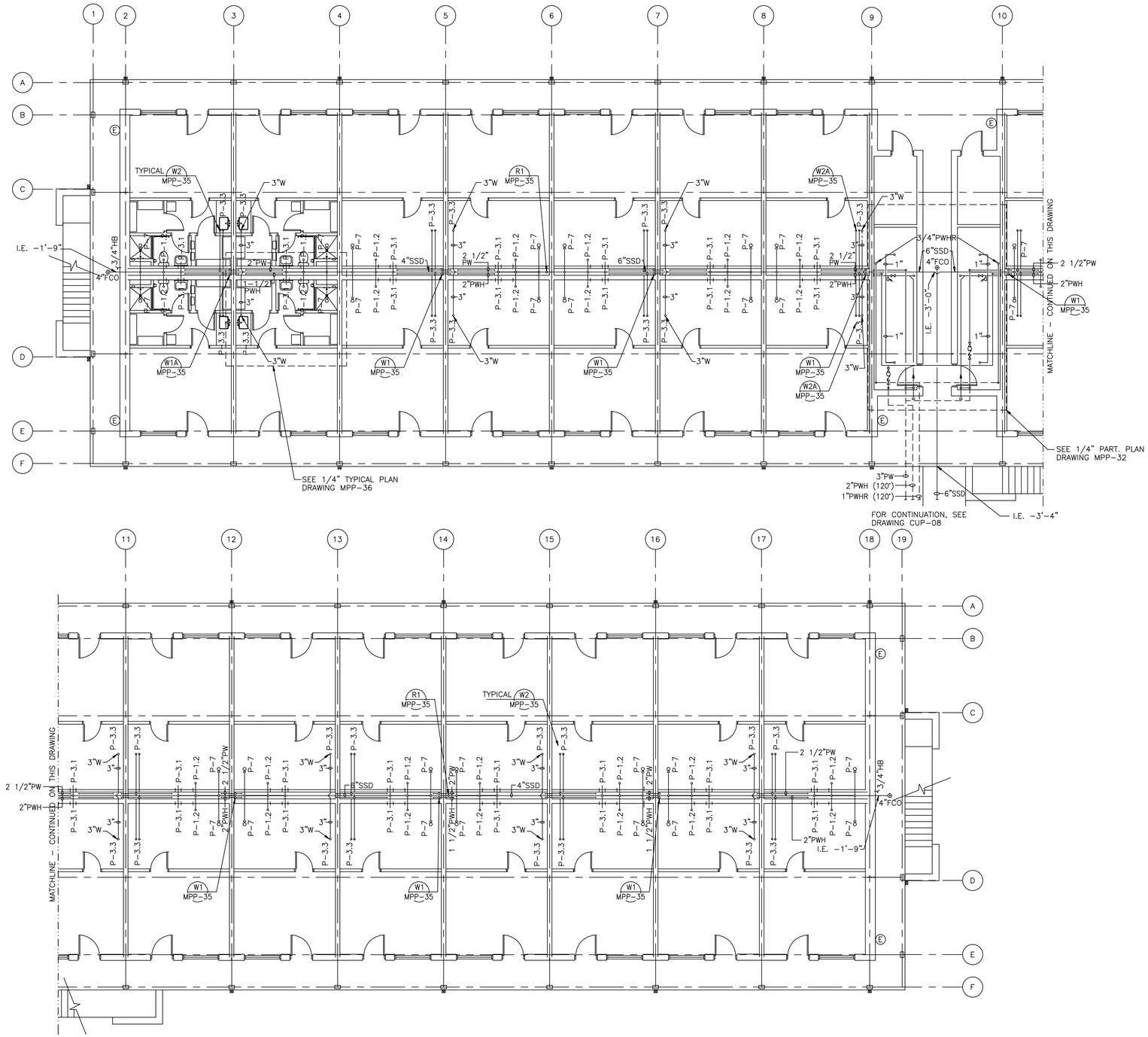

BEQ "A" PLUMBING & FIRE PROTECTION – FIRST FLOOR PLAN

1/8"=1'-0" FIN. FL. EL. 0'-0"

0 4 8 16 24
1/8"=1'-0"

J.A. JONES MANAGEMENT SERVICES
J.A. JONES OF THE CAROLINAS
LOCKWOOD GREENE
Consulting • Design • Construction

DSGN TW	DR TSS	CHK PST	
SUPV BMC	CH ENGR RSS		
SUBMITTED BY (FIRM MEMBER-TITLE) Greg Smith VP			DATE 03-MAY-99
TECHNICAL BRANCH			
FPE			

DRAWING REVISIONS

Rev.	Description	Prep By	Date	Approvd.
0	FINAL DESIGN SUBMITTAL	TW	03-MY-99	BMc
1	ISSUE FOR RECORD	JPS	01JUNE01	RT

BEAUFORT, S.C.

MCAS

BACHELOR ENLISTED QUARTERS - PHASE IV

BEQ A (90 UNITS)

PLUMBING & FIRE PROTECTION - FIRST FLOOR PLAN

APPROVED

DATE

ETD FOR COMMANDER, NAVFAC

Naval Facilities Engineering Command
Southern Division
Charleston, South Carolina

RECORD DRAWING DATE 01-JUNE-2001

CODE I.D. NO. 80091

DRAWING SIZE: D

SPEC. NO.06-98-0690

CONSTRN. CONTR. NO. N62467-98-D-0690

NAVFAC DRAWING NO. 5364445

SHEET 13 OF 19

MPP-30

$$$$ USERNAME $$$$ $$$$ DATE&TIME $$$$ $$$$ DESIGN FILE NAME $$$$

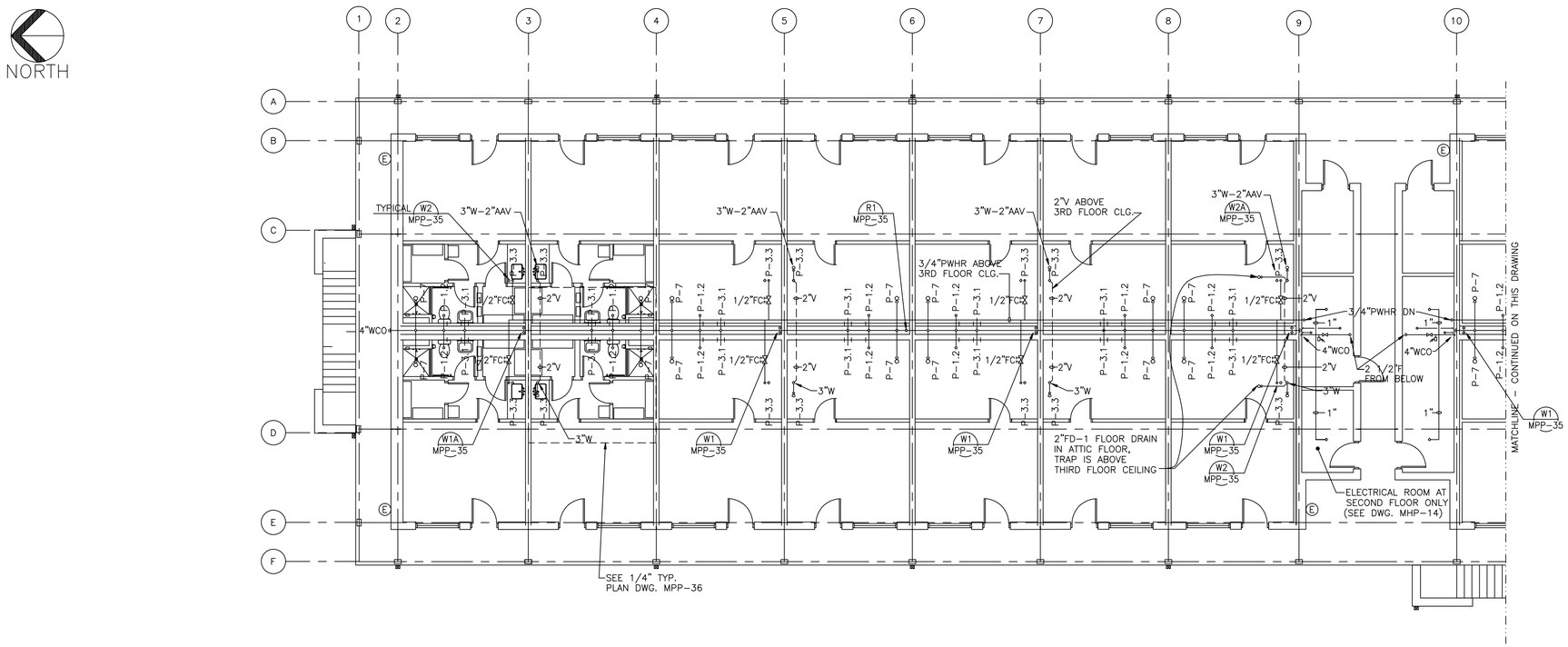

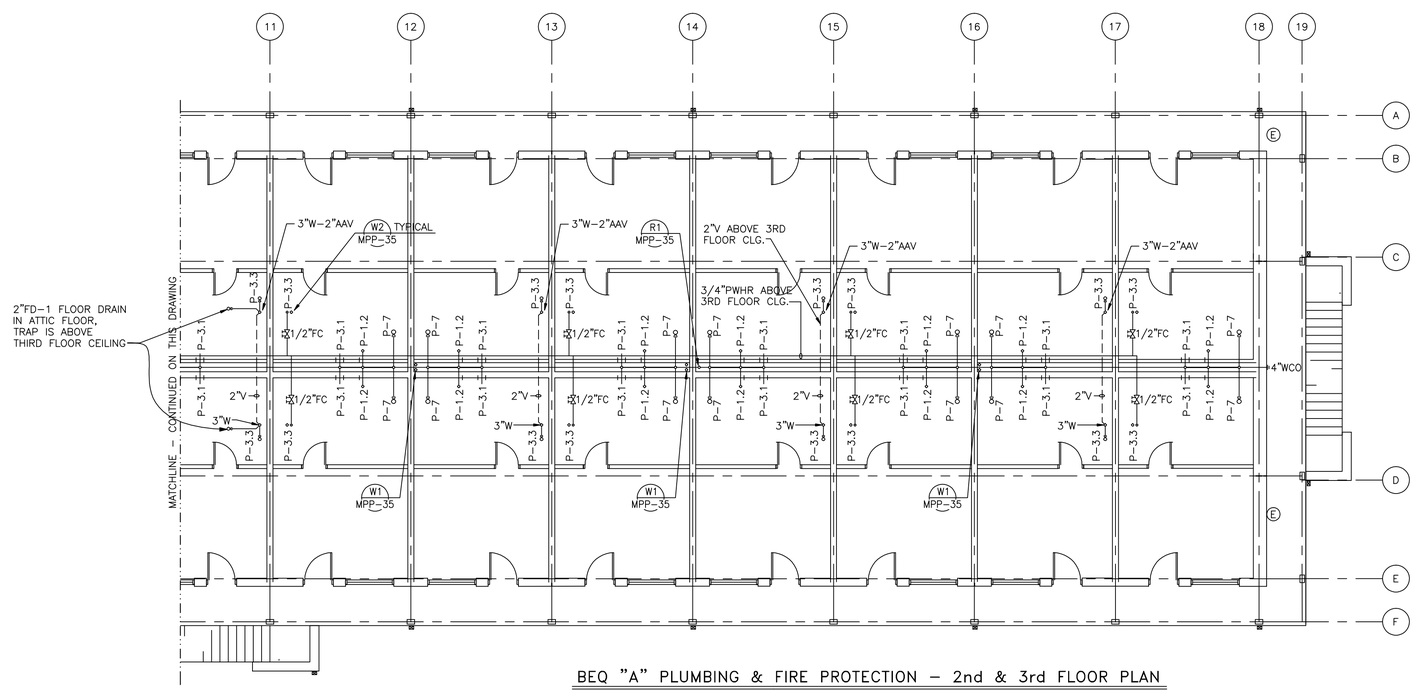

BEQ "A" PLUMBING & FIRE PROTECTION - 2nd & 3rd FLOOR PLAN

1/8"=1'-0"

0 4 8 16 24
1/8"=1'-0"

J.A. JONES MANAGEMENT SERVICES
J.A. JONES OF THE CAROLINAS
LOCKWOOD GREENE
Consulting • Design • Construction

DSGN TW	DR TSS	CHK PST	
SUPV BMC	CH ENGR RSS		
SUBMITTED BY (FIRM MEMBER-TITLE) Greg Smith VP			DATE 03-MAY-99
TECHNICAL BRANCH			
FPE			

DRAWING REVISIONS

Rev.	Description	Prep By	Date	Approvd.
0	FINAL DESIGN SUBMITTAL	TW	03-MY-99	BMc
1	ISSUE FOR RECORD	JPS	01JUN01	RT

MCAS BEAUFORT, S.C.

BACHELOR ENLISTED QUARTERS - PHASE IV

BEQ A (90 UNITS)

PLUMBING & FIRE PROTECTION - SECOND & THIRD FLOOR PLAN

APPROVED DATE

ETD FOR COMMANDER, NAVFAC

Naval Facilities Engineering Command
Southern Division
Charleston, South Carolina

RECORD DRAWING DATE 01-JUNE-2001
CODE I.D. NO. 80091
DRAWING SIZE: D
SPEC. NO.06-98-0690
CONSTRN. CONTR. NO. N62467-98-D-0690
NAVFAC DRAWING NO. 5364446
SHEET 14 OF 19
MPP-31

$$$$ USERNAME $$$$ $$$$ DATE&TIME $$$$ $$$$ DESIGN FILE NAME $$$$

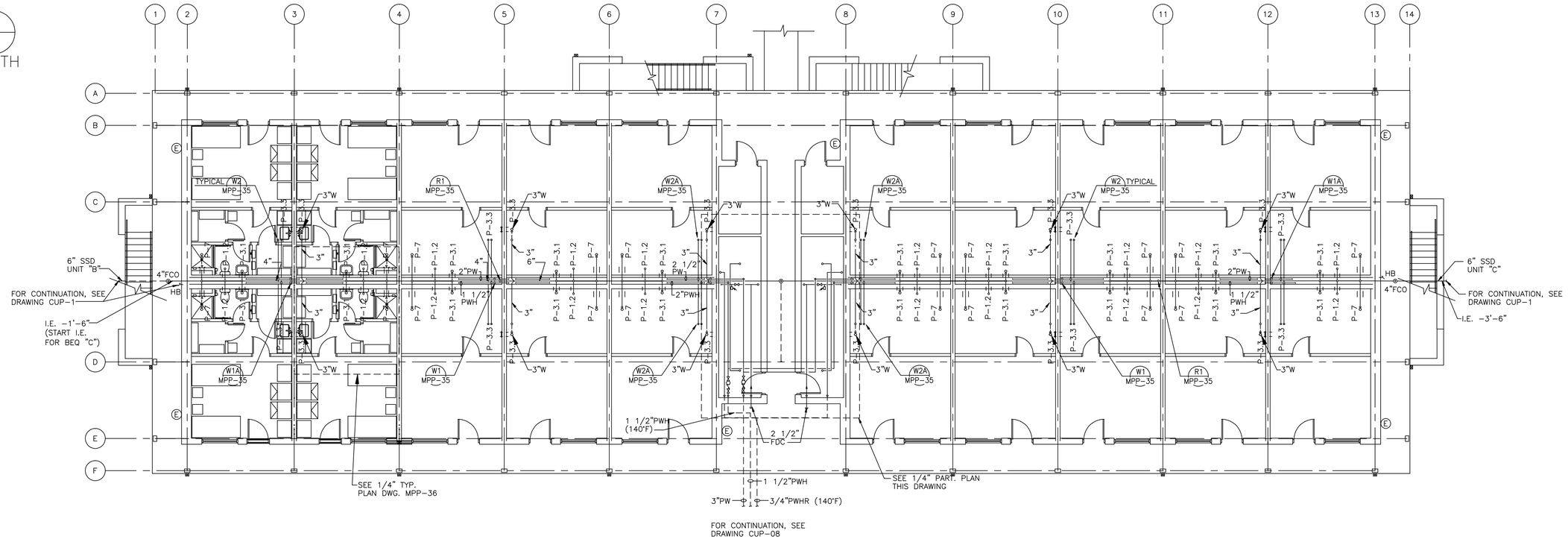

BEQ "B" & "C" PLUMBING & FIRE PROTECTION – FIRST FLOOR PLAN

1/8"=1'-0" FIN. FL. EL. 0'-0"

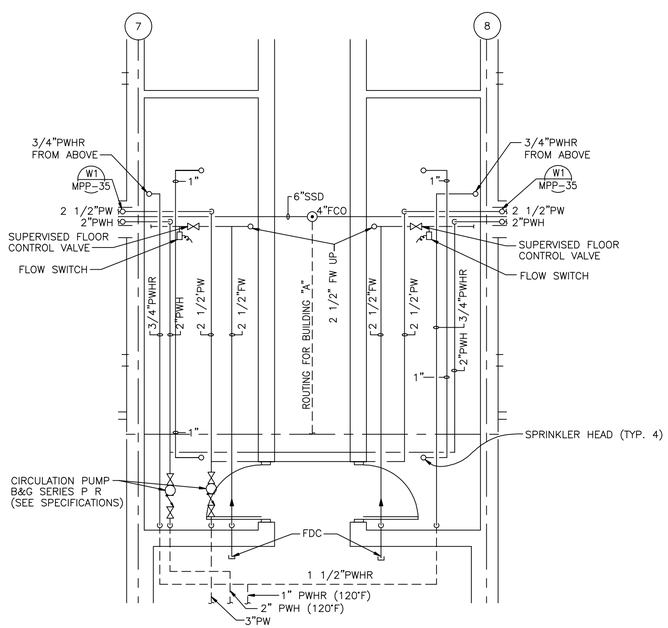

LARGE SCALE CHASE AREA

1/4"=1'-0"

0 4 8 12
1/4"=1'-0"

0 4 8 16 24
1/8"=1'-0"

J.A. JONES DESIGNERS & SERVICES
J.A. JONES OF THE CAROLINAS
LOCKWOOD GREENE Consulting•Design•Construction

DSGN TW	DR TSS	CHK PST	
SUPV BMC	CH ENGR RSS		DATE 03-MAY-96
SUBMITTED BY (FIRM MEMBER–TITLE) Greg Smith V.P.			
TECHNICAL BRANCH			
FPE			

DRAWING REVISIONS

Rev.	Description	Prep By	Date	Approvd.
0	FINAL DESIGN SUBMITTAL	TW	03-MY-96	BMC
1	ISSUE FOR RECORD	JPS	01JUN2001	RT

MCAS BEAUFORT, S.C.

BACHELOR ENLISTED QUARTERS – PHASE IV

BEQ B & C (60 UNITS)

PLUMBING & FIRE PROTECTION – FIRST FLOOR PLAN

APPROVED

DATE ED FOR COMMANDER, NAVFAC

Naval Facilities Engineering Command
Southern Division
Charleston, South Carolina

RECORD DRAWING DATE 01-JUNE-2001

CODE I.D. NO. 80091

DRAWING SIZE: D

SPEC. NO.06-98-0690

CONSTRN. CONTR. NO. N62467-98-D-0690

NAVFAC DRAWING NO. 5364447

SHEET 15 OF 19

MPP-32

$$$$ USERNAME $$$$ $$$$ DATE&TIME $$$$ $$$$ DESIGN FILE NAME $$$$

NORTH

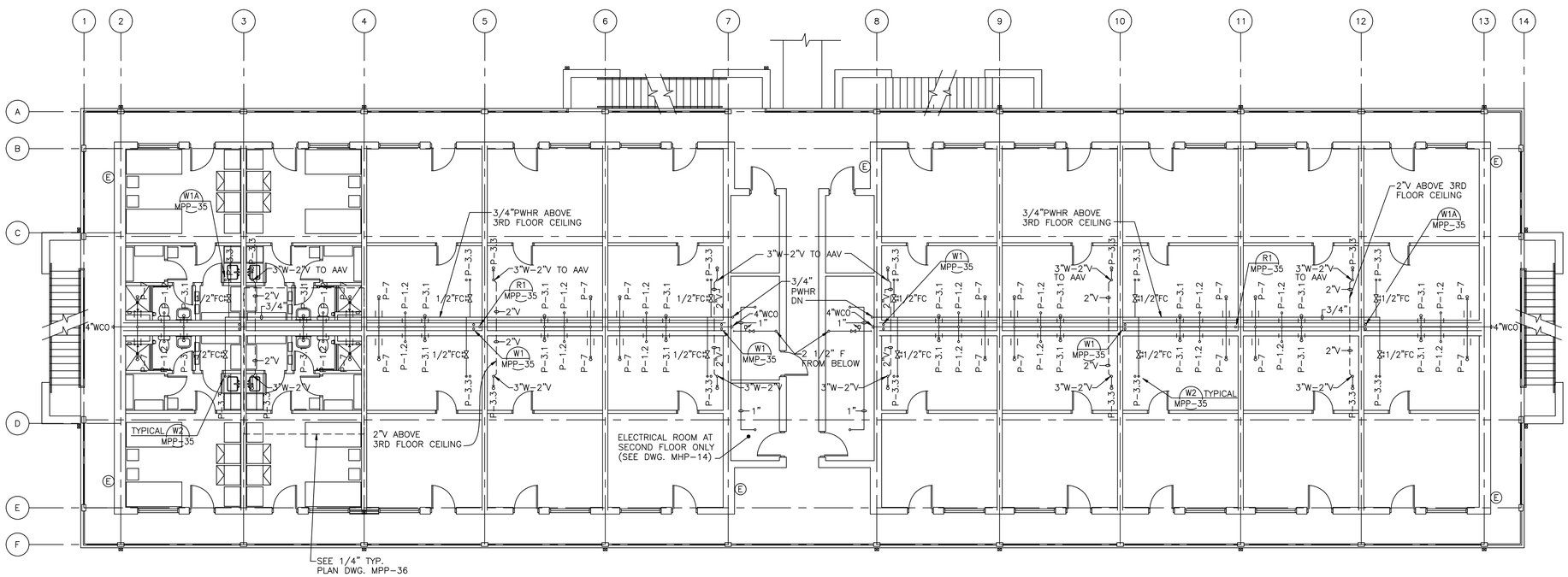

BEQ "B" & "C" PLUMBING & FIRE PROTECTION – 2nd & 3rd FLOOR PLAN

1/8"=1'-0"

0 4 8 16 24

1/8"=1'-0"

J.A. JONES MANAGEMENT SERVICES, INC. OF THE CAROLINAS

LOCKWOOD GREENE Consulting•Design•Construction

DSGN TW	DR TSS	CHK PST	
SUPV BMC	CH ENGR RSS		
SUBMITTED BY (FIRM MEMBER–TITLE) Greg Grant V.P.			DATE 03-MAY-99
TECHNICAL BRANCH			
FPE			

DRAWING REVISIONS

Rev.	Description	Prep By	Date	Approvd.
0	FINAL DESIGN SUBMITTAL	TW	03-MY-99	BMc
1	ISSUE FOR RECORD	JPS	01JUN01	RT

MCAS BEAUFORT, S.C.

BACHELOR ENLISTED QUARTERS – PHASE IV

BEQ B & C (60 UNITS)

PLUMBING & FIRE PROTECTION – SECOND & THIRD FLOOR PLAN

APPROVED

DATE ETD FOR COMMANDER, NAVFAC

Naval Facilities Engineering Command

Southern Division

Charleston, South Carolina

RECORD DRAWING DATE 01-JUNE-2001

CODE I.D. NO. 80091

DRAWING SIZE: D

SPEC. NO.06-98-0690

CONSTRN. CONTR. NO. N62467-98-D-0690

NAVFAC DRAWING NO. 5364448

SHEET 16 OF 19

MPP-33

$$$$ USERNAME $$$$ $$$$ DATE&TIME $$$$ $$$$ DESIGN FILE NAME $$$$

NORTH

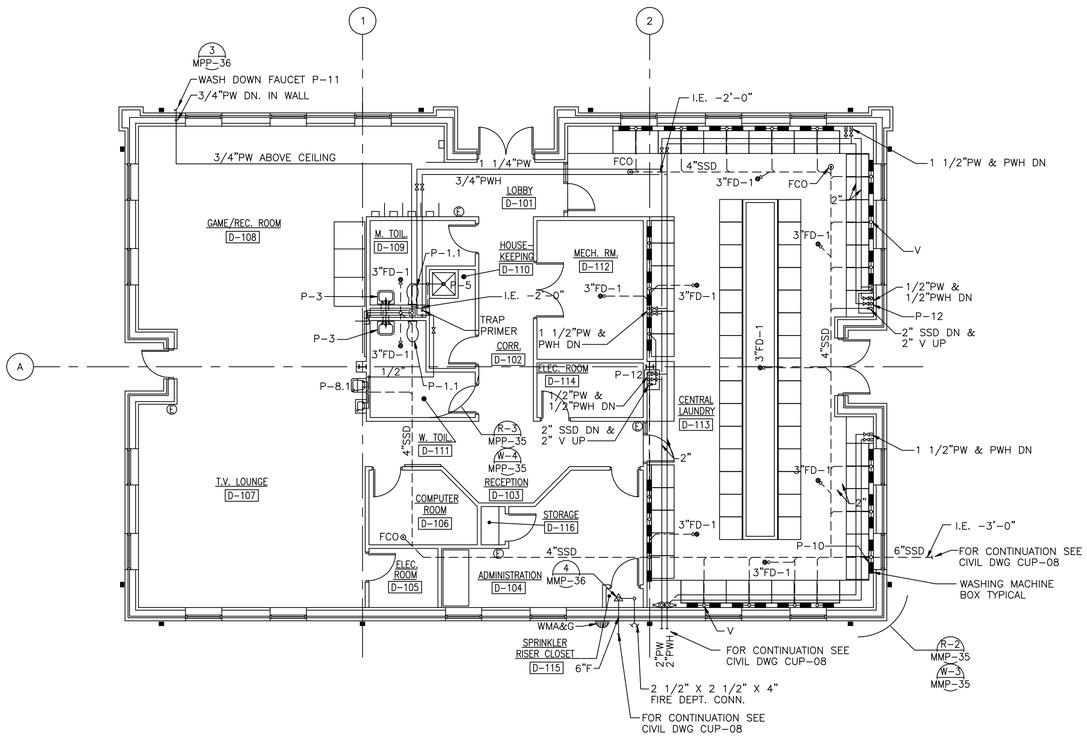

PLUMBING & FIRE PROTECTION FLOOR PLAN

1/8"=1'-0" F.F. EL. 0'-0"

0 4 8 16 24
1/8"=1'-0"

J.A. JONES MANAGEMENT SERVICES
J.A. JONES OF THE CAROLINAS
LOCKWOOD GREENE
Consulting•Design•Construction

DSGN TW	DR TSS	CHK PST	
SUPV BMC	CH ENGR RSS		
SUBMITTED BY (FIRM MEMBER-TITLE) Greg Grant V.P.			DATE 03-MAY-99
TECHNICAL BRANCH			
FPE			

DRAWING REVISIONS

Rev.	Description	Prep By	Date	Approvd.
0	FINAL DESIGN SUBMITTAL	TW	03-MAY-99	BMC
1	ISSUE FOR RECORD	JPS	01-JUNE-01	RT

MCAS BEAUFORT, S.C.

BACHELOR ENLISTED QUARTERS - PHASE IV

COMMUNITY CENTER

PLUMBING & FIRE PROTECTION - FLOOR PLAN

APPROVED

DATE ETD FOR COMMANDER, NAVFAC

Naval Facilities Engineering Command
Southern Division
Charleston, South Carolina

RECORD DRAWING DATE 01-JUNE-2001

CODE I.D. NO. 80091

DRAWING SIZE: D

SPEC. NO.06-98-0690

CONSTRN. CONTR. NO. N62467-98-D-0690

NAVFAC DRAWING NO. 5364449

SHEET 17 OF 19

MPP-34

$$$$ USERNAME $$$$ $$$$ DATE&TIME $$$$ $$$$ DESIGN FILE NAME $$$$

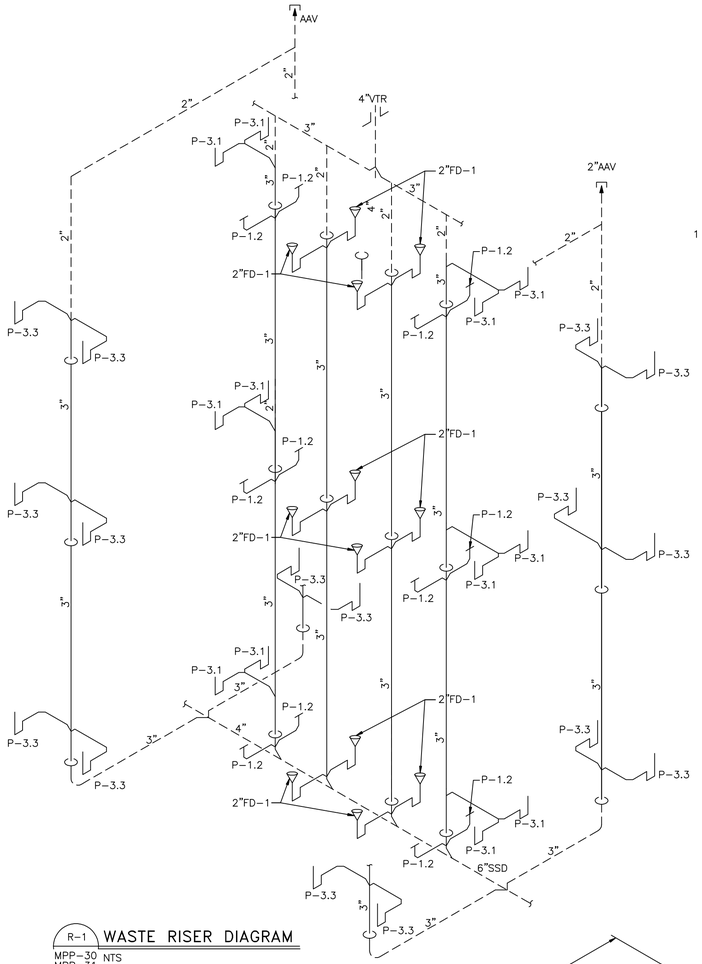

R-1 WASTE RISER DIAGRAM
MPP-30 NTS
MPP-31
MPP-32
MPP-33

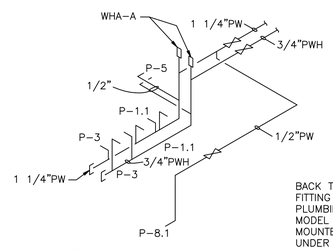

W-4 WATER RISER DIAGRAM
MPP-34 NTS

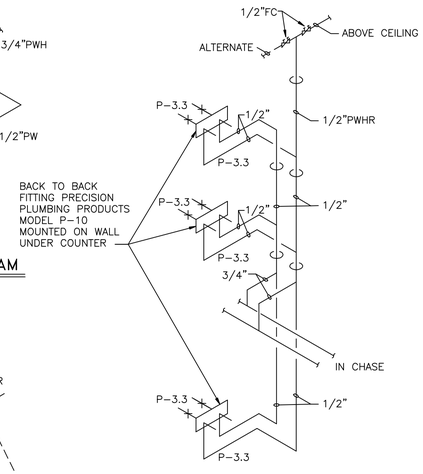

W-2 WATER RISER DIAGRAM
MPP-30 NTS
MPP-31
MPP-32
MPP-33

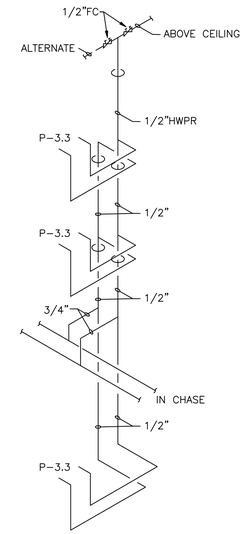

W-2A WATER RISER DIAGRAM
MPP-30 NTS
MPP-31
MPP-32
MPP-33

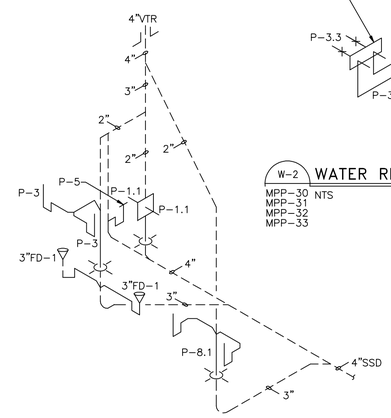

R-3 WASTE RISER DIAGRAM
MPP-34 NTS

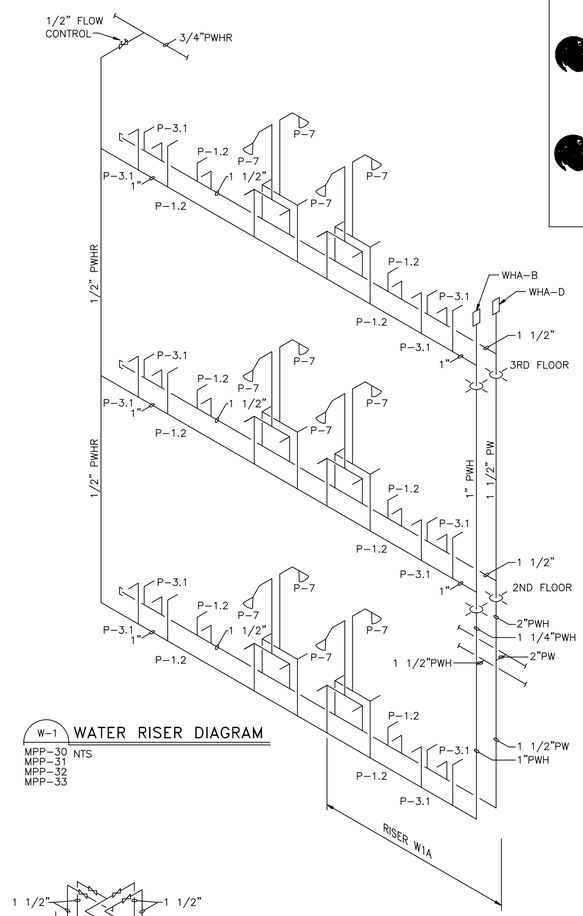

W-1 WATER RISER DIAGRAM
MPP-30 NTS
MPP-31
MPP-32
MPP-33

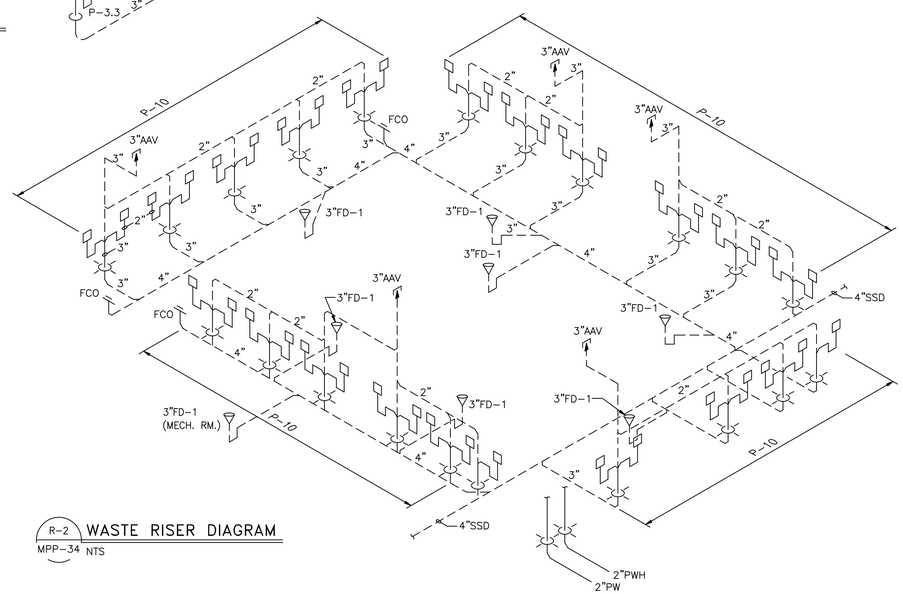

R-2 WASTE RISER DIAGRAM
MPP-34 NTS

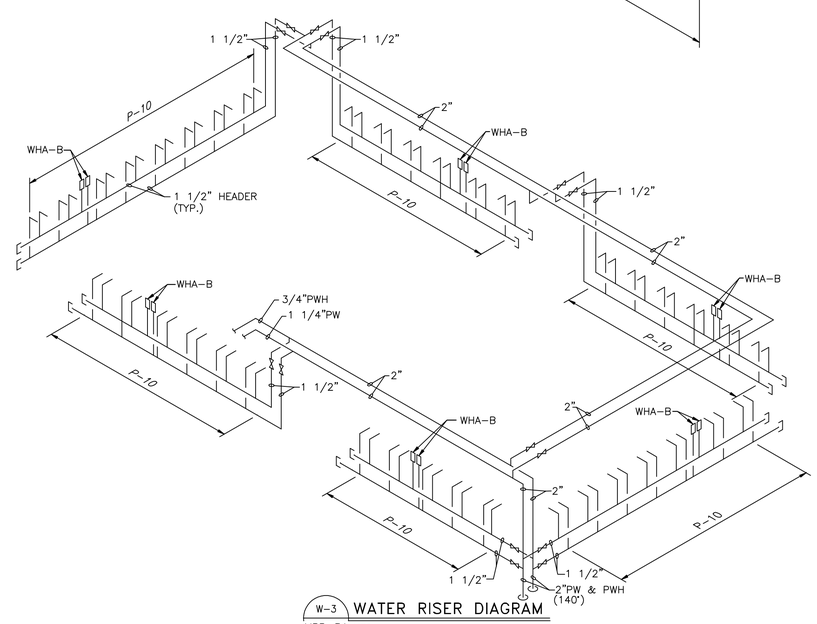

W-3 WATER RISER DIAGRAM
MPP-34 NTS

JA. JONES
ENGINEERS
ARCHITECTS
SURVEYORS
OF THE CAROLINAS

LOCKWOOD GREENE
Consulting•Design•Construction

DSGN	TW	DR	TSS	CHK	PST
SUPV	BMC	CH ENGR	RSS	
SUBMITTED BY (FIRM MEMBER–TITLE)				DATE 03-MAY-99
TECHNICAL BRANCH				
FPE				

DRAWING REVISIONS

Rev.	Description	Prep By	Date	Approvd.
0	FINAL DESIGN SUBMITTAL	TW	03-MY-99	BMc
1	ISSUE FOR RECORD	JPS	01-JUNE01	RT

MCAS BEAUFORT, S.C.

BACHELOR ENLISTED QUARTERS – PHASE IV

BEQ A,B,C & COMMUNITY CENTER
PLUMBING & FIRE PROTECTION – RISER DIAGRAMS

APPROVED

DATE ETD FOR COMMANDER, NAVFAC

Naval Facilities Engineering Command
Southern Division
Charleston, South Carolina

RECORD DRAWING DATE 01-JUNE-2001
CODE I.D. NO. 80091
DRAWING SIZE: D
SPEC. NO.06-98-0690
CONSTRN. CONTR. NO. N62467-98-D-0690
NAVFAC DRAWING NO. 5364450
SHEET 18 OF 19

MPP-35

$$$$ USERNAME $$$$ $$$$ DATE&TIME $$$$ $$$$ DESIGN FILE NAME $$$$

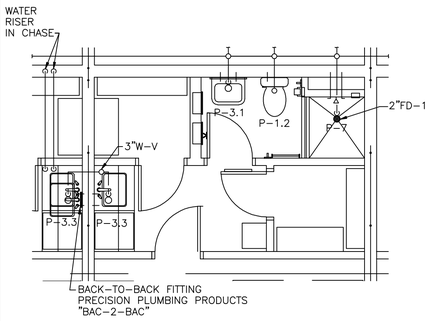

TYPICAL ROOM PLUMBING PLAN

1/4"=1'-0"

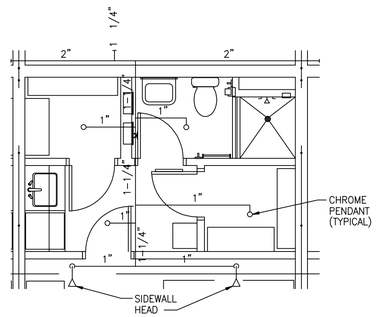

TYPICAL ROOM FIRE PROTECTION PLAN

1/4"=1'-0"

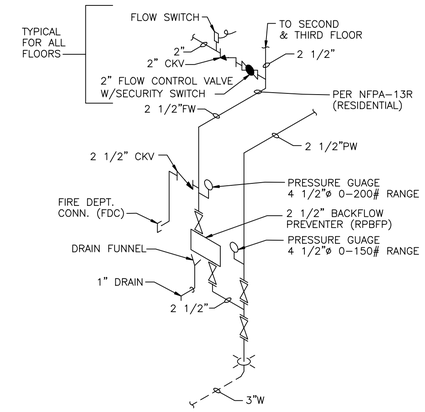

FIRE RISER
DETAIL 2 MPP-32 / MPP-36

NTS

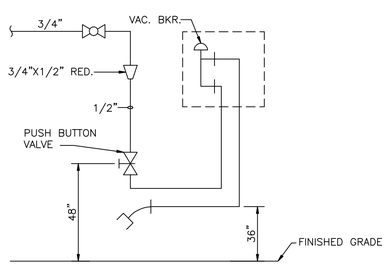

P-11
DETAIL 3 MPP-34 / MPP-36

NTS

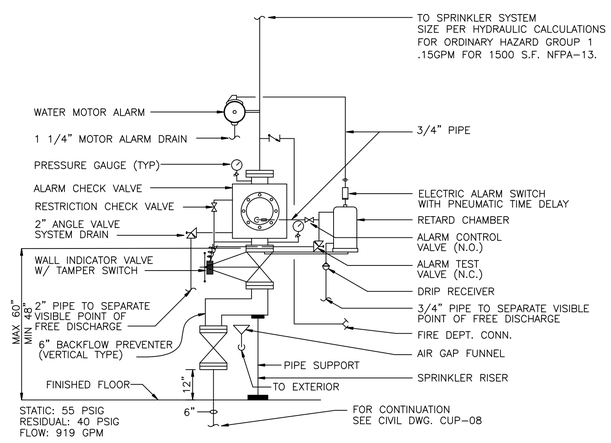

WET PIPE SPRINKLER RISER
DETAIL 4 MPP-34 / MPP-36

NTS

FIXTURE SCHEDULE		SERVICE			HGT TO RIM
SYMBOL	TYPE	CW	HW	W	
P-1.1	WATER CLOSET (ADA)	1"	–	4"	18"
P-1.2	WATER CLOSET, FLOOR MOUNTED	1"	–	4"	15"
P-3	LAVATORY, WALL HUNG (ADA)	1/2"	1/2"	1 1/4"	31"
P-3.1	LAVATORY, WALL HUNG	1/2"	1/2"	1 1/4"	31"
P-3.3	SINK	1/2"	1/2"	1 1/2"	COUNT.
P-5	MOP SINK	1/2"	1/2"	3"	–
P-7	SHOWER	1/2"	1/2"	2"	–
P-8.1	ELECTRIC WATER COOLER (ADA)	1/2"	–	1 1/4"	31"
P-10	WASHING MACHINE OUTLET	1/2"	1/2"	2"	36"
P-11	WASHDOWN FAUCET	1/2"	–	–	36"
P-12	LAUNDRY TUB SINK	1/2"	1/2"	2"	–

FIRE EXTINGUISHER SCHEDULE		
SYMBOL	TYPE (SEE SPECIFICATION)	UL – RATING
Ⓔ	10 lb. DRY CHEMICAL	4A:60B:C

0 4 8 12

1/4"=1'-0"

JA JONES ENGINEERS
JA JONES OF THE CAROLINAS
LOCKWOOD GREENE
Consulting • Design • Construction

DSGN	TW	DR	TSS	CHK	PST
SUPV	BMC	CH ENGR	RSS		
SUBMITTED BY (FIRM MEMBER-TITLE)				DATE	03-MAY-99
TECHNICAL BRANCH					
FPE					

DRAWING REVISIONS

Rev.	Description	Prep By	Date	Approvd.
0	FINAL DESIGN SUBMITTAL	TW	03-MAY-99	BMC
1	CHANGE PER COMMENTS	TW	30JUL'99	L I
2	ISSUE FOR RECORD	JPS	01JUN01	RT

MCAS
BEAUFORT, S.C.
BACHELOR ENLISTED QUARTERS - PHASE IV
BEQ A.B.C & COMMUNITY CENTER
PLUMBING & FIRE PROTECTION - TYPICAL ROOM DETAILS,
PLUMBING DETAILS & SCHEDULES

APPROVED DATE

EFD FOR COMMANDER, NAVFAC

Naval Facilities Engineering Command
Southern Division
Charleston, South Carolina

RECORD DRAWING DATE
01-JUNE-2001

CODE I.D. NO. 80091

DRAWING SIZE: D

SPEC. NO.06-98-0690

CONSTRN. CONTR. NO.
N62467-98-D-0690

NAVFAC DRAWING NO.
5364451

SHEET 19 OF 19

MPP-36

$$$$ USERNAME $$$$ $$$$ DATE&TIME $$$$ $$$$ DESIGN FILE NAME $$$$

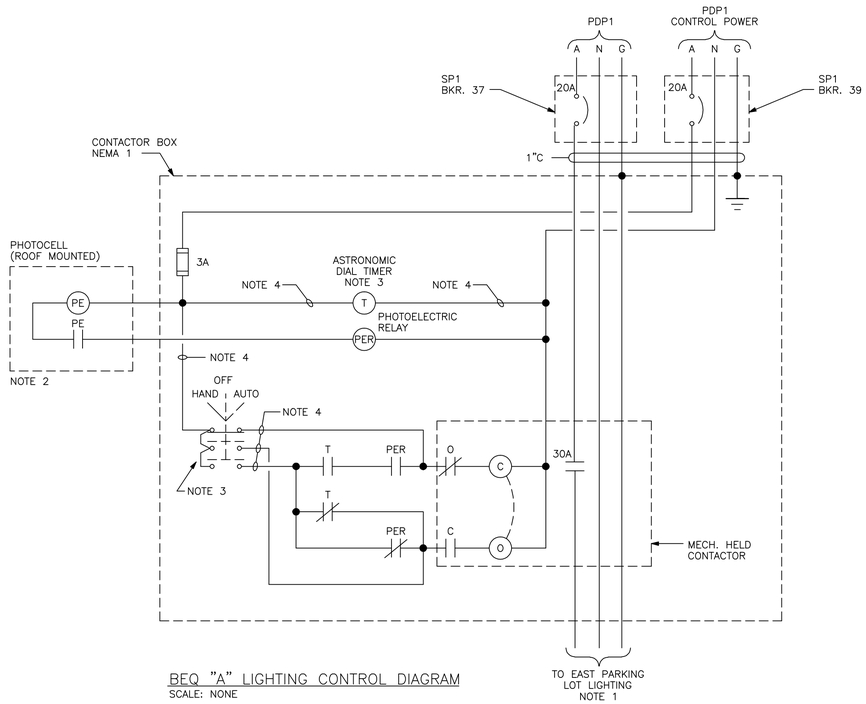

BEQ "A" LIGHTING CONTROL DIAGRAM
SCALE: NONE

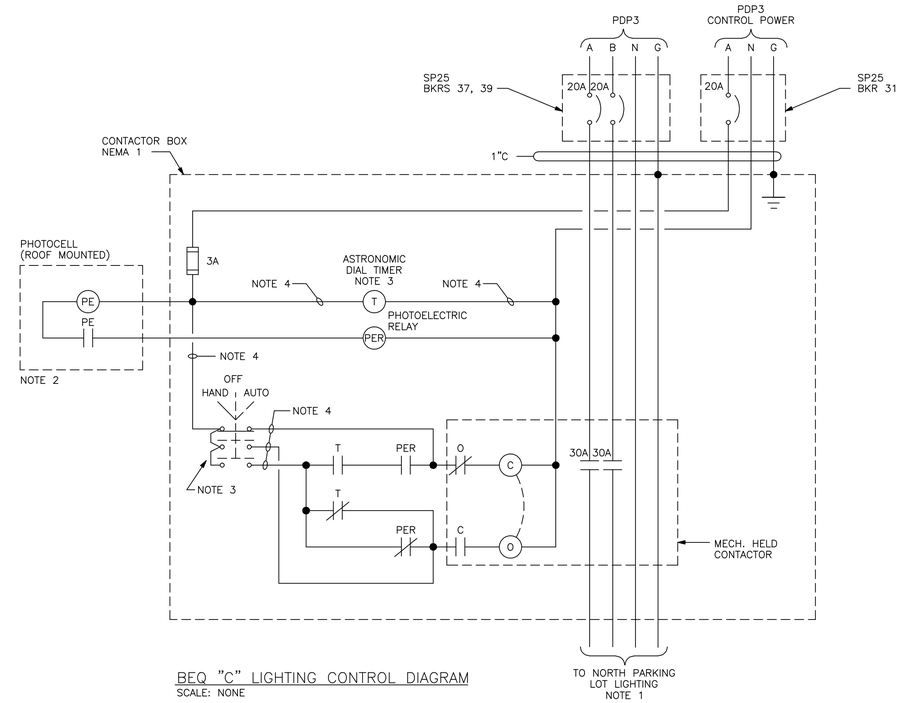

BEQ "C" LIGHTING CONTROL DIAGRAM
SCALE: NONE

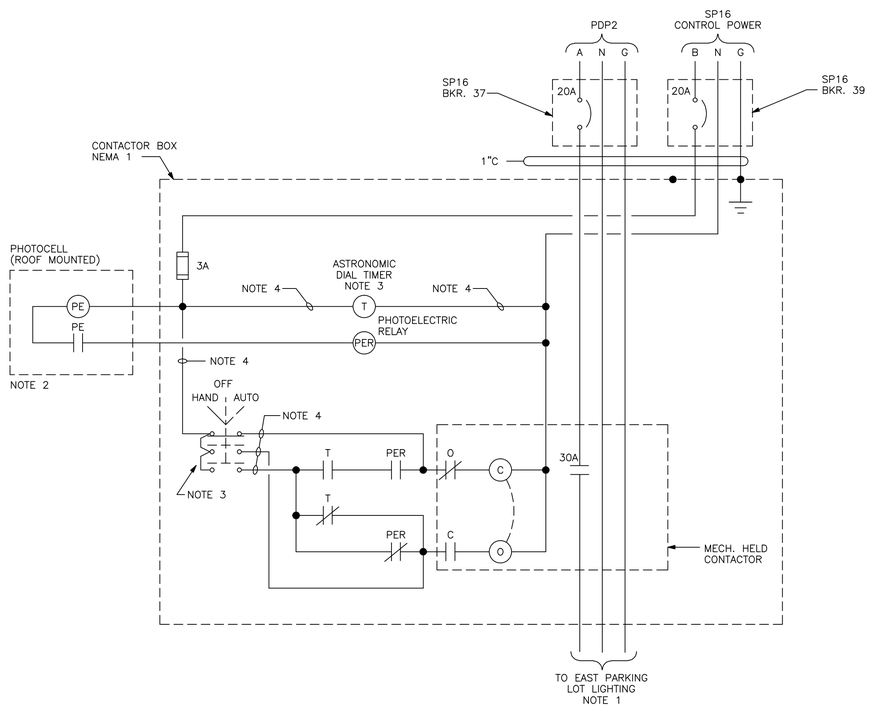

BEQ "B" LIGHTING CONTROL DIAGRAM
SCALE: NONE

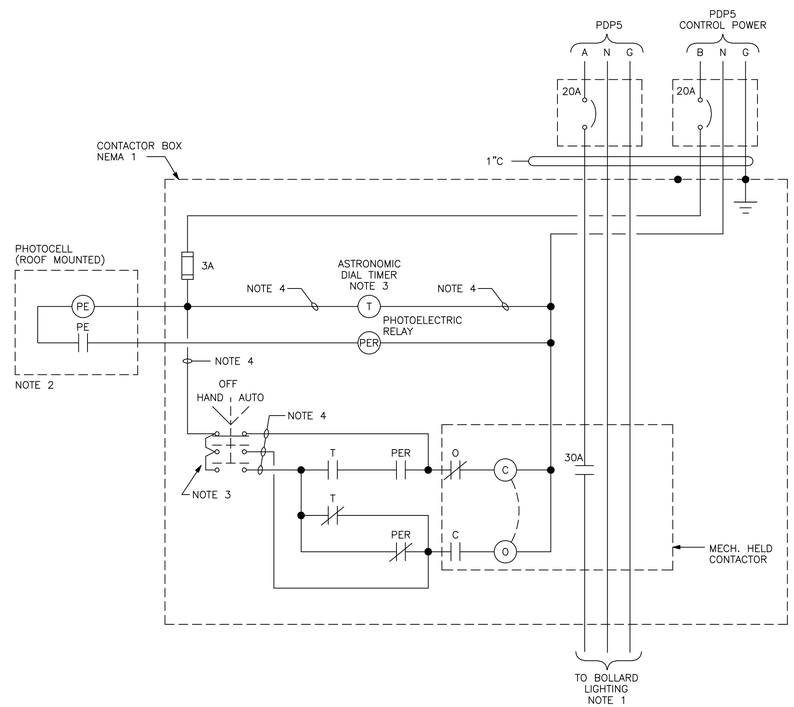

UTIL. BLDG. LIGHTING CONTROL DIAGRAM
SCALE: NONE

NOTES:

1. REFER TO DRAWINGS ESW-01 AND ESW-02 FOR LOCATION AND WIRE SIZES FOR PARKING LOT AND BOLLARD LIGHTS.
2. PHOTOCELL CONTACTS ARE N.O. (NORMALLY OPEN) DURING DAYLIGHT HOURS.
3. SELECTOR SWITCH AND ASTRONOMIC DIAL TIMER MOUNTED ON CONTACTOR BOX DOOR.
4. USE HIGH STRAND COPPER CONDUCTORS FOR WIRING TO DOOR MOUNTED DEVICES.

J.A. JONES MANAGEMENT SERVICES
J.A. JONES OF THE CAROLINAS
LOCKWOOD GREENE
Consulting•Design•Construction

DSGN G. WEBB	DR K. PHELPS	CHK G. WILLIAMS
SUPV C. CARROS	CH ENGR B. STYRON	
SUBMITTED BY (FIRM MEMBER TITLE): V.P. 03-MAY-1999		DATE
TECHNICAL BRANCH		
FPE		

DRAWING REVISIONS

Rev.	Description	Prep By	Date	Approvd.
0	FINAL DESIGN SUBMITTAL	G.WEBB	03MAY99	B.STYRON
1	ISSUE FOR RECORD	BWS	01JUN01	

MCAS BEAUFORT, S.C.
BACHELOR ENLISTED QUARTERS - PHASE IV
ELECTRICAL
LIGHTING CONTROLS SCHEMATICS
DATE
APPROVED

Naval Facilities Engineering Command
Southern Division
Charleston, South Carolina

RECORD DRAWING DATE
CODE I.D. NO. 80091
DRAWING SIZE: D
SPEC. NO.06-98-0690
CONSTRN. CONTR. NO. N62467-98-D-0690
NAVFAC DRAWING NO. 5364457
SHEET 1 OF 44
EEL-05

ETD FOR COMMANDER, NAVFAC

$$$$ USERNAME $$$$ $$$$ DATE&TIME $$$$ $$$$ DESIGN FILE NAME $$$$

LUMINAIRES

M2	HID LUMINAIRE WITH TYPE
	WALL MOUNTED UNIT, WITH ANY SYMBOL
F1 2	FLUORESCENT LUMINAIRE WITH TYPE AND BRANCH CIRCUIT NUMBER
F1E	EMERGENCY/NIGHT LIGHT FIXTURE
EX1	EXIT LIGHT WITH TYPE, M.H. 6 IN. ABOVE DOOR. SHADED AREA INDICATES FACE OF SIGN, ARROWS AS INDICATED.
EL1	EMERGENCY LIGHT/BATTERY PACK M.H. 8'–0" A.F.F. OR AS INDICATED
EL1R	REMOTE HEADS SINGLE OR TWIN ASSOCIATED WITH TYPE EL1. M.H. 8'–0" A.F.F. OR AS INDICATED
	OUTDOOR POLE MOUNTED FLOOD LIGHT LUMINAIRE WITH INDICATING AIMING POINT.

LOCAL SWITCHES

S	LOCAL TOGGLE SWITCH, SINGLE POLE SINGLE THROW, M.H. 48"
S_3	LOCAL TOGGLE SWITCH, 3–WAY, M.H. 48" EXCEPT 46" IN BLOCK WALLS
PE	PHOTO ELECTRIC CELL FOR LIGHTING CONTROL

SIGNAL SYSTEMS OUTLETS & EQUIPMENT

TC	TELEPHONE TERMINAL CABINET, SIZED AS NOTED M.H. SAME AS FOR SERVICE PANEL
	MISCELLANEOUS SIGNAL SYSTEMS TERMINAL CABINET, SIZED AS REQUIRED
D	WALL MOUNTED COMBINATION TELEPHONE AND LAN OUTLET M. H. 18" U. N. O.
P	WALL MOUNTED TELEPHONE OUTLET FOR PAY PHONE M. H. 30" U. N. O.
B	SPRINKLER WATER MOTOR GONG M. H. 8'–0" U. N. O.
M	DOOR STATUS MONITOR BMS (OPEN OR CLOSED)
C	CABLE TV COAX WALL OUTLET, MOUNTING HEIGHT INDICATED ON DRAWING
I W	INTERCOM/PUBLIC ADDRESS SYSTEM WALL UNITS, MOUNTING HEIGHT 18" U. N. O.
I	INTERCOM/PUBLIC ADDRESS SYSTEM, TAMPER RESISTANT, WALL MOUNTED, M.H. 60"
A	PUBLIC ADDRESS 10 WATT AMPLIFIER
PA	PA SPEAKER, FOR MOUNTING IN CEILING OF FINISHED ROOMS
PA	8 OHM LOUDSPEAKER, INDUSTRIAL AREA WALL BRACKET MOUNTED M.H. AS INDICATED

F.A. SYMBOLS

F 3	FIRE ALARM MANUAL PULL STATION WITH ZONE NUMBER M.H. 48" OR AS INDICATED
F	FIRE ALARM HORN AUDIO/VISUAL DEVICE WITH ROTATING BEACON M.H. AS INDICATED PROVIDE HORN AND STROBE FOR VIBRATING DIAPHRAM TYPE.
PRE–ACTION P PA	(ASR) FIRE WATER RISER PIPE ALARM CONTACTS. CONTACTS SPRINKLER LINE PRESSURE,
WET PIPE P WP	WATER FLOW (TRIPPED) BY MECHANICAL SPECIFICATIONS
TS	VALVE TAMPER SWITCH CONTACTS
SD 6	SMOKE DETECTOR, CEILING MOUNTED, NUMBER INDICATES F. A. ZONE
6 SD W OR D	SMOKE DETECTOR 'W' INDICATES WALL MOUNTED, "D" INDICATES DUCT MOUNTED, NUMBER INDICATES F.A. ZONE

RECEPTACLES

	DUPLEX CONVENIENCE OUTLET – 120V. GROUNDING TYPE NEMA 5–20R M. H. 18" IN OFFICES & 30" IN INDUSTRIAL AREAS

MOTORS

5	MOTOR, A.C., 60HZ NUMERAL INDICATES HORSEPOWER RATING
	MOTOR STARTER, 3ϕ, WITH THERMAL O.L. PROTECTION, MAGNETICALLY OPERATED CONTACTS AND MANUALLY OPERATED SAFETY DISCONNECT SWITCH & PROVISIONS FOR LOCKOUT
1	MOTOR STARTER, MAGNETICALLY OPERATED, 3ϕ, WITH OVERLOAD PROTECTION TO MATCH MOTOR CHARACTERISTICS AND NEMA SIZE AS INDICATED,

MOTORS (CONT.)

S_M	MANUAL MOTOR STARTER AND DISCONNECT SWITCH FOR 1ϕ FRACTIONAL H.P. MOTORS WITH O. L. WHEN REQUIRED
	ELECTRICALY OPERATED SINGLE PHASE MOTOR STARTER AND DISCONNECT SWITCH HP RATED WITH O.L. AND PROVISIONS FOR LOCKOUT.

GROUNDING

	GROUNDING ROD 3/4 " DIA. x 10'–0" LONG COPPER CLAD STEEL
	GROUNDING CONDUCTOR – DIRECT BURIED
	CONNECTION TO GROUNDING SYSTEM CONDUCTORS
	GROUNDING JUMPER #2 AWG. BARE CU
	EQUIPMENT CONNECTION TO BUILDING GROUNDING SYSTEM

RACEWAY AND FITTINGS

	CONDUIT EXPOSED IN UNFINISHED AREAS
	CONDUIT WITH SEALING FITTING
	CONDUIT CONCEALED BENEATH FLOOR OR UNDERGROUND
	CONDUIT CONCEALED IN CEILING OR WALLS IN FINISHED AREAS
	CONDUIT TURNING UP
	CONDUIT TURNING DOWN OR TERMINATING AT EQUIPMENT, PROVIDE A JUNCTION BOX
LP2–1	"HOME–RUN" TO PANELBOARDS. PANELBOARD DESIGNATION AND CIRCUIT NUMBER AS INDICATED.
PHASES NEUTRAL	MARKS INDICATE NUMBER OF #12 CONDUCTORS IN RACEWAY, 1#12 GREEN GROUNDING CONDUCTOR REQUIRED IN ALL RACEWAYS BUT NOT SHOWN, UNLESS NOTED OTHERWISE
J	JUNCTION BOX W/BLANK COVER
	CONDUIT RUN WITH JUNCTION BOX FOR A BRANCH CONDUIT DROP TO EQUIPMENT.
	CONDUIT RUN WITH JUNCTION BOX FOR A BRANCH CONDUIT.
5	CIRCUIT AND RACEWAY IDENTIFICATION FOR SCHEDULED SIZES OF WIRE AND CONDUIT ON SINGLE LINE DRAWINGS

PROTECTIVE & MISC. POWER EQUIPMENT

	PANELBOARD, POWER RATING AS INDICATED M.H. SEE SPEC. 16402
	SERVICE PANEL 208Y/120V–3ϕ–4W M.H. SEE SPEC. 16402
	SAFETY DISCONNECT SWITCH, HP RATED WHEN USED WITH MOTORS. 3–POLE FOR 3ϕ MOTORS AND 2–POLE FOR 1ϕ MOTORS, PROVISIONS FOR A LOCK. M.H. 6'–6" OR AS INDICATED
	FIRE ALARM CONTROL PANEL
CB	CIRCUIT BREAKER/DISCONNECT SWITCH, 3P OR AS INDICATED, M.H. 6'–6" OR AS INDICATED.
30A F 2P	KNIFE SWITCH, 30A–2P, M.H. 6'–6" WITH PROVISIONS FOR A LOCK–IN "OPEN" POSITION
T 15KVA 3	DRY TYPE TRANSFORMER, KVA AND NUMBER OF PHASES OF INDICATED M.H. AS INDICATED.

SECTION OR DETAIL — 2 EGE–07 — SCALE

SECT. NUMBER DET. NUMBER DEVICE DETAIL NUMBER

2 EGE–07 — SECTION NUMBER; DWG. WHERE SECTION IS SHOWN

DWG. WHERE SECTION OR DETAIL IS CUT

DWG. WHERE SECTION OR DETAIL IS SHOWN

AREA COVERED BY DETAIL — 2 EGE–07 — DETAIL NUMBER; DWG. WHERE DETAIL IS SHOWN

123 DOOR NUMBER — 2 EGE–07 — ELEV. NUMBER; DWG. WHERE ELEV. IS SHOWN

SINGLE LINES

TR1	TRANSFORMER, DRY TYPE, 480V DELTA PRIMARY, 208Y/120V SECONDARY AS SCHEDULED OR INDICATED.
	TRANSFORMER, TOROIDAL TYPE
	TRANSFORMER WITH RATING PER ANSI STANDARD, WITH PRIMARY, SECONDARY VOLTAGE AS INDICATED
480 2 120	TRANSFORMER, INSTRUMENT POTENTIAL WITH QUANTITY AND VOLTAGE RATING
3 1600:5	TRANSFORMER, INSTRUMENT CURRENT, WITH QUANTITY AND CURRENT RATIO. PROVIDE MULTI RATIO CT'S
400AF / 300AT	BOLT–IN MOLDED CASE CIRCUIT BREAKER WITH AMPERE FRAME SIZE AND LONGTIME TRIP AMPERE SETTING
MCP / 15	MOTOR CIRCUIT PROTECTOR NUMBER REPRESENTS CONTINUOUS AMPERE FRAME SIZE,WITH ADJUSTABLE CALIBTATION INSTANTANEOUS TRIP FEATURE,SET TRIP BASED ON MOTOR CHARACTERISTICS AND MCP MFG. RECOMMENDATIONS.
30A	MAGNETIC CONTACTOR WITH CONTINUOUS AMPERE RATING
	THERMAL OVERLOAD DEVICE HEATER FOR MOTOR PROTECTION. SIZED PER MOTOR MANUFACTURER'S RECOMMENDATIONS
WHD	KILOWATTHOUR DEMAND METER WITH DEMAND INTERVAL REGISTER
	SYMBOL FOR DELTA CONNECTED CIRCUIT
	SYMBOL FOR A WYE CONNECTED CIRCUIT, GROUNDED AT THE TRANSFORMER PER NFPA 70 (NEC) ARTICLE 250–26
1	FEEDER DESIGNATION SEE CABLE AND CONDUIT SCHEDULE FOR QUANTITY AND SIZES

GENERAL NOTES:

1. THESE DRAWINGS INDICATE DIAGRAMATICALLY THE EXTENT, GENERAL CHARACTER AND APPROXIMATE LOCATION OF WORK, WHERE WORK IS INDICATED WITH MINOR DETAILS OMMITED. FURNISH AND INSTALL COMPLETELY, SO AS TO PERFORM THE INTENDED FUNCTION.
2. MOUNTING HEIGHTS FOR ELECTRICAL APPARATUS SHALL BE MEASURED AS FOLLOWS:
   - LIGHTING ..... TO BOTTOM OF FIXTURE
   - WIRING DEVICES ..... TO CENTERLINE OF DEVICE
   - PANELBOARDS ..... AS NOTED ON DRAWINGS (OR SPECIFICATIONS)
3. ALL EQUIPMENT DIMENSIONS ARE NOMINAL AND WILL VARY ACCORDING TO MANUFACTURERS. VERIFY CONDUIT STUB–UP LOCATIONS WITH SHOP DRAWINGS PRIOR TO INSTALLATION.
4. THE GROUNDING SYSTEM INSTALLATION SHALL BE IN STRICT ACCORDANCE WITH THE SPECIFICATIONS AND DRAWINGS, WHERE NOT COVERED BY THESE. THE NATIONAL ELECTRICAL CODE SHALL APPLY.
5. ALL POWER AND LIGHTING CIRCUITS REQUIRE A GREEN GROUNDING CONDUCTOR TO BE RUN IN EACH CONDUIT.
6. ALL ELECTRICAL EQUIPMENT SHALL BE ATTACHED TO SUPPORTING STRUCTURES WITH FASTENERS RATED FOR SEISMIC ZONES 3.
7. ELECTRICAL WORK – COORDINATE INSTALLATION WITH MECHANICAL (DIV. 15) CONTRACTOR (PIPING AND HVAC).
8. ALL WALL MOUNTED EQUIPMENT AND PANELS SHALL NOT BE INSTALLED UNTIL AFTER THE WALLS HAVE BEEN PAINTED.
9. ALL HOT, NEUTRAL, AND GROUND BRANCH CIRCUIT CONDUCTORS IN BEQ BUILDINGS A, B, AND C WILL BE #10 AWG (U.N.O.).

NOTES – CONDUIT SEALS

1. CONDUIT SEALS SHALL BE PROVIDED FOR ALL CONDUITS ENTERING THE BUILDING. SEALS SHALL BE INSTALLED FOR ALL CONDUIT BETWEEN AIR CONDITIONED AND UN–AIR CONDITIONED SPACES AND BETWEEN INDOOR AND OUTDOOR SPACES AS REQUIRED BY NEC ARTICLES 230–8, 300–5(g), 300–7(a).

FIXTURE TAGS

A1 / BC2–34

WHERE: A1 IS THE FIXTURE TYPE, SEE SCHEDULE SHEET ON DWG. ESC–30
BC2–34 IS THE LIGHTING PANEL AND CIRCUIT BREAKER NUMBER

ABBREVIATIONS

A	AMPERES
AC	ALTERNATING CURRENT
AF	AMPERE FRAME SIZE
AFF	ABOVE FINISHED FLOOR
AHU	AIR HANDLING UNIT
AT	AMPERE TRIP, LONG TIME
ANSI	AMERICAN NATIONAL STANDARDS INSTITUTE
ASR	AUTOMATIC SPRINKLER RISER
AWG	AMERICAN WIRE GAUGE
BFF	BELOW FINISHED FLOOR
BLDG.	BUILDING
BMS	BALANCED MAGENTIC SWITCH
C	CONDUIT
CB	CIRCUIT BREAKER
CAT.	CATAGORY
CC	COMMUNITY CENTER
CIRC.	CIRCULATION
CKT.	CIRCUIT
CLF	CURRENT LIMITING FUSE
COL	COLUMN
CT'S	CURRENT TRANSFORMERS
COMP.	COMPRESSOR
COND	CONDENSER
CU	COPPER
CNTR	COUNTER
DIA.	DIAMETER (OUTSIDE)
DWG.	DRAWING
E.F.	EXHAUST FAN
EHH	ELECTRICAL (POWER) HANDHOLE
EMH	ELECTRICAL (POWER) MANHOLE
EP	EXPLOSION PROOF
EQUIP.	EQUIPMENT
F.A.	FIRE ALARM
FACP	FIRE ALARM CONTROL PANEL
FIXT.	FIXTURE
FLA	FULL LOAD AMPS
4W	NUMBER OF WIRES
FT.	FEET (ENGLISH SYSTEM)
FU	FUSE
FVNR	FULL VOLTAGE NONREVERSING
FWE	FURNISHED WITH EQUIPMENT
G	GROUND, GROUNDING
GALV.	GALVANIZED
GFCI	GROUND FAULT CIRCUIT INTERRUPTER
GFE	GOVERNMENT FURNISHED EQUIPMENT
GOV'T	GOVERNMENT
HH	HAND HOLE
HID	HIGH INTENSITY DISCHARGE (LIGHTING)
H.O.A.	HAND–OFF–AUTO SWITCH
HP	HORSEPOWER
HPF	HIGH POWER FACTOR
HPS	HIGH PRESSURE SODIUM
HV	HIGH VOLTAGE
HZ	HERTZ (CYCLE PER SECOND)
I.D.	INSIDE DIAMETER
IN.	INCHES (ENGLISH SYSTEM)
IPE	INDUSTRIAL PLANT EQUIPMENT GOVERNMENT FURNISHED, CONTRACTOR INSTALLED
K	KILO (1000 MULTIPLIER)
KW	KILOWATT
LAN	LOCAL AREA NETWORK
LCP	LOCAL CONTROL PANEL
LED	LIGHT EMITTING DIODE
LTG.	LIGHTING
MAINT.	MAINTENANCE
MECH.	MECHANICAL
MFG.	MANUFACTURER
M.H.	MOUNTING HEIGHT ABOVE FINISHED FLOOR
MW	MICROWAVE
MIN.	MINIMUM
MISC.	MISCELLANEOUS
MTD.	MOUNTED
MV	MILLIVOLT (ONE–ONE THOUSANDTH OF ONE VOLT)
N	NEUTRAL
NA	NOT APPLICABLE
N. C.	NORMALLY CLOSED CONTACT OR SWITCH
N.I.C.	NOT IN CONTRACT
N. O.	NORMALLY OPEN CONTACT OR SWITCH
NOM.	NOMINAL
NTS	NOT TO SCALE
NEMA	NATIONAL ELECTRICAL MANUFACTURERS ASSOCIATION
OC	ON CENTER
OL	MOTOR OVERLOAD PROTECTION
OSHA	OCCUPATIONAL SAFETY AND HEALTH ADMINISTRATION
PE	PHOTO ELECTRIC CELL
PNL	PANEL
PP	POWER PANELBOARD
PR	PAIR
PRI	PRIMARY
PVC	POLYVINYL CHLORIDE
QTY	QUANTITY
RECIRC	RECIRCULATION
REG.	REGULATED
RT	RAIN TIGHT
REFRIG	REFRIGIRATOR
A110	ROOM NUMBER; A = BEQ "A" B = BEQ "B" C = BEQ "C" D = COMMUNITY CENTER E = UTILITY BUILDING
RM	ROOM
SC	SHORT CIRCUIT
SEC.	SECONDARY
1ϕ	SINGLE PHASE
S. F.	SUPPLY FAN
SCHED.	SCHEDULE
SM	SINGLE MODE F. O. CABLE
SP	SERVICE PANELBOARD
SQ.	SQUARE
SUBSTA	SUBSTATION
SS	SURGE SUPRESSORS
SSCB	SOLID STATE CIRCUIT BREAKER
SYM	SYMMETRICAL
TEL. , T	TELEPHONE
3 ϕ	THREE PHASE
THH	TELEPHONE HANDHOLE
THK	THICKNESS
3p	THREE POLES
TMH	TELEPHONE MANHOLE
TX	TRANSFORMER
TYP	TYPICAL
UB	UTILITY BUILDING
UCS	UTILITY CONTROL SYSTEM
UG	UNDERGROUND
U. N. O.	UNLESS NOTED OTHERWISE
UTP	UNSHIELDED TWISTED PAIRS (TEL. OR LAN)
VAR	VOLT AMPERE REACTIVE
V.	VOLTS/VOLTAGE
V. T.	VAPOR TIGHT
W	WIRE
W/	WITH
WH	WATTHOUR METER
WHM	WATT HOUR METER
W. O.	WELDING OUTLET
W. P.	WEATHERPROOF
WT	WEATHER TIGHT

J.A. JONES / JA. JONES — LOCKWOOD GREENE — Consulting • Design • Construction

DSGN C.VEEB | DR R.DAVIS | CHK R. WILLIAMS | SUPV C. CARROS | CH ENGR R. STYRON | SUBMITTED BY (FIRM MEMBER TITLE) V.P. 03-MAY-1999 | DATE | TECHNICAL BRANCH | FPE

DRAWING REVISIONS

Rev.	Description	Prep By	Date	Approvd.
0	FINAL DESIGN SUBMITTAL	G.VEEB	02MAY99	R.STYRON
1	AS NOTED	APL	15JUL99	R.STYRON
2	ISSUE FOR RECORD	BWS	01JUN01	

MCAS BEAUFORT, S.C.

BACHELOR ENLISTED QUARTERS – PHASE IV

ELECTRICAL SYMBOLS LIST

DATE | APPROVED

Naval Facilities Engineering Command — Southern Division — Charleston, South Carolina

RECORD DRAWING DATE

CODE I.D. NO. 80091
DRAWING SIZE: D
SPEC. NO.06–98–0690
CONSTRN. CONTR. NO. N62467–98–D–0690
NAVFAC DRAWING NO. 5364458
SHEET 2 OF 44

EGE–07

DATE | ETD FOR COMMANDER, NAVFAC

$$$$ USERNAME $$$$ $$$$ DATE&TIME $$$$ $$$$ DESIGN FILE NAME $$$$

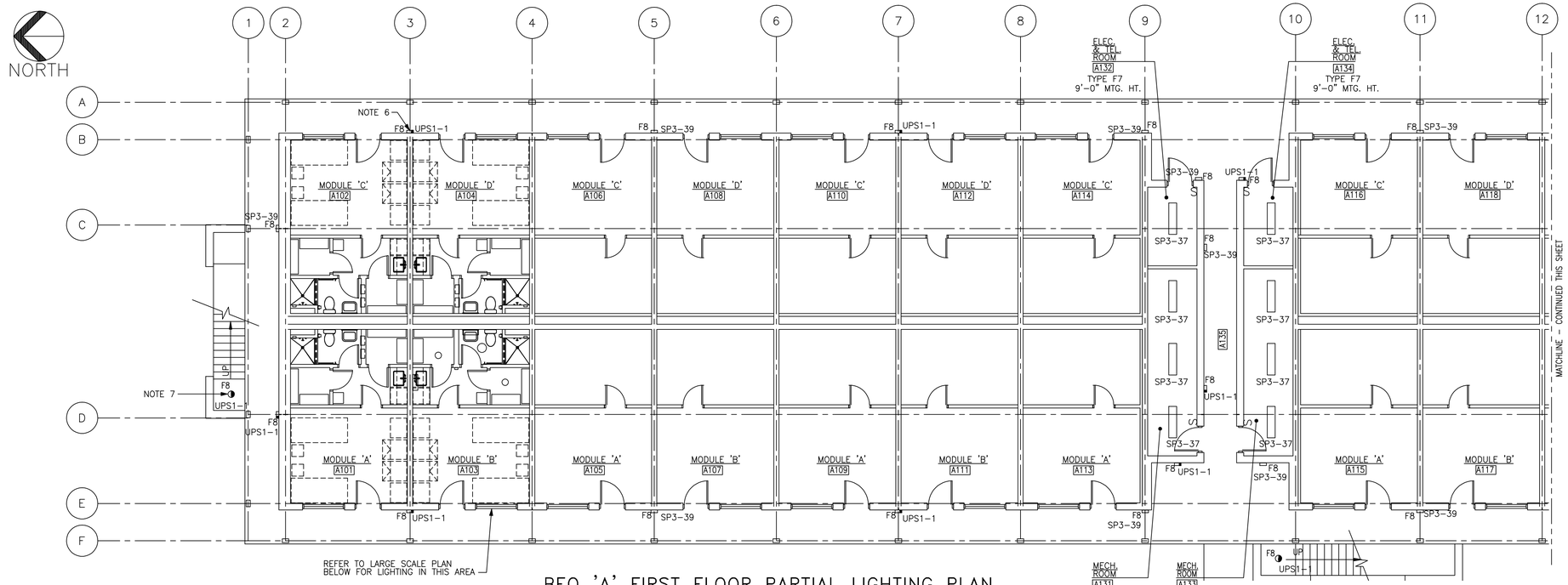

BEQ 'A' FIRST FLOOR PARTIAL LIGHTING PLAN

1/8"=1'-0'

NOTES:

1. FOR LIGHTING FIXTURE SCHEDULE SEE DWG. ESC-30.
2. FOR LIGHTING PANEL SCHEDULES SEE DWGS. ESC-32,33,35 AND 37.
3. WALL MOUNT FIXTURE OVER MIRROR APPROXIMATELY 6'-0" A.F.F.
4. WALL MOUNT FIXTURE UNDER CABINET APPROXIMATELY 1'-6" ABOVE COUNTER HEIGHT.
5. NOT USED.
6. WALL MOUNT FIXTURE APPROXIMATELY 8'-0" A.F.F. (TYPICAL).
7. SURFACE MOUNT FIXTURE UNDER STAIR LANDING (TYPICAL).
8. LIGHT FIXTURES IN THIS TYPICAL MODULE ARE FED FROM PANEL SP1, CIRCUIT NUMBER AS INDICATED. FOR CIRCUITRY IN OTHER MODULES SEE PANEL SCHEDULES DWGS. ESC-32,33,35 AND 37.

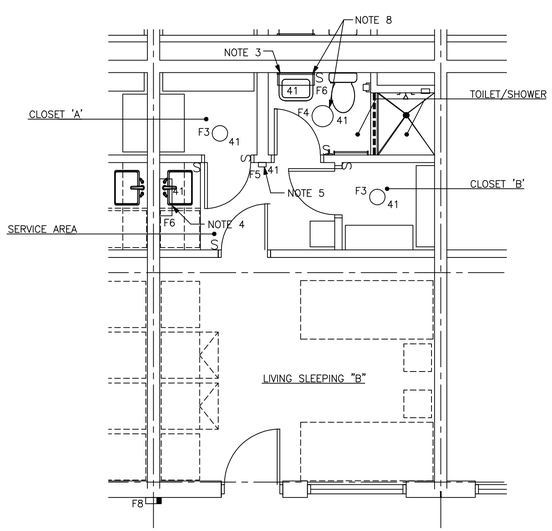

LARGE SCALE LIGHTING PLAN-MODULE 'B'

1/4"=1'-0' NOTE: MODULES 'A', 'C' & 'D' SIMULAR TO 'B'

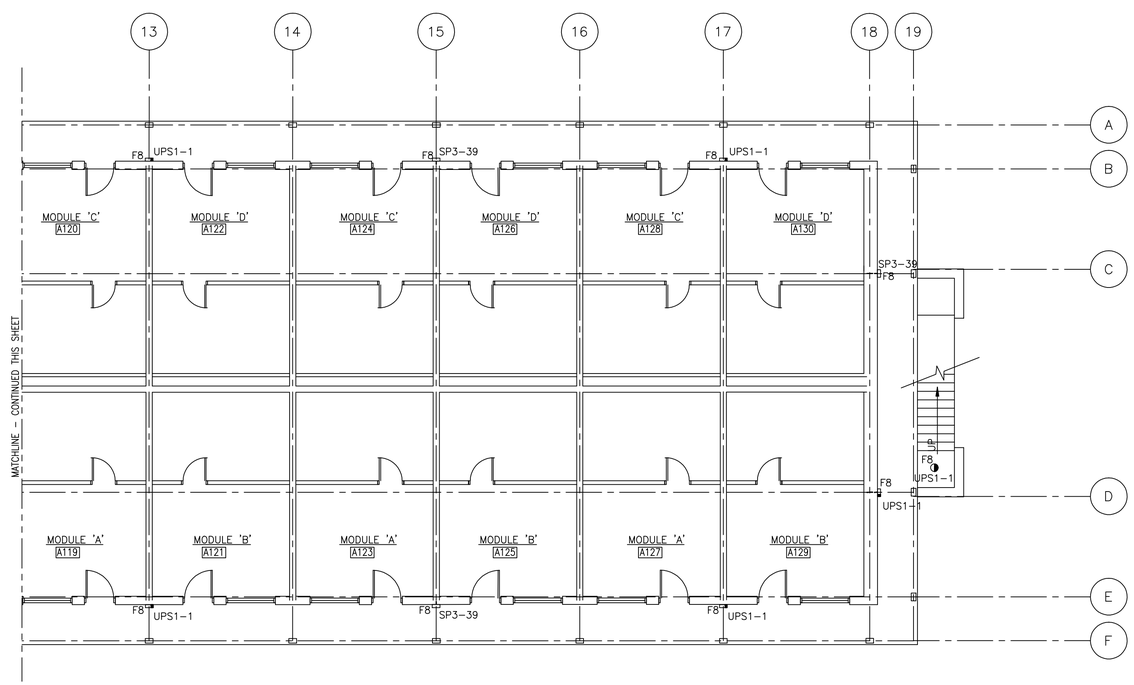

BEQ 'A' FIRST FLOOR PARTIAL LIGHTING PLAN

1/8"=1'-0'

0 4 8 12
1/4"=1'-0"

0 4 8 16 24
1/8"=1'-0"

JA JONES OF THE CAROLINAS
LOCKWOOD GREENE Consulting Design Construction

DSGN	M. ALLEN	DR	B. PRICE
SUPV	C. CARROS	CH ENGR	B. STYRON
CHK	R. WILLIAMS		
SUBMITTED BY (FIRM MANAGER TITLE):			
V.P.		03-MAY-1999	DATE
TECHNICAL BRANCH			
FPE			

DRAWING REVISIONS

Rev.	Description	Prep By	Date	Apprvd.
0	FINAL DESIGN SUBMITTAL	C.WEBB	03MAY99	B.STYRON
1	DELETED F5	APL	15JUL99	B.STYRON
2	ISSUE FOR RECORD	BWS	01JUNE01	

BEAUFORT, S.C.

MCAS BACHELOR ENLISTED QUARTERS - PHASE IV

ELECTRICAL

BEQ "A" FIRST FLOOR LIGHTING PLAN

APPROVED DATE

EFD FOR COMMANDER, NAVFAC

Naval Facilities Engineering Command
Southern Division
Charleston, South Carolina

RECORD DRAWING DATE

CODE I.D. NO. 80091
DRAWING SIZE: D
SPEC. NO.06-98-0690
CONSTRN. CONTR. NO. N62467-98-D-0690
NAVFAC DRAWING NO. 5364459
SHEET 3 OF 44

ELP-10

$$$$ USERNAME $$$$ $$$$ DATE&TIME $$$$ $$$$ DESIGN FILE NAME $$$$

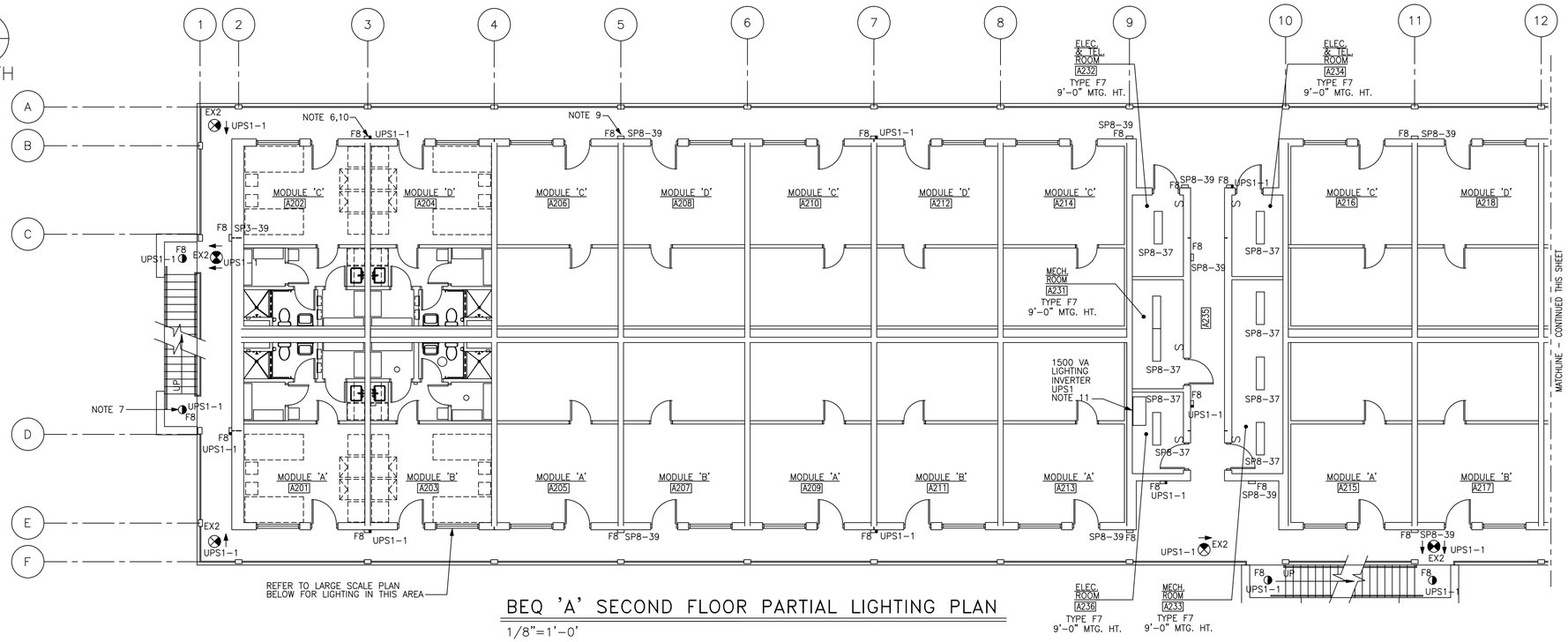

BEQ 'A' SECOND FLOOR PARTIAL LIGHTING PLAN

1/8"=1'-0'

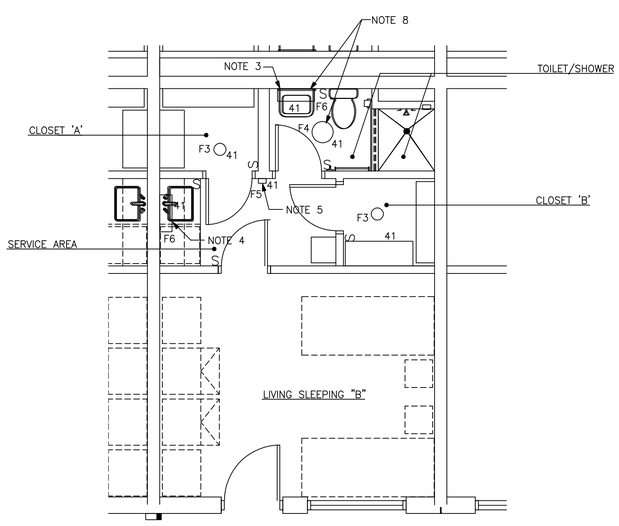

LARGE SCALE LIGHTING PLAN–MODULE 'B'

1/4"=1'-0' NOTE: MODULES 'A', 'C' & 'D' SIMULAR TO 'B'

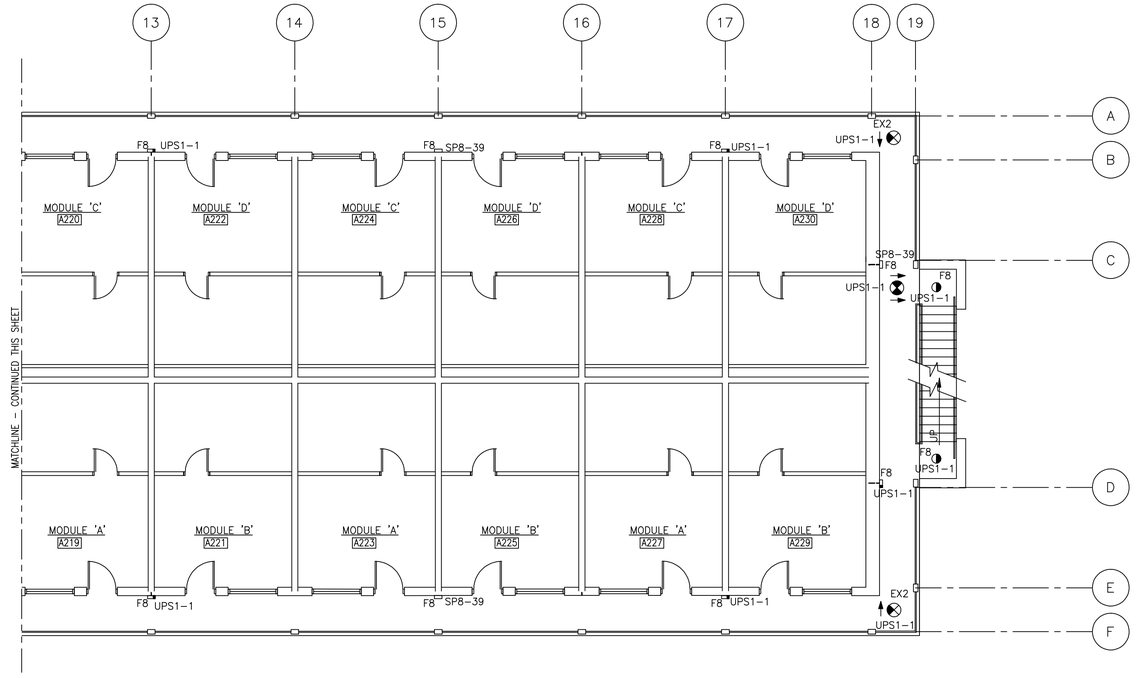

BEQ 'A' SECOND FLOOR PARTIAL LIGHTING PLAN

1/8"=1'-0'

NOTES:

1. FOR LIGHTING FIXTURE SCHEDULE SEE DWG. ESC-30.
2. FOR LIGHTING PANEL SCHEDULES SEE DWG. ESC-32,33,35 AND 37.
3. WALL MOUNT FIXTURE OVER MIRROR APPROXIMATELY 6'-0" A.F.F.
4. WALL MOUNT FIXTURE UNDER CABINET APPROXIMATELY 1'-6" ABOVE COUNTER HEIGHT.
5. NOT USED.
6. WALL MOUNT FIXTURE APPROXIMATELY 8'-0" A.F.F. (TYPICAL).
7. SURFACE MOUNT FIXTURE UNDER STAIR LANDING (TYPICAL).
8. LIGHT FIXTURES IN THIS TYPICAL MODULE ARE FED FROM PANEL SP6, CIRCUIT NUMBER AS INDICATED. FOR CIRCUITRY IN OTHER MODULES SEE PANEL SCHEDULES DWGS. ESC-32,33,35 AND 37.
9. ROUTE BLDG. PERIMETER LIGHTING CIRCUITS SP3-39, SP8-39 AND SP13-39 VIA A 20 AMP 120 VOLT, 3 POLE LIGHTING CONTACTOR WITH A HOA SWITCH IN A NEMA 1 ENCLOSURE MOUNTED ADJACENT TO PANEL SP8. PROVIDE A PHOTOCELL FACING NORTH FOR CONTROL OF THE CONTACTOR.
10. ROUTE BLDG. PERIMETER EMERGENCY LIGHTING CIRCUIT UPS1-1 VIA A 20 AMP 120 VOLT, 2 POLE LIGHTING CONTACTOR WITH A HOA SWITCH IN A NEMA 1 ENCLOSURE MOUNTED ADJACENT TO INVERTER UPS1. PROVIDE A PHOTOCELL FACING NORTH FOR CONTROL OF THE CONTACTOR.
11. THE BLDG LIGHTING INVERTER UPS1 SHALL BE FED FROM PANEL SP8, CIRCUIT 35.

JA JONES ENGINEERING & ARCHITECTURE OF THE CAROLINAS
LOCKWOOD GREENE Consulting Design Construction

DSGN	M. ALLEN	DR	B. PRICE
SUPV	C. CARROS	CH ENGR	B. STYRON
CHK	R. WILLIAMS	CH ENGR	B. STYRON
SUBMITTED BY (FIRM MANAGER TITLE): V.P.		DATE	03-MAY-1999
TECHNICAL BRANCH			
FPE			

DRAWING REVISIONS

Rev.	Description	Prep By	Date	Apprvd.
0	FINAL DESIGN SUBMITTAL	C.WEBB	03MAY99	B.STYRON
1	DELETED F5		15JUL99	B.STYRON
2	ISSUE FOR RECORD	APL	01JUN01	
		BWS		

BEAUFORT, S.C.

MCAS BACHELOR ENLISTED QUARTERS - PHASE IV

ELECTRICAL

BEQ "A" SECOND FLOOR LIGHTING PLAN

APPROVED DATE

EFD FOR COMMANDER, NAVFAC

Naval Facilities Engineering Command
Southern Division
Charleston, South Carolina

RECORD DRAWING DATE

CODE I.D. NO. 80091
DRAWING SIZE: D
SPEC. NO.06-98-0690
CONSTRN. CONTR. NO. N62467-98-D-0690
NAVFAC DRAWING NO. 5364460
SHEET 4 OF 44
ELP-11

0 4 8 12 1/4"=1'-0"

0 4 8 16 24 1/8"=1'-0"

$$$$ USERNAME $$$$ $$$$ DATE&TIME $$$$ $$$$ DESIGN FILE NAME $$$$

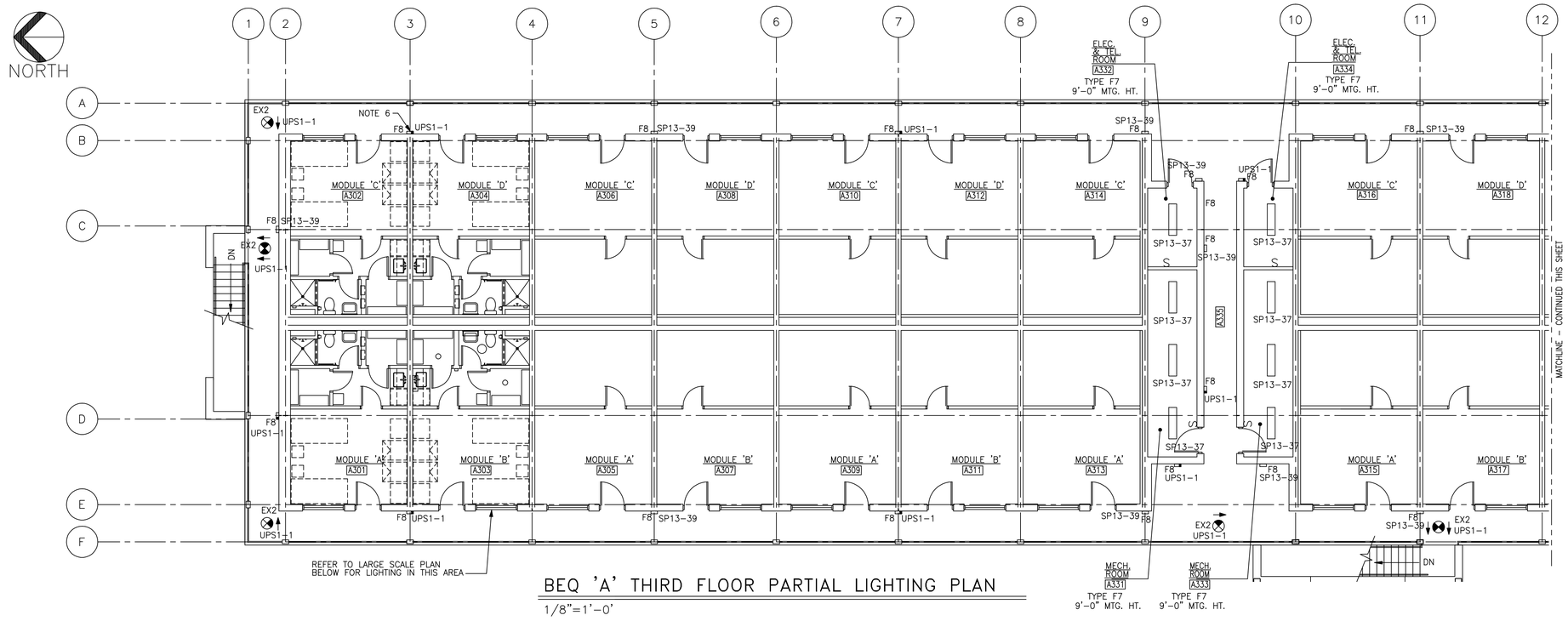

BEQ 'A' THIRD FLOOR PARTIAL LIGHTING PLAN

1/8"=1'-0'

NOTES:

1. FOR LIGHTING FIXTURE SCHEDULE SEE DWG. ESC-30.
2. FOR LIGHTING PANEL SCHEDULES SEE DWG. ESC-32,33,35 AND 37.
3. WALL MOUNT FIXTURE OVER MIRROR APPROXIMATELY 6'-0" A.F.F.
4. WALL MOUNT FIXTURE UNDER CABINET APPROXIMATELY 1'-6" ABOVE COUNTER HEIGHT.
5. NOT USED.
6. WALL MOUNT FIXTURE APPROXIMATELY 8'-0" A.F.F. (TYPICAL).
7. LIGHT FIXTURES IN THIS TYPICAL MODULE ARE FED FROM PANEL SP11, CIRCUIT NUMBER AS INDICATED. FOR CIRCUITRY IN OTHER MODULES SEE PANEL SCHEDULES DWGS. ESC-32,33,35 AND 37.

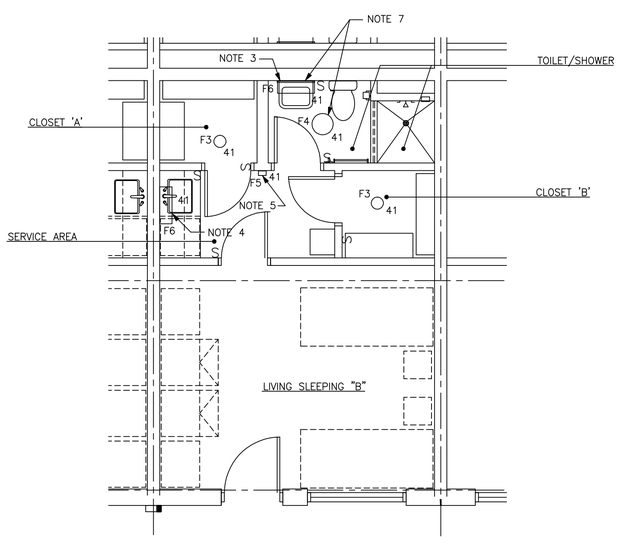

LARGE SCALE LIGHTING PLAN-MODULE 'B'

1/4"=1'-0' NOTE: MODULES 'A', 'C' & 'D' SIMULAR TO 'B'

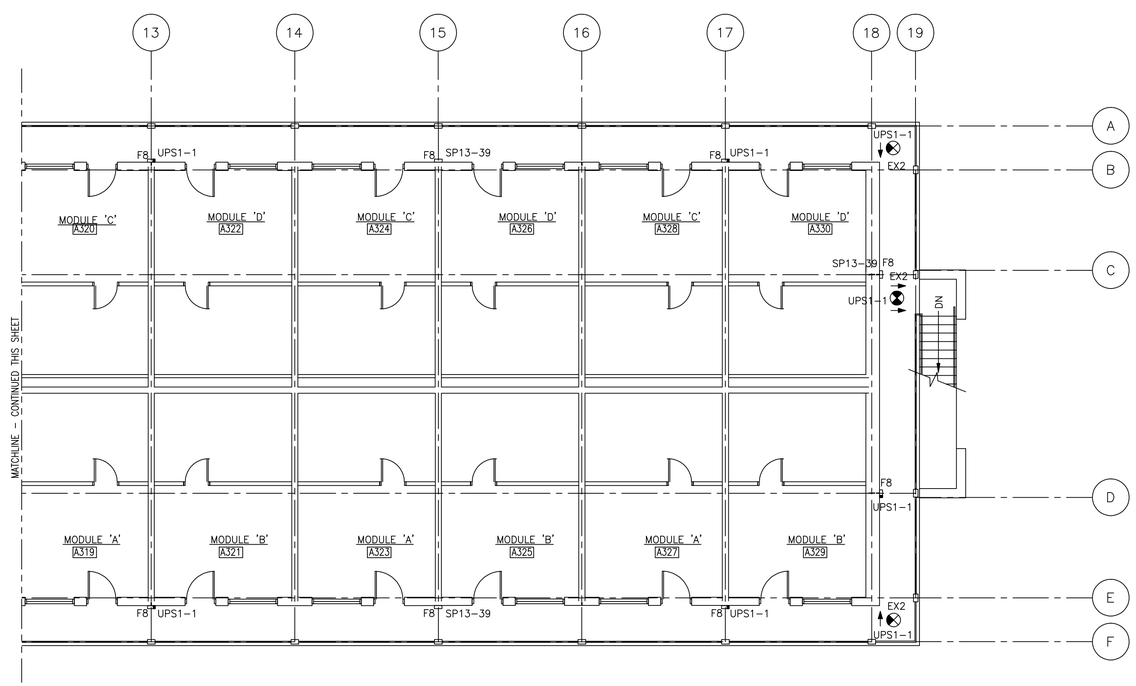

BEQ 'A' THIRD FLOOR PARTIAL LIGHTING PLAN

1/8"=1'-0'

0 4 8 12
1/4"=1'-0"

0 4 8 16 24
1/8"=1'-0"

J.A. JONES MANAGEMENT SERVICES, INC. OF THE CAROLINAS
LOCKWOOD GREENE Consulting Design Construction

DSGN	M. ALLEN	DR	B. PRICE
SUPV	C. CARROS	CH ENGR	B. STYRON
SUBMITTED BY (FIRM MANAGER TITLE):			
TECHNICAL BRANCH			

DRAWING REVISIONS

Rev.	Description	Prep By	Date	Apprvd.
0	FINAL DESIGN SUBMITTAL	M.ALLEN	03MAY99	B.STYRON
1	DELETED F5	APL	15JUL99	B.STYRON
2	ISSUE FOR RECORD	BWS	01JUNE01	

MCAS BEAUFORT, S.C.

BACHELOR ENLISTED QUARTERS - PHASE IV

ELECTRICAL

BEQ "A" THIRD FLOOR LIGHTING PLAN

APPROVED DATE

Naval Facilities Engineering Command
Southern Division
Charleston, South Carolina

RECORD DRAWING DATE

CODE I.D. NO. 80091
DRAWING SIZE: D
SPEC. NO.06-98-0690
CONSTRN. CONTR. NO. N62467-98-D-0690
NAVFAC DRAWING NO. 5364461
SHEET 5 OF 44

ELP-12

EFD FOR COMMANDER, NAVFAC

$$$$ USERNAME $$$$ $$$$ DATE&TIME $$$$ $$$$ DESIGN FILE NAME $$$$

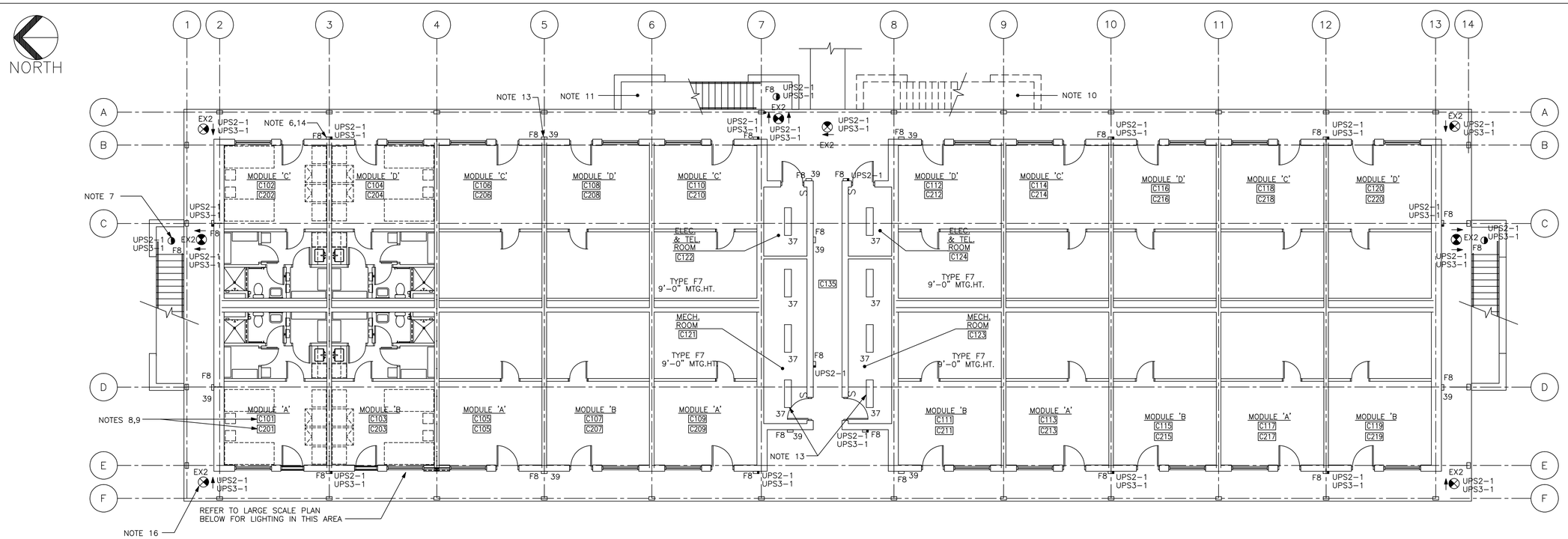

BEQ 'C' FIRST AND SECOND FLOOR LIGHTING PLAN

1/8"=1'-0"

NOTE: BEQ 'B' SIM. W/PLAN DIFFERENCE IN THE LOCATION OF THE STAIR ADJACENT TO THE THE BREEZEWAY.

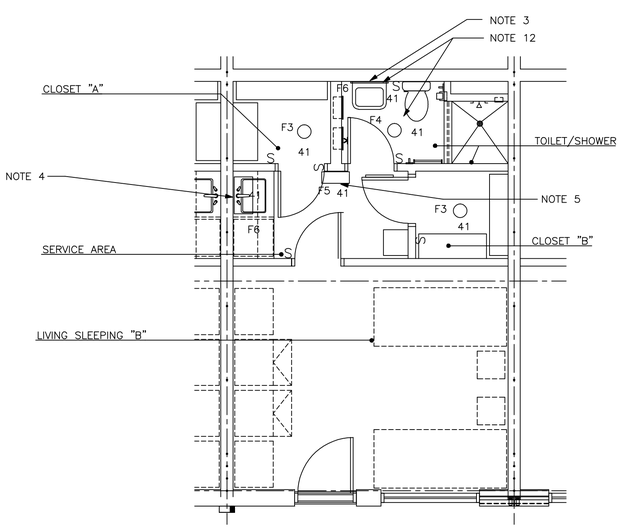

LARGE SCALE LIGHTING PLAN – MODULE 'B'

1/4"=1'-0"

NOTE: MODULES 'A', 'C' & 'D' SIMULAR TO 'B'

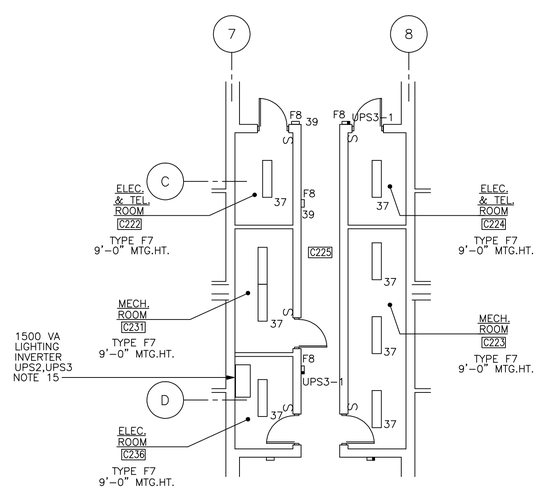

BEQ "C" PARTIAL SECOND FLOOR LIGHTING PLAN

1/8"=1'-0"

NOTE: THIS PLAN IS FOR SECOND FLOOR ONLY OF BEQ "B" AND "C".

NOTES:

1. FOR LIGHTING FIXTURE SCHEDULE SEE DWG. ESC-30.
2. FOR LIGHTING PANEL SCHEDULES SEE DWGS. ESC-32,33,35 AND 37.
3. WALL MOUNT FIXTURE OVER MIRROR APPROXIMATELY 6'-0" A.F.F.
4. WALL MOUNT FIXTURE UNDER CABINET APPROXIMATELY 1'-6" ABOVE COUNTER HEIGHT.
5. NOT USED.
6. WALL MOUNT FIXTURE APPROXIMATELY 8'-0" A.F.F. (TYPICAL).
7. SURFACE MOUNT FIXTURE UNDER STAIR LANDINGS (TYPICAL). 3 TYPE F8 FIXTURES TOTAL EACH STAIRWAY.
8. ROOM NUMBERS FOR BEQ "B" WILL BE THE SAME AS THE ROOM NUMBERS FOR BEQ "C". FOR BEQ"B" REPLACE THE LETTER "C" WITH THE LETTER "B".
9. THE TOP NUMBER IS THE FIRST FLOOR BEQ ROOM NUMBER. THE BOTTOM NUMBER IS THE SECOND FLOOR BEQ ROOM NUMBER.
10. STAIRWELL LOCATION FOR BEQ "B" ONLY.
11. STAIRWELL LOCATION FOR BEQ "C" ONLY.
12. LIGHT FIXTURES IN THIS TYPICAL MODULE FOR BEQ "B" ARE FED FROM PANEL SP16 ON THE FIRST FLOOR AND PANEL SP19 ON THE SECOND FLOOR. FOR BEQ "C" LIGHT FIXTURES ARE FED FROM PANEL SP25 ON THE FIRST FLOOR AND SP28 ON THE SECOND FLOOR, CIRCUIT NUMBERS AS INDICATED. FOR FOR CIRCUITRY IN OTHER MODULES SEE PANEL SCHEDULES DWGS. ESC-32,33,35 AND 37.
13. PERIMETER LIGHT FIXTURES AND LIGHT FIXTURES IN UTILITY ROOMS FOR BEQ "B" ARE FED FROM PANEL SP17 ON THE FIRST FLOOR AND SP20 ON THE SECOND FLOOR. FOR BEQ "C" PERIMETER AND UTILITY ROOM LIGHT FIXTURES ARE FED FROM PANEL SP26 ON THE FIRST FLOOR AND SP29 ON THE SECOND FLOOR, CIRCUIT NUMBERS AS INDICATED.
14. FOR PERIMETER EMERGENCY LIGHTING THE TOP CIRCUIT NUMBER FOR BEQ "B", THE BOTTOM CIRCUIT NUMBER IS FOR BEQ "C". BOTH BEQ "B" AND BEQ "C" EMERGENCY LIGHTING CIRCUITS SHALL BE ROUTED VIA A 20 AMP, 120 VOLT, 2 POLE LIGHTING CONTACTOR WITH A HOA SWITCH IN A NEMA 1 ENCLOSURE MOUNTED ADJACENT TO INVERTER UPS2 IN BEQ "B" AND INVERTER UPS3 IN BEQ "C". PROVIDE EACH CONTACTOR WITH A PHOTOCELL FACING NORTH FOR CONTROL OF THE CONTACTOR.
15. THE BLDG. LIGHTING INVERTER USP2 FOR FOR BEQ "B" SHALL BE FED FROM PANEL SP20, CIRCUIT 35. FOR BEQ "C" THE LIGHTING INVERTER UPS3 SHALL BE FED FROM PANEL SP29, CIRCUIT 35.
16. EXIT SIGNS SHOWN ARE FOR SECOND FLOOR ONLY. NO EXIT SIGNS ARE REQUIRED FOR THE FIRST FLOOR.
17. NO EXPOSED CONDUITS IN MODULES.

0 4 8 12
1/4"=1'-0"

0 4 8 16 24
1/8"=1'-0"

J.A. JONES MANAGEMENT SERVICES, INC. / J.A. JONES OF THE CAROLINAS
LOCKWOOD GREENE Consulting Design Construction

DSGN M. ALLEN	DR R. DAVIS	CHK R. WILLIAMS	
SUPV C. CARROS	CH ENGR B. STYRON		
SUBMITTED BY (FIRM MANAGER TITLE): V.P.		DATE 03-MAY-1999	
TECHNICAL BRANCH			
FPE			

DRAWING REVISIONS

Rev.	Description	Prep By	Date	Apprvd.
0	FINAL DESIGN SUBMITTAL	M.ALLEN	02MAY99	B.STYRON
1	DELETED F5	APL	15JUL99	B.STYRON
2	ISSUE FOR RECORD	BWS	01JUN01	

BEAUFORT, S.C.

MCAS

BACHELOR ENLISTED QUARTERS - PHASE IV

ELECTRICAL

BEQ 'B' & 'C' FIRST AND SECOND FLOOR LIGHTING PLAN

APPROVED DATE

Naval Facilities Engineering Command
Southern Division
Charleston, South Carolina

RECORD DRAWING DATE

CODE I.D. NO. 80091

DRAWING SIZE: D

SPEC. NO.06-98-0690

CONSTRN. CONTR. NO. N62467-98-D-0690

NAVFAC DRAWING NO. 5364462

SHEET 6 OF 44

ELP-13

EFD FOR COMMANDER, NAVFAC

DATE

$$$$ USERNAME $$$$ $$$$ DATE&TIME $$$$ $$$$ DESIGN FILE NAME $$$$

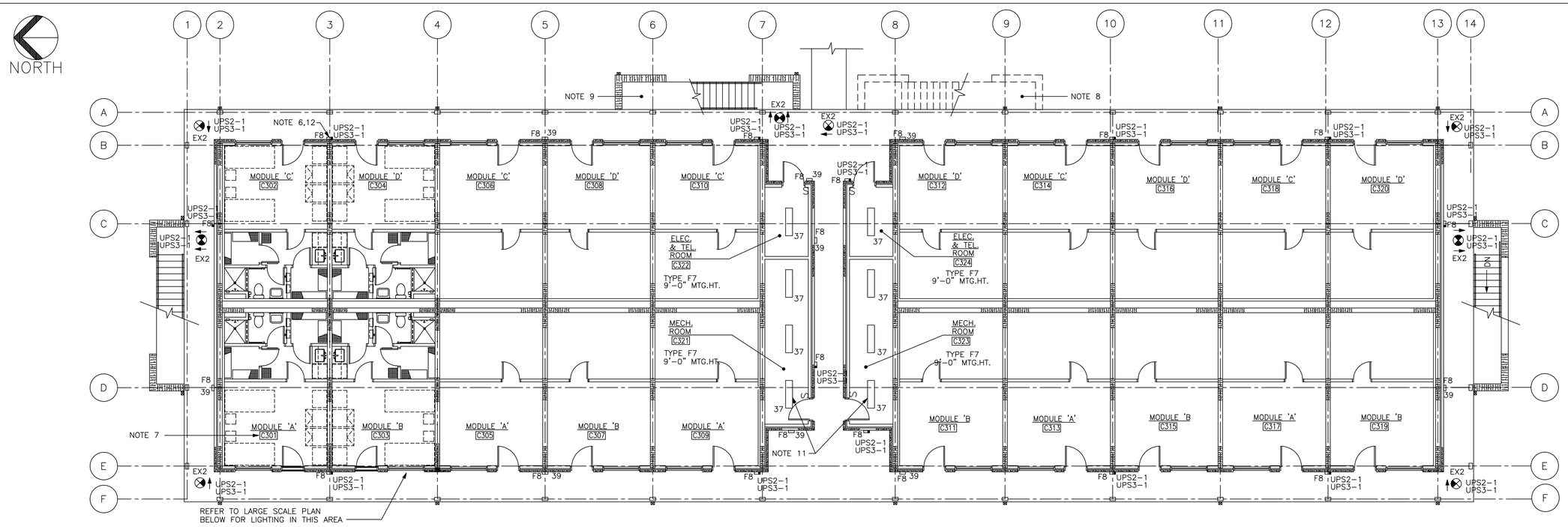

BEQ 'C' THIRD FLOOR LIGHTING PLAN

1/8"=1'-0"

NOTE: BEQ 'B' SIM. W/PLAN DIFFERENCE IN THE LOCATION OF THE STAIR ADJACENT TO THE THE BREEZEWAY.

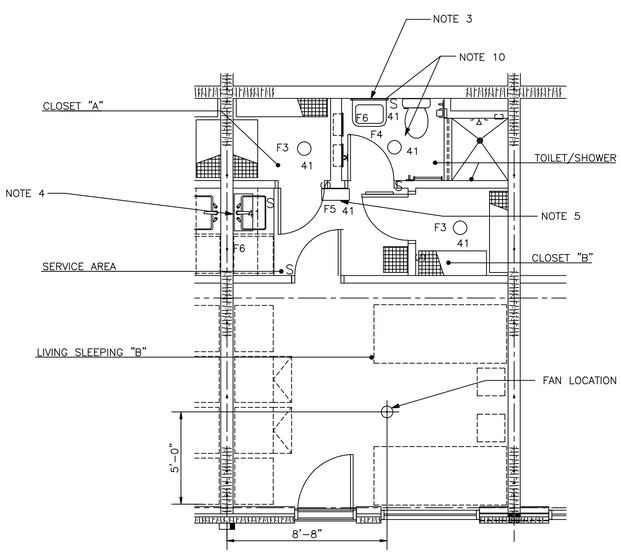

LARGE SCALE LIGHTING PLAN – MODULE 'B'

1/4"=1'-0"

NOTE: MODULES 'A', 'C' & 'D' SIMULAR TO 'B'

NOTES:

1. FOR LIGHTING FIXTURE SCHEDULE SEE DWG. ESC-30.
2. FOR LIGHTING PANEL SCHEDULES SEE DWGS. ESC-32,33,35 AND 37.
3. WALL MOUNT FIXTURE OVER MIRROR APPROXIMATELY 6'-0" A.F.F.
4. WALL MOUNT FIXTURE UNDER CABINET APPROXIMATELY 1'-6" ABOVE COUNTER HEIGHT.
5. NOT USED.
6. WALL MOUNT FIXTURE APPROXIMATELY 8'-0" A.F.F. (TYPICAL).
7. ROOM NUMBERS FOR BEQ "B" WILL BE THE SAME AS THE ROOM NUMBERS FOR BEQ "C". FOR BEQ "B" REPLACE THE LETTER "C" WITH THE LETTER "B".
8. STAIRWELL LOCATION FOR BEQ "B" ONLY.
9. STAIRWELL LOCATION FOR BEQ "C" ONLY.
10. LIGHT FIXTURES IN THIS TYPICAL MODULE FOR BEQ "B" ARE FED FROM PANEL SP22. FOR BEQ "C" LIGHT FIXTURES ARE FED FROM PANEL SP31, CIRCUIT NUMBER AS INDICATED. FOR CIRCUITRY IN OTHER MODULES SEE DWGS. ESC-32,33,35 AND 37.
11. PERIMETER LIGHT FIXTURES AND LIGHT FIXTURES IN UTILITY ROOMS FOR BEQ "B" ARE FED FROM PANEL SP23. FOR BEQ "C" PERIMETER AND UTILITY ROOM LIGHT FIXTURES ARE FED FROM PANEL SP32, CIRCUIT NUMBERS AS INDICATED.
12. THE TOP CIRCUIT NUMBER FOR PERIMETER EMERGENCY LIGHTING IS FOR BEQ "B". THE BOTTOM CIRCUIT NUMBER IS FOR BEQ "C".
13. NO EXPOSED CONDUITS IN MODULES.

0 4 8 12
1/4"=1'-0"

0 4 8 16 24
1/8"=1'-0"

J.A. JONES MANAGEMENT SERVICES, INC. / J.A. JONES OF THE CAROLINAS
LOCKWOOD GREENE Consulting Design Construction

DESIGN	M. ALLEN	DR	B. PRICE
SUPV	C. CARROS	CH ENGR	B. STRON
SUBMITTED BY (FIRM MANAGER TITLE):			
TECHNICAL BRANCH			

DRAWING REVISIONS

Rev.	Description	Prep By	Date	Apprvd.
0	FINAL DESIGN SUBMITTAL	M.ALLEN	02MAY99	B.STRON
1	DELETED F5		15JUL99	B.STRON
2	ISSUE FOR RECORD	APL	01JUNE01	BWS

BEAUFORT, S.C.

MCAS

BACHELOR ENLISTED QUARTERS - PHASE IV

ELECTRICAL

BEQ 'B' & 'C' THIRD FLOOR LIGHTING PLAN

DATE

APPROVED

Naval Facilities Engineering Command
Southern Division
Charleston, South Carolina

EFD FOR COMMANDER, NAVFAC

RECORD DRAWING DATE

CODE I.D. NO. 80091

DRAWING SIZE: D

SPEC. NO.06-98-0690

CONSTRN. CONTR. NO. N62467-98-D-0690

NAVFAC DRAWING NO. 5364463

SHEET 7 OF 44

ELP-14

$$$$ USERNAME $$$$ $$$$ DATE&TIME $$$$ $$$$ DESIGN FILE NAME $$$$

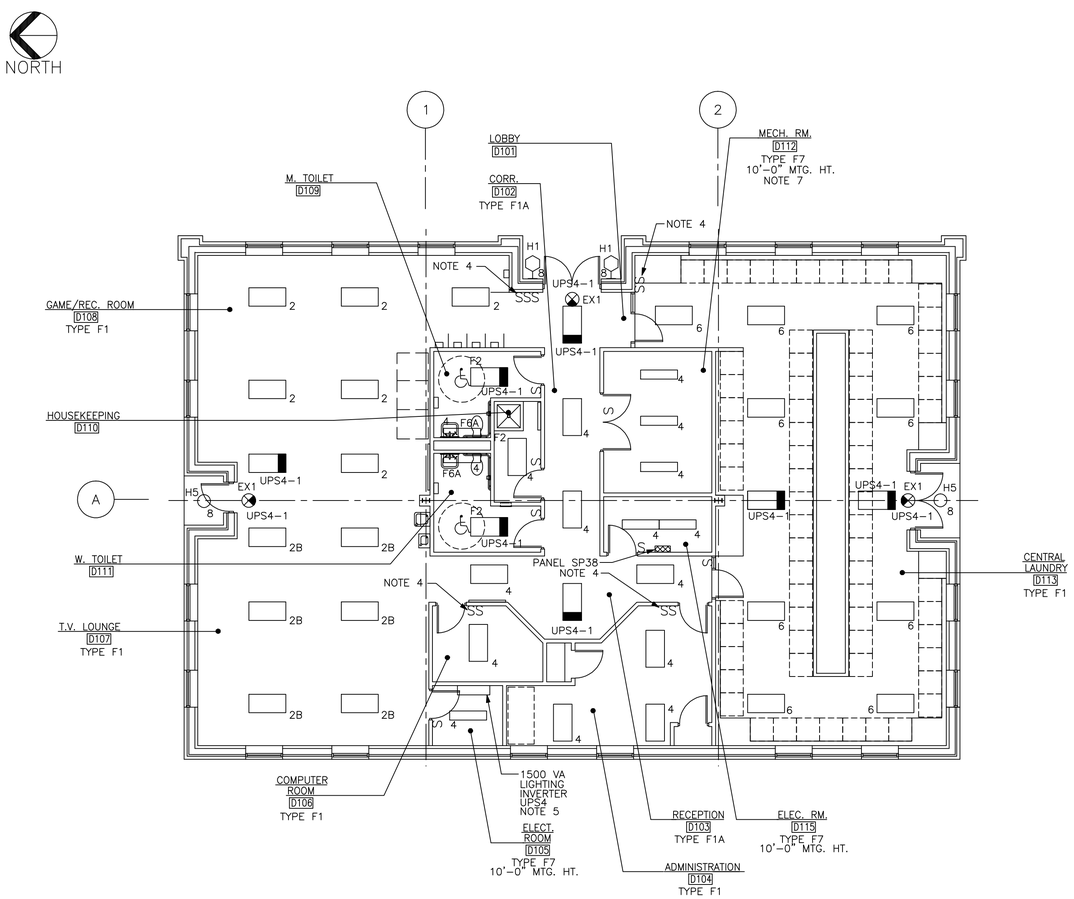

COMMUNITY CENTER LIGHTING PLAN

1/8"=1'-0'

NOTES:

1. FOR LIGHTING FIXTURE SCHEDULE SEE DWG. ESC-30.
2. FOR LIGHTING PANEL SCHEDULE SEE DWG. ESC-38.
3. ALL LIGHT FIXTURES SHALL BE FED FROM PANEL SP38, CIRCUIT NUMBER AS INDICATED, UNLESS NOTED OTHERWISE.
4. GAME/REC., TV LOUNGE, COMPUTER, ADMINISTRATION AND CENTRAL LAUNDRY ROOMS SHALL BE DUAL-SWITCHED. ONE SWITCH SHALL CONTROL 2 LAMPS AND ONE SWITCH SHALL CONTROL THE OTHER 2 LAMPS OF EACH 4 LAMP FIXTURE.
5. BUILDING LIGHTING INVERTER UPS4 SHALL BE FED FROM PANEL SP38, CIRCUIT 10.
6. BUILDING EXTERIOR LIGHTING CIRCUIT SP38-8 SHALL BE ROUTED VIA A 20 AMP, 120 VOLT, 2 POLE LIGHTING CONTACTOR WITH A HOA SWITCH IN A NEMA 1 ENCLOSURE MOUNTED ADJACENT TO PANEL SP38. PROVIDE A PHOTOCELL FACING NORTH FOR CONTROL OF THE CONTACTOR.
7. ARRANGE LIGHTING TO AVOID MECHANICAL ITEMS IN THIE ROOM.

0 4 8 16 24
1/8"=1'-0"

JA JONES OF THE CAROLINAS
LOCKWOOD GREENE
Consulting Design-Construction

DSGN M. ALLEN	DR B. PRICE	CHK R. WILLIAMS	
SUPV C. CARROS	CH ENGR B. STYRON		
SUBMITTED BY (FIRM MANAGER TITLE): V.P.		03-MAY-1999	DATE
TECHNICAL BRANCH			
FPE			

DRAWING REVISIONS

Rev.	Description	Prep By	Date	Apprvd.
0	FINAL DESIGN SUBMITTAL	M.ALLEN	03MAY99	B.STYRON
1	REV. FIXTURE TYPE	APL	15JUL99	B.STYRON
2	ISSUE FOR RECORD	BWS	01JUNE01	

MCAS
BEAUFORT, S.C.
BACHELOR ENLISTED QUARTERS - PHASE IV
ELECTRICAL
COMMUNITY CENTER LIGHTING PLAN
APPROVED
DATE

Naval Facilities Engineering Command
Southern Division
Charleston, South Carolina

RECORD DRAWING DATE

CODE I.D. NO. 80091
DRAWING SIZE: D
SPEC. NO.06-98-0690
CONSTRN. CONTR. NO. N62467-98-D-0690
NAVFAC DRAWING NO. 5364464
SHEET 8 OF 44
ELP-15

EFD FOR COMMANDER, NAVFAC

$$$$ USERNAME $$$$ $$$$ DATE&TIME $$$$ $$$$ DESIGN FILE NAME $$$$

NORTH

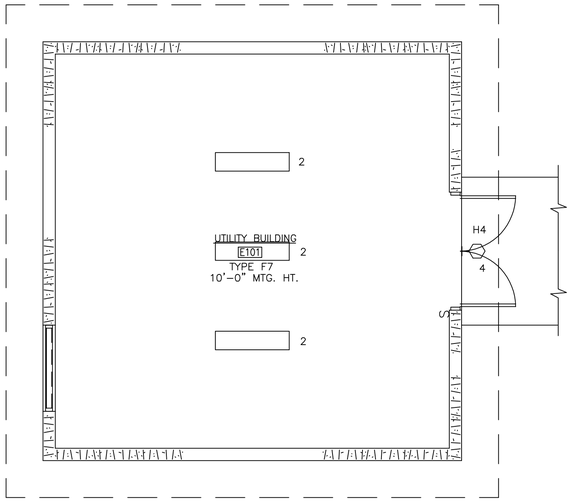

UTILITY BUILDING LIGHTING PLAN

1/4"=1'-0"

NOTES:

1. FOR LIGHTING FIXTURE SCHEDULE SEE DWG. ESC-30.
2. ALL LIGHT FIXTURES SHALL BE FED FROM PANEL SP39, CIRCUIT NUMBER AS INDICATED. SEE SCHEDULE ON DWG. EPP-26.

0 4 8 12
1/4"=1'-0"

J.A. JONES MANAGEMENT SERVICES, INC. — J.A. JONES OF THE CAROLINAS — LOCKWOOD GREENE Consulting Design Construction

DESIGN	M. ALLEN	DR	B. PRICE	CHK	R. WILLIAMS
SUPV	C. CARROS	CH ENGR	B. STYRON
SUBMITTED BY (FIRM MANAGER TITLE)	V.P.	DATE 03-MAY-1999
TECHNICAL BRANCH	
FPE	

DRAWING REVISIONS

Rev.	Description	Prep By	Date	Apprvd.
0	FINAL DESIGN SUBMITTAL	M.ALLEN	03MAY99	B.STYRON
1	ISSUE FOR RECORD	BWS	01JUNE01	

MCAS BEAUFORT, S.C.

BACHELOR ENLISTED QUARTERS - PHASE IV

ELECTRICAL

UTILITY BUILDING LIGHTING PLAN

APPROVED DATE

Naval Facilities Engineering Command
Southern Division
Charleston, South Carolina

RECORD DRAWING DATE

CODE I.D. NO. 80091
DRAWING SIZE: D
SPEC. NO.06-98-0690
CONSTRN. CONTR. NO. N62467-98-D-0690
NAVFAC DRAWING NO. 5364465
SHEET 9 OF 44

ELP-16

EFD FOR COMMANDER, NAVFAC

$$$$ USERNAME $$$$ $$$$ DATE&TIME $$$$ $$$$ DESIGN FILE NAME $$$$

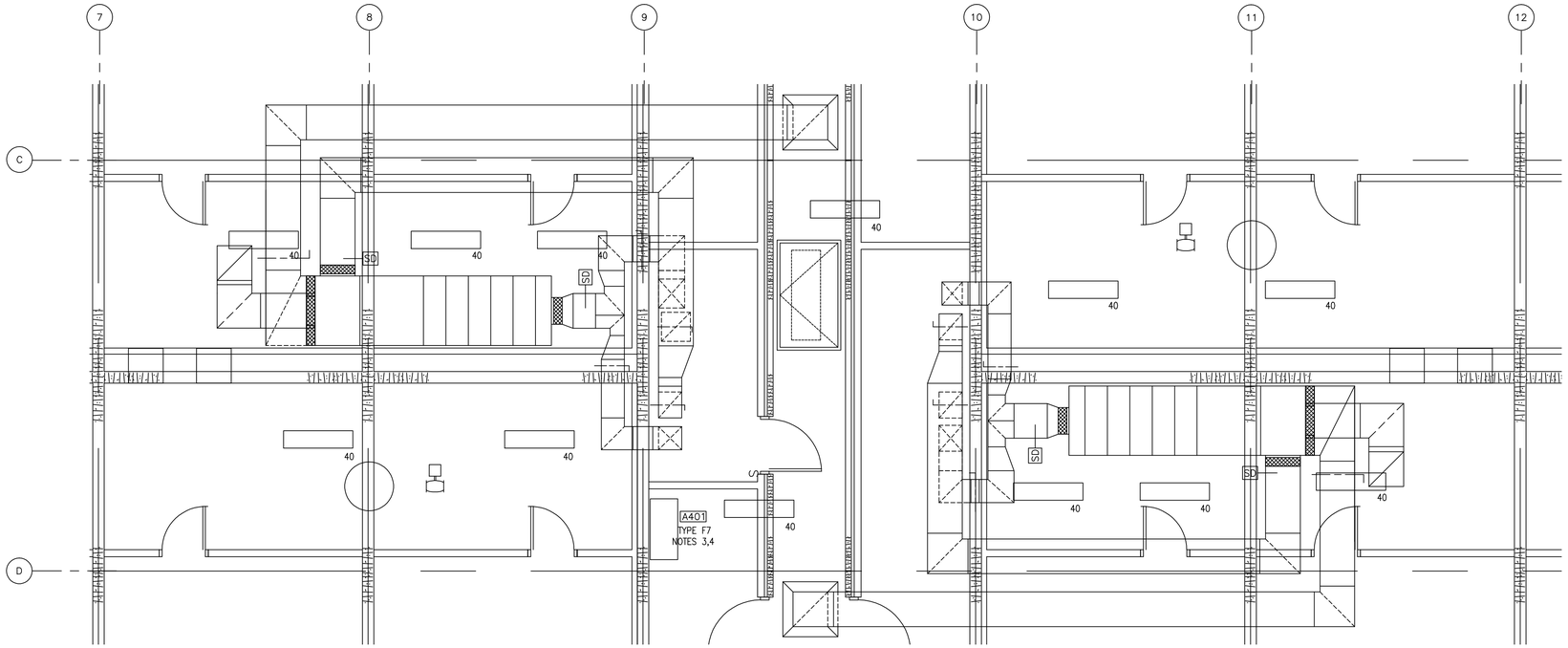

BEQ "A" ATTIC LIGHTING PLAN

1/4"=1'-0"

NORTH

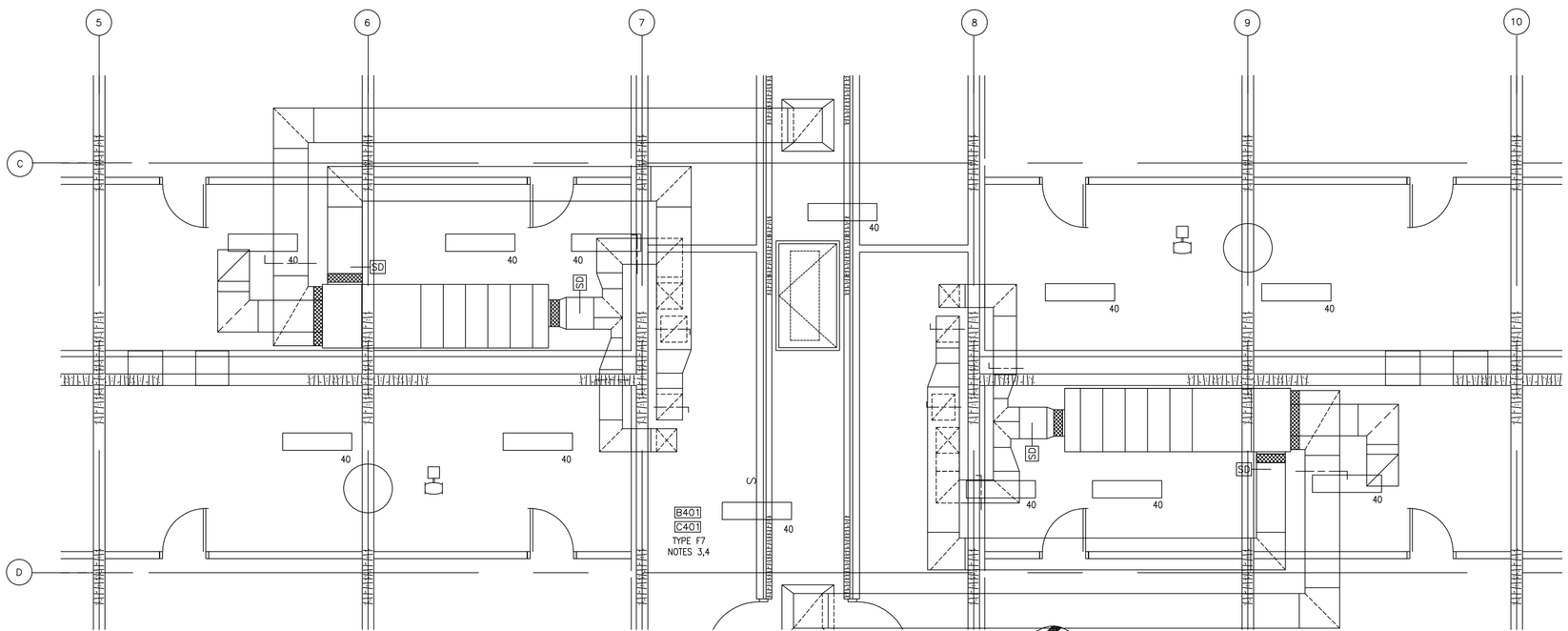

BEQ "B" & "C" ATTIC LIGHTING PLAN

1/4"=1'-0"

NORTH

NOTES:

1. FOR LIGHTING FIXTURE SCHEDULE SEE DWG. ESC-30.
2. FOR LIGHTING PANEL SCHEDULES SEE DWGS. ESC-32,33,35 AND 37.
3. MOUNT FIXTURES AS HIGH AS POSSIBLE IN ATTIC SPACE. MOUNTING HEIGHTS WILL VARY.
4. MECHANICAL ROOM LIGHT FIXTURES IN BEQ "A" SHALL BE FED FROM PANEL SP13, BEQ "B" SHALL BE FED FROM PANEL SP23, BEQ "C" SHALL BE FED FROM PANEL SP32, CIRCUIT NUMBERS AS INDICATED.

0 4 8 12

1/4"=1'-0"

J.A. JONES DESIGNERS ENGINEERS ARCHITECTS

J.A. JONES OF THE CAROLINAS

LOCKWOOD GREENE Consulting•Design•Construction

DSGN M. ALLEN	DR B. PRICE	CHK R. WILLIAMS	
SUPV C. CARROS	CH ENGR B. STYRON		
SUBMITTED BY (FIRM MEMBER TITLE): V.P.			DATE 03-MAY-1999
TECHNICAL BRANCH			
FPE			

DRAWING REVISIONS

Rev.	Description	Prep By	Date	Approvd.
0	FINAL DESIGN SUBMITTAL	M.ALLEN	03MAY99	B.STYRON
1	ISSUE FOR RECORD	BWS	01JUN03	

MCAS BEAUFORT, S.C.

BACHELOR ENLISTED QUARTERS - PHASE IV

ELECTRICAL

BEQ "A", "B" & "C" ATTIC LIGHTING PLANS

APPROVED DATE

Naval Facilities Engineering Command

Southern Division

Charleston, South Carolina

RECORD DRAWING DATE

CODE I.D. NO. 80091

DRAWING SIZE: D

SPEC. NO.06-98-0690

CONSTRN. CONTR. NO. N62467-98-D-0690

NAVFAC DRAWING NO. 5364466

SHEET 10 OF 44

ELP-17

ETD FOR COMMANDER, NAVFAC

$$$$ USERNAME $$$$ $$$$ DATE&TIME $$$$ $$$$ DESIGN FILE NAME $$$$

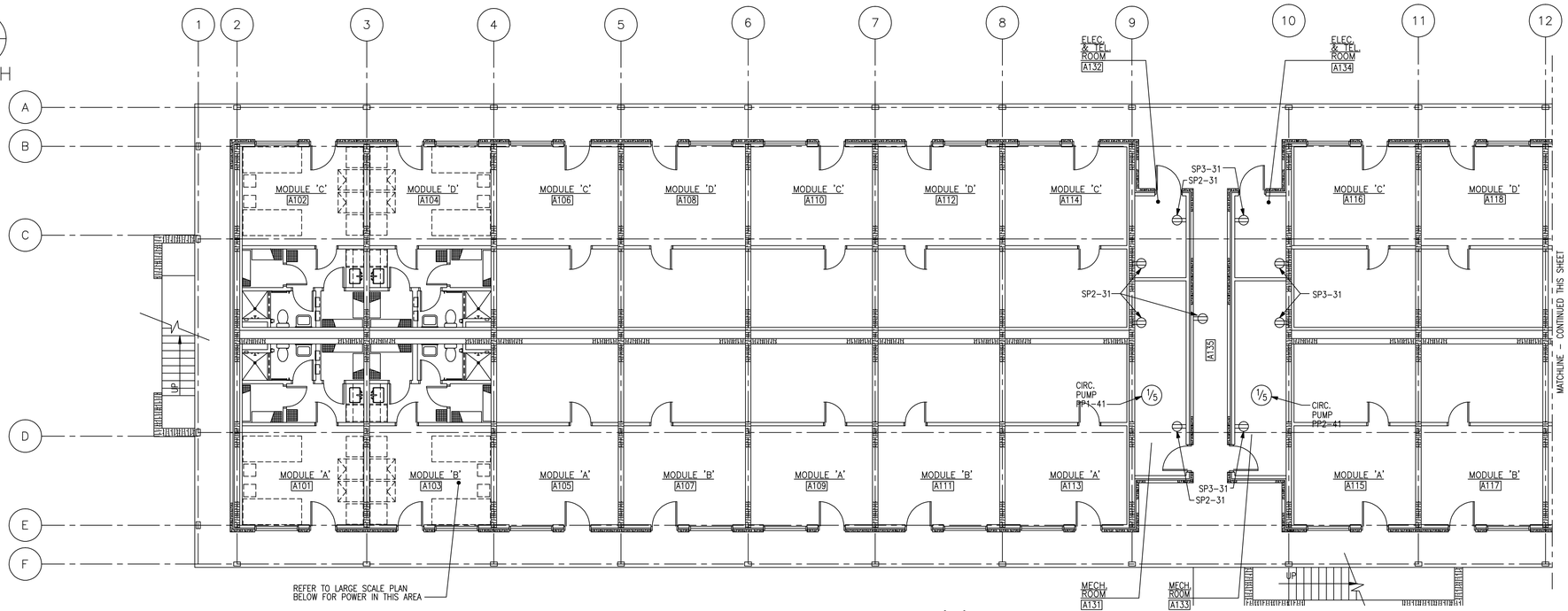

FIRST FLOOR POWER PLAN @ BEQ 'A'

1/8"=1'-0'

NOTES:

1. SWITCH BOTTOM HALF OF OUTLET ONLY, TOP HALF ALWAYS HOT.
2. CIRCUITS SHOWN ARE FOR ROOM A103. SEE POWER PLAN FOR EXACT ROOM NUMBERS.
3. CEILING FAN WITH WHITE HOUSING AND 52" WHITE COLORED BLADES, LASKO CAT. NO. 3185, OR APPROVED EQUAL. USE A REMOTELY WIRED HEAVY DUTY 4 POSITION (3 SPEEDS AND "OFF" AND LIGHT ON & OFF POSITION) SPEED CONTROLLER. LIGHT TO BE 1-60 WATT INCANDESCENT WHITE GLOBE LIGHT KIT. NO CORDS ON FAN.
4. NO EXPOSED CONDUITS IN MODULES.

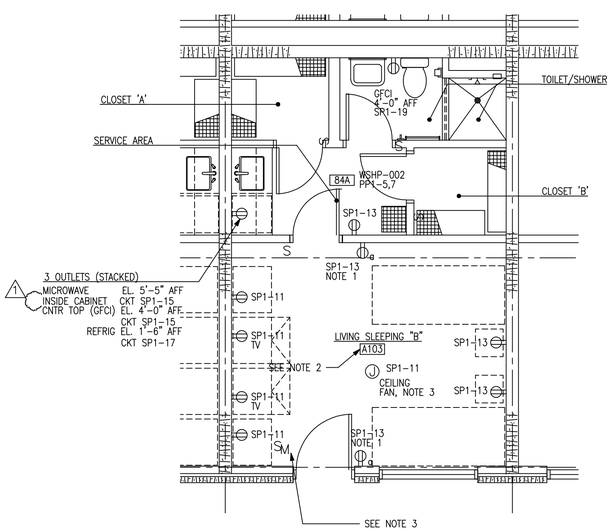

LARGE SCALE POWER PLAN-MODULE 'B'

1/4"=1'-0' NOTE: MODULES 'A', 'C' & 'D' SIMULAR TO 'B'

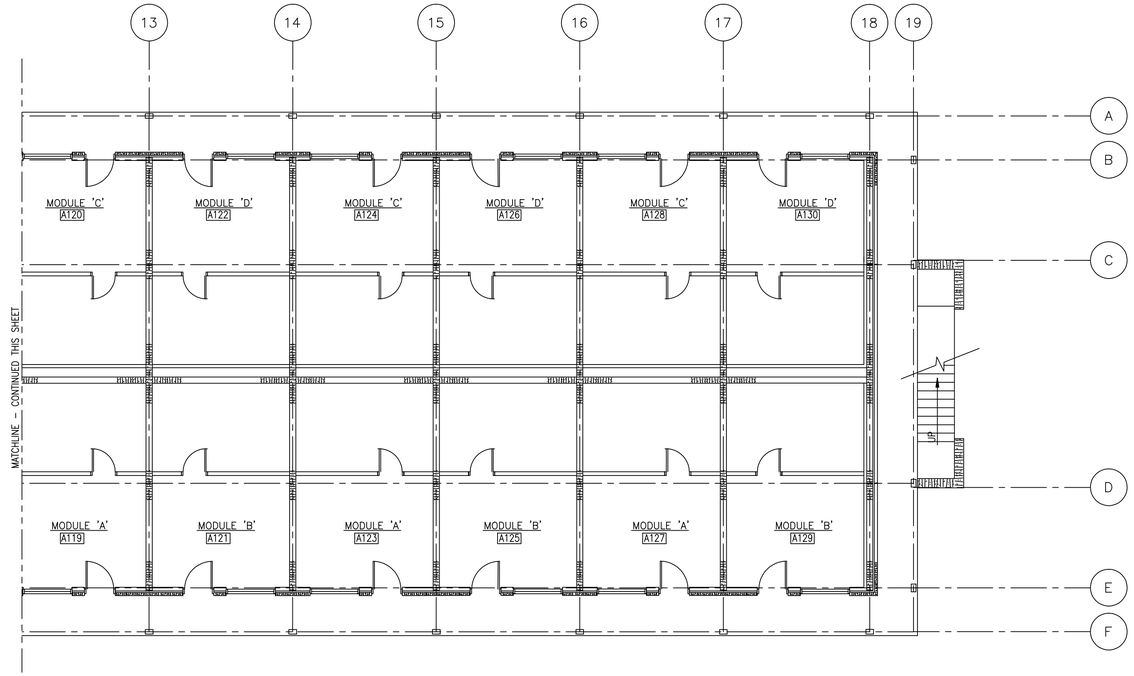

FIRST FLOOR POWER PLAN @ BEQ 'A'

1/8"=1'-0'

0 4 8 12
1/4"=1'-0"

0 4 8 16 24
1/8"=1'-0"

J.A. JONES MANAGEMENT SERVICES, INC. OF THE CAROLINAS
LOCKWOOD GREENE Consulting Design Construction

DSGN B. PAYNE	DR B. PRICE	CHK B. STYRON	
SUPV C. CARROS		CH ENGR B. STYRON	
SUBMITTED BY (FIRM MANAGER TITLE): V.P.			03-MAY-1999 DATE
TECHNICAL BRANCH			
			FPE

DRAWING REVISIONS

Rev.	Description	Prep By	Date	Apprvd.
0	FINAL DESIGN SUBMITTAL	B.PAYNE	03MAY99	B.STYRON
1	AS NOTED	APL	15JUL99	B.STYRON
2	ISSUE FOR RECORD	BWS	01JUNE01	

MCAS BEAUFORT, S.C.

BACHELOR ENLISTED QUARTERS - PHASE IV

ELECTRICAL

BEQ 'A' FIRST FLOOR POWER PLAN

APPROVED DATE

EFD FOR COMMANDER, NAVFAC

Naval Facilities Engineering Command
Southern Division
Charleston, South Carolina

RECORD DRAWING DATE

CODE I.D. NO. 80091
DRAWING SIZE: D
SPEC. NO.06-98-0690
CONSTRN. CONTR. NO. N62467-98-D-0690
NAVFAC DRAWING NO. 5364467
SHEET 11 OF 44

EPP-20

$$$$ USERNAME $$$$ $$$$ DATE&TIME $$$$ $$$$ DESIGN FILE NAME $$$$

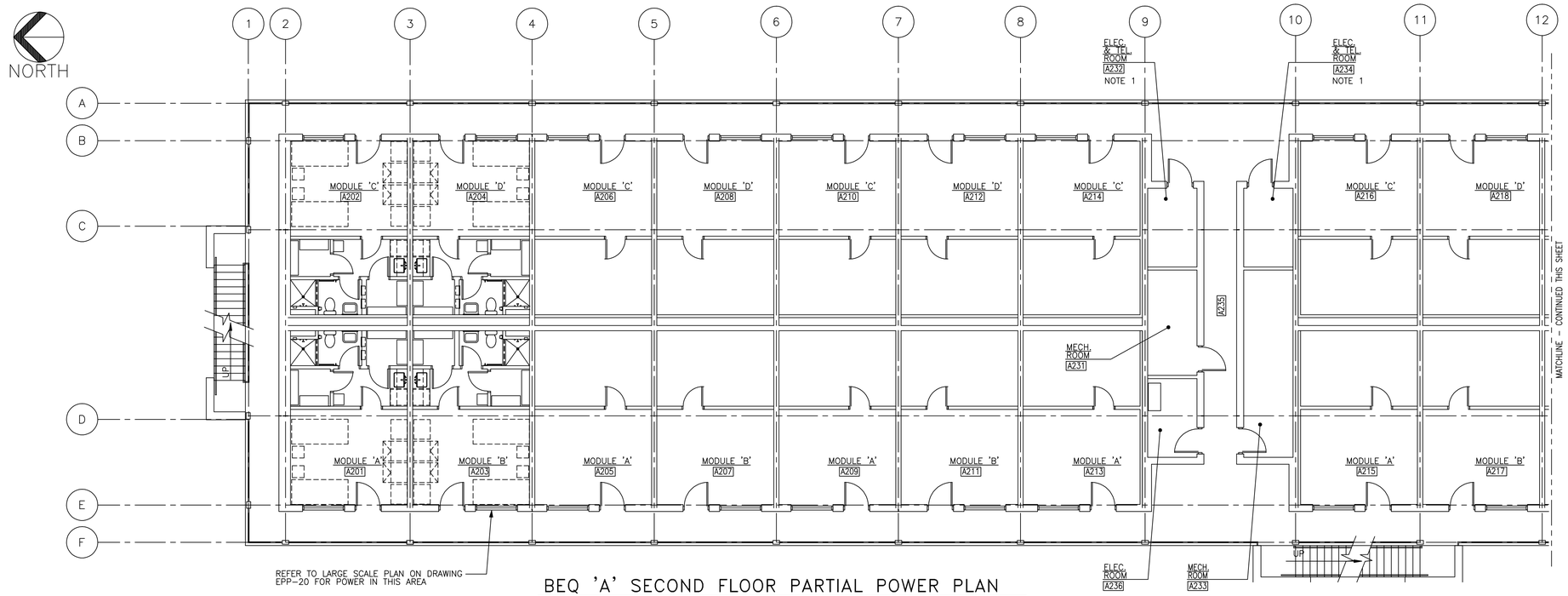

BEQ 'A' SECOND FLOOR PARTIAL POWER PLAN

1/8"=1'-0'

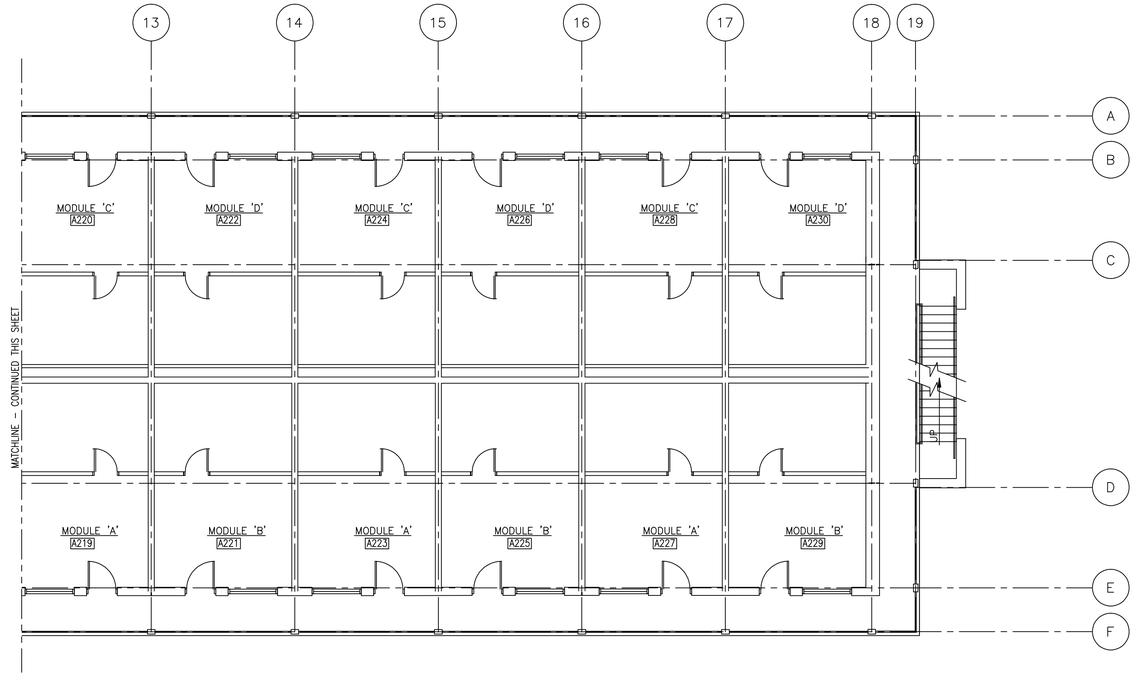

BEQ 'A' SECOND FLOOR PARTIAL POWER PLAN

1/8"=1'-0'

NOTES

1. FOR LAYOUT OF ELECTRICAL EQUIPMENT AND RECEPTACLES IN THIS AREA SEE DRAWINGS EPP-20 AND EXX-03.

0 4 8 16 24

1/8"=1'-0"

J.A. JONES MANAGEMENT SERVICES, INC. OF THE CAROLINAS

LOCKWOOD GREENE Consulting Design Construction

DSGN B. PAYNE	DR B. PRICE	CHK B. STYRON	
SUPV C. CARROS		CH ENGR B. STYRON	
SUBMITTED BY (FIRM MANAGER TITLE): V.P.			03-MAY-1999 DATE
TECHNICAL BRANCH			
			FPE

DRAWING REVISIONS

Rev.	Description	Prep By	Date	Apprvd.
0	FINAL DESIGN SUBMITTAL	B.PAYNE	03MAY99	B.STYRON
1	ISSUE FOR RECORD	BMS	01JUNE01	

MCAS BEAUFORT, S.C.

BACHELOR ENLISTED QUARTERS - PHASE IV

ELECTRICAL

BEQ "A" SECOND FLOOR POWER PLAN

APPROVED DATE

EFD FOR COMMANDER, NAVFAC

Naval Facilities Engineering Command

Southern Division

Charleston, South Carolina

RECORD DRAWING DATE

CODE I.D. NO. 80091

DRAWING SIZE: D

SPEC. NO.06-98-0690

CONSTRN. CONTR. NO. N62467-98-D-0690

NAVFAC DRAWING NO. 5364468

SHEET 12 OF 44

EPP-21

$$$$ USERNAME $$$$ $$$$ DATE&TIME $$$$ $$$$ DESIGN FILE NAME $$$$

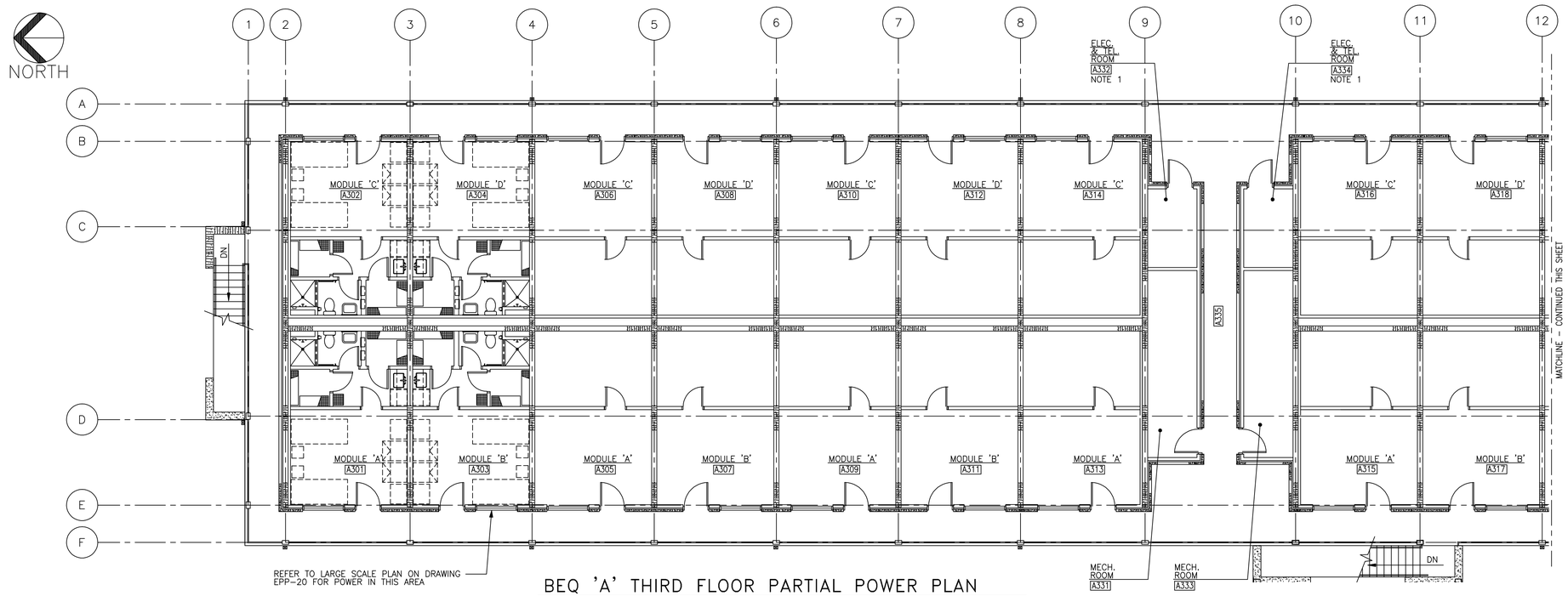

BEQ 'A' THIRD FLOOR PARTIAL POWER PLAN

1/8"=1'-0'

NOTES

1. FOR LAYOUT OF ELECTRICAL EQUIPMENT AND RECEPTACLES IN THIS AREA SEE DRAWINGS EPP-20 AND EXX-03.

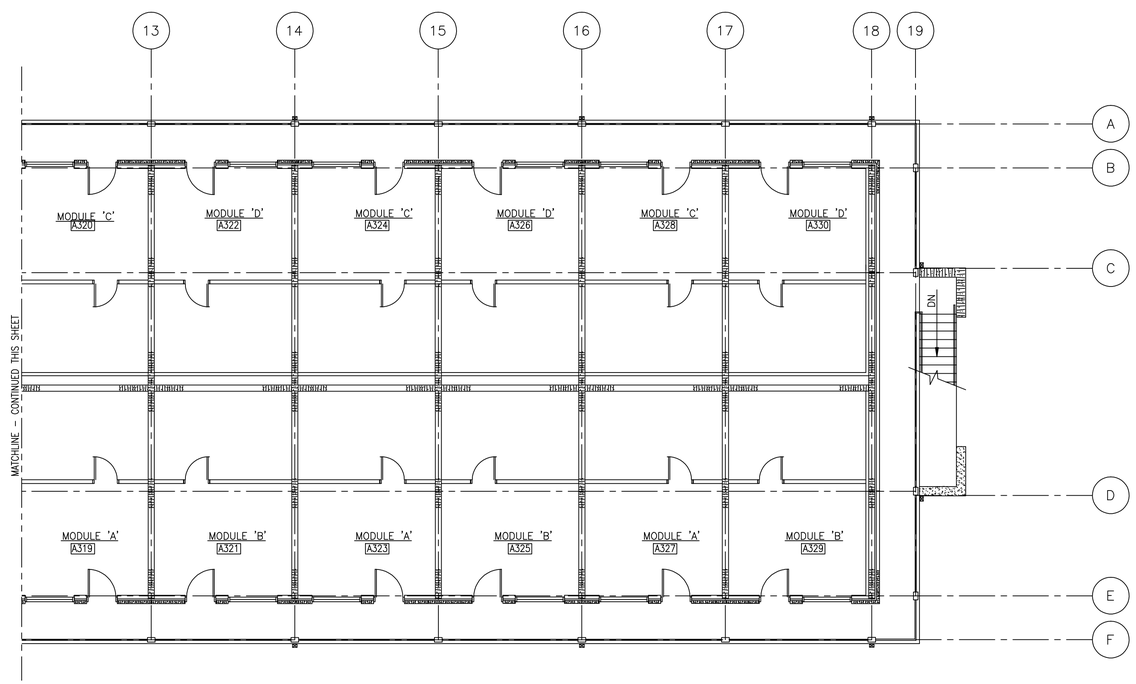

BEQ 'A' THIRD FLOOR PARTIAL POWER PLAN

1/8"=1'-0'

0 4 8 16 24

1/8"=1'-0"

J.A. JONES MANAGEMENT SERVICES, INC. OF THE CAROLINAS

LOCKWOOD GREENE Consulting Design Construction

DSGR B. PAYNE	DR B. PRICE	CHK B. STYRON	
SUPV C. CARROS		CH ENGR B. STYRON	
SUBMITTED BY (PRM MANAGER TITLE): V.P.			03-MAY-1999 DATE
TECHNICAL BRANCH			
			FPE

DRAWING REVISIONS

Rev.	Description	Prep By	Date	Apprvd.
0	FINAL DESIGN SUBMITTAL	B.PAYNE	03MAY99	B.STYRON
1	ISSUE FOR RECORD	BMS	01JUNE01	

MCAS

BACHELOR ENLISTED QUARTERS - PHASE IV

BEAUFORT, S.C.

ELECTRICAL

BEQ "A" THIRD FLOOR POWER PLAN

APPROVED

DATE

EFD FOR COMMANDER, NAVFAC

Naval Facilities Engineering Command

Southern Division

Charleston, South Carolina

RECORD DRAWING DATE

CODE I.D. NO. 80091

DRAWING SIZE: D

SPEC. NO. 06-98-0690

CONSTRN. CONTR. NO. N62467-98-D-0690

NAVFAC DRAWING NO. 5364469

SHEET 13 OF 44

EPP-22

$$$$ USERNAME $$$$ $$$$ DATE&TIME $$$$ $$$$ DESIGN FILE NAME $$$$

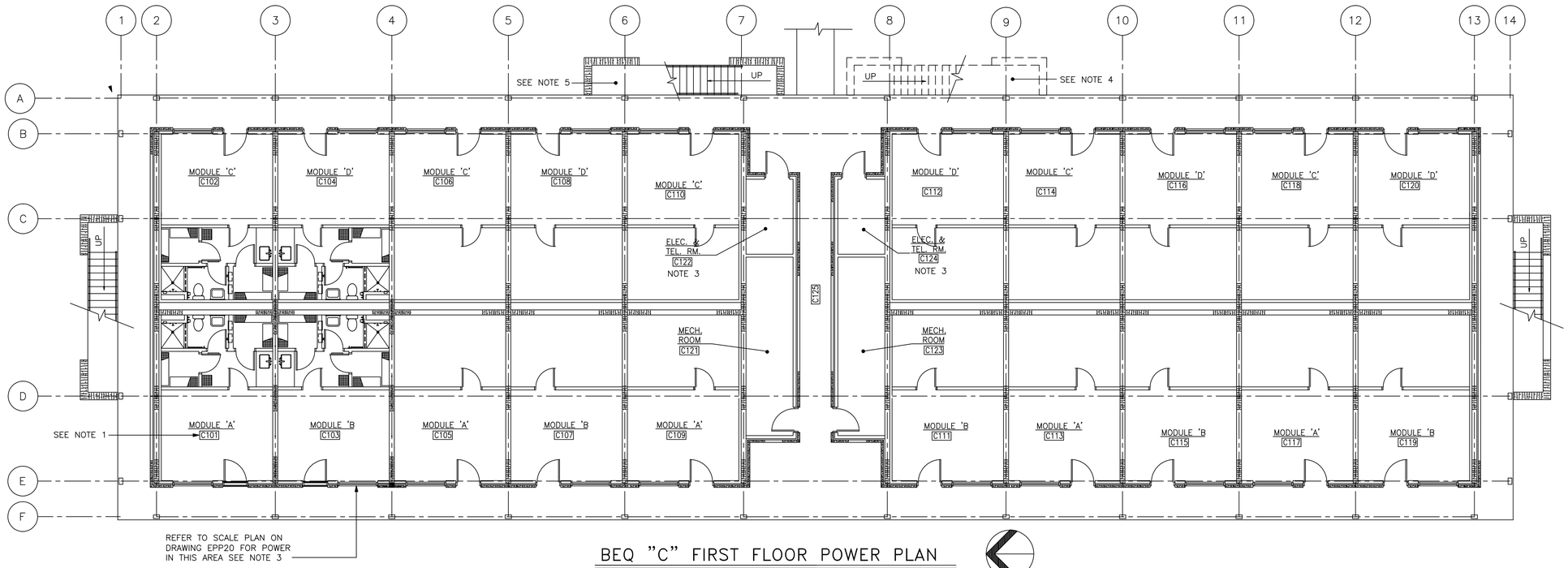

BEQ "C" FIRST FLOOR POWER PLAN

1/8"=1'-0"

NOTE: BEQ 'B' SIM. W/PLAN DIFFERENCE IN THE LOCATION OF THE STAIR ADJACENT TO THE THE BREEZEWAY.

NORTH

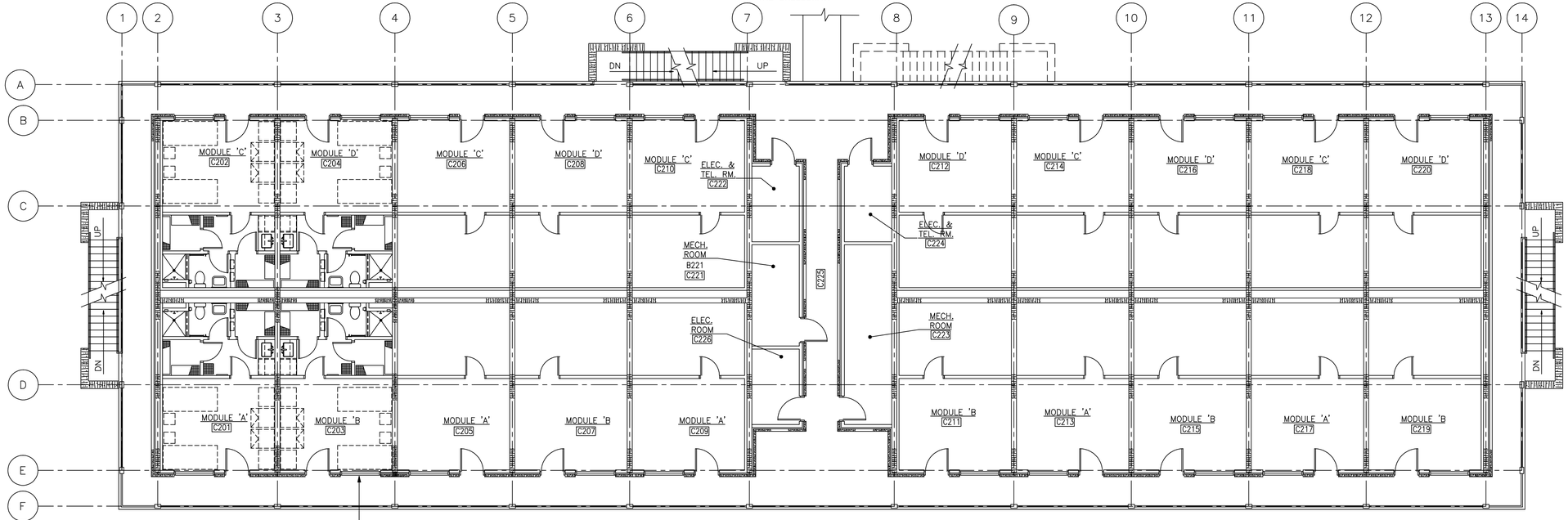

BEQ "C" SECOND FLOOR POWER PLAN

1/8"=1'-0"

NOTE: BEQ 'B' SIM. W/PLAN DIFFERENCE IN THE LOCATION OF THE STAIR ADJACENT TO THE THE BREEZEWAY.

NORTH

0 4 8 16 24

1/8"=1'-0"

NOTES:

1. ROOM NUMBERS FOR BEQ "B" WILL BE THE SAME AS THE ROOM NUMBERS FOR BEQ "C". FOR BEQ "B" REPLACE THE LETTER "C" WITH THE LETTER "B".
2. NOT USED
3. FOR LAYOUT OF ELECTRICAL EQUIPMENT IN THIS AREA SEE DRAWINGS EPP-20 AND EXX-03.
4. STAIRWELL LOCATION FOR BEQ "B" ONLY.
5. STAIRWELL LOCATION FOR BEQ "C" ONLY.

J.A. JONES MANAGEMENT SERVICES, INC. OF THE CAROLINAS

LOCKWOOD GREENE Consulting Design Construction

DSGN B. PAYNE	DR B. PRICE	CHK B. STYRON	
SUPV C. CARROS		CH ENGR B. STYRON	
SUBMITTED BY (FIRM MANAGER TITLE): V.P.			03-MAY-1999 DATE
TECHNICAL BRANCH			
			FPE

DRAWING REVISIONS

Rev.	Description	Prep By	Date	Apprvd.
0	FINAL DESIGN SUBMITTAL	B.PAYNE	02MAY99	B.STYRON
1	ISSUE FOR RECORD	BWS	01JUN00	

MCAS BEAUFORT, S.C.

BACHELOR ENLISTED QUARTERS - PHASE IV

ELECTRICAL

BEQ "B & C" FIRST AND SECOND FLOOR POWER PLAN

APPROVED

DATE

EFD FOR COMMANDER, NAVFAC

Naval Facilities Engineering Command
Southern Division
Charleston, South Carolina

RECORD DRAWING DATE

CODE I.D. NO. 80091

DRAWING SIZE: D

SPEC. NO.06-98-0690

CONSTRN. CONTR. NO. N62467-98-D-0690

NAVFAC DRAWING NO. 5364470

SHEET 14 OF 44

EPP-23

$$$$ USERNAME $$$$ $$$$ DATE&TIME $$$$ $$$$ DESIGN FILE NAME $$$$

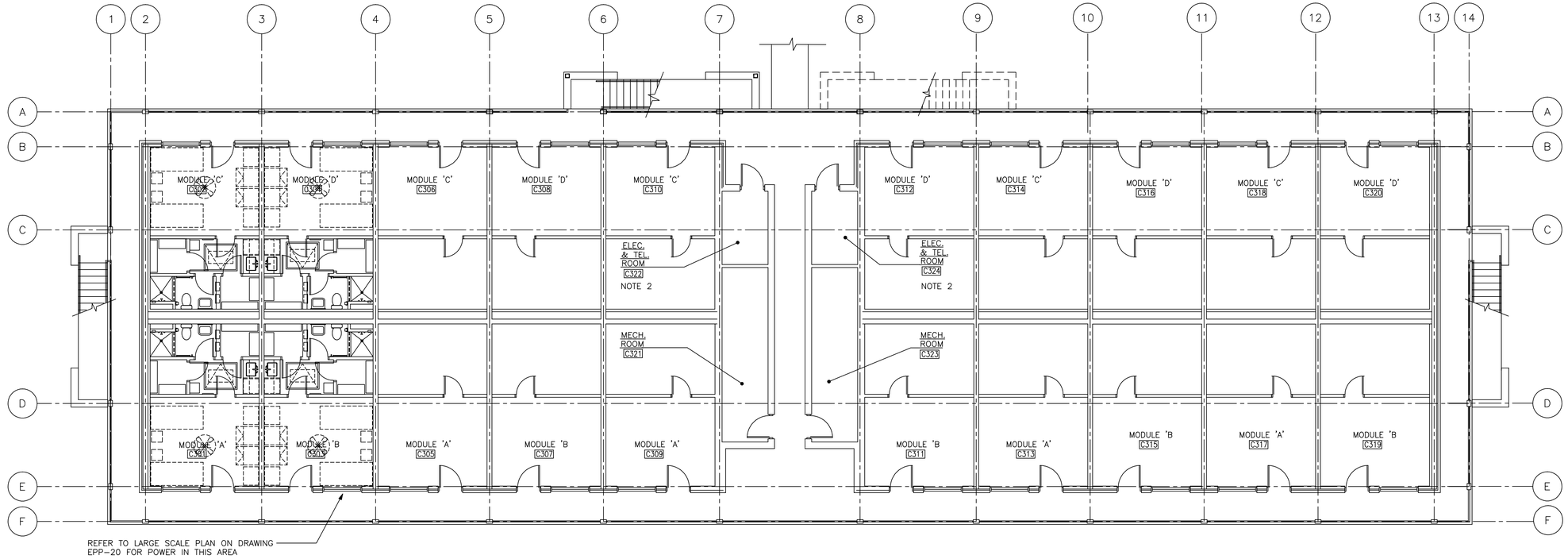

BEQ 'C' THIRD FLOOR POWER PLAN

1/8"=1'-0"

NOTE: BEQ 'B' SIM. W/PLAN DIFFERENCE IN THE LOCATION OF THE STAIR ADJACENT TO THE THE BREEZEWAY.

NOTES:

1. ROOM NUMBERS FOR BEQ "B" WILL BE THE SAME AS THE ROOM NUMBERS FOR BEQ "C". FOR BEQ"B" REPLACE THE LETTER "C" WITH THE LETTER "B".
2. FOR LAYOUT OF ELECTRICAL EQUIPMENT IN THIS AREA SEE DRAWINGS EPP-20 AND EXX-03.

0 4 8 16 24
1/8"=1'-0"

J.A. JONES MANAGEMENT SERVICES, INC. OF THE CAROLINAS
LOCKWOOD GREENE Consulting Design Construction

DSGN B. PAYNE	DR B. PRICE	CHK B. STYRON	
SUPV C. CARRIGS		CH ENGR B. STYRON	
SUBMITTED BY (FIRM MANAGER TITLE): V.P.			03-MAY-1999 DATE
TECHNICAL BRANCH			
			FPE

DRAWING REVISIONS

Rev.	Description	Prep By	Date	Apprvd.
0	FINAL DESIGN SUBMITTAL	B.PAYNE	02MAY99	B.STYRON
1	ISSUE FOR RECORD	BWS	01JUN00	

MCAS BEAUFORT, S.C.

BACHELOR ENLISTED QUARTERS - PHASE IV

ELECTRICAL

BEQ 'B' & 'C' THIRD FLOOR POWER PLAN

APPROVED

DATE EFD FOR COMMANDER, NAVFAC

Naval Facilities Engineering Command
Southern Division
Charleston, South Carolina

RECORD DRAWING DATE

CODE I.D. NO. 80091
DRAWING SIZE: D
SPEC. NO. 06-98-0690
CONSTRN. CONTR. NO. N62467-98-D-0690
NAVFAC DRAWING NO. 5364471
SHEET 15 OF 44

EPP-24

$$$$ USERNAME $$$$ $$$$ DATE&TIME $$$$ $$$$ DESIGN FILE NAME $$$$

NOTES:

1. FOR PANEL SCHEDULE SEE ESL-38.

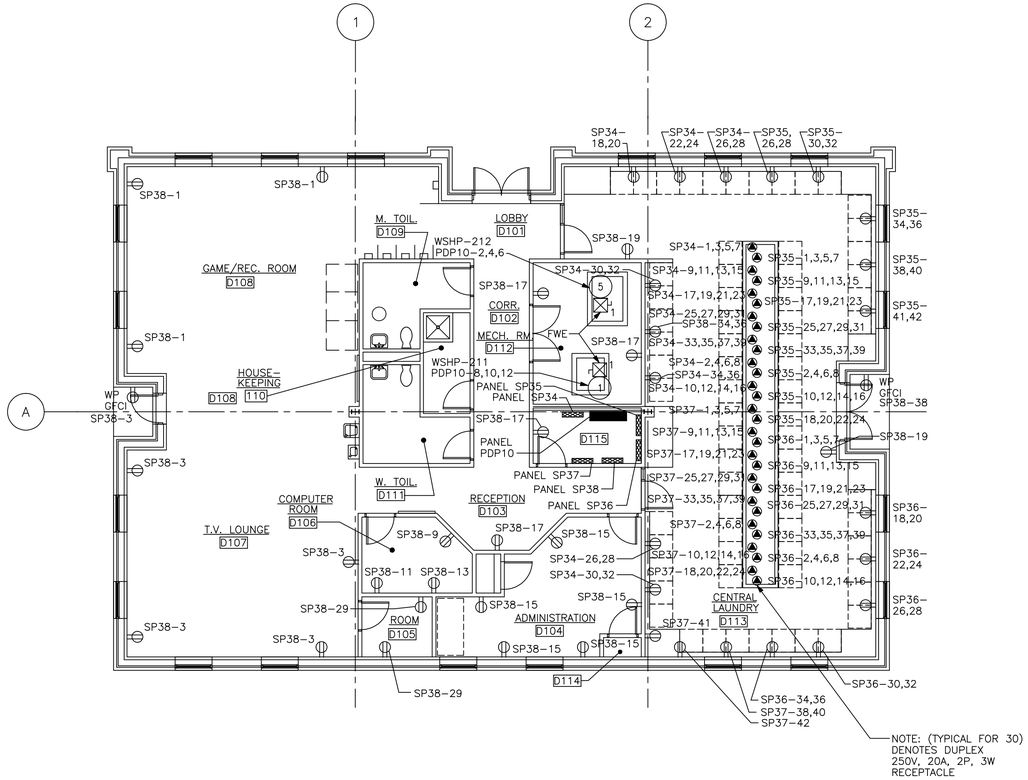

COMMUNITY CENTER FLOOR PLAN

1/8"=1'-0'

NORTH

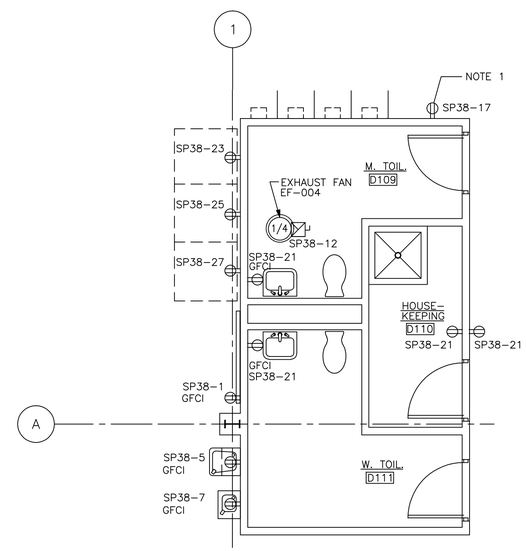

C.C. LARGE SCALE TOILET PLAN

1/4"=1'-0'

NORTH

0 4 8 12

1/4"=1'-0"

0 4 8 16 24

1/8"=1'-0"

JA JONES OF THE CAROLINAS

LOCKWOOD GREENE Consulting Design Construction

DSGN	G.WEBB	DR	M.PHELPS	CHK	R. WILLIAMS
SUPV	C. CARROS	CH ENGR	B. STYRON
SUBMITTED BY (PRM MANAGER TITLE): V.P.		DATE 03-MAY-1999
TECHNICAL BRANCH		FPE

DRAWING REVISIONS

Rev.	Description	Prep By	Date	Apprvd.
0	FINAL DESIGN SUBMITTAL	R.A.W.	03MAY99	B.STYRON
1	ISSUE FOR RECORD	BWS	01JUNE01	

MCAS BEAUFORT, S.C.

BACHELOR ENLISTED QUARTERS - PHASE IV

ELECTRICAL

COMMUNITY CENTER POWER PLAN

APPROVED

DATE

EFD FOR COMMANDER, NAVFAC

Naval Facilities Engineering Command

Southern Division

Charleston, South Carolina

RECORD DRAWING DATE

CODE I.D. NO. 80091

DRAWING SIZE: D

SPEC. NO.06-98-0690

CONSTRN. CONTR. NO. N62467-98-D-0690

NAVFAC DRAWING NO. 5364472

SHEET 16 OF 44

EPP-25

$$$$ USERNAME $$$$ $$$$ DATE&TIME $$$$ $$$$ DESIGN FILE NAME $$$$

NORTH

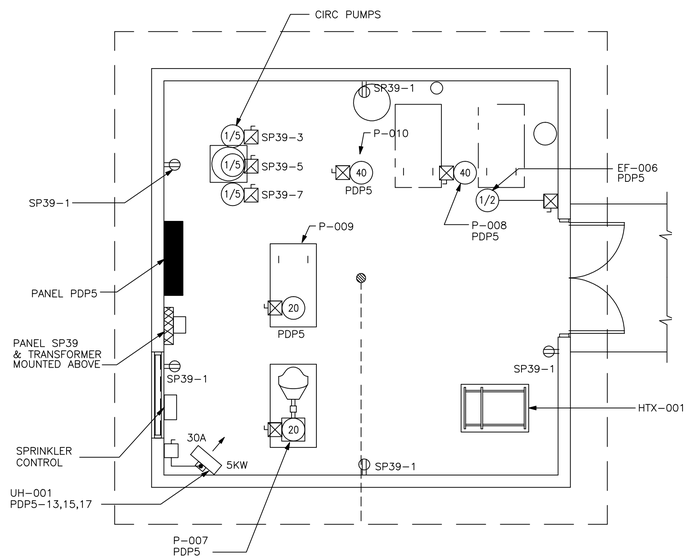

UTILITY BLDG. PLAN

1/4"=1'-0"

NOTES:

1. SEE DRAWING ESL-43 FOR PDP-5 ONE LINE.

PANEL SCHEDULE "SP39"

VOLTAGE: ■ 120/208V, 3PH, 4 WIRE ☐ 208V, 3PH, 3 WIRE ☐ 277/480V, 3PH, 4 WIRE ☐ 480V, 3PH, 3 WIRE

MOUNTING: ☐ FLUSH ■ SURFACE | MAINS: ☐ LUGS ONLY AMP. ■ MAIN BREAKER AMP. | ■ TOP ☐ BOTTOM | NEUTRAL: ☐ 50% ■ 100%

COVER: ☐ DOOR WITH LOCK ■ DOOR WITHOUT LOCK | ALL BRANCH BREAKERS 20A, 1P UNLESS NOTED U/L LISTED BREAKER INTERRUPTING CAPACITY: 10KRMS SYM. AMPS.

CONNECTED LOAD: PHASE A. 2220 W., PHASE B. 995 W., PHASE C. 900 W., TOTAL 4115 WATTS

LOCATION	LOAD	№.	A B C	№.	LOAD	LOCATION
RECEPTACLES	900	1		2	420	UTILITY BLDG. LIGHTING
CIRC. PUMPS	700	3		4	95	UTILITY BLDG. LIGHTING
CIRC. PUMPS	700	5		6		SPACE
CIRC. PUMPS	700	7		8		SPACE
CONTROL PANEL ALLOWANCE	200	9		10		SPACE
CONTROL PANEL ALLOWANCE	200	11		12		SPACE
CONTROL PANEL ALLOWANCE	200	13		14		SPACE
SPARE		15		16		SPACE
SPARE		17		18		SPACE
SPARE		19		20		SPACE
SPACE		21		22		SPACE
SPACE		23		24		SPACE
SPACE		25		26		SPACE
SPACE		27		28		SPACE
SPACE		29		30		SPACE

0 4 8 12
1/4"=1'-0"

J.A. JONES
J.A. JONES OF THE CAROLINAS
LOCKWOOD GREENE
Consulting Design-Construction

DSGN G. WEBB | DR W. PHELPS | CHK R. WILLIAMS
SUPV C. CARROS | CH ENGR B. STRON
SUBMITTED BY (FIRM MANAGER TITLE): V.P. | DATE 03-MAY-1999
TECHNICAL BRANCH
FPE

DRAWING REVISIONS

Rev.	Description	Prep By	Date	Apprvd.
0	FINAL DESIGN SUBMITTAL	G.WEBB	03MAY99	B.STRON
1	AS NOTED	APL	15JUL99	B.STRON
2	ISSUE FOR RECORD	BWS	01JUNE01	

MCAS BEAUFORT, S.C.

BACHELOR ENLISTED QUARTERS - PHASE IV

ELECTRICAL

UTILITY BUILDING POWER PLAN

APPROVED

DATE EFD FOR COMMANDER, NAVFAC

Naval Facilities Engineering Command
Southern Division
Charleston, South Carolina

RECORD DRAWING DATE

CODE I.D. NO. 80091
DRAWING SIZE: D
SPEC. NO.06-98-0690
CONSTRN. CONTR. NO. N62467-98-D-0690
NAVFAC DRAWING NO. 5364473
SHEET 17 OF 44

EPP-26

$$$$ USERNAME $$$$ $$$$ DATE&TIME $$$$ $$$$ DESIGN FILE NAME $$$$

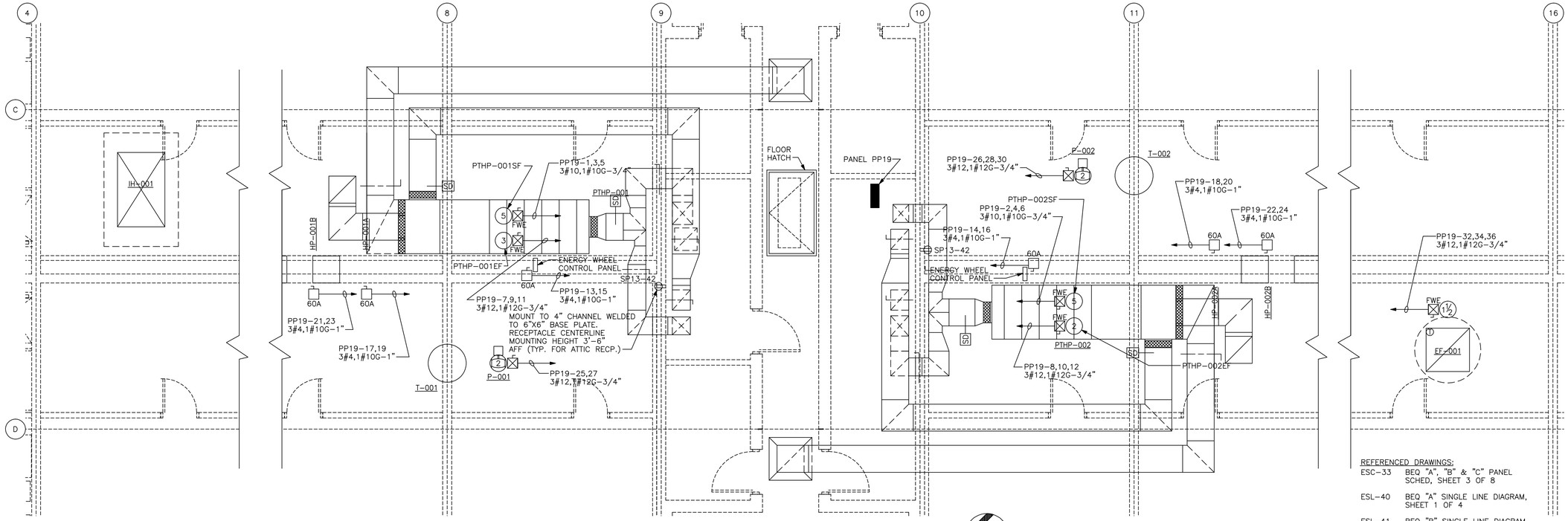

BEQ "A" ATTIC POWER PLAN

1/4"=1'-0"

NORTH

REFERENCED DRAWINGS:

ESC-33 BEQ "A", "B" & "C" PANEL SCHED, SHEET 3 OF 8

ESL-40 BEQ "A" SINGLE LINE DIAGRAM, SHEET 1 OF 4

ESL-41 BEQ "B" SINGLE LINE DIAGRAM, SHEET 2 OF 4

ESL-42 BEQ "C" SINGLE LINE DIAGRAM, SHEET 3 OF 4

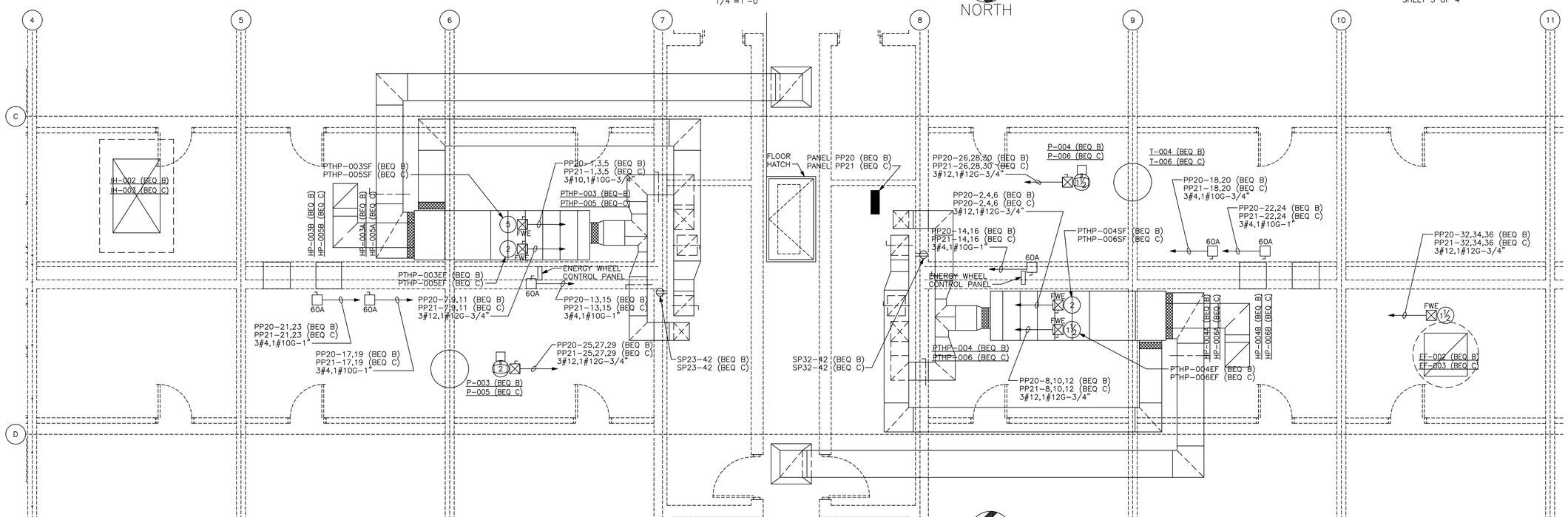

BEQ "B" & "C" ATTIC POWER PLAN

1/4"=1'-0"

NORTH

0 4 8 12

1/4"=1'-0"

J.A. JONES ENVIRONMENTAL SERVICES

J.A. JONES OF THE CAROLINAS

LOCKWOOD GREENE
Consulting•Design•Construction

DSGN B. PAYNE	DR J. ROGHOUSE	CHK	
SUPV	CH ENGR		
SUBMITTED BY (FIRM MEMBER-TITLE):			DATE
TECHNICAL BRANCH			
FPE			

DRAWING REVISIONS

Rev.	Description	Prep By	Date	Approvd.
0	FINAL DESIGN SUBMITTAL	B.PAYNE	03MAY99	B.STYRON
1	ISSUE FOR RECORD	BWS	01JUN01	

BEAUFORT, S.C.

MCAS

BACHELOR ENLISTED QUARTERS - PHASE IV

ELECTRICAL

BEQ "A", "B" & "C" ATTIC POWER PLANS

DATE

APPROVED

ETD FOR COMMANDER, NAVFAC

Naval Facilities Engineering Command
Southern Division
Charleston, South Carolina

RECORD DRAWING DATE

CODE I.D. NO. 80091

DRAWING SIZE: D

SPEC. NO.06-98-0690

CONSTRN. CONTR. NO. N62467-98-D-0690

NAVFAC DRAWING NO. 5364474

SHEET 18 OF 44

EPP-27

$$$$ USERNAME $$$$ $$$$ DATE&TIME $$$$ $$$$ DESIGN FILE NAME $$$$

F1

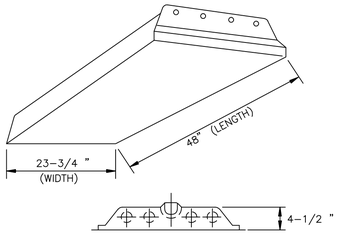

FIXTURE TYPE: FLUORESCENT TROFFER, U.L. LISTED.
LAMPS: 4-32 WATT, 2850 LUMENS F32T8/SP35.
BALLAST: F32T8/RS SOLID STATE ELECTRONIC CLASS P, SOUND RATING "A", THERMALLY PROTECTED, U.L. LISTED. PROVIDE 2-2 LAMP BALLASTS IN AREAS WITH DUAL-SWITCHING.
MATERIAL: STEEL
FINISH: POLYESTER ENAMEL (89% REFLECTANCE).
DOOR: FULLY GASKETED STEEL, SPRING LOADED LATCHES.
DIFFUSER: 100% ACRYLIC PRISMATIC. .125" THICK
MOUNTING: LAY-IN (EXPOSED TEE)
LINE VOLTAGE: 120 VOLTS-60 HERTZ.

F1A

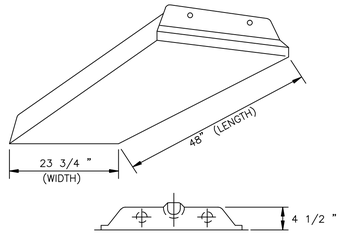

FIXTURE TYPE: FLUORESCENT TROFFER, U.L. LISTED
LAMPS: 2-32 WATT, 2850 LUMENS F32T8/SP35
BALLAST: F32T8/RS SOLID STATE ELECTRONIC CLASS P, SOUND RATING "A", THERMALLY PROTECTED, U.L. LISTED.
MATERIAL: STEEL
FINISH: POLYESTER ENAMEL (89% REFLECTANCE).
DOOR: FULLY GASKETED STEEL, SPRING LOADED LATCHES.
DIFFUSER: 100% ACRYLIC PRISMATIC. .125" THICK
MOUNTING: LAY-IN (EXPOSED TEE)
LINE VOLTAGE: 120 VOLTS-60 HERTZ.

F2

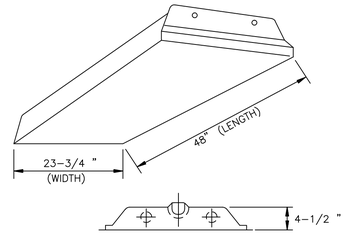

FIXTURE TYPE: FLUORESCENT TROFFER, U.L. LISTED
LAMPS: 2-32 WATT, 2850 LUMENS F32T8/SP35
BALLAST: F32T8/RS SOLID STATE ELECTRONIC CLASS P, SOUND RATING "A", THERMALLY PROTECTED, U.L. LISTED.
MATERIAL: STEEL
FINISH: POLYESTER ENAMEL (89% REFLECTANCE).
DOOR: FULLY GASKETED STEEL, SPRING LOADED LATCHES.
DIFFUSER: 100% ACRYLIC PRISMATIC. .125" THICK
MOUNTING: OVERLAPPING FLANGED TRIM SUITABLE FOR MOUNTING IN GYPBOARD CEILING
LINE VOLTAGE: 120 VOLTS-60 HERTZ.

F3

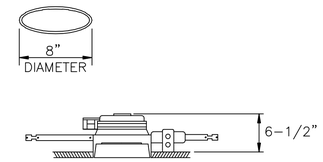

FIXTURE TYPE: COMPACT FLUORESCENT DOWNLIGHT U.L. LISTED
LAMPS: 2-13 WATT, 860 LUMENS F13DBX23T4/SPX35
BALLAST: F13DBX23T4 SOLID STATE ELECTRONIC CLASS P, SOUND RATING "A", THERMALLY PROTECTED, U.L. LISTED.
MATERIAL: STEEL
FINISH: CLEAR ALZAK
TRIM RING: WHITE POLYPROPYLENE
MOUNTING: RECESSED
LINE VOLTAGE: 120 VOLTS-60 HERTZ

F4

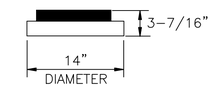

FIXTURE TYPE: COMPACT FLUORESCENT CIRCLINE FIXTURE, U.L. LISTED
LAMPS: 2-13 WATT, 860 LUMENS F13DBX23T4/SPX35
BALLAST: F13DBX23T4 SOLID STATE ELECTRONIC CLASS P, SOUND RATING "A", THERMALLY PROTECTED, U.L. LISTED.
MATERIAL: MOLDED ACRYLIC
FINISH: BLACK HOUSING
DIFFUSER ACRYLIC
MOUNTING: SURFACE-WALL OR CEILING
LINE VOLTAGE: 120 VOLTS-60 HERTZ

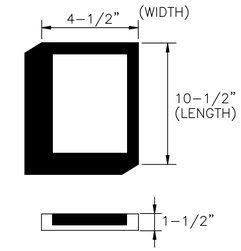

FIXTURE TYPE: COMPACT FLUORESCENT LOW-PROFILE FIXTURE, U.L. LISTED
LAMPS: 2-13 WATT, 860 LUMENS F13DBX23T4/SPX35
BALLAST: F13DBX23T4 SOLID STATE ELECTRONIC CLASS P, SOUND RATING "A", THERMALLY PROTECTED, U.L. LISTED.
MATERIAL: MOLDED ACRYLIC
FINISH: BLACK SATIN ANODIZE
DIFFUSER CLEAR ACRYLIC
MOUNTING: SURFACE
LINE VOLTAGE: 120 VOLTS-60 HERTZ

F2B

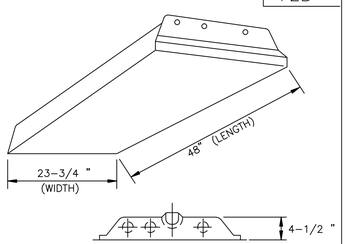

FIXTURE TYPE: FLUORESCENT TROFFER, U.L. LISTED.
LAMPS: 3-32 WATT, 2850 LUMENS F32T8/SP35.
BALLAST: F32T8/RS SOLID STATE ELECTRONIC CLASS P, SOUND RATING "A", THERMALLY PROTECTED, U.L. LISTED. PROVIDE 2-2, 1-1 LAMP BALLASTS IN AREAS WITH DUAL-SWITCHING.
MATERIAL: STEEL
FINISH: POLYESTER ENAMEL (89% REFLECTANCE).
DOOR: FULLY GASKETED STEEL, SPRING LOADED LATCHES.
DIFFUSER: 100% ACRYLIC PRISMATIC. .125" THICK
MOUNTING: LAY-IN (EXPOSED TEE)
LINE VOLTAGE: 120 VOLTS-60 HERTZ.

F6

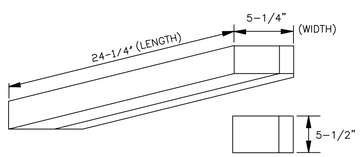

FIXTURE TYPE: FLUORESCENT WALL BRACKET, DOWNLIGHT ONLY U.L. LISTED
LAMPS: 1-17WATT, 1325 LUMENS F17T8/SP35
BALLAST: F17T8/RS SOLID STATE ELECTRONIC CLASS P, SOUND RATING "A", THERMALLY PROTECTED, U.L. LISTED.
MATERIAL: STEEL
FINISH: ALL WHITE POLYESTER POWDER ENAMEL
DIFFUSER: ACRYLIC BOTTOM LENS, NO WRAPAROUND DIFFUSER
MOUNTING: SURFACE
LINE VOLTAGE: 120 VOLTS 60 HERTZ

F6A

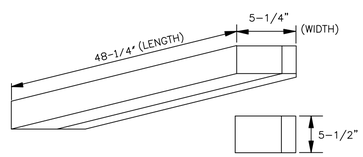

FIXTURE TYPE: FLUORESCENT WALL BRACKET, DOWNLIGHT ONLY U.L. LISTED
LAMPS: 1-32 WATT 2850 LUMENS F32T8/SP35
BALLAST: F32T8/RS SOLID STATE ELECTRONIC CLASS P, SOUND RATING "A", THERMALLY PROTECTED, U.L. LISTED.
MATERIAL: STEEL
FINISH: ALL WHITE POLYESTER POWDER ENAMEL
DIFFUSER: ACRYLIC BOTTOM LENS, NO WRAPAROUND DIFFUSER
MOUNTING: SURFACE
LINE VOLTAGE: 120 VOLTS 60 HERTZ

F7

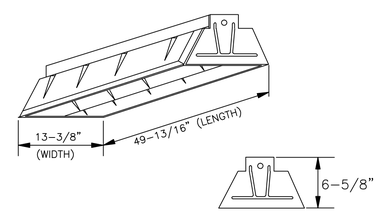

FIXTURE TYPE: FLUORESCENT PARABOLIC INDUSTRIAL U.L. LISTED
LAMPS: 2-32 WATT 2850 LUMENS F32T8/SP35.
BALLAST: F32T8/RS SOLID STATE ELECTRONIC CLASS P, SOUND RATING "A" THERMALLY PROTECTED U.L. LISTED.
MATERIAL: STEEL
FINISH: POLYESTER ENAMEL (89% REFLECTANCE).
MOUNTING: SUSPENDED
LINE VOLTAGE: 120 VOLTS, 60 HERTZ

F8

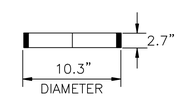

FIXTURE TYPE: COMPACT FLUORESCENT DECORATIVE EXTERIOR FIXTURE, U.L. LISTED FOR WET LOCATIONS
LAMPS: 2-9 WATT, 550 LUMENS F9DBX23T4/SPX27
BALLAST: F9DBX23T4 SOLID STATE ELECTRONIC CLASS P, SOUND RATING "A", THERMALLY PROTECTED, U.L. LISTED.
MATERIAL: DIE CAST ALUMINUM
FINISH: ELECTROSTATICALLY APPLIED BAKED ENAMEL
DIFFUSER OPAL POLYETHYLENE
MOUNTING: SURFACE
LINE VOLTAGE: 120 VOLTS-60 HERTZ

H1

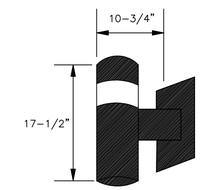

FIXTURE TYPE: HIGH PRESSURE SODIUM WALL MOUNTED BOLLARD U.L. LISTED FOR WET LOCATIONS
LAMPS: 1-35 WATT, 2250 LUMENS LU35/MED
BALLAST: ANSI S76, HIGH POWER FACTOR
MATERIAL: DIE CAST ALUMINUM
FINISH: BAKED ENAMEL
DIFFUSER: OPAL ACRYLIC
MOUNTING: SURFACE
LINE VOLTAGE: 120 VOLTS 60 HERTZ

H2

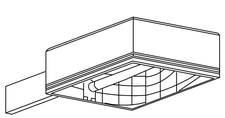

FIXTURE TYPE: AREA LUMINAIRE CUT-OFF TYPE
LAMP: HIGH PRESSURE SODIUM, 250 WATTS,
LAMP LUMENS: 28000 NOMINAL, INITIAL
LAMP LIFE: 24,000 HOURS
BALLAST: ANSI S50 HIGH REACTANCE HIGH POWER FACTOR, MULTI-TAP.
MATERIAL: EXTRUDED ALUMINUM
REFLECTOR: ANODIZED ALUMINUM SEGMENTED PANELS
DISTRIBUTION: IES TYPE III (ASYMMETRIC)
MOUNTING: 40' POLE
VOLTAGE: 277 VOLTS-60 HERTZ

H3

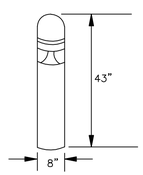

FIXTURE TYPE: ARCHITECTURAL BOLLARD DOME TOP
LAMP: 1-70 WATT, 6400 LUMENS LU70
BALLAST: ANSI S62 HIGH POWER FACTOR
MATERIAL: EXTRUDED ALUMINUM
REFLECTOR: HYDROFORMED, FLUTED, ANODIZED ALUMINUM UPPER REFLECTOR COMBINED WITH SPUN ALUMINUM, ANODIZED FLARED CONE
DISTRIBUTION: IES TYPE V
MOUNTING: CONCRETE BASE ON GRADE
VOLTAGE: 277 VOLTS-60 HERTZ

H4

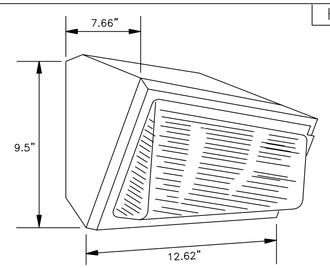

FIXTURE TYPE: WALL PACK LUMINAIRE.
LAMP: 1-70 WATT, 6400 LUMENS LU70
BALLAST: ANSI S62 HIGH POWER FACTOR
MATERIAL: DIE CAST ALUMINUM.
REFLECTOR: ANODIZED ALUMINUM.
REFRACTOR: PRISMATIC BOROSILICATE
MOUNTING: WALL, 10'-0" A.F.F. UNLESS NOTED OTHERWISE
VOLTAGE: 120 VOLTS-60 HERTZ
NOTE: PROVIDE WITH PHOTOELECTRIC CONTROL KIT.

H5

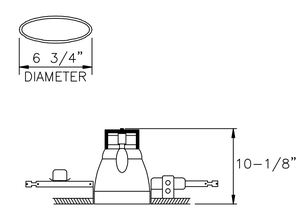

FIXTURE TYPE: HIGH PRESSURE SODIUM DOWNLIGHT, U.L. LISTED
LAMPS: 1-70 WATT, 6400 LUMENS LU 70
BALLAST: ANSI S62 HIGH POWER FACTOR
MATERIAL: ALUMINUM
FINISH: CLEAR ALZAK
TRIM RING: WHITE PAINTED FLANGE
MOUNTING: RECESSED
LINE VOLTAGE: 120 VOLTS-60 HERTZ

EX1

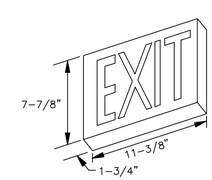

FIXTURE TYPE: ILLUMINATED EXIT SIGN.
LAMPS: L.E.D.
LETTERS: 6" TALL WITH 3/4 " STROKES. PROVIDE GREEN/LETTERS.
MOUNTING: UNIVERSAL
LINE VOLTAGE: 120 VOLTS-60 HERTZ

EX2

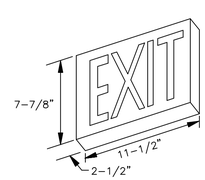

FIXTURE TYPE: ILLUMINATED EXIT SIGN. U.L. LISTED FOR DAMP LOCATIONS
LAMPS: L.E.D.
LETTERS: 6" TALL WITH 3/4 " STROKES. PROVIDE GREEN/LETTERS.
MOUNTING: UNIVERSAL
LINE VOLTAGE: 120 VOLTS-60 HERTZ

J.A. JONES MANAGEMENT SERVICES, INC. / J.A. JONES OF THE CAROLINAS
LOCKWOOD GREENE
Consulting·Design·Construction

DSGN M. ALLEN	DR B. PRICE	CHK R. WILLIAMS
SUPV C. CARROS	CH ENGR B. STYRON	
SUBMITTED BY (FIRM MEMBER TITLE): Roger Stone, V.P.		DATE 03-MAY-1999
TECHNICAL BRANCH		
FPE		

DRAWING REVISIONS

Rev.	Description	Prep By	Date	Approvd.
0	FINAL DESIGN SUBMITTAL	M.ALLEN	03MAY99	B.STYRON
1	DEL #3 ADDED #F28	APL	15JUL99	B.STYRON
2	ISSUE FOR RECORD	BWS	01JUNE01	

BEAUFORT, S.C.
MCAS
BACHELOR ENLISTED QUARTERS - PHASE IV
ELECTRICAL
LIGHTING FIXTURE SCHEDULES
APPROVED
DATE
ED FOR COMMANDER, NAVFAC

Naval Facilities Engineering Command
Southern Division
Charleston, South Carolina

RECORD DRAWING DATE

CODE I.D. NO.	80091
DRAWING SIZE:	D
SPEC. NO.	06-98-0690
CONSTRN. CONTR. NO.	N62467-98-D-0690
NAVFAC DRAWING NO.	5364475
SHEET 19	OF 44

ESC-30

$$$$ USERNAME $$$$ $$$$ DATE&TIME $$$$ $$$$ DESIGN FILE NAME $$$$

LOCATED IN BEQ "A" ROOM A132, FIRST FLOOR NORTH ELECTRICAL ROOM

PANEL SCHEDULE "PP1" | VOLTAGE: ☐ 120/208V, 3PH, 4 WIRE ■ 208V, 3PH, 3 WIRE ☐ 277/480V, 3PH, 4 WIRE ☐ 480V, 3PH, 3 WIRE

MOUNTING: ☐ FLUSH ■ SURFACE | MAINS: ☐ LUGS ONLY ■ MAIN BREAKER AMP. 150 AMP. ■ TOP ☐ BOTTOM | NEUTRAL: ☐ 50% ☐ 100%

COVER: ■ DOOR WITH LOCK ☐ DOOR WITHOUT LOCK | ALL BRANCH BREAKERS 20A, 1P UNLESS NOTED U/L LISTED BREAKER INTERRUPTING CAPACITY: 22000 RMS SYM. AMPS.

CONNECTED LOAD: PHASE A. 9000 W., PHASE B. 9000 W., PHASE C. 7800 W., TOTAL 25800 WATTS

LOCATION	LOAD	№.	A B C	№.	LOAD	LOCATION
RM A101 HEAT PUMP WSHP-001	900	1	15 15	2	900	RM A102 HEAT PUMP WSHP-014
RM A101 HEAT PUMP WSHP-001	900	3		4	900	RM A102 HEAT PUMP WSHP-014
RM A103 HEAT PUMP WSHP-002	900	5	15 15	6	900	RM A104 HEAT PUMP WSHP-013
RM A103 HEAT PUMP WSHP-002	900	7		8	900	RM A104 HEAT PUMP WSHP-013
RM A105 HEAT PUMP WSHP-003	900	9	15 15	10	900	RM A106 HEAT PUMP WSHP-012
RM A105 HEAT PUMP WSHP-003	900	11		12	900	RM A106 HEAT PUMP WSHP-012
RM A107 HEAT PUMP WSHP-004	900	13	15 15	14	900	RM A108 HEAT PUMP WSHP-011
RM A107 HEAT PUMP WSHP-004	900	15		16	900	RM A108 HEAT PUMP WSHP-011
RM A109 HEAT PUMP WSHP-005	900	17	15 15	18	900	RM A110 HEAT PUMP WSHP-010
RM A109 HEAT PUMP WSHP-005	900	19		20	900	RM A110 HEAT PUMP WSHP-010
RM A111 HEAT PUMP WSHP-006	900	21	15 15	22	900	RM A112 HEAT PUMP WSHP-009
RM A111 HEAT PUMP WSHP-006	900	23		24	900	RM A112 HEAT PUMP WSHP-009
RM A113 HEAT PUMP WSHP-007	900	25	15 15	26	900	RM A114 HEAT PUMP WSHP-008
RM A113 HEAT PUMP WSHP-007	900	27		28	900	RM A114 HEAT PUMP WSHP-008
SPARE		29	15 15	30		SPARE
SPARE		31		32		SPARE
SPARE		33		34		SPARE
SPARE		35		36		SPARE
SPARE		37		38		SPARE
SPARE		39		40		SPARE
RM A131 CIRC. PUMP	600	41		42		SPARE

LOCATED IN BEQ "A" ROOM A134, FIRST FLOOR SOUTH ELECTRICAL ROOM

PANEL SCHEDULE "PP2" | VOLTAGE: ☐ 120/208V, 3PH, 4 WIRE ■ 208V, 3PH, 3 WIRE ☐ 277/480V, 3PH, 4 WIRE ☐ 480V, 3PH, 3 WIRE

MOUNTING: ☐ FLUSH ■ SURFACE | MAINS: ☐ LUGS ONLY ■ MAIN BREAKER AMP. 150 AMP. ■ TOP ☐ BOTTOM | NEUTRAL: ☐ 50% ☐ 100%

COVER: ■ DOOR WITH LOCK ☐ DOOR WITHOUT LOCK | ALL BRANCH BREAKERS 20A, 1P UNLESS NOTED U/L LISTED BREAKER INTERRUPTING CAPACITY: 22000 RMS SYM. AMPS.

CONNECTED LOAD: PHASE A. 10800 W., PHASE B. 9000 W., PHASE C. 9600 W., TOTAL 29400 WATTS

LOCATION	LOAD	№.	A B C	№.	LOAD	LOCATION
RM A115 HEAT PUMP WSHP-015	900	1	15 15	2	900	RM A116 HEAT PUMP WSHP-030
RM A115 HEAT PUMP WSHP-015	900	3		4	900	RM A116 HEAT PUMP WSHP-030
RM A117 HEAT PUMP WSHP-016	900	5	15 15	6	900	RM A118 HEAT PUMP WSHP-029
RM A117 HEAT PUMP WSHP-016	900	7		8	900	RM A118 HEAT PUMP WSHP-029
RM A119 HEAT PUMP WSHP-017	900	9	15 15	10	900	RM A120 HEAT PUMP WSHP-028
RM A119 HEAT PUMP WSHP-017	900	11		12	900	RM A120 HEAT PUMP WSHP-028
RM A121 HEAT PUMP WSHP-018	900	13	15 15	14	900	RM A122 HEAT PUMP WSHP-027
RM A121 HEAT PUMP WSHP-018	900	15		16	900	RM A122 HEAT PUMP WSHP-027
RM A123 HEAT PUMP WSHP-019	900	17	15 15	18	900	RM A124 HEAT PUMP WSHP-026
RM A123 HEAT PUMP WSHP-019	900	19		20	900	RM A124 HEAT PUMP WSHP-026
RM A125 HEAT PUMP WSHP-020	900	21	15 15	22	900	RM A126 HEAT PUMP WSHP-025
RM A125 HEAT PUMP WSHP-020	900	23		24	900	RM A126 HEAT PUMP WSHP-025
RM A127 HEAT PUMP WSHP-021	900	25	15 15	26	900	RM A128 HEAT PUMP WSHP-024
RM A127 HEAT PUMP WSHP-021	900	27		28	900	RM A128 HEAT PUMP WSHP-024
RM A129 HEAT PUMP WSHP-022	900	29	15 15	30	900	RM A130 HEAT PUMP WSHP-023
RM A129 HEAT PUMP WSHP-022	900	31		32	900	RM A130 HEAT PUMP WSHP-023
SPARE		33	15 15	34		SPARE
SPARE		35		36		SPARE
SPARE		37		38		SPARE
SPARE		39		40		SPARE
RM A133 CIRC. PUMP	600	41		42		SPARE

LOCATED IN BEQ "A" ROOM A232, SECOND FLOOR NORTH ELECTRICAL ROOM

PANEL SCHEDULE "PP3" | VOLTAGE: ☐ 120/208V, 3PH, 4 WIRE ■ 208V, 3PH, 3 WIRE ☐ 277/480V, 3PH, 4 WIRE ☐ 480V, 3PH, 3 WIRE

MOUNTING: ☐ FLUSH ■ SURFACE | MAINS: ☐ LUGS ONLY ■ MAIN BREAKER AMP. 150 AMP. ■ TOP ☐ BOTTOM | NEUTRAL: ☐ 50% ☐ 100%

COVER: ■ DOOR WITH LOCK ☐ DOOR WITHOUT LOCK | ALL BRANCH BREAKERS 20A, 1P UNLESS NOTED U/L LISTED BREAKER INTERRUPTING CAPACITY: 22000 RMS SYM. AMPS.

CONNECTED LOAD: PHASE A. 9000 W., PHASE B. 9000 W., PHASE C. 7200 W., TOTAL 25200 WATTS

LOCATION	LOAD	№.	A B C	№.	LOAD	LOCATION
RM A201 HEAT PUMP WSHP-001	900	1	15 15	2	900	RM A202 HEAT PUMP WSHP-014
RM A201 HEAT PUMP WSHP-001	900	3		4	900	RM A202 HEAT PUMP WSHP-014
RM A203 HEAT PUMP WSHP-002	900	5	15 15	6	900	RM A204 HEAT PUMP WSHP-013
RM A203 HEAT PUMP WSHP-002	900	7		8	900	RM A204 HEAT PUMP WSHP-013
RM A205 HEAT PUMP WSHP-003	900	9	15 15	10	900	RM A206 HEAT PUMP WSHP-012
RM A205 HEAT PUMP WSHP-003	900	11		12	900	RM A206 HEAT PUMP WSHP-012
RM A207 HEAT PUMP WSHP-004	900	13	15 15	14	900	RM A208 HEAT PUMP WSHP-011
RM A207 HEAT PUMP WSHP-004	900	15		16	900	RM A208 HEAT PUMP WSHP-011
RM A209 HEAT PUMP WSHP-005	900	17	15 15	18	900	RM A210 HEAT PUMP WSHP-010
RM A209 HEAT PUMP WSHP-005	900	19		20	900	RM A210 HEAT PUMP WSHP-010
RM A211 HEAT PUMP WSHP-006	900	21	15 15	22	900	RM A212 HEAT PUMP WSHP-009
RM A211 HEAT PUMP WSHP-006	900	23		24	900	RM A212 HEAT PUMP WSHP-009
RM A213 HEAT PUMP WSHP-007	900	25	15 15	26	900	RM A214 HEAT PUMP WSHP-008
RM A213 HEAT PUMP WSHP-007	900	27		28	900	RM A214 HEAT PUMP WSHP-008
SPARE		29	15 15	30		SPARE
SPARE		31		32		SPARE
SPARE		33		34		SPARE
SPARE		35		36		SPARE
SPARE		37		38		SPARE
SPARE		39		40		SPARE
SPARE		41		42		SPARE

LOCATED IN BEQ "A" ROOM A234, SECOND FLOOR SOUTH ELECTRICAL ROOM

PANEL SCHEDULE "PP4" | VOLTAGE: ☐ 120/208V, 3PH, 4 WIRE ■ 208V, 3PH, 3 WIRE ☐ 277/480V, 3PH, 4 WIRE ☐ 480V, 3PH, 3 WIRE

MOUNTING: ☐ FLUSH ■ SURFACE | MAINS: ☐ LUGS ONLY ■ MAIN BREAKER AMP. 150 AMP. ■ TOP ☐ BOTTOM | NEUTRAL: ☐ 50% ☐ 100%

COVER: ■ DOOR WITH LOCK ☐ DOOR WITHOUT LOCK | ALL BRANCH BREAKERS 20A, 1P UNLESS NOTED U/L LISTED BREAKER INTERRUPTING CAPACITY: 22000 RMS SYM. AMPS.

CONNECTED LOAD: PHASE A. 10800 W., PHASE B. 9000 W., PHASE C. 9000 W., TOTAL 28800 WATTS

LOCATION	LOAD	№.	A B C	№.	LOAD	LOCATION
RM A215 HEAT PUMP WSHP-015	900	1	15 15	2	900	RM A216 HEAT PUMP WSHP-030
RM A215 HEAT PUMP WSHP-015	900	3		4	900	RM A216 HEAT PUMP WSHP-030
RM A217 HEAT PUMP WSHP-016	900	5	15 15	6	900	RM A218 HEAT PUMP WSHP-029
RM A217 HEAT PUMP WSHP-016	900	7		8	900	RM A218 HEAT PUMP WSHP-029
RM A219 HEAT PUMP WSHP-017	900	9	15 15	10	900	RM A220 HEAT PUMP WSHP-028
RM A219 HEAT PUMP WSHP-017	900	11		12	900	RM A220 HEAT PUMP WSHP-028
RM A221 HEAT PUMP WSHP-018	900	13	15 15	14	900	RM A222 HEAT PUMP WSHP-027
RM A221 HEAT PUMP WSHP-018	900	15		16	900	RM A222 HEAT PUMP WSHP-027
RM A223 HEAT PUMP WSHP-019	900	17	15 15	18	900	RM A224 HEAT PUMP WSHP-026
RM A223 HEAT PUMP WSHP-019	900	19		20	900	RM A224 HEAT PUMP WSHP-026
RM A225 HEAT PUMP WSHP-020	900	21	15 15	22	900	RM A226 HEAT PUMP WSHP-025
RM A225 HEAT PUMP WSHP-020	900	23		24	900	RM A226 HEAT PUMP WSHP-025
RM A227 HEAT PUMP WSHP-021	900	25	15 15	26	900	RM A228 HEAT PUMP WSHP-024
RM A227 HEAT PUMP WSHP-021	900	27		28	900	RM A228 HEAT PUMP WSHP-024
RM A229 HEAT PUMP WSHP-022	900	29	15 15	30	900	RM A230 HEAT PUMP WSHP-023
RM A229 HEAT PUMP WSHP-022	900	31		32	900	RM A230 HEAT PUMP WSHP-023
SPARE		33	15 15	34		SPARE
SPARE		35		36		SPARE
SPARE		37		38		SPARE
SPARE		39		40		SPARE
SPARE		41		42		SPARE

LOCATED IN BEQ "A" ROOM A332, THIRD FLOOR NORTH ELECTRICAL ROOM

PANEL SCHEDULE "PP5" | VOLTAGE: ☐ 120/208V, 3PH, 4 WIRE ■ 208V, 3PH, 3 WIRE ☐ 277/480V, 3PH, 4 WIRE ☐ 480V, 3PH, 3 WIRE

MOUNTING: ☐ FLUSH ■ SURFACE | MAINS: ☐ LUGS ONLY ■ MAIN BREAKER AMP. 150 AMP. ■ TOP ☐ BOTTOM | NEUTRAL: ☐ 50% ☐ 100%

COVER: ■ DOOR WITH LOCK ☐ DOOR WITHOUT LOCK | ALL BRANCH BREAKERS 20A, 1P UNLESS NOTED U/L LISTED BREAKER INTERRUPTING CAPACITY: 22000 RMS SYM. AMPS.

CONNECTED LOAD: PHASE A. 9000 W., PHASE B. 9000 W., PHASE C. 7200 W., TOTAL 25200 WATTS

LOCATION	LOAD	№.	A B C	№.	LOAD	LOCATION
RM A301 HEAT PUMP WSHP-001	900	1	15 15	2	900	RM A302 HEAT PUMP WSHP-014
RM A301 HEAT PUMP WSHP-001	900	3		4	900	RM A302 HEAT PUMP WSHP-014
RM A303 HEAT PUMP WSHP-002	900	5	15 15	6	900	RM A304 HEAT PUMP WSHP-013
RM A303 HEAT PUMP WSHP-002	900	7		8	900	RM A304 HEAT PUMP WSHP-013
RM A305 HEAT PUMP WSHP-003	900	9	15 15	10	900	RM A306 HEAT PUMP WSHP-012
RM A305 HEAT PUMP WSHP-003	900	11		12	900	RM A306 HEAT PUMP WSHP-012
RM A307 HEAT PUMP WSHP-004	900	13	15 15	14	900	RM A308 HEAT PUMP WSHP-011
RM A307 HEAT PUMP WSHP-004	900	15		16	900	RM A308 HEAT PUMP WSHP-011
RM A309 HEAT PUMP WSHP-005	900	17	15 15	18	900	RM A310 HEAT PUMP WSHP-010
RM A309 HEAT PUMP WSHP-005	900	19		20	900	RM A310 HEAT PUMP WSHP-010
RM A311 HEAT PUMP WSHP-006	900	21	15 15	22	900	RM A312 HEAT PUMP WSHP-009
RM A311 HEAT PUMP WSHP-006	900	23		24	900	RM A312 HEAT PUMP WSHP-009
RM A313 HEAT PUMP WSHP-007	900	25	15 15	26	900	RM A314 HEAT PUMP WSHP-008
RM A313 HEAT PUMP WSHP-007	900	27		28	900	RM A314 HEAT PUMP WSHP-008
SPARE		29	15 15	30		SPARE
SPARE		31		32		SPARE
SPARE		33	15 15	34		SPARE
SPARE		35		36		SPARE
SPARE		37		38		SPARE
SPARE		39		40		SPARE
SPARE		41		42		SPARE

LOCATED IN BEQ "A" ROOM A334, THIRD FLOOR SOUTH ELECTRICAL ROOM

PANEL SCHEDULE "PP6" | VOLTAGE: ☐ 120/208V, 3PH, 4 WIRE ■ 208V, 3PH, 3 WIRE ☐ 277/480V, 3PH, 4 WIRE ☐ 480V, 3PH, 3 WIRE

MOUNTING: ☐ FLUSH ■ SURFACE | MAINS: ☐ LUGS ONLY ■ MAIN BREAKER AMP. 150 AMP. ■ TOP ☐ BOTTOM | NEUTRAL: ☐ 50% ☐ 100%

COVER: ■ DOOR WITH LOCK ☐ DOOR WITHOUT LOCK | ALL BRANCH BREAKERS 20A, 1P UNLESS NOTED U/L LISTED BREAKER INTERRUPTING CAPACITY: 22000 RMS SYM. AMPS.

CONNECTED LOAD: PHASE A. 10800 W., PHASE B. 9000 W., PHASE C. 9000 W., TOTAL 28800 WATTS

LOCATION	LOAD	№.	A B C	№.	LOAD	LOCATION
RM A315 HEAT PUMP WSHP-015	900	1	15 15	2	900	RM A316 HEAT PUMP WSHP-030
RM A315 HEAT PUMP WSHP-015	900	3		4	900	RM A316 HEAT PUMP WSHP-030
RM A317 HEAT PUMP WSHP-016	900	5	15 15	6	900	RM A318 HEAT PUMP WSHP-029
RM A317 HEAT PUMP WSHP-016	900	7		8	900	RM A318 HEAT PUMP WSHP-029
RM A319 HEAT PUMP WSHP-017	900	9	15 15	10	900	RM A320 HEAT PUMP WSHP-028
RM A319 HEAT PUMP WSHP-017	900	11		12	900	RM A320 HEAT PUMP WSHP-028
RM A321 HEAT PUMP WSHP-018	900	13	15 15	14	900	RM A322 HEAT PUMP WSHP-027
RM A321 HEAT PUMP WSHP-018	900	15		16	900	RM A322 HEAT PUMP WSHP-027
RM A323 HEAT PUMP WSHP-019	900	17	15 15	18	900	RM A324 HEAT PUMP WSHP-026
RM A323 HEAT PUMP WSHP-019	900	19		20	900	RM A324 HEAT PUMP WSHP-026
RM A325 HEAT PUMP WSHP-020	900	21	15 15	22	900	RM A326 HEAT PUMP WSHP-025
RM A325 HEAT PUMP WSHP-020	900	23		24	900	RM A326 HEAT PUMP WSHP-025
RM A327 HEAT PUMP WSHP-021	900	25	15 15	26	900	RM A328 HEAT PUMP WSHP-024
RM A327 HEAT PUMP WSHP-021	900	27		28	900	RM A328 HEAT PUMP WSHP-024
RM A329 HEAT PUMP WSHP-022	900	29	15 15	30	900	RM A330 HEAT PUMP WSHP-023
RM A329 HEAT PUMP WSHP-022	900	31		32	900	RM A330 HEAT PUMP WSHP-023
SPARE		33	15 15	34		SPARE
SPARE		35		36		SPARE
SPARE		37		38		SPARE
SPARE		39		40		SPARE
SPARE		41		42		SPARE

J.A. JONES MANAGEMENT SERVICES, INC. / J.A. JONES OF THE CAROLINAS

LOCKWOOD GREENE Consulting Design Construction

DSGN R. STYRON | DR M. PHELPS | CHK R. WILLIAMS
SUPV C. CARROS | CH ENGR B. STYRON
SUBMITTED BY (FIRM MANAGER, TITLE): V.P. | DATE 03-MAY-1999
TECHNICAL BRANCH
FPE

DRAWING REVISIONS

Rev.	Description	Prep By	Date	Apprvd.
0	FINAL DESIGN SUBMITTAL	BPAYNE	02MAY99	SSTYRON
1	ISSUE FOR RECORD	BWS	01JUN01	

MCAS BEAUFORT, S.C.

BACHELOR ENLISTED QUARTERS - PHASE IV

ELECTRICAL

BEQ "A" PANEL SCHEDULES, SHEET 1 OF 3

APPROVED

DATE EFD FOR COMMANDER, NAVFAC

Naval Facilities Engineering Command
Southern Division
Charleston, South Carolina

RECORD DRAWING DATE

CODE I.D. NO. 80091
DRAWING SIZE: D
SPEC. NO.06-98-0690
CONSTRN. CONTR. NO. N62467-98-D-0690
NAVFAC DRAWING NO. 5364476
SHEET 28 OF 44

ESC-31

$$$$ USERNAME $$$$ $$$$ DATE&TIME $$$$ $$$$ DESIGN FILE NAME $$$$

LOCATED IN BEQ "A" ROOM A132, FIRST FLOOR NORTH ELECTRICAL ROOM

PANEL SCHEDULE "SP1" VOLTAGE: ■ 120/208V, 3PH, 4 WIRE ☐ 208V, 3PH, 3 WIRE ☐ 277/480V, 3PH, 4 WIRE ☐ 480V, 3PH, 3 WIRE

MOUNTING: ☐ FLUSH ■ SURFACE | MAINS: ☐ LUGS ONLY ■ MAIN BREAKER | ■ 100 AMP. BUS ■ TOP 80 AMP. ☐ BOTTOM | NEUTRAL: ☐ 50% ■ 100%

COVER: ■ DOOR WITH LOCK ☐ DOOR WITHOUT LOCK | ALL BRANCH BREAKERS 20A, 1P UNLESS NOTED U/L LISTED BREAKER INTERRUPTING CAPACITY: 22000 RMS SYM. AMPS.

CONNECTED LOAD: PHASE A. 9000 W., PHASE B. 7400 W., PHASE C. 8400 W., TOTAL 24800 WATTS

LOCATION	LOAD	№.	A B C	№.	LOAD	LOCATION
RM A101 DESKS,TV,FAN RECP.	1000	1		2	1000	RM A102 DESKS,TV,FAN RECP.
RM A101 RECP.	1000	3		4	1000	RM A102 RECP.
RM A101 MW & CNTR TOP RECP.	700	5		6	700	RM A102 MW & CNTR TOP RECP.
RM A101 REFRIG RECP.	500	7		8	500	RM A102 REFRIG RECP.
RM A101 TOILET RECP.	400	9		10	400	RM A102 TOILET RECP.
RM A103 DESKS,TV,FAN RECP.	1000	11		12	1000	RM A104 DESKS,TV,FAN RECP.
RM A103 RECP.	1000	13		14	1000	RM A104 RECP.
RM A103 MW & CNTR TOP RECP.	700	15		16	700	RM A104 MW & CNTR TOP RECP.
RM A103 REFRIG RECP.	500	17		18	500	RM A104 REFRIG RECP.
RM A103 TOILET RECP.	400	19		20	400	RM A104 TOILET RECP.
RM A105 DESKS,TV,FAN RECP.	1000	21		22	1000	RM A106 DESKS,TV,FAN RECP.
RM A105 RECP.	1000	23		24	1000	RM A106 RECP.
RM A105 MW & CNTR TOP RECP.	700	25		26	700	RM A106 MW & CNTR TOP RECP.
RM A105 REFRIG RECP.	500	27		28	500	RM A106 REFRIG RECP.
RM A105 TOILET RECP.	400	29		30	400	RM A106 TOILET RECP.
SPARE		31		32		SPARE
SPARE		33		34		SPARE
SPARE		35		36		SPARE
PARKING LOT LIGHTING	1800	37		38		SPARE
LIGHTING CONTACTOR	200	39		40		SPARE
RM A101,2,3,4,5&6 LTG	1200	41		42		SPARE

LOCATED IN BEQ "A" ROOM A132, FIRST FLOOR NORTH ELECTRICAL ROOM

PANEL SCHEDULE "SP2" VOLTAGE: ■ 120/208V, 3PH, 4 WIRE ☐ 208V, 3PH, 3 WIRE ☐ 277/480V, 3PH, 4 WIRE ☐ 480V, 3PH, 3 WIRE

MOUNTING: ☐ FLUSH ■ SURFACE | MAINS: ☐ LUGS ONLY ■ MAIN BREAKER | ■ 100 AMP. BUS ■ TOP 80 AMP. ☐ BOTTOM | NEUTRAL: ☐ 50% ■ 100%

COVER: ■ DOOR WITH LOCK ☐ DOOR WITHOUT LOCK | ALL BRANCH BREAKERS 20A, 1P UNLESS NOTED U/L LISTED BREAKER INTERRUPTING CAPACITY: 22000 RMS SYM. AMPS.

CONNECTED LOAD: PHASE A. 8200 W., PHASE B. 7200 W., PHASE C. 8400 W., TOTAL 23800 WATTS

LOCATION	LOAD	№.	A B C	№.	LOAD	LOCATION
RM A107 DESKS,TV,FAN RECP.	1000	1		2	1000	RM A108 DESKS,TV,FAN RECP.
RM A107 RECP.	1000	3		4	1000	RM A108 RECP.
RM A107 MW & CNTR TOP RECP.	700	5		6	700	RM A108 MW & CNTR TOP RECP.
RM A107 REFRIG RECP.	500	7		8	500	RM A108 REFRIG RECP.
RM A107 TOILET RECP.	400	9		10	400	RM A108 TOILET RECP.
RM A109 DESKS,TV,FAN RECP.	1000	11		12	1000	RM A110 DESKS,TV,FAN RECP.
RM A109 RECP.	1000	13		14	1000	RM A110 RECP.
RM A109 MW & CNTR TOP RECP.	700	15		16	700	RM A110 MW & CNTR TOP RECP.
RM A109 REFRIG RECP.	500	17		18	500	RM A110 REFRIG RECP.
RM A109 TOILET RECP.	400	19		20	400	RM A110 TOILET RECP.
RM A111 DESKS,TV,FAN RECP.	1000	21		22	1000	RM A112 DESKS,TV,FAN RECP.
RM A111 RECP.	1000	23		24	1000	RM A112 RECP.
RM A111 MW & CNTR TOP RECP.	700	25		26	700	RM A112 MW & CNTR TOP RECP.
RM A111 REFRIG RECP.	500	27		28	500	RM A112 REFRIG RECP.
RM A111 TOILET RECP.	400	29		30	400	RM A112 TOILET RECP.
RM A131,A132 & A135 RECP.	1000	31		32		SPARE
SPARE		33		34		SPARE
SPARE		35		36		SPARE
SPARE		37		38		SPARE
SPARE		39		40		SPARE
RM A107,8,9,10,11&12 LTG	1200	41		42		SPARE

LOCATED IN BEQ "A" ROOM A134, FIRST FLOOR SOUTH ELECTRICAL ROOM

PANEL SCHEDULE "SP3" VOLTAGE: ■ 120/208V, 3PH, 4 WIRE ☐ 208V, 3PH, 3 WIRE ☐ 277/480V, 3PH, 4 WIRE ☐ 480V, 3PH, 3 WIRE

MOUNTING: ☐ FLUSH ■ SURFACE | MAINS: ☐ LUGS ONLY ■ MAIN BREAKER | ■ 100 AMP. BUS ■ TOP 80 AMP. ☐ BOTTOM | NEUTRAL: ☐ 50% ■ 100%

COVER: ■ DOOR WITH LOCK ☐ DOOR WITHOUT LOCK | ALL BRANCH BREAKERS 20A, 1P UNLESS NOTED U/L LISTED BREAKER INTERRUPTING CAPACITY: 22000 RMS SYM. AMPS.

CONNECTED LOAD: PHASE A. 8600 W., PHASE B. 7700 W., PHASE C. 8400 W., TOTAL 24700 WATTS

LOCATION	LOAD	№.	A B C	№.	LOAD	LOCATION
RM A113 DESKS,TV,FAN RECP.	1000	1		2	1000	RM A114 DESKS,TV,FAN RECP.
RM A113 RECP.	1000	3		4	1000	RM A114 RECP.
RM A113 MW & CNTR TOP RECP.	700	5		6	700	RM A114 MW & CNTR TOP RECP.
RM A113 REFRIG RECP.	500	7		8	500	RM A114 REFRIG RECP.
RM A113 TOILET RECP.	400	9		10	400	RM A114 TOILET RECP.
RM A115 DESKS,TV,FAN RECP.	1000	11		12	1000	RM A116 DESKS,TV,FAN RECP.
RM A115 RECP.	1000	13		14	1000	RM A116 RECP.
RM A115 MW & CNTR TOP RECP.	700	15		16	700	RM A116 MW & CNTR TOP RECP.
RM A115 REFRIG RECP.	500	17		18	500	RM A116 REFRIG RECP.
RM A115 TOILET RECP.	400	19		20	400	RM A116 TOILET RECP.
RM A117 DESKS,TV,FAN RECP.	1000	21		22	1000	RM A118 DESKS,TV,FAN RECP.
RM A117 RECP.	1000	23		24	1000	RM A118 RECP.
RM A117 MW & CNTR TOP RECP.	700	25		26	700	RM A118 MW & CNTR TOP RECP.
RM A117 REFRIG RECP.	500	27		28	500	RM A118 REFRIG RECP.
RM A117 TOILET RECP.	400	29		30	400	RM A118 TOILET RECP.
RM A133 & A134 RECP.	800	31		32		SPARE
SPARE		33		34		SPARE
SPARE		35		36		SPARE
RM A131 THRU A134 LTG	600	37		38		SPARE
1st FL BLDG. PERIMETER LTG	500	39		40		SPARE
RM A113,14,15,16,17,18 LTG	1200	41		42		SPARE

LOCATED IN BEQ "A" ROOM A134, FIRST FLOOR SOUTH ELECTRICAL ROOM

PANEL SCHEDULE "SP4" VOLTAGE: ■ 120/208V, 3PH, 4 WIRE ☐ 208V, 3PH, 3 WIRE ☐ 277/480V, 3PH, 4 WIRE ☐ 480V, 3PH, 3 WIRE

MOUNTING: ☐ FLUSH ■ SURFACE | MAINS: ☐ LUGS ONLY ■ MAIN BREAKER | ■ 100 AMP. BUS ■ TOP 80 AMP. ☐ BOTTOM | NEUTRAL: ☐ 50% ■ 100%

COVER: ■ DOOR WITH LOCK ☐ DOOR WITHOUT LOCK | ALL BRANCH BREAKERS 20A, 1P UNLESS NOTED U/L LISTED BREAKER INTERRUPTING CAPACITY: 22000 RMS SYM. AMPS.

CONNECTED LOAD: PHASE A. 7200 W., PHASE B. 7200 W., PHASE C. 8400 W., TOTAL 22800 WATTS

LOCATION	LOAD	№.	A B C	№.	LOAD	LOCATION
RM A119 DESKS,TV,FAN RECP.	1000	1		2	1000	RM A120 DESKS,TV,FAN RECP.
RM A119 RECP.	1000	3		4	1000	RM A120 RECP.
RM A119 MW & CNTR TOP RECP.	700	5		6	700	RM A120 MW & CNTR TOP RECP.
RM A119 REFRIG RECP.	500	7		8	500	RM A120 REFRIG RECP.
RM A119 TOILET RECP.	400	9		10	400	RM A120 TOILET RECP.
RM A121 DESKS,TV,FAN RECP.	1000	11		12	1000	RM A122 DESKS,TV,FAN RECP.
RM A121 RECP.	1000	13		14	1000	RM A122 RECP.
RM A121 MW & CNTR TOP RECP.	700	15		16	700	RM A122 MW & CNTR TOP RECP.
RM A121 REFRIG RECP.	500	17		18	500	RM A122 REFRIG RECP.
RM A121 TOILET RECP.	400	19		20	400	RM A122 TOILET RECP.
RM A123 DESKS,TV,FAN RECP.	1000	21		22	1000	RM A124 DESKS,TV,FAN RECP.
RM A123 RECP.	1000	23		24	1000	RM A124 RECP.
RM A123 MW & CNTR TOP RECP.	700	25		26	700	RM A124 MW & CNTR TOP RECP.
RM A123 REFRIG RECP.	500	27		28	500	RM A124 REFRIG RECP.
RM A123 TOILET RECP.	400	29		30	400	RM A124 TOILET RECP.
SPARE		31		32		SPARE
SPARE		33		34		SPARE
SPARE		35		36		SPARE
SPARE		37		38		SPARE
SPARE		39		40		SPARE
RM A119,20,21,22,23&24 LTG	1200	41		42		SPARE

LOCATED IN BEQ "A" ROOM A134, FIRST FLOOR SOUTH ELECTRICAL ROOM

PANEL SCHEDULE "SP5" VOLTAGE: ■ 120/208V, 3PH, 4 WIRE ☐ 208V, 3PH, 3 WIRE ☐ 277/480V, 3PH, 4 WIRE ☐ 480V, 3PH, 3 WIRE

MOUNTING: ☐ FLUSH ■ SURFACE | MAINS: ☐ LUGS ONLY ■ MAIN BREAKER | ■ 100 AMP. BUS ■ TOP 80 AMP. ☐ BOTTOM | NEUTRAL: ☐ 50% ■ 100%

COVER: ■ DOOR WITH LOCK ☐ DOOR WITHOUT LOCK | ALL BRANCH BREAKERS 20A, 1P UNLESS NOTED U/L LISTED BREAKER INTERRUPTING CAPACITY: 22000 RMS SYM. AMPS.

CONNECTED LOAD: PHASE A. 7200 W., PHASE B. 7200 W., PHASE C. 8400 W., TOTAL 22800 WATTS

LOCATION	LOAD	№.	A B C	№.	LOAD	LOCATION
RM A125 DESKS,TV,FAN RECP.	1000	1		2	1000	RM A126 DESKS,TV,FAN RECP.
RM A125 RECP.	1000	3		4	1000	RM A126 RECP.
RM A125 MW & CNTR TOP RECP.	700	5		6	700	RM A126 MW & CNTR TOP RECP.
RM A125 REFRIG RECP.	500	7		8	500	RM A126 REFRIG RECP.
RM A125 TOILET RECP.	400	9		10	400	RM A126 TOILET RECP.
RM A127 DESKS,TV,FAN RECP.	1000	11		12	1000	RM A128 DESKS,TV,FAN RECP.
RM A127 RECP.	1000	13		14	1000	RM A128 RECP.
RM A127 MW & CNTR TOP RECP.	700	15		16	700	RM A128 MW & CNTR TOP RECP.
RM A127 REFRIG RECP.	500	17		18	500	RM A128 REFRIG RECP.
RM A127 TOILET RECP.	400	19		20	400	RM A128 TOILET RECP.
RM A129 DESKS,TV,FAN RECP.	1000	21		22	1000	RM A130 DESKS,TV,FAN RECP.
RM A129 RECP.	1000	23		24	1000	RM A130 RECP.
RM A129 MW & CNTR TOP RECP.	700	25		26	700	RM A130 MW & CNTR TOP RECP.
RM A129 REFRIG RECP.	500	27		28	500	RM A130 REFRIG RECP.
RM A129 TOILET RECP.	400	29		30	400	RM A130 TOILET RECP.
SPARE		31		32		SPARE
SPARE		33		34		SPARE
SPARE		35		36		SPARE
SPARE		37		38		SPARE
SPARE		39		40		SPARE
RM A125,26,27,28,29&30 LTG	1200	41		42		SPARE

LOCATED IN BEQ "A" ROOM A232, SECOND FLOOR NORTH ELECTRICAL ROOM

PANEL SCHEDULE "SP6" VOLTAGE: ■ 120/208V, 3PH, 4 WIRE ☐ 208V, 3PH, 3 WIRE ☐ 277/480V, 3PH, 4 WIRE ☐ 480V, 3PH, 3 WIRE

MOUNTING: ☐ FLUSH ■ SURFACE | MAINS: ☐ LUGS ONLY ■ MAIN BREAKER | ■ 100 AMP. BUS ■ TOP 80 AMP. ☐ BOTTOM | NEUTRAL: ☐ 50% ■ 100%

COVER: ■ DOOR WITH LOCK ☐ DOOR WITHOUT LOCK | ALL BRANCH BREAKERS 20A, 1P UNLESS NOTED U/L LISTED BREAKER INTERRUPTING CAPACITY: 22000 RMS SYM. AMPS.

CONNECTED LOAD: PHASE A. 7200 W., PHASE B. 7200 W., PHASE C. 8400 W., TOTAL 22800 WATTS

LOCATION	LOAD	№.	A B C	№.	LOAD	LOCATION
RM A201 DESKS,TV,FAN RECP.	1000	1		2	1000	RM A202 DESKS,TV,FAN RECP.
RM A201 RECP.	1000	3		4	1000	RM A202 RECP.
RM A201 MW & CNTR TOP RECP.	700	5		6	700	RM A202 MW & CNTR TOP RECP.
RM A201 REFRIG RECP.	500	7		8	500	RM A202 REFRIG RECP.
RM A201 TOILET RECP.	400	9		10	400	RM A202 TOILET RECP.
RM A203 DESKS,TV,FAN RECP.	1000	11		12	1000	RM A204 DESKS,TV,FAN RECP.
RM A203 RECP.	1000	13		14	1000	RM A204 RECP.
RM A203 MW & CNTR TOP RECP.	700	15		16	700	RM A204 MW & CNTR TOP RECP.
RM A203 REFRIG RECP.	500	17		18	500	RM A204 REFRIG RECP.
RM A203 TOILET RECP.	400	19		20	400	RM A204 TOILET RECP.
RM A205 DESKS,TV,FAN RECP.	1000	21		22	1000	RM A206 DESKS,TV,FAN RECP.
RM A205 RECP.	1000	23		24	1000	RM A206 RECP.
RM A205 MW & CNTR TOP RECP.	700	25		26	700	RM A206 MW & CNTR TOP RECP.
RM A205 REFRIG RECP.	500	27		28	500	RM A206 REFRIG RECP.
RM A205 TOILET RECP.	400	29		30	400	RM A206 TOILET RECP.
SPARE		31		32		SPARE
SPARE		33		34		SPARE
SPARE		35		36		SPARE
SPARE		37		38		SPARE
SPARE		39		40		SPARE
RM A201,2,3,4,5&6 LTG	1200	41		42		SPARE

LOCATED IN BEQ "A" ROOM A232, SECOND FLOOR NORTH ELECTRICAL ROOM

PANEL SCHEDULE "SP7" VOLTAGE: ■ 120/208V, 3PH, 4 WIRE ☐ 208V, 3PH, 3 WIRE ☐ 277/480V, 3PH, 4 WIRE ☐ 480V, 3PH, 3 WIRE

MOUNTING: ☐ FLUSH ■ SURFACE | MAINS: ☐ LUGS ONLY ■ MAIN BREAKER | ■ 100 AMP. BUS ■ TOP 80 AMP. ☐ BOTTOM | NEUTRAL: ☐ 50% ■ 100%

COVER: ■ DOOR WITH LOCK ☐ DOOR WITHOUT LOCK | ALL BRANCH BREAKERS 20A, 1P UNLESS NOTED U/L LISTED BREAKER INTERRUPTING CAPACITY: 22000 RMS SYM. AMPS.

CONNECTED LOAD: PHASE A. 8200 W., PHASE B. 7200 W., PHASE C. 8400 W., TOTAL 23800 WATTS

LOCATION	LOAD	№.	A B C	№.	LOAD	LOCATION
RM A207 DESKS,TV,FAN RECP.	1000	1		2	1000	RM A208 DESKS,TV,FAN RECP.
RM A207 RECP.	1000	3		4	1000	RM A208 RECP.
RM A207 MW & CNTR TOP RECP.	700	5		6	700	RM A208 MW & CNTR TOP RECP.
RM A207 REFRIG RECP.	500	7		8	500	RM A208 REFRIG RECP.
RM A207 TOILET RECP.	400	9		10	400	RM A208 TOILET RECP.
RM A209 DESKS,TV,FAN RECP.	1000	11		12	1000	RM A210 DESKS,TV,FAN RECP.
RM A209 RECP.	1000	13		14	1000	RM A210 RECP.
RM A209 MW & CNTR TOP RECP.	700	15		16	700	RM A210 MW & CNTR TOP RECP.
RM A209 REFRIG RECP.	500	17		18	500	RM A210 REFRIG RECP.
RM A209 TOILET RECP.	400	19		20	400	RM A210 TOILET RECP.
RM A211 DESKS,TV,FAN RECP.	1000	21		22	1000	RM A212 DESKS,TV,FAN RECP.
RM A211 RECP.	1000	23		24	1000	RM A212 RECP.
RM A211 MW & CNTR TOP RECP.	700	25		26	700	RM A212 MW & CNTR TOP RECP.
RM A211 REFRIG RECP.	500	27		28	500	RM A212 REFRIG RECP.
RM A211 TOILET RECP.	400	29		30	400	RM A212 TOILET RECP.
RM A231,A232 & A235	1000	31		32		SPARE
SPARE		33		34		SPARE
SPARE		35		36		SPARE
SPARE		37		38		SPARE
SPARE		39		40		SPARE
RM A207,8,9,10,11&12 LTG	1200	41		42		SPARE

LOCATED IN BEQ "A" ROOM A234, SECOND FLOOR SOUTH ELECTRICAL ROOM

PANEL SCHEDULE "SP8" VOLTAGE: ■ 120/208V, 3PH, 4 WIRE ☐ 208V, 3PH, 3 WIRE ☐ 277/480V, 3PH, 4 WIRE ☐ 480V, 3PH, 3 WIRE

MOUNTING: ☐ FLUSH ■ SURFACE | MAINS: ☐ LUGS ONLY ■ MAIN BREAKER | ■ 100 AMP. BUS ■ TOP 80 AMP. ☐ BOTTOM | NEUTRAL: ☐ 50% ■ 100%

COVER: ■ DOOR WITH LOCK ☐ DOOR WITHOUT LOCK | ALL BRANCH BREAKERS 20A, 1P UNLESS NOTED U/L LISTED BREAKER INTERRUPTING CAPACITY: 22000 RMS SYM. AMPS.

CONNECTED LOAD: PHASE A. 8600 W., PHASE B. 7700 W., PHASE C. 10800 W., TOTAL 27100 WATTS

LOCATION	LOAD	№.	A B C	№.	LOAD	LOCATION
RM A213 DESKS,TV,FAN RECP.	1000	1		2	1000	RM A214 DESKS,TV,FAN RECP.
RM A213 RECP.	1000	3		4	1000	RM A214 RECP.
RM A213 MW & CNTR TOP RECP.	700	5		6	700	RM A214 MW & CNTR TOP RECP.
RM A213 REFRIG RECP.	500	7		8	500	RM A214 REFRIG RECP.
RM A213 TOILET RECP.	400	9		10	400	RM A214 TOILET RECP.
RM A215 DESKS,TV,FAN RECP.	1000	11		12	1000	RM A216 DESKS,TV,FAN RECP.
RM A215 RECP.	1000	13		14	1000	RM A216 RECP.
RM A215 MW & CNTR TOP RECP.	700	15		16	700	RM A216 MW & CNTR TOP RECP.
RM A215 REFRIG RECP.	500	17		18	500	RM A216 REFRIG RECP.
RM A215 TOILET RECP.	400	19		20	400	RM A216 TOILET RECP.
RM A217 DESKS,TV,FAN RECP.	1000	21		22	1000	RM A218 DESKS,TV,FAN RECP.
RM A217 RECP.	1000	23		24	1000	RM A218 RECP.
RM A217 MW & CNTR TOP RECP.	700	25		26	700	RM A218 MW & CNTR TOP RECP.
RM A217 REFRIG RECP.	500	27		28	500	RM A218 REFRIG RECP.
RM A217 TOILET RECP.	400	29		30	400	RM A218 TOILET RECP.
RM A233 & A234 RECP.	800	31		32		SPARE
SPARE		33		34		SPARE
BLDG "A" LTG INVERTER	2400	35		36		SPARE
RM A231 THRU 234 & 236 LTG	600	37		38		SPARE
2nd FL BLDG. PERIMETER LTG	500	39		40		SPARE
RM A213,14,15,16,17,18 LTG	1200	41		42		SPARE

LOCATED IN BEQ "A" ROOM A234, SECOND FLOOR SOUTH ELECTRICAL ROOM

PANEL SCHEDULE "SP9" VOLTAGE: ■ 120/208V, 3PH, 4 WIRE ☐ 208V, 3PH, 3 WIRE ☐ 277/480V, 3PH, 4 WIRE ☐ 480V, 3PH, 3 WIRE

MOUNTING: ☐ FLUSH ■ SURFACE | MAINS: ☐ LUGS ONLY ■ MAIN BREAKER | ■ 100 AMP. BUS ■ TOP 80 AMP. ☐ BOTTOM | NEUTRAL: ☐ 50% ■ 100%

COVER: ■ DOOR WITH LOCK ☐ DOOR WITHOUT LOCK | ALL BRANCH BREAKERS 20A, 1P UNLESS NOTED U/L LISTED BREAKER INTERRUPTING CAPACITY: 22000 RMS SYM. AMPS.

CONNECTED LOAD: PHASE A. 7200 W., PHASE B. 7200 W., PHASE C. 8400 W., TOTAL 22800 WATTS

LOCATION	LOAD	№.	A B C	№.	LOAD	LOCATION
RM A219 DESKS,TV,FAN RECP.	1000	1		2	1000	RM A220 DESKS,TV,FAN RECP.
RM A219 RECP.	1000	3		4	1000	RM A220 RECP.
RM A219 MW & CNTR TOP RECP.	700	5		6	700	RM A220 MW & CNTR TOP RECP.
RM A219 REFRIG RECP.	500	7		8	500	RM A220 REFRIG RECP.
RM A219 TOILET RECP.	400	9		10	400	RM A220 TOILET RECP.
RM A221 DESKS,TV,FAN RECP.	1000	11		12	1000	RM A222 DESKS,TV,FAN RECP.
RM A221 RECP.	1000	13		14	1000	RM A222 RECP.
RM A221 MW & CNTR TOP RECP.	700	15		16	700	RM A222 MW & CNTR TOP RECP.
RM A221 REFRIG RECP.	500	17		18	500	RM A222 REFRIG RECP.
RM A221 TOILET RECP.	400	19		20	400	RM A222 TOILET RECP.
RM A223 DESKS,TV,FAN RECP.	1000	21		22	1000	RM A224 DESKS,TV,FAN RECP.
RM A223 RECP.	1000	23		24	1000	RM A224 RECP.
RM A223 MW & CNTR TOP RECP.	700	25		26	700	RM A224 MW & CNTR TOP RECP.
RM A223 REFRIG RECP.	500	27		28	500	RM A224 REFRIG RECP.
RM A223 TOILET RECP.	400	29		30	400	RM A224 TOILET RECP.
SPARE		31		32		SPARE
SPARE		33		34		SPARE
SPARE		35		36		SPARE
SPARE		37		38		SPARE
SPARE		39		40		SPARE
RM A219,20,21,22,23&24 LTG	1200	41		42		SPARE

JA. JONES / JA. JONES OF THE CAROLINAS

LOCKWOOD GREENE
Consulting·Design·Construction

DSGN B. STYRON	DR K. PHELPS	CHK G. WILLIAMS
SUPV C. CARROLS	CH. ENGR B. STYRON	
SUBMITTED BY (FIRM MEMBER-TITLE) V.P. 03-MAY-1999		DATE
TECHNICAL BRANCH		
FPE		

DRAWING REVISIONS

Rev.	Description	Prep By	Date	Approvd.
0	FINAL DESIGN SUBMITTAL	BPAYNE	03MAY99	BSTYRON
1	ISSUE FOR RECORD	BVS	01JUN01	

BEAUFORT, S.C.

QUARTERS - PHASE IV

ELECTRICAL
BEQ "A" PANEL SCHEDULES,SHEET 2 OF 3

DATE | ETD FOR COMMANDER, NAVFAC

MCAS
BACHELOR ENLISTED QUARTERS

APPROVED | DATE

Naval Facilities Engineering Command
Southern Division
Charleston, South Carolina

RECORD DRAWING DATE

CODE I.D. NO. 80091
DRAWING SIZE: D
SPEC. NO.06-98-0690
CONSTRN. CONTR. NO. N62467-98-D-0690
NAVFAC DRAWING NO. 5364477
SHEET 21 OF 44

ESC-32

$$$$ USERNAME $$$$ $$$$ DATE&TIME $$$$ $$$$ DESIGN FILE NAME $$$$

LOCATED IN BEQ "A" ROOM A234, SECOND FLOOR SOUTH ELECTRICAL ROOM

PANEL SCHEDULE "SP10"

VOLTAGE: ■ 120/208V, 3PH, 4 WIRE □ 208V, 3PH, 3 WIRE □ 277/480V, 3PH, 4 WIRE □ 480V, 3PH, 3 WIRE

MOUNTING: □ FLUSH ■ SURFACE | MAINS: □ LUGS ONLY ■ 100 AMP.BUS ■ TOP ■ MAIN BREAKER 80 AMP. □ BOTTOM | NEUTRAL: □ 50% ■ 100%

COVER: ■ DOOR WITH LOCK □ DOOR WITHOUT LOCK | ALL BRANCH BREAKERS 20A, 1P UNLESS NOTED U/L LISTED BREAKER INTERRUPTING CAPACITY: 22000 RMS SYM. AMPS.

CONNECTED LOAD: PHASE A. 7200 W., PHASE B. 7200 W., PHASE C. 8400 W., TOTAL 22800 WATTS

LOCATION	LOAD	№.	A B C	№.	LOAD	LOCATION
RM A225 DESKS,TV,FAN RECP.	1000	1		2	1000	RM A226 DESKS,TV,FAN RECP.
RM A225 RECP.	1000	3		4	1000	RM A226 RECP.
RM A225 MW & CNTR TOP RECP.	700	5		6	700	RM A226 MW & CNTR TOP RECP.
RM A225 REFRIG RECP.	500	7		8	500	RM A226 REFRIG RECP.
RM A225 TOILET RECP.	400	9		10	400	RM A226 TOILET RECP.
RM A227 DESKS,TV,FAN RECP.	1000	11		12	1000	RM A228 DESKS,TV,FAN RECP.
RM A227 RECP.	1000	13		14	1000	RM A228 RECP.
RM A227 MW & CNTR TOP RECP.	700	15		16	700	RM A228 MW & CNTR TOP RECP.
RM A227 REFRIG RECP.	500	17		18	500	RM A228 REFRIG RECP.
RM A227 TOILET RECP.	400	19		20	400	RM A228 TOILET RECP.
RM A229 DESKS,TV,FAN RECP.	1000	21		22	1000	RM A230 DESKS,TV,FAN RECP.
RM A229 RECP.	1000	23		24	1000	RM A230 RECP.
RM A229 MW & CNTR TOP RECP.	700	25		26	700	RM A230 MW & CNTR TOP RECP.
RM A229 REFRIG RECP.	500	27		28	500	RM A230 REFRIG RECP.
RM A229 TOILET RECP.	400	29		30	400	RM A230 TOILET RECP.
SPARE		31		32		SPARE
SPARE		33		34		SPARE
SPARE		35		36		SPARE
SPARE		37		38		SPARE
SPARE		39		40		SPARE
RM A225,26,27,28,29&30 LTG	1200	41		42		SPARE

LOCATED IN BEQ "A" ROOM A332, THIRD FLOOR NORTH ELECTRICAL ROOM

PANEL SCHEDULE "SP11"

VOLTAGE: ■ 120/208V, 3PH, 4 WIRE □ 208V, 3PH, 3 WIRE □ 277/480V, 3PH, 4 WIRE □ 480V, 3PH, 3 WIRE

MOUNTING: □ FLUSH ■ SURFACE | MAINS: □ LUGS ONLY ■ 100 AMP.BUS ■ TOP ■ MAIN BREAKER 80 AMP. □ BOTTOM | NEUTRAL: □ 50% ■ 100%

COVER: ■ DOOR WITH LOCK □ DOOR WITHOUT LOCK | ALL BRANCH BREAKERS 20A, 1P UNLESS NOTED U/L LISTED BREAKER INTERRUPTING CAPACITY: 22000 RMS SYM. AMPS.

CONNECTED LOAD: PHASE A. 7200 W., PHASE B. 7200 W., PHASE C. 8400 W., TOTAL 22800 WATTS

LOCATION	LOAD	№.	A B C	№.	LOAD	LOCATION
RM A301 DESKS,TV,FAN RECP.	1000	1		2	1000	RM A302 DESKS,TV,FAN RECP.
RM A301 RECP.	1000	3		4	1000	RM A302 RECP.
RM A301 MW & CNTR TOP RECP.	700	5		6	700	RM A302 MW & CNTR TOP RECP.
RM A301 REFRIG RECP.	500	7		8	500	RM A302 REFRIG RECP.
RM A301 TOILET RECP.	400	9		10	400	RM A302 TOILET RECP.
RM A303 DESKS,TV,FAN RECP.	1000	11		12	1000	RM A304 DESKS,TV,FAN RECP.
RM A303 RECP.	1000	13		14	1000	RM A304 RECP.
RM A303 MW & CNTR TOP RECP.	700	15		16	700	RM A304 MW & CNTR TOP RECP.
RM A303 REFRIG RECP.	500	17		18	500	RM A304 REFRIG RECP.
RM A303 TOILET RECP.	400	19		20	400	RM A304 TOILET RECP.
RM A305 DESKS,TV,FAN RECP.	1000	21		22	1000	RM A306 DESKS,TV,FAN RECP.
RM A305 RECP.	1000	23		24	1000	RM A306 RECP.
RM A305 MW & CNTR TOP RECP.	700	25		26	700	RM A306 MW & CNTR TOP RECP.
RM A305 REFRIG RECP.	500	27		28	500	RM A306 REFRIG RECP.
RM A305 TOILET RECP.	400	29		30	400	RM A306 TOILET RECP.
SPARE		31		32		SPARE
SPARE		33		34		SPARE
SPARE		35		36		SPARE
SPARE		37		38		SPARE
SPARE		39		40		SPARE
RM A301,2,3,4,5&6 LTG	1200	41		42		SPARE

LOCATED IN BEQ "A" ROOM A332, THIRD FLOOR NORTH ELECTRICAL ROOM

PANEL SCHEDULE "SP12"

VOLTAGE: ■ 120/208V, 3PH, 4 WIRE □ 208V, 3PH, 3 WIRE □ 277/480V, 3PH, 4 WIRE □ 480V, 3PH, 3 WIRE

MOUNTING: □ FLUSH ■ SURFACE | MAINS: □ LUGS ONLY ■ 100 AMP.BUS ■ TOP ■ MAIN BREAKER 80 AMP. □ BOTTOM | NEUTRAL: □ 50% ■ 100%

COVER: ■ DOOR WITH LOCK □ DOOR WITHOUT LOCK | ALL BRANCH BREAKERS 20A, 1P UNLESS NOTED U/L LISTED BREAKER INTERRUPTING CAPACITY: 22000 RMS SYM. AMPS.

CONNECTED LOAD: PHASE A. 8200 W., PHASE B. 7200 W., PHASE C. 8400 W., TOTAL 23800 WATTS

LOCATION	LOAD	№.	A B C	№.	LOAD	LOCATION
RM A307 DESKS,TV,FAN RECP.	1000	1		2	1000	RM A308 DESKS,TV,FAN RECP.
RM A307 RECP.	1000	3		4	1000	RM A308 RECP.
RM A307 MW & CNTR TOP RECP.	700	5		6	700	RM A308 MW & CNTR TOP RECP.
RM A307 REFRIG RECP.	500	7		8	500	RM A308 REFRIG RECP.
RM A307 TOILET RECP.	400	9		10	400	RM A308 TOILET RECP.
RM A309 DESKS,TV,FAN RECP.	1000	11		12	1000	RM A310 DESKS,TV,FAN RECP.
RM A309 RECP.	1000	13		14	1000	RM A310 RECP.
RM A309 MW & CNTR TOP RECP.	700	15		16	700	RM A310 MW & CNTR TOP RECP.
RM A309 REFRIG RECP.	500	17		18	500	RM A310 REFRIG RECP.
RM A309 TOILET RECP.	400	19		20	400	RM A310 TOILET RECP.
RM A311 DESKS,TV,FAN RECP.	1000	21		22	1000	RM A312 DESKS,TV,FAN RECP.
RM A311 RECP.	1000	23		24	1000	RM A312 RECP.
RM A311 MW & CNTR TOP RECP.	700	25		26	700	RM A312 MW & CNTR TOP RECP.
RM A311 REFRIG RECP.	500	27		28	500	RM A312 REFRIG RECP.
RM A311 TOILET RECP.	400	29		30	400	RM A312 TOILET RECP.
RM A331,A332 & A335 RECP.	1000	31		32		SPARE
SPARE		33		34		SPARE
SPARE		35		36		SPARE
SPARE		37		38		SPARE
SPARE		39		40		SPARE
RM A307,8,9,10,11&12 LTG	1200	41		42		SPARE

LOCATED IN BEQ "A" ROOM A334, THIRD FLOOR SOUTH ELECTRICAL ROOM

PANEL SCHEDULE "SP13"

VOLTAGE: ■ 120/208V, 3PH, 4 WIRE □ 208V, 3PH, 3 WIRE □ 277/480V, 3PH, 4 WIRE □ 480V, 3PH, 3 WIRE

MOUNTING: □ FLUSH ■ SURFACE | MAINS: □ LUGS ONLY ■ 100 AMP. BUS ■ TOP ■ MAIN BREAKER 80 AMP. □ BOTTOM | NEUTRAL: □ 50% ■ 100%

COVER: ■ DOOR WITH LOCK □ DOOR WITHOUT LOCK | ALL BRANCH BREAKERS 20A, 1P UNLESS NOTED U/L LISTED BREAKER INTERRUPTING CAPACITY: 22000 RMS SYM. AMPS.

CONNECTED LOAD: PHASE A. 8600 W., PHASE B. 8800 W., PHASE C. 8800 W., TOTAL 26200 WATTS

LOCATION	LOAD	№.	A B C	№.	LOAD	LOCATION
RM A313 DESKS,TV,FAN RECP.	1000	1		2	1000	RM A314 DESKS,TV,FAN RECP.
RM A313 RECP.	1000	3		4	1000	RM A314 RECP.
RM A313 MW & CNTR TOP RECP.	700	5		6	700	RM A314 MW & CNTR TOP RECP.
RM A313 REFRIG RECP.	500	7		8	500	RM A314 REFRIG RECP.
RM A313 TOILET RECP.	400	9		10	400	RM A314 TOILET RECP.
RM A315 DESKS,TV,FAN RECP.	1000	11		12	1000	RM A316 DESKS,TV,FAN RECP.
RM A315 RECP.	1000	13		14	1000	RM A316 RECP.
RM A315 MW & CNTR TOP RECP.	700	15		16	700	RM A316 MW & CNTR TOP RECP.
RM A315 REFRIG RECP.	500	17		18	500	RM A316 REFRIG RECP.
RM A315 TOILET RECP.	400	19		20	400	RM A316 TOILET RECP.
RM A317 DESKS,TV,FAN RECP.	1000	21		22	1000	RM A318 DESKS,TV,FAN RECP.
RM A317 RECP.	1000	23		24	1000	RM A318 RECP.
RM A317 MW & CNTR TOP RECP.	700	25		26	700	RM A318 MW & CNTR TOP RECP.
RM A317 REFRIG RECP.	500	27		28	500	RM A318 REFRIG RECP.
RM A317 TOILET RECP.	400	29		30	400	RM A318 TOILET RECP.
RM A333 & A334 RECP.	800	31		32		SPARE
SPARE		33		34		SPARE
SPARE		35		36		SPARE
RM A331 THRU A334 LTG	600	37		38		SPARE
3rd FL BLDG PERIMETER LTG	500	39		40	1100	RM A401 LTG
RM A313,14,15,16,17,18 LTG	1200	41		42	400	RM A401 RECP.

LOCATED IN BEQ "A" ROOM A334, THIRD FLOOR SOUTH ELECTRICAL ROOM

PANEL SCHEDULE "SP14"

VOLTAGE: ■ 120/208V, 3PH, 4 WIRE □ 208V, 3PH, 3 WIRE □ 277/480V, 3PH, 4 WIRE □ 480V, 3PH, 3 WIRE

MOUNTING: □ FLUSH ■ SURFACE | MAINS: □ LUGS ONLY ■ 100 AMP.BUS ■ TOP ■ MAIN BREAKER 80 AMP. □ BOTTOM | NEUTRAL: □ 50% ■ 100%

COVER: ■ DOOR WITH LOCK □ DOOR WITHOUT LOCK | ALL BRANCH BREAKERS 20A, 1P UNLESS NOTED U/L LISTED BREAKER INTERRUPTING CAPACITY: 22000 RMS SYM. AMPS.

CONNECTED LOAD: PHASE A. 7200 W., PHASE B. 7200 W., PHASE C. 8400 W., TOTAL 22800 WATTS

LOCATION	LOAD	№.	A B C	№.	LOAD	LOCATION
RM A319 DESKS,TV,FAN RECP.	1000	1		2	1000	RM A320 DESKS,TV,FAN RECP.
RM A319 RECP.	1000	3		4	1000	RM A320 RECP.
RM A319 MW & CNTR TOP RECP.	700	5		6	700	RM A320 MW & CNTR TOP RECP.
RM A319 REFRIG RECP.	500	7		8	500	RM A320 REFRIG RECP.
RM A319 TOILET RECP.	400	9		10	400	RM A320 TOILET RECP.
RM A321 DESKS,TV,FAN RECP.	1000	11		12	1000	RM A322 DESKS,TV,FAN RECP.
RM A321 RECP.	1000	13		14	1000	RM A322 RECP.
RM A321 MW & CNTR TOP RECP.	700	15		16	700	RM A322 MW & CNTR TOP RECP.
RM A321 REFRIG RECP.	500	17		18	500	RM A322 REFRIG RECP.
RM A321 TOILET RECP.	400	19		20	400	RM A322 TOILET RECP.
RM A323 DESKS,TV,FAN RECP.	1000	21		22	1000	RM A324 DESKS,TV,FAN RECP.
RM A323 RECP.	1000	23		24	1000	RM A324 RECP.
RM A323 MW & CNTR TOP RECP.	700	25		26	700	RM A324 MW & CNTR TOP RECP.
RM A323 REFRIG RECP.	500	27		28	500	RM A324 REFRIG RECP.
RM A323 TOILET RECP.	400	29		30	400	RM A324 TOILET RECP.
SPARE		31		32		SPARE
SPARE		33		34		SPARE
SPARE		35		36		SPARE
SPARE		37		38		SPARE
SPARE		39		40		SPARE
RM A319,20,21,22,23&24 LTG	1200	41		42		SPARE

LOCATED IN BEQ "A" ROOM A334, THIRD FLOOR SOUTH ELECTRICAL ROOM

PANEL SCHEDULE "SP15"

VOLTAGE: ■ 120/208V, 3PH, 4 WIRE □ 208V, 3PH, 3 WIRE □ 277/480V, 3PH, 4 WIRE □ 480V, 3PH, 3 WIRE

MOUNTING: □ FLUSH ■ SURFACE | MAINS: □ LUGS ONLY ■ 100 AMP.BUS ■ TOP ■ MAIN BREAKER 80 AMP. □ BOTTOM | NEUTRAL: □ 50% ■ 100%

COVER: ■ DOOR WITH LOCK □ DOOR WITHOUT LOCK | ALL BRANCH BREAKERS 20A, 1P UNLESS NOTED U/L LISTED BREAKER INTERRUPTING CAPACITY: 22000 RMS SYM. AMPS.

CONNECTED LOAD: PHASE A. 7200 W., PHASE B. 7200 W., PHASE C. 8400 W., TOTAL 22800 WATTS

LOCATION	LOAD	№.	A B C	№.	LOAD	LOCATION
RM A325 DESKS,TV,FAN RECP.	1000	1		2	1000	RM A326 DESKS,TV,FAN RECP.
RM A325 RECP.	1000	3		4	1000	RM A326 RECP.
RM A325 MW & CNTR TOP RECP.	700	5		6	700	RM A326 MW & CNTR TOP RECP.
RM A325 REFRIG RECP.	500	7		8	500	RM A326 REFRIG RECP.
RM A325 TOILET RECP.	400	9		10	400	RM A326 TOILET RECP.
RM A327 DESKS,TV,FAN RECP.	1000	11		12	1000	RM A328 DESKS,TV,FAN RECP.
RM A327 RECP.	1000	13		14	1000	RM A328 RECP.
RM A327 MW & CNTR TOP RECP.	700	15		16	700	RM A328 MW & CNTR TOP RECP.
RM A327 REFRIG RECP.	500	17		18	500	RM A328 REFRIG RECP.
RM A327 TOILET RECP.	400	19		20	400	RM A328 TOILET RECP.
RM A329 DESKS,TV,FAN RECP.	1000	21		22	1000	RM A330 DESKS,TV,FAN RECP.
RM A329 RECP.	1000	23		24	1000	RM A330 RECP.
RM A329 MW & CNTR TOP RECP.	700	25		26	700	RM A330 MW & CNTR TOP RECP.
RM A329 REFRIG RECP.	500	27		28	500	RM A330 REFRIG RECP.
RM A329 TOILET RECP.	400	29		30	400	RM A330 TOILET RECP.
SPARE		31		32		SPARE
SPARE		33		34		SPARE
SPARE		35		36		SPARE
SPARE		37		38		SPARE
SPARE		39		40		SPARE
RM A325,26,27,28,29&30 LTG	1200	41		42		SPARE

LOCATED IN BEQ "A" ATTIC

PANEL SCHEDULE "PP19"

VOLTAGE: □ 120/208V, 3PH, 4 WIRE ■ 208V, 3PH, 3 WIRE □ 277/480V, 3PH, 4 WIRE □ 480V, 3PH, 3 WIRE

MOUNTING: □ FLUSH ■ SURFACE | MAINS: □ LUGS ONLY ■ MAIN BREAKER 500 AMP. AMP. BUS □ TOP ■ BOTTOM | NEUTRAL: □ 50% □ 100%

COVER: ■ DOOR WITH LOCK □ DOOR WITHOUT LOCK | ALL BRANCH BREAKERS 20A, 1P UNLESS NOTED U/L LISTED BREAKER INTERRUPTING CAPACITY: 22000 RMS SYM. AMPS.

CONNECTED LOAD: PHASE A. 34500 W., PHASE B. 34500 W., PHASE C. 34500 W., TOTAL 103500 WATTS

LOCATION	LOAD	№.	A B C	№.	LOAD	LOCATION
PTHP-001 SUPPLY FAN	1700	1	30 30	2	1700	PTHP-002 SUPPLY FAN
PTHP-001 SUPPLY FAN	1700	3		4	1700	PTHP-002 SUPPLY FAN
PTHP-001 SUPPLY FAN	1700	5		6	1700	PTHP-002 SUPPLY FAN
PTHP-001 EXHAUST FAN	1000	7		8	700	PTHP-002 EXHAUST FAN
PTHP-001 EXHAUST FAN	1000	9		10	700	PTHP-002 EXHAUST FAN
PTHP-001 EXHAUST FAN	1000	11		12	700	PTHP-002 EXHAUST FAN
PTHP-001 ENERGY WHEEL	7000	13	60 60	14	7000	PTHP-002 ENERGY WHEEL
PTHP-001 ENERGY WHEEL	7000	15		16	7000	PTHP-002 ENERGY WHEEL
HP-001A HEAT PUMP	7000	17		18	7000	HP-002A HEAT PUMP
HP-001A HEAT PUMP	7000	19		20	7000	HP-002A HEAT PUMP
HP-001B HEAT PUMP	7000	21		22	7000	HP-002B HEAT PUMP
HP-001B HEAT PUMP	7000	23		24	7000	HP-002B HEAT PUMP
P-001 WATER PUMP	700	25		26	700	P-002 WATER PUMP
P-001 WATER PUMP	700	27		28	700	P-002 WATER PUMP
P-001 WATER PUMP	700	29		30	700	P-002 WATER PUMP
SPARE		31		32	500	P-002 WATER PUMP
SPARE		33		34	500	P-002 WATER PUMP
SPARE		35		36	500	P-002 WATER PUMP
SPARE		37		38		SPARE
SPARE		39		40		SPARE
SPARE		41		42		SPARE

LOCATED IN BEQ "B" ATTIC

PANEL SCHEDULE "PP20"

VOLTAGE: □ 120/208V, 3PH, 4 WIRE ■ 208V, 3PH, 3 WIRE □ 277/480V, 3PH, 4 WIRE □ 480V, 3PH, 3 WIRE

MOUNTING: □ FLUSH ■ SURFACE | MAINS: □ LUGS ONLY ■ MAIN BREAKER 500 AMP. AMP. BUS □ TOP ■ BOTTOM | NEUTRAL: □ 50% □ 100%

COVER: ■ DOOR WITH LOCK □ DOOR WITHOUT LOCK | ALL BRANCH BREAKERS 20A, 1P UNLESS NOTED U/L LISTED BREAKER INTERRUPTING CAPACITY: 22000 RMS SYM. AMPS.

CONNECTED LOAD: PHASE A. 33300 W., PHASE B. 33300 W., PHASE C. 33300 W., TOTAL 99900 WATTS

LOCATION	LOAD	№.	A B C	№.	LOAD	LOCATION
PTHP-003 SUPPLY FAN	1700	1	30 30	2	700	PTHP-004 SUPPLY FAN
PTHP-003 SUPPLY FAN	1700	3		4	700	PTHP-004 SUPPLY FAN
PTHP-003 SUPPLY FAN	1700	5		6	700	PTHP-004 SUPPLY FAN
PTHP-003 EXHAUST FAN	700	7		8	500	PTHP-004 EXHAUST FAN
PTHP-003 EXHAUST FAN	700	9		10	500	PTHP-004 EXHAUST FAN
PTHP-003 EXHAUST FAN	700	11		12	500	PTHP-004 EXHAUST FAN
PTHP-003 ENERGY WHEEL	7000	13	60 60	14	7000	PTHP-004 ENERGY WHEEL
PTHP-003 ENERGY WHEEL	7000	15		16	7000	PTHP-004 ENERGY WHEEL
HP-003A HEAT PUMP	7000	17		18	7000	HP-004A HEAT PUMP
HP-003A HEAT PUMP	7000	19		20	7000	HP-004A HEAT PUMP
HP-003B HEAT PUMP	7000	21		22	7000	HP-004B HEAT PUMP
HP-003B HEAT PUMP	7000	23		24	7000	HP-004B HEAT PUMP
P-003 WATER PUMP	700	25		26	500	P-004 WATER PUMP
P-003 WATER PUMP	700	27		28	500	P-004 WATER PUMP
P-003 WATER PUMP	700	29		30	500	P-004 WATER PUMP
SPARE		31		32	500	P-002 EXHAUST FAN
SPARE		33		34	500	P-002 EXHAUST FAN
SPARE		35		36	500	P-002 EXHAUST FAN
SPARE		37		38		SPARE
SPARE		39		40		SPARE
SPARE		41		42		SPARE

LOCATED IN BEQ "C" ATTIC

PANEL SCHEDULE "PP21"

VOLTAGE: □ 120/208V, 3PH, 4 WIRE ■ 208V, 3PH, 3 WIRE □ 277/480V, 3PH, 4 WIRE □ 480V, 3PH, 3 WIRE

MOUNTING: □ FLUSH ■ SURFACE | MAINS: □ LUGS ONLY ■ MAIN BREAKER 500 AMP. AMP. BUS □ TOP ■ BOTTOM | NEUTRAL: □ 50% □ 100%

COVER: ■ DOOR WITH LOCK □ DOOR WITHOUT LOCK | ALL BRANCH BREAKERS 20A, 1P UNLESS NOTED U/L LISTED BREAKER INTERRUPTING CAPACITY: 22000 RMS SYM. AMPS.

CONNECTED LOAD: PHASE A. 33000 W., PHASE B. 33300 W., PHASE C. 33300 W., TOTAL 99900 WATTS

LOCATION	LOAD	№.	A B C	№.	LOAD	LOCATION
PTHP-005 SUPPLY FAN	1700	1	30 30	2	700	PTHP-006 SUPPLY FAN
PTHP-005 SUPPLY FAN	1700	3		4	700	PTHP-006 SUPPLY FAN
PTHP-005 SUPPLY FAN	1700	5		6	700	PTHP-006 SUPPLY FAN
PTHP-005 EXHAUST FAN	700	7		8	500	PTHP-006 EXHAUST FAN
PTHP-005 EXHAUST FAN	700	9		10	500	PTHP-006 EXHAUST FAN
PTHP-005 EXHAUST FAN	700	11		12	500	PTHP-006 EXHAUST FAN
PTHP-005 ENERGY WHEEL	7000	13	60 60	14	7000	PTHP-006 ENERGY WHEEL
PTHP-005 ENERGY WHEEL	7000	15		16	7000	PTHP-006 ENERGY WHEEL
HP-005A HEAT PUMP	7000	17		18	7000	HP-006A HEAT PUMP
HP-005A HEAT PUMP	7000	19		20	7000	HP-006A HEAT PUMP
HP-005B HEAT PUMP	7000	21		22	7000	HP-006B HEAT PUMP
HP-005B HEAT PUMP	7000	23		24	7000	HP-006B HEAT PUMP
P-005 WATER PUMP	700	25		26	500	P-006 WATER PUMP
P-005 WATER PUMP	700	27		28	500	P-006 WATER PUMP
P-005 WATER PUMP	700	29		30	500	P-006 WATER PUMP
SPARE		31		32	500	P-003 EXHAUST FAN
SPARE		33		34	500	P-003 EXHAUST FAN
SPARE		35		36	500	P-003 EXHAUST FAN
SPARE		37		38		SPARE
SPARE		39		40		SPARE
SPARE		41		42		SPARE

JA. JONES ARCHITECT ENGINEER OF THE CAROLINAS
LOCKWOOD GREENE Consulting•Design•Construction

DSGN B. STYRON	DR K. PHELPS	CHK K. WILLIAMS
SUPV C. CARROS	CH ENGR B. STYRON	
SUBMITTED BY (FRM MENGES-TULE)		DATE
TECHNICAL BRANCH	V.P. 03-MAY-1999	
FPE		

DRAWING REVISIONS

Rev.	Description	Prep By	Date	Approvd.
0	FINAL DESIGN SUBMITTAL	BPAYNE	[DRAWN]99	[ESTY]RDN
1	ISSUE FOR RECORD	BVS	01JUN01	

BEAUFORT, S.C.

QUARTERS - PHASE IV

ELECTRICAL

BEQ "A" PANEL SCHEDULES,SHEET 3 OF 3

MCAS BACHELOR ENLISTED QUARTERS

DATE | APPROVED

Naval Facilities Engineering Command
Southern Division
Charleston, South Carolina

RECORD DRAWING DATE

CODE I.D. NO. 80091
DRAWING SIZE: D
SPEC. NO.06-98-0690
CONSTRN. CONTR. NO. N62467-98-D-0690
NAVFAC DRAWING NO. 5364478
SHEET 22 OF 44

ESC-33

DATE | ETD FOR COMMANDER, NAVFAC

$$$$ USERNAME $$$$ $$$$ DATE&TIME $$$$ $$$$ DESIGN FILE NAME $$$$

LOCATED IN BEQ "B" ROOM B122, FIRST FLOOR NORTH ELECTRICAL ROOM

PANEL SCHEDULE "PP7"

VOLTAGE: ■ 120/208V, 3PH, 4 WIRE ☐ 208V, 3PH, 3 WIRE ☐ 277/480V, 3PH, 4 WIRE ☐ 480V, 3PH, 3 WIRE

MOUNTING: ☐ FLUSH ■ SURFACE | MAINS: ☐ LUGS ONLY ■ MAIN BREAKER 150 AMP. | AMP. ■ TOP ☐ BOTTOM | NEUTRAL: ☐ 50% ■ 100%

COVER: ■ DOOR WITH LOCK ☐ DOOR WITHOUT LOCK | ALL BRANCH BREAKERS 20A, 1P UNLESS NOTED U/L LISTED BREAKER INTERRUPTING CAPACITY: 22000 RMS SYM. AMPS.

CONNECTED LOAD: PHASE A. 7200 W., PHASE B. 5400 W., PHASE C. 6000 W., TOTAL 18600 WATTS

LOCATION	LOAD	№.	A B C	№.	LOAD	LOCATION
RM B101 HEAT PUMP WSHP-091	900	1	15	2	900	RM B102 HEAT PUMP WSHP-100
RM B101 HEAT PUMP WSHP-091	900	3	15	4	900	RM B102 HEAT PUMP WSHP-100
RM B103 HEAT PUMP WSHP-092	900	5	15	6	900	RM B104 HEAT PUMP WSHP-099
RM B103 HEAT PUMP WSHP-092	900	7	15	8	900	RM B104 HEAT PUMP WSHP-099
RM B105 HEAT PUMP WSHP-093	900	9	15	10	900	RM B106 HEAT PUMP WSHP-098
RM B105 HEAT PUMP WSHP-093	900	11	15	12	900	RM B106 HEAT PUMP WSHP-098
RM B107 HEAT PUMP WSHP-094	900	13	15	14	900	RM B108 HEAT PUMP WSHP-097
RM B107 HEAT PUMP WSHP-094	900	15	15	16	900	RM B108 HEAT PUMP WSHP-097
RM B109 HEAT PUMP WSHP-095	900	17	15	18	900	RM B110 HEAT PUMP WSHP-096
RM B109 HEAT PUMP WSHP-095	900	19	15	20	900	RM B110 HEAT PUMP WSHP-096
SPARE		21		22		SPARE
SPARE		23		24		SPARE
SPARE		25		26		SPARE
SPARE		27		28		SPARE
SPARE		29		30		SPARE
SPARE		31		32		SPARE
SPARE		33		34		SPARE
SPARE		35		36		SPARE
SPARE		37		38		SPARE
SPARE		39		40		SPARE
RM B121 CIRC. PUMP	600	41		42		SPARE

LOCATED IN BEQ "B" ROOM B124, FIRST FLOOR SOUTH ELECTRICAL ROOM

PANEL SCHEDULE "PP8"

VOLTAGE: ☐ 120/208V, 3PH, 4 WIRE ☐ 208V, 3PH, 3 WIRE ■ 277/480V, 3PH, 4 WIRE ☐ 480V, 3PH, 3 WIRE

MOUNTING: ☐ FLUSH ■ SURFACE | MAINS: ■ LUGS ONLY ☐ MAIN BREAKER 150 AMP. | AMP. ■ TOP ☐ BOTTOM | NEUTRAL: ☐ 50% ■ 100%

COVER: ■ DOOR WITH LOCK ☐ DOOR WITHOUT LOCK | ALL BRANCH BREAKERS 20A, 1P UNLESS NOTED U/L LISTED BREAKER INTERRUPTING CAPACITY: 22000 RMS SYM. AMPS.

CONNECTED LOAD: PHASE A. 7200 W., PHASE B. 5400 W., PHASE C. 6000 W., TOTAL 18600 WATTS

LOCATION	LOAD	№.	A B C	№.	LOAD	LOCATION
RM B111 HEAT PUMP WSHP-101	900	1	15	2	900	RM B112 HEAT PUMP WSHP-110
RM B111 HEAT PUMP WSHP-101	900	3	15	4	900	RM B112 HEAT PUMP WSHP-110
RM B113 HEAT PUMP WSHP-102	900	5	15	6	900	RM B114 HEAT PUMP WSHP-109
RM B113 HEAT PUMP WSHP-102	900	7	15	8	900	RM B114 HEAT PUMP WSHP-109
RM B115 HEAT PUMP WSHP-103	900	9	15	10	900	RM B116 HEAT PUMP WSHP-108
RM B115 HEAT PUMP WSHP-103	900	11	15	12	900	RM B116 HEAT PUMP WSHP-108
RM B117 HEAT PUMP WSHP-104	900	13	15	14	900	RM B118 HEAT PUMP WSHP-107
RM B117 HEAT PUMP WSHP-104	900	15	15	16	900	RM B118 HEAT PUMP WSHP-107
RM B119 HEAT PUMP WSHP-105	900	17	15	18	900	RM B120 HEAT PUMP WSHP-106
RM B119 HEAT PUMP WSHP-105	900	19	15	20	900	RM B120 HEAT PUMP WSHP-106
SPARE		21		22		SPARE
SPARE		23		24		SPARE
SPARE		25		26		SPARE
SPARE		27		28		SPARE
SPARE		29		30		SPARE
SPARE		31		32		SPARE
SPARE		33		34		SPARE
SPARE		35		36		SPARE
SPARE		37		38		SPARE
SPARE		39		40		SPARE
RM B123 CIRC. PUMP	600	41		42		SPARE

LOCATED IN BEQ "B" ROOM B222, SECOND FLOOR NORTH ELECTRICAL ROOM

PANEL SCHEDULE "PP9"

VOLTAGE: ■ 120/208V, 3PH, 4 WIRE ☐ 208V, 3PH, 3 WIRE ☐ 277/480V, 3PH, 4 WIRE ☐ 480V, 3PH, 3 WIRE

MOUNTING: ☐ FLUSH ■ SURFACE | MAINS: ☐ LUGS ONLY ■ MAIN BREAKER 150 AMP. | AMP. ■ TOP ☐ BOTTOM | NEUTRAL: ☐ 50% ■ 100%

COVER: ■ DOOR WITH LOCK ☐ DOOR WITHOUT LOCK | ALL BRANCH BREAKERS 20A, 1P UNLESS NOTED U/L LISTED BREAKER INTERRUPTING CAPACITY: 22000 RMS SYM. AMPS.

CONNECTED LOAD: PHASE A. 7200 W., PHASE B. 5400 W., PHASE C. 5400 W., TOTAL 18000 WATTS

LOCATION	LOAD	№.	A B C	№.	LOAD	LOCATION
RM B201 HEAT PUMP WSHP-111	900	1	15	2	900	RM B202 HEAT PUMP WSHP-014
RM B201 HEAT PUMP WSHP-111	900	3	15	4	900	RM B202 HEAT PUMP WSHP-014
RM B203 HEAT PUMP WSHP-112	900	5	15	6	900	RM B204 HEAT PUMP WSHP-013
RM B203 HEAT PUMP WSHP-112	900	7	15	8	900	RM B204 HEAT PUMP WSHP-013
RM B205 HEAT PUMP WSHP-113	900	9	15	10	900	RM B206 HEAT PUMP WSHP-012
RM B205 HEAT PUMP WSHP-113	900	11	15	12	900	RM B206 HEAT PUMP WSHP-012
RM B207 HEAT PUMP WSHP-114	900	13	15	14	900	RM B208 HEAT PUMP WSHP-011
RM B207 HEAT PUMP WSHP-114	900	15	15	16	900	RM B208 HEAT PUMP WSHP-011
RM B209 HEAT PUMP WSHP-115	900	17	15	18	900	RM B210 HEAT PUMP WSHP-010
RM B209 HEAT PUMP WSHP-115	900	19	15	20	900	RM B210 HEAT PUMP WSHP-010
SPARE		21		22		SPARE
SPARE		23		24		SPARE
SPARE		25		26		SPARE
SPARE		27		28		SPARE
SPARE		29		30		SPARE
SPARE		31		32		SPARE
SPARE		33		34		SPARE
SPARE		35		36		SPARE
SPARE		37		38		SPARE
SPARE		39		40		SPARE
SPARE		41		42		SPARE

LOCATED IN BEQ "B" ROOM B224, SECOND FLOOR SOUTH ELECTRICAL ROOM

PANEL SCHEDULE "PP10"

VOLTAGE: ■ 120/208V, 3PH, 4 WIRE ☐ 208V, 3PH, 3 WIRE ☐ 277/480V, 3PH, 4 WIRE ☐ 480V, 3PH, 3 WIRE

MOUNTING: ☐ FLUSH ■ SURFACE | MAINS: ☐ LUGS ONLY ■ MAIN BREAKER 150 AMP. | AMP. ■ TOP ☐ BOTTOM | NEUTRAL: ☐ 50% ■ 100%

COVER: ■ DOOR WITH LOCK ☐ DOOR WITHOUT LOCK | ALL BRANCH BREAKERS 20A, 1P UNLESS NOTED U/L LISTED BREAKER INTERRUPTING CAPACITY: 22000 RMS SYM. AMPS.

CONNECTED LOAD: PHASE A. 7200 W., PHASE B. 5400 W., PHASE C. 5400 W., TOTAL 18000 WATTS

LOCATION	LOAD	№.	A B C	№.	LOAD	LOCATION
RM B211 HEAT PUMP WSHP-121	900	1	15	2	900	RM B212 HEAT PUMP WSHP-130
RM B211 HEAT PUMP WSHP-121	900	3	15	4	900	RM B212 HEAT PUMP WSHP-130
RM B213 HEAT PUMP WSHP-122	900	5	15	6	900	RM B214 HEAT PUMP WSHP-129
RM B213 HEAT PUMP WSHP-122	900	7	15	8	900	RM B214 HEAT PUMP WSHP-129
RM B215 HEAT PUMP WSHP-123	900	9	15	10	900	RM B216 HEAT PUMP WSHP-128
RM B215 HEAT PUMP WSHP-123	900	11	15	12	900	RM B216 HEAT PUMP WSHP-128
RM B217 HEAT PUMP WSHP-124	900	13	15	14	900	RM B218 HEAT PUMP WSHP-127
RM B217 HEAT PUMP WSHP-124	900	15	15	16	900	RM B218 HEAT PUMP WSHP-127
RM B219 HEAT PUMP WSHP-125	900	17	15	18	900	RM B220 HEAT PUMP WSHP-126
RM B219 HEAT PUMP WSHP-125	900	19	15	20	900	RM B220 HEAT PUMP WSHP-126
SPARE		21		22		SPARE
SPARE		23		24		SPARE
SPARE		25		26		SPARE
SPARE		27		28		SPARE
SPARE		29		30		SPARE
SPARE		31		32		SPARE
SPARE		33		34		SPARE
SPARE		35		36		SPARE
SPARE		37		38		SPARE
SPARE		39		40		SPARE
SPARE		41		42		SPARE

LOCATED IN BEQ "B" ROOM B322, THIRD FLOOR NORTH ELECTRICAL ROOM

PANEL SCHEDULE "PP11"

VOLTAGE: ■ 120/208V, 3PH, 4 WIRE ☐ 208V, 3PH, 3 WIRE ☐ 277/480V, 3PH, 4 WIRE ☐ 480V, 3PH, 3 WIRE

MOUNTING: ☐ FLUSH ■ SURFACE | MAINS: ☐ LUGS ONLY ■ MAIN BREAKER 150 AMP. | AMP. ☐ TOP ■ BOTTOM | NEUTRAL: ☐ 50% ■ 100%

COVER: ■ DOOR WITH LOCK ☐ DOOR WITHOUT LOCK | ALL BRANCH BREAKERS 20A, 1P UNLESS NOTED U/L LISTED BREAKER INTERRUPTING CAPACITY: 22000 RMS SYM. AMPS.

CONNECTED LOAD: PHASE A. 7200 W., PHASE B. 5400 W., PHASE C. 5400 W., TOTAL 18000 WATTS

LOCATION	LOAD	№.	A B C	№.	LOAD	LOCATION
RM B301 HEAT PUMP WSHP-131	900	1	15	2	900	RM B302 HEAT PUMP WSHP-140
RM B301 HEAT PUMP WSHP-131	900	3	15	4	900	RM B302 HEAT PUMP WSHP-140
RM B303 HEAT PUMP WSHP-132	900	5	15	6	900	RM B304 HEAT PUMP WSHP-139
RM B303 HEAT PUMP WSHP-132	900	7	15	8	900	RM B304 HEAT PUMP WSHP-139
RM B305 HEAT PUMP WSHP-133	900	9	15	10	900	RM B306 HEAT PUMP WSHP-138
RM B305 HEAT PUMP WSHP-133	900	11	15	12	900	RM B306 HEAT PUMP WSHP-138
RM B307 HEAT PUMP WSHP-134	900	13	15	14	900	RM B308 HEAT PUMP WSHP-137
RM B307 HEAT PUMP WSHP-134	900	15	15	16	900	RM B308 HEAT PUMP WSHP-137
RM B309 HEAT PUMP WSHP-135	900	17	15	18	900	RM B310 HEAT PUMP WSHP-136
RM B309 HEAT PUMP WSHP-135	900	19	15	20	900	RM B310 HEAT PUMP WSHP-136
SPARE		21		22		SPARE
SPARE		23		24		SPARE
SPARE		25		26		SPARE
SPARE		27		28		SPARE
SPARE		29		30		SPARE
SPARE		31		32		SPARE
SPARE		33		34		SPARE
SPARE		35		36		SPARE
SPARE		37		38		SPARE
SPARE		39		40		SPARE
SPARE		41		42		SPARE

LOCATED IN BEQ "B" ROOM B324, THIRD FLOOR SOUTH ELECTRICAL ROOM

PANEL SCHEDULE "PP12"

VOLTAGE: ■ 120/208V, 3PH, 4 WIRE ☐ 208V, 3PH, 3 WIRE ☐ 277/480V, 3PH, 4 WIRE ☐ 480V, 3PH, 3 WIRE

MOUNTING: ☐ FLUSH ■ SURFACE | MAINS: ☐ LUGS ONLY ■ MAIN BREAKER 150 AMP. | AMP. ■ TOP ☐ BOTTOM | NEUTRAL: ☐ 50% ■ 100%

COVER: ■ DOOR WITH LOCK ☐ DOOR WITHOUT LOCK | ALL BRANCH BREAKERS 20A, 1P UNLESS NOTED U/L LISTED BREAKER INTERRUPTING CAPACITY: 22000 RMS SYM. AMPS.

CONNECTED LOAD: PHASE A. 7200 W., PHASE B. 5400 W., PHASE C. 5400 W., TOTAL 18000 WATTS

LOCATION	LOAD	№.	A B C	№.	LOAD	LOCATION
RM B311 HEAT PUMP WSHP-141	900	1	15	2	900	RM B312 HEAT PUMP WSHP-150
RM B311 HEAT PUMP WSHP-141	900	3	15	4	900	RM B312 HEAT PUMP WSHP-150
RM B313 HEAT PUMP WSHP-142	900	5	15	6	900	RM B314 HEAT PUMP WSHP-149
RM B313 HEAT PUMP WSHP-142	900	7	15	8	900	RM B314 HEAT PUMP WSHP-149
RM B315 HEAT PUMP WSHP-143	900	9	15	10	900	RM B316 HEAT PUMP WSHP-148
RM B315 HEAT PUMP WSHP-143	900	11	15	12	900	RM B316 HEAT PUMP WSHP-148
RM B317 HEAT PUMP WSHP-144	900	13	15	14	900	RM B318 HEAT PUMP WSHP-147
RM B317 HEAT PUMP WSHP-144	900	15	15	16	900	RM B318 HEAT PUMP WSHP-147
RM B319 HEAT PUMP WSHP-145	900	17	15	18	900	RM B320 HEAT PUMP WSHP-146
RM B319 HEAT PUMP WSHP-145	900	19	15	20	900	RM B320 HEAT PUMP WSHP-146
SPARE		21		22	900	SPARE
SPARE		23		24	900	SPARE
SPARE		25		26	900	SPARE
SPARE		27		28	900	SPARE
SPARE		29		30	900	SPARE
SPARE		31		32	900	SPARE
SPARE		33		34		SPARE
SPARE		35		36		SPARE
SPARE		37		38		SPARE
SPARE		39		40		SPARE
SPARE		41		42		SPARE

J.A. JONES MANAGEMENT SERVICES | J.A. JONES OF THE CAROLINAS

LOCKWOOD GREENE
Consulting•Design•Construction

DSGN B. STYRON	CHK K. PHELPS	CHK E. WILLIAMS
SUPV C. CARROS	CH ENGR B. STYRON	
SUBMITTED BY (FIRM MEMBER TITLE): V.P. 03-MAY-1999		DATE
TECHNICAL BRANCH		
FPE		

DRAWING REVISIONS

Rev.	Description	Prep By	Date	Approvd.
0	FINAL DESIGN SUBMITTAL	BPAYNE	03MAY99	BSTYRON
1	ISSUE FOR RECORD	BWS	01JUN03	

MCAS BEAUFORT, S.C.

BACHELOR ENLISTED QUARTERS - PHASE IV

ELECTRICAL

BEQ "B" PANEL SCHEDULES, SHEET 1 OF 2

APPROVED

DATE ETD FOR COMMANDER, NAVFAC

Naval Facilities Engineering Command
Southern Division
Charleston, South Carolina

RECORD DRAWING DATE

CODE I.D. NO. 80091
DRAWING SIZE: D
SPEC. NO.06-98-0690
CONSTRN. CONTR. NO. N62467-98-D-0690
NAVFAC DRAWING NO. 5364479
SHEET 23 OF 44

ESC-34

$$$$ USERNAME $$$$ $$$$ DATE&TIME $$$$ $$$$ DESIGN FILE NAME $$$$

LOCATED IN BEQ "B" ROOM B132, FIRST FLOOR NORTH ELECTRICAL ROOM

PANEL SCHEDULE "SP16" VOLTAGE: ■ 120/208V, 3PH, 4 WIRE □ 208V, 3PH, 3 WIRE □ 277/480V, 3PH, 4 WIRE □ 480V, 3PH, 3 WIRE

MOUNTING: □ FLUSH ■ SURFACE | MAINS: □ LUGS ONLY ■ MAIN BREAKER | ■ 100 AMP. BUS ■ TOP 80 AMP. □ BOTTOM | NEUTRAL: □ 50% ■ 100%

COVER: ■ DOOR WITH LOCK □ DOOR WITHOUT LOCK | ALL BRANCH BREAKERS 20A, 1P UNLESS NOTED U/L LISTED BREAKER INTERRUPTING CAPACITY: 22000 RMS SYM. AMPS.

CONNECTED LOAD: PHASE A. 7800 W., PHASE B. 7400 W., PHASE C. 8400 W., TOTAL 23600 WATTS

LOCATION	LOAD	№.	A B C	№.	LOAD	LOCATION
RM B101 DESKS,TV,FAN RECP.	1000	1		2	1000	RM B102 DESKS,TV,FAN RECP.
RM B101 RECP.	1000	3		4	1000	RM B102 RECP.
RM B101 MW & CNTR TOP RECP.	700	5		6	700	RM B102 MW & CNTR TOP RECP.
RM B101 REFRIG RECP.	500	7		8	500	RM B102 REFRIG RECP.
RM B101 TOILET RECP.	400	9		10	400	RM B102 TOILET RECP.
RM B103 DESKS,TV,FAN RECP.	1000	11		12	1000	RM B104 DESKS,TV,FAN RECP.
RM B103 RECP.	1000	13		14	1000	RM B104 RECP.
RM B103 MW & CNTR TOP RECP.	700	15		16	700	RM B104 MW & CNTR TOP RECP.
RM B103 REFRIG RECP.	500	17		18	500	RM B104 REFRIG RECP.
RM B103 TOILET RECP.	400	19		20	400	RM B104 TOILET RECP.
RM B105 DESKS,TV,FAN RECP.	1000	21		22	1000	RM B106 DESKS,TV,FAN RECP.
RM B105 RECP.	1000	23		24	1000	RM B106 RECP.
RM B105 MW & CNTR TOP RECP.	700	25		26	700	RM B106 MW & CNTR TOP RECP.
RM B105 REFRIG RECP.	500	27		28	500	RM B106 REFRIG RECP.
RM B105 TOILET RECP.	400	29		30	400	RM B106 TOILET RECP.
SPARE		31		32		SPARE
SPARE		33		34		SPARE
SPARE		35		36		SPARE
PARKING LOT LIGHTING	600	37		38		SPARE
LIGHTING CONTACTOR	200	39		40		SPARE
RM B101,2,3,4,5 & 6 LTG	1200	41		42		SPARE

LOCATED IN BEQ "B" ROOM B132, FIRST FLOOR NORTH ELECTRICAL ROOM

PANEL SCHEDULE "SP17" VOLTAGE: ■ 120/208V, 3PH, 4 WIRE □ 208V, 3PH, 3 WIRE □ 277/480V, 3PH, 4 WIRE □ 480V, 3PH, 3 WIRE

MOUNTING: □ FLUSH ■ SURFACE | MAINS: □ LUGS ONLY ■ MAIN BREAKER | ■ 100 AMP. BUS ■ TOP 80 AMP. □ BOTTOM | NEUTRAL: □ 50% ■ 100%

COVER: ■ DOOR WITH LOCK □ DOOR WITHOUT LOCK | ALL BRANCH BREAKERS 20A, 1P UNLESS NOTED U/L LISTED BREAKER INTERRUPTING CAPACITY: 22000 RMS SYM. AMPS.

CONNECTED LOAD: PHASE A. 8800 W., PHASE B. 8500 W., PHASE C. 8400 W., TOTAL 25700 WATTS

LOCATION	LOAD	№.	A B C	№.	LOAD	LOCATION
RM B107 DESKS,TV,FAN RECP.	1000	1		2	1000	RM B108 DESKS,TV,FAN RECP.
RM B107 RECP.	1000	3		4	1000	RM B108 RECP.
RM B107 MW & CNTR TOP RECP.	700	5		6	700	RM B108 MW & CNTR TOP RECP.
RM B107 REFRIG RECP.	500	7		8	500	RM B108 REFRIG RECP.
RM B107 TOILET RECP.	400	9		10	400	RM B108 TOILET RECP.
RM B109 DESKS,TV,FAN RECP.	1000	11		12	1000	RM B110 DESKS,TV,FAN RECP.
RM B109 RECP.	1000	13		14	1000	RM B110 RECP.
RM B109 MW & CNTR TOP RECP.	700	15		16	700	RM B110 MW & CNTR TOP RECP.
RM B109 REFRIG RECP.	500	17		18	500	RM B110 REFRIG RECP.
RM B109 TOILET RECP.	400	19		20	400	RM B110 TOILET RECP.
RM B111 DESKS,TV,FAN RECP.	1000	21		22	1000	RM B112 DESKS,TV,FAN RECP.
RM B111 RECP.	1000	23		24	1000	RM B112 RECP.
RM B111 MW & CNTR TOP RECP.	700	25		26	700	RM B112 MW & CNTR TOP RECP.
RM B111 REFRIG RECP.	500	27		28	500	RM B112 REFRIG RECP.
RM B111 TOILET RECP.	400	29		30	400	RM B112 TOILET RECP.
RM B121,B122 & B125 RECP.	1000	31		32		SPARE
RM B123 & B124 RECP.	800	33		34		SPARE
SPARE		35		36		SPARE
RM B121 THRU B124 LTG	600	37		38		SPARE
1st FL BLDG. PERIMETER LTG	500	39		40		SPARE
RM B107,8,9,10,11 & 12 LTG	1200	41		42		SPARE

LOCATED IN BEQ "B" ROOM B134, FIRST FLOOR SOUTH ELECTRICAL ROOM

PANEL SCHEDULE "SP18" VOLTAGE: ■ 120/208V, 3PH, 4 WIRE □ 208V, 3PH, 3 WIRE □ 277/480V, 3PH, 4 WIRE □ 480V, 3PH, 3 WIRE

MOUNTING: □ FLUSH ■ SURFACE | MAINS: □ LUGS ONLY ■ MAIN BREAKER | ■ 100 AMP. BUS ■ TOP 90 AMP. □ BOTTOM | NEUTRAL: □ 50% ■ 100%

COVER: ■ DOOR WITH LOCK □ DOOR WITHOUT LOCK | ALL BRANCH BREAKERS 20A, 1P UNLESS NOTED U/L LISTED BREAKER INTERRUPTING CAPACITY: 22000 RMS SYM. AMPS.

CONNECTED LOAD: PHASE A. 10100 W., PHASE B. 9800 W., PHASE C. 10200 W., TOTAL 30100 WATTS

LOCATION	LOAD	№.	A B C	№.	LOAD	LOCATION
RM B113 DESKS,TV,FAN RECP.	1000	1		2	1000	RM B114 DESKS,TV,FAN RECP.
RM B113 RECP.	1000	3		4	1000	RM B114 RECP.
RM B113 MW & CNTR TOP RECP.	700	5		6	700	RM B114 MW & CNTR TOP RECP.
RM B113 REFRIG RECP.	500	7		8	500	RM B114 REFRIG RECP.
RM B113 TOILET RECP.	400	9		10	400	RM B114 TOILET RECP.
RM B115 DESKS,TV,FAN RECP.	1000	11		12	1000	RM B116 DESKS,TV,FAN RECP.
RM B115 RECP.	1000	13		14	1000	RM B116 RECP.
RM B115 MW & CNTR TOP RECP.	700	15		16	700	RM B116 MW & CNTR TOP RECP.
RM B115 REFRIG RECP.	500	17		18	500	RM B116 REFRIG RECP.
RM B115 TOILET RECP.	400	19		20	400	RM B116 TOILET RECP.
RM B117 DESKS,TV,FAN RECP.	1000	21		22	1000	RM B118 DESKS,TV,FAN RECP.
RM B117 RECP.	1000	23		24	1000	RM B118 RECP.
RM B117 MW & CNTR TOP RECP.	700	25		26	700	RM B118 MW & CNTR TOP RECP.
RM B117 REFRIG RECP.	500	27		28	500	RM B118 REFRIG RECP.
RM B117 TOILET RECP.	400	29		30	400	RM B118 TOILET RECP.
RM B119 DESKS,TV,FAN RECP.	1000	31		32	1000	RM B114 DESKS,TV,FAN RECP.
RM B119 RECP.	800	33		34	1000	RM B114 RECP.
RM B119 MW & CNTR TOP RECP.	700	35		36	700	RM B114 MW & CNTR TOP RECP.
RM B119 REFRIG RECP.	400	37		38	500	RM B114 REFRIG RECP.
RM B119 TOILET RECP.	400	39		40	400	RM B114 TOILET RECP.
RM B113,15,17 & 19 LTG	800	41		42	800	RM B114,16,18 & 20 LTG

LOCATED IN BEQ "B" ROOM B232, SECOND FLOOR NORTH ELECTRICAL ROOM

PANEL SCHEDULE "SP19" VOLTAGE: ■ 120/208V, 3PH, 4 WIRE □ 208V, 3PH, 3 WIRE □ 277/480V, 3PH, 4 WIRE □ 480V, 3PH, 3 WIRE

MOUNTING: □ FLUSH ■ SURFACE | MAINS: □ LUGS ONLY ■ MAIN BREAKER | ■ 100 AMP. BUS ■ TOP 80 AMP. □ BOTTOM | NEUTRAL: □ 50% ■ 100%

COVER: ■ DOOR WITH LOCK □ DOOR WITHOUT LOCK | ALL BRANCH BREAKERS 20A, 1P UNLESS NOTED U/L LISTED BREAKER INTERRUPTING CAPACITY: 22000 RMS SYM. AMPS.

CONNECTED LOAD: PHASE A. 7200 W., PHASE B. 7200 W., PHASE C. 8400 W., TOTAL 22800 WATTS

LOCATION	LOAD	№.	A B C	№.	LOAD	LOCATION
RM B201 DESKS,TV,FAN RECP.	1000	1		2	1000	RM B202 DESKS,TV,FAN RECP.
RM B201 RECP.	1000	3		4	1000	RM B202 RECP.
RM B201 MW & CNTR TOP RECP.	700	5		6	700	RM B202 MW & CNTR TOP RECP.
RM B201 REFRIG RECP.	500	7		8	500	RM B202 REFRIG RECP.
RM B201 TOILET RECP.	400	9		10	400	RM B202 TOILET RECP.
RM B203 DESKS,TV,FAN RECP.	1000	11		12	1000	RM B204 DESKS,TV,FAN RECP.
RM B203 RECP.	1000	13		14	1000	RM B204 RECP.
RM B203 MW & CNTR TOP RECP.	700	15		16	700	RM B204 MW & CNTR TOP RECP.
RM B203 REFRIG RECP.	500	17		18	500	RM B204 REFRIG RECP.
RM B203 TOILET RECP.	400	19		20	400	RM B204 TOILET RECP.
RM B205 DESKS,TV,FAN RECP.	1000	21		22	1000	RM B206 DESKS,TV,FAN RECP.
RM B205 RECP.	1000	23		24	1000	RM B206 RECP.
RM B205 MW & CNTR TOP RECP.	700	25		26	700	RM B206 MW & CNTR TOP RECP.
RM B205 REFRIG RECP.	500	27		28	500	RM B206 REFRIG RECP.
RM B205 TOILET RECP.	400	29		30	400	RM B206 TOILET RECP.
SPARE		31		32		SPARE
SPARE		33		34		SPARE
SPARE		35		36		SPARE
SPARE		37		38		SPARE
SPARE		39		40		SPARE
RM B201,2,3,4,5 & 6 LTG	1200	41		42		SPARE

LOCATED IN BEQ "B" ROOM B232, SECOND FLOOR NORTH ELECTRICAL ROOM

PANEL SCHEDULE "SP20" VOLTAGE: ■ 120/208V, 3PH, 4 WIRE □ 208V, 3PH, 3 WIRE □ 277/480V, 3PH, 4 WIRE □ 480V, 3PH, 3 WIRE

MOUNTING: □ FLUSH ■ SURFACE | MAINS: □ LUGS ONLY ■ MAIN BREAKER | ■ 100 AMP. BUS ■ TOP 80 AMP. □ BOTTOM | NEUTRAL: □ 50% ■ 100%

COVER: ■ DOOR WITH LOCK □ DOOR WITHOUT LOCK | ALL BRANCH BREAKERS 20A, 1P UNLESS NOTED U/L LISTED BREAKER INTERRUPTING CAPACITY: 22000 RMS SYM. AMPS.

CONNECTED LOAD: PHASE A. 8700 W., PHASE B. 8500 W., PHASE C. 10800 W., TOTAL 28000 WATTS

LOCATION	LOAD	№.	A B C	№.	LOAD	LOCATION
RM B207 DESKS,TV,FAN RECP.	1000	1		2	1000	RM B208 DESKS,TV,FAN RECP.
RM B207 RECP.	1000	3		4	1000	RM B208 RECP.
RM B207 MW & CNTR TOP RECP.	700	5		6	700	RM B208 MW & CNTR TOP RECP.
RM B207 REFRIG RECP.	500	7		8	500	RM B208 REFRIG RECP.
RM B207 TOILET RECP.	400	9		10	400	RM B208 TOILET RECP.
RM B209 DESKS,TV,FAN RECP.	1000	11		12	1000	RM B210 DESKS,TV,FAN RECP.
RM B209 RECP.	1000	13		14	1000	RM B210 RECP.
RM B209 MW & CNTR TOP RECP.	700	15		16	700	RM B210 MW & CNTR TOP RECP.
RM B209 REFRIG RECP.	500	17		18	500	RM B210 REFRIG RECP.
RM B209 TOILET RECP.	400	19		20	400	RM B210 TOILET RECP.
RM B211 DESKS,TV,FAN RECP.	1000	21		22	1000	RM B212 DESKS,TV,FAN RECP.
RM B211 RECP.	1000	23		24	1000	RM B212 RECP.
RM B211 MW & CNTR TOP RECP.	700	25		26	700	RM B212 MW & CNTR TOP RECP.
RM B211 REFRIG RECP.	500	27		28	500	RM B212 REFRIG RECP.
RM B211 TOILET RECP.	400	29		30	400	RM B212 TOILET RECP.
RM B221, B222 & B225 RECP.	1000	31		32		SPARE
RM B223 & B224 RECP.	800	33		34		SPARE
BLDG B LTG INVERTER	2400	35		36		SPARE
RM B221 THRU B224&B226 LTG	500	37		38		SPARE
2nd FL BALCONY & STAIR LTG	500	39		40		SPARE
RM B207,8,9,10,11 & 12 LTG	1200	41		42		SPARE

LOCATED IN BEQ "B" ROOM B234, SECOND FLOOR SOUTH ELECTRICAL ROOM

PANEL SCHEDULE "SP21" VOLTAGE: ■ 120/208V, 3PH, 4 WIRE □ 208V, 3PH, 3 WIRE □ 277/480V, 3PH, 4 WIRE □ 480V, 3PH, 3 WIRE

MOUNTING: □ FLUSH ■ SURFACE | MAINS: □ LUGS ONLY ■ MAIN BREAKER | ■ 100 AMP. BUS ■ TOP 90 AMP. □ BOTTOM | NEUTRAL: □ 50% ■ 100%

COVER: ■ DOOR WITH LOCK □ DOOR WITHOUT LOCK | ALL BRANCH BREAKERS 20A, 1P UNLESS NOTED U/L LISTED BREAKER INTERRUPTING CAPACITY: 22000 RMS SYM. AMPS.

CONNECTED LOAD: PHASE A. 10100 W., PHASE B. 9800 W., PHASE C. 10200 W., TOTAL 30100 WATTS

LOCATION	LOAD	№.	A B C	№.	LOAD	LOCATION
RM B213 DESKS,TV,FAN RECP.	1000	1		2	1000	RM B214 DESKS,TV,FAN RECP.
RM B213 RECP.	1000	3		4	1000	RM B214 RECP.
RM B213 MW & CNTR TOP RECP.	700	5		6	700	RM B214 MW & CNTR TOP RECP.
RM B213 REFRIG RECP.	500	7		8	500	RM B214 REFRIG RECP.
RM B213 TOILET RECP.	400	9		10	400	RM B214 TOILET RECP.
RM B215 DESKS,TV,FAN RECP.	1000	11		12	1000	RM B216 DESKS,TV,FAN RECP.
RM B215 RECP.	1000	13		14	1000	RM B216 RECP.
RM B215 MW & CNTR TOP RECP.	700	15		16	700	RM B216 MW & CNTR TOP RECP.
RM B215 REFRIG RECP.	500	17		18	500	RM B216 REFRIG RECP.
RM B215 TOILET RECP.	400	19		20	400	RM B216 TOILET RECP.
RM B217 DESKS,TV,FAN RECP.	1000	21		22	1000	RM B218 DESKS,TV,FAN RECP.
RM B217 RECP.	1000	23		24	1000	RM B218 RECP.
RM B217 MW & CNTR TOP RECP.	700	25		26	700	RM B218 MW & CNTR TOP RECP.
RM B217 REFRIG RECP.	500	27		28	500	RM B218 REFRIG RECP.
RM B217 TOILET RECP.	400	29		30	400	RM B218 TOILET RECP.
RM B219 DESKS,TV,FAN RECP.	1000	31		32	1000	RM B214 DESKS,TV,FAN RECP.
RM B219 RECP.	800	33		34	1000	RM B214 RECP.
RM B219 MW & CNTR TOP RECP.	700	35		36	700	RM B214 MW & CNTR TOP RECP.
RM B219 REFRIG RECP.	400	37		38	500	RM B214 REFRIG RECP.
RM B219 TOILET RECP.	400	39		40	400	RM B214 TOILET RECP.
RM B213,15,17 & 19 LTG	800	41		42	800	RM B214,16,18 & 20 LTG

LOCATED IN BEQ "B" ROOM B332 THIRD FLOOR NORTH ELECTRICAL ROOM

PANEL SCHEDULE "SP22" VOLTAGE: ■ 120/208V, 3PH, 4 WIRE □ 208V, 3PH, 3 WIRE □ 277/480V, 3PH, 4 WIRE □ 480V, 3PH, 3 WIRE

MOUNTING: □ FLUSH ■ SURFACE | MAINS: □ LUGS ONLY ■ MAIN BREAKER | ■ 100 AMP. BUS ■ TOP 80 AMP. □ BOTTOM | NEUTRAL: □ 50% ■ 100%

COVER: ■ DOOR WITH LOCK □ DOOR WITHOUT LOCK | ALL BRANCH BREAKERS 20A, 1P UNLESS NOTED U/L LISTED BREAKER INTERRUPTING CAPACITY: 22000 RMS SYM. AMPS.

CONNECTED LOAD: PHASE A. 7200 W., PHASE B. 7200 W., PHASE C. 8400 W., TOTAL 22800 WATTS

LOCATION	LOAD	№.	A B C	№.	LOAD	LOCATION
RM B301 DESKS,TV,FAN RECP.	1000	1		2	1000	RM B302 DESKS,TV,FAN RECP.
RM B301 RECP.	1000	3		4	1000	RM B302 RECP.
RM B301 MW & CNTR TOP RECP.	700	5		6	700	RM B302 MW & CNTR TOP RECP.
RM B301 REFRIG RECP.	500	7		8	500	RM B302 REFRIG RECP.
RM B301 TOILET RECP.	400	9		10	400	RM B302 TOILET RECP.
RM B303 DESKS,TV,FAN RECP.	1000	11		12	1000	RM B304 DESKS,TV,FAN RECP.
RM B303 RECP.	1000	13		14	1000	RM B304 RECP.
RM B303 MW & CNTR TOP RECP.	700	15		16	700	RM B304 MW & CNTR TOP RECP.
RM B303 REFRIG RECP.	500	17		18	500	RM B304 REFRIG RECP.
RM B303 TOILET RECP.	400	19		20	400	RM B304 TOILET RECP.
RM B305 DESKS,TV,FAN RECP.	1000	21		22	1000	RM B306 DESKS,TV,FAN RECP.
RM B305 RECP.	1000	23		24	1000	RM B306 RECP.
RM B305 MW & CNTR TOP RECP.	700	25		26	700	RM B306 MW & CNTR TOP RECP.
RM B305 REFRIG RECP.	500	27		28	500	RM B306 REFRIG RECP.
RM B305 TOILET RECP.	400	29		30	400	RM B306 TOILET RECP.
SPARE		31		32		SPARE
SPARE		33		34		SPARE
SPARE		35		36		SPARE
SPARE		37		38		SPARE
SPARE		39		40		SPARE
RM B301,2,3,4,5 & 6 LTG	1200	41		42		SPARE

LOCATED IN BEQ "B" ROOM B332 THIRD FLOOR NORTH ELECTRICAL ROOM

PANEL SCHEDULE "SP23" VOLTAGE: ■ 120/208V, 3PH, 4 WIRE □ 208V, 3PH, 3 WIRE □ 277/480V, 3PH, 4 WIRE □ 480V, 3PH, 3 WIRE

MOUNTING: □ FLUSH ■ SURFACE | MAINS: □ LUGS ONLY ■ MAIN BREAKER | ■ 100 AMP. BUS ■ TOP 80 AMP. □ BOTTOM | NEUTRAL: □ 50% ■ 100%

COVER: ■ DOOR WITH LOCK □ DOOR WITHOUT LOCK | ALL BRANCH BREAKERS 20A, 1P UNLESS NOTED U/L LISTED BREAKER INTERRUPTING CAPACITY: 22000 RMS SYM. AMPS.

CONNECTED LOAD: PHASE A. 8800 W., PHASE B. 9600 W., PHASE C. 8800 W., TOTAL 27200 WATTS

LOCATION	LOAD	№.	A B C	№.	LOAD	LOCATION
RM B307 DESKS,TV,FAN RECP.	1000	1		2	1000	RM B308 DESKS,TV,FAN RECP.
RM B307 RECP.	1000	3		4	1000	RM B308 RECP.
RM B307 MW & CNTR TOP RECP.	700	5		6	700	RM B308 MW & CNTR TOP RECP.
RM B307 REFRIG RECP.	500	7		8	500	RM B308 REFRIG RECP.
RM B307 TOILET RECP.	400	9		10	400	RM B308 TOILET RECP.
RM B309 DESKS,TV,FAN RECP.	1000	11		12	1000	RM B310 DESKS,TV,FAN RECP.
RM B309 RECP.	1000	13		14	1000	RM B310 RECP.
RM B309 MW & CNTR TOP RECP.	700	15		16	700	RM B310 MW & CNTR TOP RECP.
RM B309 REFRIG RECP.	500	17		18	500	RM B310 REFRIG RECP.
RM B309 TOILET RECP.	400	19		20	400	RM B310 TOILET RECP.
RM B311 DESKS,TV,FAN RECP.	1000	21		22	1000	RM B312 DESKS,TV,FAN RECP.
RM B311 RECP.	1000	23		24	1000	RM B312 RECP.
RM B311 MW & CNTR TOP RECP.	700	25		26	700	RM B312 MW & CNTR TOP RECP.
RM B311 REFRIG RECP.	500	27		28	500	RM B312 REFRIG RECP.
RM B311 TOILET RECP.	400	29		30	400	RM B312 TOILET RECP.
RM B321,B322 & B325 RECP.	1000	31		32		SPARE
RM B323 & B324 RECP.	800	33		34		SPARE
SPARE		35		36		SPARE
RM B321 THRU B324 LTG	600	37		38		SPARE
3rd FL BALCONY & STAIR LTG	500	39		40	1100	RM B401 LTG
RM B307,8,9,10,11 & 12 LTG	1200	41		42	400	RM B401 RECP.

LOCATED IN BEQ "B" ROOM B334 THIRD FLOOR SOUTH ELECTRICAL ROOM

PANEL SCHEDULE "SP24" VOLTAGE: ■ 120/208V, 3PH, 4 WIRE □ 208V, 3PH, 3 WIRE □ 277/480V, 3PH, 4 WIRE □ 480V, 3PH, 3 WIRE

MOUNTING: □ FLUSH ■ SURFACE | MAINS: □ LUGS ONLY ■ MAIN BREAKER | ■ 100 AMP. BUS ■ TOP 90 AMP. □ BOTTOM | NEUTRAL: □ 50% ■ 100%

COVER: ■ DOOR WITH LOCK □ DOOR WITHOUT LOCK | ALL BRANCH BREAKERS 20A, 1P UNLESS NOTED U/L LISTED BREAKER INTERRUPTING CAPACITY: 22000 RMS SYM. AMPS.

CONNECTED LOAD: PHASE A. 10100 W., PHASE B. 9800 W., PHASE C. 10200 W., TOTAL 30100 WATTS

LOCATION	LOAD	№.	A B C	№.	LOAD	LOCATION
RM B313 DESKS,TV,FAN RECP.	1000	1		2	1000	RM B314 DESKS,TV,FAN RECP.
RM B313 RECP.	1000	3		4	1000	RM B314 RECP.
RM B313 MW & CNTR TOP RECP.	700	5		6	700	RM B314 MW & CNTR TOP RECP.
RM B313 REFRIG RECP.	500	7		8	500	RM B314 REFRIG RECP.
RM B313 TOILET RECP.	400	9		10	400	RM B314 TOILET RECP.
RM B315 DESKS,TV,FAN RECP.	1000	11		12	1000	RM B316 DESKS,TV,FAN RECP.
RM B315 RECP.	1000	13		14	1000	RM B316 RECP.
RM B315 MW & CNTR TOP RECP.	700	15		16	700	RM B316 MW & CNTR TOP RECP.
RM B315 REFRIG RECP.	500	17		18	500	RM B316 REFRIG RECP.
RM B315 TOILET RECP.	400	19		20	400	RM B316 TOILET RECP.
RM B317 DESKS,TV,FAN RECP.	1000	21		22	1000	RM B318 DESKS,TV,FAN RECP.
RM B317 RECP.	1000	23		24	1000	RM B318 RECP.
RM B317 MW & CNTR TOP RECP.	700	25		26	700	RM B318 MW & CNTR TOP RECP.
RM B317 REFRIG RECP.	500	27		28	500	RM B318 REFRIG RECP.
RM B317 TOILET RECP.	400	29		30	400	RM B318 TOILET RECP.
RM B319 DESKS,TV,FAN RECP.	1000	31		32	1000	RM B314 DESKS,TV,FAN RECP.
RM B319 RECP.	800	33		34	1000	RM B314 RECP.
RM B319 MW & CNTR TOP RECP.	700	35		36	700	RM B314 MW & CNTR TOP RECP.
RM B319 REFRIG RECP.	400	37		38	500	RM B314 REFRIG RECP.
RM B319 TOILET RECP.	400	39		40	400	RM B314 TOILET RECP.
RM B313,15,17 & 19 LTG	800	41		42	800	RM B314,16,18 & 20 LTG

JA. JONES / JA. JONES ARCHITECTURE ENGINEERS OF THE CAROLINAS

LOCKWOOD GREENE
Consulting·Design·Construction

DSGN B. STYRON	DR K. PHELPS	CHK K. WILLIAMS
SUPV C. CARROLS	CH ENGR B. STYRON	
SUBMITTED BY (FIRM MEMBER TITLE): *Roy Stone* V.P.		03-MAY-1999 DATE
TECHNICAL BRANCH		
FPG		

DRAWING REVISIONS

Rev.	Description	Prep By	Date	Approvd.
0	FINAL DESIGN SUBMITTAL	BPAYNE	[DRAWY99]	[STYRON]
1	ISSUE FOR RECORD	BVS	[01JUN00]	

BEAUFORT, S.C.

QUARTERS - PHASE IV

ELECTRICAL

BEQ "B" PANEL SCHEDULES,SHEET 2 OF 2

MCAS BACHELOR ENLISTED QUARTERS

DATE

APPROVED

Naval Facilities Engineering Command
Southern Division
Charleston, South Carolina

RECORD DRAWING DATE

CODE I.D. NO. 80091

DRAWING SIZE: D

SPEC. NO.06-98-0690

CONSTRN. CONTR. NO. N62467-98-D-0690

NAVFAC DRAWING NO. 5364480

SHEET 24 OF 44

ESC-35

ETD FOR COMMANDER, NAVFAC

DATE

$$$$ USERNAME $$$$ $$$$ DATE&TIME $$$$ $$$$ DESIGN FILE NAME $$$$

LOCATED IN BEQ "C" ROOM C122, FIRST FLOOR NORTH ELECTRICAL ROOM

PANEL SCHEDULE "PP13"

VOLTAGE: ■ 120/208V, 3PH, 4 WIRE □ 208V, 3PH, 3 WIRE □ 277/480V, 3PH, 4 WIRE □ 480V, 3PH, 3 WIRE

MOUNTING: □ FLUSH ■ SURFACE | MAINS: □ LUGS ONLY ■ MAIN BREAKER 150 AMP. | AMP. ■ TOP □ BOTTOM | NEUTRAL: □ 50% ■ 100%

COVER: ■ DOOR WITH LOCK □ DOOR WITHOUT LOCK | ALL BRANCH BREAKERS 20A, 1P UNLESS NOTED U/L LISTED BREAKER INTERRUPTING CAPACITY: 22000 RMS SYM. AMPS.

CONNECTED LOAD: PHASE A. 7200 W., PHASE B. 5400 W., PHASE C. 6000 W., TOTAL 18600 WATTS

LOCATION	LOAD	№.	A B C	№.	LOAD	LOCATION
RM C101 HEAT PUMP WSHP-151	900	1		2	900	RM C102 HEAT PUMP WSHP-160
RM C101 HEAT PUMP WSHP-151	900	3		4	900	RM C102 HEAT PUMP WSHP-160
RM C103 HEAT PUMP WSHP-152	900	5		6	900	RM C104 HEAT PUMP WSHP-159
RM C103 HEAT PUMP WSHP-152	900	7		8	900	RM C104 HEAT PUMP WSHP-159
RM C105 HEAT PUMP WSHP-153	900	9		10	900	RM C106 HEAT PUMP WSHP-158
RM C105 HEAT PUMP WSHP-153	900	11		12	900	RM C106 HEAT PUMP WSHP-158
RM C107 HEAT PUMP WSHP-154	900	13		14	900	RM C108 HEAT PUMP WSHP-157
RM C107 HEAT PUMP WSHP-154	900	15		16	900	RM C108 HEAT PUMP WSHP-157
RM C109 HEAT PUMP WSHP-155	900	17		18	900	RM C110 HEAT PUMP WSHP-156
RM C109 HEAT PUMP WSHP-155	900	19		20	900	RM C110 HEAT PUMP WSHP-156
SPARE		21		22		SPARE
SPARE		23		24		SPARE
SPARE		25		26		SPARE
SPARE		27		28		SPARE
SPARE		29		30		SPARE
SPARE		31		32		SPARE
SPARE		33		34		SPARE
SPARE		35		36		SPARE
SPARE		37		38		SPARE
SPARE		39		40		SPARE
RM C121 CIRC. PUMP	600	41		42		SPARE

LOCATED IN BEQ "C" ROOM C124, FIRST FLOOR SOUTH ELECTRICAL ROOM

PANEL SCHEDULE "PP14"

VOLTAGE: ■ 120/208V, 3PH, 4 WIRE □ 208V, 3PH, 3 WIRE □ 277/480V, 3PH, 4 WIRE □ 480V, 3PH, 3 WIRE

MOUNTING: □ FLUSH ■ SURFACE | MAINS: ■ LUGS ONLY □ MAIN BREAKER 150 AMP. | AMP. ■ TOP □ BOTTOM | NEUTRAL: □ 50% ■ 100%

COVER: ■ DOOR WITH LOCK □ DOOR WITHOUT LOCK | ALL BRANCH BREAKERS 20A, 1P UNLESS NOTED U/L LISTED BREAKER INTERRUPTING CAPACITY: 22000 RMS SYM. AMPS.

CONNECTED LOAD: PHASE A. 7200 W., PHASE B. 5400 W., PHASE C. 6000 W., TOTAL 18600 WATTS

LOCATION	LOAD	№.	A B C	№.	LOAD	LOCATION
RM C111 HEAT PUMP WSHP-161	900	1		2	900	RM C112 HEAT PUMP WSHP-170
RM C111 HEAT PUMP WSHP-161	900	3		4	900	RM C112 HEAT PUMP WSHP-170
RM C113 HEAT PUMP WSHP-162	900	5		6	900	RM C114 HEAT PUMP WSHP-169
RM C113 HEAT PUMP WSHP-162	900	7		8	900	RM C114 HEAT PUMP WSHP-169
RM C115 HEAT PUMP WSHP-163	900	9		10	900	RM C116 HEAT PUMP WSHP-168
RM C115 HEAT PUMP WSHP-163	900	11		12	900	RM C116 HEAT PUMP WSHP-168
RM C117 HEAT PUMP WSHP-164	900	13		14	900	RM C118 HEAT PUMP WSHP-167
RM C117 HEAT PUMP WSHP-164	900	15		16	900	RM C118 HEAT PUMP WSHP-167
RM C119 HEAT PUMP WSHP-165	900	17		18	900	RM C120 HEAT PUMP WSHP-166
RM C119 HEAT PUMP WSHP-165	900	19		20	900	RM C120 HEAT PUMP WSHP-166
SPARE		21		22		SPARE
SPARE		23		24		SPARE
SPARE		25		26		SPARE
SPARE		27		28		SPARE
SPARE		29		30		SPARE
SPARE		31		32		SPARE
SPARE		33		34		SPARE
SPARE		35		36		SPARE
SPARE		37		38		SPARE
SPARE		39		40		SPARE
RM C123 CIRC. PUMP	600	41		42		SPARE

LOCATED IN BEQ "C" ROOM C222, SECOND FLOOR NORTH ELECTRICAL ROOM

PANEL SCHEDULE "PP15"

VOLTAGE: ■ 120/208V, 3PH, 4 WIRE □ 208V, 3PH, 3 WIRE □ 277/480V, 3PH, 4 WIRE □ 480V, 3PH, 3 WIRE

MOUNTING: □ FLUSH ■ SURFACE | MAINS: □ LUGS ONLY ■ MAIN BREAKER 150 AMP. | AMP. ■ TOP □ BOTTOM | NEUTRAL: □ 50% ■ 100%

COVER: ■ DOOR WITH LOCK □ DOOR WITHOUT LOCK | ALL BRANCH BREAKERS 20A, 1P UNLESS NOTED U/L LISTED BREAKER INTERRUPTING CAPACITY: 22000 RMS SYM. AMPS.

CONNECTED LOAD: PHASE A. 7200 W., PHASE B. 5400 W., PHASE C. 5400 W., TOTAL 18000 WATTS

LOCATION	LOAD	№.	A B C	№.	LOAD	LOCATION
RM C201 HEAT PUMP WSHP-171	900	1		2	900	RM C202 HEAT PUMP WSHP-180
RM C201 HEAT PUMP WSHP-171	900	3		4	900	RM C202 HEAT PUMP WSHP-180
RM C203 HEAT PUMP WSHP-172	900	5		6	900	RM C204 HEAT PUMP WSHP-179
RM C203 HEAT PUMP WSHP-172	900	7		8	900	RM C204 HEAT PUMP WSHP-179
RM C205 HEAT PUMP WSHP-173	900	9		10	900	RM C206 HEAT PUMP WSHP-178
RM C205 HEAT PUMP WSHP-173	900	11		12	900	RM C206 HEAT PUMP WSHP-178
RM C207 HEAT PUMP WSHP-174	900	13		14	900	RM C208 HEAT PUMP WSHP-177
RM C207 HEAT PUMP WSHP-174	900	15		16	900	RM C208 HEAT PUMP WSHP-177
RM C209 HEAT PUMP WSHP-175	900	17		18	900	RM C210 HEAT PUMP WSHP-176
RM C209 HEAT PUMP WSHP-175	900	19		20	900	RM C210 HEAT PUMP WSHP-176
SPARE		21		22		SPARE
SPARE		23		24		SPARE
SPARE		25		26		SPARE
SPARE		27		28		SPARE
SPARE		29		30		SPARE
SPARE		31		32		SPARE
SPARE		33		34		SPARE
SPARE		35		36		SPARE
SPARE		37		38		SPARE
SPARE		39		40		SPARE
SPARE		41		42		SPARE

LOCATED IN BEQ "C" ROOM C224, SECOND FLOOR SOUTH ELECTRICAL ROOM

PANEL SCHEDULE "PP16"

VOLTAGE: ■ 120/208V, 3PH, 4 WIRE □ 208V, 3PH, 3 WIRE □ 277/480V, 3PH, 4 WIRE □ 480V, 3PH, 3 WIRE

MOUNTING: □ FLUSH ■ SURFACE | MAINS: □ LUGS ONLY ■ MAIN BREAKER 150 AMP. | AMP. ■ TOP □ BOTTOM | NEUTRAL: □ 50% ■ 100%

COVER: ■ DOOR WITH LOCK □ DOOR WITHOUT LOCK | ALL BRANCH BREAKERS 20A, 1P UNLESS NOTED U/L LISTED BREAKER INTERRUPTING CAPACITY: 22000 RMS SYM. AMPS.

CONNECTED LOAD: PHASE A. 7200 W., PHASE B. 5400 W., PHASE C. 5400 W., TOTAL 18000 WATTS

LOCATION	LOAD	№.	A B C	№.	LOAD	LOCATION
RM C211 HEAT PUMP WSHP-181	900	1		2	900	RM C212 HEAT PUMP WSHP-190
RM C211 HEAT PUMP WSHP-181	900	3		4	900	RM C212 HEAT PUMP WSHP-190
RM C213 HEAT PUMP WSHP-182	900	5		6	900	RM C214 HEAT PUMP WSHP-189
RM C213 HEAT PUMP WSHP-182	900	7		8	900	RM C214 HEAT PUMP WSHP-189
RM C215 HEAT PUMP WSHP-183	900	9		10	900	RM C216 HEAT PUMP WSHP-188
RM C215 HEAT PUMP WSHP-183	900	11		12	900	RM C216 HEAT PUMP WSHP-188
RM C217 HEAT PUMP WSHP-184	900	13		14	900	RM C218 HEAT PUMP WSHP-187
RM C217 HEAT PUMP WSHP-184	900	15		16	900	RM C218 HEAT PUMP WSHP-187
RM C219 HEAT PUMP WSHP-185	900	17		18	900	RM C220 HEAT PUMP WSHP-186
RM C219 HEAT PUMP WSHP-185	900	19		20	900	RM C220 HEAT PUMP WSHP-186
SPARE		21		22		SPARE
SPARE		23		24		SPARE
SPARE		25		26		SPARE
SPARE		27		28		SPARE
SPARE		29		30		SPARE
SPARE		31		32		SPARE
SPARE		33		34		SPARE
SPARE		35		36		SPARE
SPARE		37		38		SPARE
SPARE		39		40		SPARE
SPARE		41		42		SPARE

LOCATED IN BEQ "C" ROOM C322, THIRD FLOOR NORTH ELECTRICAL ROOM

PANEL SCHEDULE "PP17"

VOLTAGE: ■ 120/208V, 3PH, 4 WIRE □ 208V, 3PH, 3 WIRE □ 277/480V, 3PH, 4 WIRE □ 480V, 3PH, 3 WIRE

MOUNTING: □ FLUSH ■ SURFACE | MAINS: □ LUGS ONLY ■ MAIN BREAKER 150 AMP. | AMP. □ TOP ■ BOTTOM | NEUTRAL: □ 50% ■ 100%

COVER: ■ DOOR WITH LOCK □ DOOR WITHOUT LOCK | ALL BRANCH BREAKERS 20A, 1P UNLESS NOTED U/L LISTED BREAKER INTERRUPTING CAPACITY: 22000 RMS SYM. AMPS.

CONNECTED LOAD: PHASE A. 7200 W., PHASE B. 5400 W., PHASE C. 5400 W., TOTAL 18000 WATTS

LOCATION	LOAD	№.	A B C	№.	LOAD	LOCATION
RM C301 HEAT PUMP WSHP-191	900	1		2	900	RM C302 HEAT PUMP WSHP-200
RM C301 HEAT PUMP WSHP-191	900	3		4	900	RM C302 HEAT PUMP WSHP-200
RM C303 HEAT PUMP WSHP-192	900	5		6	900	RM C304 HEAT PUMP WSHP-199
RM C303 HEAT PUMP WSHP-192	900	7		8	900	RM C304 HEAT PUMP WSHP-199
RM C305 HEAT PUMP WSHP-193	900	9		10	900	RM C306 HEAT PUMP WSHP-198
RM C305 HEAT PUMP WSHP-193	900	11		12	900	RM C306 HEAT PUMP WSHP-198
RM C307 HEAT PUMP WSHP-194	900	13		14	900	RM C308 HEAT PUMP WSHP-197
RM C307 HEAT PUMP WSHP-194	900	15		16	900	RM C308 HEAT PUMP WSHP-197
RM C309 HEAT PUMP WSHP-195	900	17		18	900	RM C310 HEAT PUMP WSHP-196
RM C309 HEAT PUMP WSHP-195	900	19		20	900	RM C310 HEAT PUMP WSHP-196
SPARE		21		22		SPARE
SPARE		23		24		SPARE
SPARE		25		26		SPARE
SPARE		27		28		SPARE
SPARE		29		30		SPARE
SPARE		31		32		SPARE
SPARE		33		34		SPARE
SPARE		35		36		SPARE
SPARE		37		38		SPARE
SPARE		39		40		SPARE
SPARE		41		42		SPARE

LOCATED IN BEQ "C" ROOM C324, THIRD FLOOR SOUTH ELECTRICAL ROOM

PANEL SCHEDULE "PP18"

VOLTAGE: ■ 120/208V, 3PH, 4 WIRE □ 208V, 3PH, 3 WIRE □ 277/480V, 3PH, 4 WIRE □ 480V, 3PH, 3 WIRE

MOUNTING: □ FLUSH ■ SURFACE | MAINS: □ LUGS ONLY ■ MAIN BREAKER 150 AMP. | AMP. ■ TOP □ BOTTOM | NEUTRAL: □ 50% ■ 100%

COVER: ■ DOOR WITH LOCK □ DOOR WITHOUT LOCK | ALL BRANCH BREAKERS 20A, 1P UNLESS NOTED U/L LISTED BREAKER INTERRUPTING CAPACITY: 22000 RMS SYM. AMPS.

CONNECTED LOAD: PHASE A. 7200 W., PHASE B. 5400 W., PHASE C. 5400 W., TOTAL 18000 WATTS

LOCATION	LOAD	№.	A B C	№.	LOAD	LOCATION
RM C311 HEAT PUMP WSHP-201	900	1		2	900	RM C312 HEAT PUMP WSHP-210
RM C311 HEAT PUMP WSHP-201	900	3		4	900	RM C312 HEAT PUMP WSHP-210
RM C313 HEAT PUMP WSHP-202	900	5		6	900	RM C314 HEAT PUMP WSHP-209
RM C313 HEAT PUMP WSHP-202	900	7		8	900	RM C314 HEAT PUMP WSHP-209
RM C315 HEAT PUMP WSHP-203	900	9		10	900	RM C316 HEAT PUMP WSHP-208
RM C315 HEAT PUMP WSHP-203	900	11		12	900	RM C316 HEAT PUMP WSHP-208
RM C317 HEAT PUMP WSHP-204	900	13		14	900	RM C318 HEAT PUMP WSHP-207
RM C317 HEAT PUMP WSHP-204	900	15		16	900	RM C318 HEAT PUMP WSHP-207
RM C319 HEAT PUMP WSHP-205	900	17		18	900	RM C320 HEAT PUMP WSHP-206
RM C319 HEAT PUMP WSHP-205	900	19		20	900	RM C320 HEAT PUMP WSHP-206
SPARE		21		22		SPARE
SPARE		23		24		SPARE
SPARE		25		26		SPARE
SPARE		27		28		SPARE
SPARE		29		30		SPARE
SPARE		31		32		SPARE
SPARE		33		34		SPARE
SPARE		35		36		SPARE
SPARE		37		38		SPARE
SPARE		39		40		SPARE
SPARE		41		42		SPARE

JA. JONES ENGINEERS OF THE CAROLINAS
LOCKWOOD GREENE
Consulting • Design • Construction

DRAWING REVISIONS

Rev.	Description	Prep By	Date	Approvd.
0	FINAL DESIGN SUBMITTAL	BPAYNE	02MAY99	BSTYRON
1	AS NOTED	APL	15JUL99	BSTYRON
2	ISSUE FOR RECORD	BVS	01JUN01	

DSGN B. STYRON | DR B. PRICE | CHK B. WILLIAMS
SUPV C. CARROS | CH ENGR B. STYRON
SUBMITTED BY (FIRM MEMBER TITLE): V.P. 03-MAY-1999 DATE
TECHNICAL BRANCH
FPE

MCAS BEAUFORT, S.C.

BACHELOR ENLISTED QUARTERS - PHASE IV

ELECTRICAL

BEQ "C" PANEL SCHEDULES, SHEET 1 OF 2

APPROVED

DATE ETD FOR COMMANDER, NAVFAC

Naval Facilities Engineering Command
Southern Division
Charleston, South Carolina

RECORD DRAWING DATE

CODE I.D. NO. 80091
DRAWING SIZE: D
SPEC. NO.06-98-0690
CONSTRN. CONTR. NO. N62467-98-D-0690
NAVFAC DRAWING NO. 536481
SHEET 25 OF 44

ESC-36

$$$$ USERNAME $$$$ $$$$ DATE&TIME $$$$ $$$$ DESIGN FILE NAME $$$$

LOCATED IN BEQ "C" ROOM C132, FIRST FLOOR NORTH ELECTRICAL ROOM

PANEL SCHEDULE "SP25"

VOLTAGE: ■ 120/208V, 3PH, 4 WIRE □ 208V, 3PH, 3 WIRE □ 277/480V, 3PH, 4 WIRE □ 480V, 3PH, 3 WIRE

MOUNTING: □ FLUSH ■ SURFACE | MAINS: □ LUGS ONLY ■ MAIN BREAKER | 100 AMP. BUS ■ TOP 80 AMP. □ BOTTOM | NEUTRAL: □ 50% ■ 100%

COVER: ■ DOOR WITH LOCK □ DOOR WITHOUT LOCK | ALL BRANCH BREAKERS 20A, 1P UNLESS NOTED U/L LISTED BREAKER INTERRUPTING CAPACITY: 22000 RMS SYM. AMPS.

CONNECTED LOAD: PHASE A. 8300 W., PHASE B. 8400 W., PHASE C. 8400 W., TOTAL 25100 WATTS

LOCATION	LOAD	№.	A B C	№.	LOAD	LOCATION
RM C101 DESKS,TV,FAN RECP.	1000	1		2	1000	RM C102 DESKS,TV,FAN RECP.
RM C101 RECP.	1000	3		4	1000	RM C102 RECP.
RM C101 MW & CNTR TOP RECP.	700	5		6	700	RM C102 MW & CNTR TOP RECP.
RM C101 REFRIG RECP.	500	7		8	500	RM C102 REFRIG RECP.
RM C101 TOILET RECP.	400	9		10	400	RM C102 TOILET RECP.
RM C103 DESKS,TV,FAN RECP.	1000	11		12	1000	RM C104 DESKS,TV,FAN RECP.
RM C103 RECP.	1000	13		14	1000	RM C104 RECP.
RM C103 MW & CNTR TOP RECP.	700	15		16	700	RM C104 MW & CNTR TOP RECP.
RM C103 REFRIG RECP.	500	17		18	500	RM C104 REFRIG RECP.
RM C103 TOILET RECP.	400	19		20	400	RM C104 TOILET RECP.
RM C105 DESKS,TV,FAN RECP.	1000	21		22	1000	RM C106 DESKS,TV,FAN RECP.
RM C105 RECP.	1000	23		24	1000	RM C106 RECP.
RM C105 MW & CNTR TOP RECP.	700	25		26	700	RM C106 MW & CNTR TOP RECP.
RM C105 REFRIG RECP.	500	27		28	500	RM C106 REFRIG RECP.
RM C105 TOILET RECP.	400	29		30	400	RM C106 TOILET RECP.
LIGHTING CONTACTOR	200	31		32		SPARE
SPARE		33		34		SPARE
SPARE		35		36		SPARE
PARKING LOT LIGHTING	900	37		38		SPARE
PARKING LOT LIGHTING	1200	39		40		SPARE
RM C101,2,3,4,5 & 6 LTG	1200	41		42		SPARE

LOCATED IN BEQ "C" ROOM C132, FIRST FLOOR NORTH ELECTRICAL ROOM

PANEL SCHEDULE "SP26"

VOLTAGE: ■ 120/208V, 3PH, 4 WIRE □ 208V, 3PH, 3 WIRE □ 277/480V, 3PH, 4 WIRE □ 480V, 3PH, 3 WIRE

MOUNTING: □ FLUSH ■ SURFACE | MAINS: □ LUGS ONLY ■ MAIN BREAKER | 100 AMP. BUS ■ TOP 80 AMP. □ BOTTOM | NEUTRAL: □ 50% ■ 100%

COVER: ■ DOOR WITH LOCK □ DOOR WITHOUT LOCK | ALL BRANCH BREAKERS 20A, 1P UNLESS NOTED U/L LISTED BREAKER INTERRUPTING CAPACITY: 22000 RMS SYM. AMPS.

CONNECTED LOAD: PHASE A. 8800 W., PHASE B. 8500 W., PHASE C. 8400 W., TOTAL 25700 WATTS

LOCATION	LOAD	№.	A B C	№.	LOAD	LOCATION
RM C107 DESKS,TV,FAN RECP.	1000	1		2	1000	RM C108 DESKS,TV,FAN RECP.
RM C107 RECP.	1000	3		4	1000	RM C108 RECP.
RM C107 MW & CNTR TOP RECP.	700	5		6	700	RM C108 MW & CNTR TOP RECP.
RM C107 REFRIG RECP.	500	7		8	500	RM C108 REFRIG RECP.
RM C107 TOILET RECP.	400	9		10	400	RM C108 TOILET RECP.
RM C109 DESKS,TV,FAN RECP.	1000	11		12	1000	RM C110 DESKS,TV,FAN RECP.
RM C109 RECP.	1000	13		14	1000	RM C110 RECP.
RM C109 MW & CNTR TOP RECP.	700	15		16	700	RM C110 MW & CNTR TOP RECP.
RM C109 REFRIG RECP.	500	17		18	500	RM C110 REFRIG RECP.
RM C109 TOILET RECP.	400	19		20	400	RM C110 TOILET RECP.
RM C111 DESKS,TV,FAN RECP.	1000	21		22	1000	RM C112 DESKS,TV,FAN RECP.
RM C111 RECP.	1000	23		24	1000	RM C112 RECP.
RM C111 MW & CNTR TOP RECP.	700	25		26	700	RM C112 MW & CNTR TOP RECP.
RM C111 REFRIG RECP.	500	27		28	500	RM B112 REFRIG RECP.
RM C111 TOILET RECP.	400	29		30	400	RM C112 TOILET RECP.
RM C121,C122 & C125 RECP.	1000	31		32		SPARE
RM C123 & C124 RECP.	800	33		34		SPARE
SPARE		35		36		SPARE
RM C121 THRU C124 LTG	600	37		38		SPARE
1st FL BLDG. PERIMETER LTG	500	39		40		SPARE
RM C107,8,9,10,11 & 12 LTG	1200	41		42		SPARE

LOCATED IN BEQ "C" ROOM C134, FIRST FLOOR SOUTH ELECTRICAL ROOM

PANEL SCHEDULE "SP27"

VOLTAGE: ■ 120/208V, 3PH, 4 WIRE □ 208V, 3PH, 3 WIRE □ 277/480V, 3PH, 4 WIRE □ 480V, 3PH, 3 WIRE

MOUNTING: □ FLUSH ■ SURFACE | MAINS: □ LUGS ONLY ■ MAIN BREAKER | 100 AMP. BUS ■ TOP 80 AMP. □ BOTTOM | NEUTRAL: □ 50% ■ 100%

COVER: ■ DOOR WITH LOCK □ DOOR WITHOUT LOCK | ALL BRANCH BREAKERS 20A, 1P UNLESS NOTED U/L LISTED BREAKER INTERRUPTING CAPACITY: 22000 RMS SYM. AMPS.

CONNECTED LOAD: PHASE A. 10100 W., PHASE B. 9800 W., PHASE C. 10200 W., TOTAL 30100 WATTS

LOCATION	LOAD	№.	A B C	№.	LOAD	LOCATION
RM C113 DESKS,TV,FAN RECP.	1000	1		2	1000	RM C114 DESKS,TV,FAN RECP.
RM C113 RECP.	1000	3		4	1000	RM C114 RECP.
RM C113 MW & CNTR TOP RECP.	700	5		6	700	RM C114 MW & CNTR TOP RECP.
RM C113 REFRIG RECP.	500	7		8	500	RM C114 REFRIG RECP.
RM C113 TOILET RECP.	400	9		10	400	RM C114 TOILET RECP.
RM C115 DESKS,TV,FAN RECP.	1000	11		12	1000	RM C116 DESKS,TV,FAN RECP.
RM C115 RECP.	1000	13		14	1000	RM C116 RECP.
RM C115 MW & CNTR TOP RECP.	700	15		16	700	RM C116 MW & CNTR TOP RECP.
RM C115 REFRIG RECP.	500	17		18	500	RM C116 REFRIG RECP.
RM C115 TOILET RECP.	400	19		20	400	RM C116 TOILET RECP.
RM C117 DESKS,TV,FAN RECP.	1000	21		22	1000	RM C118 DESKS,TV,FAN RECP.
RM C117 RECP.	1000	23		24	1000	RM C118 RECP.
RM C117 MW & CNTR TOP RECP.	700	25		26	700	RM C118 MW & CNTR TOP RECP.
RM C117 REFRIG RECP.	500	27		28	500	RM C118 REFRIG RECP.
RM C117 TOILET RECP.	400	29		30	400	RM C118 TOILET RECP.
RM C119 DESKS,TV,FAN RECP.	1000	31		32	1000	RM C114 DESKS,TV,FAN RECP.
RM C119 RECP.	800	33		34	1000	RM C114 RECP.
RM C119 MW & CNTR TOP RECP.	700	35		36	700	RM C114 MW & CNTR TOP RECP.
RM C119 REFRIG RECP.	400	37		38	500	RM C114 REFRIG RECP.
RM C119 TOILET RECP.	400	39		40	400	RM C114 TOILET RECP.
RM C113,15,17 & 19 LTG	800	41		42	800	RM C114,16,18 & 20 LTG

LOCATED IN BEQ "C" ROOM C232, SECOND FLOOR NORTH ELECTRICAL ROOM

PANEL SCHEDULE "SP28"

VOLTAGE: ■ 120/208V, 3PH, 4 WIRE □ 208V, 3PH, 3 WIRE □ 277/480V, 3PH, 4 WIRE □ 480V, 3PH, 3 WIRE

MOUNTING: □ FLUSH ■ SURFACE | MAINS: □ LUGS ONLY ■ MAIN BREAKER | 100 AMP. BUS ■ TOP 80 AMP. □ BOTTOM | NEUTRAL: □ 50% ■ 100%

COVER: ■ DOOR WITH LOCK □ DOOR WITHOUT LOCK | ALL BRANCH BREAKERS 20A, 1P UNLESS NOTED U/L LISTED BREAKER INTERRUPTING CAPACITY: 22000 RMS SYM. AMPS.

CONNECTED LOAD: PHASE A. 7200 W., PHASE B. 7200 W., PHASE C. 8400 W., TOTAL 22800 WATTS

LOCATION	LOAD	№.	A B C	№.	LOAD	LOCATION
RM C201 DESKS,TV,FAN RECP.	1000	1		2	1000	RM C202 DESKS,TV,FAN RECP.
RM C201 RECP.	1000	3		4	1000	RM C202 RECP.
RM C201 MW & CNTR TOP RECP.	700	5		6	700	RM C202 MW & CNTR TOP RECP.
RM C201 REFRIG RECP.	500	7		8	500	RM C202 REFRIG RECP.
RM C201 TOILET RECP.	400	9		10	400	RM C202 TOILET RECP.
RM C203 DESKS,TV,FAN RECP.	1000	11		12	1000	RM C204 DESKS,TV,FAN RECP.
RM C203 RECP.	1000	13		14	1000	RM C204 RECP.
RM C203 MW & CNTR TOP RECP.	700	15		16	700	RM C204 MW & CNTR TOP RECP.
RM C203 REFRIG RECP.	500	17		18	500	RM C204 REFRIG RECP.
RM C203 TOILET RECP.	400	19		20	400	RM C204 TOILET RECP.
RM C205 DESKS,TV,FAN RECP.	1000	21		22	1000	RM C206 DESKS,TV,FAN RECP.
RM C205 RECP.	1000	23		24	1000	RM C206 RECP.
RM C205 MW & CNTR TOP RECP.	700	25		26	700	RM C206 MW & CNTR TOP RECP.
RM C205 REFRIG RECP.	500	27		28	500	RM C206 REFRIG RECP.
RM C205 TOILET RECP.	400	29		30	400	RM C206 TOILET RECP.
SPARE		31		32		SPARE
SPARE		33		34		SPARE
SPARE		35		36		SPARE
SPARE		37		38		SPARE
SPARE		39		40		SPARE
RM C201,2,3,4,5 & 6 LTG	1200	41		42		SPARE

LOCATED IN BEQ "C" ROOM C232, SECOND FLOOR NORTH ELECTRICAL ROOM

PANEL SCHEDULE "SP29"

VOLTAGE: ■ 120/208V, 3PH, 4 WIRE □ 208V, 3PH, 3 WIRE □ 277/480V, 3PH, 4 WIRE □ 480V, 3PH, 3 WIRE

MOUNTING: □ FLUSH ■ SURFACE | MAINS: □ LUGS ONLY ■ MAIN BREAKER | 100 AMP. BUS ■ TOP 80 AMP. □ BOTTOM | NEUTRAL: □ 50% ■ 100%

COVER: ■ DOOR WITH LOCK □ DOOR WITHOUT LOCK | ALL BRANCH BREAKERS 20A, 1P UNLESS NOTED U/L LISTED BREAKER INTERRUPTING CAPACITY: 22000 RMS SYM. AMPS.

CONNECTED LOAD: PHASE A. 8800 W., PHASE B. 8500 W., PHASE C. 10800 W., TOTAL 28100 WATTS

LOCATION	LOAD	№.	A B C	№.	LOAD	LOCATION
RM C207 DESKS,TV,FAN RECP.	1000	1		2	1000	RM C208 DESKS,TV,FAN RECP.
RM C207 RECP.	1000	3		4	1000	RM C208 RECP.
RM C207 MW & CNTR TOP RECP.	700	5		6	700	RM C208 MW & CNTR TOP RECP.
RM C207 REFRIG RECP.	500	7		8	500	RM C208 REFRIG RECP.
RM C207 TOILET RECP.	400	9		10	400	RM C208 TOILET RECP.
RM C209 DESKS,TV,FAN RECP.	1000	11		12	1000	RM C210 DESKS,TV,FAN RECP.
RM C209 RECP.	1000	13		14	1000	RM C210 RECP.
RM C209 MW & CNTR TOP RECP.	700	15		16	700	RM C210 MW & CNTR TOP RECP.
RM C209 REFRIG RECP.	500	17		18	500	RM C210 REFRIG RECP.
RM C209 TOILET RECP.	400	19		20	400	RM C210 TOILET RECP.
RM C211 DESKS,TV,FAN RECP.	1000	21		22	1000	RM C212 DESKS,TV,FAN RECP.
RM C211 RECP.	1000	23		24	1000	RM C212 RECP.
RM C211 MW & CNTR TOP RECP.	700	25		26	700	RM C212 MW & CNTR TOP RECP.
RM C211 REFRIG RECP.	500	27		28	500	RM C212 REFRIG RECP.
RM C211 TOILET RECP.	400	29		30	400	RM C212 TOILET RECP.
RM C221,C222 & C225 RECP.	1000	31		32		SPARE
RM C223 & C224 RECP.	800	33		34		SPARE
BLDG C LTG INVERTER	2400	35	30	36		SPARE
RM C221 THRU 224 & 226 LTG	600	37		38		SPARE
2nd FL BALCONY & STAIR LTG	500	39		40		SPARE
RM C207,8,9,10,11 & 12 LTG	1200	41		42		SPARE

LOCATED IN BEQ "C" ROOM C234, SECOND FLOOR SOUTH ELECTRICAL ROOM

PANEL SCHEDULE "SP30"

VOLTAGE: ■ 120/208V, 3PH, 4 WIRE □ 208V, 3PH, 3 WIRE □ 277/480V, 3PH, 4 WIRE □ 480V, 3PH, 3 WIRE

MOUNTING: □ FLUSH ■ SURFACE | MAINS: □ LUGS ONLY ■ MAIN BREAKER | 100 AMP. BUS ■ TOP 90 AMP. □ BOTTOM | NEUTRAL: □ 50% ■ 100%

COVER: ■ DOOR WITH LOCK □ DOOR WITHOUT LOCK | ALL BRANCH BREAKERS 20A, 1P UNLESS NOTED U/L LISTED BREAKER INTERRUPTING CAPACITY: 22000 RMS SYM. AMPS.

CONNECTED LOAD: PHASE A. 10100 W., PHASE B. 9800 W., PHASE C. 10200 W., TOTAL 30100 WATTS

LOCATION	LOAD	№.	A B C	№.	LOAD	LOCATION
RM C213 DESKS,TV,FAN RECP.	1000	1		2	1000	RM C214 DESKS,TV,FAN RECP.
RM C213 RECP.	1000	3		4	1000	RM C214 RECP.
RM C213 MW & CNTR TOP RECP.	700	5		6	700	RM C214 MW & CNTR TOP RECP.
RM C213 REFRIG RECP.	500	7		8	500	RM C214 REFRIG RECP.
RM C213 TOILET RECP.	400	9		10	400	RM C214 TOILET RECP.
RM C215 DESKS,TV,FAN RECP.	1000	11		12	1000	RM C216 DESKS,TV,FAN RECP.
RM C215 RECP.	1000	13		14	1000	RM C216 RECP.
RM C215 MW & CNTR TOP RECP.	700	15		16	700	RM C216 MW & CNTR TOP RECP.
RM C215 REFRIG RECP.	500	17		18	500	RM C216 REFRIG RECP.
RM C215 TOILET RECP.	400	19		20	400	RM C216 TOILET RECP.
RM C217 DESKS,TV,FAN RECP.	1000	21		22	1000	RM C218 DESKS,TV,FAN RECP.
RM C217 RECP.	1000	23		24	1000	RM C218 RECP.
RM C217 MW & CNTR TOP RECP.	700	25		26	700	RM C218 MW & CNTR TOP RECP.
RM C217 REFRIG RECP.	500	27		28	500	RM C218 REFRIG RECP.
RM C217 TOILET RECP.	400	29		30	400	RM C218 TOILET RECP.
RM C219 DESKS,TV,FAN RECP.	1000	31		32	1000	RM C214 DESKS,TV,FAN RECP.
RM C219 RECP.	800	33		34	1000	RM C214 RECP.
RM C219 MW & CNTR TOP RECP.	700	35		36	700	RM C214 MW & CNTR TOP RECP.
RM C219 REFRIG RECP.	400	37		38	500	RM C214 REFRIG RECP.
RM C219 TOILET RECP.	400	39		40	400	RM C214 TOILET RECP.
RM C213,15,17 & 19 LTG	800	41		42	800	RM C214,16,18 & 20 LTG

LOCATED IN BEQ "C" ROOM C332 THIRD FLOOR NORTH ELECTRICAL ROOM

PANEL SCHEDULE "SP31"

VOLTAGE: ■ 120/208V, 3PH, 4 WIRE □ 208V, 3PH, 3 WIRE □ 277/480V, 3PH, 4 WIRE □ 480V, 3PH, 3 WIRE

MOUNTING: □ FLUSH ■ SURFACE | MAINS: □ LUGS ONLY ■ MAIN BREAKER | 100 AMP. BUS ■ TOP 80 AMP. □ BOTTOM | NEUTRAL: □ 50% ■ 100%

COVER: ■ DOOR WITH LOCK □ DOOR WITHOUT LOCK | ALL BRANCH BREAKERS 20A, 1P UNLESS NOTED U/L LISTED BREAKER INTERRUPTING CAPACITY: 22000 RMS SYM. AMPS.

CONNECTED LOAD: PHASE A. 7200 W., PHASE B. 7200 W., PHASE C. 8400 W., TOTAL 22800 WATTS

LOCATION	LOAD	№.	A B C	№.	LOAD	LOCATION
RM C301 DESKS,TV,FAN RECP.	1000	1		2	1000	RM C302 DESKS,TV,FAN RECP.
RM C301 RECP.	1000	3		4	1000	RM C302 RECP.
RM C301 MW & CNTR TOP RECP.	700	5		6	700	RM C302 MW & CNTR TOP RECP.
RM C301 REFRIG RECP.	500	7		8	500	RM C302 REFRIG RECP.
RM C301 TOILET RECP.	400	9		10	400	RM C302 TOILET RECP.
RM C303 DESKS,TV,FAN RECP.	1000	11		12	1000	RM C304 DESKS,TV,FAN RECP.
RM C303 RECP.	1000	13		14	1000	RM C304 RECP.
RM C303 MW & CNTR TOP RECP.	700	15		16	700	RM C304 MW & CNTR TOP RECP.
RM C303 REFRIG RECP.	500	17		18	500	RM C304 REFRIG RECP.
RM C303 TOILET RECP.	400	19		20	400	RM C304 TOILET RECP.
RM C305 DESKS,TV,FAN RECP.	1000	21		22	1000	RM C306 DESKS,TV,FAN RECP.
RM C305 RECP.	1000	23		24	1000	RM C306 RECP.
RM C305 MW & CNTR TOP RECP.	700	25		26	700	RM C306 MW & CNTR TOP RECP.
RM C305 REFRIG RECP.	500	27		28	500	RM C306 REFRIG RECP.
RM C305 TOILET RECP.	400	29		30	400	RM C306 TOILET RECP.
SPARE		31		32		SPARE
SPARE		33		34		SPARE
SPARE		35		36		SPARE
SPARE		37		38		SPARE
SPARE		39		40		SPARE
RM C301,2,3,4,5 & 6 LTG	1200	41		42		SPARE

LOCATED IN BEQ "C" ROOM C332 THIRD FLOOR NORTH ELECTRICAL ROOM

PANEL SCHEDULE "SP32"

VOLTAGE: ■ 120/208V, 3PH, 4 WIRE □ 208V, 3PH, 3 WIRE □ 277/480V, 3PH, 4 WIRE □ 480V, 3PH, 3 WIRE

MOUNTING: □ FLUSH ■ SURFACE | MAINS: □ LUGS ONLY ■ MAIN BREAKER | 100 AMP. BUS ■ TOP 80 AMP. □ BOTTOM | NEUTRAL: □ 50% ■ 100%

COVER: ■ DOOR WITH LOCK □ DOOR WITHOUT LOCK | ALL BRANCH BREAKERS 20A, 1P UNLESS NOTED U/L LISTED BREAKER INTERRUPTING CAPACITY: 22000 RMS SYM. AMPS.

CONNECTED LOAD: PHASE A. 8800 W., PHASE B. 8500 W., PHASE C. 8800 W., TOTAL 26100 WATTS

LOCATION	LOAD	№.	A B C	№.	LOAD	LOCATION
RM C307 DESKS,TV,FAN RECP.	1000	1		2	1000	RM C308 DESKS,TV,FAN RECP.
RM C307 RECP.	1000	3		4	1000	RM C308 RECP.
RM C307 MW & CNTR TOP RECP.	700	5		6	700	RM C308 MW & CNTR TOP RECP.
RM C307 REFRIG RECP.	500	7		8	500	RM C308 REFRIG RECP.
RM C307 TOILET RECP.	400	9		10	400	RM C308 TOILET RECP.
RM C309 DESKS,TV,FAN RECP.	1000	11		12	1000	RM C310 DESKS,TV,FAN RECP.
RM C309 RECP.	1000	13		14	1000	RM C310 RECP.
RM C309 MW & CNTR TOP RECP.	700	15		16	700	RM C310 MW & CNTR TOP RECP.
RM C309 REFRIG RECP.	500	17		18	500	RM C310 REFRIG RECP.
RM C309 TOILET RECP.	400	19		20	400	RM C310 TOILET RECP.
RM C311 DESKS,TV,FAN RECP.	1000	21		22	1000	RM C312 DESKS,TV,FAN RECP.
RM C311 RECP.	1000	23		24	1000	RM C312 RECP.
RM C311 MW & CNTR TOP RECP.	700	25		26	700	RM C312 MW & CNTR TOP RECP.
RM C311 REFRIG RECP.	500	27		28	500	RM C312 REFRIG RECP.
RM C311 TOILET RECP.	400	29		30	400	RM C312 TOILET RECP.
RM C321,C322 & C235 RECP	1000	31		32		SPARE
RM C323 & C324 RECP.	800	33		34		SPARE
SPARE		35		36		SPARE
RM C321 THRU C324 LTG	600	37		38		SPARE
3rd FL BALCONY & STAIR LTG	500	39		40	1100	RM A401 LTG
RM C307,8,9,10,11 & 12 LTG	1200	41		42	400	RM A401 RECP.

LOCATED IN BEQ "C" ROOM C334 THIRD FLOOR SOUTH ELECTRICAL ROOM

PANEL SCHEDULE "SP33"

VOLTAGE: ■ 120/208V, 3PH, 4 WIRE □ 208V, 3PH, 3 WIRE □ 277/480V, 3PH, 4 WIRE □ 480V, 3PH, 3 WIRE

MOUNTING: □ FLUSH ■ SURFACE | MAINS: □ LUGS ONLY ■ MAIN BREAKER | 100 AMP. BUS ■ TOP 90 AMP. □ BOTTOM | NEUTRAL: □ 50% ■ 100%

COVER: ■ DOOR WITH LOCK □ DOOR WITHOUT LOCK | ALL BRANCH BREAKERS 20A, 1P UNLESS NOTED U/L LISTED BREAKER INTERRUPTING CAPACITY: 22000 RMS SYM. AMPS.

CONNECTED LOAD: PHASE A. 10100 W., PHASE B. 9800 W., PHASE C. 10200 W., TOTAL 30100 WATTS

LOCATION	LOAD	№.	A B C	№.	LOAD	LOCATION
RM C313 DESKS,TV,FAN RECP.	1000	1		2	1000	RM C314 DESKS,TV,FAN RECP.
RM C313 RECP.	1000	3		4	1000	RM C314 RECP.
RM C313 MW & CNTR TOP RECP.	700	5		6	700	RM C314 MW & CNTR TOP RECP.
RM C313 REFRIG RECP.	500	7		8	500	RM C314 REFRIG RECP.
RM C313 TOILET RECP.	400	9		10	400	RM C314 TOILET RECP.
RM C315 DESKS,TV,FAN RECP.	1000	11		12	1000	RM C316 DESKS,TV,FAN RECP.
RM C315 RECP.	1000	13		14	1000	RM C316 RECP.
RM C315 MW & CNTR TOP RECP.	700	15		16	700	RM C316 MW & CNTR TOP RECP.
RM C315 REFRIG RECP.	500	17		18	500	RM C316 REFRIG RECP.
RM C315 TOILET RECP.	400	19		20	400	RM C316 TOILET RECP.
RM C317 DESKS,TV,FAN RECP.	1000	21		22	1000	RM C318 DESKS,TV,FAN RECP.
RM C317 RECP.	1000	23		24	1000	RM C318 RECP.
RM C317 MW & CNTR TOP RECP.	700	25		26	700	RM C318 MW & CNTR TOP RECP.
RM C317 REFRIG RECP.	500	27		28	500	RM C318 REFRIG RECP.
RM C317 TOILET RECP.	400	29		30	400	RM C318 TOILET RECP.
RM C319 DESKS,TV,FAN RECP.	1000	31		32	1000	RM C314 DESKS,TV,FAN RECP.
RM C319 RECP.	800	33		34	1000	RM C314 RECP.
RM C319 MW & CNTR TOP RECP.	700	35		36	700	RM C314 MW & CNTR TOP RECP.
RM C319 REFRIG RECP.	400	37		38	500	RM C314 REFRIG RECP.
RM C319 TOILET RECP.	400	39		40	400	RM C314 TOILET RECP.
RM C313,15,17 & 19 LTG	800	41		42	800	RM C314,16,18 & 20 LTG

JA. JONES / IGLESKI & HARRIS — ARCHITECTS & ENGINEERS — JA. JONES OF THE CAROLINAS

LOCKWOOD GREENE — Consulting • Design • Construction

DSGN B. STYRON	DR B. PRICE	CHK K. WILLIAMS
SUPV C. CARROLS	CH ENGR B. STYRON	
SUBMITTED BY (FIRM MEMBER TITLE): *Roy Stroud* V.P.		DATE 03-MAY-1999
TECHNICAL BRANCH		
FPG		

DRAWING REVISIONS

Rev.	Description	Prep By	Date	Approvd.
0	FINAL DESIGN SUBMITTAL	BPAYNE	[DRAWTP]	BSTYRON
1	ISSUE FOR RECORD	BVS	[BJLANE3]	

BEAUFORT, S.C.

QUARTERS - PHASE IV

ELECTRICAL

BEQ "C" PANEL SCHEDULES,SHEET 2 OF 2

DATE | APPROVED

MCAS

BACHELOR ENLISTED QUARTERS

Naval Facilities Engineering Command
Southern Division
Charleston, South Carolina

RECORD DRAWING DATE

CODE I.D. NO. 80091

DRAWING SIZE: D

SPEC. NO.06-98-0690

CONSTRN. CONTR. NO. N62467-98-D-0690

NAVFAC DRAWING NO. 5364482

SHEET 26 OF 44

ESC-37

ETD FOR COMMANDER, NAVFAC

$$$$ USERNAME $$$$ $$$$ DATE&TIME $$$$ $$$$ DESIGN FILE NAME $$$$

LOCATED IN COMMUNITY CENTER ROOM D113

PANEL SCHEDULE "SP34"

VOLTAGE: ■ 120/208V, 3PH, 4 WIRE ☐ 208V, 3PH, 3 WIRE ☐ 277/480V, 3PH, 4 WIRE ☐ 480V, 3PH, 3 WIRE

MOUNTING: ■ FLUSH ☐ SURFACE | MAINS: ☐ LUGS ONLY ■ MAIN BREAKER 225 AMP. | AMP.BUS ■ TOP ☐ BOTTOM | NEUTRAL: ☐ 50% ■ 100%

COVER: ■ DOOR WITH LOCK ☐ DOOR WITHOUT LOCK | ALL BRANCH BREAKERS 20A, 1P UNLESS NOTED U/L LISTED BREAKER INTERRUPTING CAPACITY: 10K RMS SYM. AMPS.

CONNECTED LOAD: PHASE A. 35400 W., PHASE B. 35400 W., PHASE C. 31200 W., TOTAL 102000 WATTS

LOCATION	LOAD	№.	A B C	№.	LOAD	LOCATION
DRYER	3000	1	20	2	3000	DRYER
DRYER	3000	3		4	3000	DRYER
DRYER	3000	5	20	6	3000	DRYER
DRYER	3000	7		8	3000	DRYER
DRYER	3000	9	20	10	3000	DRYER
DRYER	3000	11		12	3000	DRYER
DRYER	3000	13	20	14	3000	DRYER
DRYER	3000	15		16	3000	DRYER
DRYER	3000	17	20	18	1800	WASHER
DRYER	3000	19		20	1800	WASHER
DRYER	3000	21	20	22	1800	WASHER
DRYER	3000	23		24	1800	WASHER
DRYER	3000	25	20	26	1800	WASHER
DRYER	3000	27		28	1800	WASHER
DRYER	3000	29	20	30	1800	WASHER
DRYER	3000	31		32	1800	WASHER
DRYER	3000	33	20	34	1800	WASHER
DRYER	3000	35		36	1800	WASHER
DRYER	3000	37	20	38		SPACE
DRYER	3000	39		40		SPACE
SPACE		41		42		SPACE

DRYER LOAD 14 UNITS @ 6KW = 84KW X DEMAND FACTOR 40% = 33.6KW
WASHER LOAD 10 UNITS @ 1.8KW 18.0KW
TOTAL 51.6KW

LOCATED IN COMMUNITY CENTER ROOM D113

PANEL SCHEDULE "SP35"

VOLTAGE: ■ 120/208V, 3PH, 4 WIRE ☐ 208V, 3PH, 3 WIRE ☐ 277/480V, 3PH, 4 WIRE ☐ 480V, 3PH, 3 WIRE

MOUNTING: ☐ FLUSH ■ SURFACE | MAINS: ☐ LUGS ONLY ■ MAIN BREAKER 225 AMP. | AMP. ■ TOP ☐ BOTTOM | NEUTRAL: ☐ 50% ■ 100%

COVER: ■ DOOR WITH LOCK ☐ DOOR WITHOUT LOCK | ALL BRANCH BREAKERS 20A, 1P UNLESS NOTED U/L LISTED BREAKER INTERRUPTING CAPACITY: 10KRMS SYM. AMPS.

CONNECTED LOAD: PHASE A. 38400 W., PHASE B. 38400 W., PHASE C. 37200 W., TOTAL 114000 WATTS

LOCATION	LOAD	№.	A B C	№.	LOAD	LOCATION
DRYER	3000	1	20	2	3000	DRYER
DRYER	3000	3		4	3000	DRYER
DRYER	3000	5	20	6	3000	DRYER
DRYER	3000	7		8	3000	DRYER
DRYER	3000	9	20	10	3000	DRYER
DRYER	3000	11		12	3000	DRYER
DRYER	3000	13	20	14	3000	DRYER
DRYER	3000	15		16	3000	DRYER
DRYER	3000	17	20	18	3000	DRYER
DRYER	3000	19		20	3000	DRYER
DRYER	3000	21	20	22	3000	DRYER
DRYER	3000	23		24	3000	DRYER
DRYER	3000	25	20	26	1800	WASHER
DRYER	3000	27		28	1800	WASHER
DRYER	3000	29	20	30	1800	WASHER
DRYER	3000	31		32	1800	WASHER
DRYER	3000	33	20	34	1800	WASHER
DRYER	3000	35		36	1800	WASHER
DRYER	3000	37	20	38	1800	WASHER
DRYER	3000	39		40	1800	WASHER
WASHER	1800	41		42	1800	WASHER

DRYER LOAD 16 UNITS @ 6KW = 96KW X DEMAND FACTOR 40% = 38.4KW
WASHER LOAD 10 UNITS @ 1.8KW 18.0KW
TOTAL 56.4KW

LOCATED IN COMMUNITY CENTER ROOM D113

PANEL SCHEDULE "SP36"

VOLTAGE: ■ 120/208V, 3PH, 4 WIRE ☐ 208V, 3PH, 3 WIRE ☐ 277/480V, 3PH, 4 WIRE ☐ 480V, 3PH, 3 WIRE

MOUNTING: ■ FLUSH ☐ SURFACE | MAINS: ☐ LUGS ONLY ■ MAIN BREAKER 225 AMP. BUS ■ TOP ☐ BOTTOM | NEUTRAL: ☐ 50% ■ 100%

COVER: ■ DOOR WITH LOCK ☐ DOOR WITHOUT LOCK | ALL BRANCH BREAKERS 20A, 1P UNLESS NOTED U/L LISTED BREAKER INTERRUPTING CAPACITY: 10K RMS SYM. AMPS.

CONNECTED LOAD: PHASE A. 35400 W., PHASE B. 35400 W., PHASE C. 31200 W., TOTAL 102000 WATTS

LOCATION	LOAD	№.	A B C	№.	LOAD	LOCATION
DRYER	3000	1	20	2	3000	DRYER
DRYER	3000	3		4	3000	DRYER
DRYER	3000	5	20	6	3000	DRYER
DRYER	3000	7		8	3000	DRYER
DRYER	3000	9	20	10	3000	DRYER
DRYER	3000	11		12	3000	DRYER
DRYER	3000	13	20	14	3000	DRYER
DRYER	3000	15		16	3000	DRYER
DRYER	3000	17	20	18	1800	WASHER
DRYER	3000	19		20	1800	WASHER
DRYER	3000	21	20	22	1800	WASHER
DRYER	3000	23		24	1800	WASHER
DRYER	3000	25	20	26	1800	WASHER
DRYER	3000	27		28	1800	WASHER
DRYER	3000	29	20	30	1800	WASHER
DRYER	3000	31		32	1800	WASHER
DRYER	3000	33	20	34	1800	WASHER
DRYER	3000	35		36	1800	WASHER
DRYER	3000	37	20	38		SPACE
DRYER	3000	39		40		SPACE
SPACE		41		42		SPACE

DRYER LOAD 14 UNITS @ 6KW = 84KW X DEMAND FACTOR 40% = 33.6KW
WASHER LOAD 10 UNITS @ 1.8KW 72KW X DEMAND FACTOR 40% = 18KW
TOTAL 51.6KW

LOCATED IN COMMUNITY CENTER ROOM D113

PANEL SCHEDULE "SP37"

VOLTAGE: ■ 120/208V, 3PH, 4 WIRE ☐ 208V, 3PH, 3 WIRE ☐ 277/480V, 3PH, 4 WIRE ☐ 480V, 3PH, 3 WIRE

MOUNTING: ■ FLUSH ☐ SURFACE | MAINS: ☐ LUGS ONLY ■ MAIN BREAKER 225 AMP. BUS ■ TOP ☐ BOTTOM | NEUTRAL: ☐ 50% ■ 100%

COVER: ■ DOOR WITH LOCK ☐ DOOR WITHOUT LOCK | ALL BRANCH BREAKERS 20A, 1P UNLESS NOTED U/L LISTED BREAKER INTERRUPTING CAPACITY: 10K RMS SYM. AMPS.

CONNECTED LOAD: PHASE A. 38400 W., PHASE B. 31400 W., PHASE C. 37200 W., TOTAL 113000 WATTS

LOCATION	LOAD	№.	A B C	№.	LOAD	LOCATION
DRYER	3000	1	20	2	3000	DRYER
DRYER	3000	3		4	3000	DRYER
DRYER	3000	5	20	6	3000	DRYER
DRYER	3000	7		8	3000	DRYER
DRYER	3000	9	20	10	3000	DRYER
DRYER	3000	11		12	3000	DRYER
DRYER	3000	13	20	14	3000	DRYER
DRYER	3000	15		16	3000	DRYER
DRYER	3000	17	20	18	3000	DRYER
DRYER	3000	19		20	3000	DRYER
DRYER	3000	21	20	22	3000	DRYER
DRYER	3000	23		24	3000	DRYER
DRYER	3000	25	20	26	1800	WASHER
DRYER	3000	27		28	1800	WASHER
DRYER	3000	29	20	30	1800	WASHER
DRYER	3000	31		32	1800	WASHER
DRYER	3000	33	20	34	1800	WASHER
DRYER	3000	35		36	1800	WASHER
DRYER	3000	37	20	38	1800	WASHER
DRYER	2000	39		40	1800	WASHER
WASHER	1800	41		42	1800	WASHER

DRYER LOAD 16 UNITS @ 6KW = 96KW X DEMAND FACTOR 40% = 38.4KW
WASHER LOAD 10 UNITS @ 1.8KW 18.0KW
TOTAL 56.4KW

LOCATED IN COMMUNITY CENTER ROOM D115

PANEL SCHEDULE "SP38"

VOLTAGE: ■ 120/208V, 3PH, 4 WIRE ☐ 208V, 3PH, 3 WIRE ☐ 277/480V, 3PH, 4 WIRE ☐ 480V, 3PH, 3 WIRE

MOUNTING: ■ FLUSH ☐ SURFACE | MAINS: ☐ LUGS ONLY ■ MAIN BREAKER 100 AMP. | AMP. BUS ■ TOP ☐ BOTTOM | NEUTRAL: ☐ 50% ■ 100%

COVER: ■ DOOR WITH LOCK ☐ DOOR WITHOUT LOCK | ALL BRANCH BREAKERS 20A, 1P UNLESS NOTED U/L LISTED BREAKER INTERRUPTING CAPACITY: 10K RMS SYM. AMPS.

CONNECTED LOAD: PHASE A. 5920 W., PHASE B. 6160 W., PHASE C. 5980 W., TOTAL 18060 WATTS

LOCATION	LOAD	№.	A B C	№.	LOAD	LOCATION
GAME/REC. RM. RECEPT.	900	1		2	1680	GAME/REC,TV,/LOUNGE LIGHTING
TV LOUNGE RECEPT.	720	3		4	1540	ADM.,TLTS,COMP.COR.,LIGHTING
EDF	1000	5		6	1260	CENTRAL LAUNDRY LIGHTING
EDF	1000	7		8	300	BLDG. EXTERIOR LIGHTING
COMPUTER RECEPT.	500	9		10	960	COMM. CENTER LTG. INVERTER
COMPUTER RECEPT.	500	11		12	500	TOILET EXHAUST FAN
COMPUTER RECEPT.	500	13		14		SPACE
ADMINSTRATION RECEPT.	900	15		16		SPACE
MECH. RM. RECEPT.	720	17		18		SPACE
LOCKER RECEPT.	540	19		20		SPACE
TOILET RECEPT.	540	21		22		SPACE
VENDING MACHINE	1000	23		24		SPACE
VENDING MACHINE	1000	25		26		SPACE
VENDING MACHINE	1000	27		28		SPACE
LAN P.A. AMP.	1000	29		30		SPACE
SPARE		31		32		SPACE
SPARE		33		34		SPACE
SPARE		35		36		SPACE
SPARE		37		38		SPACE
SPARE		39		40		SPACE
SPARE		41		42		SPACE

J.A. JONES MANAGEMENT SERVICES | J.A. JONES OF THE CAROLINAS
LOCKWOOD GREENE Consulting•Design•Construction

DSGN R. WILLIAMS	DR. J. RIDTHEUSE	CHK R. WILLIAMS
SUPV C. CARROS	CH. ENGR B. STYRON	
SUBMITTED BY (FIRM MEMBER TITLE)		DATE
TECHNICAL BRANCH	V.P. 03-MAY-1999	

DRAWING REVISIONS

Rev.	Description	Prep By	Date	Approvd.
0	FINAL DESIGN SUBMITTAL	BPAYNE	03MAY99	BSTYRON
1	ISSUE FOR RECORD	BWS	01JUN01	

MCAS BEAUFORT, S.C.

BACHELOR ENLISTED QUARTERS - PHASE IV

ELECTRICAL PANEL SCHEDULES

APPROVED | DATE

ETD FOR COMMANDER, NAVFAC

Naval Facilities Engineering Command
Southern Division
Charleston, South Carolina

RECORD DRAWING DATE

CODE I.D. NO. 80091
DRAWING SIZE: D
SPEC. NO.06-98-0690
CONSTRN. CONTR. NO. N62467-98-D-0690
NAVFAC DRAWING NO. 5364483
SHEET 27 OF 44

ESC-38

$$$$ USERNAME $$$$ $$$$ DATE&TIME $$$$ $$$$ DESIGN FILE NAME $$$$

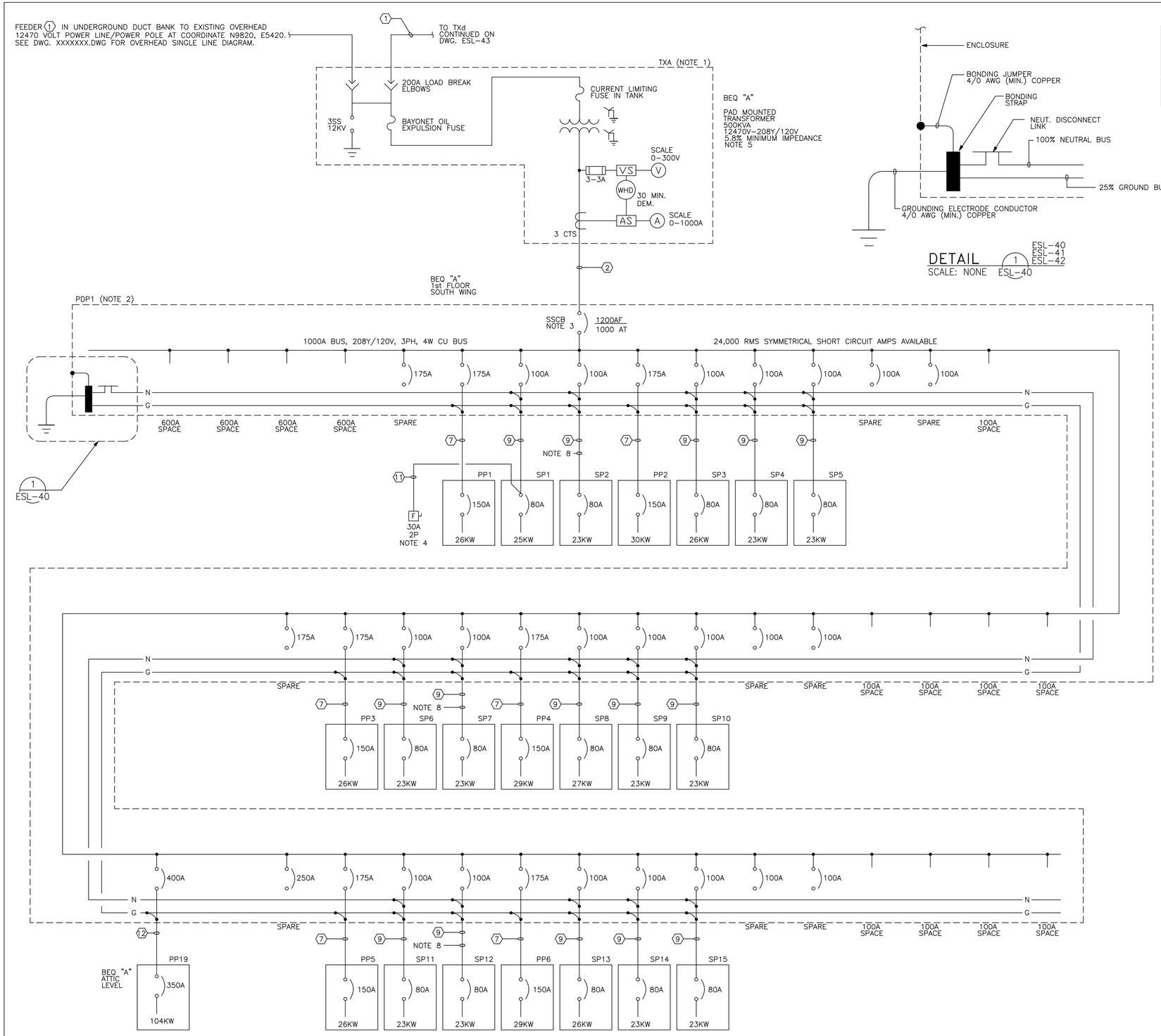

MAIN BREAKER SETTINGS

LOAD CENTER	FRAME SIZE	LONG TIME CURRENT	LONG TIME PICK-UP	LONG TIME DELAY	SHORT TIME DELAY	INSTAN-TANEOUS TRIP

CONDUIT AND CABLE SCHEDULE

FEEDER	QUANTITY AND AWG WIRE SIZE (600V U.N.O.)	C-SIZE INCHES & QTY	NOTES
1	4-#2/0 AL, 15KV, EPR 133% INSULATION (3 PHASE WIRES, 1 NEUTRAL WIRE) WITH #2 AL GROUND CONDUCTOR	5" DUCT BANK	12470V PRIMARY, SEE SITE PLAN ESW-01 FOR CONFIGURATION AND ROUTING, DUCT BANK TO BE PVC CONCRETE ENCASED 2-WAY, 1X2
2	4 (4-500Kcmil, 1#1/0G)	6-5" DUCT BANK	DUCT BANK TO BE PVC CONCRETE ENCASED 6-WAY, 2x3 WITH TWO BOTTOM DUCTS TO BE SPARES
3	4 (4-500Kcmil)	6-4" DUCT BANK	DUCT BANK TO BE PVC CONCRETE ENCASED 6-WAY, 2x3 WITH CENTER TOP AND BOTTOM DUCTS TO BE SPARES
4	3 (4-350Kcmil, 1#1/0G)	3-3"	
5	2 (4-500Kcmil, 1#2G)	2-3 1/2"	
6	4-500Kcmil, 1#4G	3"	
7	3-#4/0, 1#6G	2"	
8	3-#2/0, 1#6G	1 1/2"	
9	4-#1/0, 1#6G	1 1/2"	
10	3-#6, 1#10G	3/4"	
11	2-#10, 1#10G	3/4"	FIRE ALARM CIRCUIT
12	2 (3-#3/0, 1#3G)	2-2"	
13	3-#10, 1#10G	3/4"	
14	4-#4, 1#10G	1 1/2"	
15	4-#3/0, 1#6G	2"	
16	2-#12, 1#12G	2"	PVC, DIRECT BURIAL
17	2-#10,1#12G	2"	PVC, DIRECT BURIAL
18	3-#12, 1#12G	3/4"	
19	3-#2, 1#8G	1 1/2"	

NOTES:

1. TRANSFORMER ENCLOSURE SHALL BE GROUNDED.
2. PANELBOARD TO BE LABELED "SUITABLE FOR USE AS SERVICE EQUIPMENT.
3. SOLID STATE CIRCUIT BREAKER WITH LONG-TIME, SHORT-TIME & INSTANTANEOUS TRIP FUNCTION CHARACTERISTICS. CIRCUIT BREAKER TO BE 100% RATED WITHIN GROUP MOUNTED CONSTRUCTION.
4. CONNECT FIRE ALARM PANEL POWER AHEAD OF SP38 MAIN BREAKER. REFER TO FIRE ALARM RISER DIAGRAM ESL-47 FOR F.A. PANEL CONNECTIONS.
5. TRANSFORMER TO BE OIL-FILLED, THREE-PHASE, 60°C AVERAGE WINDING RISE OVER 30°C AVERAGE AMBIENT, 95KV BIL, LOOP FEED WITH TAPS, COMMERCIAL PAD MOUNT TYPE TRANSFORMER.
6. NOT USED
7. ALL CONDUITS RIGID STEEL UNLESS UNLESS NOTED OTHERWISE.
8. USE 2" CONDUIT FOR UNDERGROUND PORTION OF CABLE ROUTE.

J.A. JONES MANAGEMENT SERVICES, INC. OF THE CAROLINAS
LOCKWOOD GREENE Consulting Design Construction

DESIGN: G. WEBB | DR: J. RIDHOUSE | CHK: B. STYRON
SUPV: C. CARROS | CH ENGR: B. STYRON
SUBMITTED BY (FIRM MANAGER, TITLE): V.P. | DATE: 03-MAY-1999
TECHNICAL BRANCH | FPE

DRAWING REVISIONS

Rev.	Description	Prep By	Date	Apprvd.
0	FINAL DESIGN SUBMITTAL	B.PAYNE	02MAY99	B.STYRON
1	AS NOTED	MPL	15JUL99	B.STYRON
2	ISSUE FOR RECORD	BWS	01JUN01	

MCAS BEAUFORT, S.C.
BACHELOR ENLISTED QUARTERS - PHASE IV
ELECTRICAL
BEQ "A" SINGLE LINE DIAGRAM, SHEET 1 OF 4
APPROVED
DATE
EFD FOR COMMANDER, NAVFAC

Naval Facilities Engineering Command
Southern Division
Charleston, South Carolina

RECORD DRAWING DATE

CODE I.D. NO. 80091
DRAWING SIZE: D
SPEC. NO.06-98-0690
CONSTRN. CONTR. NO. N62467-98-D-0690
NAVFAC DRAWING NO. 5364484
SHEET 28 OF 44
ESL-40

$$$$ USERNAME $$$$ $$$$ DATE&TIME $$$$ $$$$ DESIGN FILE NAME $$$$

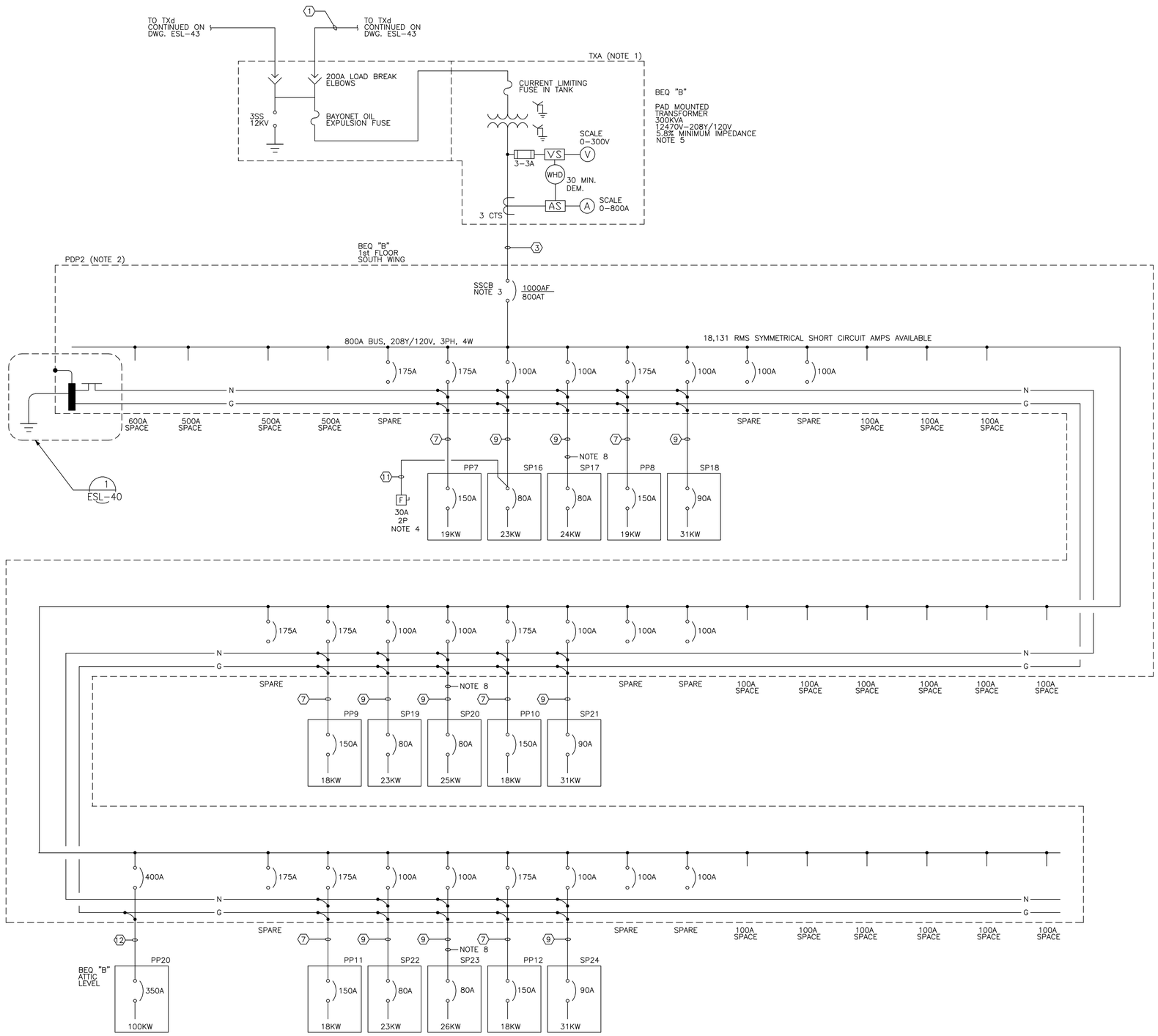

MAIN BREAKER SETTINGS						
LOAD CENTER	FRAME SIZE	LONG TIME CURRENT	LONG TIME PICK-UP	LONG TIME DELAY	SHORT TIME DELAY	INSTAN-TANEOUS TRIP

CONDUIT AND CABLE SCHEDULE

FEEDER	QUANTITY AND AWG WIRE SIZE (600V U.N.O.)	C-SIZE INCHES & QTY	NOTES
1	4-#2/0 AL, 15KV, EPR 133% INSULATION (3 PHASE WIRES, 1 NEUTRAL WIRE) WITH #2 AL GROUND CONDUCTOR	5" DUCT BANK	12470V PRIMARY, SEE SITE PLAN ESW-01 FOR CONFIGURATION AND ROUTING. DUCT BANK TO BE PVC CONCRETE ENCASED 2-WAY, 1X2 IN & OUT
2	6 (4-500Kcmil, 1#1/0G)	8-4" DUCT BANK	DUCT BANK TO BE PVC CONCRETE ENCASED 8-WAY, 2x4 WITH CENTER TOP AND BOTTOM DUCTS TO BE SPARES
3	4 (4-350Kcmil, 1#2G)	6-4" DUCT BANK	DUCT BANK TO BE PVC CONCRETE ENCASED 6-WAY, 2x3 WITH TWO BOTTOM DUCTS TO BE SPARES
4	3 (4-350Kcmil, 1#1/0G)	3-3"	
5	2 (4-500Kcmil, 1#2G)	2-3 1/2"	
6	4-500Kcmil, 1#4G	3"	
7	3-#4/0, 1#6G	2"	
8	3-#2/0, 1#6G	1 1/2"	
9	4-#1/0, 1#6G	1 1/2"	
10	3-#6, 1#10G	3/4"	
11	2-#10, 1#10G	3/4"	FIRE ALARM CIRCUIT
12	2 (3-#3/0, 1#3G)	2-2"	
13	3-#10, 1#10G	3/4"	
14	4-#4, 1#10G	1 1/2"	
15	4-#3/0, 1#6G	2"	
16	2-#12, 1#12G	2"	PVC, DIRECT BURIAL
17	2-#10,1#12G	2"	PVC, DIRECT BURIAL
18	3-#12, 1#12G	3/4"	
19	3-#2, 1#8G	1 1/2"	

NOTES:

1. TRANSFORMER ENCLOSURE SHALL BE GROUNDED.
2. PANELBOARD TO BE LABELED "SUITABLE FOR USE AS SERVICE EQUIPMENT.
3. SOLID STATE CIRCUIT BREAKER WITH LONG-TIME, SHORT-TIME & INSTANTANEOUS TRIP FUNCTION CHARACTERISTICS. CIRCUIT BREAKER TO BE 100% RATED WITHIN GROUP MOUNTED CONSTRUCTION.
4. CONNECT FIRE ALARM PANEL POWER AHEAD OF SP38 MAIN BREAKER. REFER TO FIRE ALARM RISER DIAGRAM ESL-47 FOR F.A. PANEL CONNECTIONS.
5. TRANSFORMER TO BE OIL-FILLED, THREE-PHASE, 60°C AVERAGE WINDING RISE OVER 30°C AVERAGE AMBIENT, 95KV BIL, LOOP FEED WITH TAPS, COMMERCIAL PAD MOUNT TYPE TRANSFORMER.
6. ALL BREAKERS 3 POLE UNLESS NOTED OTHERWISE.

NOT USED

8. USE 2" CONDUIT FOR UNDERGROUND SECTION OF CABLE ROUTE.

J.A. JONES MANAGEMENT SERVICES
J.A. JONES OF THE CAROLINAS
LOCKWOOD GREENE Consulting·Design·Construction

DSGN	G. WEBB	DR	R. DAVIS
SUPV	C. CARROS	CH ENGR	S. STYRON
CHK	S. STYRON	CH ENGR	S. STYRON

SUBMITTED BY (FIRM MEMBER TITLE): V.P. 03-MAY-1999 DATE
TECHNICAL BRANCH
FPE

DRAWING REVISIONS

Rev.	Description	Prep By	Date	Approvd.
0	FINAL DESIGN SUBMITTAL	BPAYNE	03MAY99	BSTYRON
1	AS NOTED	APL	15JUL99	BSTYRON
2	ISSUE FOR RECORD	BWS	01JUN01	

MCAS BEAUFORT, S.C.
BACHELOR ENLISTED QUARTERS - PHASE IV
ELECTRICAL
BEQ "B" SINGLE LINE DIAGRAM, SHEET 2 OF 4
APPROVED
DATE
ETD FOR COMMANDER, NAVFAC

Naval Facilities Engineering Command
Southern Division
Charleston, South Carolina

RECORD DRAWING DATE

CODE I.D. NO. 80091
DRAWING SIZE: D
SPEC. NO.06-98-0690
CONSTRN. CONTR. NO. N62467-98-D-0690
NAVFAC DRAWING NO. 5364485
SHEET 29 OF 44
ESL-41

$$$$ USERNAME $$$$ $$$$ DATE&TIME $$$$ $$$$ DESIGN FILE NAME $$$$

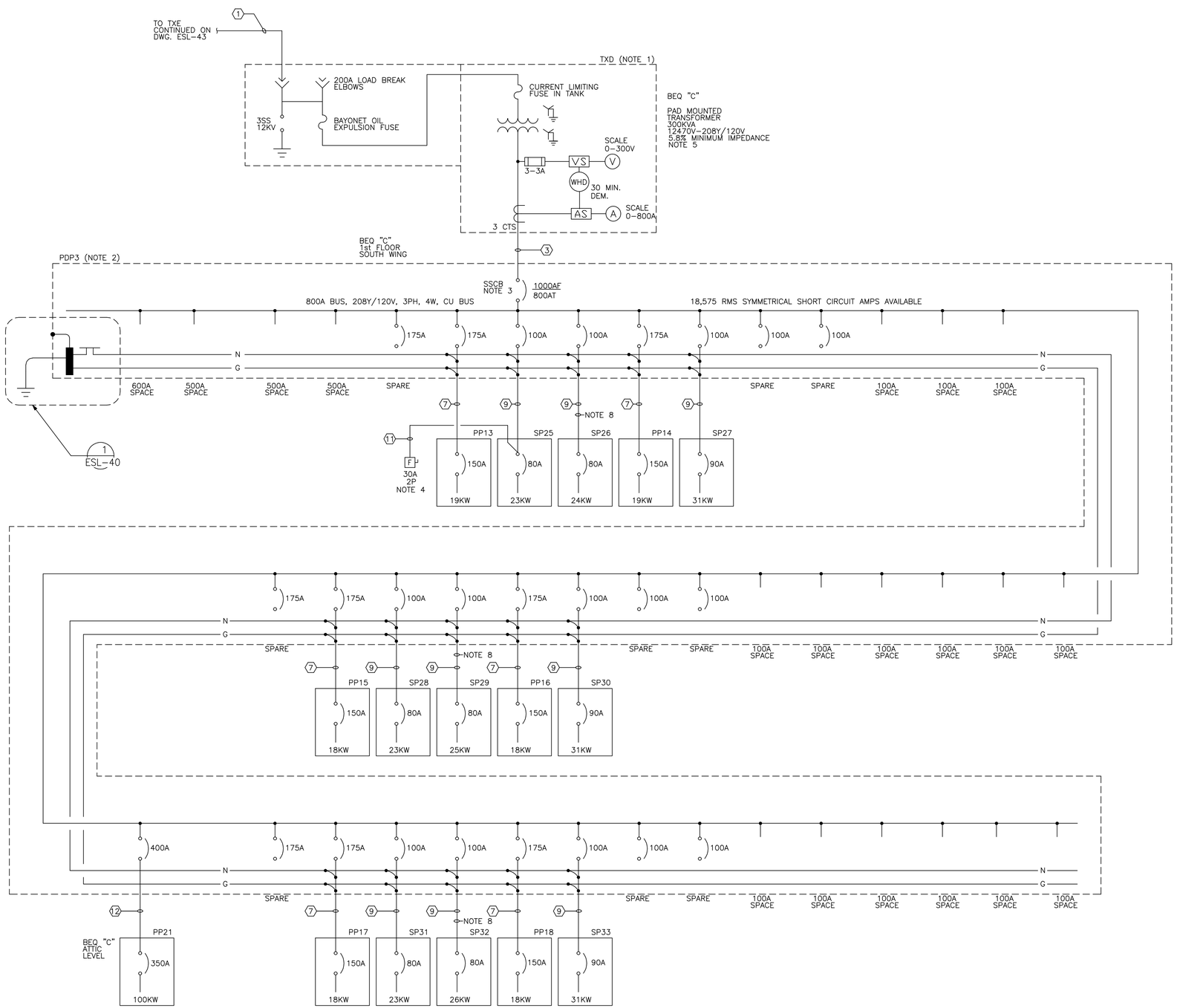

MAIN BREAKER SETTINGS

LOAD CENTER	FRAME SIZE	LONG TIME CURRENT	LONG TIME PICK-UP	LONG TIME DELAY	SHORT TIME DELAY	INSTAN-TANEOUS TRIP

CONDUIT AND CABLE SCHEDULE

FEEDER	QUANTITY AND AWG WIRE SIZE (600V U.N.O.)	C-SIZE INCHES & QTY	NOTES
1	4-#2/0 AL, 15KV, EPR 133% INSULATION (3 PHASE WIRES, 1 NEUTRAL WIRE) WITH #2 AL GROUND CONDUCTOR	5" DUCT BANK	12470V PRIMARY, SEE SITE PLAN ESW-01 FOR CONFIGURATION AND ROUTING, DUCT BANK TO BE PVC CONCRETE ENCASED 2-WAY, 1X2 IN & OUT
2	6 (4-500Kcmil)	8-4" DUCT BANK	DUCT BANK TO BE PVC CONCRETE ENCASED 8-WAY, 2x4 WITH CENTER TOP AND BOTTOM DUCTS TO BE SPARES
3	4 (4-350Kcmil, 1#2G)	6-4" DUCT BANK	DUCT BANK TO BE PVC CONCRETE ENCASED 6-WAY, 2x3 WITH TWO BOTTOM DUCTS TO BE SPARES
4	3 (4-350Kcmil, 1#1/0G)	3-3"	
5	2 (4-500Kcmil, 1#2G)	2-3 1/2"	
6	4-500Kcmil, 1#4G	3"	
7	3-#4/0, 1#6G	2"	
8	3-#2/0, 1#6G	1 1/2"	
9	4-#1/0, 1#6G	1 1/2"	
10	3-#6, 1#10G	3/4"	
11	2-#10, 1#10G	3/4"	FIRE ALARM CIRCUIT
12	2 (3-#3/0, 1#3G)	2-2"	
13	3-#10, 1#10G	3/4"	
14	4-#4, 1#10G	1 1/2"	
15	4-#3/0, 1#6G	2"	
16	2-#12, 1#12G	2"	PVC, DIRECT BURIAL
17	2-#10,1#12G	2"	PVC, DIRECT BURIAL
18	3-#12, 1#12G	3/4"	
19	3-#2, 1#8G	1 1/2"	

NOTES:

1. TRANSFORMER ENCLOSURE SHALL BE GROUNDED.
2. PANELBOARD TO BE LABELED "SUITABLE FOR USE AS SERVICE EQUIPMENT.
3. SOLID STATE CIRCUIT BREAKER WITH LONG-TIME, SHORT-TIME, INSTANTANEOUS AND GROUND (LSIG) TRIP FUNCTION CHARACTERISTICS. CIRCUIT BREAKER TO BE 100% RATED WITHIN GROUP MOUNTED CONSTRUCTION.
4. CONNECT FIRE ALARM PANEL POWER AHEAD OF SP38 MAIN BREAKER. REFER TO FIRE ALARM RISER DIAGRAM ESL-47 FOR F.A. PANEL CONNECTIONS.
5. TRANSFORMER TO BE OIL-FILLED, THREE-PHASE, 60°C AVERAGE WINDING RISE OVER 30°C AVERAGE AMBIENT, 95KV BIL, LOOP FEED WITH TAPS, COMMERCIAL PAD MOUNT TYPE TRANSFORMER.
6. NOT USED
7. ALL CONDUITS RIGID STEEL UNLESS UNLESS NOTED OTHERWISE.
8. USE 2" CONDUIT FOR UNDERGROUND SECTION OF CABLE ROUTE.

J.A. JONES ENVIRONMENTAL SERVICES
J.A. JONES OF THE CAROLINAS
LOCKWOOD GREENE
Consulting·Design·Construction

DSGN G. WEBB	DR B. PRICE	CHK B. STYRON	
SUPV C. CARROS	CH ENGR B. STYRON		
SUBMITTED BY (FIRM MEMBER TITLE)			DATE
TECHNICAL BRANCH			
FPE			

DRAWING REVISIONS

Rev.	Description	Prep By	Date	Approvd.
0	FINAL DESIGN SUBMITTAL	BPAYNE	02MAY99	BSTYRON
1	AS NOTED	APL	15JUL99	BSTYRON
2	ISSUE FOR RECORD	BWS	01JUN01	

MCAS
BEAUFORT, S.C.
BACHELOR ENLISTED QUARTERS - PHASE IV
ELECTRICAL
BEQ "C" SINGLE LINE DIAGRAM, SHEET 3 OF 4

APPROVED DATE

Naval Facilities Engineering Command
Southern Division
Charleston, South Carolina

RECORD DRAWING DATE

CODE I.D. NO. 80091
DRAWING SIZE: D
SPEC. NO.06-98-0690
CONSTRN. CONTR. NO. N62467-98-D-0690
NAVFAC DRAWING NO. 5364486
SHEET 30 OF 44

ESL-42

ED FOR COMMANDER, NAVFAC

$$$$ USERNAME $$$$ $$$$ DATE&TIME $$$$ $$$$ DESIGN FILE NAME $$$$

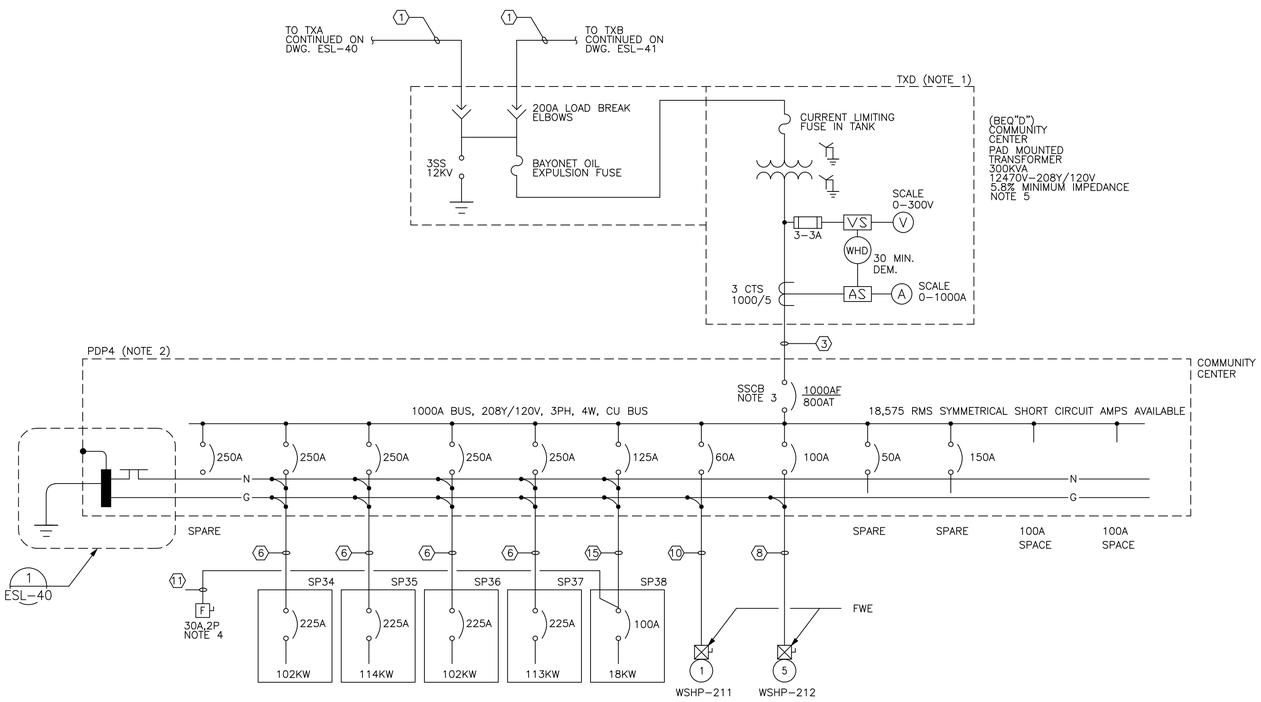

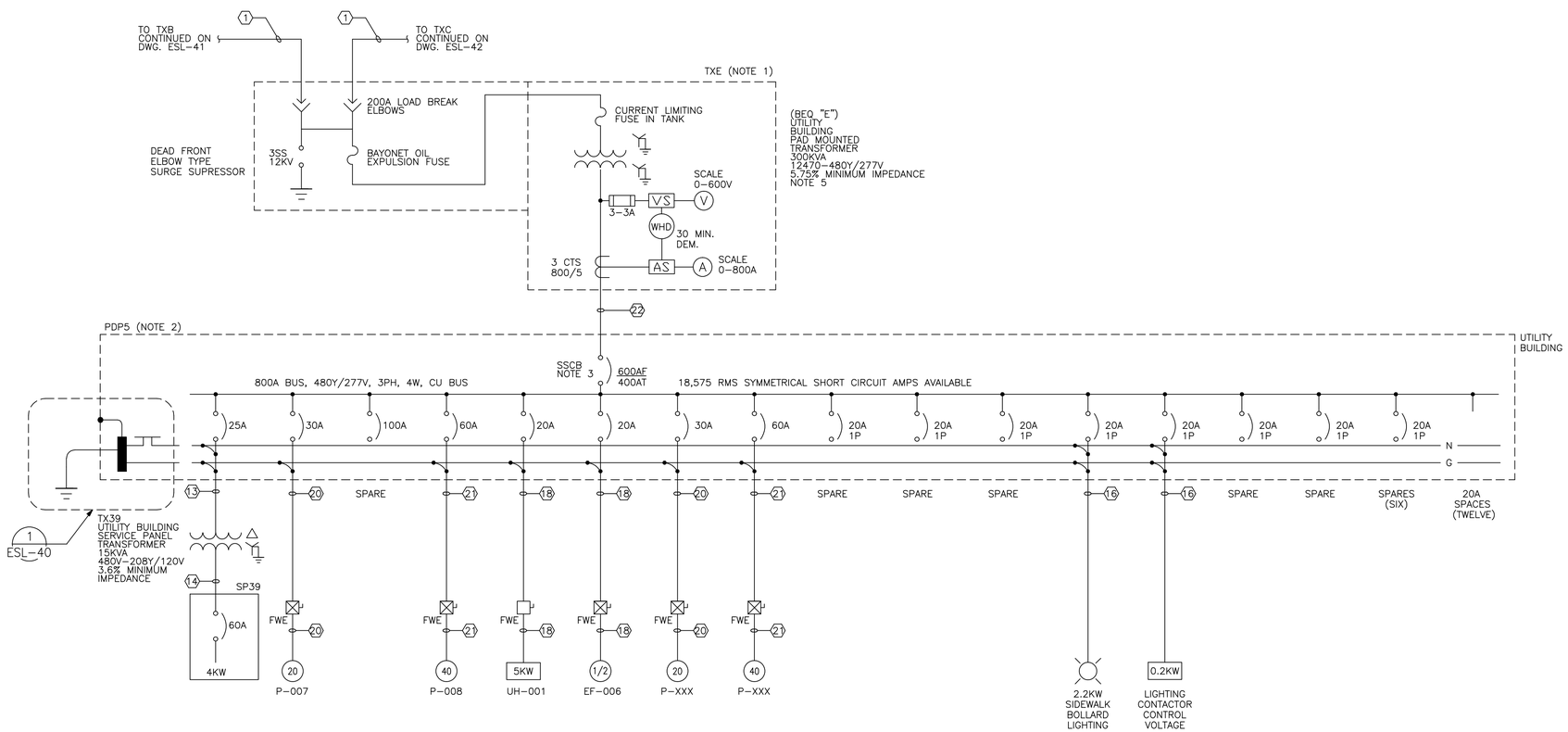

PURCHASER TO PROVIDE DESIGN ENGINEER WITH TRANSFORMER BREAKER DATA

MAIN BREAKER SETTINGS

LOAD CENTER	FRAME SIZE	LONG TIME CURRENT	LONG TIME PICK-UP	LONG TIME DELAY	SHORT TIME DELAY	INSTAN-TANEOUS TRIP
PDP-4						

CONDUIT AND CABLE SCHEDULE

FEEDER	QUANTITY AND AWG WIRE SIZE (600V U.N.O.)	C-SIZE INCHES & QTY	NOTES
1	4-#2/0 AL, 15KV, EPR 133% INSULATION (3 PHASE WIRES, 1 NEUTRAL WIRE) WITH #2 AL GROUND CONDUCTOR	5" DUCT BANK	12470V PRIMARY, SEE SITE PLAN ESW-01 FOR CONFIGURATION AND ROUTING, DUCT BANK TO BE PVC CONCRETE ENCASED 2-WAY, 1X2 PROVIDE ONE SPARE IN & ONE OUT
2	6 (4-500Kcmil)	8-4" DUCT BANK	DUCT BANK TO BE PVC CONCRETE ENCASED 8-WAY, 2x4 WITH CENTER TOP AND BOTTOM DUCTS TO BE SPARES
3	4 (4-350Kcmil, 1#2G)	6-4" DUCT BANK	DUCT BANK TO BE PVC CONCRETE ENCASED 6-WAY, 2x3 WITH TWO BOTTOM DUCTS TO BE SPARES
4	3 (4-350Kcmil, 1#1/0G)	3-3"	
5	2 (4-500Kcmil, 1#2G)	2-3 1/2"	
6	4-350Kcmil, 1#4G	3"	
7	3-#4/0, 1#6G	2"	
8	3-#2/0, 1#6G	1 1/2"	
9	4-#1/0, 1#6G	1 1/2"	
10	3-#6, 1#8G	1"	
11	2-#10, 1#10G	3/4"	FIRE ALARM CIRCUIT
12	2 (3-#3/0, 1#3G)	2-2"	
13	3-#10, 1#10G	3/4"	
14	4-#4, 1#10G	1 1/2"	
15	4-#3/0, 1#6G	2"	
16	2-#12, 1#12G	2"	PVC, DIRECT BURIAL
17	2-#10,1#12G	2"	PVC, DIRECT BURIAL
18	3-#12, 1#12G	3/4"	
19	3-#2, 1#8G	1 1/2"	
20	3-#8, 1#10G	3/4"	
21	3-#4, 1#8G	1"	
22	4 (4-#1/0,1#6G)	6-4" DUCT BANK	DUCT BANK TO BE PVC CONCRETE ENCASED 6-WAY, 2x3 WITH TWO BOTTOM DUCTS TO BE SPARES

NOTES:

1. TRANSFORMER ENCLOSURE SHALL BE GROUNDED.
2. PANELBOARD TO BE LABELED "SUITABLE FOR USE AS SERVICE EQUIPMENT.
3. SOLID STATE CIRCUIT BREAKER WITH LONG-TIME, SHORT-TIME, INSTANTANEOUS AND GROUND (LSIG) TRIP FUNCTION CHARACTERISTICS. CIRCUIT BREAKER TO BE 100% RATED WITHIN GROUP MOUNTED CONSTRUCTION.
4. CONNECT FIRE ALARM PANEL POWER AHEAD OF SP38 MAIN BREAKER. REFER TO FIRE ALARM RISER DIAGRAM ESL-47 FOR F.A. PANEL CONNECTIONS.
5. TRANSFORMER TO BE OIL-FILLED, THREE-PHASE, 60°C AVERAGE WINDING RISE OVER 30°C AVERAGE AMBIENT, 95KV BIL, LOOP FEED WITH TAPS, COMMERCIAL PAD MOUNT TYPE TRANSFORMER.
6. ALL BREAKERS 3 POLE UNLESS NOTED OTHERWISE.
7. NOT USED

J.A. JONES MANAGEMENT SERVICES, INC. — J.A. JONES OF THE CAROLINAS — LOCKWOOD GREENE Consulting Design Construction

DSGN R. VEEB | DR R. DAVIS | CHK B. STYRON
SUPV C. CARROS | CH ENGR B. STYRON
SUBMITTED BY (FIRM MANAGER, TITLE): V.P. | DATE 03-MAY-1999
TECHNICAL BRANCH | FPE

DRAWING REVISIONS

Rev.	Description	Prep By	Date	Apprvd.
0	FINAL DESIGN SUBMITTAL	BPAYNE	03MAY99	BSTYRON
1	AS NOTED	APL	15JUL99	BSTYRON
2	ISSUE FOR RECORD	BWS	01JUN01	

MCAS BEAUFORT, S.C.

BACHELOR ENLISTED QUARTERS - PHASE IV

ELECTRICAL

COMM. CENTER & UTIL. SINGLE LINE DIAGRAM, SHEET 4 OF 4

APPROVED | DATE

Naval Facilities Engineering Command
Southern Division
Charleston, South Carolina

RECORD DRAWING DATE

CODE I.D. NO. 80091
DRAWING SIZE: D
SPEC. NO.06-98-0690
CONSTRN. CONTR. NO. N62467-98-D-0690
NAVFAC DRAWING NO. 5364487
SHEET 38 OF 44

ESL-43

EFD FOR COMMANDER, NAVFAC

$$$$ USERNAME $$$$ $$$$ DATE&TIME $$$$ $$$$ DESIGN FILE NAME $$$$

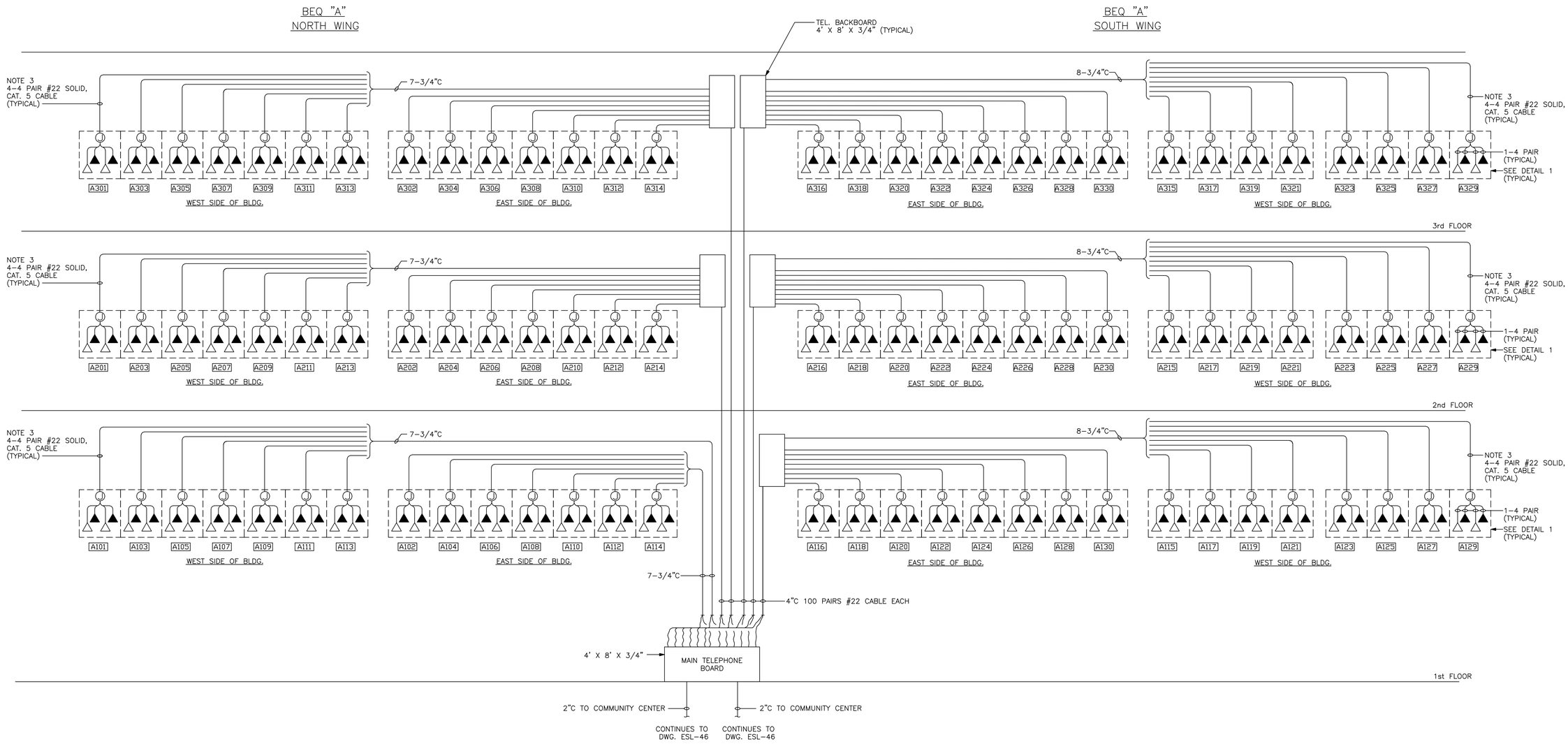

TELEPHONE/LAN RISER

SCALE: NONE

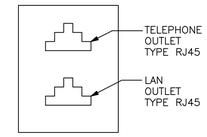

DETAIL 1
N. T. S.
SEE NOTE 1

NOTES:

1. TELEPHONES AND LAN RECEPTACLES TO BE LOCATED IN COMMON BOX. (2-PER ROOM)
2. CONTRACTOR TO FURNISH 10% SPARES.
3. USE CATAGORY 5 CABLES FOR LAN AND AND TELEPHONE WIRING.

KEY: SYMBOLS

▲ – TELEPHONE OUTLET

△ – LAN OUTLET

J.A. JONES
BATTELLE
SERVICES

J.A. JONES
OF THE CAROLINAS

LOCKWOOD GREENE
Consulting • Design • Construction

DSGN B. STYRON	DR K. PHELPS
CHK B. STYRON	SUPV C. CARROS
CH ENGR B. STYRON	SUBMITTED BY (FIRM MEMBER TITLE)
V.P. 03-MAY-1999	DATE
TECHNICAL BRANCH	
FPE	

DRAWING REVISIONS

Rev.	Description	Prep By	Date	Approvd.
0	FINAL DESIGN SUBMITTAL	G.WEBB	03MAY99	B.STYRON
1	ISSUE FOR RECORD	BWS	01JUNE01	

BEAUFORT, S.C.

BACHELOR ENLISTED QUARTERS - PHASE IV

ELECTRICAL
BEQ "A" RISERS

MCAS

APPROVED

DATE

ED FOR COMMANDER, NAVFAC

Naval Facilities Engineering Command
Southern Division
Charleston, South Carolina

RECORD DRAWING DATE

CODE I.D. NO. 80091

DRAWING SIZE: D

SPEC. NO.06-98-0690

CONSTRN. CONTR. NO.
N62467-98-D-0690

NAVFAC DRAWING NO.
5364488

SHEET 32 OF 44

ESL-44

$$$$ USERNAME $$$$ $$$$ DATE&TIME $$$$ $$$$ DESIGN FILE NAME $$$$

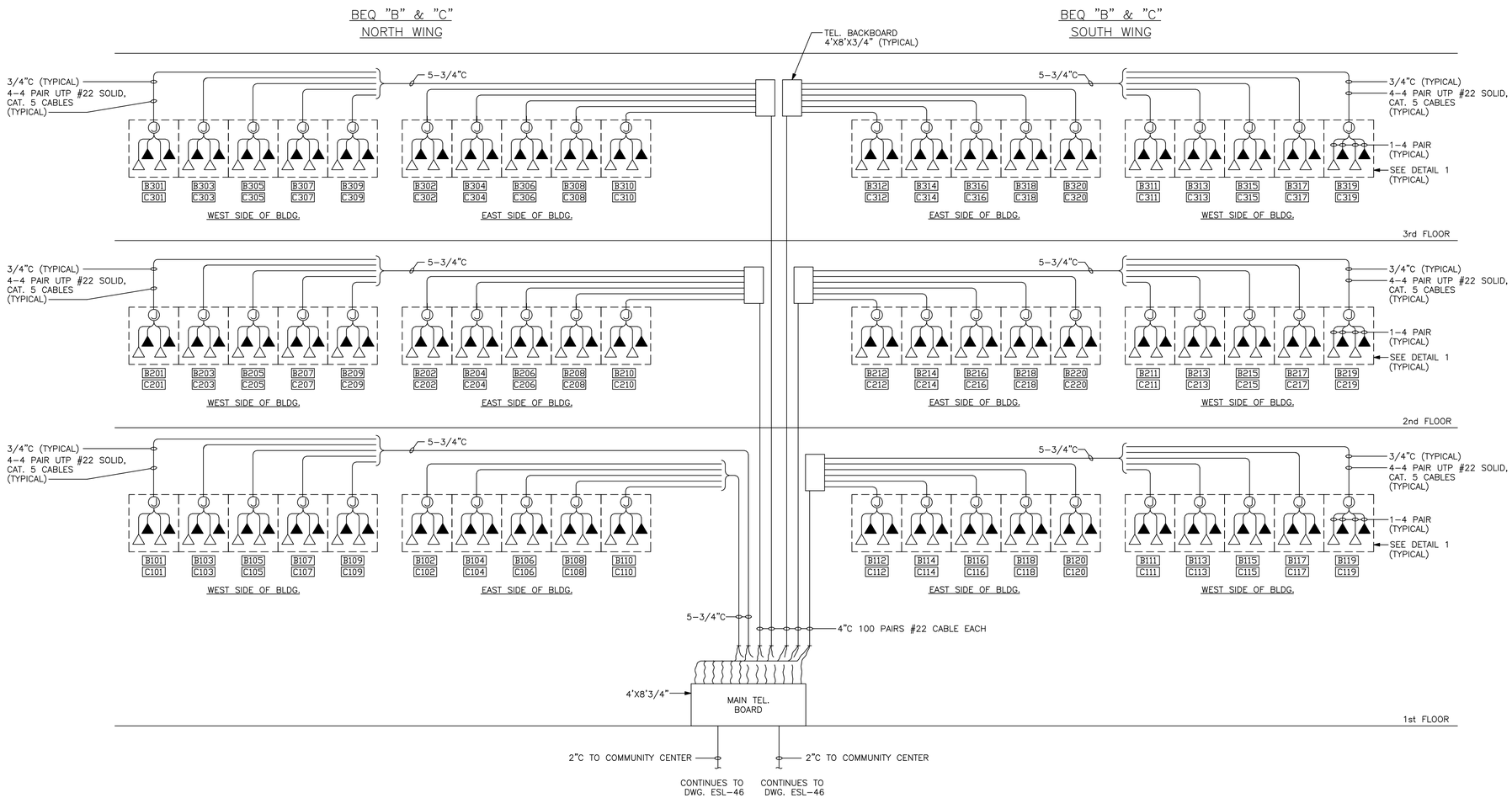

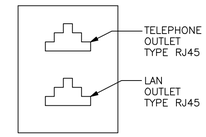

DETAIL 1
SEE NOTE 1

NOTES:

1. TELEPHONES AND LAN RECEPTACLES TO BE LOCATED IN COMMON BOX. (2-PER ROOM)
2. CONTRACTOR TO FURNISH 10% SPARES.
3. USE CATEGORY 5 CABLES FOR LAN AND TELEPHONE WIRING.

KEY: SYMBOLS

▲ – TELEPHONE OUTLET

△ – LAN OUTLET

TELEPHONE/LAN RISER-BEQ "B & C"

SCALE: NONE

J.A. JONES
MANAGEMENT SERVICES
J.A. JONES
OF THE CAROLINAS

LOCKWOOD GREENE
Consulting•Design•Construction

DSGN B. STYRON	DR K. PHELPS	CHK B. STYRON	
SUPV C. CARROS	CH ENGR B. STYRON		
SUBMITTED BY (FIRM MEMBER TITLE) V.P. 03-MAY-1999			DATE
TECHNICAL BRANCH			
FPE			

DRAWING REVISIONS

Rev.	Description	Prep By	Date	Approvd.
0	FINAL DESIGN SUBMITTAL	G.VETER	03MAY99	B.STYRON
1	ISSUE FOR RECORD	BWS	01JUN03	

BEAUFORT, S.C.

MCAS

BACHELOR ENLISTED QUARTERS - PHASE IV

ELECTRICAL

BEQ "B & C" RISERS

APPROVED

DATE

ETD FOR COMMANDER, NAVFAC

Naval Facilities Engineering Command
Southern Division
Charleston, South Carolina

RECORD DRAWING DATE

CODE I.D. NO. 80091

DRAWING SIZE: D

SPEC. NO.06-98-0690

CONSTRN. CONTR. NO. N62467-98-D-0690

NAVFAC DRAWING NO. 5364489

SHEET 33 OF 44

ESL-45

$$$$ USERNAME $$$$ $$$$ DATE&TIME $$$$ $$$$ DESIGN FILE NAME $$$$

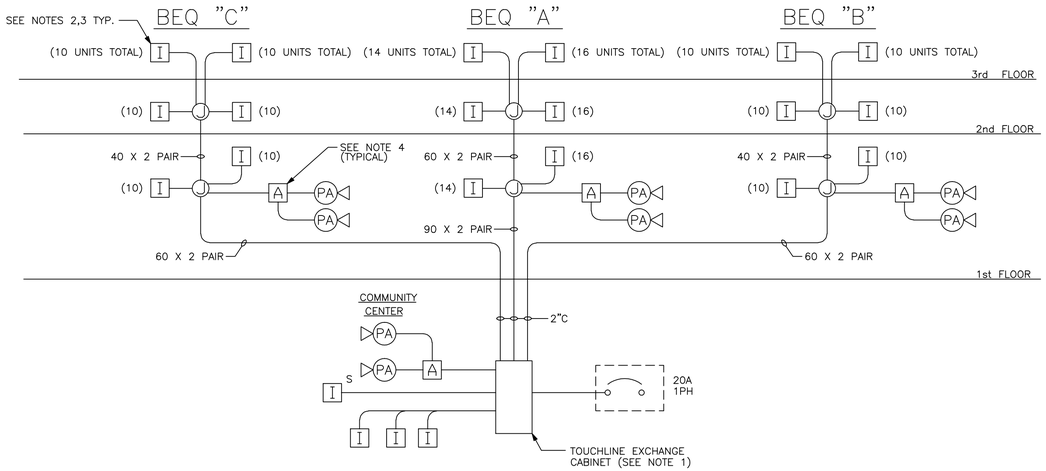

INTERCOM SYSTEM RISER DIAGRAM

SCALE: NONE

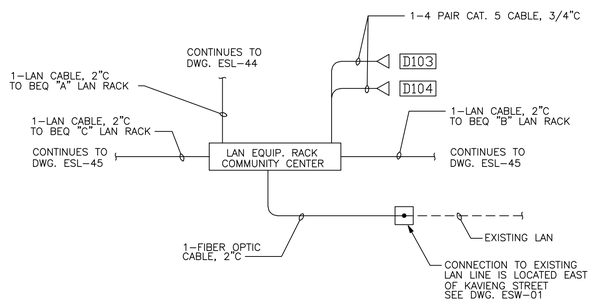

LAN SYSTEM RISER DIAGRAM

SCALE: NONE

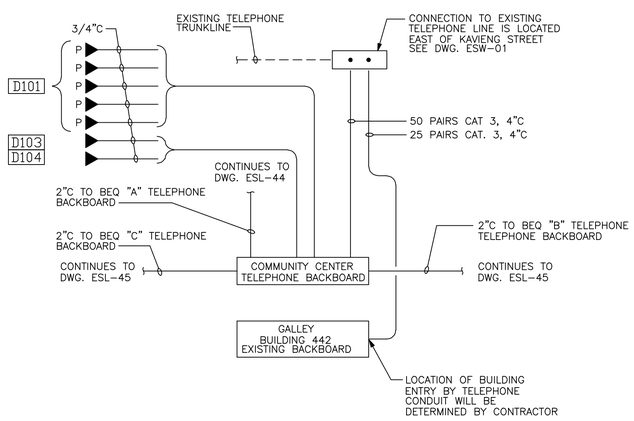

TELEPHONE SYSTEM RISER DIAGRAM

SCALE: NONE

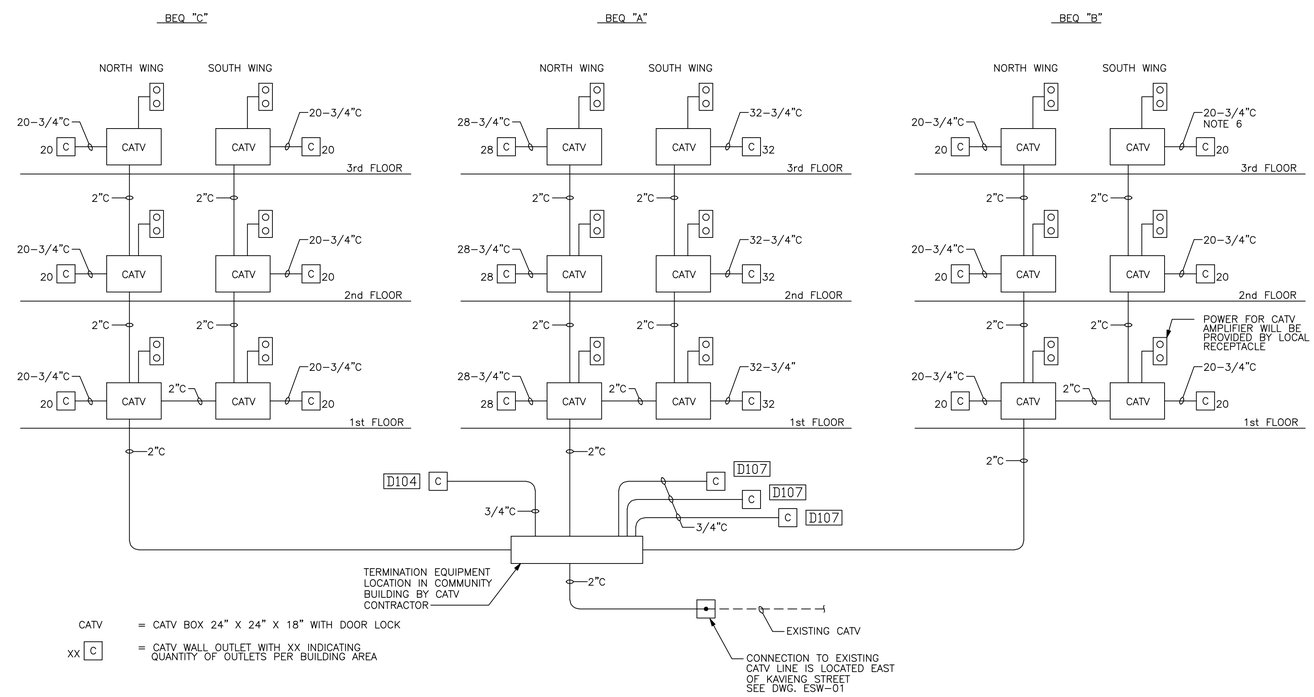

CATV = CATV BOX 24" X 24" X 18" WITH DOOR LOCK

XX C = CATV WALL OUTLET WITH XX INDICATING QUANTITY OF OUTLETS PER BUILDING AREA

CATV RISER DIAGRAM

SCALE: NONE

NOTES:

1. TOUCHLINE EXCHANGE WILL BE CONFIGURED FOR 214 EXTENSIONS, WITH A MAXIMUM TOTAL OF 240 POSSIBLE EXTENSIONS. CABINET WILL BE CENTRALLY LOCATED IN THE COMMUNITY CENTER.
2. WALL MOUNTED INTERCOM REMOTE WILL BE RECESSED WITH STAINLESS STEEL FACE PLATES AND TAMPER PROOF SCREWS. REMOTE SHALL HAVE A CALL-IN FEATURE AND PRIVACY SWITCH
3. EACH LIVING QUARTERS ROOM WILL HAVE ONE WALL MOUNTED INTERCOM UNIT AS INDICATED ON THE LARGE SCALE SYSTEMS PLAN. REFER TO DWGS. ESS-50 AND ESS-54.
4. PUBLIC ADDRESS 10 WATT AUDIO MIXER AMPLIFIER LOCATED IN ELECTRICAL EQUIPMENT ROOM.
5. MINIMUM CONDUIT SIZE SHALL BE 3/4" TYPICAL FOR ALL RISERS.
6. ALL CONDUITS SHALL BE INSTALLED WITH PULL WIRES. CATV CONTRACTOR SHALL PROVIDE COAXIAL CABLES FOR THE CATV SYSTEM.

JA. JONES ARCHITECTURE ENGINEERS OF THE CAROLINAS
LOCKWOOD GREENE Consulting·Design·Construction

DSGN G. WEBB	DR J. RIDTHEUSE	CHK S. STYRON
SUPV C. CARROS	CH ENGR B. STYRON	
SUBMITTED BY (FIRM MEMBER TITLE)		DATE
TECHNICAL BRANCH	V.P. 03-MAY-1999	
FPE		

DRAWING REVISIONS

Rev.	Description	Prep By	Date	Approvd.
0	FINAL DESIGN SUBMITTAL	G.WEBB	03MAY99	BSTYRON
1	CHANGED F.O. TO LAN CABLE	APL	15JUL99	BSTYRON
2	ISSUE FOR RECORD	BWS	01JUN01	

BEAUFORT, S.C.

BACHELOR ENLISTED QUARTERS - PHASE IV

ELECTRICAL

COMMUNITY CENTER RISERS

MCAS

DATE

APPROVED

Naval Facilities Engineering Command
Southern Division
Charleston, South Carolina

RECORD DRAWING DATE

CODE I.D. NO. 80091

DRAWING SIZE: D

SPEC. NO.06-98-0690

CONSTRN. CONTR. NO. N62467-98-D-0690

NAVFAC DRAWING NO. 5364490

SHEET 34 OF 44

ESL-46

ETD FOR COMMANDER, NAVFAC

$$$$ USERNAME $$$$ $$$$ DATE&TIME $$$$ $$$$ DESIGN FILE NAME $$$$

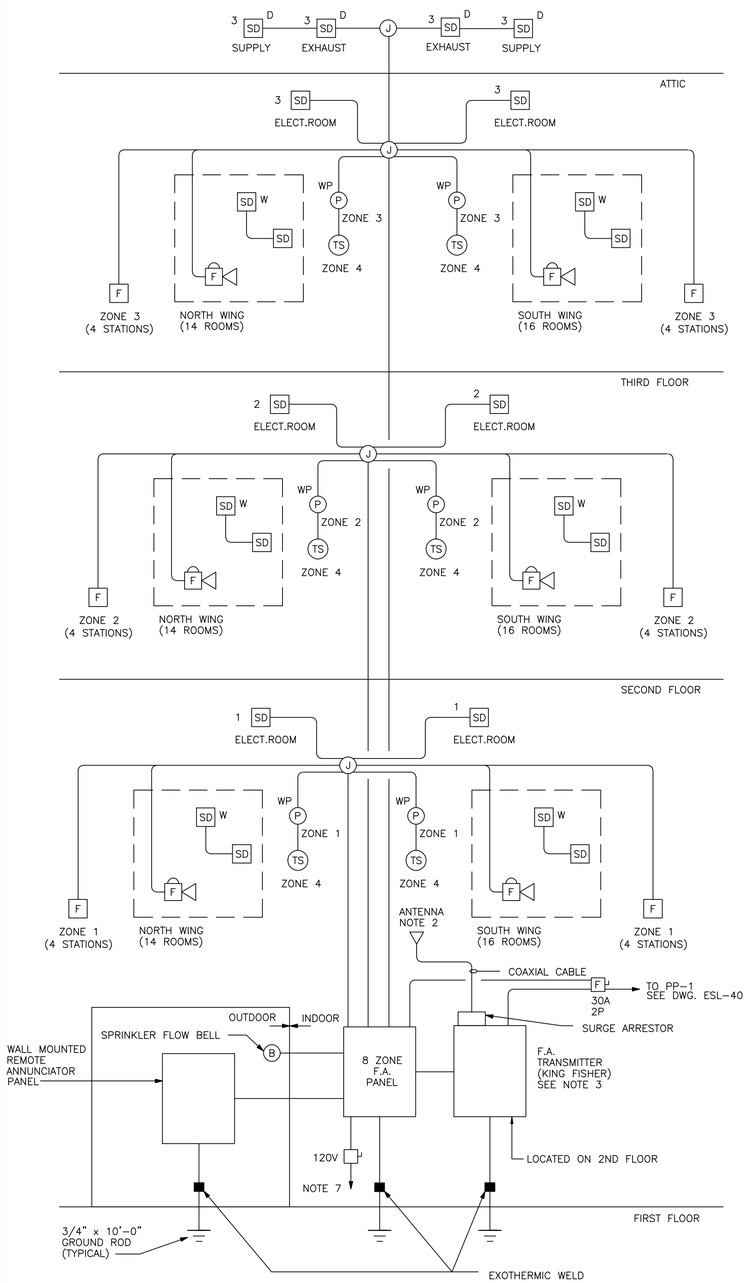

BEQ "A" FIRE ALARM RISER

SCALE: NONE

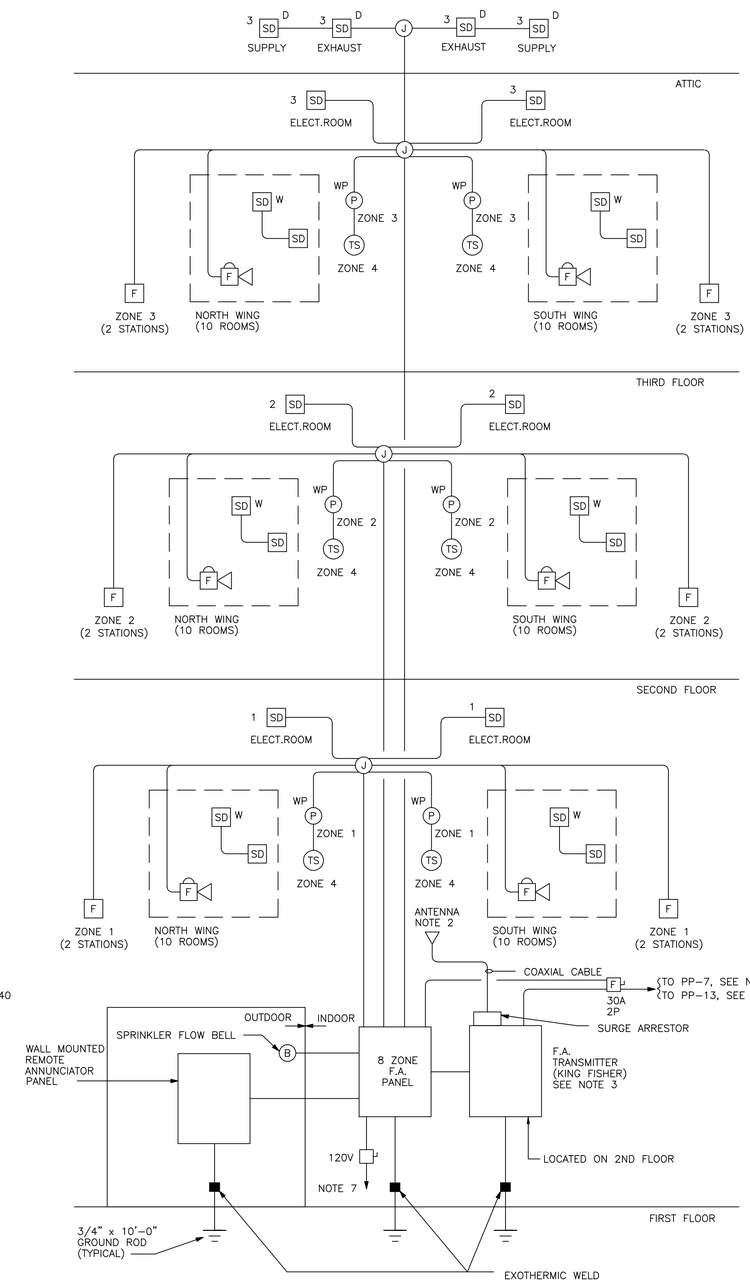

BEQ "B" & "C" FIRE ALARM RISER

SCALE: NONE

NOTES:

1. WIRE IN ACCORDANCE WITH FIRE ALARM SYSTEM MANUFACTURER'S CERTIFIED WIRING DIAGRAMS.
2. TOP OF FIRE ALARM TRANSMITTER ANTENNA SHALL BE MOUNTED 2 INCHES BELOW THE TOP OF ROOF GUTTER. PROVIDE FACTORY OR FIELD FABRICATED BRACKET BOLTED OR CLAMPED TO BUILDING.
3. TRANSMITTER WILL BE FACTORY ASSEMBLED WITH LOCKING CABINET, 60 HOUR RECHARGEABLE BATTERY SET, AUTOMATIC BATTERY CHARGER, AND ANTENNA SURGE ARRESTOR.
4. MINIMUM CONDUIT SIZE SHALL BE 3/4" TYPICAL FOR ALL RISERS.
5. FOR BEQ "B" ONLY. REFER TO DWG. ESL-41.
6. FOR BEQ "C" ONLY. REFER TO DWG. ESL-42.
7. TAKE 120V SOURCE AHEAD OF SECONDARY MAIN BREAKER. USE A 20A MOLDED CASE BREAKER AS DISCONNECT. PAINT RED THE BOX.

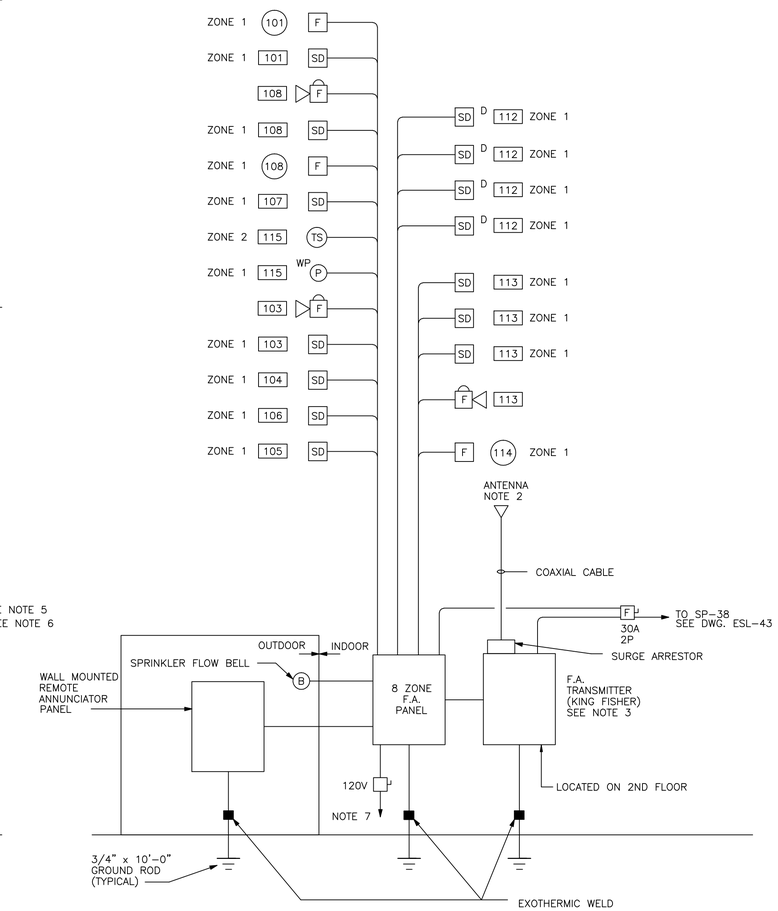

COMMUNITY CENTER FIRE ALARM RISER

SCALE: NONE

F.A. ZONE SCHEDULE FOR BEQ "A", "B" OR "C"

ZONE	AREA FUNCTION
1	BEQ FIRST FLOOR MANUAL STATION OR FLOW SWITCH
2	BEQ SECOND FLOOR MANUAL STATION OR FLOW SWITCH
3	BEQ THIRD FLOOR MANUAL STATION, FLOW SWITCH, OR ATTIC DETECTORS
4	BEQ TAMPER SWITCHES
5	BEQ F.A. PANEL TROUBLE CONDITION

F.A. ZONE SCHEDULE FOR COMMUNITY CENTER

ZONE	AREA FUNCTION
1	SMOKE DETECTORS, MANUAL STATION, OR FLOW SWITCH
2	COMMUNITY CENTER TAMPER SWITCHES
3	COMMUNITY CENTER F.A. PANEL TROUBLE CONDITION

JA. JONES ARCHITECTURE ENGINEERING OF THE CAROLINAS
LOCKWOOD GREENE Consulting·Design·Construction

DSGN G. WEBB | DR K. PHELPS | CHK S. STYRON
SUPV C. CARROS | CH ENGR S. STYRON
SUBMITTED BY (FIRM MEMBER TITLE) V.P. 03-MAY-1999 DATE
TECHNICAL BRANCH
FPE

DRAWING REVISIONS

Rev.	Description	Prep By	Date	Approvd.
0	FINAL DESIGN SUBMITTAL	G.WEBB	03MAY99	S.STYRON
1	ADDED PWR SOURCE	APL	15JUL99	S.STYRON
2	ISSUE FOR RECORD	BWS	01JUN01	

MCAS BEAUFORT, S.C.

BACHELOR ENLISTED QUARTERS - PHASE IV

ELECTRICAL

BEQ "A", "B", "C" & COMM. CENTER FIRE ALARM RISERS

APPROVED DATE

Naval Facilities Engineering Command
Southern Division
Charleston, South Carolina

RECORD DRAWING DATE

CODE I.D. NO. 80091
DRAWING SIZE: D
SPEC. NO.06-98-0690
CONSTRN. CONTR. NO. N62467-98-D-0690
NAVFAC DRAWING NO. 5364491
SHEET 25 OF 44

ESL-47

ETD FOR COMMANDER, NAVFAC

$$$$ USERNAME $$$$ $$$$ DATE&TIME $$$$ $$$$ DESIGN FILE NAME $$$$

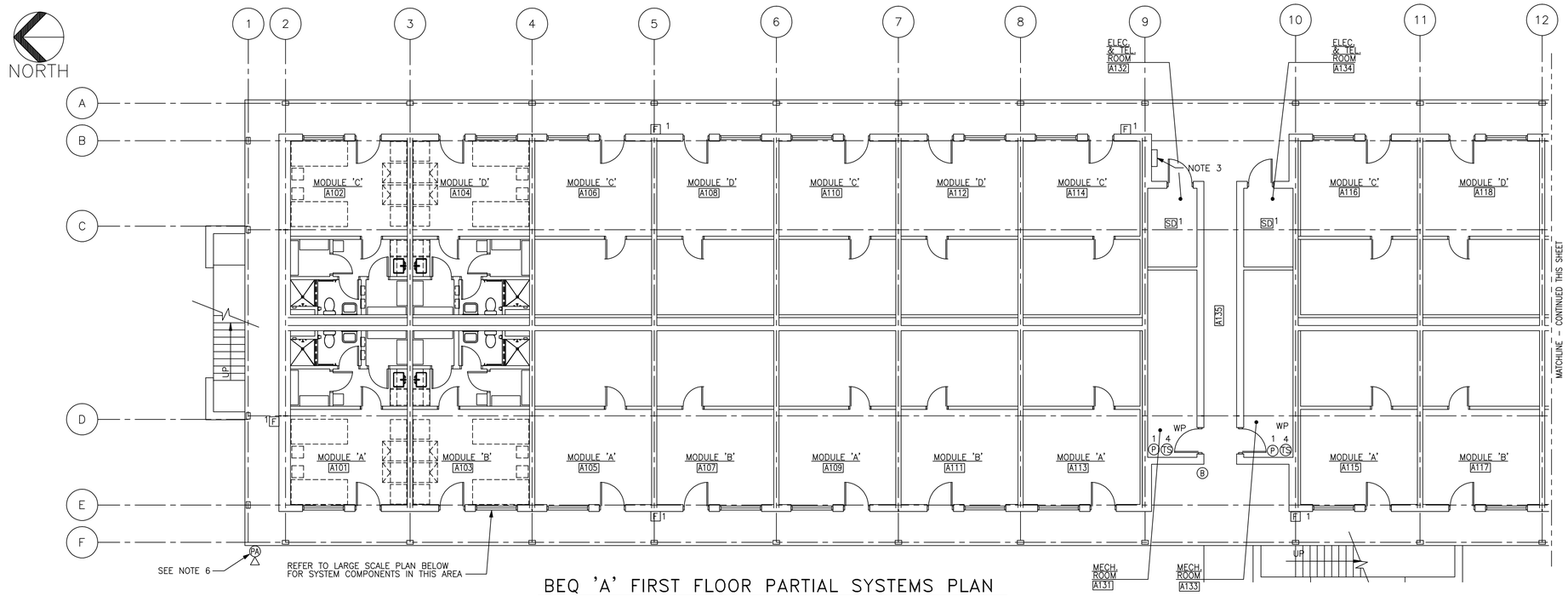

BEQ 'A' FIRST FLOOR PARTIAL SYSTEMS PLAN

1/8"=1'-0'

NOTES:

1. WIRE IN ACCORDANCE WITH MANUFACTURER'S CERTIFIED WIRING DIAGRAMS.
2. ALL SMOKE DETECTORS WILL BE A PHOTOELECTRIC TYPE WITH A TWIST LOCK BASE. DETECTORS WILL BE PROVIDED WITH A PROTECTIVE WIRE GUARD AND SECURED WITH TAMPER PROOF MECHANICAL FASTENERS.
3. LOCATION OF FLUSH MOUNTED REMOTE ANNUNCIATOR PANEL WILL BE DETERMINED BY THE BASE FIRE DEPARTMENT.
4. WALL MOUNTED SMOKE DETECTOR IN SERVICE AREA WILL BE INTERCONNECTED WITH ROOM SMOKE DETECTOR FOR SIMULTANEOUS OPERATION.
5. CENTER SMOKE DETECTOR BETWEEN BEDS.
6. MOUNT P.A. SPEAKER BRACKET ON STRUCTURAL STEEL FRAMING. MOUNT AT EL. 9'-3".

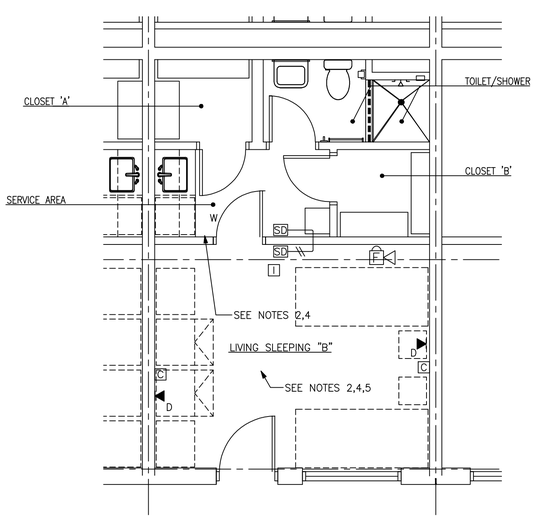

LARGE SCALE SYSTEMS PLAN-MODULE 'B'

1/4"=1'-0' NOTE: MODULES 'A', 'C' & 'D' SIMULAR TO 'B'

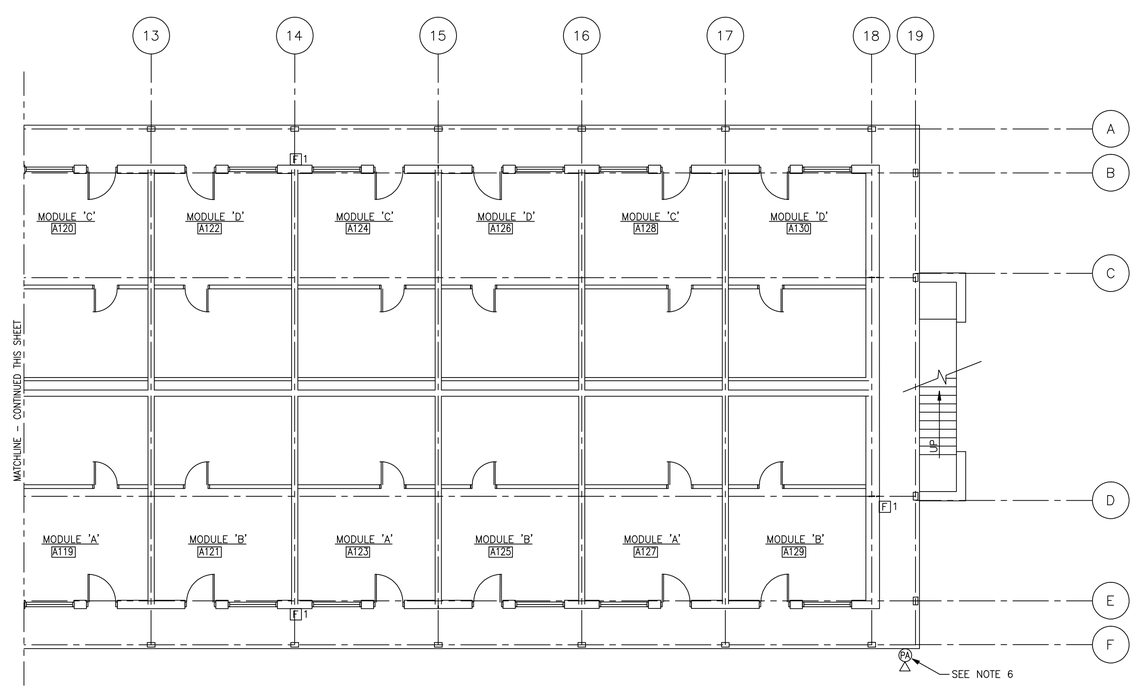

BEQ 'A' FIRST FLOOR PARTIAL SYSTEMS PLAN

1/8"=1'-0'

0 4 8 12
1/4"=1'-0"

0 4 8 16 24
1/8"=1'-0"

J.A. JONES MANAGEMENT SERVICES, INC. OF THE CAROLINAS
LOCKWOOD GREENE Consulting Design Construction

DSGN c. WEBB	DR B. PRICE	CHK B. STYRON	
SUPV c. CARROS		CH ENGR B. STYRON	
SUBMITTED BY (FIRM MANAGER TITLE): V.P.			03-MAY-1999 DATE
TECHNICAL BRANCH			
			FPE

DRAWING REVISIONS

Rev.	Description	Prep By	Date	Apprvd.
0	FINAL DESIGN SUBMITTAL	C.WEBB	03MAY99	B.STYRON
1	RELOCATED OUTLETS	APL	15JUL99	B.STYRON
2	ISSUE FOR RECORD	BWS	01JUNE01	

MCAS BEAUFORT, S.C.

BACHELOR ENLISTED QUARTERS - PHASE IV

ELECTRICAL

BEQ "A" FIRST FLOOR SYSTEMS PLAN

APPROVED DATE

EFD FOR COMMANDER, NAVFAC

Naval Facilities Engineering Command
Southern Division
Charleston, South Carolina

RECORD DRAWING DATE

CODE I.D. NO. 80091
DRAWING SIZE: D
SPEC. NO.06-98-0690
CONSTRN. CONTR. NO. N62467-98-D-0690
NAVFAC DRAWING NO. 5364492
SHEET 36 OF 44

ESS-50

$$$$ USERNAME $$$$ $$$$ DATE&TIME $$$$ $$$$ DESIGN FILE NAME $$$$

NOTES:

1. WIRE IN ACCORDANCE WITH FIRE ALARM SYSTEM MANUFACTURER'S CERTIFIED WIRING DIAGRAMS.
2. ALL SMOKE DETECTORS WILL BE A PHOTOELECTRIC TYPE WITH A TWIST LOCK BASE. DETECTORS WILL BE PROVIDED WIRE GUARD AND SECURED WITH TAMPER PROOF MECHANICAL FASTENERS.

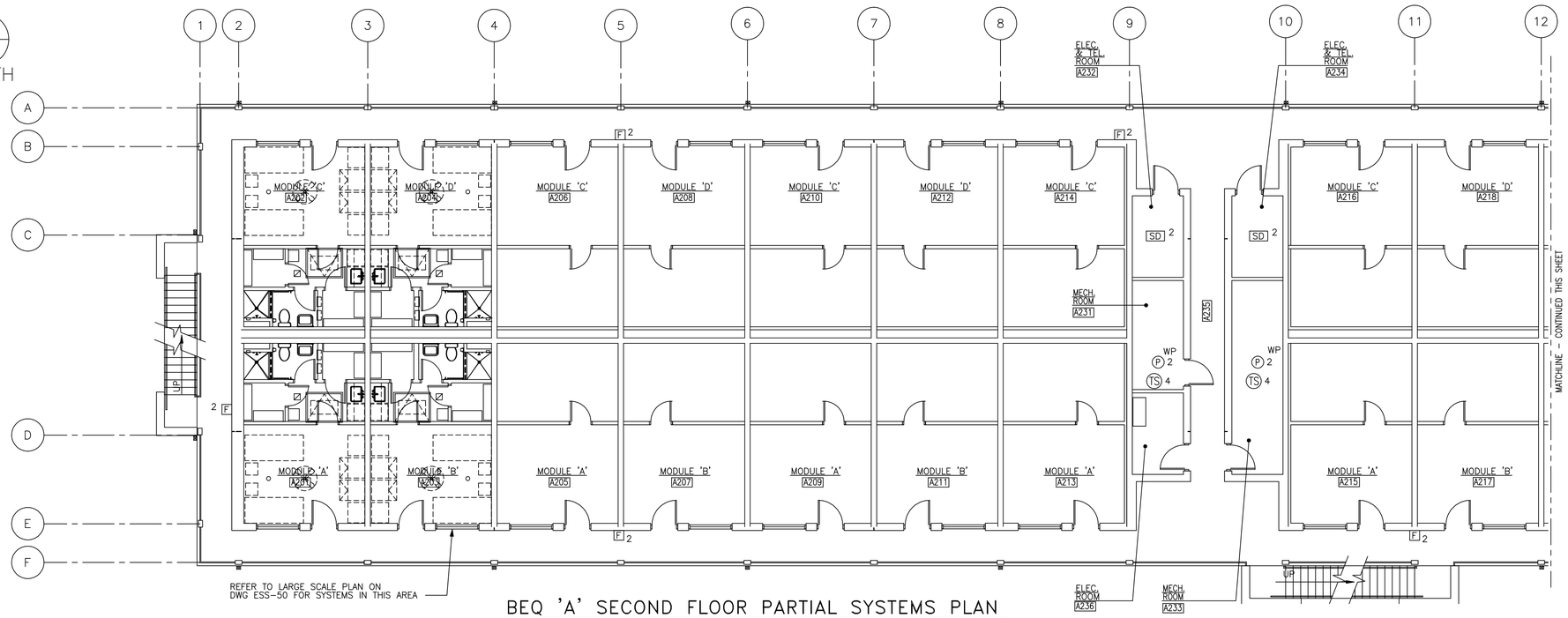

BEQ 'A' SECOND FLOOR PARTIAL SYSTEMS PLAN

1/8"=1'-0'

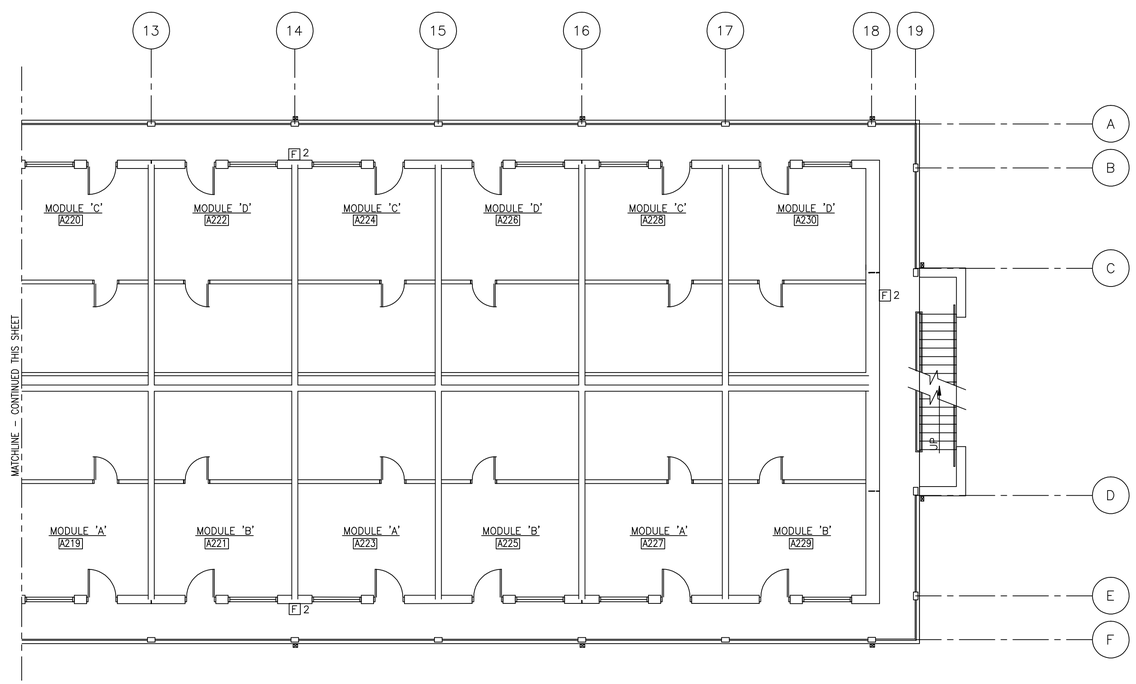

BEQ 'A' SECOND FLOOR PARTIAL SYSTEMS PLAN

1/8"=1'-0'

0 4 8 16 24

1/8"=1'-0"

JA JONES ENGINEERS OF THE CAROLINAS

LOCKWOOD GREENE Consulting Design Construction

DSGN C. WEBB DR R. DAVIS CHK B. STYRON

SUPV C. CARROS CH ENGR B. STYRON

SUBMITTED BY (FIRM MANAGER TITLE): V.P. 03-MAY-1999 DATE

TECHNICAL BRANCH

FPE

DRAWING REVISIONS

Rev.	Description	Prep By	Date	Apprvd.
0	FINAL DESIGN SUBMITTAL	C.WEBB	03MAY99	B.STYRON
1	ISSUE FOR RECORD	BWS	01JUNE01	

MCAS

BACHELOR ENLISTED QUARTERS - PHASE IV

ELECTRICAL

BEQ "A" SECOND FLOOR SYSTEMS PLAN

BEAUFORT, S.C.

APPROVED DATE

EFD FOR COMMANDER, NAVFAC

Naval Facilities Engineering Command

Southern Division

Charleston, South Carolina

RECORD DRAWING DATE

CODE I.D. NO. 80091

DRAWING SIZE: D

SPEC. NO.06-98-0690

CONSTRN. CONTR. NO. N62467-98-D-0690

NAVFAC DRAWING NO. 5364493

SHEET 37 OF 44

ESS-51

$$$$ USERNAME $$$$ $$$$ DATE&TIME $$$$ $$$$ DESIGN FILE NAME $$$$

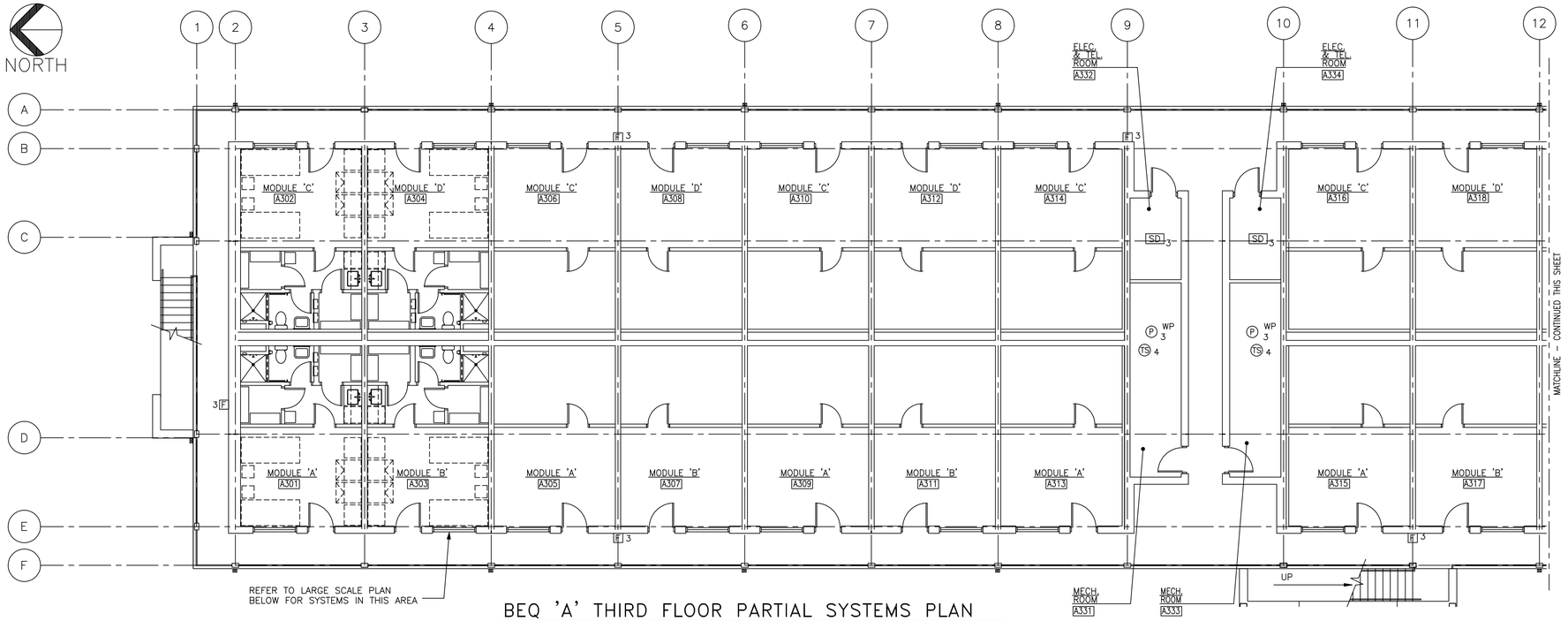

BEQ 'A' THIRD FLOOR PARTIAL SYSTEMS PLAN

1/8"=1'-0'

NOTES:

1. WIRE IN ACCORDANCE WITH FIRE ALARM SYSTEM MANUFACTURER'S CERTIFIED WIRING DIAGRAM.
2. ALL SMOKE DETECTORS WILL BE A PHOTOELECTRIC TYPE.
3. SMOKE DETECTORS IN ROOMS WILL BE PROVIDED WITH A PROTECTIVE WIRE GUARD AND SECURED WITH TAMPER PROOF MECHANICAL FASTENERS.

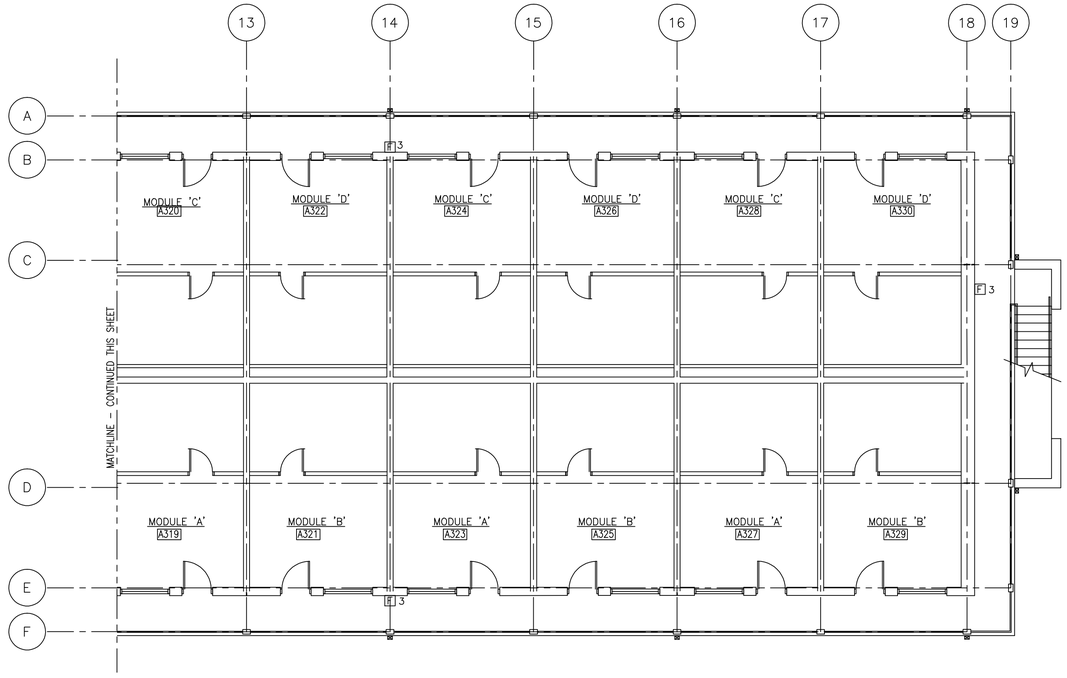

BEQ 'A' THIRD FLOOR PARTIAL SYSTEMS PLAN

1/8"=1'-0'

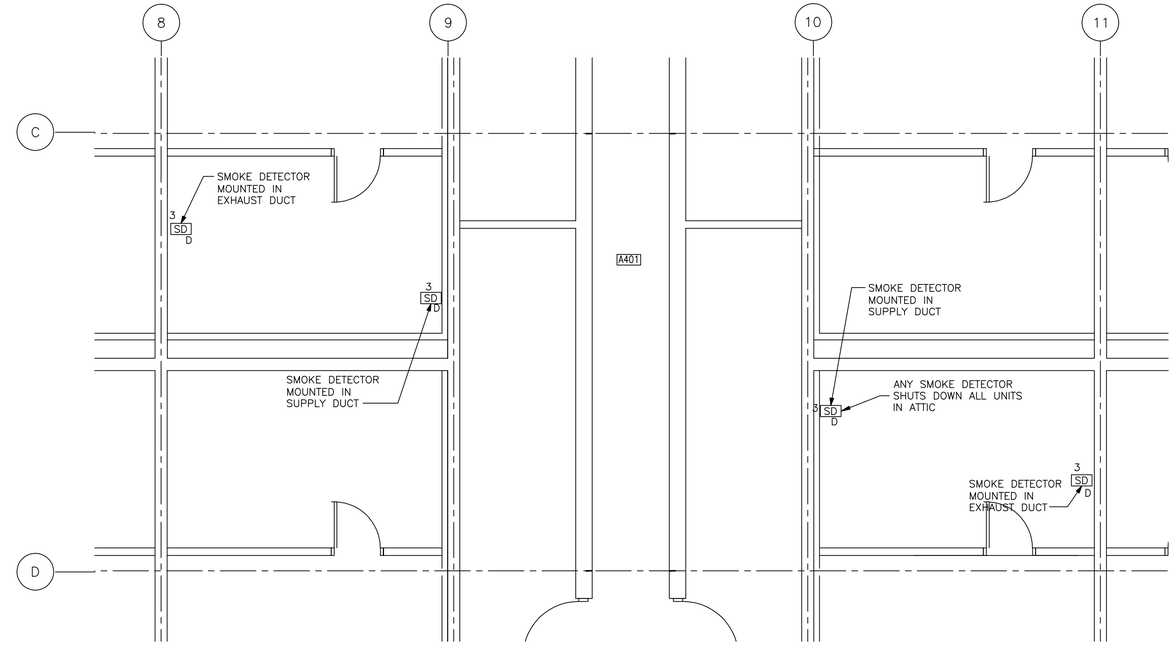

ATTIC A401 PARTIAL FLOOR SYSTEMS PLAN

1/4"=1'-0"

0 4 8 16 24
1/8"=1'-0"

0 4 8 12
1/4"=1'-0"

J.A. JONES MANAGEMENT SERVICES, INC. OF THE CAROLINAS
LOCKWOOD GREENE Consulting Design Construction

DSGN c. WEBB	DR R. DAVIS	CHK B. STYRON	
SUPV c. CARROS	CH ENGR B. STYRON		
SUBMITTED BY (FIRM NAME/ TITLE): V.P.			03-MAY-1999 DATE
TECHNICAL BRANCH			
FPE			

DRAWING REVISIONS

Rev.	Description	Prep By	Date	Apprvd.
0	FINAL DESIGN SUBMITTAL	C.WEBB	03MAY99	B.STYRON
1	ISSUE FOR RECORD	BMS	01JUNE01	

MCAS BEAUFORT, S.C.

BACHELOR ENLISTED QUARTERS - PHASE IV

ELECTRICAL

BEQ "A" THIRD FLOOR SYSTEMS PLAN

APPROVED DATE

Naval Facilities Engineering Command
Southern Division
Charleston, South Carolina

RECORD DRAWING DATE

CODE I.D. NO. 80091
DRAWING SIZE: D
SPEC. NO.06-98-0690
CONSTRN. CONTR. NO. N62467-98-D-0690
NAVFAC DRAWING NO. 5364494
SHEET 38 OF 44

ESS-52

EFD FOR COMMANDER, NAVFAC

$$$$ USERNAME $$$$ $$$$ DATE&TIME $$$$ $$$$ DESIGN FILE NAME $$$$

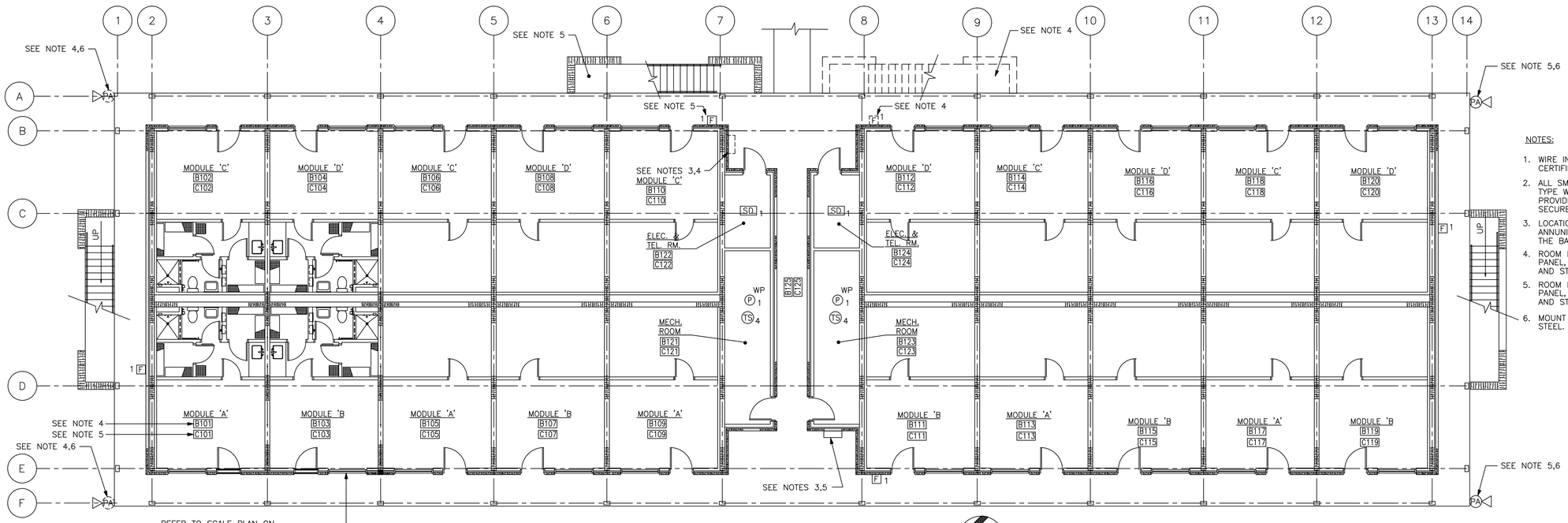

BEQ "C" FIRST FLOOR SYSTEMS PLAN

1/8"=1'-0"

NORTH

NOTES:

1. WIRE IN ACCORDANCE WITH MANUFACTURER'S CERTIFIED WIRING DDIAGRAMS.
2. ALL SMOKE DETECTORS WILL BE A PHOTOELECTRIC TYPE WITH A TWIST LOCK BASE. DETECTORS WILL BE PROVIDED WITH A PROTECTIVE WIRE GUARD AND SECURED WITH TAMPER PROOF MECHANICAL FASTENERS.
3. LOCATION OF FLUSH MOUNTED REMOTE ANNUNICATOR PANEL WILL BE DETERMINED BY THE BASE FIRE DEPARTMENT.
4. ROOM NUMBERS, FIRE ALARM REMOTE ANNUNCIATOR PANEL, MANUAL F.A. PULL STATION, P.A. SPEAKER AND STAIRWELL LOCATION FOR BEQ "B" ONLY.
5. ROOM NUMBERS, FIRE ALARM REMOTE ANNUNCIATOR PANEL, MANUAL F.A. PULL STATION, P.A. SPEAKER AND STAIRWELL LOCATION FOR BEQ "C" ONLY.
6. MOUNT P.A. SPEAKER WITH BRACKET ON STRUCTURAL STEEL. MOUNT AT EL. 9'-3".

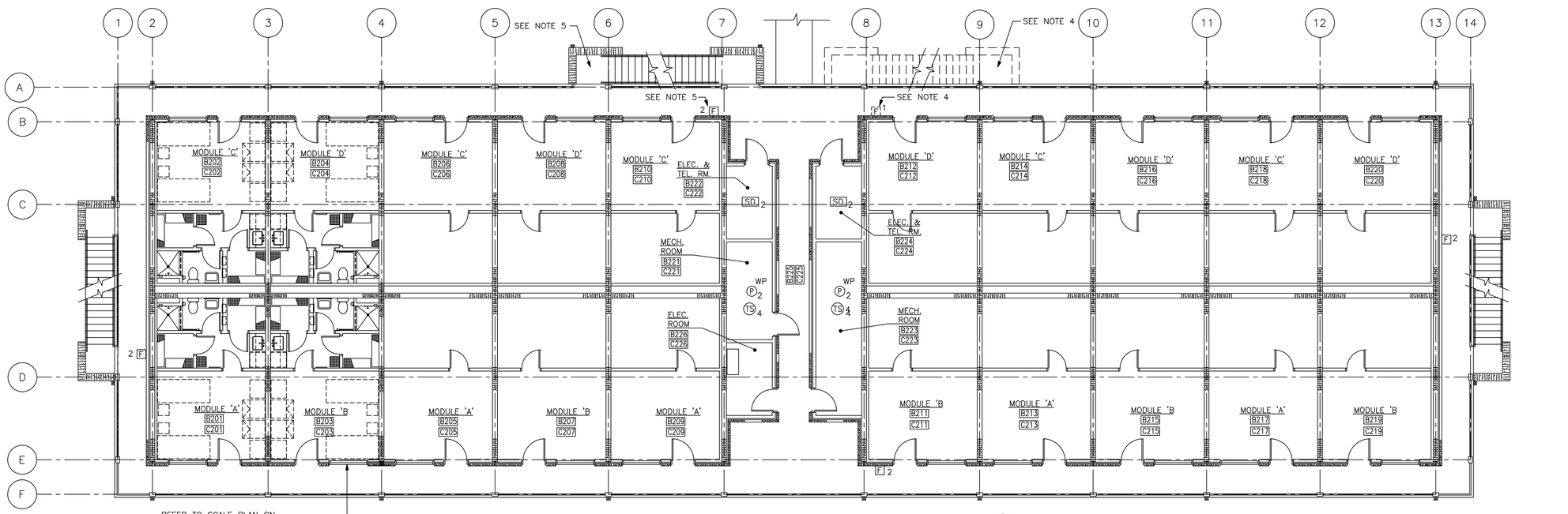

BEQ "C" SECOND FLOOR SYSTEMS PLAN

1/8"=1'-0"

NORTH

0 4 8 16 24

1/8"=1'-0"

J.A. JONES MANAGEMENT SERVICES, INC. OF THE CAROLINAS

LOCKWOOD GREENE Consulting Design Construction

DSGN C. WEBB | DR R. DAVIS | CHK B. STYRON

SUPV C. CARROS | CH ENGR B. STYRON

SUBMITTED BY (FIRM MANAGER TITLE): V.P. | DATE 03-MAY-1999

TECHNICAL BRANCH | FPE

DRAWING REVISIONS

Rev.	Description	Prep By	Date	Apprvd.
0	FINAL DESIGN SUBMITTAL	C.WEBB	02MAY99	B.STYRON
1	ISSUE FOR RECORD	BWS	01JUN00	

MCAS BEAUFORT, S.C.

BACHELOR ENLISTED QUARTERS - PHASE IV

ELECTRICAL

BEQ "B & C" 1st & 2nd FLOOR SYSTEMS PLANS

APPROVED | DATE

Naval Facilities Engineering Command

Southern Division

Charleston, South Carolina

RECORD DRAWING DATE

CODE I.D. NO. 80091

DRAWING SIZE: D

SPEC. NO.06-98-0690

CONSTRN. CONTR. NO. N62467-98-D-0690

NAVFAC DRAWING NO. 5364495

SHEET 39 OF 44

ESS-53

EFD FOR COMMANDER, NAVFAC

$$$$ USERNAME $$$$ $$$$ DATE&TIME $$$$ $$$$ DESIGN FILE NAME $$$$

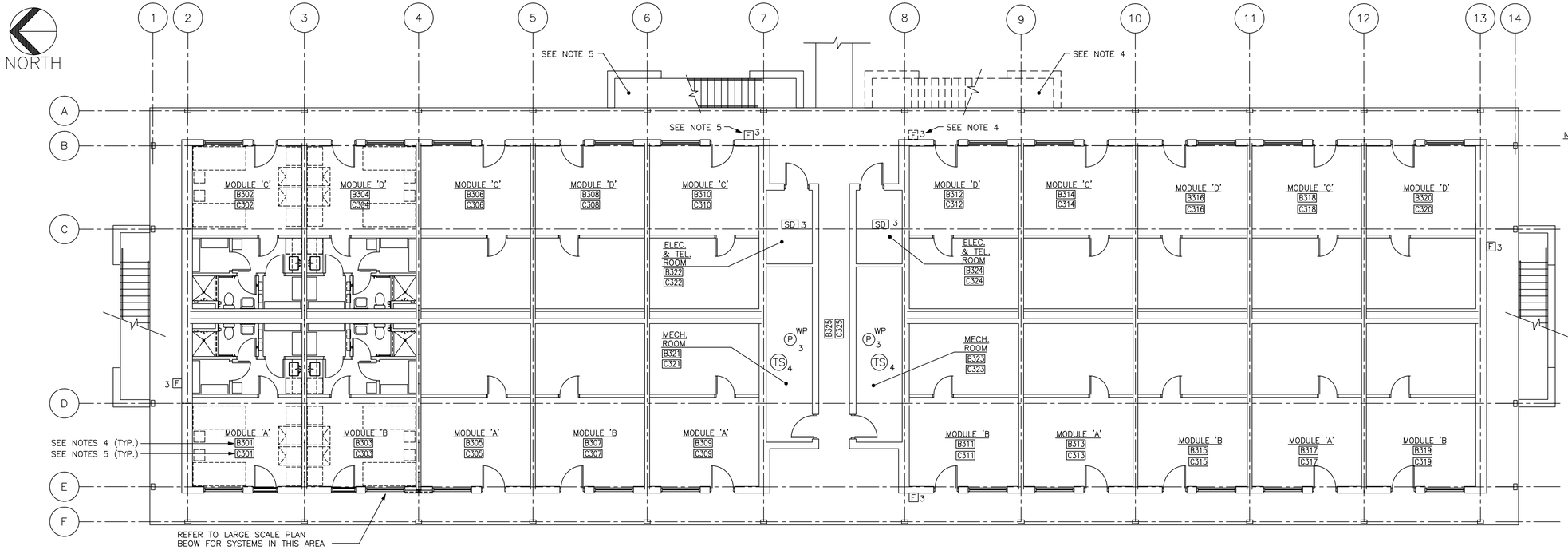

BEQ 'C' THIRD FLOOR SYSTEMS PLAN

1/8"=1'-0"

NOTE: BEQ 'B' SIM. W/PLAN DIFFERENCE IN THE LOCATION OF THE STAIR ADJACENT TO THE THE BREEZEWAY.

NOTES:

1. WIRE IN ACCORDANCE WITH MAUNFACTURER'S CERTIFIED WIRING DIAGRAMS.
2. ALL SMOKE DETECTORS WILL BE PHOTOELECTRIC TYPE.
3. SMOKE DETECTORS IN ROOMS WILL BE PROVIDED WITH A PROTECTIVE WIRE GUARD AND SECURED WITH TAMPER PROOF MECHANICAL FASTENERS.
4. ROOM NUMBERS, FIRE ALARM MANUAL PULLSTATION, AND STAIRWELL LOCATION FOR BEQ "B" ONLY.
5. ROOM NUMBERS, FIRE ALARM MANUAL PULLSTATION, AND STAIRWELL LOCATION FOR BEQ "C" ONLY.
6. CENTER SMOKE DETECTOR BETWEEN BEDS.
7. WALL MOUNTED SMOKE DETECTOR IN SERVICE AREA WILL BE INTERCONNECTED WITH ROOM SMOKE DETECTOR FOR SIMULTANEOUS OPERATION.

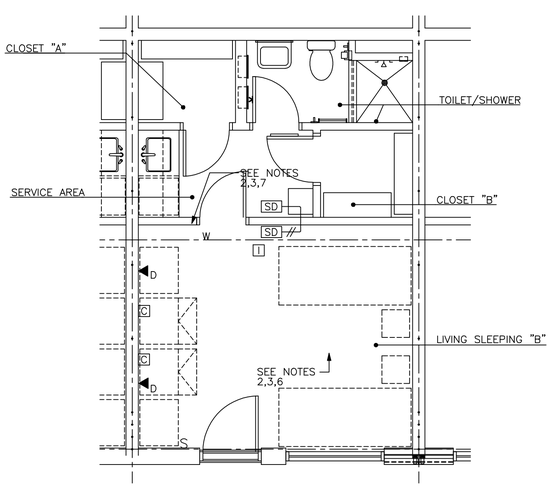

LARGE SCALE SYSTEMS PLAN – MODULE 'B'

1/4"=1'-0"

NOTE: MODULES 'A', 'C' & 'D' SIMULAR TO 'B'

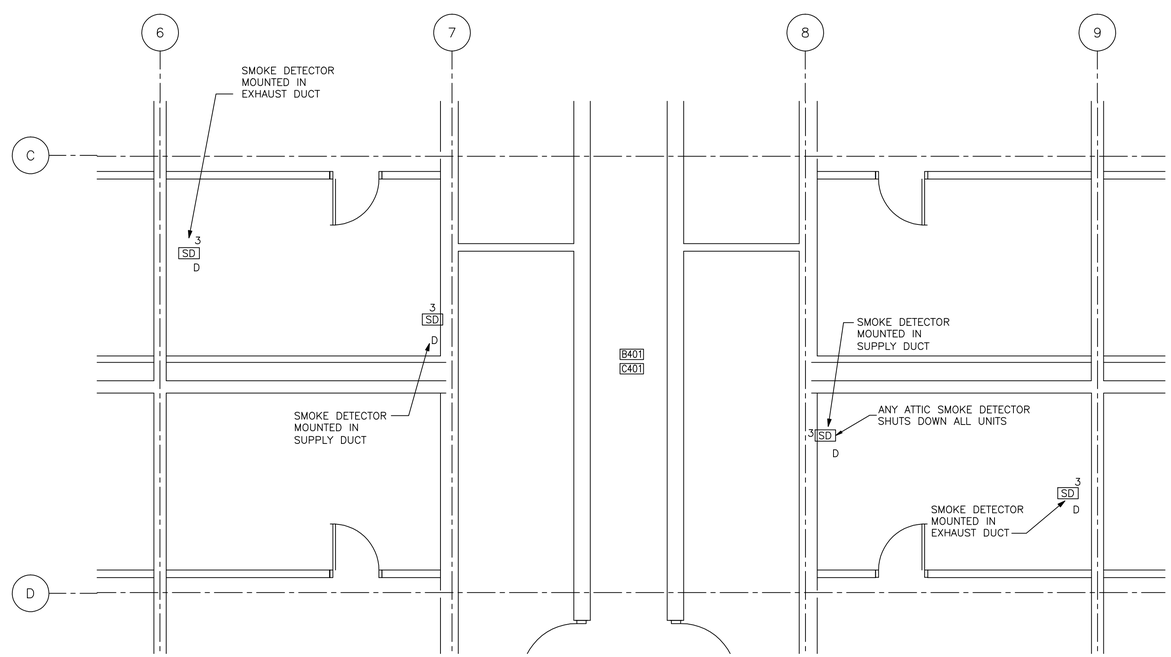

ATTIC B401/C401 PARTIAL FLOOR SYSTEMS PLAN

1/4"=1'-0"

0 4 8 12
1/4"=1'-0"

0 4 8 16 24
1/8"=1'-0"

J.A. JONES MANAGEMENT SERVICES / J.A. JONES OF THE CAROLINAS / LOCKWOOD GREENE Consulting·Design·Construction

DSGN. G. WEBB	DR. R. DAVIS	CHK B. STYRON	
SUPV G. CARROS		CH ENGR B. STYRON	
SUBMITTED BY (FIRM MGR/SP-TITLE):			
TECHNICAL BRANCH			
FPE			

DRAWING REVISIONS

Rev.	Description	Prep By	Date	Apprvd.
0	FINAL DESIGN SUBMITTAL	G.WEBB	03MAY99	B.STYRON
1	ISSUE FOR RECORD	BWS	01JUN01	

MCAS BEAUFORT, S.C.

BACHELOR ENLISTED QUARTERS – PHASE IV

ELECTRICAL

BEQ 'B' & 'C' THIRD FLOOR SYSTEMS PLAN

APPROVED DATE EFD FOR COMMANDER, NAVFAC

Naval Facilities Engineering Command
Southern Division
Charleston, South Carolina

RECORD DRAWING DATE

CODE I.D. NO. 80091

DRAWING SIZE: D

SPEC. NO.06-98-0690

CONSTRN. CONTR. NO. N62467-98-D-0690

NAVFAC DRAWING NO. 5364496

SHEET 40 OF 44

ESS-54

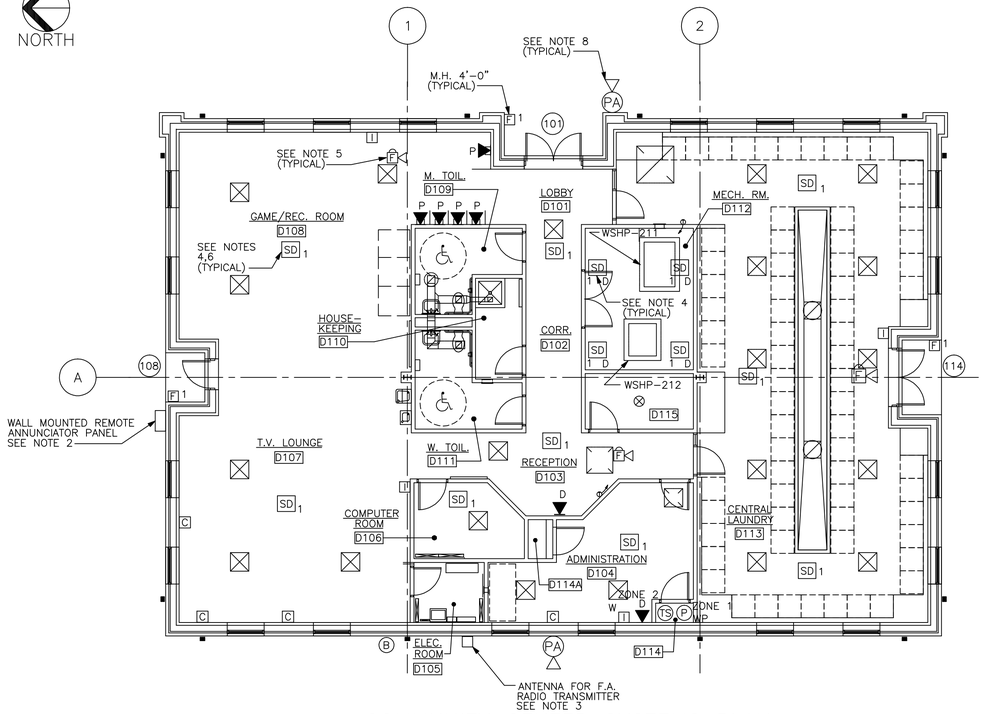

COMMUNITY CENTER SYSTEMS PLAN

1/8"=1'-0'

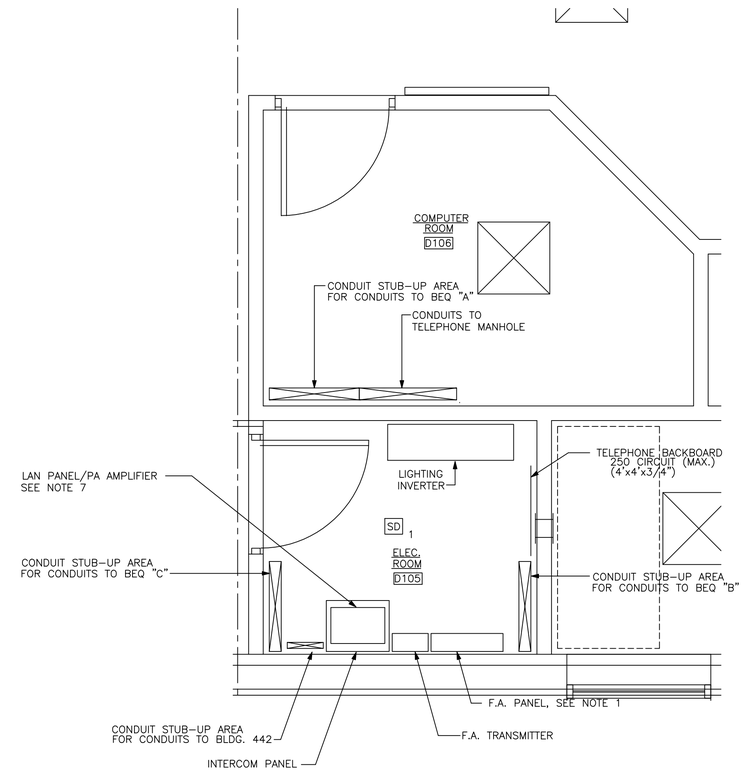

ELECTRIC ROOM D105 AND COMPUTER ROOM D106

LARGE SCALE SYSTEMS PLAN

1/2"=1'-0'

NOTES:

1. WIRE IN ACCORDANCE WITH FIRE ALARM SYSTEMS MANUFACTURERS CERTIFIED WIRING DIAGRAMS.
2. LOCATION OF REMOTE ANNUNCIATOR WILL BE DETERMINED BY THE BASE FIRE DEPARTMENT.
3. TOP OF FIRE ALARM TRANSMITTER ANTENNA SHALL BE MOUNTED 2 INCHES BELOW THE TOP OF ROOF GUTTER. PROVIDE FACTORY OR FIELD FABRICATED BRACKET BOLTED TO BUILDING.
4. ALL SMOKE DETECTORS WILL BE A PHOTOELECTRIC TYPE.
5. FIRE ALARM HORNS SHALL BE MOUNTED FROM THE CEILING.
6. SMOKE DETECTORS IN ROOMS WILL BE PROVIDED WITH A PROTECTIVE WIRE GUARD AND SECURED WITH TAMPER PROOF MECHANICAL FASTENERS.
7. INSTALL SHELF OR OTHER STACKING SYSTEM TO LOCATE PA AMPLIFIER ABOVE OR BELOW LAN PANEL.
8. MOUNT P. A. SPEAKER WITH BRACKET ON STRUCTURAL STEEL AT ELEVATION 12'-3".

0 2 4 6
1/2"=1'-0"

0 4 8 16 24
1/8"=1'-0"

J.A. JONES MANAGEMENT SERVICES, INC. OF THE CAROLINAS
LOCKWOOD GREENE Consulting Design Construction

DSGN c. WEBB	DR B. PRICE	CHK B. STYRON	
SUPV c. CARROS		CH ENGR B. STYRON	
SUBMITTED BY (FIRM MANAGER TITLE): V.P.			03-MAY-1999 DATE
TECHNICAL BRANCH			
FPE			

DRAWING REVISIONS

Rev.	Description	Prep By	Date	Apprvd.
0	FINAL DESIGN SUBMITTAL	C.WEBBB	03MAY99	B.STYRON
1	ISSUE FOR RECORD	BMS	01JUNE01	

MCAS
BACHELOR ENLISTED QUARTERS - PHASE IV
ELECTRICAL
COMMUNITY CENTER SYSTEMS PLAN
BEAUFORT, S.C.
APPROVED
DATE
EFD FOR COMMANDER, NAVFAC

Naval Facilities Engineering Command
Southern Division
Charleston, South Carolina

RECORD DRAWING DATE
CODE I.D. NO. 80091
DRAWING SIZE: D
SPEC. NO.06-98-0690
CONSTRN. CONTR. NO. N62467-98-D-0690
NAVFAC DRAWING NO. 5364497
SHEET 41 OF 44
ESS-55

$$$$ USERNAME $$$$ $$$$ DATE&TIME $$$$ $$$$ DESIGN FILE NAME $$$$

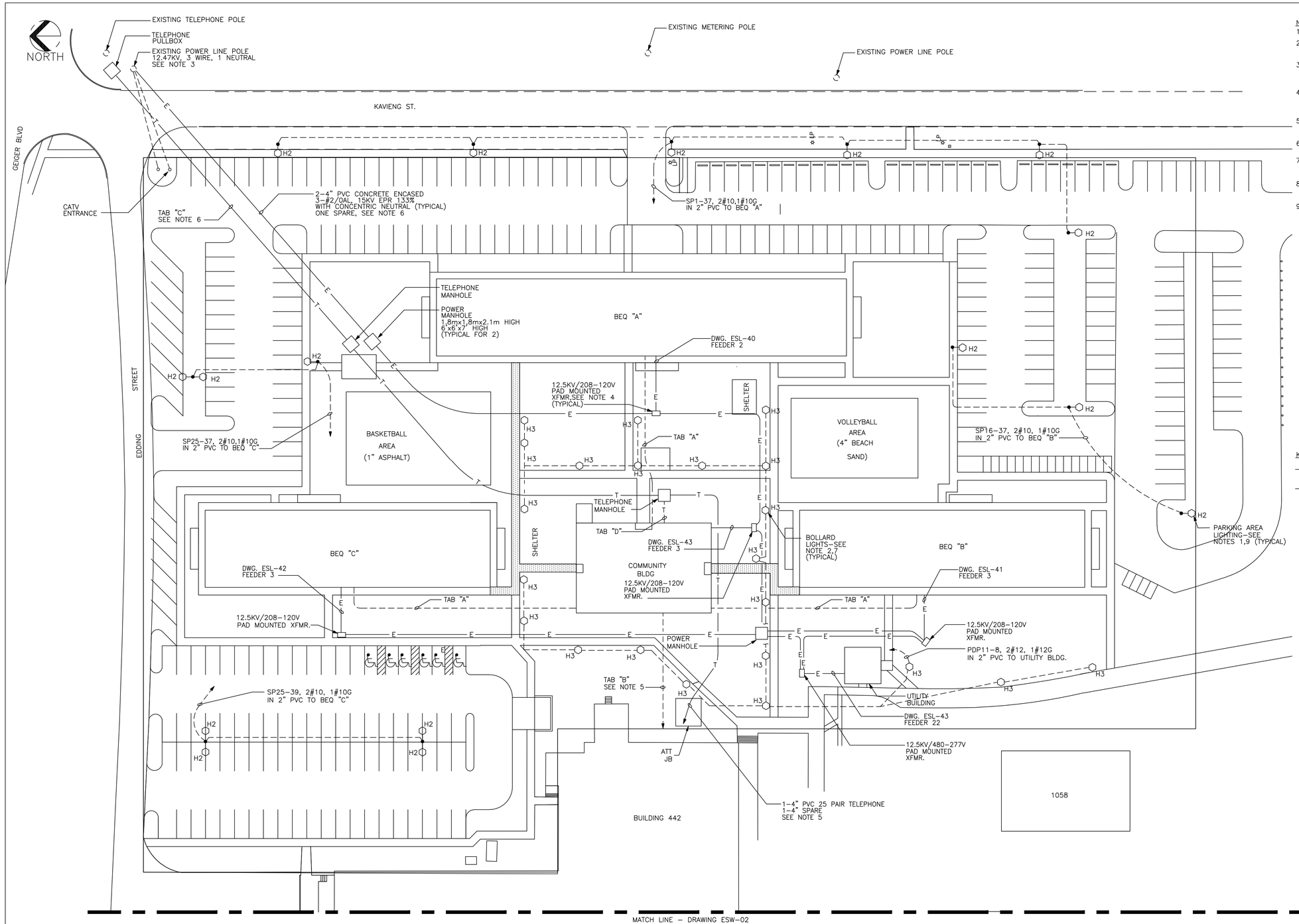

NOTES:

1. 250 WATT HPS ON 40' POLE
2. BOLLARDS LAMPS ARE 70 WATT HPS. BOLLARDS WILL BE MOUNTED 1'-0" FROM THE SIDEWALKS.
3. MAIN ELECTRICAL SERVICE FOR BEQ, COMMUNITY, AND UTILITY BUILDINGS WILL BE PROVIDED FROM THE EXISTING SERVICE LINE.
4. PAD MOUNTED OIL FILLED TRANSFORMERS WILL BE MOUNTED A MINIMUM OF 25'-0" FROM BUILDING. TRANSFORMER TO INCOMING LINE CONNECTIONS WILL BE WYE-WYE.
5. VERIFY AND DETERMINE EXACT LOCATION OF TERMINATION POINT OF CONDUIT AND CABLES IN BUILDING 442.
6. DO NOT EXCEED CABLE BENDING RADIUS OR CABLE TENSION DURING INSTALLATION.
7. BOLLARD LIGHTING SHALL BE FED FROM PANEL PDP11 IN UTILITY BLDG. SEE SEE DWG. EEL-05 FOR CONTROLS.
8. COORDINATE LOCATION OF DUCT BANK AND MANHOLES WITH LOCATION OF UNDERGROUND UTILITIES.
9. PARKING LOT LIGHTNG SHALL BE FED FROM A SP PANEL IN THE BEQ ELEC. & TEL. ROOM. SEE EEL-05 FOR CONTROLS.

TAB"A"
BEQ TO COMMUNITY CENTER BUILDING

2-4" PVC SPARE W/PULLCORD
1-2" PVC CATV
1-2" PVC LAN
1-2" PVC INTERCOM
2-2" PVC SPARE W/PULLCORD
2-2" PVC TELEPHONE

TAB"B"
COMMUNITY CENTER BUILDING TO BUILDING 442

1-2" PVC LAN (FUTURE) W/PULLCORD
1-100 PR
1-25 PR

TAB"C"

1-4" PVC 100 PAIR TELEPHONE
1-4" PVC 25 PAIR TELEPHONE
2-2" PVC CATV
1-2" PVC LAN

TAB"D"

1-4" PVC 50 PAIR TELEPHONE
2-4" PVC UNOFFICIAL TELEPHONE
1-2" PVC CATV
1-2" LAN
1-2" PVC W/PULLCORD

KEY: SYMBOLS

—— T —— COMMUNICATIONS UNDERGROUND DUCT BANK

—— E —— POWER UNDERGROUND DUCT BANK

H2 — 250 WATT HPS SHOEBOX FIXTURE MOUNTED ON 40'-0" ROUND TAPERED CONCRETE POLE. BASE STANDARD MOUNTED ON CONCRETE FOUNDATION.

H3 — 70 WATT HPS, BOLLARD FIXTURE MOUNTED ON CONCRETE BASE.

30 20 10 0 15 30 45 60
1"=30'-0"

JA JONES ENVIRONMENTAL TECHNOLOGY
JA JONES OF THE CAROLINAS
LOCKWOOD GREENE
Consulting·Design·Construction

DSGN	M. ALLEN	DR	B. PRICE
CHK	J. PHILLIPS	SUPV	C. CARROS
QA	B. STYRON	SUBMITTED BY (FIRM MEMBER TITLE)	
V.P.	03-MAY-1999 DATE		

TECHNICAL BRANCH

FPE

DRAWING REVISIONS

Rev.	Description	Prep By	Date	Approvd.
0	FINAL DESIGN SUBMITTAL	G.WEBB	03MAY99	B.STYRON
1	AS NOTED	APL	15JUL99	B.STYRON
2	ISSUE FOR RECORD	BWS	01JUN01	

MCAS
BEAUFORT, S.C.
BACHELOR ENLISTED QUARTERS - PHASE IV
ELECTRICAL SITE WORK
DATE
APPROVED

Naval Facilities Engineering Command
Southern Division
Charleston, South Carolina

ETD FOR COMMANDER, NAVFAC

RECORD DRAWING DATE

CODE I.D. NO. 80091
DRAWING SIZE: D
SPEC. NO.06-98-0690
CONSTRN. CONTR. NO. N62467-98-D-0690
NAVFAC DRAWING NO. 5364498
SHEET 42 OF 44
ESW-01

LCE-AT 05/30/01 16:50:36 00672910\ P:\40\esw0001.dwg 05040006 Scale:1=4.0

$$$$ USERNAME $$$$ $$$$ DATE&TIME $$$$ $$$$ DESIGN FILE NAME $$$$

NOTES:

1. PDP11-2, 2#10, 1#12G IN 2" PVC CONDUIT TO UTILITY BLDG. FOR UTILITY BLDG. LOCATION SEE DWG. ESW-01.

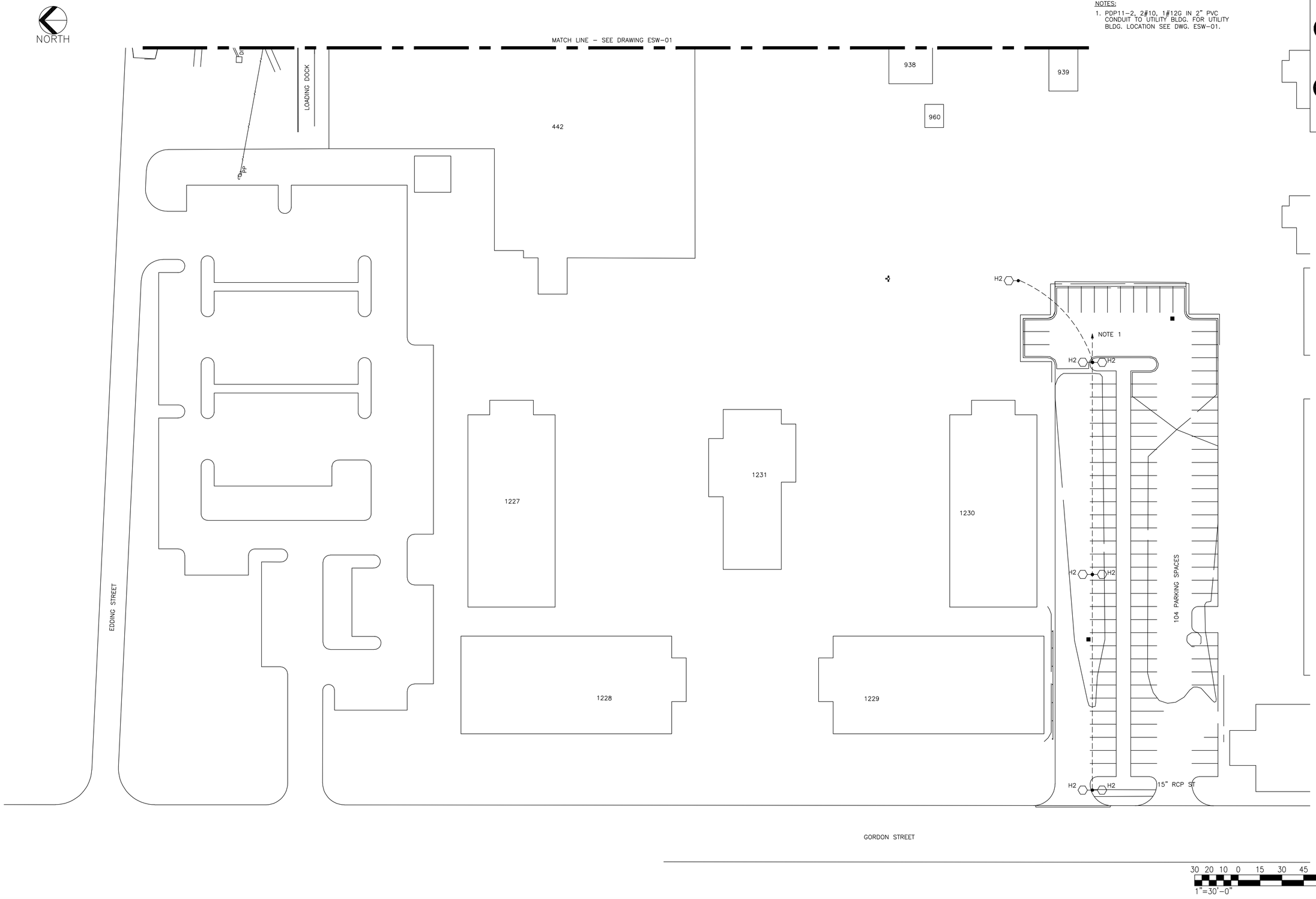

J.A. JONES MANAGEMENT SERVICES
J.A. JONES OF THE CAROLINAS
LOCKWOOD GREENE
Consulting•Design•Construction

DSGN	B.STYRON/CW	DR	B. PRICE
SUPV	C. CARROS	CHK	J. PHILLIPS
		CH ENGR	B. STYRON
SUBMITTED BY (FIRM MEMBER TITLE):			
TECHNICAL BRANCH		V.P.	03-MAY-1999 DATE
FPE			

DRAWING REVISIONS

Rev.	Description	Prep By	Date	Approvd.
0	FINAL DESIGN SUBMITTAL	M.ALLEN	03MAY99	B.STYRON
1	ISSUE FOR RECORD	BWS	01JUNE01	

MCAS BEAUFORT, S.C.

BACHELOR ENLISTED QUARTERS - PHASE IV

ELECTRICAL

SITE LIGHTING AND POWER PLAN

APPROVED DATE

Naval Facilities Engineering Command
Southern Division
Charleston, South Carolina

RECORD DRAWING DATE

CODE I.D. NO. 80091
DRAWING SIZE: D
SPEC. NO.06-98-0690
CONSTRN. CONTR. NO. N62467-98-D-0690
NAVFAC DRAWING NO. 5364499
SHEET 43 OF 44

ESW-02

ETD FOR COMMANDER, NAVFAC

LGE-AT 05/30/01 13:55:42 00672910\ P:\40\esw0002.dwg 05035067 Scale:1=4.0

$$$$ USERNAME $$$$ $$$$ DATE&TIME $$$$ $$$$ DESIGN FILE NAME $$$$

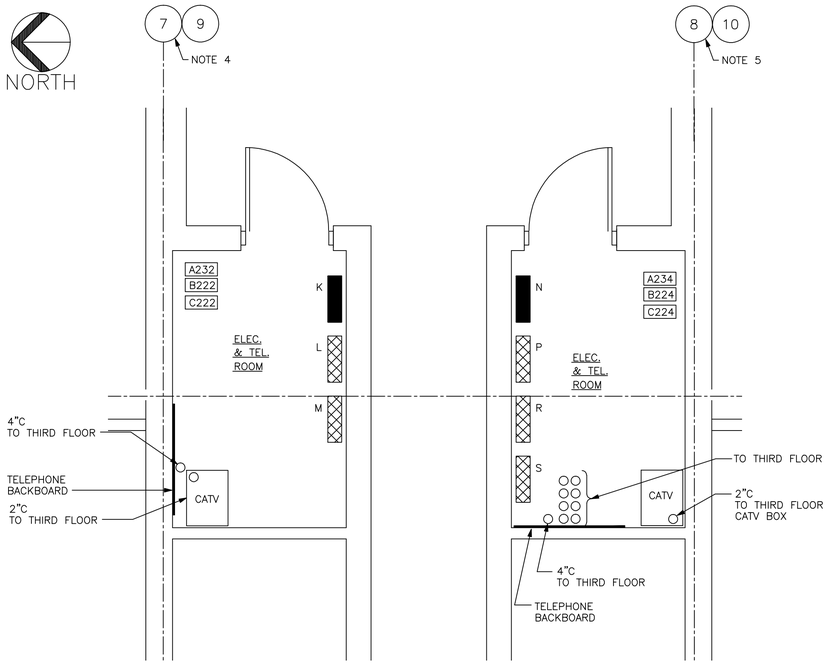

PARTIAL SECOND LEVEL @ BEQ "A", "B" & "C"
ELECTRICAL EQUIPMENT ROOM LAYOUT
3/8"=1'-0"

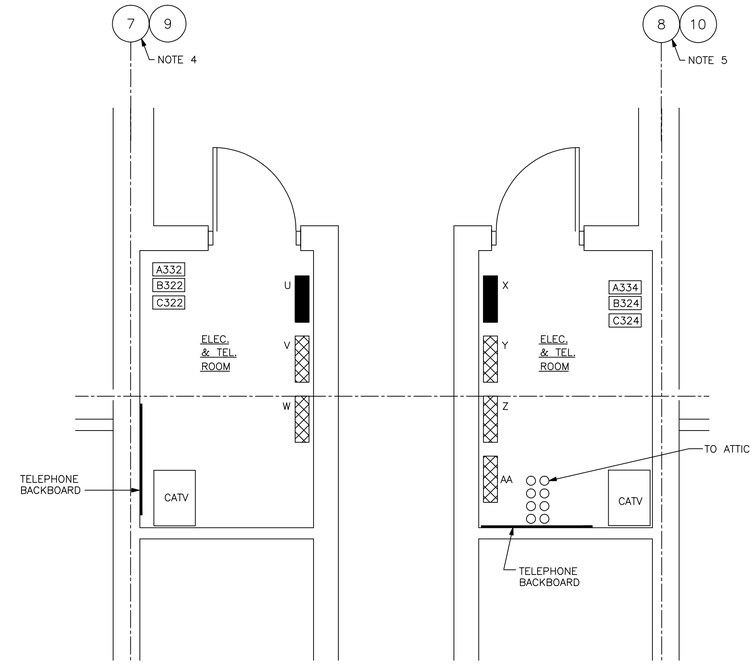

PARTIAL THIRD LEVEL @ BEQ "A", "B" & "C"
ELECTRICAL EQUIPMENT ROOM LAYOUT
3/8"=1'-0"

NOTES:

1. COORDINATE UNDERGROUND CONDUIT LOCATION WITH EQUIPMENT MANUFACTURER'S CERTIFIED SHOP DRAWINGS.
2. TERMINATE CONDUITS IN COUPLING FLUSH WITH TOP OF CONCRETE PAD. TERMINATE CABLE IN 3" LONG CONDUIT NIPPLE WITH CONDUIT SEALING BUSHING UTILIZING SEGMENTAL PRESSURE DISCS AND SPLIT NEOPRENE SEALING RING.
3. TERMINATE CONDUITS IN COUPLING FLUSH WITH TOP OF CONCRETE PAD AND PLUG.
4. FOR BEQ "B & C" COL. 7.
5. FOR BEQ "B & C" COL. 8.
6. FOR CONDUIT AND CABLE SCHEDULE. SEE SINGLE LINE DIAGRAM.
7. TWO SECTION SWITCHBOARD 90"Hx72"Wx24"D.
8. ONE SECTION SWITCHBOARD 90"Hx36"Wx24"D.
9. BEQ "A" WILL HAVE 8-4" CONDUITS ROUTED UNDERGROUND TO TRANSFORMER. BEQ "B" AND BEQ "C" WILL HAVE 6-4" CONDUITS ROUTED UNDERGROUND.
10. LOCATION OF INTERCOM JUNCTION BOX AND PA AMPLIFIER WILL BE DETERMINED DURING CONSTRUCTION.
11. CONDUITS STUBBING UP NEXT TO A BUILDING WALL WILL HAVE A MINIMUM CLEARANCE OF 1 INCH FROM CONDUIT EDGE TO WALL SURFACE.

REFERENCED DRAWINGS:

ESL-40 BEQ "A" SINGLE LINE DIAGRAM SHEET 1 OF 4
ESL-41 BEQ "B" SINGLE LINE DIAGRAM SHEET 2 OF 4
ESL-42 BEQ "C" SINGLE LINE DIAGRAM SHEET 3 OF 4
ESL-43 COMM. CENTER & UTIL. SINGLE LINE DIAGRAM SHEET 4 OF 4

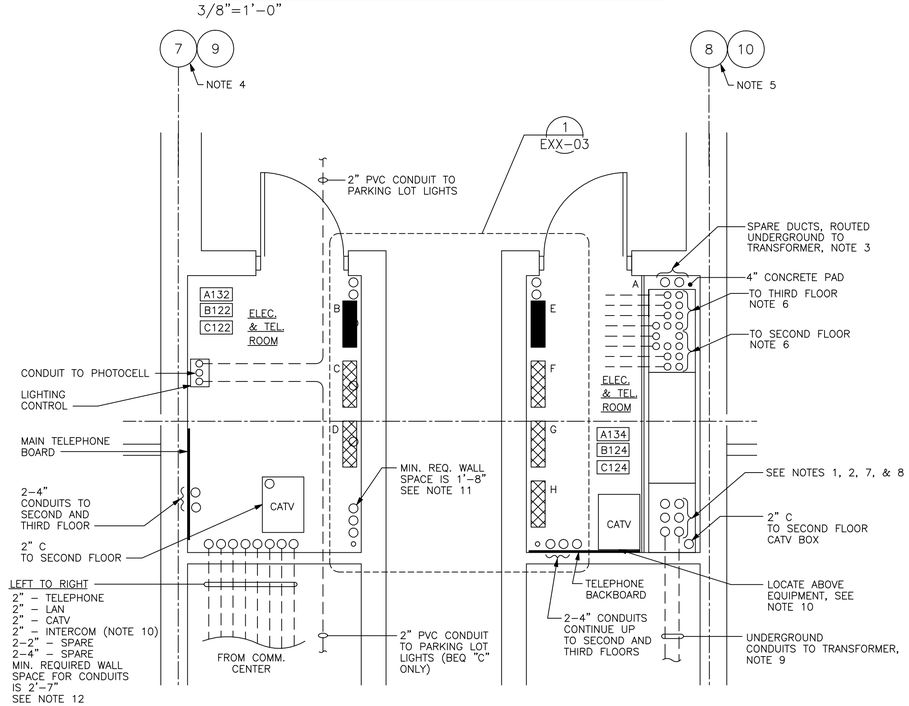

PARTIAL FIRST LEVEL @ BEQ "A", "B" & "C"
ELECTRICAL EQUIPMENT ROOM LAYOUT
3/8"=1'-0"

PANELBOARD DESIGNATION

	BUILDING								
	BEQ "A"			BEQ "B"			BEQ "C"		
MARK	RM #	PBRD	DWG. #	RM #	PBRD	DWG. #	RM #	PBRD	DWG. #
A	A134	PDP1 SEE NOTE 7	ESC-31	B124	PDP2 SEE NOTE 8	ESC-34	C124	PDP3 SEE NOTE 8	ESC-36
B	A132	PP1	ESC-31	B122	PP7	ESC-34	C122	PP13	ESC-36
C	A132	SP1	ESC-32	B122	SP16	ESC-35	C122	SP25	ESC-37
D	A132	SP2	ESC-32	B122	SP17	ESC-35	C122	SP26	ESC-37
E	A134	PP2	ESC-31	B124	PP8	ESC-34	C124	PP14	ESC-36
F	A134	SP3	ESC-32	B124	SP18	ESC-35	C124	SP27	ESC-37
G	A134	SP4	ESC-32	N/A	N/A	N/A	N/A	N/A	N/A
H	A134	SP5	ESC-32	N/A	N/A	N/A	N/A	N/A	N/A
J	N/A	N/A	N/A	N/A	N/A	N/A	N/A	N/A	N/A
K	A232	PP3	ESC-31	B222	PP9	ESC-34	C222	PP15	ESC-36
L	A232	SP6	ESC-32	B222	SP19	ESC-35	C222	SP28	ESC-37
M	A232	SP7	ESC-32	B222	SP20	ESC-35	C222	SP29	ESC-37
N	A234	PP4	ESC-31	B224	PP10	ESC-34	C224	PP16	ESC-36
P	A234	SP8	ESC-32	B224	SP21	ESC-35	C224	SP30	ESC-37
R	A234	SP9	ESC-32	N/A	N/A	N/A	N/A	N/A	N/A
S	A234	SP10	ESC-33	N/A	N/A	N/A	N/A	N/A	N/A
T	N/A	N/A	N/A	N/A	N/A	N/A	N/A	N/A	N/A
U	A332	PP5	ESC-31	B322	PP11	ESC-34	C322	PP17	ESC-36
V	A332	SP11	ESC-33	B322	SP22	ESC-35	C322	SP31	ESC-37
W	A332	SP12	ESC-33	B322	SP23	ESC-35	C322	SP32	ESC-37
X	A334	PP6	ESC-31	B334	PP12	ESC-34	C324	PP18	ESC-36
Y	A334	SP13	ESC-33	B324	SP24	ESC-35	C324	SP33	ESC-37
Z	A334	SP14	ESC-33	N/A	N/A	N/A	N/A	N/A	N/A
AA	A334	SP15	ESC-33	N/A	N/A	N/A	N/A	N/A	N/A
BB	ATTIC	PP19	EPP-27	ATTIC	PP20	EPP27	ATTIC	PP21	EPP-27

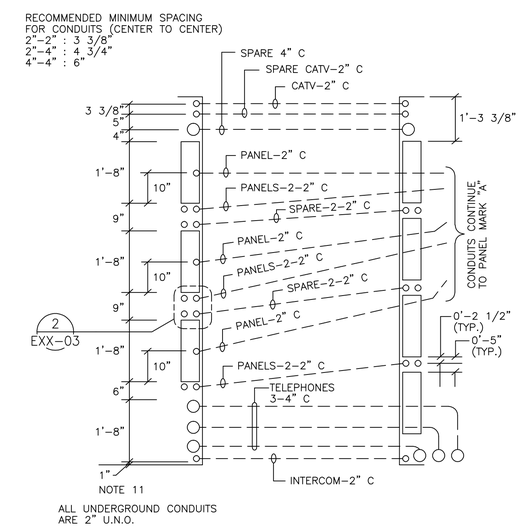

DETAIL 1 EXX-03
1"=1'-0"

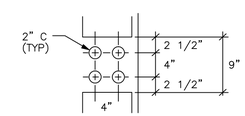

DETAIL 2 EXX-03
1"=1'-0"

0 1 2 3 4 5 6 7 8
3/8"=1'-0"

JA JONES OF THE CAROLINAS
LOCKWOOD GREENE
Consulting Design Construction

DSGN B. PAYNE	DR R. DAVIS	CHK B. STYRON	
SUPV C. CARROS	CH ENGR B. STYRON		
SUBMITTED BY (FRM MANAGER TITLE): V.P.			03-MAY-1999 DATE
TECHNICAL BRANCH			
FPE			

DRAWING REVISIONS

Rev.	Description	Prep By	Date	Apprvd.
0	FINAL DESIGN SUBMITTAL	G.WEBB	02MAY99	B.STYRON
1	ISSUE FOR RECORD	BWS	01JUN00	

MCAS BEAUFORT, S.C.
BACHELOR ENLISTED QUARTERS - PHASE IV
ELECTRICAL
BEQ "A", "B", & "C" LARGE SCALE ELECT & TEL RM PLANS
APPROVED DATE

Naval Facilities Engineering Command
Southern Division
Charleston, South Carolina

RECORD DRAWING DATE	
CODE I.D. NO.	80091
DRAWING SIZE:	D
SPEC. NO.	06-98-0690
CONSTRN. CONTR. NO.	N62467-98-D-0690
NAVFAC DRAWING NO.	5364500
SHEET ** OF **	
EXX-03	

EFD FOR COMMANDER, NAVFAC

$$$$ USERNAME $$$$ $$$$ DATE&TIME $$$$ $$$$ DESIGN FILE NAME $$$$