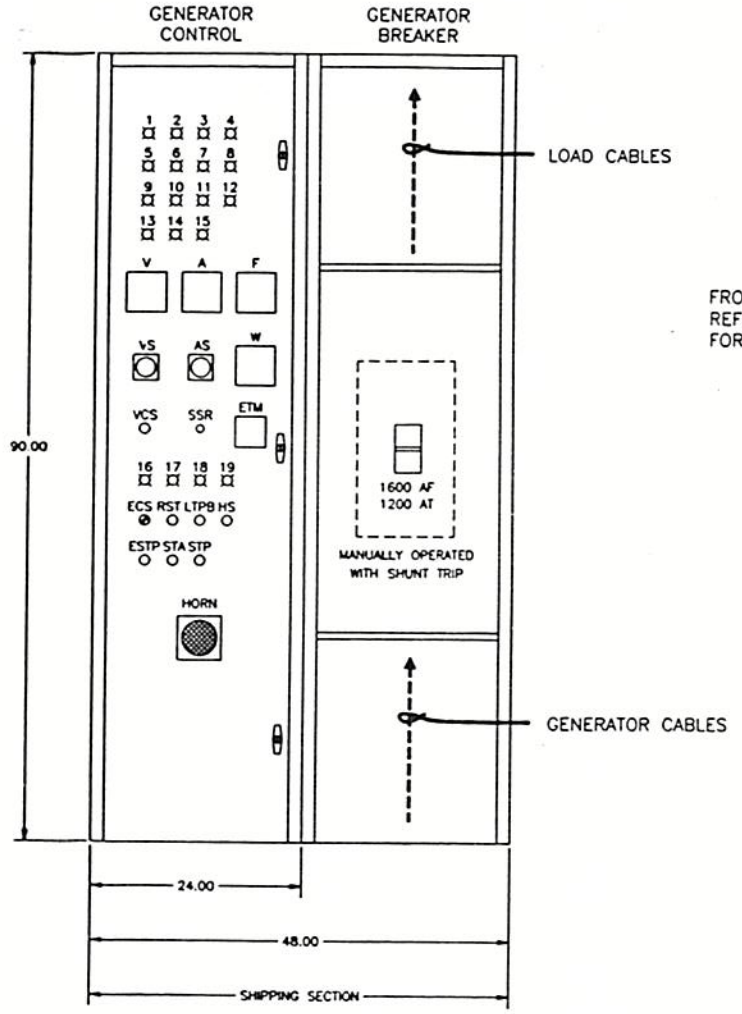

FRONT ACCESS ONLY
REFERENCE LOCAL CODES
FOR REQUIRED CLEARANCE

GENERATOR LEGEND

TAG	DESCRIPTION
A	AMMETER
AS	AMMETER SWITCH
ECS	ENGINE CONTROL SWITCH "MANUAL-OFF-AUTO"
ETM	ELAPSED TIME METER
ESTP	EMERGENCY STOP PUSHBUTTON(MUSHROOM)
F	FREQUENCY METER
HS	HORN SILENCE PUSHBUTTON
LTPB	LIGHT TEST PUSHBUTTON
RST	RESET PUSHBUTTON
SSR	SPEED SETTING RHEOSTAT
STA	MANUAL START PUSHBUTTON
STP	MANUAL STOP PUSHBUTTON
V	VOLTMETER
VCS	VOLTAGE CONTROL SWITCH "LOWER-RAISE"
VS	VOLTMETER SWITCH
W	WATTMETER

GENERATOR ALARM LIGHTS	LENS COLOR	POSITION	TAG
OVERCRANK	R	1	OCL
OVERSPEED SHUTDOWN	R	2	OSL
HIGH WATER TEMPERATURE SHUTDOWN	R	3	HWTL
LOW OIL PRESSURE SHUTDOWN	R	4	LOPL
OVERCURRENT TRIP	R	5	BAL
LOW WATER TEMPERATURE PRE-ALARM	A	6	LWTL
LOW WATER LEVEL SHUTDOWN	R	7	LWLL
HIGH WATER TEMPERATURE PRE-ALARM	A	8	AHWTL
LOW OIL PRESSURE PRE-ALARM	A	9	ALOPL
LOW FUEL LEVEL DAY TANK	A	10	LFLL
LOW FUEL LEVEL MAINTANK	A	11	LFML
HIGH BATTERY VOLTAGE	A	12	HBVL
BATTERY CHARGER MALFUNCTION	A	13	BFL
CONTROL NOT IN AUTO (FLASHING)	A	14	NAL
ENGINE RUNNING LIGHT	W	15	ERL
ENGINE IN COOL DOWN	W	16	CDL
CIRCUIT BREAKER OPEN/TRIPPED (FLASHING)	G	17	CBOL
CIRCUIT BREAKER CLOSED	R	18	CBCL
EMERGENCY STOP	R	19	ESTL

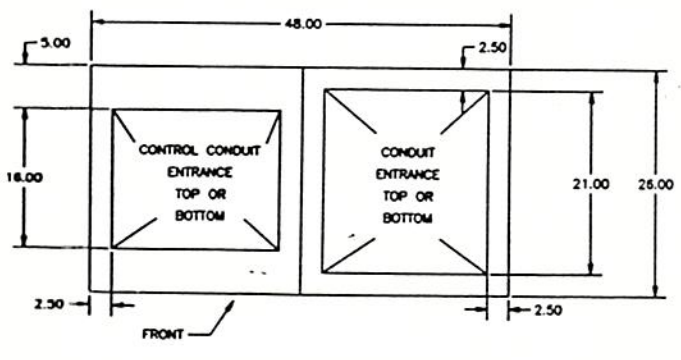

PLAN VIEW

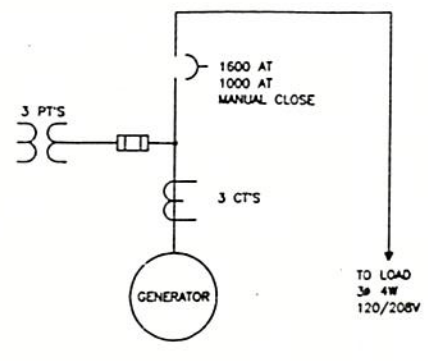

REV	DATE	REVISION	BY	
D	8-10-94	ADDED SHEET 2	MRM	X
C	7-27-92	POST SUBMITTAL	MRM	X
B	3-18-92	RESUBMITTAL	AJH	X
A	2-27-92	ADDED CB TRIP RATING	AJH	X

W.A. KRAFT

LEEDS
V.A. HOSPITAL

APPROVALS		DATE
DRAWN	AJH	1-17-92
CHECKED	PJG	2-27-94
APPROVED	PHILIP GULL	2-27-94

KOHLER CO. MF

GENERATOR DIVISION, KOHLER, WI 53044 U.S.A.

THIS DRAWING, IN DESIGN AND DETAIL, IS KOHLER CO. PROPERTY AND MUST NOT BE USED EXCEPT IN CONNECTION WITH KOHLER CO. WORK. ALL RIGHTS OF DESIGN OR INVENTION ARE RESERVED.

TITLE: OUTLINE DRAWING

SCALE: NONE | CAD NO. 263697A.DWG | SHEET 1 OF 2

PLOTTED: JUN 10 1994 | DWG. NO. 263697 | C

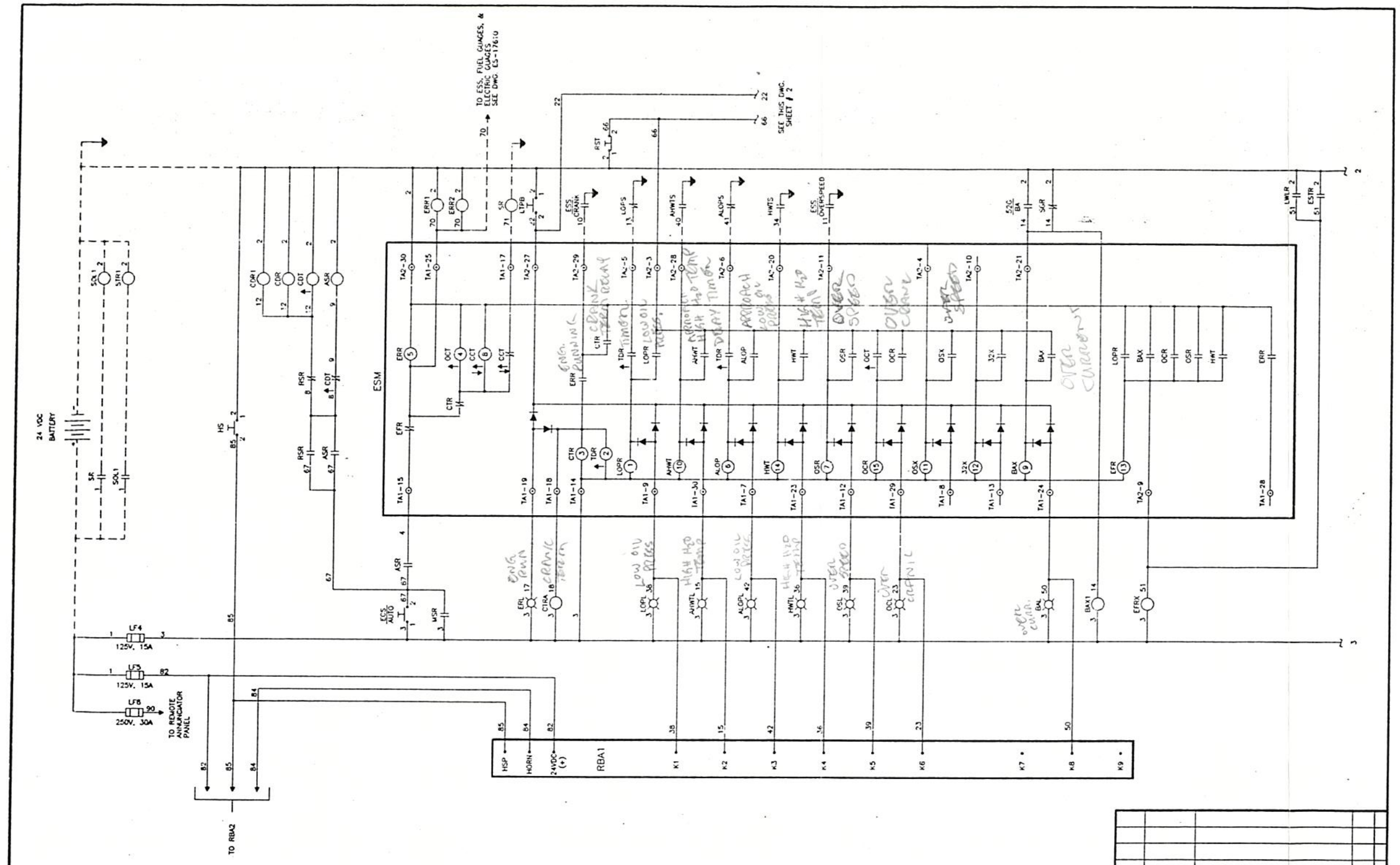

REV	DATE	REVISION	BY	M.F.
B	10-13-92	SEE SHEET TWO	AJH	X
A	7-27-92	POST SUBMITTAL	MRM	X

W.A. KRAFT

LEEDS
V.A. HOSPITAL

APPROVALS		DATE
DRAWN	AJH	1-29-92
CHECKED	PJG	8-27-92
APPROVED	Phil Gull	8-27-92

KOHLER CO. MF

GENERATOR DIVISION, KOHLER, WI 53044 U.S.A.

THIS DRAWING, IN DESIGN AND DETAIL, IS KOHLER CO. PROPERTY AND MUST NOT BE USED EXCEPT IN CONNECTION WITH KOHLER CO. WORK. ALL RIGHTS OF DESIGN OR INVENTION ARE RESERVED.

TITLE: D.C. SCHEMATIC
ENGINE W/GAUGE BOX

SCALE: NONE | CAD NO. 261436A.DWG | SHEET 1 OF 3

PLOTTED: OCT 13 1992 | DWG. NO. 261436 | C

OCT 13 1992

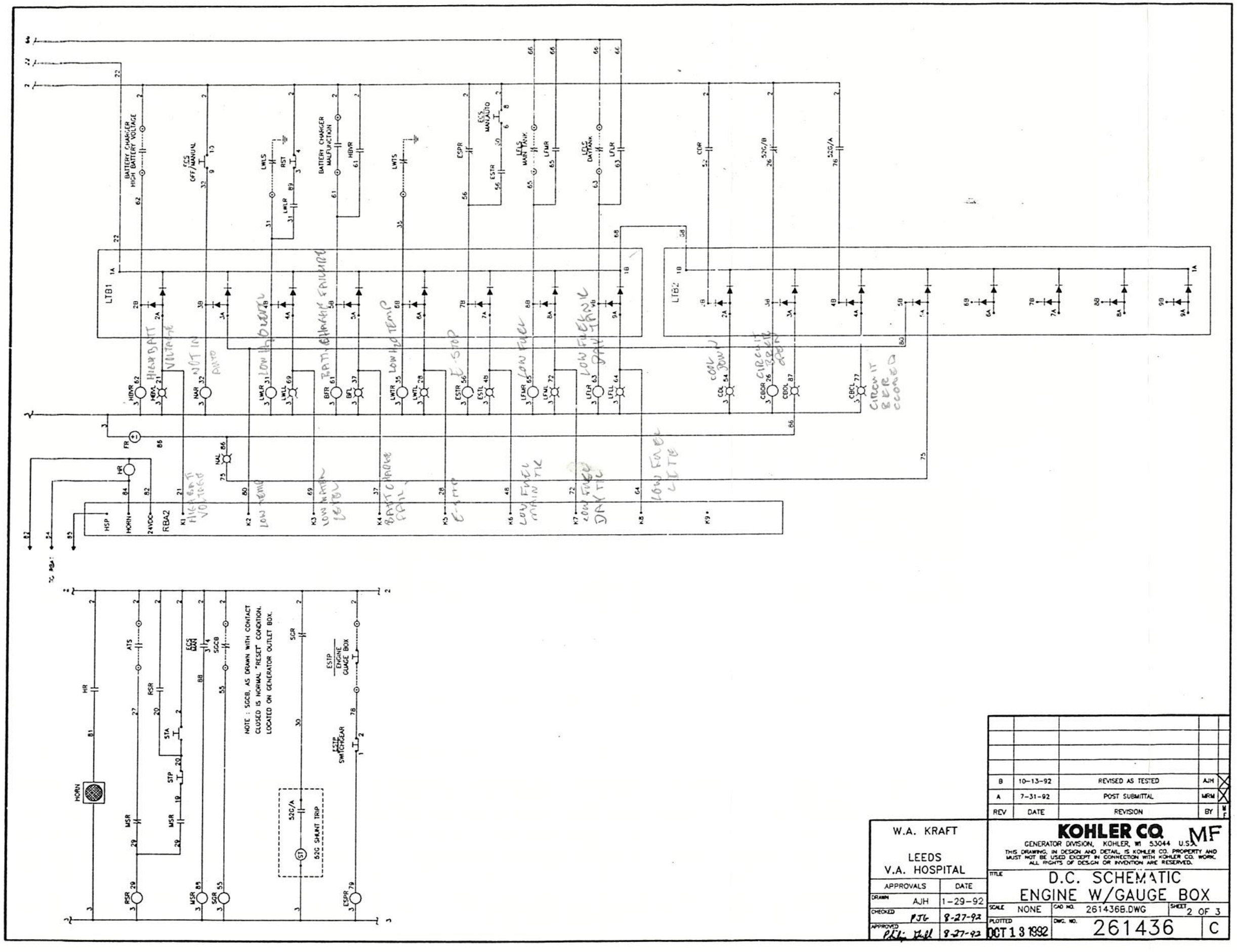

REV	DATE	REVISION	BY
B	10-13-92	REVISED AS TESTED	AJH
A	7-31-92	POST SUBMITTAL	MRM

W.A. KRAFT

LEEDS
V.A. HOSPITAL

APPROVALS	DATE
DRAWN AJH	1-29-92
CHECKED PJG	8-27-92
APPROVED Philip Gall	8-27-92

KOHLER CO. MF

GENERATOR DIVISION, KOHLER, WI 53044 U.S.A.

THIS DRAWING, IN DESIGN AND DETAIL, IS KOHLER CO. PROPERTY AND MUST NOT BE USED EXCEPT IN CONNECTION WITH KOHLER CO. WORK. ALL RIGHTS OF DESIGN OR INVENTION ARE RESERVED.

TITLE: D.C. SCHEMATIC
ENGINE W/GAUGE BOX

SCALE: NONE | CAD NO. 261436B.DWG | SHEET 2 OF 3

PLOTTED: OCT 13 1992 | DWG. NO. 261436 | C

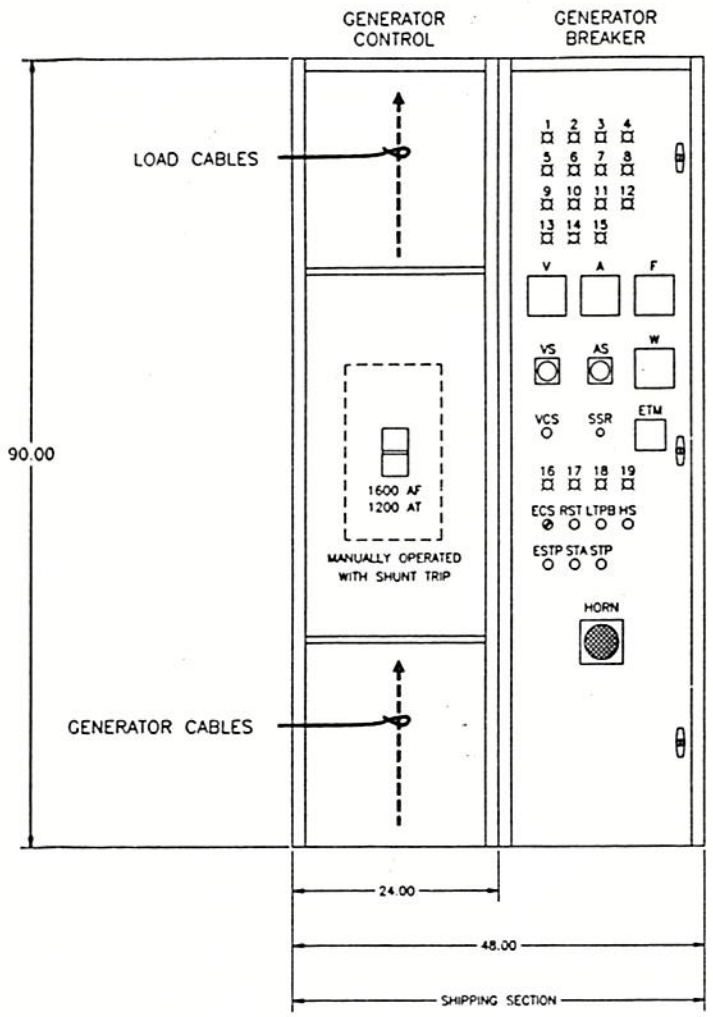

FRONT ACCESS ONLY
REFERENCE LOCAL CODES
FOR REQUIRED CLEARANCE

BUILDING - 1 WEST
BUILDING - 1 EAST
BUILDING - 12

GENERATOR LEGEND

TAG	DESCRIPTION
A	AMMETER
AS	AMMETER SWITCH
ECS	ENGINE CONTROL SWITCH "MANUAL-OFF-AUTO"
ETM	ELAPSED TIME METER
ESTP	EMERGENCY STOP PUSHBUTTON(MUSHROOM)
F	FREQUENCY METER
HS	HORN SILENCE PUSHBUTTON
LTPB	LIGHT TEST PUSHBUTTON
RST	RESET PUSHBUTTON
SSR	SPEED SETTING RHEOSTAT
STA	MANUAL START PUSHBUTTON
STP	MANUAL STOP PUSHBUTTON
V	VOLTMETER
VCS	VOLTAGE CONTROL SWITCH "LOWER-RAISE"
VS	VOLTMETER SWITCH
W	WATTMETER

GENERATOR ALARM LIGHTS

	LENS COLOR	POSITION	TAG
OVERCRANK	R	1	OCL
OVERSPEED SHUTDOWN	R	2	OSL
HIGH WATER TEMPERATURE SHUTDOWN	R	3	HWTL
LOW OIL PRESSURE SHUTDOWN	R	4	LOPL
OVERCURRENT TRIP	R	5	BAL
LOW WATER TERMPERATURE PRE-ALARM	A	6	LWTL
LOW WATER LEVEL SHUTDOWN	R	7	LWLL
HIGH WATER TEMPERATURE PRE-ALARM	A	8	AHWTL
LOW OIL PRESSURE PRE-ALARM	A	9	ALOPL
LOW FUEL LEVEL DAY TANK	A	10	LFLL
LOW FUEL LEVEL MAINTANK	A	11	LFML
HIGH BATTERY VOLTAGE	A	12	HBVL
BATTERY CHARGER MALFUNCTION	A	13	BFL
CONTROL NOT IN AUTO (FLASHING)	A	14	NAL
ENGINE RUNNING LIGHT	W	15	ERL
ENGINE IN COOL DOWN	W	16	CDL
CIRCUIT BREAKER OPEN/TRIPPED (FLASHING)	G	17	CBOL
CIRCUIT BREAKER CLOSED	R	18	CBCL
EMERGENCY STOP	R	19	ESTL

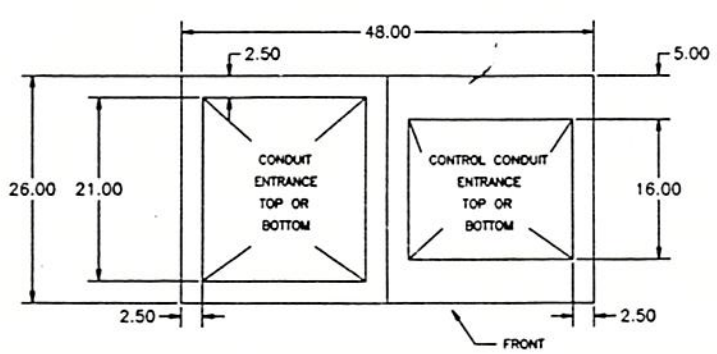

PLAN VIEW

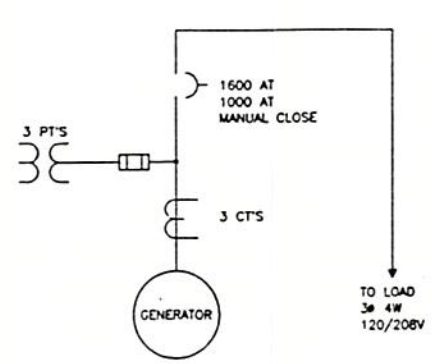

REV	DATE	REVISION	BY	
D	6-10-94	ADDED SHEET 2	MRM	X
C	7-27-92	POST SUBMITTAL	MRM	X
B	3-18-92	RESUBMITTAL	AJH	X
A	2-27-92	ADDED CB TRIP PLANNING	AJH	X

W.A. KRAFT

LEEDS
V.A. HOSPITAL

APPROVALS		DATE
DRAWN	MRM	1-17-92
CHECKED	PJG	2-27-94
APPROVED	PHILIP GULL	2-27-94

KOHLER CO. MF

GENERATOR DIVISION, KOHLER, WI 53044 U.S.A.

THIS DRAWING, IN DESIGN AND DETAIL, IS KOHLER CO. PROPERTY AND MUST NOT BE USED EXCEPT IN CONNECTION WITH KOHLER CO. WORK. ALL RIGHTS OF DESIGN OR INVENTION ARE RESERVED.

TITLE: OUTLINE DRAWING

SCALE: NONE | CAD NO. 263697B.DWG | SHEET 2 OF 2

PLOTTED: JUN 10 1994 | DWG. NO. 263697 | C

LEGEND

ADR - AIR DAMPER TRIP RELAY
AUS - AIR DAMPER CLOSE SWITCH
AHWT - APPROACHING HIGH WATER TEMPERATURE RELAY
AHWTL - APPROACHING HIGH WATER TEMPERATURE LIGHT
AHWTS - APPROACHING HIGH WATER TEMPERATURE SWITCH
ALOP - APPROACHING LOW OIL PRESSURE RELAY
ALOPL - APPROACHING LOW OIL PRESSURE LIGHT
ALOPS - APPROACHING LOW OIL PRESSURE SWITCH
ASR - AUTO START RELAY
BAL - OVERCURRENT TRIP LIGHT
BAX - OVERCURRENT TRIP AUX. RELAY
BFL - BATTERY CHARGER FAILURE LIGHT
BFR - BATTERY CHARGER FAILURE RELAY
CBAM - CIRCUIT BREAKER SWITCH "AUTO-MAN"
CBOR - CIRCUIT BREAKER OPEN
CCT - CYCLE CRANKING TIMER
CDL - COOL DOWN LIGHT
CDR - COOL DOWN RELAY
CDT - COOL DOWN TIMER
CPFL - CONTROL POWER FUSE BLOWN LIGHT
CPFR - CONTROL POWER FUSE BLOWN RELAY
CPFX - CONTROL POWER FUSE BLOWN AUX. RELAY
CTR - CRANK TERMINATE RELAY
ECS - ENGINE CONTROL SWITCH "RUN-OFF-AUTO"
EFR - ENGINE FAILURE RELAY
ESM - ENGINE START MODULE
ERL - ENGINE RUNNING LIGHT
ERR - ENGINE RUNNING RELAY
ESPR - EMERGENCY STOP AUX. RELAY
ESS - ENGINE ELECTRONIC SPEED SWITCH
ESTP - EMERGENCY STOP PUSHBUTTON
ESTR - EMERGENCY STOP RELAY
ESTL - EMERGENCY STOP/AIR DAMPER CLOSED LIGHT
FP - FAILURE TO PARALLEL RELAY
FPL - FAILURE TO PARALLEL LIGHT
FPT - FAILURE TO PARALLEL TIMER
G(1)X - GENERATOR BREAKER AUX. RELAY
HBVL - HIGH BATTERY VOLTAGE LIGHT
HR - HORN RELAY
HS - HORN SILENCE PUSHBUTTON
HWT - HIGH WATER TEMPERATURE RELAY
HWTL - HIGH WATER TEMPERATURE LIGHT
HWTS - HIGH WATER TEMPERATURE SWITCH
LF - LOW VOLTAGE FUSE
LFLL - LOW FUEL LEVEL/DAYTANK LIGHT
LFLR - LOW FUEL LEVEL/DAYTANK RELAY
LFLS - LOW FUEL LEVEL/DAYTANK SWITCH
LOPL - LOW OIL PRESSURE LIGHT
LOPR - LOW OIL PRESSURE RELAY
LOPS - LOW OIL PRESSURE SWITCH
LTB - LIGHT TEST BOARD
LTPB - LIGHT TEST PUSHBUTTON
LWLL - LOW WATER LEVEL LIGHT
LWLR - LOW WATER LEVEL RELAY
LWLS - LOW WATER LEVEL SWITCH
LWTR - LOW WATER TEMPERATURE RELAY
LWTL - LOW WATER TEMPERATURE LIGHT
LWTS - LOW WATER TEMPERATURE SWITCH
MSR - MANUAL START AUXILIARY RELAY
NAL - NOT IN AUTO LIGHT
NAR - NOT IN AUTO RELAY
OCL - OVERCRANK LIGHT
OCR - OVERCRANK RELAY
OCS - OVERCRANK SWITCH
OCT - OVERCRANK TIMER
OSL - OVERSPEED LIGHT
OSR - OVERSPEED RELAY
OSS - OVERSPEED SWITCH
RBA - RING BACK ALARM BOARD
RSR - REMOTE START RELAY
RST - RESET
SGCB - SAFEGUARD CIRCUIT BREAKER
SGR - SAFEGUARD RELAY
STA - MANUAL START PUSHBUTTON
STP - MANUAL STOP PUSHBUTTON
TDF - ENGINE FAULT DELAY TIMER
32 - GENERATOR REVERSE POWER RELAY
32L - REVERSE POWER LIGHT
32R - REVERSE POWER RELAY
52G/DA - OVERCURRENT TRIP C/B CONTACT

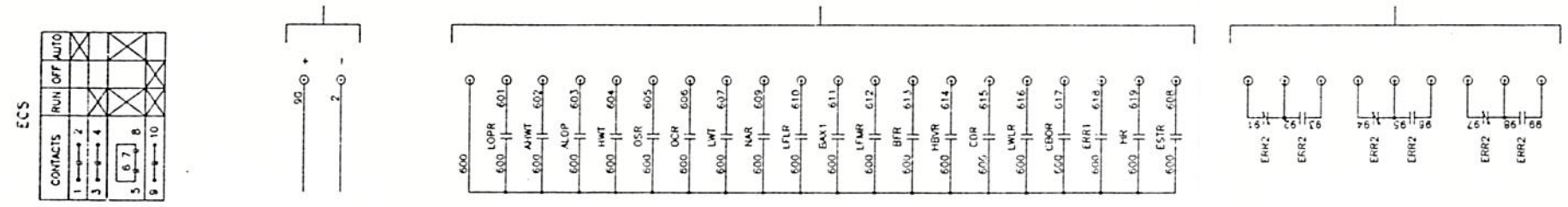

REV	DATE	REVISION	BY
B	10-13-92	SEE SHEET TWO	AJH
A	7-31-92	POST SUBMITTAL	MRM

W.A. KRAFT

LEEDS
V.A. HOSPITAL

APPROVALS		DATE
DRAWN	AJH	1-29-92
CHECKED	PJG	8-27-92
APPROVED	Philip Hull	8-27-92

KOHLER CO. MF

GENERATOR DIVISION, KOHLER, WI 53044 U.S.A.

THIS DRAWING, IN DESIGN AND DETAIL, IS KOHLER CO. PROPERTY AND MUST NOT BE USED EXCEPT IN CONNECTION WITH KOHLER CO. WORK. ALL RIGHTS OF DESIGN OR INVENTION ARE RESERVED.

TITLE: D.C. SCHEMATIC ENGINE W/GAUGE BOX

SCALE: NONE | CAD NO. 261436C.DWG | SHEET 3 OF 3

PLOTTED: OCT 13 1992 | DWG. NO. 261436 | C

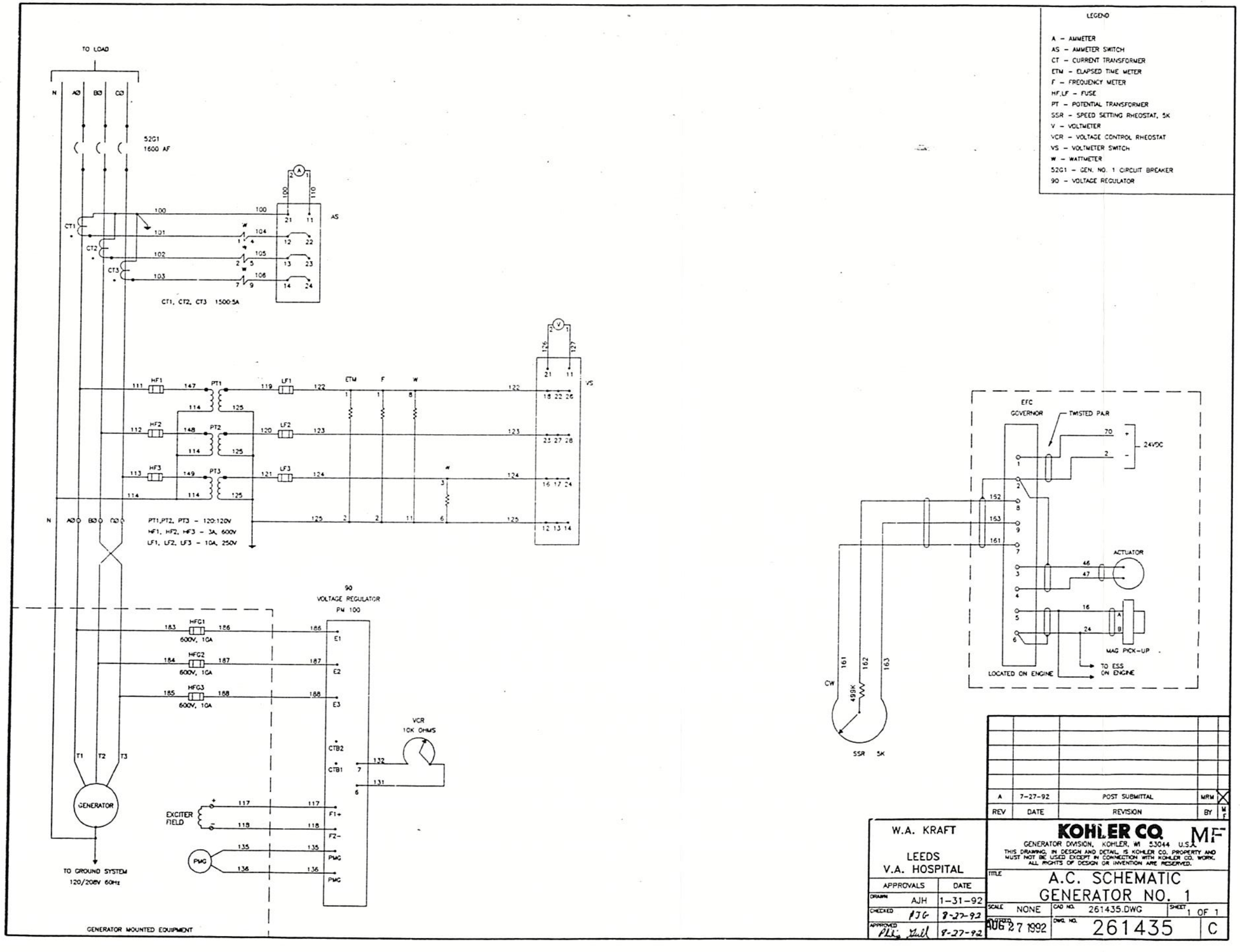
LEGEND
A – AMMETER
AS – AMMETER SWITCH
CT – CURRENT TRANSFORMER
ETM – ELAPSED TIME METER
F – FREQUENCY METER
HF,LF – FUSE
PT – POTENTIAL TRANSFORMER
SSR – SPEED SETTING RHEOSTAT, 5K
V – VOLTMETER
VCR – VOLTAGE CONTROL RHEOSTAT
VS – VOLTMETER SWITCH
W – WATTMETER
52G1 – GEN. NO. 1 CIRCUIT BREAKER
90 – VOLTAGE REGULATOR
TO LOAD
N
AØ
BØ
CØ
52G1
1600 AF
CT1
CT2
CT3
CT1, CT2, CT3 1500:5A
AS
VS
HF1
HF2
HF3
PT1
PT2
PT3
LF1
LF2
LF3
ETM
F
W
PT1,PT2, PT3 – 120:120V
HF1, HF2, HF3 – 3A, 600V
LF1, LF2, LF3 – 10A, 250V
90
VOLTAGE REGULATOR
PM 100
HFG1
HFG2
HFG3
600V, 10A
E1
E2
E3
CTB2
CTB1
F1+
F2–
PMG
VCR
10K OHMS
EXCITER FIELD
GENERATOR
T1
T2
T3
TO GROUND SYSTEM
120/208V 60Hz
GENERATOR MOUNTED EQUIPMENT
EFC
GOVERNOR
TWISTED PAIR
24VDC
ACTUATOR
MAG PICK-UP
TO ESS ON ENGINE
LOCATED ON ENGINE
CW
499K
SSR 5K
A 7-27-92 POST SUBMITTAL MRM
REV DATE REVISION BY
W.A. KRAFT
LEEDS
V.A. HOSPITAL
APPROVALS DATE
DRAWN AJH 1-31-92
CHECKED 8-27-92
APPROVED 8-27-92
KOHLER CO.
GENERATOR DIVISION, KOHLER, WI 53044 U.S.A.
THIS DRAWING, IN DESIGN AND DETAIL, IS KOHLER CO. PROPERTY AND MUST NOT BE USED EXCEPT IN CONNECTION WITH KOHLER CO. WORK. ALL RIGHTS OF DESIGN OR INVENTION ARE RESERVED.
TITLE
A.C. SCHEMATIC
GENERATOR NO. 1
SCALE NONE
CAD NO. 261435.DWG
SHEET 1 OF 1
AUG 27 1992
DWG. NO. 261435
C

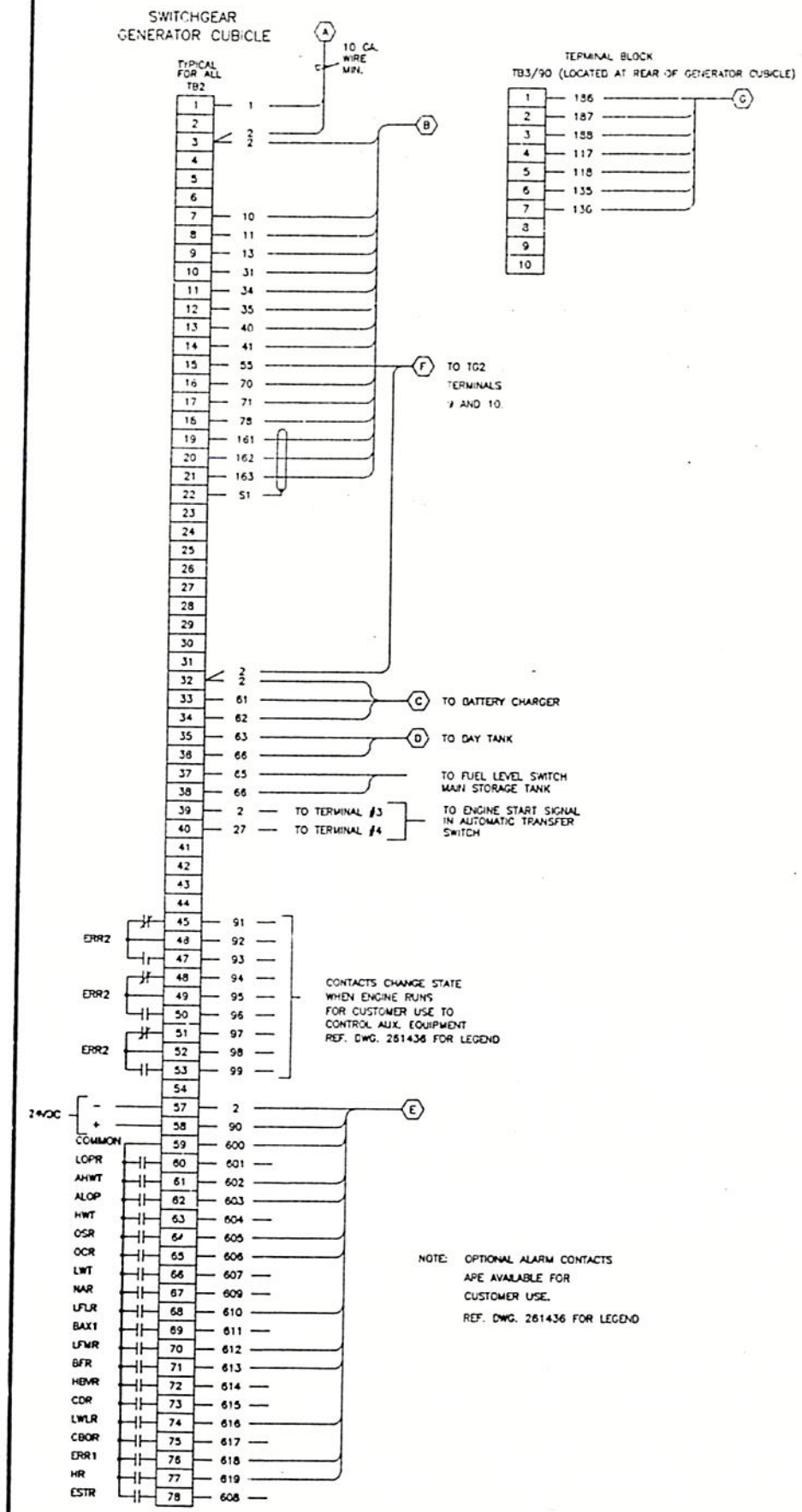

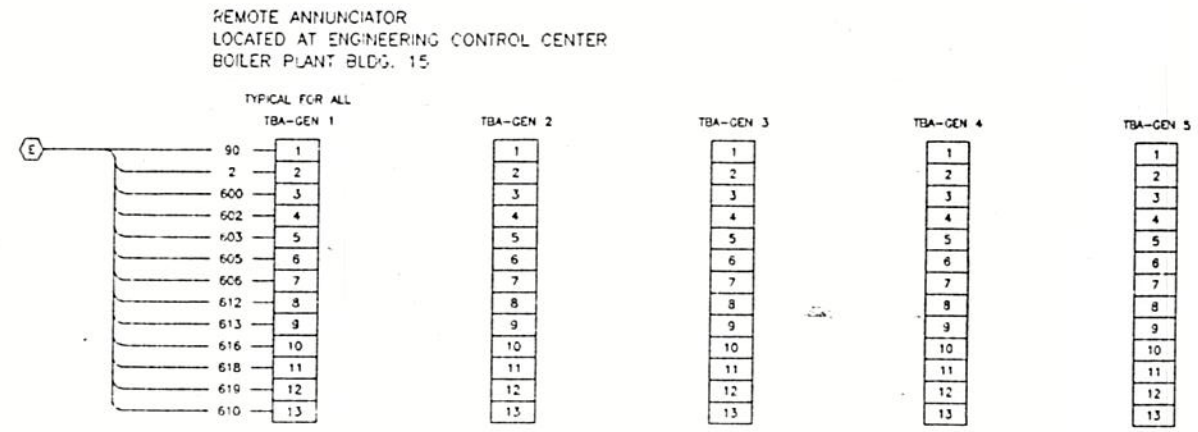

REV	DATE	REVISION	BY	W C
C	10-16-92	SEE SHEET 2	AJH	X
B	8-26-92	CHANGED INTERCONNECT	MRM	X
A	2-28-92	REDRAWN FOR SUBMITTAL	AJH	X

W.A. KRAFT

LEEDS
V.A. HOSPITAL

APPROVALS	DATE
DRAWN AJH	2-5-92
CHECKED PJG	8-27-92
APPROVED Philip Hall	8-27-92

KOHLER CO.
GENERATOR DIVISION, KOHLER, WI 53044 U.S.A.

THIS DRAWING, IN DESIGN AND DETAIL, IS KOHLER CO. PROPERTY AND MUST NOT BE USED EXCEPT IN CONNECTION WITH KOHLER CO. WORK. ALL RIGHTS OF DESIGN OR INVENTION ARE RESERVED.

MF

TITLE INTERCONNECT, CUSTOMER

SCALE NONE | CAD NO. 261682A.DWG | SHEET 1 OF 2

PLOTTED OCT 16 1992 | DWG. NO. 261682 | C

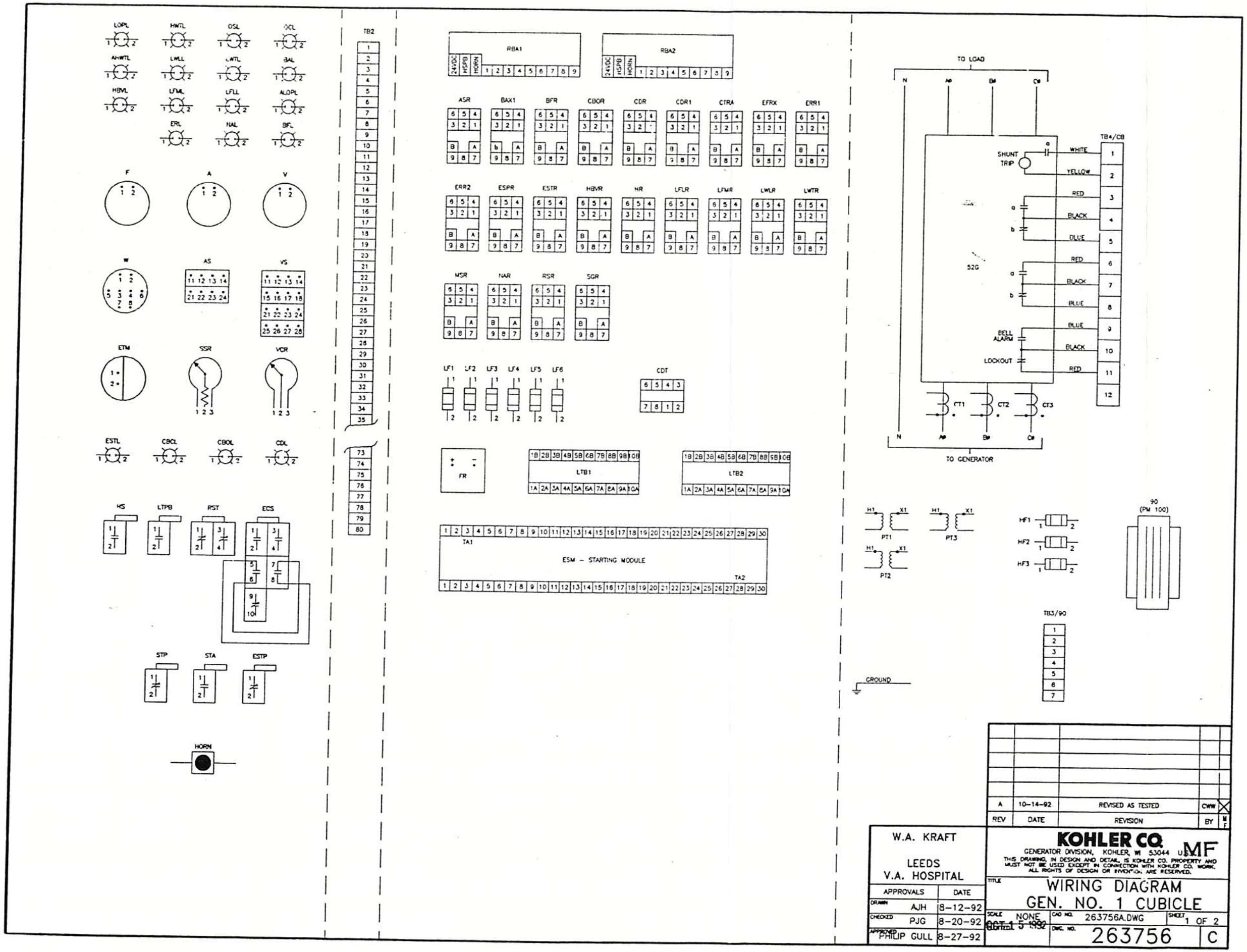

REV	DATE	REVISION	BY	MF
A	10-14-92	REVISED AS TESTED	CWW	X

W.A. KRAFT

LEEDS
V.A. HOSPITAL

APPROVALS		DATE
DRAWN	AJH	8-12-92
CHECKED	PJG	8-20-92
APPROVED	PHILIP GULL	8-27-92

KOHLER CO. MF

GENERATOR DIVISION, KOHLER, WI 53044 USA

THIS DRAWING, IN DESIGN AND DETAIL, IS KOHLER CO. PROPERTY AND MUST NOT BE USED EXCEPT IN CONNECTION WITH KOHLER CO. WORK. ALL RIGHTS OF DESIGN OR INVENTION ARE RESERVED.

TITLE: WIRING DIAGRAM
GEN. NO. 1 CUBICLE

SCALE: NONE | CAD NO. 263756A.DWG | SHEET 1 OF 2

OCT 15 1992

DWG. NO. 263756 | C

GENERATOR SET MOUNTED EQUIPMENT

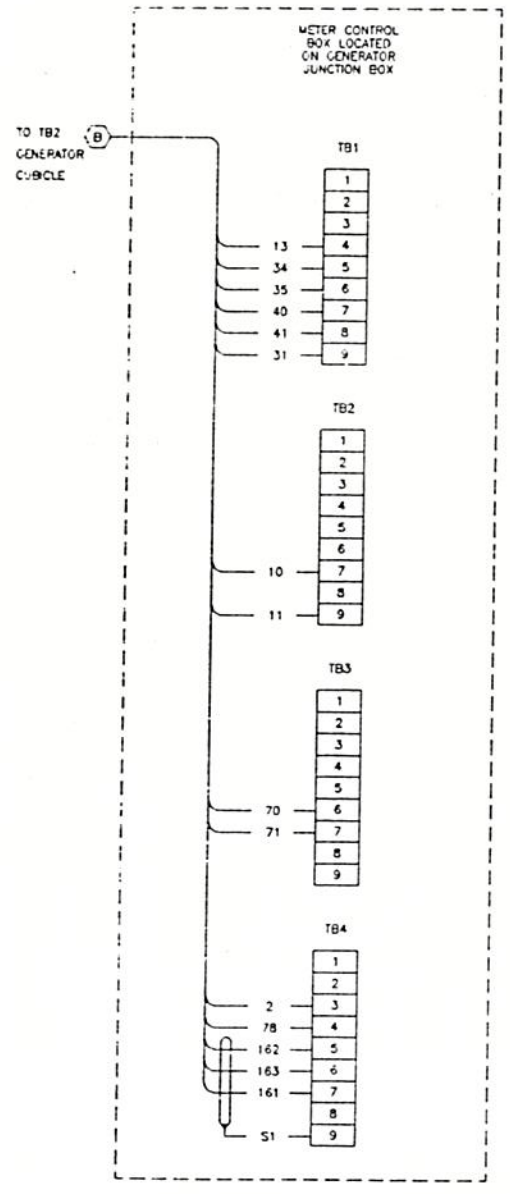

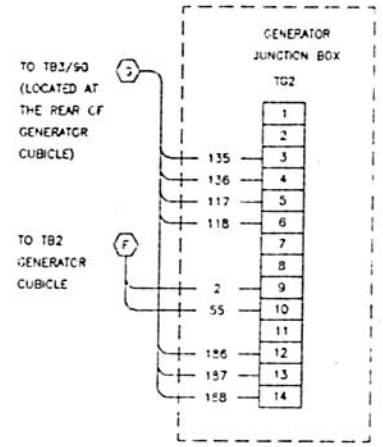

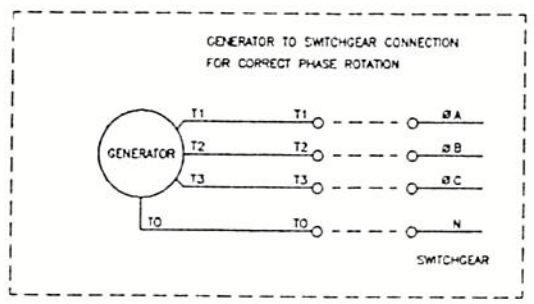

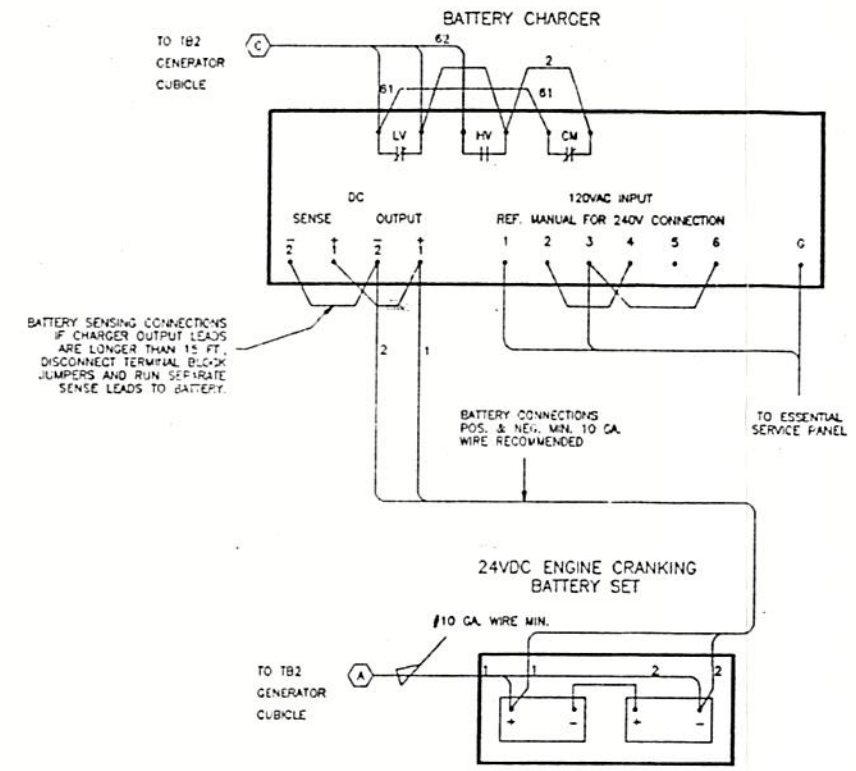

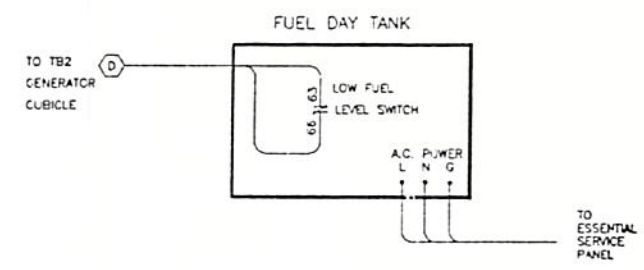

NOTES:
1. WIRE SIZE TO BE DETERMINED BY ACTUAL LOAD CURRENT
2. 14 GA STRANDED WIRE MIN. UNLESS OTHERWISE NOTED
3. INCLUDE 10% SPARE INTERCONNECT WIRES PER RUN
4. USE 3 CONDUCTOR SHIELDED LEAD WITH SEPARATE DRAIN WIRE, 18 GA. MIN.

REV	DATE	REVISION	BY	M F
C	10-16-92	REVISED PER ENGINEERING	AJH	X
B	8-26-92	CHANGED INTERCONNECT	MRM	X
A	2-28-92	REDRAWN FOR RESUBMITTAL	AJH	X

W.A. KRAFT

LEEDS
V.A. HOSPITAL

APPROVALS		DATE
DRAWN	AJH	2-5-92
CHECKED	PJG	8-27-92
APPROVED	Philip Gull	8-27-92

KOHLER CO. MF
GENERATOR DIVISION, KOHLER, WI 53044 U.S.A.

THIS DRAWING, IN DESIGN AND DETAIL, IS KOHLER CO. PROPERTY AND MUST NOT BE USED EXCEPT IN CONNECTION WITH KOHLER CO. WORK. ALL RIGHTS OF DESIGN OR INVENTION ARE RESERVED.

TITLE INTERCONNECT,CUSTOMER

SCALE NONE | CAD NO. 261682B.DWG | SHEET 2 OF 2

PLOTTED OCT 16 1992 | DWG. NO. 261682 | C

GEN. 1 DOOR

A

1	110	AS-11
2	130	AS-21
2	130	GROUND-

AHWTL

1	15	RBA1-K2
2	3	ALOPL-2
2	3	LWLL-2

ALOPL

1	42	RBA1-K3
2	3	AHWTL-2
2	3	LFLL-2

AS

11	110	A-1
12	104	AS-22
12	134	V-4
13	105	AS-23
13	105	V-5
14	106	AS-24
14	136	V-9
21	130	A-2
22	104	AS-12
23	105	AS-13
24	136	AS-14

BAL

1	50	RBA1-K8
2	3	LOPL-2
2	3	LWTL-2

BFL

1	37	RBA2-K4
2	3	ERL-2
2	3	HBVL-2

CBCL

1	77	LTB2-4A
2	3	CDL-2
2	3	ESTL-2

CBOL

1	87	LTB2-3A
2	86	NAL-2

CDL

1	54	LTB2-2A
2	3	CBCL-2
2	3	ERL-2

ECS

1	3	ESTL-2
1	3	HORN-1
2	67	ASR-4
3	88	MSR-A
4	2	ECS-10
4	2	ECS-8
5	2	RST-4
6	60	ESTR-4
8	2	ECS-4
9	32	NAR-A
10	2	ASR-A
10	2	ECS-4

ERL

1	17	TA1-19
2	3	BFL-2
2	3	CDL-2

ESTL

1	48	RBA2-K6
2	3	CBCL-2
2	3	ECS-1

ESTP

1	79	ESPR-A
2	78	TB2-18

ETM

1	122	V-8
2	125	V-6

F

1	122	LF1-2
1	122	VS-18
2	125	GROUND-
2	125	VS-14

GEN. 1 DOOR

HBVL

1	21	RBA2-K1
2	3	BFL-2
2	3	LFML-2

HORN

1	3	ECS-1
2	81	HR-4

HS

1	2	LTPB-1
1	2	STA-1
2	85	RBA1-HSP

HWTL

1	36	RBA1-K4
2	3	LOPL-2
2	3	OSL-2

LFLL

1	64	RBA2-K8
2	3	ALOPL-2
2	3	LFML-2

LFML

1	72	RBA2-K7
2	3	HBVL-2
2	3	LFLL-2

LOPL

1	38	RBA1-K1
2	3	BAL-2
2	3	HWTL-2

LTPB

1	2	HS-1
1	2	RST-1
2	22	LTB1-1A

LVLL

1	69	RBA2-K3
2	3	AHWTL-2
2	3	LWTL-2

LWTL

1	28	RBA2-K5
2	3	BAL-2
2	3	LWLL-2

NAL

1	75	LTB2-5A
2	86	CBCL-2
2	86	FR-(-)

OCL

1	23	RBA1-K6
2	3	BAX1-B
2	3	OSL-2

OSL

1	39	RBA1-K5
2	3	HWTL-2
2	3	OCL-2

RST

1	2	LTPB-1
1	2	RST-4
2	66	LFLR-4
3	89	LWLR-4
4	2	ECS-5
4	2	RST-1

SSR

1	161	TB2-19	S1
2	162	TB2-20	S1
3	163	TB2-21	S1

STA

1	2	HS-1
2	20	RSR-5
2	20	STP-1

STP

1	20	STA-2
2	19	MSR-4

GEN. 1 DOOR

V

1	127	VS-11
2	126	VS-21

VCR

1	132	90-7
2	131	90-6

VS

11	127	V-1
12	125	VS-13
12	125	V-11
13	125	VS-12
13	125	VS-14
14	125	F-2
14	125	VS-13
16	124	VS-17
16	124	VS-24
17	124	LF3-2
17	124	VS-16
18	122	F-1
18	122	VS-26
21	126	V-2
22	122	VS-26
22	122	V-8
23	123	VS-27
24	124	VS-16
24	124	V-3
26	122	VS-18
26	122	VS-22
27	123	VS-23
27	123	VS-28
28	123	LF2-2
28	123	VS-27

W

1	101	CT1-X1
2	102	CT2-X1
3	124	VS-24
4	104	AS-12
5	105	AS-13
6	125	ETM-2
6	125	W-11
7	103	CT3-X1
8	122	ETM-1
8	122	VS-22
9	106	AS-14
11	125	VS-12
11	125	W-6

GEN. 1 TERM. BLOCK

TB2

1	1	LF6-1	
3	2	TA2-30	
3	2	TB2-32	
5	3	TA1-14	
5	3	TB4/CB-2	
7	10	TA2-29	
8	11	TA2-11	
9	13	TA2-5	
10	31	LTB1-4B	
11	34	TA2-20	
12	35	LTB1-6B	
13	40	TA2-28	
14	41	TA2-6	
15	55	SGR-A	
16	70	TA1-25	
17	71	TA1-17	
18	78	ESTP-2	
19	161	SSR-1	S1
20	162	SSR-2	S1
21	163	SSR-3	S1
22	51	S1-	S1
32	2	TB2-3	
32	2	TB2-39	
33	61	LTB1-5B	
34	62	LTB1-2B	
35	63	LTB1-9B	
36	66	TA2-3	
36	66	TB2-38	
37	65	LTB1-8B	
38	66	TB2-36	
39	2	TB2-32	
39	2	TB2-57	
40	27	MSR-1	
45	91	ERR2-1	
46	92	ERR2-7	
47	93	ERR2-4	
48	94	ERR2-2	
49	95	ERR2-8	
50	96	ERR2-5	
51	97	ERR2-3	
52	98	ERR2-9	
53	99	ERR2-6	
57	2	TB2-39	
57	2	TB4/CB-10	
58	90	LF6-2	
59	600	TA2-25	
60	601	TA1-6	
61	602	TA1-27	
62	603	TA1-4	
63	604	TA2-19	
64	605	TA1-11	
65	606	TA2-26	
66	607	LWTR-6	
67	609	NAR-6	
68	610	LFLR-6	
69	611	BAX1-6	
70	612	LFMR-6	
71	613	BFR-6	
72	614	HBVR-6	
73	615	CDR-6	
74	616	LWLR-6	
75	617	CBOR-6	
76	618	ERR1-6	
77	619	HR-6	
78	608	ESTR-6	

GEN. 1 CONTROLS

ASR

4	67	ASR-5
4	67	ECS-2
5	67	ASR-4
5	67	MSR-6
7	4	TA1-15
8	8	RSR-7
A	2	CDR-A
A	2	ECS-10
B	9	CDT-4

BAX1

6	611	TB2-69
9	600	BFR-9
A	14	SGR-2
B	3	BFR-B
B	3	DCL-2

BFR

6	613	TB2-71
9	600	BAX1-9
9	600	CBOR-9
A	61	HBVR-4
B	3	BAX1-B
B	3	CBOR-B

CBOR

6	617	TB2-75
9	600	BFR-9
9	600	CDR-9
A	26	LTB2-3B
B	3	BFR-B
B	3	CTRA-B

CDR

4	52	LTB2-2B
6	615	TB2-73
7	2	CDR-A
7	2	CDR1-A
9	600	CBOR-9
9	600	ERR1-9
A	2	ASR-A
A	2	CDR-7
B	12	CDR1-B

CDR1

A	2	CDR-7
A	2	ERR1-A
B	12	CDR-B
B	12	RSR-1

CDT

1	8	RSR-7
2	12	RSR-1
4	9	ASR-B
7	2	SGR-7
7	2	TA2-30

CIRA

A	18	TA1-18
B	3	CBOR-B
B	3	EFRX-B

EFRX

A	51	ESTR-5
B	3	CTRA-B
B	3	ESPR-B

ERR1

6	618	TB2-76
9	600	CDR-9
9	600	ESTR-9
A	2	CDR1-A
A	2	ERR2-A
B	70	ERR2-B

ERR2

1	91	TB2-45
2	94	TB2-48
3	97	TB2-51
4	93	TB2-47
5	96	TB2-50
6	99	TB2-53
7	92	TB2-46
8	95	TB2-49
9	98	TB2-52
A	2	ERR1-A
A	2	ESPR-7
B	70	ERR1-B
B	70	TA1-25

GEN. 1 CONTROLS

ESPR

1	56	ESTR-A
7	2	ERR2-A
7	2	ESTR-B
A	79	ESTP-1
B	3	EFRX-B
B	3	ESTR-B

ESTR

1	60	ECS-6
5	51	EFRX-A
5	51	LVLR-5
6	608	TB2-78
7	56	ESTR-A
7	56	LTB1-7B
B	2	CSPR-7
B	2	HBVR-7
9	600	ERR1-9
9	600	HBVR-9
A	56	ESPR-1
A	56	ESTR-7
B	3	ESTR-B
B	3	HBVR-B

FR

(+)	3	LF4-2
(+)	3	TA1-14
(-)	86	NAL-2

HBVR

4	61	BFR-A
4	61	LTB1-5B
6	614	TB2-72
7	2	ESTR-B
7	2	HR-7
9	600	ESTR-9
9	600	HR-9
A	62	LTB1-2B
B	3	ESTR-B
B	3	LFLR-B

HR

4	81	HORN-2
6	619	TB2-77
7	2	HBVR-7
7	2	LWLR-8
9	600	HBVR-9
9	600	LFLR-9
A	84	RBA2-HRN
B	82	LF5-2
B	82	RBA2-24V

LF1

1	119	PT1-X1
2	122	F-1

LF2

1	120	PT2-X1
2	123	VS-28

LF3

1	121	PT3-X1
2	124	VS-17

LF4

1	1	LF5-1
2	3	FR-(+)
2	3	SGR-B

LF5

1	1	LF4-1
1	1	LF6-1
2	82	HR-8

LF6

1	1	LF5-1
1	1	TB2-1
2	90	TB2-58

LFLR

4	66	LFMR-4
4	66	RST-2
6	610	TB2-68
7	63	LFLR-A
7	63	LTB1-9B
9	600	HR-9
9	600	LFMR-9
A	63	LFLR-7
B	3	HBVR-B
B	3	LFMR-B

GEN. 1 CONTROLS

LFMR

4	66	LFLR-4
4	66	TA2-3
6	612	TB2-70
7	65	LFMR-A
7	65	LTB1-8B
9	600	LFLR-9
9	600	LWLR-9
A	65	LFMR-7
B	3	LFLR-B
B	3	LWLR-B

LTB1

A	22	LTPB-2
1A	22	TA2-27
1B	63	LTB2-1B
2A	21	RBA2-K1
2B	62	HBVR-A
2B	62	TB2-34
3A	80	RBA2-K2
3B	32	NAR-A
4A	69	RBA2-K3
4B	31	LWLR-7
4B	31	TB2-10
5A	37	RBA2-K4
5B	61	HBVR-4
5B	61	TB2-33
6A	28	RBA2-K5
6B	35	LWTR-A
6B	35	TB2-12
7A	49	RBA2-K6
7B	56	ESTR-7
8A	72	RBA2-K7
8B	65	LFMR-7
8B	65	TB2-37
9A	64	RBA2-K8
9B	63	LFLR-7
9B	63	TB2-35

LTB2

1B	68	LTB1-1B
2A	54	CDL-1
2B	52	CDR-4
3A	87	CBCL-1
3B	86	CBOR-A
3B	26	TB4/CB-5
4A	77	CBCL-1
4B	76	TB4/CB-3
5A	75	NAL-1
5B	80	RBA2-K2

LVLR

4	89	RST-3
5	51	ESTR-5
5	51	TA2-9
6	616	TB2-74
7	31	LTB1-4B
7	31	LWLR-A
8	2	HR-7
8	2	RSR-8
9	600	LFMR-9
9	600	LWTR-9
A	31	LWLR-7
B	3	LFMR-B
B	3	LWTR-B

LWTR

6	607	TB2-66
9	600	LWLR-9
9	600	NAR-9
A	35	LTB1-6B
B	3	LWLR-B
B	3	MSR-B

MSR

1	27	TB2-40
4	19	STP-2
6	67	ASR-5
6	67	RSR-4
7	29	RSR-A
9	3	MSR-B
9	3	NAR-B
A	88	ECS-3
B	3	LWTR-B
B	3	MSR-9

NAR

6	609	TB2-67
9	600	LWTR-9
9	600	TA1-5
A	32	ECS-9
A	32	LTB1-3B
B	3	MSR-9
B	3	RSR-B

GEN. 1 CONTROLS

RBA1

K1	39	LOPL-1
K1	38	TA1-9
K2	15	AHWTL-1
K2	15	TA1-30
K3	42	ALOPL-1
K3	42	TA1-7
K4	36	HWTL-1
K4	36	TA1-23
K5	39	OSL-1
K5	39	TA1-12
K6	23	OCL-1
K6	23	TA1-29
K8	50	BAL-1
K8	50	TA1-24
24V	82	RBA2-24V
HRN	84	RBA2-HRN
HSP	85	HS-2
HSP	85	RBA2-HSP

RBA2

K1	21	HBVL-1
K1	21	LTB1-2A
K2	80	LTB1-3A
K2	80	LTB2-5B
K3	69	LTB1-4A
K3	69	LVLL-1
K4	37	BFL-1
K4	37	LTB1-5A
K5	28	LTB1-6A
K5	28	LWTL-1
K6	49	ESTL-1
K6	49	LTB1-7A
K7	72	LFML-1
K7	72	LTB1-8A
K8	64	LFLL-1
K8	64	LTB1-9A
24V	83	HR-8
24V	82	RBA1-24V
HRN	84	HR-A
HRN	84	RBA1-HRN
HSP	85	RBA1-HSP

RSR

1	12	CDR1-B
1	12	CDT-2
4	67	MSR-6
5	20	STA-2
7	8	ASR-B
7	8	CDT-1
8	2	LWLR-8
8	2	SGR-B
A	29	MSR-7
B	3	NAR-B
B	3	SGR-B

SGR

1	30	TB4/CB-1
2	14	BAX1-A
2	14	TA2-21
7	2	CDT-7
7	2	SGR-B
8	2	RSR-8
8	2	SGR-7
A	55	TB2-15
B	3	LF4-2
B	3	RSR-B

TA1

3	600	TA1-26
3	600	TA2-18
4	603	TB2-62
5	600	NAR-9
5	600	TA1-10
6	601	TB2-60
7	42	RBA1-K3
9	38	RBA1-K1
10	600	TA1-26
10	600	TA1-5
11	605	TB2-64
12	39	RBA1-K5
14	3	FR-(+)
14	3	TB2-5
15	4	ASR-7
17	71	TB2-17
18	18	CTRA-A
19	17	ERL-1
23	36	RBA1-K4
24	50	RBA1-K8
25	70	ERR2-B
25	70	TB2-16
26	600	TA1-10
26	600	TA1-3
27	602	TB2-61
29	23	RBA1-K6
30	15	RBA1-K2

GEN. 1 TA2

3	66	LFMR-4
3	66	TB2-36
5	13	TB2-9
6	41	TB2-14
9	51	LWLR-5
11	11	TB2-8
18	600	TA1-3
18	600	TA2-25
19	604	TB2-63
20	34	TB2-11
21	14	SGR-2
21	14	TB4/CB-9
25	600	TA2-18
25	600	TB2-59
26	606	TB2-65
27	22	LTB1-1A
28	40	TB2-13
29	10	TB2-7
30	2	CDT-7
30	2	TB2-3

GEN. 1 BUS

90

6	131	VCR-2
7	132	VCR-1
E1	186	TB3/90-1
E2	187	TB3/90-2
E3	188	TB3/90-3
F1+	117	TB3/90-4
F2-	118	TB3/90-5
PMG	135	TB3/90-6
PMG	136	TB3/90-7

HF1

1	111	BUS-A
2	147	PT1-H1

HF2

1	112	BUS-B
2	148	PT2-H1

HF3

1	113	BUS-C
2	149	PT3-H1

PT1

H1	147	HF1-2
H2	114	BUS-N
H2	114	PT2-H2
X1	119	LF1-1
X2	125	GROUND-
X2	125	PT2-X2

PT2

H1	148	HF2-2
H2	114	PT1-H2
H2	114	PT3-H2
X1	120	LF2-1
X2	125	PT1-X2
X2	125	PT3-X2

PT3

H1	149	HF3-2
H2	114	PT2-H2
X1	121	LF3-1
X2	125	PT2-X2

GEN. 1 CIRCUIT BRKR.

CT1

X1	101	V-1
X2	100	CT2-X2
X2	100	GROUND-

CT2

X1	102	V-2
X2	100	CT1-X2
X2	100	CT3-X2

CT3

X1	103	V-7
X2	100	CT2-X2

GROUND

100	A-2
100	CT1-X2
125	F-2
125	PT1-X2

TB3/90

1	186	90-E1
2	187	90-E2
3	188	90-E3
4	117	90-F1+
5	118	90-F2-
6	135	90-PMG
7	136	90-PMG

TB4/CB

1	30	SGR-1
2	3	TB2-5
3	76	LTB2-4B
4	2	TB4/CB-10
5	26	LTB2-3B
9	14	TA2-21
10	2	TB2-57
10	2	TB4/CB-4

REV	DATE	REVISION	BY	MF
A	10-14-92	REVISED PER AS BUILT	CWW	X

W.A. KRAFT

LEEDS
V.A. HOSPITAL

APPROVALS	DATE
DRAWN MRM	8-14-92
CHECKED	
APPROVED PHILIP GULL	8-27-92

KOHLER CO. MF

GENERATOR DIVISION, KOHLER, WI 53044 U.S.A.

THIS DRAWING, IN DESIGN AND DETAIL, IS KOHLER CO. PROPERTY AND MUST NOT BE USED EXCEPT IN CONNECTION WITH KOHLER CO. WORK. ALL RIGHTS OF DESIGN OR INVENTION ARE RESERVED.

TITLE: WIRING DIAGRAM GENERATOR

SCALE: NONE | CAD NO. 263756B.DWG | SHEET 2 OF 2

PLOTTED OCT 14 1992 | DWG. NO. 263756 | C