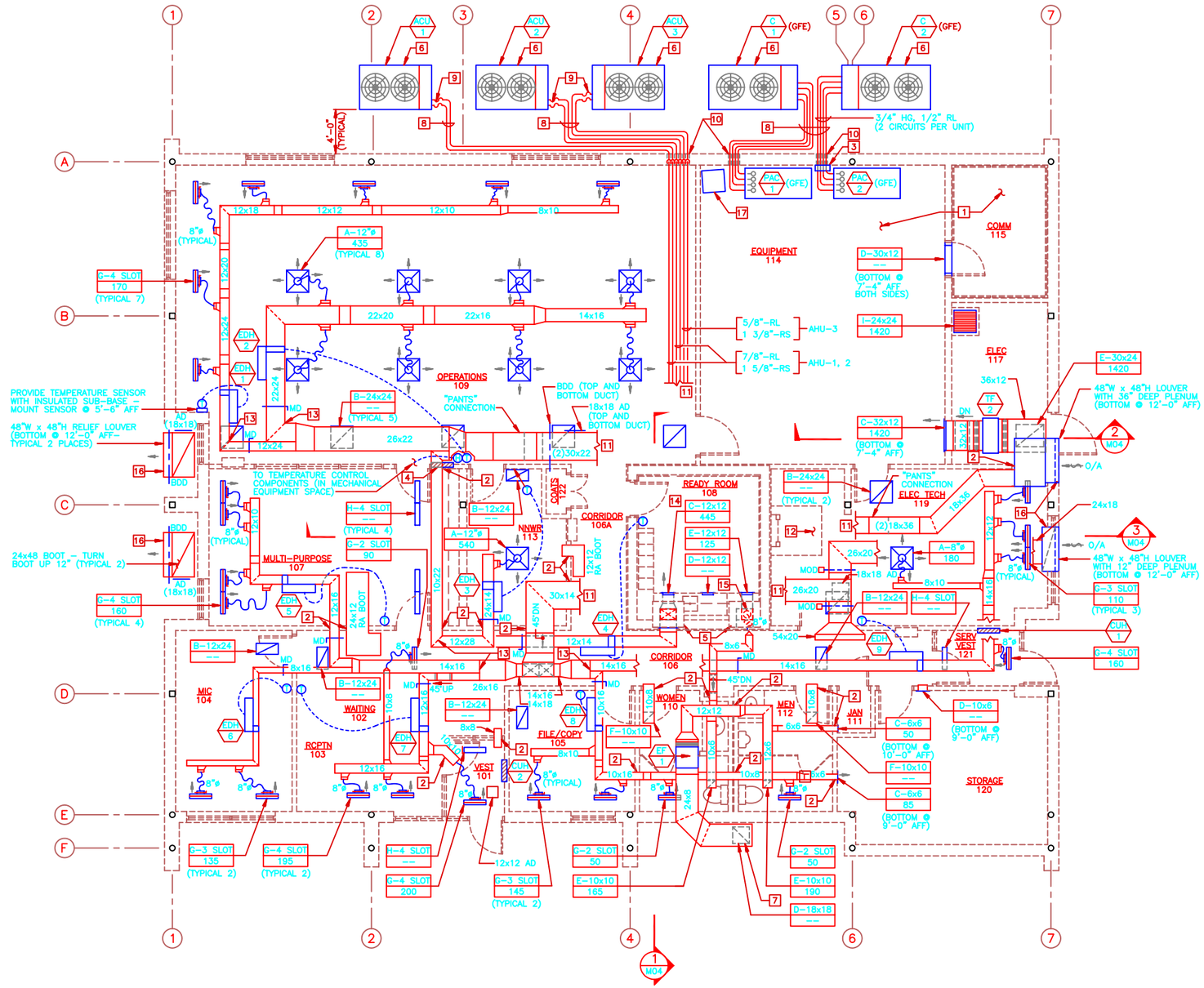

HVAC PLAN

SCALE: 1/4"=1'-0"

GENERAL HVAC NOTES

1. FOR DRAWING LIST AND ABBREVIATIONS, SEE DWG I01.
2. COORDINATE DIFFUSER LOCATIONS IN LAY-IN CEILING WITH THE REFLECTED CEILING PLAN (DWG A06).

NOTES

1. PROVIDE 14 PERFORATED FLOOR PANELS. INSTALL 12 PANELS IN EQUIPMENT ROOM (114), AND 2 PANELS IN COMMUNICATIONS ROOM (115).
2. DUCT PENETRATION THROUGH SOUND WALL TO BE SEALED AIR TIGHT.
3. REMOTE CONTROL BOX (GFE). SEE PAC UNIT DETAIL, DWG M04.
4. ALARM AND INDICATOR LIGHTS PANEL. SEE WALL ELEVATION ON DWG E10.
5. CONCRETE HOODS (SEE DWG S04).
6. ANCHOR CONDENSING UNITS TO SLAB.
7. PROVIDE GRILLE OF ALUMINUM CONSTRUCTION.
8. PROVIDE CHANNELS 8" HIGH WITH TUBING CLIPS WITH RUBBER ISOLATORS FOR REFRIGERANT LINE SUPPORT. SECURE CHANNELS TO SLAB WITH EXPANSION ANCHORS.
9. FLEXIBLE REFRIGERANT PIPE CONNECTION.
10. PROVIDE PIPE SLEEVES WITH MECHANICAL SEAL FOR REFRIGERANT PIPES.
11. FOR CONTINUATION, SEE MECHANICAL EQUIPMENT SPACE PLAN, DWG M04.
12. ACCESS OPENING IN CEILING (SEE DWG A06).
13. DUCTWORK TO BE WRAPPED WITH EXTERNAL INSULATION FROM THE AIR HANDLING UNIT TO THE POINTS INDICATED ON DRAWINGS.
14. BOTTOM OF GRILLES IN SOFFIT TO BE @ 7'-6" AFF (TYPICAL 3 PLACES).
15. CONNECT 8"ø FLEXIBLE DUCT TO 12x12x24 PLENUM BOX IN SOFFIT.
16. SEAL ALL DUCT JOINTS WATERTIGHT.
17. PROVIDE TEMPERATURE CONTROL TERMINAL ON PORTABLE COMPUTER TABLE WITH CASTERS AND AN ADDITIONAL 25FT OF WIRE COILED BELOW ACCESS FLOOR.

NO.	DATE	PREPARED BY	CHECKED BY	FDI APPROVED	ACTR/CORR APPROVED	DESCRIPTION OF REVISION
1	5/12/95	CCT	LLT/DEF	BLR/TLS	FGR/JTS	REVISED PER AS-BUILT CONDITIONS

WFO / NEXRAD PROGRAM
PROJECT NO. GH01

PROGRAM MANAGEMENT SERVICES CONTRACTOR
FLUOR DANIEL
GOULD EVANS ARCHITECTS, P.A.
KANSAS CITY, MO. U.S.A.

DRWN. J. MCDONALD
CHECKED L.THORNTON
SUP'V. ENG. D.FULCHER
ENGR/PRIN. MBR. BLR/TLS
ACCTR./CORR. FGR/JTS

SPECIAL ENGINEERING PROGRAM OFFICE (SEPO)

WEATHER FORECAST OFFICE
MOBILE, ALABAMA

HVAC PLAN

SIZE	DWG. NO.	CLIN.	REV.
044131- 5	M03	GH	1

FDSP0004 05/09/95 14:42 CCT 1/4=1' KGHM031

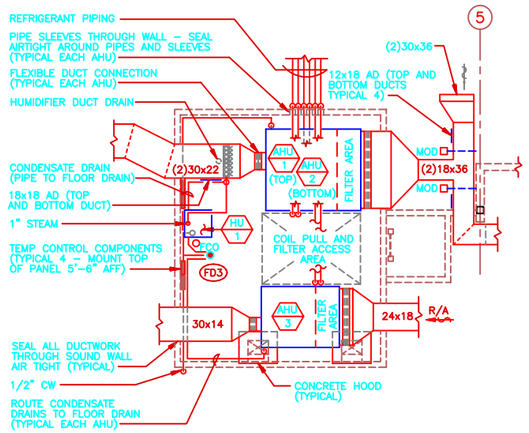

MECHANICAL EQUIPMENT SPACE PLAN
SCALE: 1/4"=1'–0"

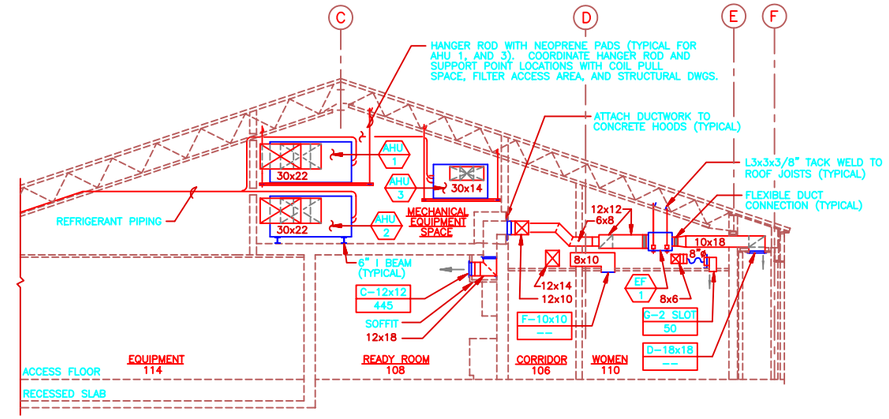

SECTION 1 M03
SCALE: 1/4"=1'–0"

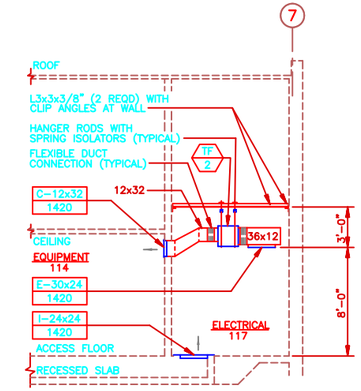

SECTION 2 M03
SCALE: 1/4"=1'–0"

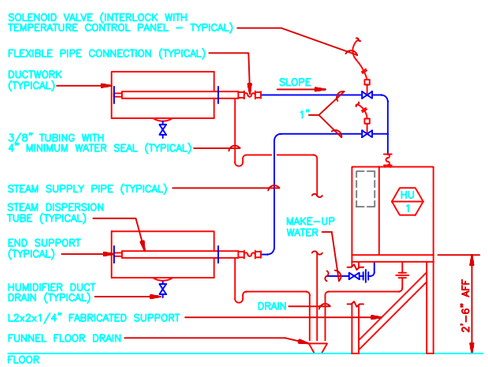

HUMIDIFIER PIPING DETAIL
SCALE: NONE

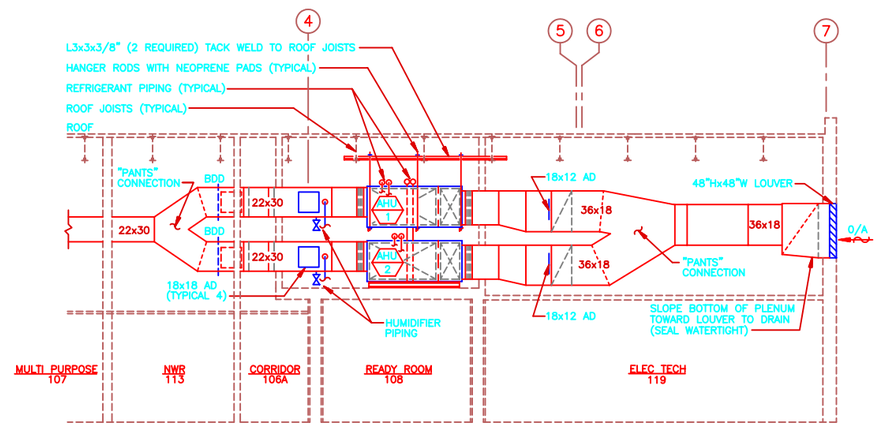

SECTION 3 M03
SCALE: 1/4"=1'–0"

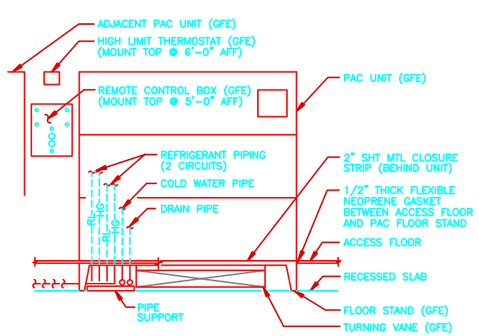

PAC UNIT DETAIL
SCALE: NONE

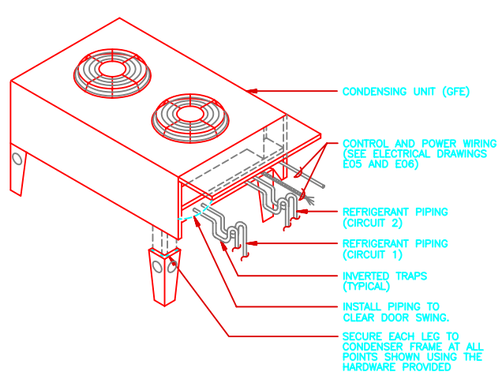

PAC CONDENSING UNIT DETAIL
SCALE: NONE

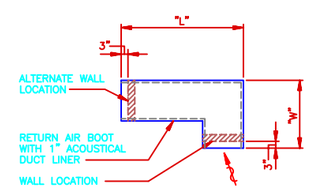

RETURN AIR BOOT SCHEDULE			
RA BOOT SIZE	CFM RANGE	RA BOOT DIMENSIONS	
		"L"	"W"
12x12	0–500	3'–0"	2'–0"
24x12	501–1000	7'–0"	3'–0"
24x24	1001–2000	7'–0"	3'–0"

NOTES:
1. SEE ARCHITECTURAL DRAWINGS FOR SOUND WALL LOCATIONS
2. SEAL WALL PENETRATIONS AIRTIGHT

RA BOOT DETAIL
SCALE: NONE

0 2' 4' 8' 12'
SCALE: 1/4"=1'–0"

NO.	DATE	PREPARED BY	CHECKED BY	APPROVED BY	ACTG/CODE APPROVED	DESCRIPTION OF REVISION
1	5/12/95	CCT	LLT/DEF	BLR/TLS	FGR/JTS	REVISED PER AS–BUILT CONDITIONS

WFO / NEXRAD PROGRAM
PROJECT NO. GH01

DRAWN J. MCDONALD
CHECKED L.THORNTON
SUPV. ENGR. D.FULCHER
ENGR/FIELD MGR. BLR/TLS
ACCTG./CODE FGR/JTS

SPECIAL ENGINEERING PROGRAM OFFICE (SEPO)

WEATHER FORECAST OFFICE
MOBILE, ALABAMA
HVAC SECTIONS AND DETAILS

PROGRAM MANAGEMENT SERVICES CONTRACTOR
FLOOR DANIEL
GOULD EVANS ARCHITECTS, P.A.
KANSAS CITY, MO. U.S.A.

SEPO

044131–	SIZE 5	DWG. NO. M04	CLIN. GH	REV. 1

FDSP0004 05/09/95 14:44 CCT 1/4=1' KCGHM041

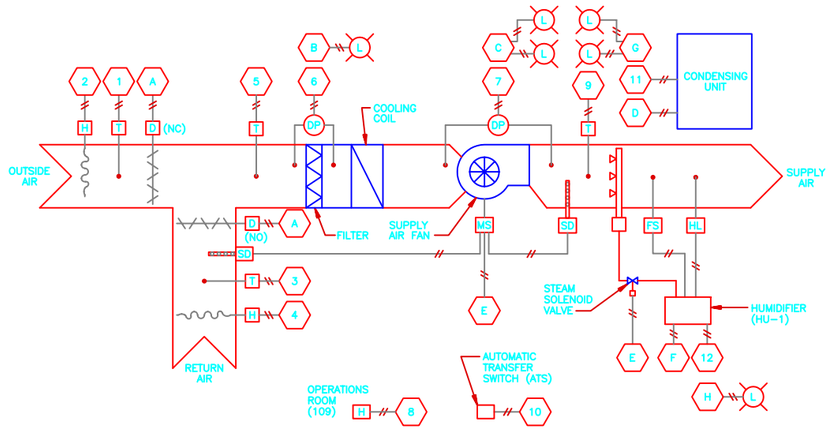

AHU-1, AHU-2 CONTROLS

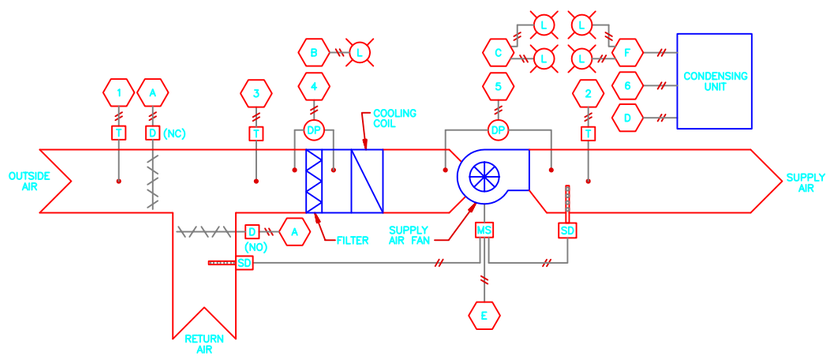

AHU-3 CONTROLS

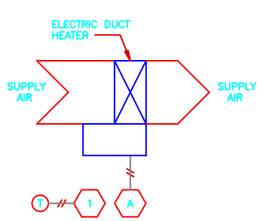

SPACE TEMPERATURE CONTROLS

INPUTS		OUTPUTS	
1	SPACE TEMPERATURE	A	ELECTRIC DUCT HEATER (EDH-1)
.		.	
.		.	
.		.	
9	SPACE TEMPERATURE	I	ELECTRIC DUCT HEATER (EDH-9)

AHU-1, AHU-2 CONTROLS

INPUTS		OUTPUTS	
1	O/A TEMPERATURE	A	O/A, R/A DAMPERS
2	O/A HUMIDITY	B	DIRTY FILTERS
3	R/A TEMPERATURE	C	SUPPLY FAN STATUS
4	R/A HUMIDITY	D	COOLING
5	M/A TEMPERATURE	E	AHU START/STOP
6	FILTER DIFF PRESSURE	F	HUMIDIFIER
7	FAN DIFF PRESSURE	G	CONDENSING UNIT STATUS
8	SPACE HUMIDITY	H	HUMIDIFIER ALARM
9	S/A TEMPERATURE		
10	COMMERCIAL/GENERATOR POWER STATUS		
11	CONDENSING UNIT SAFETIES		
12	HUMIDIFIER STATUS		

AHU-3 CONTROLS

INPUTS		OUTPUTS	
1	O/A TEMPERATURE	A	O/A, R/A DAMPERS
2	S/A TEMPERATURE	B	DIRTY FILTERS
3	M/A TEMPERATURE	C	SUPPLY FAN STATUS
4	FILTER DIFF PRESSURE	D	COOLING
5	FAN DIFF PRESSURE	E	AHU START/STOP
6	CONDENSING UNIT SAFETIES	F	CONDENSING UNIT STATUS

TEMPERATURE CONTROL NOTES

1. THE CONTRACTOR SHALL BE RESPONSIBLE FOR DETAILING THE HVAC CONTROL SYSTEM, POWER WIRING, LOW VOLTAGE CONTROL WIRING, AND CONNECTIONS NECESSARY TO PROVIDE A COMPLETE AND OPERABLE TEMPERATURE AND HUMIDITY CONTROL SYSTEM BASED ON THE SCHEMATIC AND SEQUENCE OF OPERATION AS SHOWN ON THIS DRAWING.
2. THE ALARM AND INDICATION LIGHTS PANEL SHALL BE PROVIDED WITH THE FOLLOWING IDENTIFICATION AND INDICATOR LIGHTS (FOR EACH AHU).

SUPPLY FAN OPERATING	GREEN
SUPPLY FAN FAILURE	RED
CONDENSING UNIT OPERATING	GREEN
CONDENSING UNIT FAILURE	RED
FILTER CHANGE REQUIRED	RED
HUMIDIFIER ALARM	RED

3. ALL 24 VOLT CONTROL WIRING SHALL BE FURNISHED AND INSTALLED BY TEMPERATURE CONTROL CONTRACTOR AND SHALL BE SHIELDED CLASS 2 PLENUM RATED CABLE.
4. ALL 120 VOLT POWER WIRING TO CONTROL PANELS AND MOTOR OPERATED DAMPERS SHALL BE INSTALLED BY THE ELECTRICAL CONTRACTOR (SEE DWG E06).
5. ALL 24 VOLT CONTROL WIRING UNDER THE FLOOR SHALL BE INSTALLED IN CONDUITS BY THE ELECTRICAL CONTRACTOR (SEE DWG E07).
6. SET ROOM TEMPERATURE AT 72°F FOR ALL AREAS SERVED BY AHU-1 AND AHU-2, AND 78°F DURING SUMMER AND 65°F DURING WINTER FOR ALL AREAS SERVED BY AHU-3. SET ROOM HUMIDITY AT 50% RELATIVE HUMIDITY.
7. SET ALTERNATING TIME OF AHU-1 & 2, AND PAC-1 & 2 FOR 84 HOUR INTERVALS.

EQUIPMENT SEQUENCE OF CONTROLS

AIR HANDLING UNIT (AHU-1,2)

AIR HANDLING UNITS 1 & 2 (AHU-1,2) SERVE THE OPERATIONS AREA AND ARE OPERATED ON A 24-HOUR SCHEDULE. ONLY ONE AIR HANDLING UNIT SHALL OPERATE, AND THE NON-OPERATING UNIT SHALL SERVE AS A BACKUP. THE BACK-UP UNIT SHALL BE STARTED AUTOMATICALLY UPON FAILURE OF THE OTHER UNIT. AHU-1 AND 2 SHALL BE PROGRAMMED TO ALTERNATE TO MAINTAIN EQUAL RUN TIME. THE SUPPLY AIR FAN SHALL RUN CONTINUOUSLY. A SUPPLY AIR TEMPERATURE SENSOR SHALL MODULATE THE CONDENSING UNIT (ACU) TO MAINTAIN 55°F DISCHARGE AIR TEMPERATURE. THE SUPPLY AIR TEMPERATURE SHALL BE RESET TO SATISFY THE ROOM TEMPERATURE SENSOR WITH THE MAXIMUM COOLING DEMAND. AN OUTSIDE AIR ECONOMIZER CYCLE SHALL BE PROVIDED WITH ENTHALPY CONTROL. A MIXED AIR TEMPERATURE SENSOR SHALL MODULATE THE OUTSIDE AND RETURN AIR DAMPERS DURING THE ECONOMIZER CYCLE. MINIMUM OUTSIDE AIR SHALL BE PROVIDED WHEN THE UNIT IS NOT IN THE ECONOMIZER CYCLE. HUMIDITY SHALL BE CONTROLLED BY A SPACE HUMIDITY SENSOR. HEATING WILL BE PROVIDED BY INDIVIDUAL ELECTRIC DUCT HEATERS (EDH). SMOKE DETECTORS, IN THE SUPPLY AND RETURN AIR DUCTWORK, SHALL DE-ENERGIZE THE SUPPLY AIR FAN UPON SENSING SMOKE. UPON LOSS OF COMMERCIAL POWER, THE AIR HANDLING UNIT SHALL BE PROGRAMMED FOR A TIMED DELAY RESTART. ELECTRIC DUCT HEATER EDH-2 SHALL NOT OPERATE ON EMERGENCY POWER.

AIR HANDLING UNIT (AHU-3)

AIR HANDLING UNIT 3 (AHU-3) SERVES THE ADMINISTRATION AREA AND OPERATES ON AN 8-HOUR SCHEDULE. PROGRAM NIGHT SETBACK. THE OPERATION OF AHU-3 IS SIMILAR TO AHU-1 AND 2 WITH THE FOLLOWING EXCEPTIONS:
(1) OUTSIDE AIR ECONOMIZER CYCLE IS CONTROLLED BY OUTSIDE AIR TEMPERATURE; AND
(2) NO HUMIDITY CONTROL.
AHU-3, ACU-3 AND ASSOCIATED ELECTRIC DUCT HEATERS SHALL NOT OPERATE ON EMERGENCY POWER. UPON RESTORATION OF COMMERCIAL POWER, AHU-3, ACU-3 AND ASSOCIATED ELECTRIC DUCT HEATERS SHALL RETURN TO NORMAL OPERATING MODE. THE AIR HANDLING UNIT SHALL BE PROGRAMMED FOR A TIMED DELAY RESTART.

ELECTRIC DUCT HEATERS (EDH)

A SPACE TEMPERATURE SENSOR SHALL MODULATE THE ELECTRIC DUCT HEATER WHEN HEATING IS REQUIRED.

PACKAGED AIR CONDITIONING UNITS (PAC-1,2)

THE PAC UNITS (PAC-1,2), CONDENSING UNITS (C-1,2) AND THE REMOTE CONTROL BOX (RCB) ARE GOVERNMENT FURNISHED EQUIPMENT. BOTH PAC UNITS HAVE INTERNAL CONTROLS AND ARE CONNECTED TO THE RCB. THE RCB CONTROLS THE LEAD/LAG SEQUENCING OF THE UNITS TO MAINTAIN EQUAL RUN TIME. A HIGH TEMPERATURE THERMOSTAT IS ALSO CONNECTED TO THE RCB, TO ENERGIZE THE LAG PAC UNIT ON A HIGH SPACE TEMPERATURE SIGNAL. BOTH PAC UNITS WILL BE ABLE TO RUN IN THE NORMAL OPERATION MODE. UPON A SIGNAL FROM THE AUTOMATIC TRANSFER SWITCH (ATS), THE RCB WILL ALLOW ONLY ONE PAC UNIT TO RUN IN THE EMERGENCY OPERATION MODE.

EXHAUST FAN (EF-1)

THE EXHAUST FAN SHALL RUN CONTINUOUSLY.

TRANSFER FAN (TF-2)

THE TRANSFER FAN SHALL RUN CONTINUOUSLY.

HUMIDIFIER (HU-1)

THE HUMIDIFIER SHALL NOT BE ALLOWED TO OPERATE UNLESS THE AIR HANDLING UNIT SUPPLY AIR FAN IS IN OPERATION. AN AIR FLOW SWITCH SHALL DE-ENERGIZE THE HUMIDIFIER UPON LOSS OF AIRFLOW. THE STEAM SOLENOID VALVES SHALL BE INTERLOCKED TO OPEN WHEN THE CORRESPONDING AIR HANDLING UNIT IS IN OPERATION. THE SPACE HUMIDITY SENSOR SHALL MODULATE THE HUMIDIFIER. WHEN THE HUMIDIFIER IS ENERGIZED, THE SUPPLY AIR TEMPERATURE SHALL BE RESET TO 65°F. WHEN THE HUMIDIFIER IS DE-ENERGIZED, SUPPLY AIR TEMPERATURE SHALL BE SET BACK TO 55°F. A SIGNAL FROM THE HIGH-LIMIT HUMIDITY SENSOR SHALL DE-ENERGIZE THE HUMIDIFIER.

CABINET UNIT HEATERS (CUH-1,2)

THE CABINET UNIT HEATERS HAVE SELF CONTAINED CONTROLS. THE THERMOSTATS SHALL BE SET TO MAINTAIN A SPACE TEMPERATURE OF 65°F.

TEMPERATURE CONTROL LEGEND

- T — DUCT TEMPERATURE SENSOR
- PS — AIRFLOW SWITCH
- DP — DIFFERENTIAL PRESSURE SWITCH
- SD — DUCT SMOKE DETECTOR
- HL — HUMIDITY HIGH LIMIT SENSOR
- H — DUCT HUMIDITY SENSOR
- D — MOTOR OPERATED DAMPER (NC – NORMALLY CLOSED) (NO – NORMALLY OPEN)
- L — INDICATOR LIGHT (LOCATED IN ALARM/INDICATION LIGHTS PANEL)
- T — ROOM TEMPERATURE SENSOR
- H — ROOM HUMIDITY SENSOR
- MS — MOTOR STARTER
- TEMPERATURE CONTROL PANEL INPUT OR OUTPUT
- CONTROL WIRING

NO.	DATE	PREPARED BY	CHECKED BY	RIV APPROVED	ACOE/CODE APPROVED	DESCRIPTION OF REVISION
1	5/12/95	CCT	LLT/DEF	BLR/TLS	FGR/JTS	REVISED PER AS-BUILT CONDITIONS

WFO / NEXRAD PROGRAM
PROJECT NO. GH01

PROGRAM MANAGEMENT SERVICES CONTRACTOR
FLOOR DANIEL
GOULD EVANS ARCHITECTS, P.A.
KANSAS CITY, MO.
U.S.A.

DRAWN: R. L. ANDREWS
CHECKED: L.THORNTON
SUPV. ENGR.: D.FULCHER
ENGR/PROJ. MGR.: BLR/TLS
ACOE/CODE: FGR/JTS

SPECIAL ENGINEERING PROGRAM OFFICE (SEPO)

WEATHER FORECAST OFFICE
MOBILE, ALABAMA
HVAC
TEMPERATURE CONTROLS

044131-	SIZE 5	DWG. NO. M05	CLIN. GH	REV. 1

FDSP0004 05/09/95 13:05 CCT 12/1=1" KCDIM051

AIR HANDLING UNIT SCHEDULE

EQUIP NO	DESCRIPTION	SUPPLY AIR FAN								REFRIGERANT COOLING COIL						FILTERS			ACCESSORIES	REMARKS
		FAN TYPE	TOTAL AIR (CFM)	OUTSIDE AIR (CFM)	TSP (IN WG)	ESP (IN WG)	FAN RPM	FAN HP	POWER	TOTAL CAPACITY (BTU/HR)	SENSIBLE CAPACITY (BTU/HR)	E A T DB (°F)	E A T WB (°F)	STATIC PRESS DROP (IN WG)	ROWS & FINS/IN	TYPE	SP (IN WG) CLEAN	SP (IN WG) DIRTY		
AHU 1	HORIZONTAL DRAW THROUGH	FORWARD CURVED	5,655	680	2.25	.90	1080	5.0	460V/3PH	161,300	131,700	76.3	63.1	.65	6/8	2"–1% PLEATED FILTER	.35	.70	VI	SOUND POWER LEVEL SHALL BE LESS THAN 86dB IN THE 125Hz OCTAVE BAND.
AHU 2	HORIZONTAL DRAW THROUGH	FORWARD CURVED	5,655	680	2.25	.90	1080	5.0	460V/3PH	161,300	131,700	76.3	63.1	.65	6/8	2"–1% PLEATED FILTER	.35	.70	VI	SOUND POWER LEVEL SHALL BE LESS THAN 86dB IN THE 125Hz OCTAVE BAND.
AHU 3	HORIZONTAL DRAW THROUGH	FORWARD CURVED	2,735	400	2.40	.90	1270	3.0	460V/3PH	93,500	74,400	82.2	67.6	.80	6/8	2"–1% PLEATED FILTER	.35	.70	VI	SOUND POWER LEVEL SHALL BE LESS THAN 86dB IN THE 125Hz OCTAVE BAND.

NOTE: PARTICULATE FILTERS RATED AT 0.3 MICRONS IN ACCORDANCE WITH ASHRAE STANDARD 62–89.

AIR COOLED CONDENSING UNIT SCHEDULE

EQUIP NO	NO OF FANS	AMBIENT TEMP (°F)	POWER	FULL LOAD AMPS	MINIMUM CIRCUIT AMPS	ACCESSORIES	REMARKS
ACU 1	2	115	460V/3PH	38.3	46.8	--	
ACU 2	2	115	460V/3PH	38.3	46.8	--	
ACU 3	2	115	460V/3PH	24.2	29.1	--	

GOVERNMENT FURNISHED PACKAGED AIR CONDITIONING UNIT SCHEDULE

EQUIP NO	SUPPLY FAN			COOLING COIL				ELECTRIC REHEAT COIL (kW)	HUMIDIFIER		ELECTRICAL			ACCESSORIES	REMARKS
	AIRFLOW (CFM)	FAN HP	ESP (IN WG)	TOTAL CAPACITY (BTU/HR)	SENSIBLE CAPACITY (BTU/HR)	E A T DB (°F)	E A T (% RH)		CAPACITY (LBS/HR)	ELECTRICAL CAPACITY (kW)	POWER	FULL LOAD AMPS	MINIMUM CIRCUIT AMPS		
PAC 1	5,650	2.0	0.50	120,100	109,500	72.0	50	15.0	11.0	3.6	460V/3PH	33.2	40.7	DDS, FS, HD	DOWNFLOW, NOMINAL 10 TON
PAC 2	5,650	2.0	0.50	120,100	109,500	72.0	50	15.0	11.0	3.6	460V/3PH	33.2	40.7	DDS, FS, HD	DOWNFLOW, NOMINAL 10 TON

NOTE: ALL UNITS HAVE 4"–30% PRE–FILTERS.

CABINET UNIT HEATER SCHEDULE

EQUIP NO	AIRFLOW (CFM)	HEATING (kW)	ACCESSORIES	POWER	REMARKS
CUH 1	100	4.0	DS, T, MS	277V/1PH	SET THERMOSTAT AT 65°F
CUH 2	100	4.0	DS, T, MS	277V/1PH	SET THERMOSTAT AT 65°F

NOTE: SEE ARCHITECTURAL DWGS FOR EXACT MOUNTING HEIGHTS AND LOCATIONS.

GOVERNMENT FURNISHED AIR COOLED CONDENSING UNIT SCHEDULE

EQUIP NO	NUMBER OF FANS	AMBIENT TEMP (°F)	ELECTRICAL			ACCESSORIES	REMARKS
			POWER	FULL LOAD AMPS	MINIMUM CIRCUIT AMPS		
C 1	2	105	460V/3PH	4.4	5.0	FSC, DS	
C 2	2	105	460V/3PH	4.4	5.0	FSC, DS	

DIFFUSER SCHEDULE

SYMBOL	DIFFUSER TYPE	FACE TYPE	FACE SIZE	REMARKS
A	CEILING SUPPLY	LOUVERED	12x12 or 24x24	
B	CEILING RETURN	PERFORATED	12x24 or 24x24	
C	SIDEWALL SUPPLY	DOUBLE DEFLECTION	SEE PLANS	
D	SIDEWALL RETURN	FIXED LOUVER	SEE PLANS	PROVIDE ALUMINUM CONSTRUCTION ON ALL EXTERIOR GRILLES AS INDICATED ON PLANS.
E	SIDEWALL/CEILING EXHAUST	FIXED LOUVER	SEE PLANS	
F	TRANSFER GRILLE	FIXED LOUVER	SEE PLANS	PROVIDE GRILLE WITH TRANSFER BOOT AND 1" ACOUSTICAL DUCT LINING.
G	CEILING SLOT SUPPLY	LINEAR	2'–0" LONG	SEE FLOOR PLAN FOR NUMBER OF 3/4" SLOTS.
H	CEILING SLOT RETURN	LINEAR	2'–0" LONG	SEE FLOOR PLAN FOR NUMBER OF 3/4" SLOTS.
I	FLOOR GRILLE	FIXED BAR	SEE PLANS	

NOTE: SEE ARCHITECTURAL REFLECTED CEILING PLAN FOR EXACT DIFFUSER LOCATIONS AND CEILING TYPES.

ELECTRIC DUCT HEATER SCHEDULE

EQUIP NO	HEATING CAPACITY (kW)	AIRFLOW (CFM)	E A T DB(°F)	SP (IN WG)	POWER	STEPS	ACCESSORIES	REMARKS
EDH 1	17.5	1190	55.0	0.05	460V/3PH	2	FS, DS	
EDH 2	50.0	3480	55.0	0.05	460V/3PH	3	FS, DS	
EDH 3	8.0	540	55.0	0.05	460V/3PH	2	FS, DS	
EDH 4	7.0	445	55.0	0.05	460V/3PH	2	FS, DS	
EDH 5	10.0	640	55.0	0.05	460V/3PH	2	FS, DS	
EDH 6	4.0	270	55.0	0.05	277V/1PH	2	FS, DS	
EDH 7	10.0	680	55.0	0.05	460V/3PH	2	FS, DS	
EDH 8	7.0	475	55.0	0.05	460V/3PH	2	FS, DS	
EDH 9	10.0	670	55.0	0.05	460V/3PH	2	FS, DS	

NOTE: MAINTAIN 3'–0" CLEARANCE IN FRONT OF ELECTRICAL CONTROL PANEL.

FAN SCHEDULE

EQUIP NO	FAN TYPE	DRIVE TYPE	AIRFLOW (CFM)	TOTAL STATIC PRESS (IN/WG)	MAXIMUM FAN HP	POWER	ACCESSORIES	REMARKS
EF 1	INLINE CENTRIFUGAL	DIRECT	530	0.50"	1/6	120V/1PH	BDD, VI, ESC, DS	4.0 SONES
EF 2	INLINE CENTRIFUGAL	DIRECT	1420	.375"	1/2	120V/1PH	VI, ESC, DS	6.0 SONES

HUMIDIFIER SCHEDULE

EQUIP NO	DESIGN CAP (LBS/HR STEAM)	ELECTRICAL	kW	ACCESSORIES	REMARKS
HU 1	48.0	460V/3PH	16.6	FS, HL	20.0 NOMINAL AMPS

HVAC ABBREVIATIONS

ACU	AIR COOLED CONDENSING UNIT
AD	ACCESS DOOR
AFF	ABOVE FINISHED FLOOR
AHU	AIR HANDLING UNIT
BDD	BACKDRAFT DAMPER
C	CONDENSER
CUH	CABINET UNIT HEATER
DDS	DOOR INTERLOCKED DISCONNECT SWITCH
DS	DISCONNECT SWITCH
EDH	ELECTRIC DUCT HEATERS
EF	EXHAUST FAN
ESC	ELECTRONIC SPEED CONTROL
FM	OPTIONAL FAN MOTOR
FS	FLOOR STAND, FLOW SWITCH
FSC	FAN SPEED CONTROL (–20° AMBIENT)
FTU	FAN TERMINAL UNIT
GFE	GOVERNMENT FURNISHED EQUIPMENT
HD	HEAT DETECTOR
HEM	HIGH EFFICIENCY MOTORS
HU	HUMIDIFIER
IGV	INLET GUIDE VANES
MS	2" DEEP SEMI–RECESSED MOUNTING SLEEVE
PAC	PACKAGED AIR CONDITIONING UNIT
T	INTEGRAL THERMOSTAT
TF	TRANSFER FAN
VAV	VARIABLE AIR VOLUME UNIT
VI	VIBRATION ISOLATORS

HVAC LEGEND

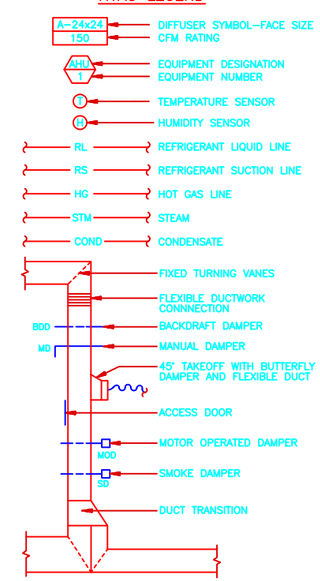

NO.	DATE	PREPARED BY	CHECKED BY	FOR APPROVAL	ACTR/CCTR APPROVAL	DESCRIPTION OF REVISION
1	5/12/95	CCT	LLT/DEF	BLR/TLS	FGR/JTS	REVISED PER AS–BUILT CONDITIONS

WFO / NEXRAD PROGRAM
PROJECT NO. GH01

PROGRAM MANAGEMENT SERVICES CONTRACTOR
FLUOR DANIEL
GOULD EVANS ARCHITECTS, P.A.
KANSAS CITY, MO. U.S.A.

DRAWN: J. MCDONALD
CHECKED: L. THORNTON
SUP'V. ENGR.: D. FULCHER
ENGR./PROJ. MGR.: BLR/TLS
ACCTR./CCTR.: FGR/JTS

SPECIAL ENGINEERING PROGRAM OFFICE (SEPO)

WEATHER FORECAST OFFICE
MOBILE, ALABAMA

HVAC SYMBOLS, SCHEDULES AND LEGEND

SIZE	DWG. NO.	CLIN.	REV.
5	044131– M06	GH	1

FDSP0004 05/09/95 13:05 CCT 12/1=1" KCGH4061