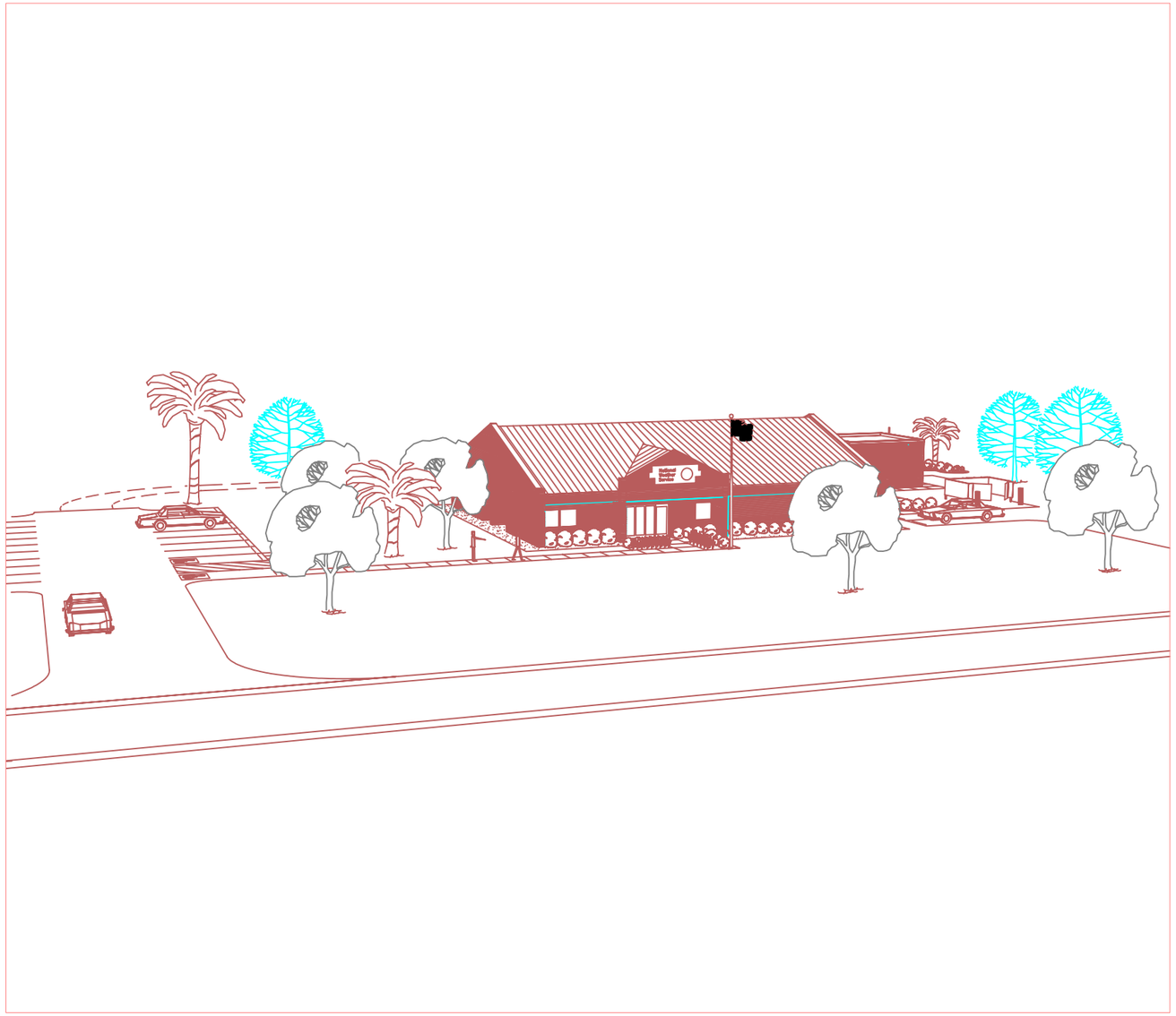

WEATHER FORECAST OFFICE

NOAA/
NATIONAL WEATHER SERVICE

FDI CONTRACT NO. 044131

MOBILE, ALABAMA

AS-BUILT SUBMITTAL
12 MAY 1995
DRAWING NO. SKA01 REV. 1
PROJECT NO. GH01

FLUOR DANIEL
KANSAS CITY, MISSOURI U.S.A.

GOULD EVANS
ARCHITECTS, P.A.

05/09/95 07:47 OCT 1=20' GHSKA011

ABBREVIATIONS

A	ACOUSTIC	F	FAHRENHEIT/FEEDER	N	NEUTRAL/NORTH/NORMAL	T	TELEPHONE/TREAD/
@	AT	FAO	FINISH ALL OVER	N/A	NOT APPLICABLE		INTEGRAL THERMOSTAT
AB	ANCHOR BOLT	FB	FACE BRICK	NAT	NATURAL	TB	TERMINAL BLOCK
ABV	ABOVE	FC	FOOT CANDLE	NC	NO CEILING	TBR	TO BE REMOVED
AC	ALTERNATING CURRENT	FCO	FLOOR CLEANOUT	NC	NORMALLY CLOSED	T & G	TONGUE AND GROOVE
AC	ASPHALTIC CONCRETE	FD	FIRE DAMPER/FLOOR DRAIN	NEC	NATIONAL ELECTRICAL CODE	TCB	TOP OF CATCH BASIN
ACU	AIR COOLED CONDENSING UNIT	FDN	FOUNDATION	NEMA	NATIONAL ELECTRICAL	TECH	TECHNICAL, TECHNICIAN
ACI	AMERICAN CONCRETE INSTITUTE	FE	FIRE EXTINGUISHER		MANUFACTURERS ASSOCIATION	TEL	TELEPHONE
ACST	ACOUSTICAL	FEC	FIRE EXTINGUISHER CABINET	NEXRAD	NEXT GENERATION RADAR	TEMP	TEMPERATURE
ACT	ACOUSTICAL CEILING TILE	FEMA	FEDERAL EMERGENCY	NFPA	NATIONAL FIRE PROTECTION	TERM	TERMINAL
A/C	AIR CONDITIONING		MANAGEMENT AGENCY		ASSOCIATION	TF	TRANSFER FAN
AD	ACCESS DOOR	FG	FINISH GRADE	NFWH	NON-FREEZE WALL HYDRANT	THK	THICK
ADJ	ADJUSTABLE	FH	FIRE HYDRANT	NIC	NOT IN CONTRACT	TKBD	TACK BOARD
ADJT	ADJACENT	FIN	FINISH	NL	NAILABLE	TO	TOP OF
AF	AMP FRAME	FL	FLOOR	NO	NORMALLY OPEN	TOB	TOP OF BOLT
AFF	ABOVE FINISH FLOOR	FLA	FULL LOAD AMPS	NO OR #	NUMBER	TOC	TOP OF CONCRETE/CURB
AFDS	AUTOMATIC FIELD	FLEX	FLEXIBLE	NOM	NOMINAL	TOM	TOP OF MASONRY
	OPERATIONS AND SERVICES	FLR	FLOORING	NPW	NON POTABLE WATER	TOP	TOP OF PAVEMENT
AHU	AIR HANDLING UNIT	FLUOR	FLUORESCENT	NTS	NOT TO SCALE	TOS	TOP OF STEEL
AIA	AMERICAN INSTITUTE	FM	FREQUENCY MAIN/	NWR	NATIONAL WEATHER RADIO	TOW	TOP OF WALL
	OF ARCHITECTS		OPTIONAL FAN MOTOR	NWS	NATIONAL WEATHER SERVICE	TRANSF	TRANSFER
AIC	AMPERES INTERRUPT CURRENT	FOC	FACE OF CONCRETE			TRANSL	TRANSLUCENT
AISC	AMERICAN INSTITUTE OF	FOF	FACE OF FINISH			TRANSP	TRANSPARENT
	STEEL CONSTRUCTION	FOM	FACE OF MASONRY	O TO O	OUT TO OUT	TS	TUBULAR STEEL/TERMINAL STRIP
ALT	ALTERNATE	FOS	FACE OF STUD	OA	OUTSIDE AIR/OVERALL	TV	TELEVISION
ALUM	ALUMINUM	FR	FIRE RESISTIVE/FRAME	OBD	OPPOSED BLADE DAMPER	TWR	TOWER
AMP, A	AMPERE	FRTW	FIRE RETARDANT TREATED WOOD	OC	ON CENTER	TYP	TYPICAL
ANOD	ANODIZED	FS	FINISH SURFACE	OD	OUTSIDE DIAMETER		
ANSI	AMERICAN NATIONAL	FSC	FAN SPEED CONTROL	OF	OUTSIDE FACE		
	STANDARDS INSTITUTE			OFC	OFFICE	U	UTILITY
AP	ACCESS PANEL	FT OR '	FEET	OH	OPPOSITE HAND/OVERHEAD	UBC	UNIFORM BUILDING CODE
APD	AIR PRESSURE DROP	FTG	FOOTING	OHP	OVERHEAD POWER	UCP	UNIT CONTROL POSITION
APPROX	APPROXIMATE	FTU	FAN TERMINAL UNIT	OJ	OPEN-WEB JOIST	UG	UNDERGROUND
ARCH	ARCHITECTURE(URAL)	F TO F	FACE TO FACE	OPER	OPERATOR/OPERATIONS	UL	UNDERWRITERS LABORATORIES
AS	AMP SWITCH			OPNG	OPENING	UNO/UON	UNLESS NOTED OTHERWISE/
ASA	AMERICAN STANDARDS			OPP	OPPOSITE		UNLESS OTHERWISE NOTED
	ASSOCIATION, INC.	G	GAS/GUST RESPONSE FACTOR	OR	OUTRIGGER	UPS	UNINTERRUPTIBLE POWER SUPPLY
ASHRAE	AMERICAN SOCIETY OF	GA	GAUGE/GAGE	OZ	OUNCE	UR	URINAL
	HEATING, REFRIGERATION AND	GAL	GALLON				
	AIR CONDITIONING ENGINEERS	GALV	GALVANIZED				
AT	AMP TRIP	GB	GRAB BAR	P	POLE	VA	VENT/VOLT(AGE)
ATS	AUTOMATIC TRANSFER SWITCH	GEN/G	GENERAL/GENERATOR	PAC	PACKAGED AIR CONDITIONING UNIT	VA	VOLT AMPERE
AUTO	AUTOMATIC	GFDP	GENERATOR DISCLOSURE PANEL	PART BD	PARTICLE BOARD	VAC	VOLTS ALTERNATING CURRENT
AWG	AMERICAN WIRE GAUGE	GFCI	GROUND FAULT CIRCUIT INTERRUPT	PAS	PASSAGE	VAR	VARIABLE
AWIPS	ADVANCE WEATHER INTERACTIVE	GFE	GOVERNMENT FURNISHED EQUIPMENT	PAV	PAVE(ING)/MENT)(ER)	VAV	VARIABLE AIR VOLUME
	PROCESSING SYSTEM	GFM	GOVERNMENT FURNISHED MATERIAL	PB	PULL BOX/PUSH BUTTON	VCP	VITRIFIED CLAY PIPE
AWS	AMERICAN WELDING SOCIETY	GI	GALVANIZED IRON	PBX	PRIVATE BRANCH EXCHANGE	VCT	VINYL COMPOSITION TILE
		GL	GLASS	PC	PORTLAND CEMENT	VERT	VERTICAL
B	BARE	GND/G	GROUND	PC	PULL CHAIN/PHOTOCELL	VEST	VESTIBULE
BATT	BATTERY	GOVT	GOVERNMENT	PD	PRESSURE DROP	VI	VIBRATION ISOLATORS
BC	BEGINNING OF CURVE	GP	GRINDER PUMP	PERP	PERPENDICULAR	VIN	VINYL
BD	BOARD	GVL	GRAVEL	PH OR #	PHASE	VOL	VOLUME
BDD	BACKDRAFT DAMPER	GYP	GYPSUM	PI	POINT OF INTERSECTION	VP	VAPOR RETARDER
BEJ	BRICK EXPANSION JOINT			PK	PARK	VT	VINYL TILE
BITUM	BITUMINOUS	H	HIGH	PKG	PARKING	VTR	VENT THRU ROOF
BKR	BREAKER	HB	HOSE BIB	PL	PLATE/PROPERTY LINE	VWC	VINYL WALL COVERING
BLDG	BUILDING	HC	HOLLOW CORE	PLAS	PLASTER		
BLK	BLOCK	HD	HEAD/HEAVY DUTY/	PLBG	PLUMBING	W	WASTE/WATER/WHITE
BLKG	BLOCKING		HEAT DETECTOR	PLCS	PLACES	WB	WET BULB
BM	BENCH MARK	HDBD	HARDBOARD	PLF	POUNDS PER LINEAR FOOT	W	WATT/WIRE
BO	BOTTOM OF	HDW	HARDWARE	PLYWD	PLYWOOD	W	WIDE FLANGE SHAPE STEEL BEAM
BOCA	BUILDING OFFICIALS AND CODE	HDWD	HARDWOOD	P LAM	PLASTIC LAMINATE	W	WEST/MILE/WIDTH
	ADMINISTRATORS INTERNATIONAL, INC.	HEM	HIGH EFFICIENCY MOTORS	PNEU	PNEUMATIC	W/	WITH
BP	BASE PLATE	HG	HOT GAS LINE	PNL	PANEL	W/IN	WITHIN
BRG	BEARING	HH	HINGED HOOD	POB	POINT OF BEGINNING	W/O	WITHOUT
BTM	BOTTOM	HIC	HYDROLOGIST IN CHARGE	POC	POLISHED	WBRT	WEATHER BUREAU RADIO THEODOLITE
BTU	BRITISH THERMAL UNIT	HM	HOLLOW METAL(STEEL, U N O)	PORC	PORCELAIN	WC	WATER CLOSET
BTWN	BETWEEN	HOR	HORIZONTAL	PP	PERFORATED PANEL	WCO	WALL CLEANOUT
BU/BUR	BUILT UP/BUILT UP ROOF	HP	HIGH PRESSURE	PP	POWER PANEL	WD	WOOD
		HP	HORSEPOWER	PR	PAIR	WDW	WINDOW
C	CONDENSER/CONDUIT/CONDUCTOR	HPF	HIGH POWER FACTOR	PRD	POURED	WFO	WEATHER FORECAST OFFICE
CAB	CABINET	HPS	HIGH PRESSURE SODIUM	PRESS	PRESSURE	WH	WEEP HOLE
CAP	CAPACITY	HR	HOUR	PROJ	PROJECTION	WKSTA	WORKSTATION
CB	CATCH BASIN	HS	HIGH STRENGTH	PRV	PRESSURE REDUCING VALVE	WP	WEATHERPROOF/WORK POINT/WELL PUMP
CER	CERAMIC	HT	HEIGHT	PSF	POUNDS PER SQUARE FOOT	WS	WATER STOP
CFM	CUBIC FEET PER MINUTE	HTG	HEATING	PSI	POUNDS PER SQUARE INCH	WT	WEIGHT
CHAM	CHAMFER	HTR	HEATER	PT	PAINT/PLATE TRUSS	WTR	WATER
CI	CAST IRON	HU	HUMIDIFIER	PTC	PHOTO TEMPERATURE CONTROL	WWF	WELDED WIRE FABRIC
CIP	CAST IRON PIPE	HVAC	HEATING, VENTILATING,	PTD	PAINTED		
CJ	CONTROL JOINT		AND AIR CONDITIONING	PTPV	PRESSURE AND TEMPERATURE		
CKT	CIRCUIT	HW	HOT WATER		RELIEF VALVE		
CL	CENTER LINE	HZ	HERTZ	PUP	PRINCIPAL USER PROCESSOR	XFMR	TRANSFORMER
CLG	CEILING	H PT	HIGH POINT	PURP	PURPOSE		
CLKG	CAULKING			PVC	POLYVINYL CHLORIDE		
CLOS	CLOSET	ID	INSIDE DIAMETER	PVT	PRIVATE	YD	YARD
CLR	CLEAR	IE	INVERT ELEVATION	PWR	POWER	YR	YEAR
CMU	CONCRETE MASONRY UNIT	IES	ILLUMINATING ENGINEERING	%	PERCENT		
CNTR	COUNTER		SOCIETY				
CO	CLEAN OUT/COMPANY	IF	INSIDE FACE	QT	QUARRY TILE		
COE	CORP OF ENGINEERS	IGV	INLET GUIDE VANES				
COL	COLUMN	IN OR "	INCH	R	RADIUS/RISER		
COMM	COMMERCIAL/COMMUNICATIONS	INCL	INCLUDE(D)(ING)	RA	RETURN AIR		
COMP	COMPOSITION	INFO	INFORMATION	RCB	REMOTE CONTROL BOX		
CONC	CONCRETE	INSUL	INSULATION/INSULATED	RCP	REINFORCED CONCRETE PIPE		
CONST	CONSTRUCTION	INT	INTERIOR	RCPT	RECEPTACLE		
CONT	CONTINUOUS/CONTROL	INV	INVERT	RCPTN	RECEPTION		
CONTR	CONTRACTOR	IP	IRON PIPE	RD	ROAD/ROOF DRAIN		
CORR	CORRIDOR	IS	INSECT SCREEN	RDA	RADAR DATA ACQUISITION		
Cp	EXTERNAL PRESSURE COEFFICIENT			RE BAR	REINFORCING BAR		
CPI	INTERNAL PRESSURE COEFFICIENT			REF OR RE	REFERENCE(D)		
CPT	CARPET	JAN	JANITOR	REFL	REFLECTED(IVE)(OR)		
CPT T	CARPET TILE	JB/J	JUNCTION BOX	REFR	REFRIGERATOR		
CR	CONTROL RELAY	JST	JOIST	REINF	REINFORCE(MENT)(ED)		
CSI	CONSTRUCTION SPECIFICATIONS	JT	JOINT	REQD	REQUIRED		
	INSTITUTE	JUNCT	JUNCTION	RES	RESILIENT		
CT	CERAMIC TILE			RET	RETAIN(ING)		
CTR	CENTER, CENTRAL			REV	REVISIONS		
CU	COPPER	K	KELVIN/KIP	RFC	RIVER FORCAST CENTER		
CU FT	CUBIC FEET	KCMIL	THOUSAND CIRCULAR MILS	RFG	ROOFING		
CU YD	CUBIC YARD	KO	KNOCK OUT	RG	ROUGH GRADE		
CUH	CABINET UNIT HEATER	KS	KITCHEN SINK	RGS	RIGID GALVANIZED STEEL		
CW	COLD WATER	KVA	KILOVOLT AMPERE	RHR	RIGHT HAND/ROOF HOOD		
C TO C	CENTER TO CENTER	KW	KILOWATT	RHR	RIGHT HAND REVERSE		
[_]	CHANNEL			RJ	RAKE JOINT		
		L	STEEL ANGLE	RL	REFRIGERANT LIQUID LINE		
D	DRAIN	LA	SURGE AND LIGHTNING ARRESTER	RLA	RUNNING LOAD AMP		
D	PENNY (AS 10D NAIL)	LAM	LAMINATE(D)	RM	ROOM		
DB	DECIBEL/DRY BULB	LAN	LOCAL AREA NETWORK	RND OR #	ROUND		
DBL	DOUBLE	LAT	LEAVING AIR TEMPERATURE	RO	ROUGH OPENING		
DC	DIRECT CURRENT	LAV	LAVATORY	RPG	RADAR PRODUCTS GENERATOR		
DDG	DIESEL DRIVEN GENERATOR	LBL	LABEL	RPGOP	RADAR PRODUCTS		
DDS	DOOR INTERLOCKED DISCONNECT SWITCH	LBS OR #	POUNDS		GENERATOR OPERATOR		
DEG	DEGREE	LC	LIGHTING CONTACTOR	RPM	REVOLUTIONS PER MINUTE		
DEPT	DEPARTMENT	LD	LOAD	RS	REFRIGERANT SUCTION LINE		
DES	DESIGN	LF	LINEAR FOOT (FEET)	RVS	REVERSE (SIDE)		
DET	DETECTION	LG	LONG/LENGTH				
DIA	DIAMETER	LH	LEFT HAND	S	SOUTH		
DIAG	DIAGONAL/DIAGRAM	LHR	LEFT HAND REVERSE	SA	SUPPLY AIR		
DIM	DIMENSION	LKR	LOCKER	SBSB	SPLASH BLOCK		
DISC	DISCONNECT	LL	LIVE LOAD	SC	SOLID CORE		
DISP	DISPENSER	LLH	LONG LEG HORIZONTAL	SCHED	SCHEDULE		
DIV	DIVISION	LLV	LONG LEG VERTICAL	SCT	STRUCTURAL CLAY TILE		
DK	DECK	LP	LIGHTING PANEL	SD	SMOKE DAMPER		
DL	DEAD LOAD	LT	LIGHT	SD	SMOKE DETECTOR		
DMC	DEPUTY METEOROLOGIST IN CHARGE	LTC	LEE-TEMP CONTROL	SD	SOAP DISPENSER		
DN	DOWN			SD	STORM DRAIN		
DN	DOWNSPOUT NOZZLE	LTG	LIGHTING	SEC	SECTION		
DO	DITTO	LTL	LINTEL	SEP	SEWAGE EJECTOR PUMP		
DOH	DEVELOPMENT & OPERATIONS	LW	LIGHTWEIGHT	SERV	SERVICE		
	HYDROLOGIST	L PT	LOW POINT	SEW	SEWER		
DP	DISTRIBUTION PANEL			SF	SPECIAL FRAME		
DR	DOOR			SHT	SHEET		
DS	DOWNSPOUT/DISCONNECT SWITCH	M	METER(S)/MOTOR	SHLD	SHIELD(ED)		
DTL	DETAIL	mA	MILLIAMPERE	SIM	SIMILAR		
DW	DISHWASHER	MACH	MACHINE	SM	SURFACE MOUNTED		
DWG	DRAWING	MAN	MANUAL	SMACNA	SHEET METAL AND		
°F	DEGREE FAHRENHEIT	MAS	MASONRY		AIR CONDITION CONTRACTORS		
		MATL	MATERIAL(S)		NATIONAL ASSOCIATION		
E	EAST/ELECTRIC (CMIL)	MAX	MAXIMUM	SP	STATIC PRESSURE		
EA	EACH	MB	MACHINE BOLT	SPCS	SPACES		
EAT	ENTERING AIR TEMPERATURE	MBH	1000 X BTU/HR	SPEC	SPECIFICATIONS		
EB	EXPANSION BOLT	MBR	MEMBER	SPK	SPEAKER		
EC	END OF CURVE	MCA	MAXIMUM CIRCUIT AMPS	SQ	SQUARE		
EDH	ELECTRIC DUCT HEATER	MCB	MAIN CIRCUIT BREAKER	SS	SANITARY SEWER		
EF	EACH FACE/EXHAUST FAN	MD	MANUAL DAMPER	SS	SERVICE SINK		
EJ	END JACK/EXPANSION JOINT	MECH	MECHANICAL	SS	STAINLESS STEEL		
EL	ELEVATION	MEMB	MEMBRANE	SSPC	STEEL STRUCTURE PAINTING COUNCIL		
ELEC	ELECTRIC(AL)	MFR	MANUFACTURER	SST	SATURATED SUCTION TEMPERATURE		
ELEC CHAR	ELECTRIC CHARACTERISTIC	MG	MOTOR GENERATOR	ST	STREET/SURGE TANK		
ELEV	ELEVATOR	MH	MANHOLE	STA	STATION		
EMER	EMERGENCY	MIC	METEOROLOGIST IN CHARGE	STC	SOUND TRANSMISSION CLASS		
EMT	ELECTRICAL METALLIC TUBING	MIN	MINIMUM	STC	SOUND TRANSMISSION COEFFICIENT		
ENCL	ENCLOSURE	MISC	MISCELLANEOUS	STD	STANDARD		
ENG	ENGINE	MK	MARK	STL	STEEL		
ENGR	ENGINEER	MLDG	MOLDING	STOR	STORAGE		
EPDM	ETHYLENE PROPYLENE DIENE	MLO	MAIN LUGS ONLY	ST P	STAND PIPE		
	MONOMER	MLOS	MICROWAVE LINE-OF-SIGHT	STR	STRUCTURAL		
EQ	EQUAL	MM	MILLIMETER	STS	STORM SEWER		
EQUIP	EQUIPMENT	MO	MASONRY OPENING	SUBFL	SUBFLOOR		
ESC	ELECTRONIC SPEED CONTROL	MOD	MOTOR OPERATED DAMPER	SUSP	SUSPENDED		
ESP	EXTERNAL STATIC PRESSURE	MOCP	MAXIMUM OVERCURRENT	SW	SWITCH		
EW	EACH WAY		PROTECTION	SYM	SYMMETRICAL		
EWC	ELECTRIC WATER COOLER	MS	MOP SINK/2" DEEP SEMI-RECESSED	SYS	SYSTEM		
EWH	ELECTRIC WATER HEATER		MOUNTING SLEEVE				
EXH	EXHAUST	MTD	MOUNTED				
EXP	EXPANSION	MTG	MOUNTING				
EXT	EXTERIOR	MTL	METAL				
EXTG	EXISTING	MULL	MULLION				

REFERENCE SYMBOLS

SECTION, DETAIL OR ELEVATION

SEC, DTL OR ELEV
SCALE: 1/4"=1'-0"

COLUMN LINE REFERENCE

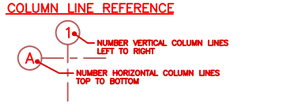

DETAIL REFERENCE

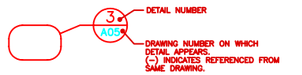

SECTION REFERENCE

ARCHITECTURAL FULL WALL SECTION REFERENCE

ARCHITECTURAL ELEVATION REFERENCE

NORTH ARROW

DOOR NUMBER

ACCESSORY SYMBOL

PARTITION SYMBOL

WORKING POINT

CONTROL JOINT/RAKE JOINT

GRAPHIC SCALE

NOTE REFERENCE

[1] A NUMBER WITHIN A BOX INDICATES A SPECIFIC NOTE REFERENCED ON THE SAME DRAWING

PARTITION TYPES

MARK	DESCRIPTION	SKETCH
A	ONE LAYER 5/8" GYPSUM BOARD APPLIED PARALLEL TO 7/8" STL FURRING CHANNELS AT 16" OC. ATTACHED TO CONCRETE WALL WITH 1" DRYWALL SCREWS AT 24" OC AT VERTICAL EDGES AND 16" OC AT INTERMEDIATE CHANNELS. STC RANGE: N/A FIRE RATING: N/A	
C	BASE LAYER 5/8" GYPSUM WALLBOARD APPLIED PERPENDICULAR AND OR PARALLEL TO EACH SIDE OF 2 7/2" STL STUDS AT 16" OC WITH 1" DRYWALL SCREWS AT 24" OC FACE LAYER 5/8" GYPSUM WALLBOARD APPLIED PERPENDICULAR AND OR PARALLEL TO EACH SIDE OF STUDS WITH 1 5/8" DRYWALL SCREWS 12" OC. STAGGER ALL VERTICAL AND HORIZONTAL JOINTS 16" OC EACH SIDE. STC RANGE: N/A FIRE RATING: N/A	
C[4]	SAME AS C WITH 2 1/2" FIBER BATT INSULATION IN CAVITY. STC RANGE: 50-54 FIRE RATING: N/A	
D	ONE LAYER 5/8" GYPSUM WALLBOARD APPLIED PARALLEL TO 3 5/8" STL STUDS AT 16" OC. STC RANGE: N/A FIRE RATING: N/A	
D	ONE LAYER 5/8" GYPSUM WALLBOARD APPLIED PERPENDICULAR OR PARALLEL TO EACH SIDE OF 3 5/8" STL STUDS AT 16" OC WITH 1" DRYWALL SCREWS AT 8" OC TO VERTICAL EDGES AND TOP AND BOTTOM RUNNERS, AND 12" OC TO INTERMEDIATE STUDS. STAGGER ALL VERTICAL AND HORIZONTAL JOINTS 16" OC EACH SIDE. STC RANGE: N/A FIRE RATING: N/A	
D[4]	SAME AS D WITH 3 1/2" FIBER BATT INSULATION. STC RANGE: N/A FIRE RATING: N/A	
F	SAME AS D W/ 6" STL STUDS STC RANGE: N/A FIRE RATING: N/A	
F[4]	SAME AS D WITH 6" FIBER BATT INSULATION AND 6" STL STUDS. STC RANGE: 45-49 FIRE RATING: N/A	
G[4]	CHASE WALL: ONE LAYER 5/8" GYPSUM WALLBOARD ON TWO ROWS OF 2 1/2" STL STUDS AT 16" OC WITH 2 LAYERS OF 3 1/2" FIBER BATT INSULATION. WIDTH AS INDICATED ON THE PLANS. (ATTACHMENT SAME AS DESCRIBED FOR D). STC RANGE: N/A FIRE RATING: N/A	

LIST OF DRAWINGS

REV	DWG NO	DRAWING TITLE
1	SKA01	COVER SHEET
1	I01	INDEX/GENERAL INFORMATION
1	C01	OVERALL SITE PLAN
1	C02	SITE AND UTILITIES PLAN
1	C03	FINISH GRADING PLAN
1	C04	SECTIONS AND DETAILS SHEET 1 OF 3
1	C05	SECTIONS AND DETAILS SHEET 2 OF 3
1	C06	SECTIONS AND DETAILS SHEET 3 OF 3
1	A01	LANDSCAPE PLAN
1	A02	FLOOR PLAN
1	A03	ELEVATIONS
1	A04	WALL SECTIONS/DETAILS
1	A05	DETAILS
1	A06	REFLECTED CEILING PLAN
1	A07	ROOF PLAN/DETAILS
1	A08	DETAILS AND INTERIOR ELEVATIONS SHEET 1 OF 2
1	A09	DETAILS AND INTERIOR ELEVATIONS SHEET 2 OF 2
1	A10	SCHEDULES
1	A11	DDG/STORAGE BUILDING PLAN/ ELEVATIONS AND DETAILS
1	S01	FOUNDATION PLAN
1	S02	ROOF FRAMING PLAN
1	S03	FOUNDATION SECTIONS AND DETAILS SHEET 1 OF 2
1	S04	FOUNDATION SECTIONS AND DETAILS SHEET 2 OF 2
1	S05	MISCELLANEOUS CONCRETE DETAILS
1	S06	COLUMN AND ANCHOR BOLT SCHEDULES/FRAMING ELEVATIONS
1	S07	FRAMING ELEVATIONS
1	S08	FRAMING SECTIONS AND DETAILS SHEET 1 OF 3
1	S09	FRAMING SECTIONS AND DETAILS SHEET 2 OF 3
1	S10	FRAMING SECTIONS AND DETAILS SHEET 3 OF 3
1	S11	DDG/STORAGE BUILDING PLANS, SECTIONS AND DETAILS
1	S12	DDG/STORAGE BUILDING SECTIONS AND DETAILS
1	S13	TRASH ENCLOSURE, PLANS, SECTIONS AND DETAILS
1	S14	MISCELLANEOUS YARD STRUCTURES
1	M01	PLUMBING PLAN
1	M02	PLUMBING DETAILS AND SCHEDULES
1	M03	HVAC PLAN
1	M04	HVAC SECTIONS AND DETAILS
1	M05	HVAC TEMPERATURE CONTROLS
1	M06	HVAC SYMBOLS, SCHEDULES AND LEGEND
1	M07	DIESEL DRIVEN GENERATOR AND FUEL TANK
1	M08	IRRIGATION PLAN
1	E01	LEGEND AND FIXTURE SCHEDULE
1	E02	ONE-LINE DIAGRAM
1	E03	PANELBOARDS, SCHEMATICS AND CONTROL DIAGRAMS
1	E04	ELECTRICAL SITE PLAN
1	E05	ELECTRICAL GROUNDING PLAN
1	E06	ELECTRICAL POWER PLAN
1	E07	COMMUNICATIONS AND CONTROLS PLAN
1	E08	ELECTRICAL LIGHTING PLAN
1	E09	ELECTRICAL DDG/STORAGE BUILDING
1	E10	ELECTRICAL SECTIONS AND DETAILS

NOTICE
TO BIDDERS ONLY

DRAWINGS MAY NOT NECESSARILY BE FULL SIZE. THE BIDDERS SHALL VERIFY THE SCALE OF EACH DRAWING WITH THE BAR SCALES AND THE DIMENSIONS PROVIDED.

MATERIAL SYMBOLS

PLAN/ SECTION	MATERIAL	ELEVATION
	FLOOR TILE	
	CARPET	
	GLASS	
I	IRON OR STEEL	
	EARTH	
	SAND, GRAVEL, OR CRUSHED ROCK	
	STONE	
	ASPHALT PAVING	

PLAN/ SECTION	MATERIAL	ELEVATION
	CONCRETE	
	BRICK VENEER	
	MASONRY BLOCK	
	PLASTER, STUCCO, OR POURED GYPSUM	
Gypsum Board	GYPSUM BOARD	
	WOOD	
	INSULATION	
	ACOUSTICAL TILE	

CODE INFORMATION

GOVERNING CODES
1991 UNIFORM BUILDING CODE
1990 NATIONAL ELECTRICAL CODE
1988 UNIFORM PLUMBING CODE
1991 UNIFORM MECHANICAL CODE
AMERICAN CONCRETE INSTITUTE STANDARD 318-89
AISC SPECIFICATION FOR STRUCTURAL STEEL BUILDINGS ASD-89

GROSS AREA: 4,880 SQUARE FEET
OCCUPANCY: B2
OCCUPANT LOAD: 49 PERSONS
CONSTRUCTION TYPE: TYPE V N

NO.	DATE	PREPARED BY	CHECKED BY	FOR APPROVAL	ACCEPTANCE/ APPROVED	DESCRIPTION OF REVISION
1	5/12/95	CCT	MCK/MRD	BLR/TLS	FGR/JTS	REVISED PER AS-BUILT CONDITIONS

WFO / NEXRAD PROGRAM
PROJECT NO. GH01

PROGRAM MANAGEMENT SERVICES CONTRACTOR
FLUOR DANIEL
GOULD EVANS ARCHITECTS, P.A.
KANSAS CITY, MO.
U.S.A.

DRAWN: G. WEYFORTH
CHECKED: MCK
SUPV. ENGR.: M. DEATON
ENGR/PROJ. MGR.: BLR/TLS
ACCEPTANCE: FGR/JTS

SPECIAL ENGINEERING PROGRAM OFFICE (SEPO)
WEATHER FORECAST OFFICE
MOBILE, ALABAMA
INDEX/GENERAL INFORMATION

DRAWING NO.	SIZE	DWG. NO.	CLIN.	REV.
044131-	5	I01	GH	1

FDSP0004 05/09/95 07:53 CCT 12/1=1' KCGHR011

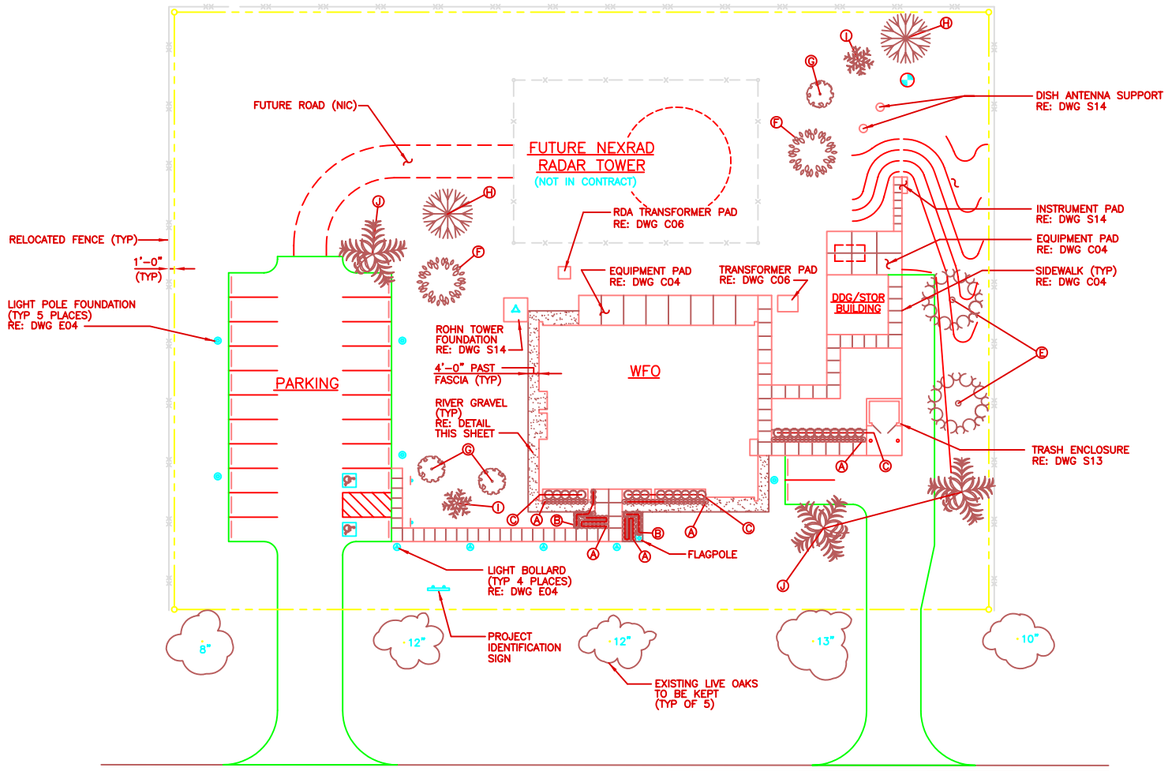

AIR FREIGHT RECEIVING ROAD

LANDSCAPE PLAN
SCALE: 1"=20'

BLDG NORTH

NOTES

1. SEED ALL AREAS DISTURBED BY CONSTRUCTION NOT OTHERWISE COVERED BY PAVING, BUILDING OR LANDSCAPING.
2. SEE CIVIL AND ELECTRICAL DRAWINGS FOR SITE LAYOUT, SIDEWALKS, LIGHTING AND PAVING.
3. LANDSCAPE DRAWING A01 IS FOR LANDSCAPE PURPOSES ONLY.
4. TREES SHALL BE PLANTED PER TYPICAL TREE PLANTING DETAIL.
5. SHRUBS SHALL BE PLANTED PER SPECIFICATIONS.
6. ASIATIC JASMINE SHALL BE PLANTED 18" OC W/ 4" GRADE "A" PINE MULCH.
7. YAUPON AND DWARF YAUPON SHALL BE PLANTED IN 4" GRADE "A" PINE MULCH BEDS AS INDICATED.
8. SEED ENTIRE AREA WITHIN THE WFO PROPERTY LINES.

0 10' 20' 40' 60'
SCALE: 1"=20'

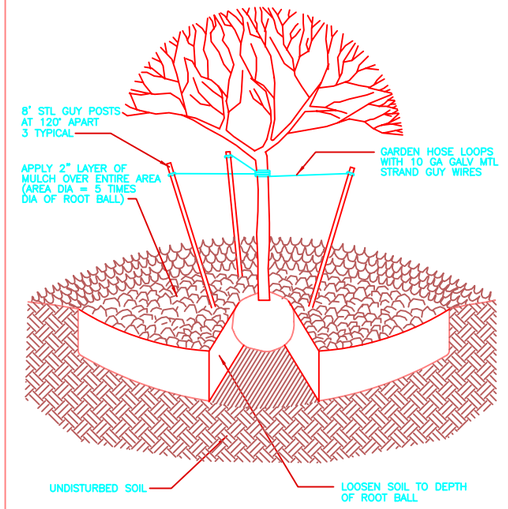

TYPICAL TREE PLANTING DETAIL
SCALE: NONE

NOTE: WATER HOLDING BERM NOT RECOMMENDED

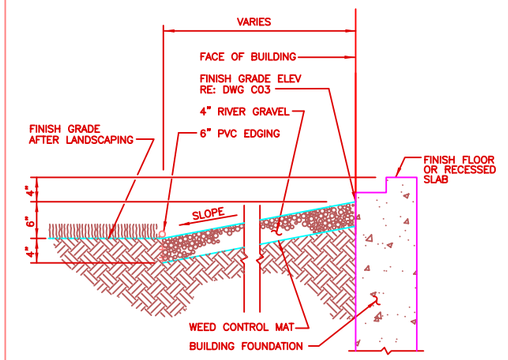

TYPICAL RIVER GRAVEL AND EDGING DETAIL
SCALE: NONE

PLANTING KEY

TYPE	COMMON NAME	BOTANICAL NAME	QTY	SIZE
A	ASIATIC JASMINE	TRACHELOSPERMUM JASMINOIDES	12" OC	4" POTS
B	INDIAN HYBRID AZALEAS	RHODODENDRON, INDICA HYBRIDS	14	1 GAL
C	DWARF YAUPON	ILEX VOMITORIA "NANA"	25	1 GAL
D	YAUPON	NOT USED	14	5 GAL
E	SOUTHERN MAGNOLIA	MAGNOLIA GRANDIFLORA	2	5' MIN
F	RIVER BIRCH	BETULA NIGRA	2	5' MIN
G	CRAPE MYRTLE	LAGERSTROEMIA INDICA	3	5 GAL
H	LEYLAND CYPRESS	X CUPRESSOCYPARIS LEYLANDII	2	5' MIN
I	SABAL PALM	SABAL PALMONE	2	5' MIN
J	CANARY ISLAND DATE PALM	PHOENIX CANARIENSIS	3	5' MIN

NO.	DATE	PREPARED BY	CHECKED BY	FOR APPROVED	ACTR./CORR. APPROVED	DESCRIPTION OF REVISION
1	5/12/95	CCT	MCK/MRD	BLR/TLS	FOR/JTS	REVISED PER AS-BUILT CONDITIONS

WFO / NEXRAD PROGRAM
PROJECT NO. GH01

PROGRAM MANAGEMENT SERVICES CONTRACTOR
FLUOR DANIEL
GOULD EVANS ARCHITECTS, P.A.
KANSAS CITY, MO. U.S.A.

DRWN. D. WEYFORTH
CHECKED MCK
SUPV. ENGR. M. DEATON
ENGR./PROJ. MGR. BLR/TLS
ACCTR./CORR. FOR/JTS

SPECIAL ENGINEERING PROGRAM OFFICE (SEPO)

WEATHER FORECAST OFFICE
MOBILE, ALABAMA

LANDSCAPE PLAN

044131-	SIZE 5	DWG. NO. A01	CLSN. GH	REV. 1

FDSP0004 05/09/95 10:55 CCT 1=20' KOSH4011

GENERAL NOTES

1. FOR DRAWING LIST, ABBREVIATIONS AND PARTITION TYPES SEE DWG I01.
2. DIMENSIONS ARE FROM COLUMN LINE TO FINISHED FACE OR FROM FINISHED FACE TO FINISHED FACE OF PARTITIONS UNLESS NOTED OTHERWISE.
3. FINISH FLOOR ELEV = 0'-0" (EXCEPT AT ACCESS FLOOR) SEE DRAWING C03 FOR ACTUAL ELEVATIONS.
4. SEE DRAWING C03 FOR SIDEWALK LOCATIONS.
5. DO NOT SCALE DRAWINGS.
6. PROVIDE VENETIAN BLINDS AT ALL EXTERIOR GLAZED OPENINGS EXCEPT AT VEST 101 AND SERV VEST 121 BLIND WIDTH SHALL FIT INSIDE MULLIONS AT ALL LOCATIONS.
7. PROVIDE VENETIAN BLINDS AT INTERIOR GLAZED OPENINGS OF MULTI-PURPOSE 107. BLIND WIDTH SHALL FIT INSIDE THE MULLIONS.
8. PROVIDE CONTINUOUS VAPOR RETARDER AT ALL EXT WALLS. SEAL AT ALL EDGES AND PENETRATIONS.
9. PROVIDE 3/4" PLYWOOD SHEETS MOUNTED WALL TO WALL (TYP FOR ALL WALLS). PLYWOOD SHALL EXTEND FROM 2" BELOW ACCESS FLOOR TO STRUCTURE ABOVE.
10. FOR TYPICAL EXTERIOR WALL CONSTRUCTION AND NOTES SEE DETAIL ON SHEET A05.
11. REFER TO ELEVATIONS, SHEET A03 FOR CONTROL JOINT LOCATIONS.
12. REFER TO SHEET A11 FOR DDG/STORAGE BUILDING DRAWINGS.

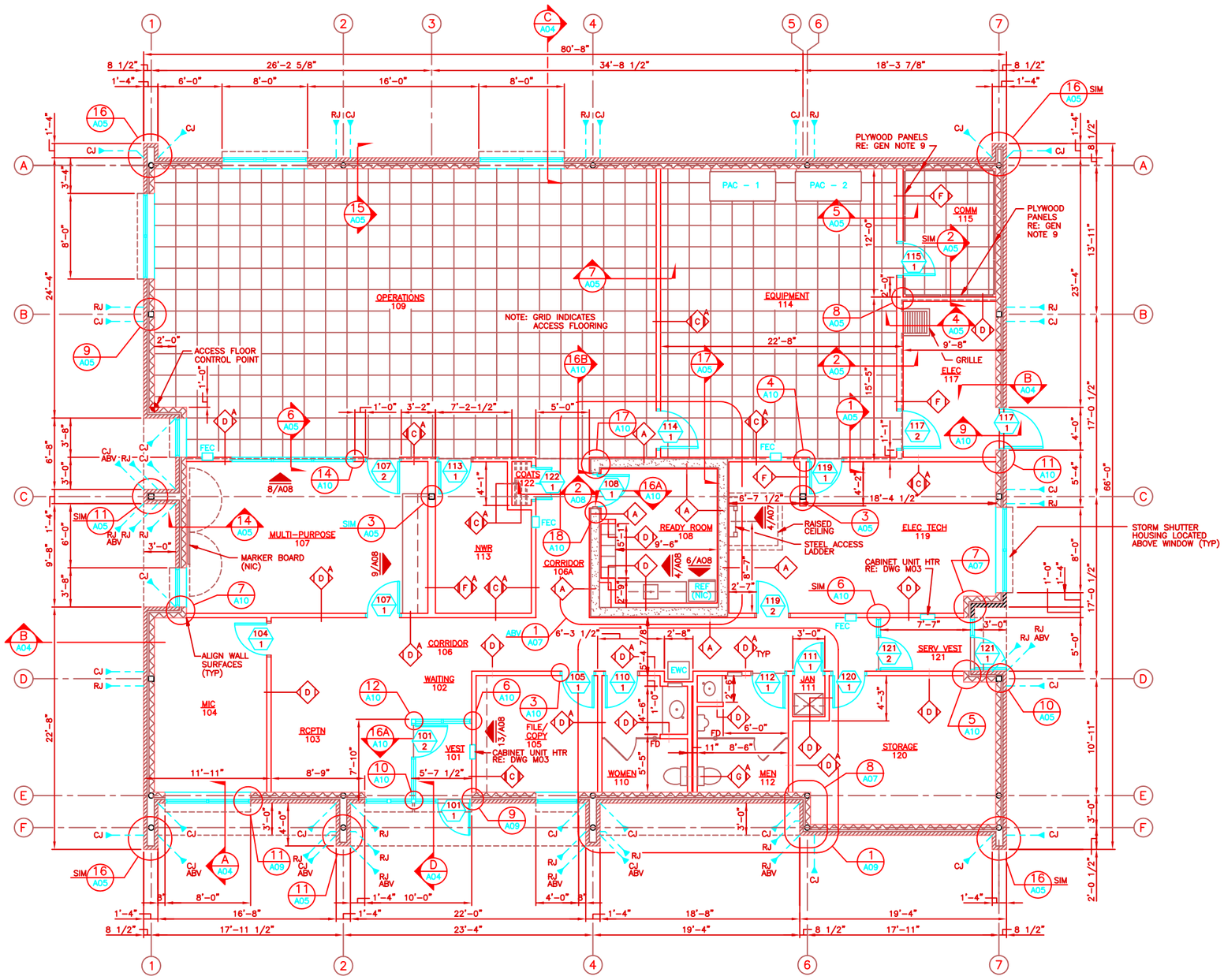

FLOOR PLAN
SCALE: 1/4"=1'-0"

BUILDING NORTH

0 2' 4' 8' 12'
SCALE: 1/4"=1'-0"

NO.	DATE	PREPARED BY	CHECKED BY	PIR APPROVED	ACTR/COTR APPROVED	DESCRIPTION OF REVISION
1	5/12/95	CCT	MCK/MRD	BLR/TLS	FGR/JTS	REVISED PER AS-BUILT CONDITIONS

WFO / NEXRAD PROGRAM
PROJECT NO. GH01

SPECIAL ENGINEERING PROGRAM OFFICE (SEPO)

DRAWN: G. WEYFORTH
CHECKED: MCK
SUPV. ENGR: M. DEATON
ENGR/PROJ. MGR: BLR/TLS
ACOTR/COTR: FGR/JTS

WEATHER FORECAST OFFICE
MOBILE, ALABAMA

FLOOR PLAN

PROGRAM MANAGEMENT SERVICES CONTRACTOR
FLUOR DANIEL
GOULD EVANS ARCHITECTS, P.A.
KANSAS CITY, MO. U.S.A.

SEPO

SIZE	DRG. NO.	CLSN.	REV.
044131-	5	A02	GH	1

FDSEP0004 05/09/95 10:56 CCT 12/1=1" KOSHA021

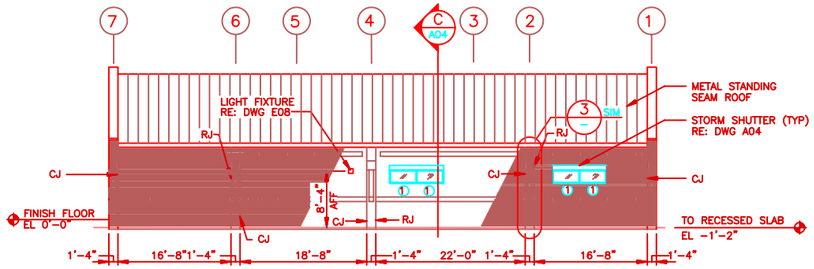

NORTH ELEVATION
SCALE: 1/8"=1'-0"

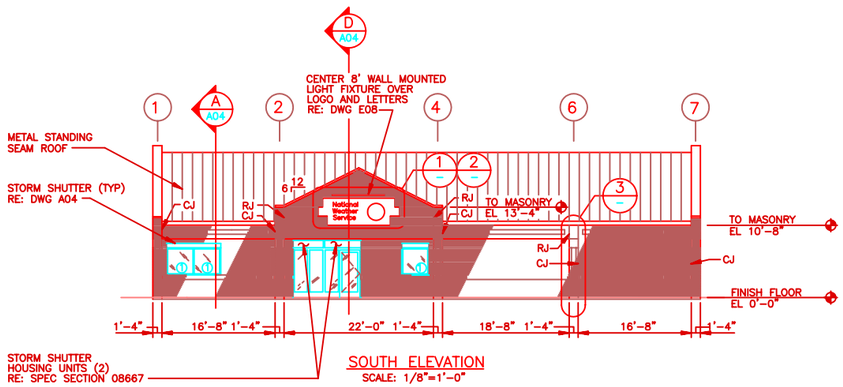

SOUTH ELEVATION
SCALE: 1/8"=1'-0"

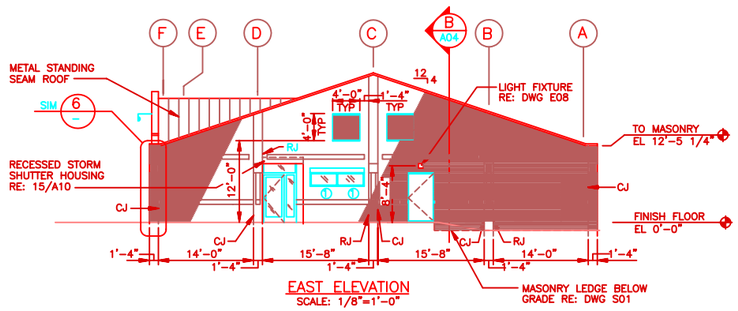

EAST ELEVATION
SCALE: 1/8"=1'-0"

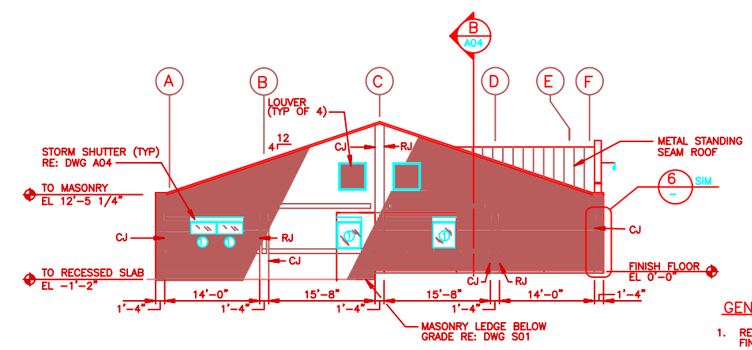

WEST ELEVATION
SCALE: 1/8"=1'-0"

GENERAL NOTES

1. RE: DWG C03 FOR ACTUAL FINISH FLOOR ELEVATION
2. FOUNDATION NOT SHOWN RE: DWG S01

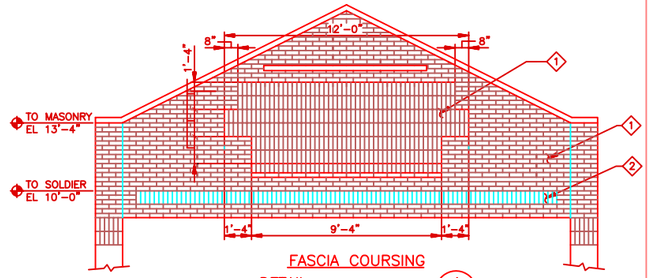

FASCIA COURSING
DETAIL 1
SCALE: 3/8=1'-0"

NOTE: CENTER BRICK PATTERN ON RIDGE OF ROOF.

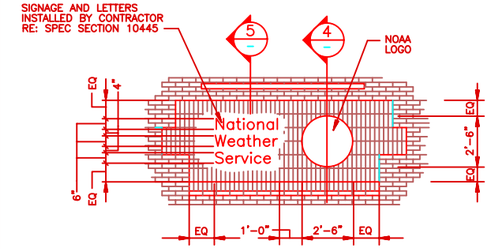

SIGNAGE
DETAIL 2
SCALE: 3/8=1'-0"

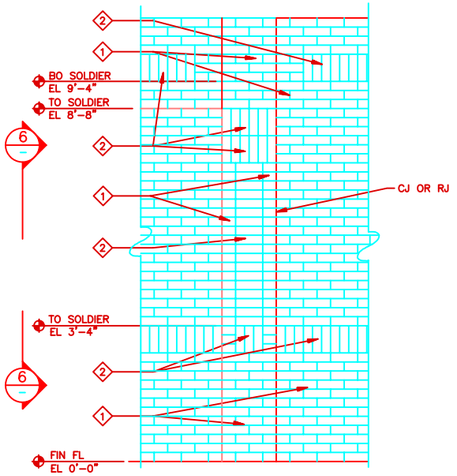

TYP BRICK COURSING
DETAIL 3
SCALE: 3/4"=1'-0"

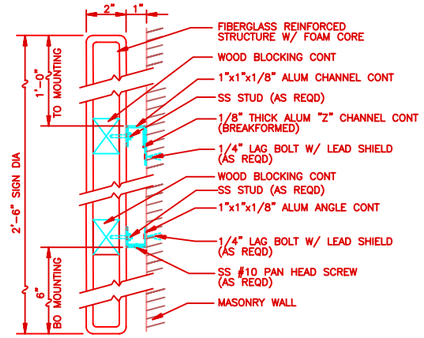

LOGO MOUNTING DETAIL
SECTION 4
SCALE: NONE

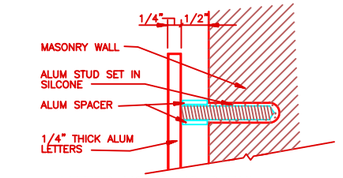

LETTER MOUNTING DETAIL
SECTION 5
SCALE: NONE

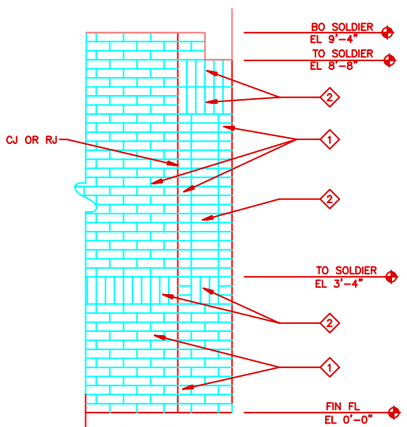

TYP BRICK COURSING
DETAIL 6
SCALE: 3/4"=1'-0"

KEY

GLASS SCHEDULE

① 1" CLEAR INSULATING GLASS

BRICK SCHEDULE

① BRICK, FIELD COLOR
② BRICK, ACCENT COLOR

0 1' 2' 3' 4'
SCALE: 3/4"=1'-0"

0 2' 4' 6' 8'
SCALE: 3/8"=1'-0"

0 4' 8' 16' 24'
SCALE: 1/8"=1'-0"

NO.	DATE	PREPARED BY	CHECKED BY	FOR APPROVAL	ACTR./COTR. APPROVAL	DESCRIPTION OF REVISION
1	5/12/95	CCT	MCK/MRD	BLR/TLS	FGR/JTS	REVISED PER AS-BUILT CONDITIONS

WFO / NEXRAD PROGRAM
PROJECT NO. GH01

PROGRAM MANAGEMENT SERVICES CONTRACTOR
FLUOR DANIEL
GOULD EVANS ARCHITECTS, P.A.
KANSAS CITY, MO.
U.S.A.

DRAWN: G. WEYFORTH
CHECKED: MCK
SUPV. ENGR.: M. DEATON
ENGR./PROJ. MGR.: BLR/TLS
ACOTR./COTR.: FGR/JTS

SPECIAL ENGINEERING PROGRAM OFFICE (SEPO)

WEATHER FORECAST OFFICE
MOBILE, ALABAMA

ELEVATIONS

044131-	5	A03	GH	1

FDSP0004 05/09/95 10:56 CCT 1/8=1' KCGHA031

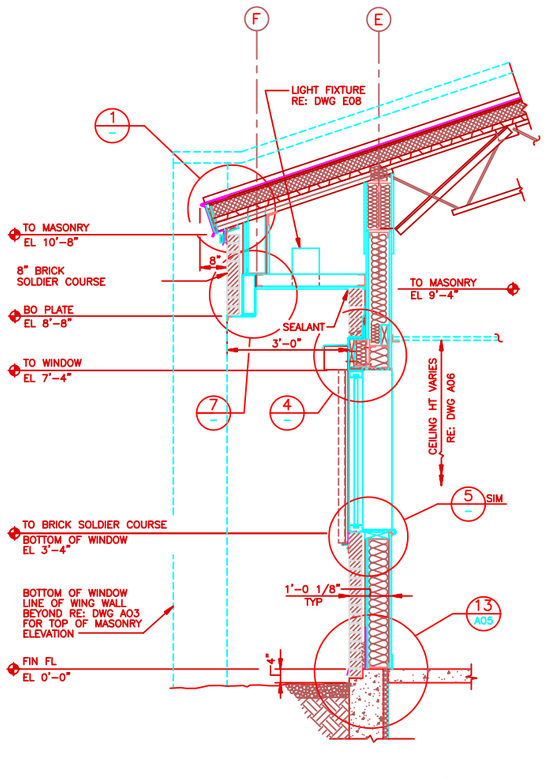

SECTION A
SCALE: 3/4"=1'-0"
A02 A03 A06 A07

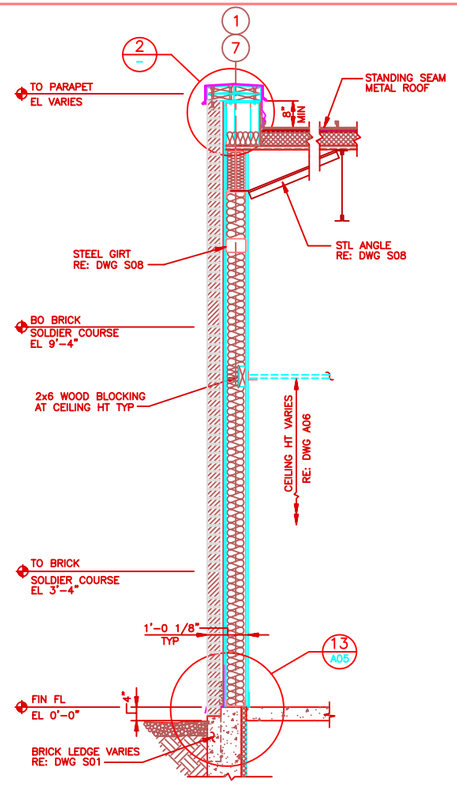

SECTION B
SCALE: 3/4"=1'-0"
A02 A03 A06 A07

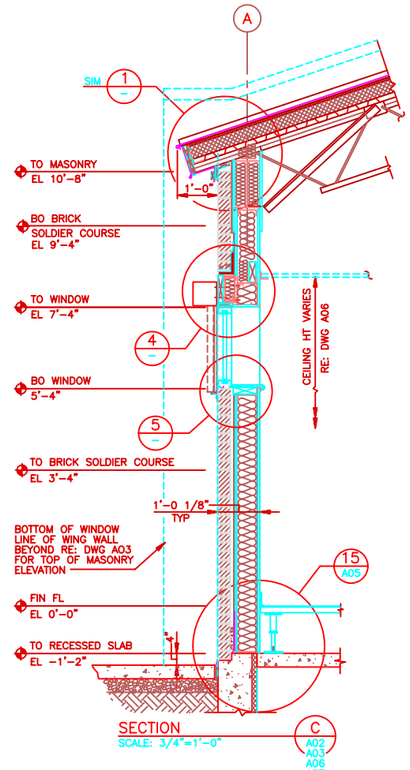

SECTION C
SCALE: 3/4"=1'-0"
A02 A03 A06 A07

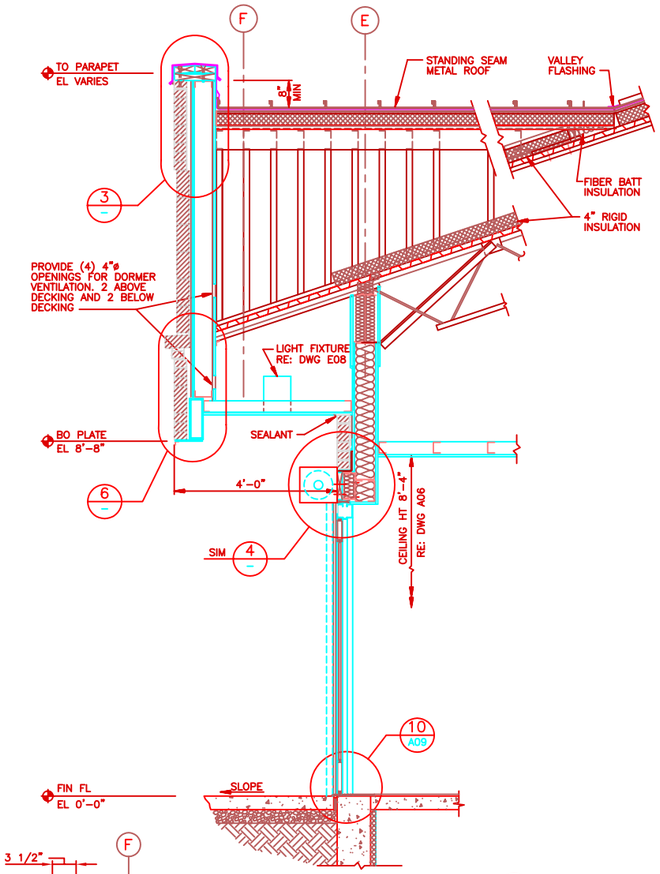

SECTION D
SCALE: 3/4"=1'-0"
A02 A03 A06 A07

NOTE: SEE STRUCTURAL DWGS FOR JOIST ATTACHMENT DETAILS

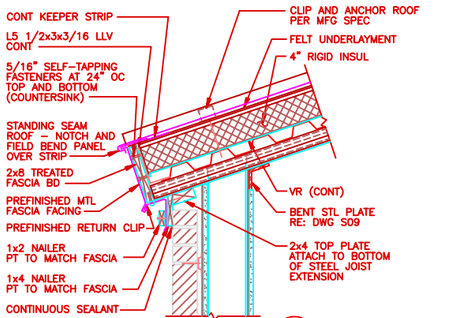

DETAIL 1
SCALE: 1 1/2"=1'-0"

NOTE: SEE STRUCTURAL DWGS FOR JOIST ATTACHMENT DETAILS

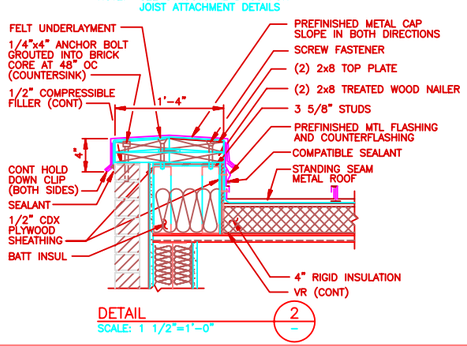

DETAIL 2
SCALE: 1 1/2"=1'-0"

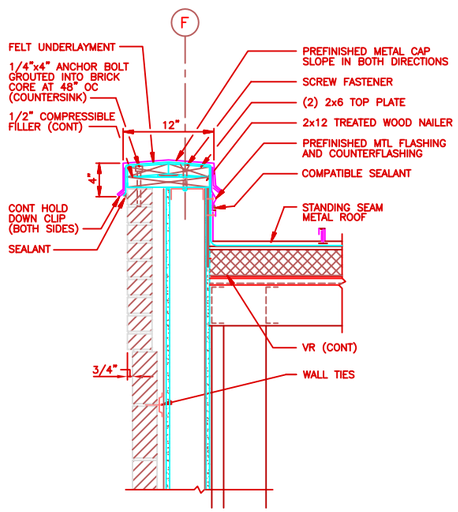

DETAIL 3
SCALE: 1 1/2"=1'-0"

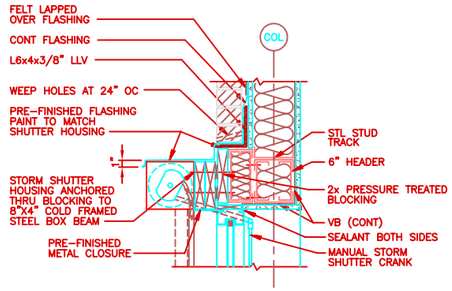

HEAD
DETAIL 4
SCALE: 1 1/2"=1'-0"

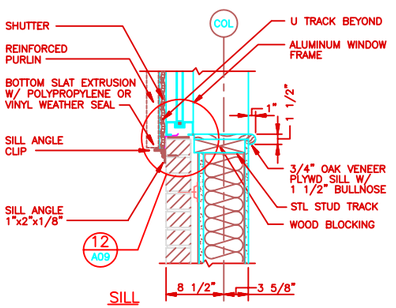

SILL
DETAIL 5
SCALE: 1 1/2"=1'-0"

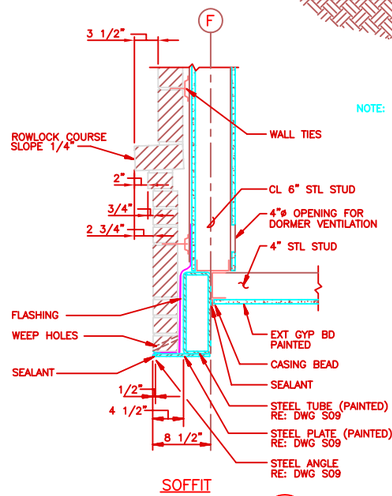

SOFFIT
DETAIL 6
SCALE: 1 1/2"=1'-0"

0 1' 2' 3' 4'
SCALE: 3/4"=1'-0"

0 6" 1' 2'
SCALE: 1 1/2"=1'-0"

NO.	DATE	PREPARED BY	CHECKED BY	FOR APPROVED	ACCEPTANCE/ APPROVED	DESCRIPTION OF REVISION
1	5/12/95	CCT	MCK/MRD	BLR/TLS	FGR/JTS	REVISED PER AS-BUILT CONDITIONS

WFO / NEXRAD PROGRAM
PROJECT NO. GH01

DRAWN G. WEYFORTH
CHECKED MCK
SUPV. ENGR. M. DEATON
ENGR/PROJ. MGR. BLR/TLS
ACCEPT./COTR FGR/JTS

SPECIAL ENGINEERING PROGRAM OFFICE (SEPO)
WEATHER FORECAST OFFICE
MOBILE, ALABAMA

WALL SECTIONS/DETAILS

PROGRAM MANAGEMENT SERVICES CONTRACTOR
FLUOR DANIEL
GOULD EVANS ARCHITECTS, P.A.
KANSAS CITY, MO. U.S.A.

SEPO

SIZE	DWG. NO.	CLIN.	REV.
044131-	5	A04	GH	1

FDSP0004 05/09/95 10:57 CCT 3/2=1" KOPH4041

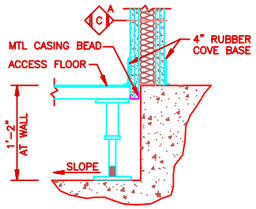

SECTION 1 A02
SCALE: 1 1/2"=1'-0"

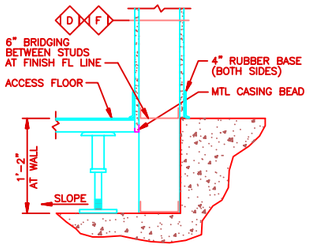

SECTION 2 A02
SCALE: 1 1/2"=1'-0"

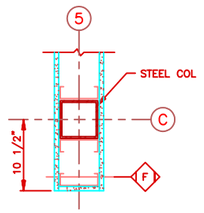

DETAIL 3 A02
SCALE: 1 1/2"=1'-0"

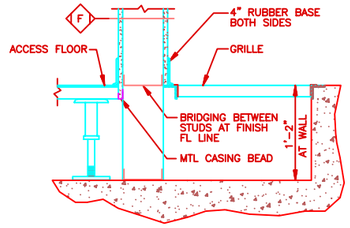

SECTION 4 A02
SCALE: 1 1/2"=1'-0"

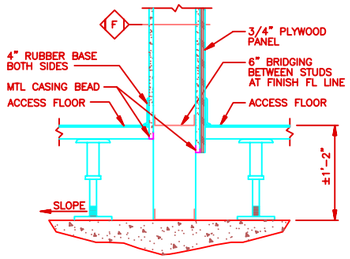

SECTION 5 A02
SCALE: 1 1/2"=1'-0"

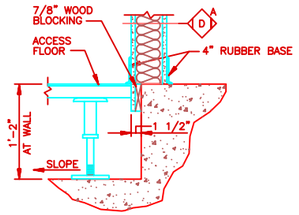

SECTION 6 A02
SCALE: 1 1/2"=1'-0"

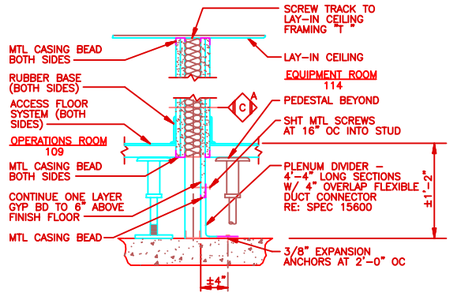

SECTION 7 A02
SCALE: 1 1/2"=1'-0"

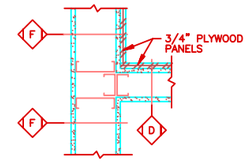

DETAIL 8 A02
SCALE: 1 1/2"=1'-0"

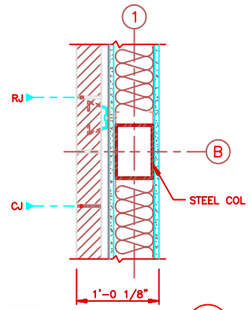

DETAIL 9 A02
SCALE: 1 1/2"=1'-0"

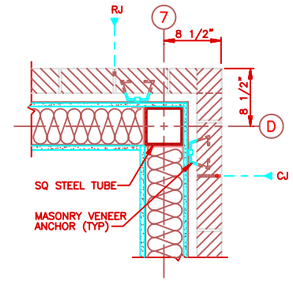

DETAIL 10 A02
SCALE: 1 1/2"=1'-0"

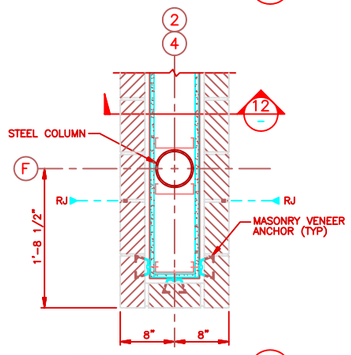

DETAIL 11 A02
SCALE: 1 1/2"=1'-0"

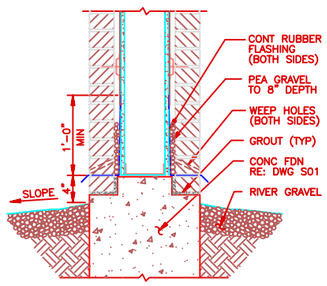

SECTION 12 —
SCALE: 1 1/2"=1'-0"

NOTE: GROUT FILL AIR SPACE BELOW FLASHING AT BRICK VENEER INSTALLED BELOW GRADE.

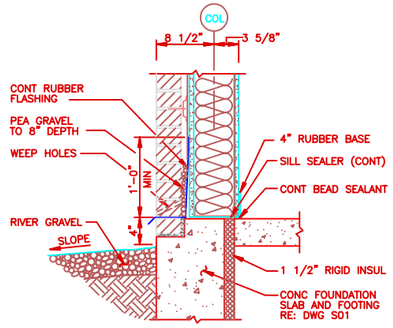

DETAIL 13 A04
SCALE: 1 1/2"=1'-0"

NOTE: GROUT FILL AIR SPACE BELOW FLASHING AT BRICK VENEER INSTALLED BELOW GRADE.

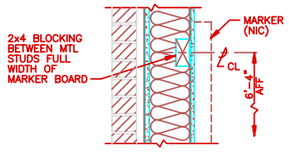

MARKER BOARD BLOCKING
SECTION 14 A02
SCALE: 1 1/2"=1-0"

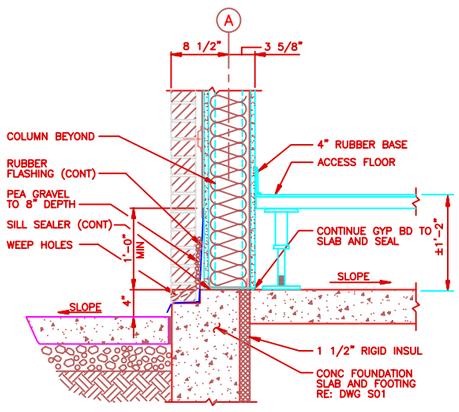

SECTION 15 A02 A04
SCALE: 1 1/2"=1'-0"

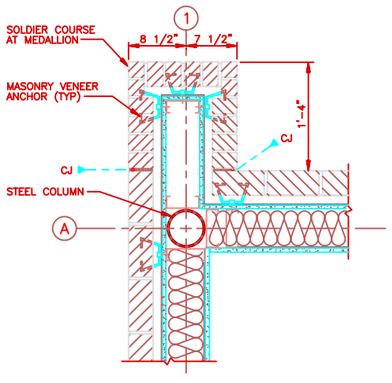

DETAIL 16 A02
SCALE: 1 1/2"=1'-0"

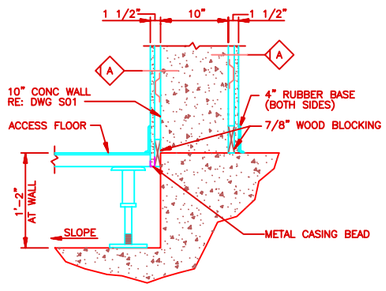

SECTION 17 A02
SCALE: 1 1/2"=1'-0"

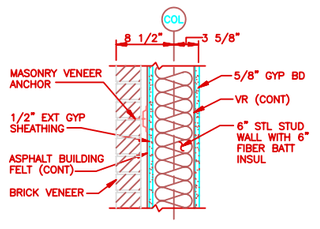

TYPICAL EXTERIOR WALL DETAIL
SCALE: 1 1/2"=1'-0"

0 6" 1' 2'
SCALE: 1 1/2"=1'-0"

NO.	DATE	PREPARED BY	CHECKED BY	APP'D/CONT APPROVED	DESCRIPTION OF REVISION
1	5/12/95	CCT	MCK/MRD	BLR/TLS	FOR/JTS REVISED PER AS-BUILT CONDITIONS

WFO / NEXRAD PROGRAM
PROJECT NO. GM01

DRAWN G. WEYFORTH
CHECKED MCK
SUPV. ENGR. M. DEATON
ENGR/PROJ. MGR. BLR/TLS
ACCPR./DIRR. FSR/JTS

SPECIAL ENGINEERING PROGRAM OFFICE (SEPO)
WEATHER FORECAST OFFICE
MOBILE, ALABAMA
DETAILS

PROGRAM MANAGEMENT SERVICES CONTRACTOR
FLUOR DANIEL GOULD EVANS ARCHITECTS, P.A.
KANSAS CITY, MO. U.S.A.

SEPO

044131-	SIZE 5	DWG. NO. A05	CUST. GH	REV. 1

FDSP0004 05/09/95 10:58 CCT 3/2=1' KG#A051

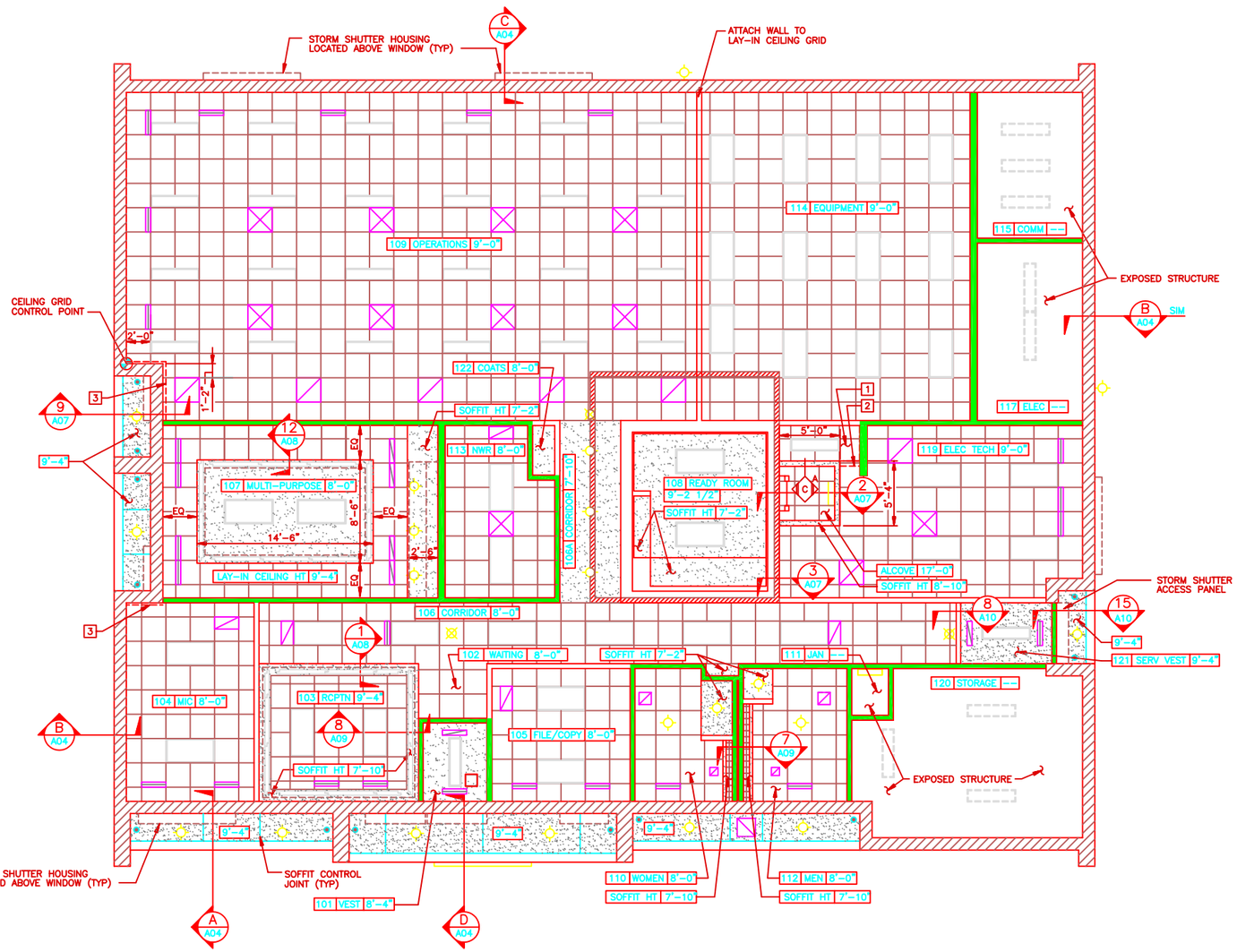

REFLECTED CEILING PLAN
SCALE: 1/4"=1'-0"

BUILDING NORTH

0 2' 4' 8' 12'
SCALE: 1/4"=1'-0"

REFLECTED CEILING SYMBOLS

RM NO | ROOM NAME | CLG HT

- FLUORESCENT FIXTURE
- FLUORESCENT FIXTURE
- FLUORESCENT FIXTURE – CHAIN HUNG OR PENDANT MOUNT
- WALL MOUNT FLUORESCENT FIXTURE
- STRIP FLUORESCENT FIXTURE
- COVE LIGHTING LOUVERS
- EXIT SIGN
- WALL MTD HIGH PRESSURE SODIUM
- RECESSED CAN LIGHT
- LINEAR SLOT DIFFUSER
- LINEAR SLOT RETURN
- 2 1/2" ø MTL SOFFIT VENT
- SUPPLY AIR DIFFUSER
- RETURN AIR GRILLE
- 2x2 ACST LAY-IN TILE CEILING GRID PATTERN
- INTERIOR PARTITION TO EXTEND TO BOTTOM OF DECK
- INTERIOR PARTITION GYP BOARD TO EXTEND MINIMUM 4" ABOVE CEILING
- GYP BOARD PARTITION ABOVE READY ROOM CEILING. WALL IS ATTACHED TO CONCRETE SLAB AND EXTENDS TO STRUCTURE ABOVE. RE: MECH EQUIPMENT SPACE PLAN
- EXTERIOR WALL STUDS TO EXTEND TO STRUCTURE
- GYPSUM BOARD CEILING
- 12" x 12" CEILING ACCESS PANEL
- SEE NOTE #1 BELOW

NOTES

1. LAY 6" SOUND BATT INSULATION ABOVE CEILING IN DESIGNATED AREA OF ELEC TECH ROOM #119.
2. DASHED LINES INDICATE TYPE D A WALL ABOVE CEILING. ATTACH TO DECK ABOVE. RE: 4/A07 SIM.
3. AT THE HEIGHT OF 9'-8" AFF, DO NOT APPLY GYPSUM BOARD SHEATHING TO STUDS IN ORDER TO ALLOW AIR MOVEMENT AT RELIEF AIR BOOT. REFER TO DRAWING M03

NO.	DATE	PREPARED BY	CHECKED BY	FOR APPROVED	ACTR./CORR. APPROVED	DESCRIPTION OF REVISION
1	5/12/95	CCT	MCK/MRD	BLR/TLS	FGR/JTS	REVISED PER AS-BUILT CONDITIONS

WFO / NEXRAD PROGRAM
PROJECT NO. GH01

DRAWN: G. WEYFORTH
CHECKED: MCK
SUPV. ENGR.: M. DEATON
ENGR/PROJ. MGR.: BLR/TLS
ACOTR./CORR.: FGR/JTS

SPECIAL ENGINEERING PROGRAM OFFICE (SEPO)
WEATHER FORECAST OFFICE
MOBILE, ALABAMA
REFLECTED CEILING PLAN

PROGRAM MANAGEMENT SERVICES CONTRACTOR
FLUOR DANIEL
GOULD EVANS ARCHITECTS, P.A.
KANSAS CITY, MO. U.S.A.

044131– | SIZE 5 | DWG. NO. A06 | CLIN. GH | REV. 1

FDSP0004 05/09/95 10:58 CCT 1/4=1' KCGHA061

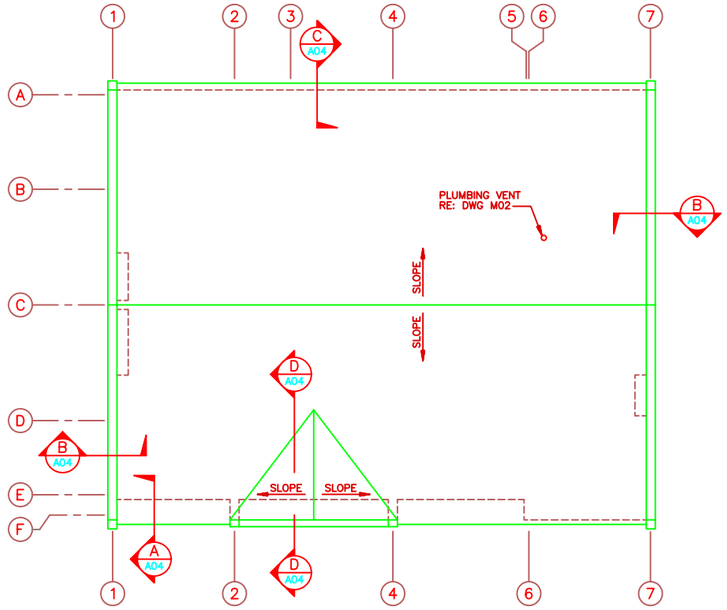

ROOF PLAN
SCALE: 1/8"=1'-0"

BUILDING NORTH

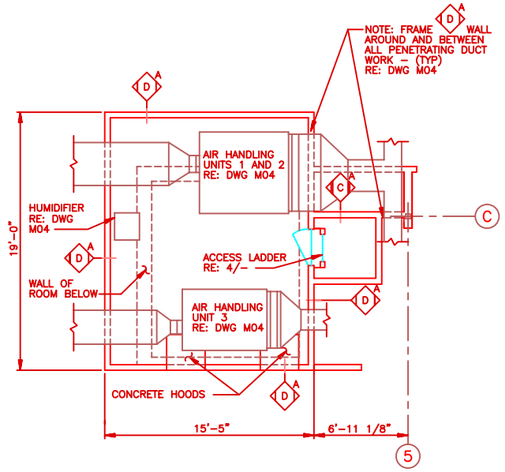

MECHANICAL EQUIPMENT SPACE PLAN
DETAIL 1 A02
SCALE: 1/4"=1'-0"

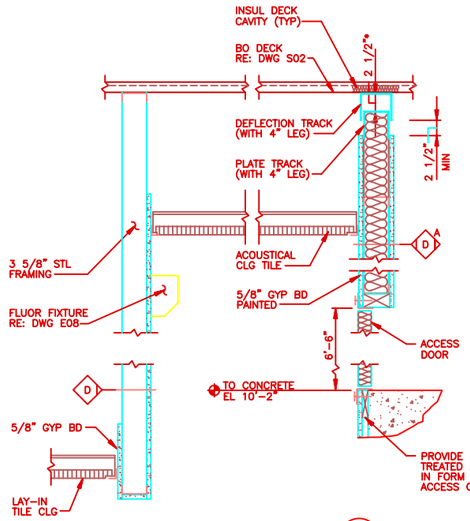

SECTION 2 A06
SCALE: 1 1/2"=1'-0"

* NOTE: DIMENSION AFTER DEAD LOAD IS APPLIED.

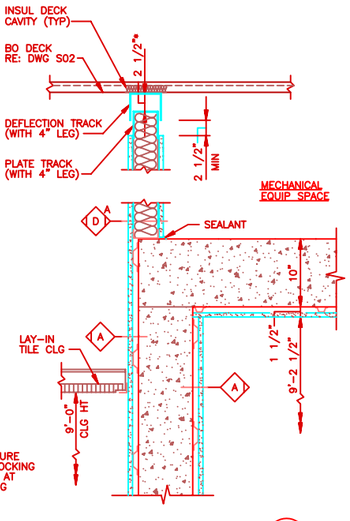

SECTION 3 A06
SCALE: 1 1/2"=1'-0"

* NOTE: DIMENSION AFTER DEAD LOAD IS APPLIED.

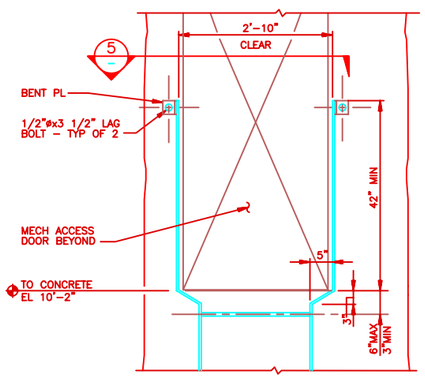

LADDER
ELEVATION 4 A02
SCALE: 1"=1'-0"

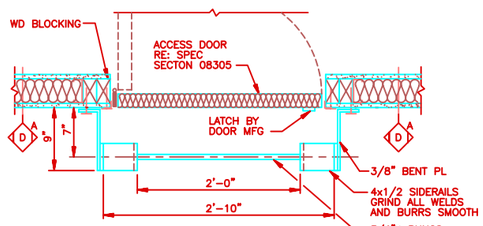

LADDER
SECTION 5 —
SCALE: 1 1/2"=1'-0"

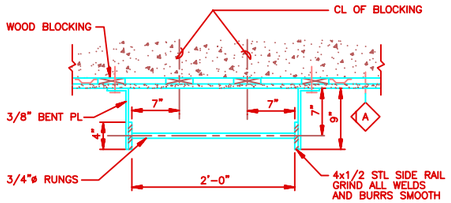

LADDER
SECTION 6 —
SCALE: 1 1/2"=1'-0"

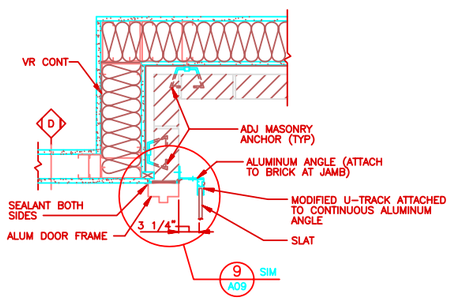

DETAIL 7 A02
SCALE: 1 1/2"=1'-0"

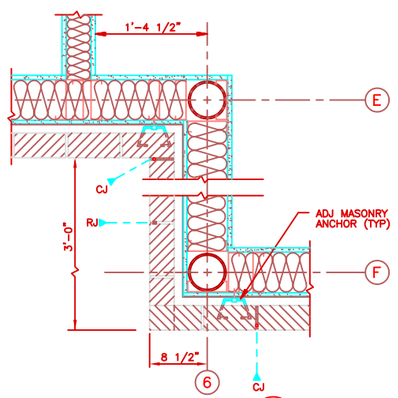

DETAIL 8 A02
SCALE: 1 1/2"=1'-0"

SECTION 9 A06
SCALE: 3/4"=1'-0"

0 4' 8' 16' 24'
SCALE: 1/8"=1'-0"

0 2' 4' 8' 12'
SCALE: 1/4"=1'-0"

0 1' 2' 3' 4'
SCALE: 3/4"=1'-0"

0 6" 1' 2' 3'
SCALE: 1"=1'-0"

0 6" 1' 2'
SCALE: 1 1/2"=1'-0"

0 3" 6" 1'-0"
SCALE: 3"=1'-0"

NO.	DATE	PREPARED BY	CHECKED BY	AS APPROVED	DESCRIPTION OF REVISION
1	5/12/95	CCT	MCK/MRD	BLR/TLS	FOR/JTS REVISED PER AS-BUILT CONDITIONS

WFO / NEXRAD PROGRAM
PROJECT NO. GH01

PROGRAM MANAGEMENT SERVICES CONTRACTOR
FLUOR DANIEL GOULD EVANS ARCHITECTS, P.A.
KANSAS CITY, MO. U.S.A.

DRAWN: D. WEYFORTH
CHECKED: MCK
SUPV. ENGR: M. DEATON
ENGR./PROJ. MGR.: BLR/TLS
ACOE/CORPS APPROVED: FOR/JTS

SPECIAL ENGINEERING PROGRAM OFFICE (SEPO)
WEATHER FORECAST OFFICE
MOBILE, ALABAMA
ROOF PLAN/DETAILS

044131- | 5 | A07 | GH | 1

FDSP0004 05/09/95 10:59 CCT 3/2=1" KG9HA071

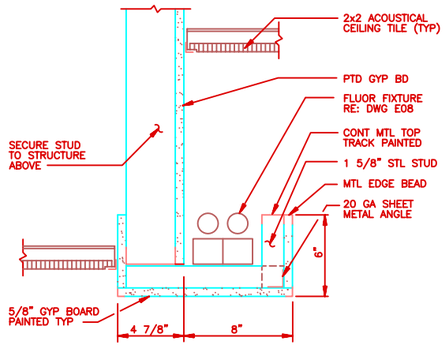

COVE LIGHT

SECTION — 1 / A06

SCALE: 3"=1'-0"

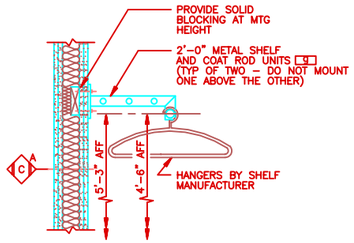

SHELF & COAT ROD

SECTION — 2 / A02

SCALE: 1 1/2"=1'-0"

ISOMETRIC DETAIL

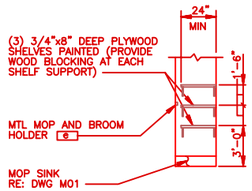

JANITOR #111

ELEVATION — 3 / A09

SCALE: 1/4"=1'-0"

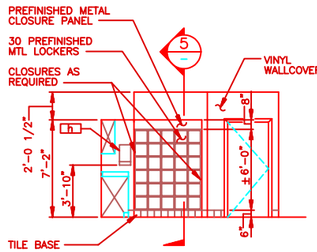

READY ROOM #108

ELEVATION — 4 / A02

SCALE: 1/4"=1'-0"

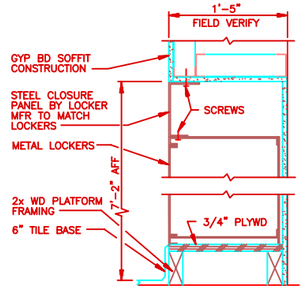

LOCKER HEAD/BASE

SECTION — 5 / —

SCALE: 1 1/2"=1'-0"

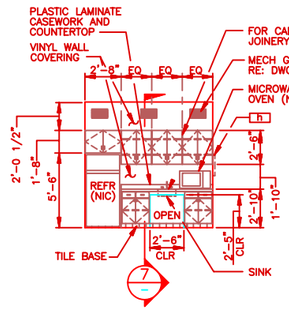

READY ROOM #108

ELEVATION — 6 / A02

SCALE: 1/4"=1'-0"

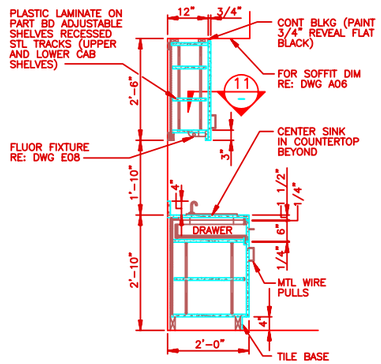

CABINETRY

SECTION — 7 / —

SCALE: 3/4"=1'-0"

NOTE: 1. INSULATE ALL EXPOSED PIPES.

2. 3/4" PART BD W/ PLASTIC LAMINATE FINISH FOR ALL BASE AND UPPER CABINETS, BACKSPLASH AND COUNTERTOP.

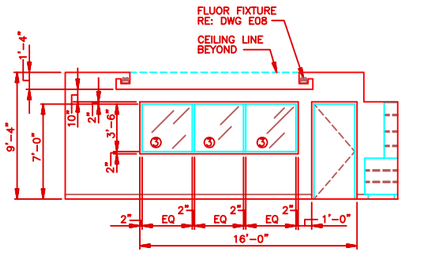

MULTI-PURPOSE ROOM #107

ELEVATION — 8 / A02

SCALE: 1/4"=1'-0"

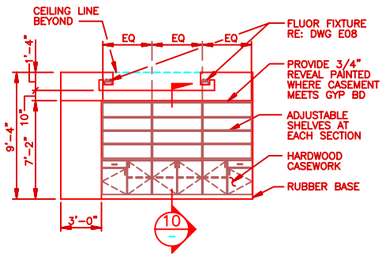

MULTI-PURPOSE #107

ELEVATION — 9 / A02

SCALE: 1/4"=1'-0"

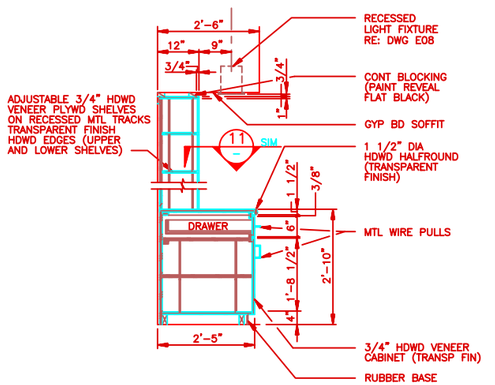

CABINETRY

SECTION — 10 / —

SCALE: 3/4"=1'-0"

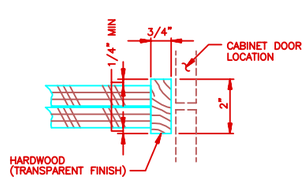

SECTION — 11 / —

SCALE: NONE

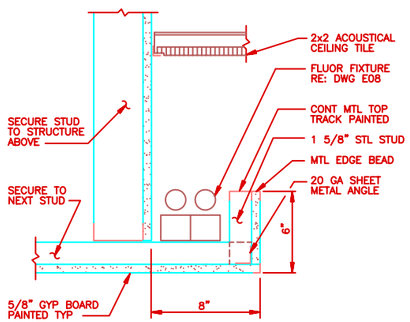

COVE LIGHT

SECTION — 12 / A06

SCALE: 3"=1'-0"

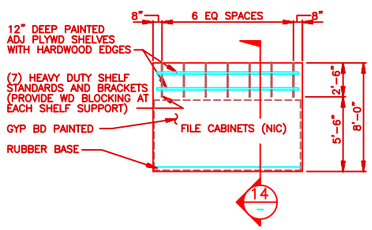

FILE/COPY #105

ELEVATION — 13 / A02

SCALE: 1/4"=1'-0"

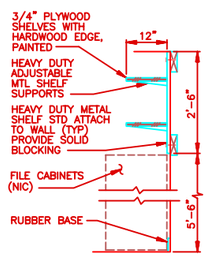

SHELVES

SECTION — 14 / —

SCALE: 3/4"=1'-0"

GLASS TYPES

③ 1/4" CLEAR GLASS

ACCESSORIES

e MOP AND BROOM HOLDER

g COAT ROD AND SHELF

h TOWEL DISPENSER

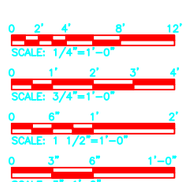

NO.	DATE	PREPARED BY	CHECKED BY	FOR APPROVED	ACTR./CONTR. APPROVED	DESCRIPTION OF REVISION
1	5/12/95	CCT	MCK/MRD	BLR/TLS	FGR/JTS	REVISED PER AS-BUILT CONDITIONS

WFO / NEXRAD PROGRAM
PROJECT NO. GH01

PROGRAM MANAGEMENT SERVICES CONTRACTOR
FLUOR DANIEL
GOULD EVANS ARCHITECTS, P.A.
KANSAS CITY, MO. U.S.A.

DRAWN: G. WEYFORTH
CHECKED: MCK
SUPV. ENGR.: M. DEATON
ENGR/PROJ. MGR.: BLR/TLS
ACCPT./CONTR. APPROVAL: FGR/JTS

SPECIAL ENGINEERING PROGRAM OFFICE (SEPO)

WEATHER FORECAST OFFICE
MOBILE, ALABAMA

DETAILS AND INTERIOR ELEVATIONS
SHEET 1 OF 2

SIZE	DWG. NO.	CLIN.	REV.
044131-	5	A08	GH	1

FDSP0004 05/09/95 10:59 CCT 3/4=1' KODHA081

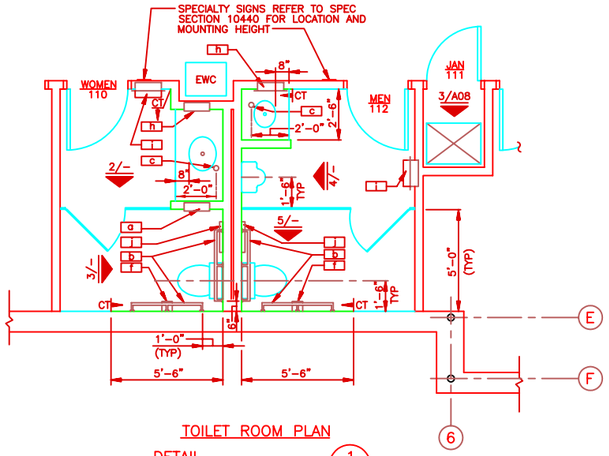

TOILET ROOM PLAN

DETAIL 1 / A02

SCALE: 3/8"=1'-0"

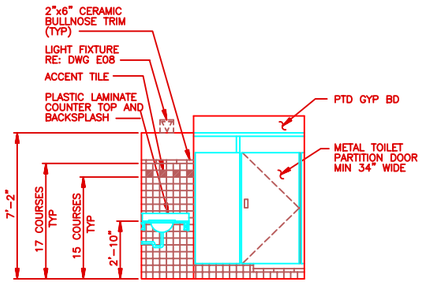

WOMEN #110

ELEVATION 2 / –

SCALE: 3/8"=1'-0"

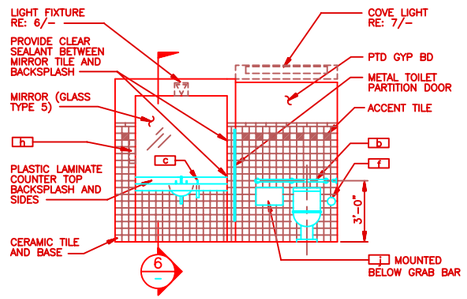

WOMEN #110

ELEVATION 3 / –

SCALE: 3/8"=1'-0"

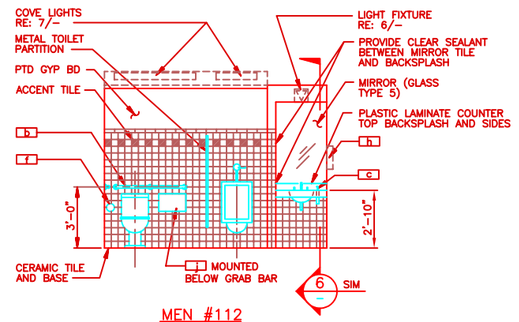

MEN #112

ELEVATION 4 / –

SCALE: 3/8"=1'-0"

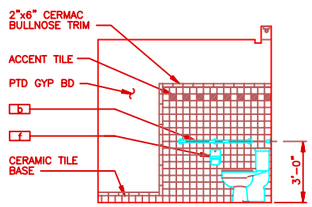

MEN #112

ELEVATION 5 / –

SCALE: 3/8"=1'-0"

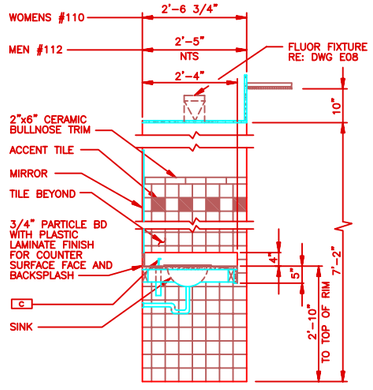

LAVATORY

SECTION 6 / –

SCALE: 3/4"=1'-0"

NOTE: INSULATE ALL EXPOSED PIPES

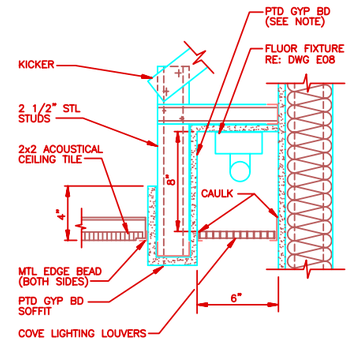

COVE LIGHT

SECTION 7 / A06

SCALE: 3"=1'-0"

NOTE: PAINT THE INTERIOR GYP BD OF COVE THE SAME COLOR AS SOFFIT.

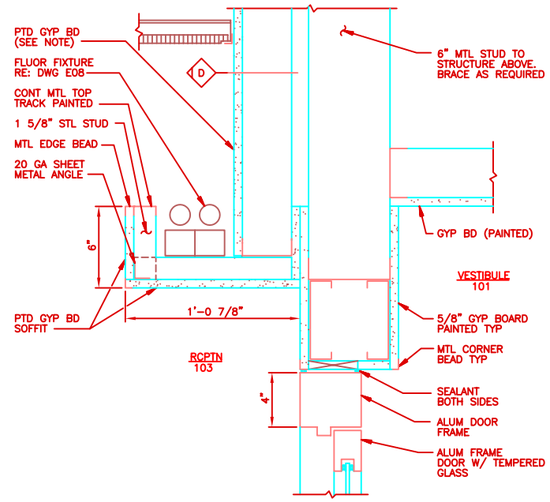

COVE LIGHT/HEAD

(SEE DOOR SCHEDULE A10)

DETAIL 8 / A06

SCALE: 3"=1'-0"

NOTE: PAINT THE INTERIOR GYP BD OF COVE THE SAME COLOR AS SOFFIT.

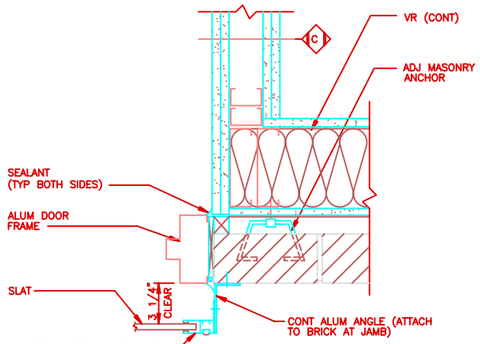

JAMB

DETAIL 9 / A02

SCALE: 3"=1'-0"

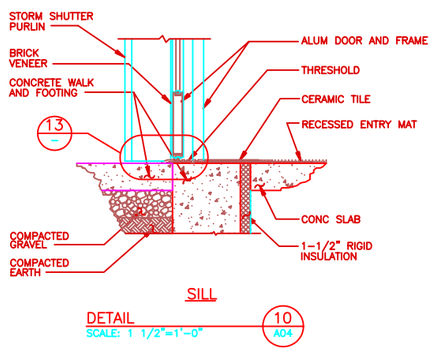

SILL

DETAIL 10 / A04

SCALE: 1 1/2"=1'-0"

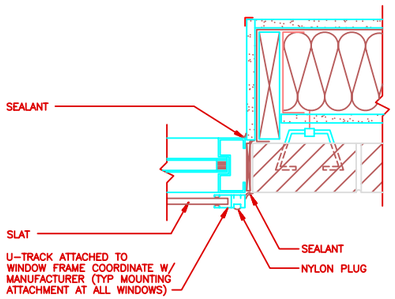

JAMB

DETAIL 11 / A02

SCALE: 3"=1'-0"

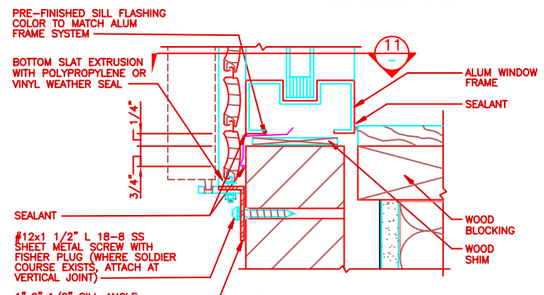

SILL

DETAIL 12 / A04

SCALE: NONE

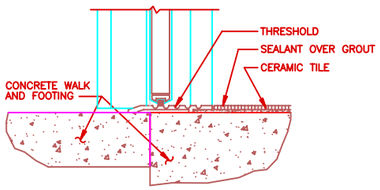

SILL

DETAIL 13 / –

SCALE: 3"=1'-0"

GLASS TYPES

ⓢ 1/4" CLEAR FLOAT MIRROR GLASS

ACCESSORIES

- [a] SANITARY NAPKIN/TAMPON VENDOR AND DISPOSAL UNIT (MOUNT TOP OF UNIT AT 4'-9" AFF)
- [b] GRAB BARS
- [c] SOAP DISPENSERS
- [f] TOILET TISSUE DISPENSER
- [h] TOWEL DISPENSER – RECESSED (MOUNT TOP OF UNIT AT 5'-0 1/2" AFF)
- [i] WASTE RECEPTACLE (MOUNT TOP OF UNIT AT 3'-2" AFF)
- [j] TOILET SEAT COVER DISPENSER (MOUNT TOP OF UNIT AT 3'-8 1/2" AFF)

0 2' 4' 6' 8" SCALE: 3/8"=1'-0"

0 1' 2' 3' 4' SCALE: 3/4"=1'-0"

0 6" 1' 2' SCALE: 1 1/2"=1'-0"

0 3" 6" 1'-0" SCALE: 3"=1'-0"

NO.	DATE	PREPARED BY	CHECKED BY	PE APPROVED	DESCRIPTION OF REVISION
1	5/12/95	CCT	MCK/MRD	BLR/TLS	FOR/JTS REVISED PER AS-BUILT CONDITIONS

WFO / NEXRAD PROGRAM

PROJECT NO. GH01

DRAWN: G. WEYFORTH

CHECKED: MCK

SUPV. ENGR: M. DEATON

ENGR/PROJ. MGR: BLR/TLS

ACCTR./CORR. APPROVED: FOR/JTS

SPECIAL ENGINEERING PROGRAM OFFICE (SEPO)

WEATHER FORECAST OFFICE

MOBILE, ALABAMA

DETAILS AND INTERIOR ELEVATIONS SHEET 2 OF 2

PROGRAM MANAGEMENT SERVICES CONTRACTOR: FLUOR DANIEL GOULD EVANS ARCHITECTS, P.A. KANSAS CITY, MO. U.S.A.

SEPO

044131– | SIZE 5 | DWG. NO. A09 | CLIN. GH | REV. 1

EDSP0004 05/09/95 10:60 CCT 3/1=1" KCGH4091

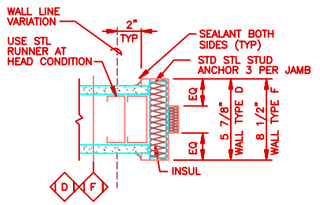

HEAD/JAMB #3
(SEE DOOR SCHEDULE THIS DWG)

DETAIL 3 A02
SCALE: 3"=1'-0"

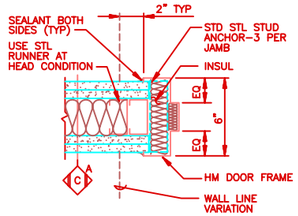

HEAD/JAMB #4
(SEE DOOR SCHEDULE THIS DWG)

DETAIL 4 A02
SCALE: 3"=1'-0"

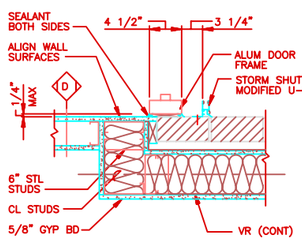

JAMB #5 AT SERV VEST
(SEE DOOR SCHEDULE THIS DWG)

DETAIL 5 A02
SCALE: 1 1/2"=1'-0"

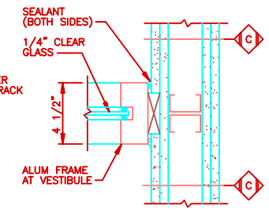

DETAIL 6 A02
SCALE: 3"=1'-0"

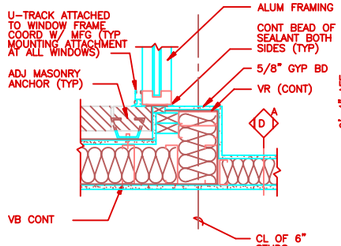

DETAIL 7 A02
SCALE: 1 1/2"=1'-0"

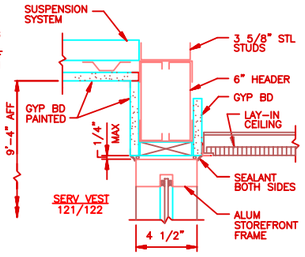

SECTION 8 A06
SCALE: 3"=1'-0"

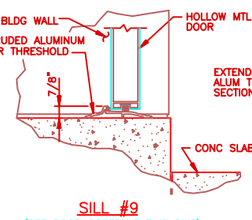

SILL #9
(SEE DOOR SCHEDULE THIS DWG)

SECTION 9 A02
SCALE: 3"=1'-0"

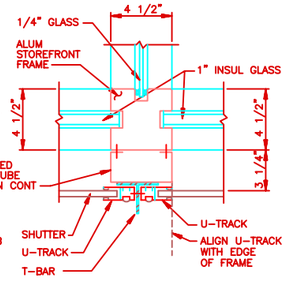

DETAIL 10 A02
SCALE: 3"=1'-0"

NOTE: FOLLOW STORM SHUTTER MANUFACTURERS RECOMMENDATIONS FOR ATTACHMENTS OF T-BAR AND U-TRACK ASSEMBLIES

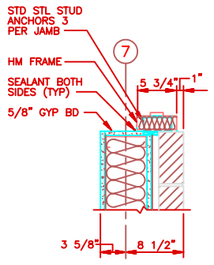

JAMB #11
(SEE DOOR SCHEDULE THIS DWG)

DETAIL 11 A02
SCALE: 1 1/2"=1'-0"

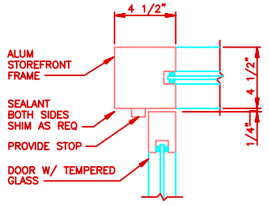

DETAIL 12 A02
SCALE: 3"=1'-0"

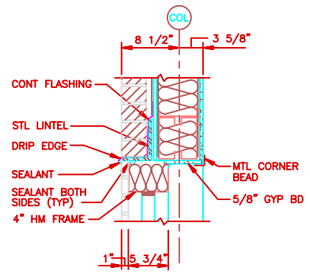

HEAD #13
1 1/2"=1'-0"
(SEE DOOR SCHEDULE THIS DWG)

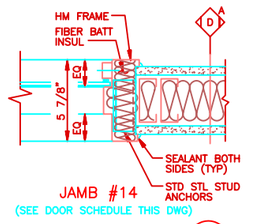

JAMB #14
(SEE DOOR SCHEDULE THIS DWG)

DETAIL 14 A02
SCALE: 3"=1'-0"

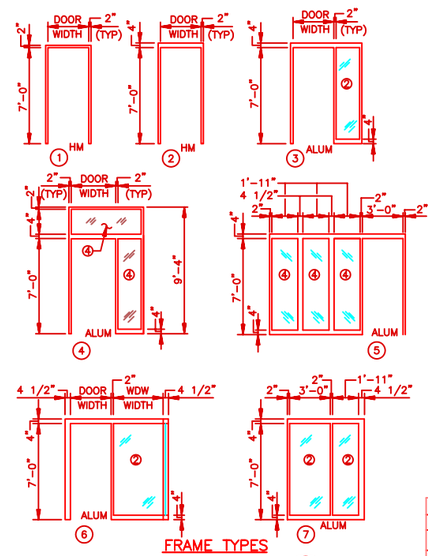

FRAME TYPES

ELEVATION 1
SCALE: NONE

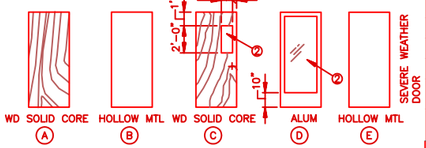

DOOR TYPES

ELEVATION 2
SCALE: NONE

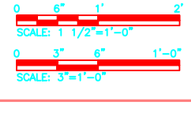

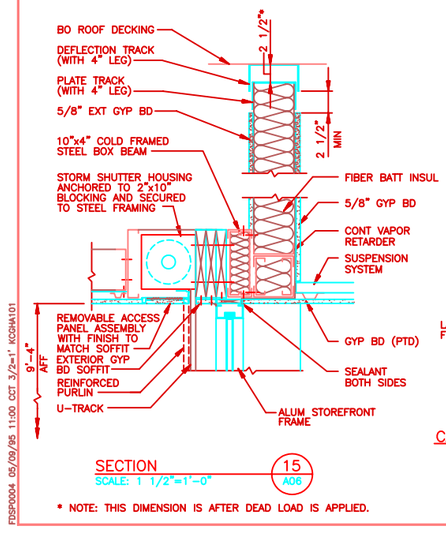

SECTION 15 A06
SCALE: 1 1/2"=1'-0"

* NOTE: THIS DIMENSION IS AFTER DEAD LOAD IS APPLIED.

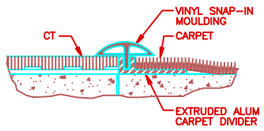

CARPET/TILE DIVIDER #16A
(SEE DOOR SCHEDULE THIS DWG)

SECTION 16A A02
SCALE: NONE

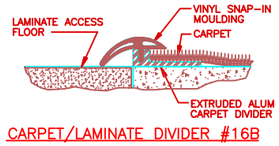

CARPET/LAMINATE DIVIDER #16B
(SEE DOOR SCHEDULE THIS DWG)

SECTION 16B A02
SCALE: NONE

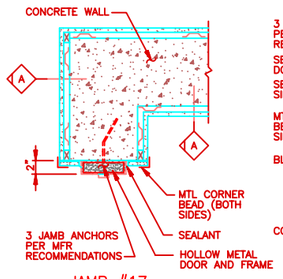

JAMB #17
(SEE DOOR SCHEDULE THIS DWG)

DETAIL 17 A02
SCALE: 1 1/2"=1'-0"

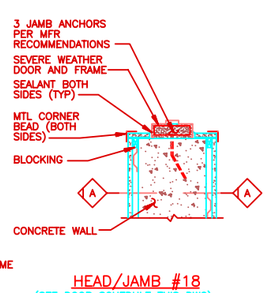

HEAD/JAMB #18
(SEE DOOR SCHEDULE THIS DWG)

DETAIL 18 A02
SCALE: 1 1/2"=1'-0"

DOOR SCHEDULE

MARK	DOOR		FRAME	DETAILS				REMARKS
DOOR NUMBER	TYPE	SIZE	TYPE	HEAD	JAMB	JAMB	SILL	
101/1	D	3'x7'	5	8/A09 SIM	9/A09	9/A09 SIM	10/A09	
101/2	D	3'x7'	6/7	8/A09	12/A10 SIM	12/A10	16A/A10	
104/1	A	3'x7'	1	3/A10	3/A10	3/A10	---	
105/1	A	3'x7'	1	3/A10	3/A10	3/A10	---	
107/1	C	3'x7'	1	3/A10	3/A10	3/A10	---	
107/2	C	3'x7'	1	3/A10	3/A10	3/A10	16B/A10	
108/1	E	3'x7'	1	18/A10	17/A10	18/A10	16A/A10	SEVERE WEATHER DOOR
110/1	A	3'x7'	1	3/A10	3/A10	3/A10	16A/A10	
111/1	A	2'-8"x7'	1	3/A10	3/A10	3/A10	16B/A10 SIM	UNDERCUT 1"
112/1	A	3'x7'	1	3/A10	3/A10	3/A10	16A/A10	
113/1	C	3'x7'	1	4/A10	4/A10	4/A10	16B/A10	
114/1	C	3'-6"x7'	1	4/A10	4/A10	4/A10	---	
115/1	B	3'x7'	1	3/A10	3/A10	3/A10	---	
116/1								NOT USED
117/1	B	3'-8"x7'	2	13/A10	11/A10	11/A10	9/A10	INSULATED DOOR
117/2	B	3'-6"x7'	1	3/A10	3/A10	3/A10	---	
118/1	B	3'x7'	2	13/A10	11/A10	11/A10	9/A10	PAIR-INSULATED DOOR
119/1	C	3'x7'	1	4/A10	4/A10	4/A10	---	
119/2	C	3'x7'	1	3/A10	3/A10	3/A10	---	
120/1	A	3'x7'	1	3/A10	3/A10	3/A10	16B/A10 SIM	
120A/1	B	3'x7'	2	13/A10	11/A10	11/A10	9/A10	INSULATED DOOR
121/1	D	3'x7'	4	15/A10	5/A10	9/A07	10/A09	
121/2	D	3'x7'	3	8/A10	6/A10 SIM	6/A10 SIM	16A/A10	
122/1	A	1'-6"x7'	1	4/A10	4/A10	4/A10 SIM	---	PAIR

FINISH SCHEDULE

MARK	ROOM TITLE	FINISHES							REMARKS
				WALLS					
ROOM NUMBER		FLOOR	BASE	NORTH	WEST	SOUTH	EAST	CEILING	CEILING HEIGHT	
101	VESTIBULE	I	4	B/F	B/F	B/F	B	2	8'-4"	SEE NOTE 4
102	WAITING	B	1	----	----	B/F	B	1	8'-0"	
103	RECEPTION	B	1	----	B	B	B/F	1/2	VARIES	SEE NOTE 5
104	MIC OFFICE	B/D	1	B	B	B	B	1	8'-0"	SEE NOTE 4
105	FILE/COPY	B	1	B	B	B	B	1	8'-0"	
106	CORRIDOR	B	1	B	B	B	B/F	1	8'-0"	
106A	CORRIDOR	B	1	----	B	----	B	2	7'-10"	
107	MULTI-PURPOSE	B/C	1	D/F	D	D	D	1/2	VARIES	SEE NOTE 4 & 5
108	READY ROOM	H	4	D	D	D	D	2	9'-2 1/2"	SEE NOTE 5, 6 & 7
109	OPERATIONS	A/F	1	E	E	B/F	B	1	9'-0"	SEE NOTE 2
110	WOMEN	G	3	A/B	B	A/B	A/B	1/3	8'-0"	SEE NOTE 1 & 5
111	JAN CLOSET	F	1	B	B	B	B	0	----	
112	MEN	G	3	A/B	A/B	A/B	B	1/3	8'-0"	SEE NOTE 1 & 5
113	NWR	B	1	E	E	E	E	1	8'-0"	
114	EQUIPMENT	A/F	1	B	B	B	B	1	9'-0"	SEE NOTE 2
115	COMM RM	A/F	1	C	C	C	C	0	----	SEE NOTE 2
116	NOT USED									
117	ELECTRICAL	F	1	B	B	B	B	0	----	
118	GENERATOR	F	1	B	B	B	B	3	VARIES	
119	ELEC TECH	E	1	B	B	B	B	1	9'-0"	SEE NOTE 5 & 6
120	STORAGE	F	1	B	B	B	B	0	----	SEE NOTE 6
120A	STORAGE	F	1	B	B	B	B	3	VARIES	
121	SERV VEST	I	4	B	B/F	B	F	2	9'-4"	SEE NOTE 4
122	COATS	B	1	B	B	B	B	3	8'-0"	
----	MECHANICAL SPACE	F	0	B	B	B	B	0	----	SEE NOTE 7

DOOR SCHEDULE NOTES

1. ALL DOORS TO BE 1 3/4" THICK UNLESS NOTED OTHERWISE.
2. REFER TO SPECS FOR HARDWARE SCHEDULE.

GLASS SCHEDULE

② 1/4" CLEAR TEMPERED GLASS
④ 1" CLEAR TEMPERED INSULATING GLASS

REMARKS

NOTE 1. WALLS NOTED TO RECEIVE BOTH "A" & "B" WALL FINISHES SHALL HAVE A CERAMIC TILE WAINSCOT 17 COURSE HIGH PLUS A BULLNOSE CAP.

NOTE 2. PROVIDE CONCRETE SEALER BELOW ALL ACCESS FLOORS INCLUDING PERIMETER CONCRETE WALLS.

NOTE 3. SEE REFLECTED CEILING PLAN FOR WALLS WHICH EXTEND TO BOTTOM OF DECK ABOVE.

NOTE 4. SEE CARPET FLOOR PLAN IN SPECIFICATION.

NOTE 5. SEE REFLECTED CEILING PLAN FOR DETAILED VARIATIONS IN CEILING HEIGHTS.

NOTE 6. WALL FINISHES AT ALCOVES TO BE SAME AS ADJACENT WALL.

NOTE 7. MECHANICAL SPACE LOCATED ABOVE READY ROOM 108.

FINISH KEY

FLOOR		BASE		WALLS		CEILING	
A	PLASTIC LAM*	0	NO BASE	A	CERAMIC TILE FIELD & ACCENT	0	EXPOSED STRUCTURE PAINTED
B	CARPET – FIELD	1	RUBBER – 4"	B	GYP BD PTD	1	2x2 ACCOUSTICAL CEILING PANEL
C	CARPET ACCENT #1	2	NOT USED	C	PAINTED PLYWOOD	2	GYP BD W/ SKIM COAT PTD
D	CARPET ACCENT #2	3	CERAMIC TILE #1	D	VINYL WALL COVERING	3	GYP BD – PAINTED
E	VINYL COMP TILE	4	CER PAVER TILE #2	E	ACST FABRIC		
F	SEALED CONC			F	GLASS AND METAL FRAME		
G	CER FLOOR TILE #1						
H	CER PAVER TILE #2						
I	"H" BORDER W/ RECESSED ENTRY MAT						

REFER TO SPEC ATTACHMENT FOR COLORS AND PAINT SCHEDULES.
* PLASTIC LAMINATE TO BE BY ACCESS FLOOR MANUFACTURER

NO.	DATE	PREPARED BY	CHECKED BY	PD APPROVED	ACTR./COTR. APPROVED	DESCRIPTION OF REVISION
1	5/12/95	CCT	MCK/MRD	BLR/TLS	FOR/JTS	REVISED PER AS-BUILT CONDITIONS

WFO / NEXRAD PROGRAM
PROJECT NO. GH01

PROGRAM MANAGEMENT SERVICES CONTRACTOR
FLUOR DANIEL GOULD EVANS ARCHITECTS, P.A.
KANSAS CITY, MO. U.S.A.

DRWN. C. WEYFORTH
CHECKED MCK
SUPV. ENGR. M. DEATON
ENGR/PROJ. MGR. BLR/TLS
ACOTR./COTR. FOR/JTS

SPECIAL ENGINEERING PROGRAM OFFICE (SEPO)
WEATHER FORECAST OFFICE
MOBILE, ALABAMA

SCHEDULES

044131–	SIZE 5	DWG. NO. A10	CLIN. GH	REV. 1

FDSP0004 05/09/95 11:00 CCT 3/2=1' KGH4101

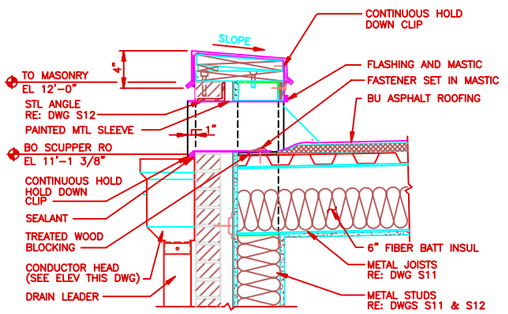

SCUPPER

DETAIL 1 — SCALE: 1 1/2"=1'-0"

NOTES: SEE STRUCTURAL DWGS FOR TYPICAL JOIST ATTACHMENT DETAILS SEE DETAIL 2 FOR ADDITIONAL NOTES

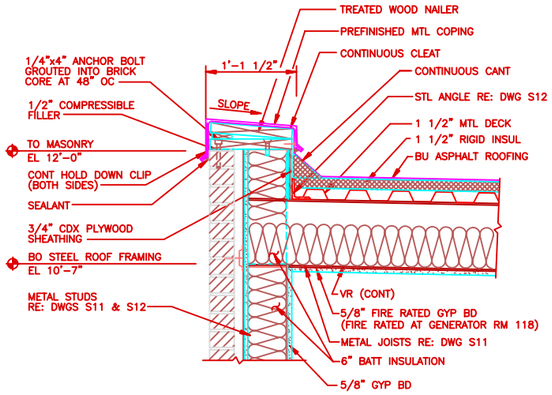

DETAIL 2 — SCALE: 1 1/2"=1'-0"

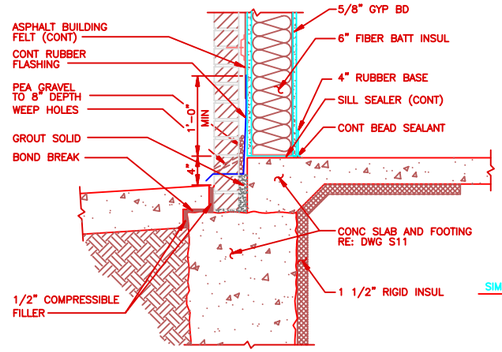

DETAIL 3 — SCALE: 1 1/2"=1'-0"

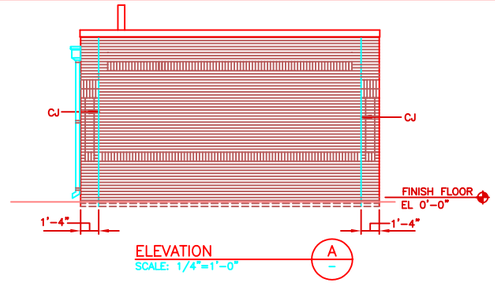

ELEVATION A — SCALE: 1/4"=1'-0"

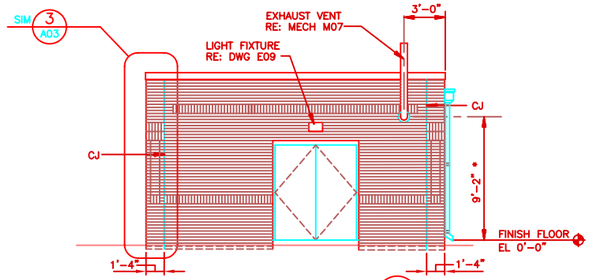

ELEVATION B — SCALE: 1/4"=1'-0"

* NOTE: COORDINATE DIMENSIONS WITH GFE MANUFACTURER'S INSTALLATION DRAWINGS.

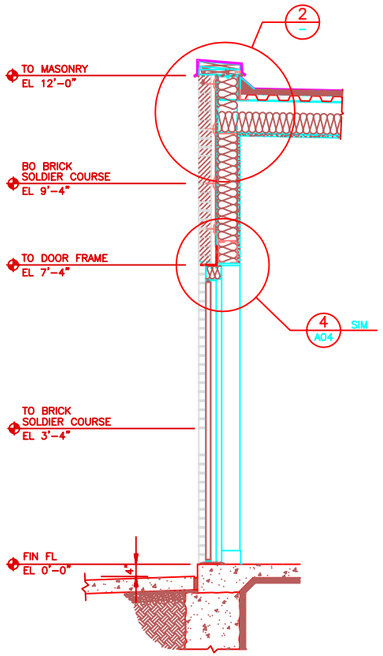

SECTION E — SCALE: 3/4"=1'-0"

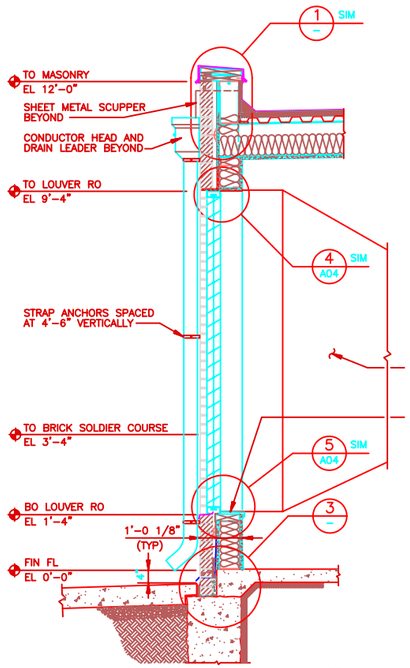

SECTION F — SCALE: 3/4"=1'-0"

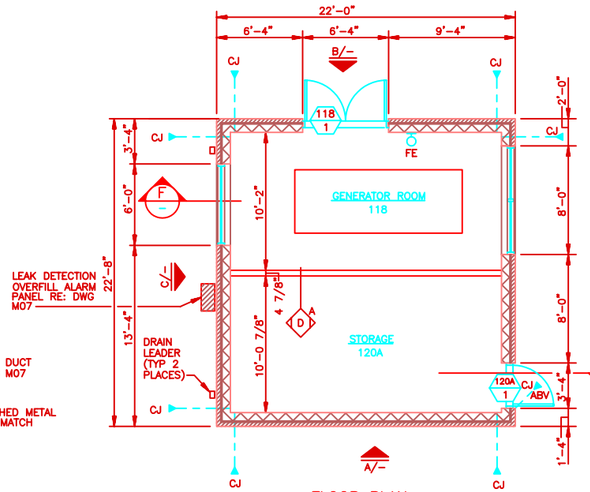

FLOOR PLAN — SCALE: 1/4"=1'-0"

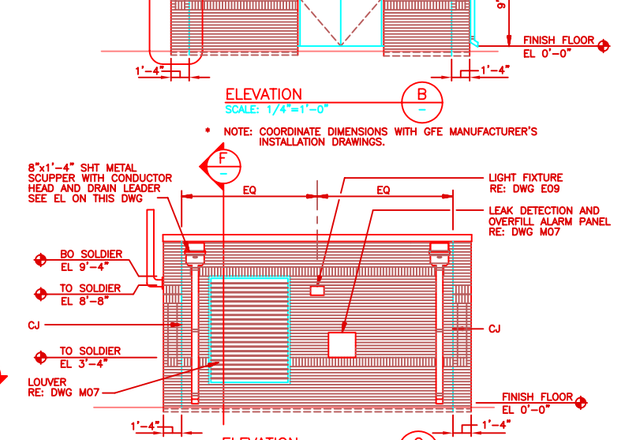

ELEVATION C — SCALE: 1/4"=1'-0"

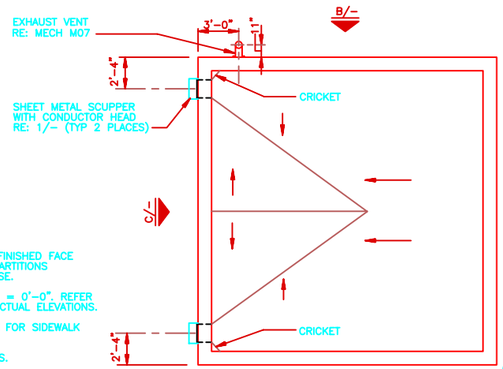

ROOF PLAN — SCALE: 1/4"=1'-0"

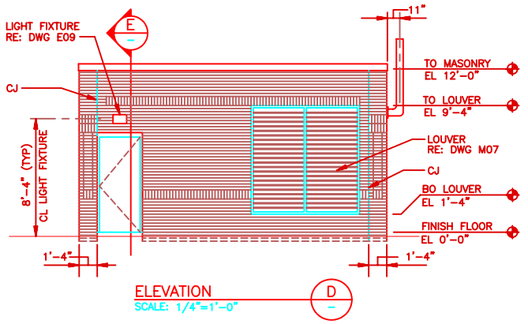

ELEVATION D — SCALE: 1/4"=1'-0"

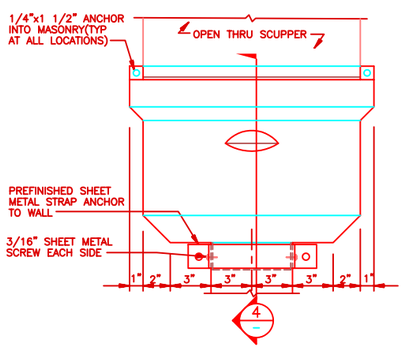

TYP ELEVATION OF CONDUCTOR HEAD — SCALE: 3"=1'-0"

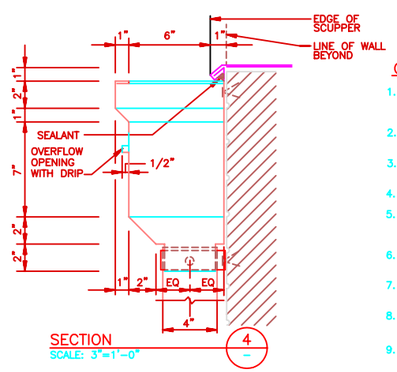

SECTION 4 — SCALE: 3"=1'-0"

GENERAL NOTES

1. DIMENSIONS ARE FROM FINISHED FACE TO FINISHED FACE OF PARTITIONS UNLESS NOTED OTHERWISE.
2. FINISH FLOOR ELEVATION = 0'-0". REFER TO DRAWING C03 FOR ACTUAL ELEVATIONS.
3. REFER TO DRAWING C03 FOR SIDEWALK LOCATIONS.
4. DO NOT SCALE DRAWINGS.
5. PROVIDE CONTINUOUS VAPOR RETARDER AT ALL EXTERIOR WALLS. SEAL AT ALL EDGES AND PENETRATIONS.
6. REFER TO ELEVATIONS FOR CONTROL JOINT LOCATIONS.
7. SEE DRAWING A05 FOR TYPICAL EXTERIOR WALL CONSTRUCTION.
8. REFER TO DRAWING C04 EQUIPMENT PAD PLAN FOR BUILDING ORIENTATION.
9. REFER TO DRAWING A03 FOR BRICK SCHEDULE, MATCH WFO ELEVATIONS.

0 3" 6" 1'-0" SCALE: 3"=1'-0"

0 2' 4' 8' 12' SCALE: 1/4"=1'-0"

0 1' 2' 3' 4' SCALE: 3/4"=1'-0"

0 6" 1' 2' SCALE: 1 1/2"=1'-0"

NO.	DATE	PREPARED BY	CHECKED BY	APPROVED	DESCRIPTION OF REVISION
1	5/12/95	CCT	MCK/MRD	BLR/TLS	FOR/JTS REVISED PER AS-BUILT CONDITIONS

WFO / NEXRAD PROGRAM
PROJECT NO. GH01

FLUOR DANIEL
GOULD EVANS ARCHITECTS, P.A.
KANSAS CITY, MO. U.S.A.

SPECIAL ENGINEERING PROGRAM OFFICE (SEPO)

WEATHER FORECAST OFFICE
MOBILE, ALABAMA

DDG/STORAGE BUILDING
PLAN/ELEVATIONS & DETAILS

DRAWN G. WEYFORTH
CHECKED MCK
SUPV. ENGR. M. DEATON
ENGR/PROJ. MGR. BLR/TLS
ACCPT/CONTR. FOR/JTS

044131– | 5 | A11 | GH | 1

FDSP0004 05/09/95 11:01 CCT 1/4=1' KCDHA111

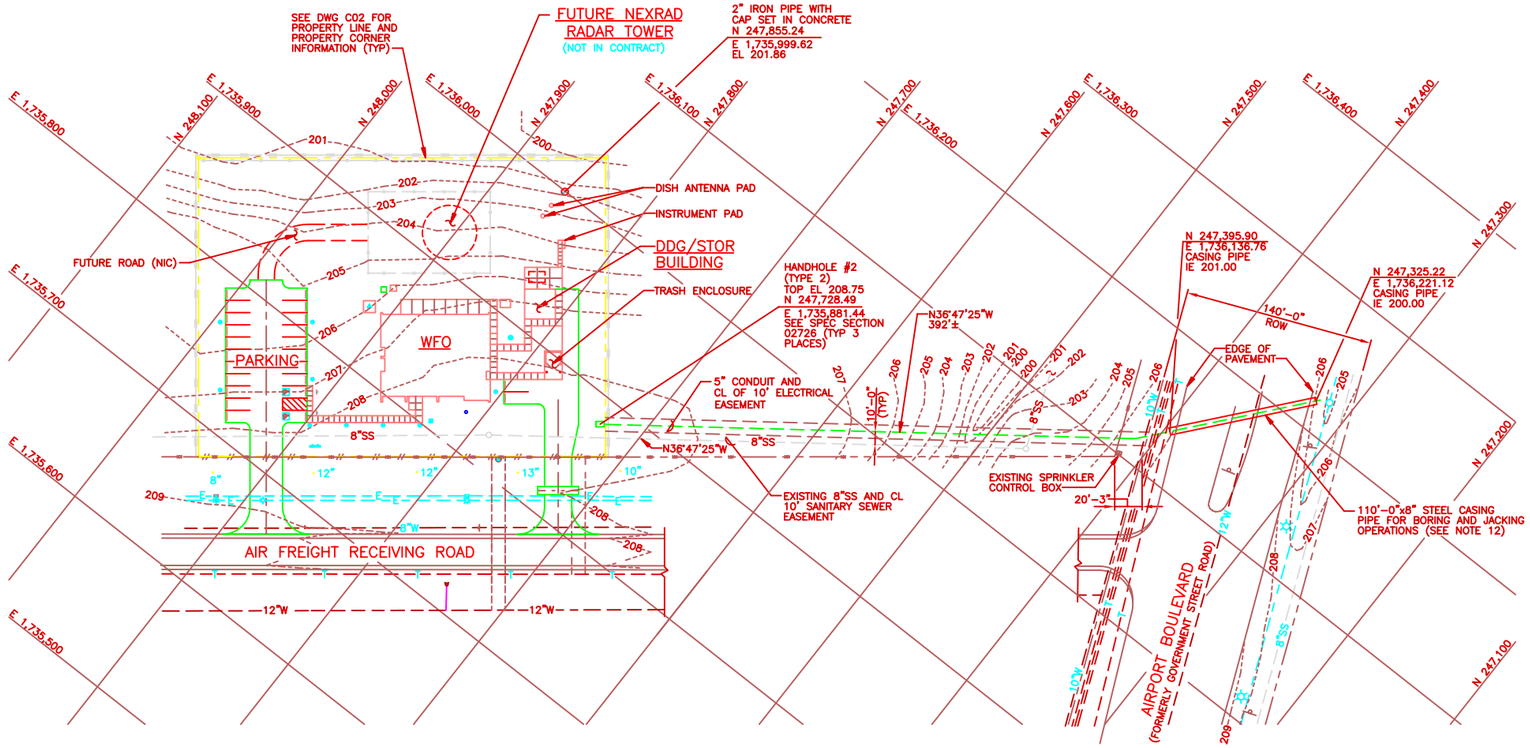

OVERALL SITE PLAN
SCALE: 1"=40'

GRID NORTH

BUILDING NORTH

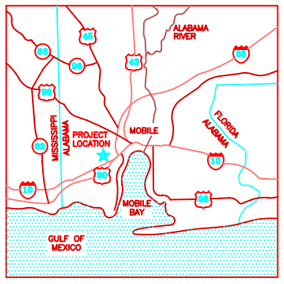

VICINITY MAP
SCALE: NONE

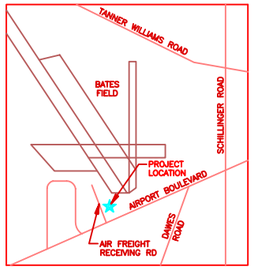

LOCATION MAP
SCALE: NONE

0 20' 40' 80' 120'
SCALE: 1"=40'

NOTES

1. FOR DRAWING INDEX AND ABBREVIATIONS SEE DWG I01. FOR LEGEND SEE DWG C02.
2. THE CONTRACTOR SHALL VERIFY ALL EXISTING CONDITIONS PRIOR TO CONSTRUCTION AND REPORT ANY DISCREPANCIES WITH THE DRAWINGS TO THE CONTRACT ADMINISTRATOR FOR RESOLUTION.
3. EXISTING UTILITY INFORMATION SHOWN IS APPROXIMATE, FIELD VERIFY PRIOR TO CONSTRUCTION.
4. CONTRACTOR'S ACCESS TO THE PROPERTY SHALL BE BY WAY OF AIR FREIGHT RECEIVING ROAD ONLY.
5. PERMANENT MONUMENT COORDINATE VALUES AND BEARING SHOWN ARE BASED ON THE ALABAMA STATE PLANE COORDINATE SYSTEM, WEST ZONE (NAD 83). OTHER COORDINATE VALUES ARE SITE COORDINATES (DO NOT HAVE GRID FACTOR ADJUSTMENT). ALL DISTANCES SHOWN ARE GROUND DISTANCES.
6. ELEVATIONS SHOWN ARE BASED ON CITY OF MOBILE BENCHMARK #150, A BRASS DISK IN CONCRETE MONUMENT ON THE SOUTH SIDE OF AIRPORT BOULEVARD AT LIGHT POLE #414 ELEV= 210.15 N.G.V.D.. ELEVATIONS SHOWN ARE BASED ON MEAN SEA LEVEL.
7. CONTRACTOR'S PARKING AND LAYDOWN AREAS SHALL BE LIMITED TO THE AREA BOUNDED BY THE PROPERTY LINE SHOWN ON THIS DRAWING.
8. THE CONTRACTOR SHALL BE RESPONSIBLE FOR MAINTAINING THE EXISTING STORM DRAINAGE SYSTEM OR INSTALLATION OF AN ADEQUATE TEMPORARY SYSTEM UNTIL THE NEW FACILITY HAS BEEN CONSTRUCTED.
9. UNLESS OTHERWISE SHOWN, ALL DIMENSIONS OFF STRUCTURES SHALL BE MEASURED FROM THE FACE OF THE FOUNDATION.
10. EXISTING UTILITY AND TOPOGRAPHIC INFORMATION IS BASED ON A FIELD SURVEY DATED JULY 1, 1992 REVISED JULY 20, 1992 AND OCTOBER 22, 1992 BY ROWE SURVEYING AND ENGINEERING COMPANY INC..
11. PRIOR TO CONSTRUCTION THE CONTRACTOR SHALL VERIFY THAT THE SITE MONUMENT AND PROPERTY CORNERS ARE LOCATED AS SHOWN ON THE DRAWINGS AND HAVE NOT BEEN DISTURBED. IF ANY DISCREPANCIES ARE FOUND NOTIFY THE CONTRACT ADMINISTRATOR FOR RESOLUTION.
12. CONDUIT OR PIPE SHALL BE INSTALLED UNDER AIRPORT BOULEVARD USING BORING/JACKING TECHNIQUES. AIRPORT BOULEVARD SHALL REMAIN IN CONTINUOUS SERVICE DURING ALL BORING/JACKING OPERATIONS. CASING PIPE SHALL HAVE A MINIMUM OF 5'-0" OF COVER. CONTRACTOR SHALL LOCATE EXISTING UTILITIES AND VERIFY THAT THEY WILL NOT INTERFERE WITH BORING AND JACKING OPERATIONS.

NO.	DATE	PREPARED BY	CHECKED BY	APPROVED	ACOE/COTR APPROVED	DESCRIPTION OF REVISION
1	5/12/95	CCT	BB/DGL	BLR/TLS	FGR/JTS	REVISED PER AS-BUILT CONDITIONS

WFO / NEXRAD PROGRAM
PROJECT NO. GH01

PROGRAM MANAGEMENT SERVICES CONTRACTOR
FLUOR DANIEL
GOULD EVANS ARCHITECTS, P.A.
KANSAS CITY, MO.
U.S.A.

DRAWN: M. POLK
CHECKED: B. BUZICK
SUPV. ENGR.: D. LOHE
ENGR/PROJ. MGR.: BLR/TLS
ADOTR./COTR.: FGR/JTS

SPECIAL ENGINEERING PROGRAM OFFICE (SEPO)
WEATHER FORECAST OFFICE
MOBILE, ALABAMA
OVERALL SITE PLAN

044131-	SIZE 5	DWG. NO. C01	CLIN. GH	REV. 1

FDSP0004 05/09/95 11:09 CCT 1=40' KODHC011

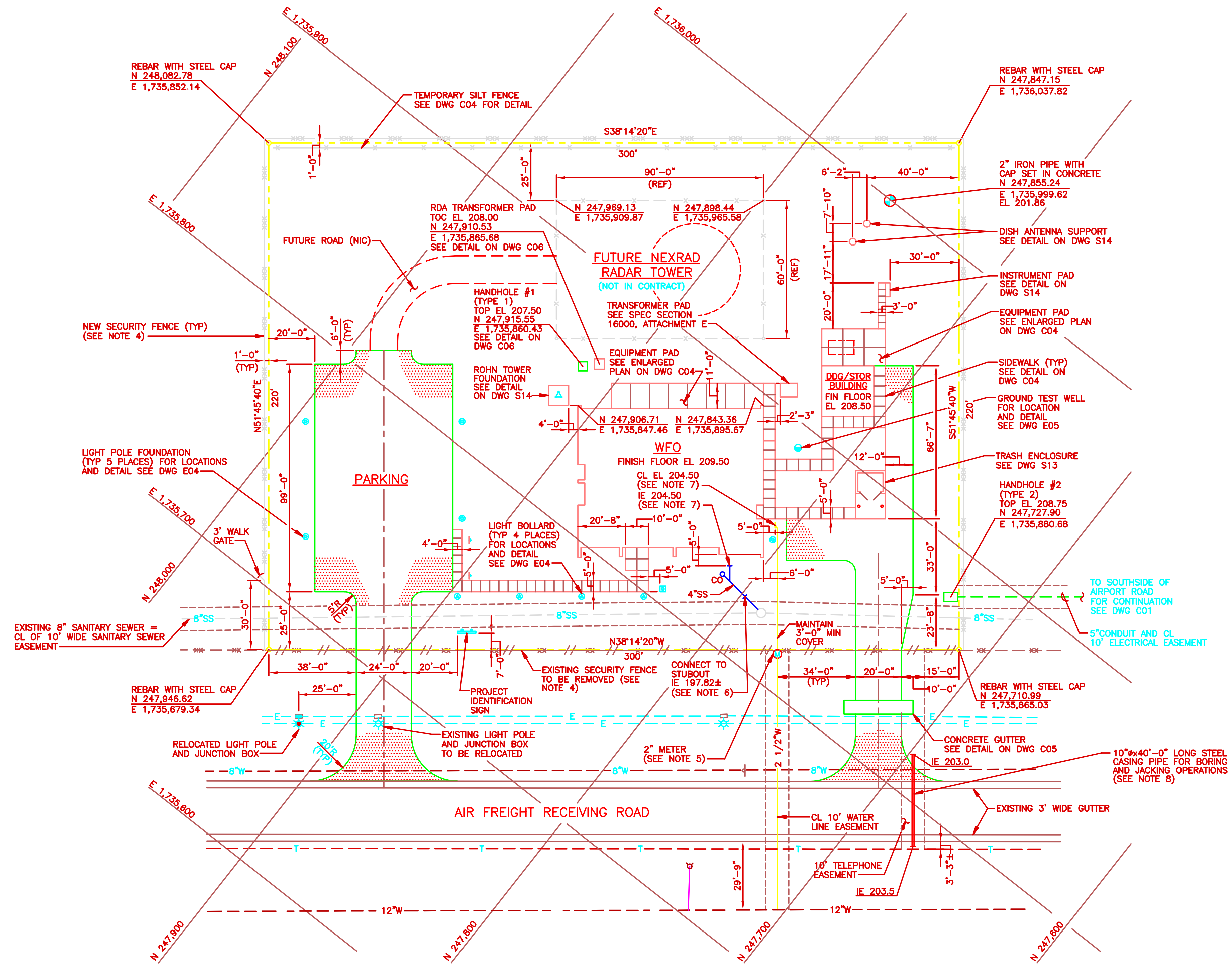

SITE AND UTILITIES PLAN
SCALE: 1"=20'

NOTES

1. FOR DRAWING INDEX AND ABBREVIATIONS SEE DWG I01.
2. EXISTING UTILITY INFORMATION SHOWN IS APPROXIMATE, FIELD VERIFY PRIOR TO USE.
3. PRIOR TO CONSTRUCTION THE CONTRACTOR SHALL VERIFY THAT THE SITE MONUMENT AND PROPERTY CORNERS ARE LOCATED AS SHOWN ON THE DRAWINGS AND HAVE NOT BEEN DISTURBED. IF ANY DISCREPANCIES ARE FOUND NOTIFY THE CONTRACT ADMINISTRATOR FOR RESOLUTION.
4. THE AIRPORT PROPERTY SHALL REMAIN SECURED AT ALL TIMES. NEW FENCING AND/OR OTHER SECURITY MEASURES, APPROVED BY THE AIRPORT, SHALL BE IN PLACE PRIOR TO REMOVAL OF THE EXISTING FENCE. THE CONTRACTOR SHALL COORDINATE THE INSTALLATION OF THE FENCE WITH THE AIRPORT.
5. THE TAP, 2 1/2" LINE FROM THE MAIN TO THE METER, METER AND THE METER BOX WILL BE PROVIDED AND INSTALLED BY THE BOARD OF WATER AND SEWER COMMISIONERS. THE CONTRACTOR SHALL COORDINATE WITH THE BOARD TO OBTAIN WATER SERVICE. THE CONTRACTOR SHALL OBTAIN ALL PERMITS AND PAY ANY FEES REQUIRED TO ESTABLISH WATER SERVICE.
6. THE CONTRACTOR SHALL COORDINATE THE CONNECTION OF THE SANITARY SEWER WITH THE BOARD OF WATER AND SEWER COMMISIONERS. THE BOARD WILL PROVIDE A STUBOUT FROM THE EXISTING MANHOLE. THE CONTRACTOR SHALL OBTAIN ALL PERMITS AND PAY ANY FEES REQUIRED TO CONNECT THE SANITARY SEWER.
7. SEE DWG M01 FOR CONNECTION TO BUILDING PIPING. CAP ALL PIPES UNTIL CONNECTIONS ARE MADE.
8. CONDUIT SHALL BE INSTALLED UNDER THE AIR FREIGHT RECEIVING ROAD BY BORING AND JACKING TECHNIQUES. THE ROAD SHALL REMAIN IN CONTINUOUS SERVICE DURING ALL BORING AND JACKING PROCEDURES. THE CONTRACTOR SHALL LOCATE EXISTING UTILITIES AND ADJUST CASING INVERTS AS NECESSARY TO AVOID INTERFERENCE. SEE DRAWING E04 FOR CONDUITS REQUIREMENTS.

UTILITY DESIGNATION

2 1/2"W
- SERVICE IDENTIFICATION
- LINE SIZE

LEGEND

Symbol	Description
	LEASE LINE / RIGHT OF WAY
	UTILITY EASEMENT
208	EXISTING GRADE CONTOUR
208	FINISH GRADE CONTOUR
xx	EXISTING FENCE
// xx //	EXISTING FENCE TO BE REMOVED
xxx	NEW FENCE
x	TEMPORARY SILT FENCE
x	FUTURE FENCE (NOT IN CONTRACT)
E	EXISTING UNDERGROUND POWER
T	EXISTING UNDERGROUND TELEPHONE
8"W	EXISTING WATER LINE
8"SS	EXISTING SANITARY SEWER
2 1/2"W	WATER LINE
4"SS	SANITARY SEWER
	EXISTING MANHOLE
	SLOPE
	DITCH OR SWALE
	RIDGE / VALLEY LINE
208.51	FINISH GRADE SPOT ELEVATION
M	WATER METER
	EXISTING POWER POLE
	EXISTING LIGHT POLE AND JUNCTION BOX
	RELOCATED LIGHT POLE AND JUNCTION BOX
	EXISTING SIGN
	LIGHT POLE
	FLAGPOLE
	LIGHT BOLLARD
	GROUND TEST WELL
	EXISTING FIRE HYDRANT
	PERMANENT MONUMENT
	3" ASPHALTIC CONCRETE PAVEMENT
	CONCRETE SURFACE
10"	EXISTING TREE WITH DIAMETER

0 10' 20' 40' 60'
SCALE: 1"=20'

NO.	DATE	PREPARED BY	CHECKED BY	FDI APPROVED	ACTR/COTR APPROVED	DESCRIPTION OF REVISION
1	5/12/95	CCT	BB/DGL	BLR/TLS	FGR/JTS	REVISED PER AS-BUILT CONDITIONS

WFO / NEXRAD PROGRAM
PROJECT NO. GH01

PROGRAM MANAGEMENT SERVICES CONTRACTOR
FLUOR DANIEL
GOULD EVANS ARCHITECTS, P.A.
KANSAS CITY, MO. U.S.A.

SEPO

DRAWN M POLK
CHECKED B. BUZICK
SUP'V. ENGR. D. LOHE
ENGR/PROJ. MGR. BLR/TLS
ACOTR./COTR. FGR/JTS

SPECIAL ENGINEERING PROGRAM OFFICE (SEPO)
WEATHER FORECAST OFFICE
MOBILE, ALABAMA
SITE AND UTILITIES PLAN

	SIZE	DWG. NO.	CLIN.	REV.
044131–	5	C02	GH	1

FDSP0004 05/09/95 11:10 CCT 1=20' KCGHC021

NOTES

1. FOR DRAWING INDEX AND ABBREVIATIONS SEE DWG I01. FOR LEGEND SEE DWG C02.
2. FINISHED SLOPES SHALL BE 3:1 OR FLATTER UNLESS NOTED OTHERWISE.

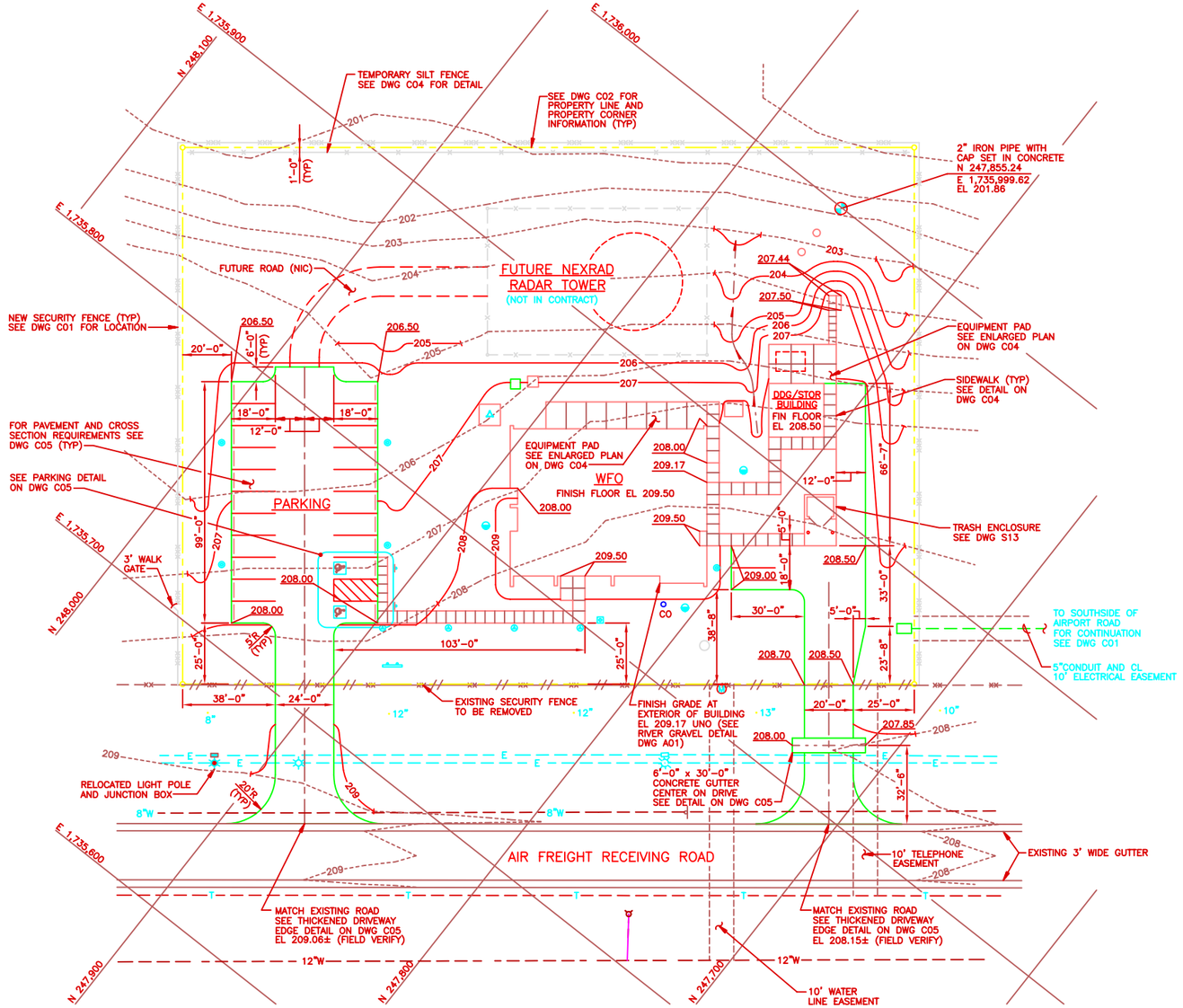

FINISH GRADING PLAN
SCALE: 1"=20'

GRID NORTH

BUILDING NORTH

0 10' 20' 40' 60'
SCALE: 1"=20'

NO.	DATE	PREPARED BY	CHECKED BY	AS APPROVED	ACTG./CORR. APPROVED	DESCRIPTION OF REVISION
1	5/12/95	CCT	BB/DGL	BLR/TLS	FOR/JTS	REVISED PER AS-BUILT CONDITIONS

WFO / NEXRAD PROGRAM
PROJECT NO. GH01

PROGRAM MANAGEMENT SERVICES CONTRACTOR
FLUOR DANIEL GOULD EVANS ARCHITECTS, P.A.
KANSAS CITY, MO. U.S.A.

SEPO

DRAWN: M. POLK
CHECKED: B. BUZICK
SUPV. ENGR.: D. LOHE
ENVR./PROJ. MGR.: BLR/TLS
ACCPT./CORR. APPROVED: FOR/JTS

SPECIAL ENGINEERING PROGRAM OFFICE (SEPO)

WEATHER FORECAST OFFICE
MOBILE, ALABAMA

FINISH GRADING PLAN

044131-	SIZE: 5	DWG. NO.: C03	CUST.: GH	REV.: 1

FDSP0004 05/09/95 11:10 CCT 1=20' KGHK031

NOTES

1. FOR DRAWING INDEX AND ABBREVIATIONS SEE DWG I01. FOR LEGEND SEE DWG C02
2. FOR EQUIPMENT ARRANGEMENT SEE DWG M03 AND M08
3. THE CONTRACTOR SHALL PROVIDE CONTROL JOINTS IN SIDEWALKS AT EQUALLY SPACED INTERVALS, NOT TO EXCEED SIDEWALK WIDTH. CONTROL JOINT DEPTH SHALL BE 1/4 TO 1/3 THE THICKNESS OF THE SIDEWALK AND FORMED BY A BUTTERFLY TOOL (R=1/8"). ISOLATION JOINTS CONFORMING TO DETAIL 2 ON THIS DRAWING SHALL BE PROVIDED WHERE SIDEWALKS ABUT FOUNDATION WALLS, CONCRETE PADS OR CONCRETE PAVEMENT. EXPOSED EDGES OF THE SIDEWALK SHALL BE TOOLED.

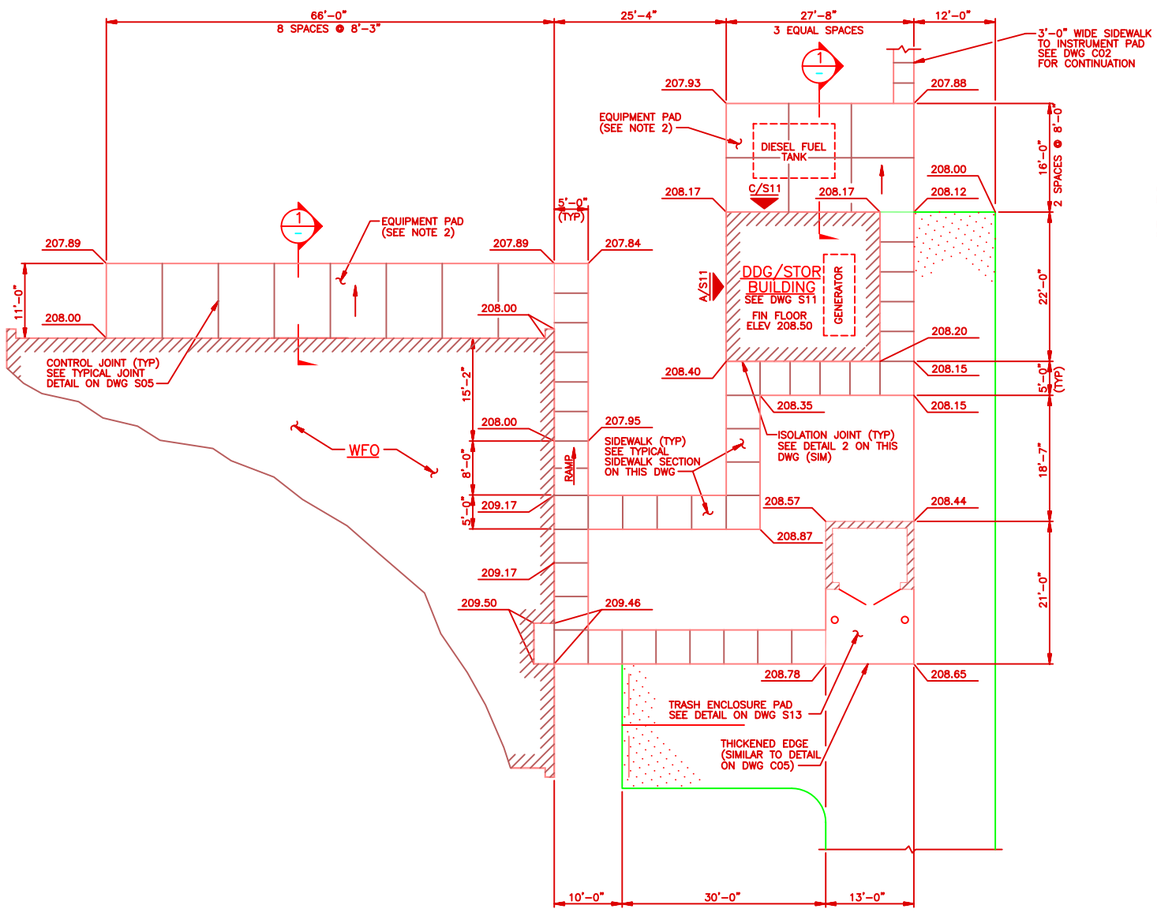

ENLARGED PLAN
SCALE: 1/8"=1'-0"
(SEE DWG C02 FOR LOCATION)

GRID NORTH

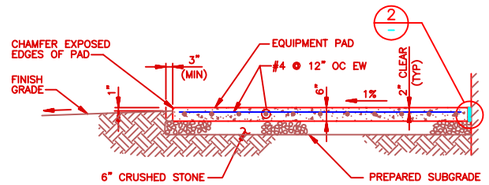

SECTION 1
SCALE: NONE

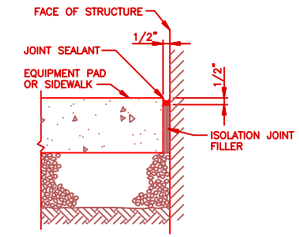

ISOLATION JOINT

DETAIL 2
SCALE: NONE

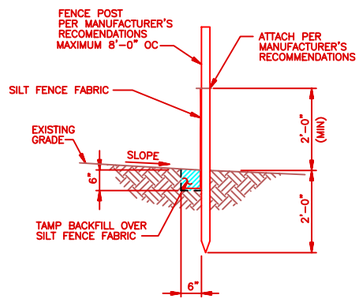

SILT FENCE DETAIL
SCALE: NONE
(SEE DWG C03 FOR LIMITS OF FENCING)

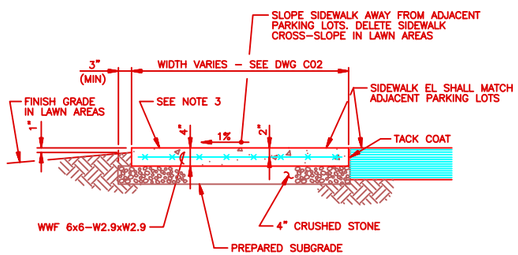

TYPICAL SIDEWALK SECTION
SCALE: NONE

0 4' 8' 16' 24'
SCALE: 1/8"=1'-0"

NO.	DATE	PREPARED BY	CHECKED BY	PIC APPROVED	ACTR/CCOR APPROVED	DESCRIPTION OF REVISION
1	5/12/95	CCT	BB/DGL	BLR/TLS	FGR/JTS	REVISED PER AS-BUILT CONDITIONS

WFO / NEXRAD PROGRAM
PROJECT NO. GH01

SPECIAL ENGINEERING PROGRAM OFFICE (SEPO)

WEATHER FORECAST OFFICE
MOBILE, ALABAMA

SECTIONS AND DETAILS
SHEET 1 OF 3

DRAWN: M POLK
CHECKED: B. BUZICK
SUP'V. ENGR: D. LOHE
ENGR/PROJ. MGR: BLR/TLS
ACOTR/CCOTR: FGR/JTS

FLUOR DANIEL
GOULD EVANS ARCHITECTS, P.A.
KANSAS CITY, MO. U.S.A.

SIZE	DWG. NO.	CLN.	REV.
5	C04	GH	1

044131–

FDSP0004 05/09/95 11:10 CCT 1/8=1' KCDHC041

NOTES

1. FOR DRAWING LIST AND ABBREVIATIONS SEE DWG I01. FOR LEGEND SEE DWG C02.
2. ACCESSIBLE PARKING SIGN AND PAVEMENT SYMBOL SHALL CONFORM TO ANSI 117.1.
3. ACCESSIBLE PARKING PAVEMENT SYMBOL SHALL CONFORM TO ANSI 117.1.

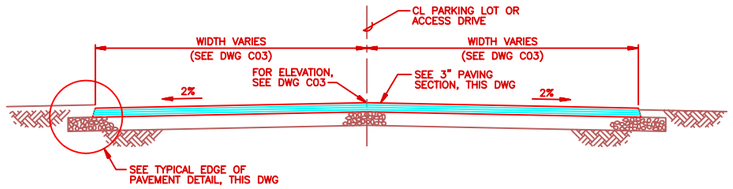

TYPICAL ACCESS DRIVE/PARKING LOT SECTION
SCALE: NONE

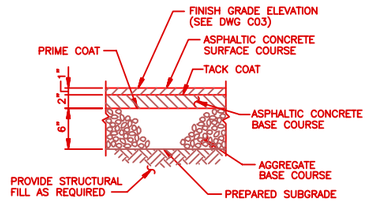

3" ASPHALTIC CONCRETE PAVING SECTION
SCALE: NONE
(SEE DWG C03 FOR PAVING LIMITS)

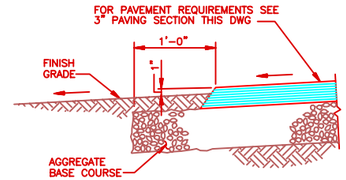

TYPICAL EDGE OF PAVEMENT
SCALE: NONE

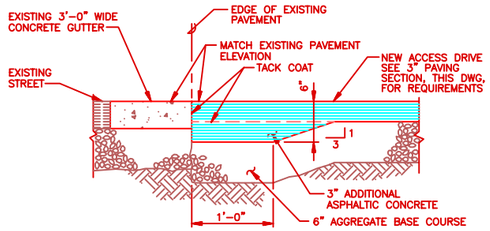

THICKENED DRIVEWAY EDGE AT EXISTING STREET
SCALE: NONE
(SEE DWG C03 FOR LOCATION)

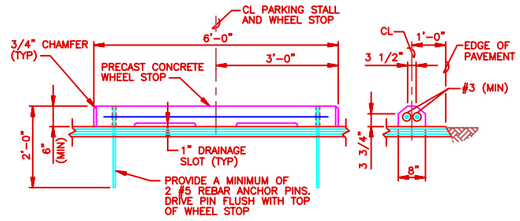

SIDE VIEW END VIEW

TYPICAL WHEEL STOP
SCALE: NONE

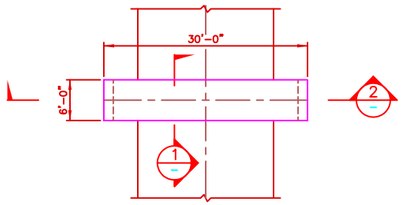

CONCRETE GUTTER PLAN
SCALE: 1/8"=1'-0"
(SEE DWG C03 FOR LOCATION)

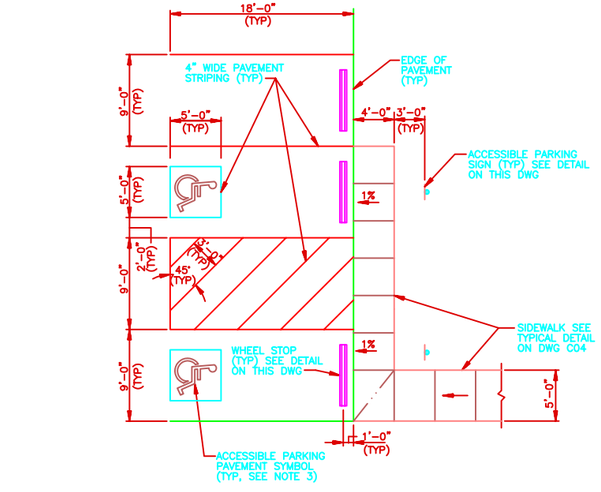

PLAN
PARKING DETAIL
SCALE: 3/16"=1'-0"
(SEE DWG C03 FOR LOCATION)

GRID NORTH

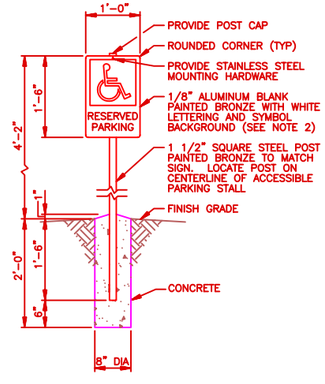

ACCESSIBLE PARKING SIGN
SCALE: NONE

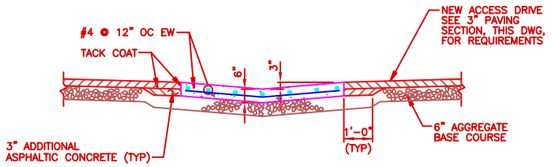

SECTION 1
SCALE: NONE

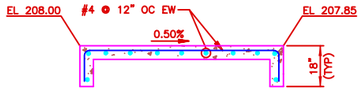

SECTION 2
SCALE: NONE

0 4' 8' 16' 24'
SCALE: 1/8"=1'-0"

0 4' 8' 12' 16'
SCALE: 3/16"=1'-0"

NO.	DATE	PREPARED BY	CHECKED BY	PIC APPROVED	ACTR/COTR APPROVED	DESCRIPTION OF REVISION
1	5/12/95	CCT	BB/DGL	BLR/TLS	FOR/JTS	REVISED PER AS-BUILT CONDITIONS

WFO / NEXRAD PROGRAM
PROJECT NO. GH01

PROGRAM MANAGEMENT SERVICES CONTRACTOR
FLUOR DANIEL GOULD EVANS ARCHITECTS, P.A.
KANSAS CITY, MO. U.S.A.

SEPO

DRAWN: M. POLK
CHECKED: B. BUZICK
SUP'V. ENGR.: D. LONE
ENGR/PROJ. MGR.: BLR/TLS
ACOTR/COTR: FOR/JTS

SPECIAL ENGINEERING PROGRAM OFFICE (SEPO)
WEATHER FORECAST OFFICE
MOBILE, ALABAMA
SECTIONS AND DETAILS
SHEET 2 OF 3

044131-	SIZE 5	DWG. NO. C05	CLIN. GH	REV. 1

FDSP0004 05/09/95 11:11 CCT J:\5=1 KGHK051

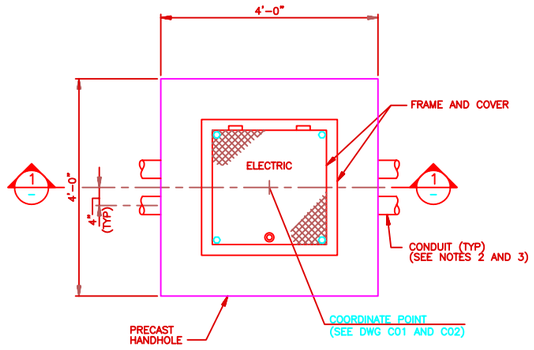

ELECTRICAL HANDHOLE – TYPE 1
SCALE: 1"=1'-0"
(SEE DWG C02 FOR LOCATIONS)

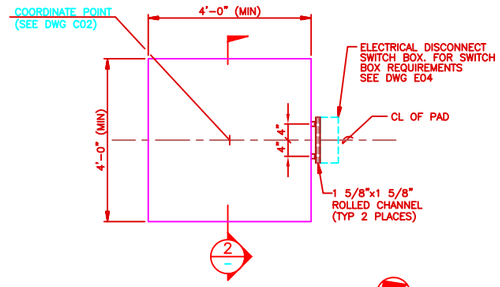

RDA TRANSFORMER PAD PLAN
SCALE: 3/4"=1'-0"
(SEE DWG C02 FOR LOCATION)

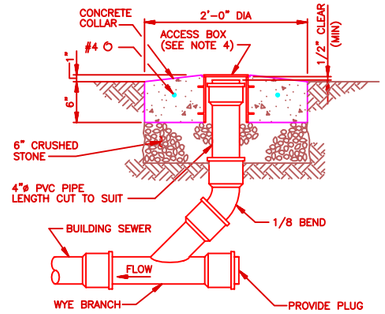

CLEANOUT DETAIL
SCALE: NONE
(SEE DWG C02 FOR LOCATIONS)

NOTES

1. FOR DRAWING INDEX AND ABBREVIATIONS SEE DWG I01. FOR LEGEND SEE DWG C02.
2. CONDUITS SHOWN ARE FOR REFERENCE PURPOSES ONLY. FOR REQUIRED SIZE, QUANTITY, AND ORIENTATION OF CONDUITS SEE DWG E04. CONDUIT PENETRATIONS SHALL BE SYMMETRICAL ABOUT THE CENTERLINES OF THE HANDHOLES.
3. CONDUITS NOT USED SHALL BE PLUGGED WITH EXPANDABLE WATERTIGHT CONDUIT DUCT PLUG. CONDUITS WITH CONDUCTORS SHALL BE SEALED WATERTIGHT.
4. THE CONTRACTOR SHALL PROVIDE CLEANOUT WITH A CAST IRON ACCESS BOX. THE ACCESS BOX SHALL HAVE ANCHORING FLANGES AND A CAST IRON LID LABELED "CLEANOUT". THE CLEANOUT FERRULE SHALL NOT BE IN CONTACT WITH THE ACCESS BOX.

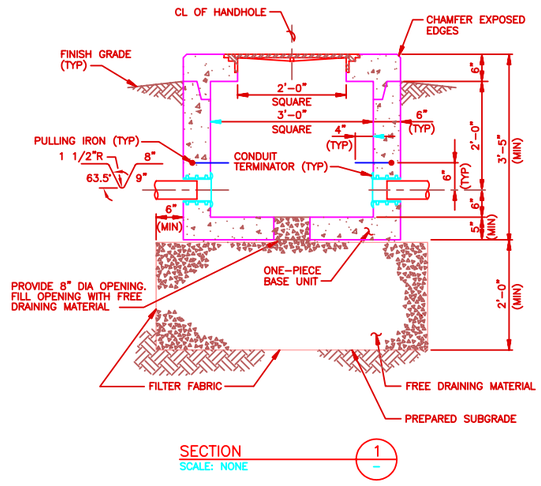

SECTION 1
SCALE: NONE

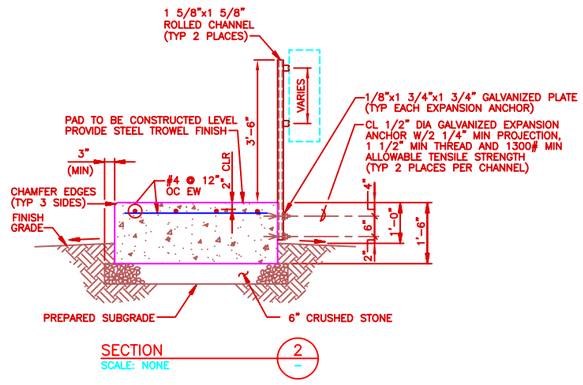

SECTION 2
SCALE: NONE

0 1' 2' 3' 4'
SCALE: 3/4"=1'-0"

0 6" 1' 2' 3'
SCALE: 1"=1'-0"

NO.	DATE	PREPARED BY	CHECKED BY	FSS APPROVED	ACTS/OTDS APPROVED	DESCRIPTION OF REVISION
1	5/12/95	CCT	BB/DDL	BLR/TLS	FOR/ATS	REVISED PER AS-BUILT CONDITIONS

WFO / NEXRAD PROGRAM
PROJECT NO. GH01

PROGRAM MANAGEMENT SERVICES CONTRACTOR
FLUOR DANIEL
GOULD EVANS ARCHITECTS, P.A.
KANSAS CITY, MO. U.S.A.

DRAWN M POLK
CHECKED B. BUZICK
SUPV. ENGR. D. LONE
ENGR/PROJ. MGR. BLR/TLS
ACOTS/OTDS FOR/ATS

SPECIAL ENGINEERING PROGRAM OFFICE (SEPO)
WEATHER FORECAST OFFICE
MOBILE, ALABAMA
SECTIONS AND DETAILS
SHEET 3 OF 3

044131–	SIZE 5	DWG. NO. C06	CLIN. GH	REV. 1

FDSP0004 05/09/95 11:11 CCT 1/2=1' KCGHC061

LEGEND ONE-LINE/SCHEMATIC DIAGRAMS

- 30A 3P — SAFETY SWITCH, 3 POLE, RATING AS NOTED
- 225 AT 3P — CIRCUIT BREAKER, 3 POLE, TRIP RATING AS NOTED
- TRANSFORMER
- CONTACT
- FUSE
- (C) COIL
- CURRENT TRANSFORMER
- AUTOMATIC TRANSFER SWITCH
- (G) GENERATOR
- (M) UTILITY METERING
- GROUND
- (20) INDUCTION MOTOR (NUMBER INDICATES HORSEPOWER)
- ELECTRICAL EQUIPMENT ENCLOSURE
- BUILDING LINE

CIRCUIT DESIGNATION

PPA -4, 3#10, 1#12G, 3/4"C

- PPA — PANEL DESIGNATION
- 4 — CIRCUIT NUMBER
- 3#10 — NUMBER OF WIRES
- 1#12G — WIRE SIZE
- 3/4"C — CONDUIT SIZE

PANEL DESIGNATION

PPA

- A = 480/277 VOLT
- B = 208/120 VOLT
- C = 208/120 VOLT UPS
- PANEL
- L = LIGHTING
- P = POWER

LEGEND PLAN DRAWINGS

- FLUORESCENT LIGHTING FIXTURE
- FLUORESCENT LIGHTING FIXTURE EQUIPPED WITH BATTERY BACKUP
- FLUORESCENT STRIP FIXTURE
- EXIT LIGHT FIXTURE
- WALL MOUNTED LIGHT FIXTURE
- RECESSED/SURFACE MOUNTED LIGHT FIXTURE
- PHOTOCELL
- PARKING LOT LIGHTING FIXTURE
- $ SINGLE POLE WALL SWITCH
- $3 3 WAY WALL SWITCH
- $4 4 WAY WALL SWITCH
- $D DIMMER SWITCH
- PHASE CONDUCTORS / GND / NEUTRAL — CONDUIT CONCEALED IN WALLS, ABOVE CEILINGS, OR UNDER ACCESS FLOOR
- CONDUIT EMBEDDED IN CONCRETE OR BELOW GRADE
- FLEXIBLE METAL CONDUIT
- 3/4" FLEXIBLE METAL CONDUIT (UNO)
- GROUND TEST WELL
- GROUND ROD
- 250 KCMIL BARE COPPER GROUND WIRE (UNO)
- CONDUIT STUBBED OUT 3" PAST WALL UNDER ACCESS FLOOR AND TERMINATED WITH INSULATED BUSHING. BOTTOM OF CONDUIT SHALL BE 3" ABOVE SLAB.
- CONDUIT TURNING DOWN
- CONDUIT TURNING UP
- CONDUIT CAPPED
- DUPLEX GROUNDING RECEPTACLE
- DUPLEX GROUNDING RECEPTACLE, ABOVE COUNTER OR BACKSPLASH
- GFCI — DUPLEX GROUNDING RECEPTACLE, WITH GFCI
- GFCI — DUPLEX GROUNDING RECEPTACLE WITH GFCI, ABOVE COUNTER OR BACKSPLASH
- RECEPTACLE, 3ø, 4W, W/GND, CONFIGURATION AS NOTED
- (3) MOTOR (NUMBER INDICATES HORSEPOWER)
- 4" SQUARE (UNO) JUNCTION BOX WITH BLANK COVER. BRACKET INDICATES WALL MOUNT.
- COMMUNICATION OUTLET BOX AND COVER WITH 1/4" CENTERED HOLE, 12" AFF (UNO), 1" CONDUIT (UNO)
- SAME AS ABOVE EXCEPT FOR LAN SYSTEM
- 4-PLEX RECEPTACLE AND FLOOR BOX
- DUPLEX RECEPTACLE AND FLOOR BOX
- 30A, 3P SAFETY SWITCH, NON-FUSED, 600V RATED (UNO)
- STARTER
- COMBINATION STARTER (SIZE AS INDICATED)
- PANELBOARD SURFACE MOUNTED
- PANELBOARD FLUSH MOUNTED
- (SD) SMOKE DETECTOR (DUCT MOUNTED)
- CONNECTION POINT
- GROUNDING PLATE

FIXTURE SCHEDULE

TYPE	TYPE NO	DESCRIPTION
	F1	2'x4', 2-LAMP STATIC TROFFER, PRISMATIC ACRYLIC LENS
	F1A	SAME AS F1, EXCEPT 3-LAMP
	F1B	SAME AS F1, EXCEPT 3-LAMP, 2 BALLASTS
	F1C	SAME AS F1, EXCEPT 1'x4'
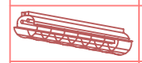	F2	4'-0", 2-LAMP STANDARD INDUSTRIAL FLUORESCENT FIXTURE WITH WIRE GUARD
	F3	1-LAMP, RECESSED, COMPACT FLUORESCENT DOWNLIGHT
	F3A	NOT USED
	F4	4'-0", 1-LAMP STRIP, STANDARD CHANNEL FLUORESCENT FIXTURE
	F4A	SAME AS F4, EXCEPT 2'-0" LONG
	F5	8'-0", 1-LAMP, OUTDOOR FLUORESCENT SIGN FIXTURE
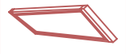	F6	4'-0", 3-LAMP, WIDE BODY, WRAPAROUND FLUORESCENT FIXTURE
	F6A	SAME AS F6 EXCEPT W/EMERGENCY BATTERY PACK
	F6B	4'-0", 2-LAMP, NARROW BODY, WRAPAROUND FLUORESCENT FIXTURE
	F7	2'-0", 1-LAMP, UNDERCABINET, LOW PROFILE, FLUORESCENT FIXTURE
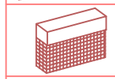	F8	OUTDOOR, BUILDING MOUNTED, VANDAL RESISTANT FIXTURE, 70W HIGH PRESSURE SODIUM LAMP
	F9	2'-0", 1-LAMP, WALL MOUNT FLUORESCENT FIXTURE
	F10	OUTDOOR PARKING LOT LIGHT FIXTURE, 150W HIGH PRESSURE SODIUM LAMP, 20'-0" SQUARE STRAIGHT STEEL POLE
	F11	OUTDOOR, RECESSED FIXTURE, 50W HIGH PRESSURE SODIUM LAMP
	F12	2'x4', 3-LAMP PARABOLIC TROFFER, 18 CELLS
	F12A	SAME AS F12, EXCEPT 1'x4', 2 LAMP, 6 CELLS
	F13	4'-0", 2-LAMP, STAGGERED STRIP, FLUORESCENT FIXTURE
	F13A	SAME AS F13, EXCEPT 2'-0"
	F14	EXIT SIGN (SINGLE FACE)
	F14A	EXIT SIGN (DOUBLE FACE)
	F15	1'x4', 2-LAMP PARABOLIC TROFFER, 9 CELLS
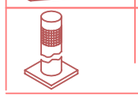	F16	WALKWAY, PAD MOUNTED, 70 WATT HIGH PRESSURE SODIUM LAMP

REFERENCE SPECIFICATION SECTION 16000 FOR COMPLETE DESCRIPTION

GENERAL ELECTRICAL NOTES

1. FOR DRAWING LIST AND ABBREVIATIONS, SEE DWG I01.

NO.	DATE	PREPARED BY	CHECKED BY	APPROVED	ACTR./CORR. APPROVED	DESCRIPTION OF REVISION
1	5/12/95	CCT	KPW/TMS	BLR/TLS	FOR/JTS	REVISED PER AS-BUILT CONDITIONS

WFO / NEXRAD PROGRAM
PROJECT NO. OH01

DRAWN WILDSCHUETZ
CHECKED WILDSCHUETZ
SUPV. ENGR. T.M. SUPER
ENGR./PROJ. MGR. BLR/TLS
ACCTR./CORR. FOR/JTS

SPECIAL ENGINEERING PROGRAM OFFICE (SEPO)

WEATHER FORECAST OFFICE
MOBILE, ALABAMA

LEGEND AND FIXTURE SCHEDULE

PROGRAM MANAGEMENT SERVICES CONTRACTOR
FLUOR DANIEL
GOULD EVANS ARCHITECTS, P.A.
KANSAS CITY, MO. U.S.A.

SEPO

044131- | SIZE 5 | DWG. NO. E01 | CLSN. GH | REV. 1

FDSP0004 05/09/95 12:45 CCT 12/1=1" KOAHE011

NOTES

1. SEE DWG E10, DETAIL 4 FOR BONDING DETAIL.
2. SEE DRAWING E03 FOR PANEL SCHEDULES.
3. UNIT FURNISHED WITH DISCONNECT SWITCH BY MANUFACTURER. POWER WIRING CONNECTIONS BY CONTRACTOR. SEE DWG M06 FOR EQUIPMENT SCHEDULE.
4. SEE DRAWING E09 FOR PANEL SCHEDULE.
5. PROVIDE LUGS FOR (5) #4/0 WIRES. WIRE TO BE INSTALLED IN THE FUTURE BY OTHERS.

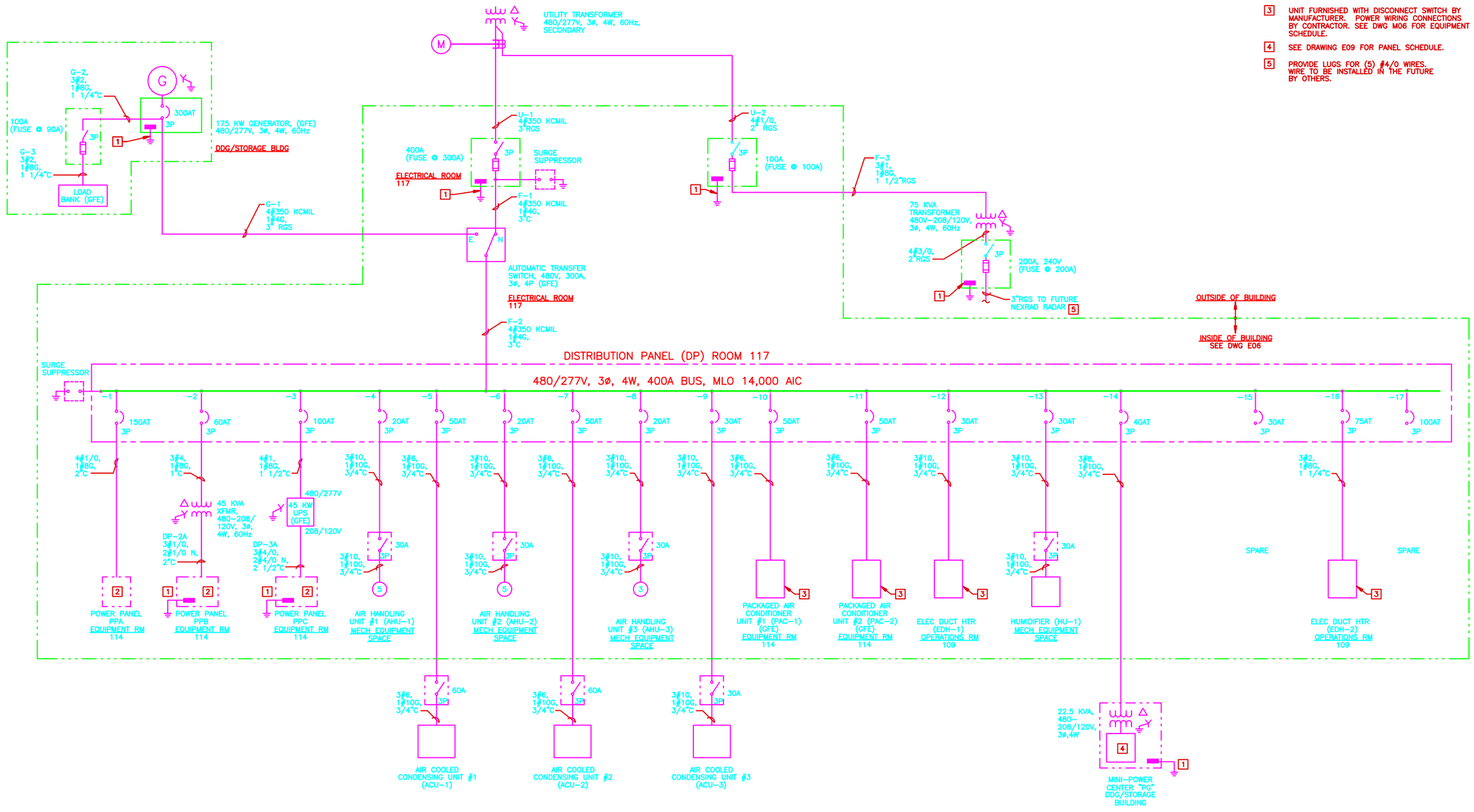

NO.	DATE	PREPARED BY	CHECKED BY	PIC APPROVED	ACOR/COER APPROVED	DESCRIPTION OF REVISION
1	5/12/95	CCT	KPW/TMS	BLR/TLS	FSR/JTS	REVISED PER AS-BUILT CONDITIONS

WFO / NEXRAD PROGRAM
PROJECT NO. GH01

PROGRAM MANAGEMENT SERVICES CONTRACTOR
FLUOR DANIEL GOULD EVANS ARCHITECTS, P.A.
KANSAS CITY, MO. U.S.A.

DWG'D WILDSCHUETZ
CHECKED WILDSCHUETZ
SUPV. ENGR. T.M. SUPER
ENGR/PROJ. MGR. BLR/TLS
ACOR./COER. FSR/JTS

SPECIAL ENGINEERING PROGRAM OFFICE (SEPO)

WEATHER FORECAST OFFICE
MOBILE, ALABAMA

ONE-LINE DIAGRAM

044131-	SIZE 5	DWG. NO. E02	CLIN. GH	REV. 1

FDS90004 05/10/95 08:37 CCT 12/1=1" KOPHE021

VOLTS 480/277V | PANEL "PPA" | MAINS 225A MLO
PHASE 3ø | LOCATION EQUIPMENT RM 114 | FEEDER DP-1
WIRE 4W , 14,000 AIC

DESCRIPTION	BKR	CKT	POLE		POLE	CKT	BKR	DESCRIPTION
ELEC DUCT HTR (EDH-3) NWR RM	20	1	L1	1	2			
				3	4	2	20	CONDENSER #1, (C-1)
				5	6			
ELEC DUCT HTR (EDH-4) CORRIDOR 106A	20	3	L2	7	8			
				9	10	4	20	CONDENSER #2, (C-2)
				11	12			
ELEC DUCT HTR (EDH-5) MULTI-PURPOSE RM	20	5	L3	13	14	6	20	EWH, STORAGE
				15	16	8	20	CUH-1, SERV VEST
				17	18	10	20	CUH-2, VEST
ELEC DUCT HTR (EDH-7) RECEPTION	20	7	L1	19	20	12	20	LTG, EXTERIOR
				21	22	14	20	LTG, INTERIOR NORTH
				23	24	16	20	LTG, INTERIOR CENTER
ELEC DUCT HTR (EDH-8) FILE/COPY RM	20	9	L2	25	26	18	20	LTG, INTERIOR SOUTH
				27	28	20	20	EDH-6, MIC
				29	30	22	20	SPARE
ELEC DUCT HTR (EDH-9) CORRIDOR 106	20	11	L3	31	32	24	20	LTG, DDG/STORAGE BUILDING
				33	34	26	20	SPARE
				35	36	28	20	SPARE
SPARE	20	13	L1	37	38	30	20	SPARE
SPARE	20	15	L2	39	40	32	20	SPARE
SPARE	20	17	L3	41	42	34	20	SPARE

VOLTS 208/120V | PANEL "PPB" | MAINS 150A MCB
PHASE 3ø | LOCATION EQUIPMENT RM 114 | FEEDER DP-2A
WIRE 4W , 10,000 AIC

DESCRIPTION	BKR	CKT	POLE		POLE	CKT	BKR	DESCRIPTION
RCPTS, EQUIP, OPER, OUTSIDE	20	1	L1	1	2	2	20	RCPTS, CUBICLE, OPER RM
RCPTS, OPER, OUTSIDE	20	3	L2	3	4	4	20	RCPTS, CUBICLE, OPER RM
RCPTS, NWR, CORR, OPER	20	5	L3	5	6	6	20	RCPTS, CUBICLE, OPER RM
RCPTS, MULTI-PURP,NWR	20	7	L1	7	8	8	20	RCPTS, CUBICLE, OPER RM
MICROWAVE, READY RM	20	9	L2	9	10	10	20	RCPTS, ELEC TECH, READY RM, EQUIP, MECH SPACE
APPLIANCE, READY RM	20	11	L3	11	12	12	20	RCPTS, EQUIP, ELEC RM
RCPTS, COMM	20	13	L1	13	14	14	20	REFR, READY ROOM
RCPTS, ELEC TECH, BENCH	20	15	L2	15	16	16	20	RCPTS, ELEC TECH, CORR, OUTSIDE
RCPTS, ELEC TECH, BENCH	20	17	L3	17	18	18	20	RCPTS, RCPTN
RCPTS, ELEC TECH, BENCH	20	19	L1	19	20	20	20	RCPTS, MIC, CORR
SPARE	20	21	L2	21	22	22	20	RCPTS, STOR MEN, WOMEN, EWC
DOOR ENTRY PWR SUPPLY & DOORBELL	20	23	L3	23	24	24	20	RCPTS, FILE/COPY, CORR, OUTSIDE
EF-1, MEN & WOMEN RM	20	25	L1	25	26	26	20	TEMP CONTROL COMPONENTS
REMOTE CONTROL BOX	20	27	L2	27	28	28	20	SMOKE DETECTORS, DAMPER MOTORS
RCPTS, CUBICLE, ELEC TECH	20	29	L3	29	30			
SPARE	20	31	L1	31	32	30	20	TEMP CONNECTION FOR EXIST RADAR
FUTURE WATER SOFTENER	20	33	L2	33	34			
RCPTS, CUBICLE, MIC, RCPTN	20	35	L3	35	36	32	20	SPARE
TF-2, ELEC RM	20	37	L1	37	38			
DOWNLIGHTS, MULTI-PURP	20	39	L2	39	40	34	60	FUTURE AWIPS ANTENNA HEATER
IRRIGATION SYSTEM CONTROLLER	20	41	L3	41	42			

VOLTS 208/120V | PANEL "PPC" | MAINS 225A MCB
PHASE 3ø | LOCATION EQUIPMENT RM 114 | FEEDER DP-3A
WIRE 4W , 10,000 AIC

DESCRIPTION	BKR	CKT	POLE		POLE	CKT	BKR	DESCRIPTION
RCPTS, RCPTN, MIC, OFFICE	20	1	L1	1	2			
PLUGMOLD COMM RM	20	3	L2	3	4	2	20	FUTURE RPGOP
PLUGMOLD COMM RM	20	5	L3	5	6			
RCPTS, COMM RM	20	7	L1	7	8			
TERMINAL BOX #1	20	9	L2	9	10	4	30	FUTURE RPG
TERMINAL BOX #1	20	11	L3	11	12			
TERMINAL BOX #1 (AWIPS)	20	13	L1	13	14	6	20	FUTURE UCP
TERMINAL BOX #1 (AWIPS)	20	15	L2	15	16	8	20	FUTURE RPGOP WKSTA
TERMINAL BOX #1 (AWIPS)	20	17	L3	17	18	10	20	SPARE
TERMINAL BOX #1 (AWIPS)	20	19	L1	19	20	12	20	TERMINAL BOX #2
TERMINAL BOX #1	30	21	L2	21	22	14	20	TERMINAL BOX #2
TERMINAL BOX #1	30	23	L3	23	24	16	20	TERMINAL BOX #2 (AWIPS)
TERMINAL BOX #3 (AWIPS)	20	25	L1	25	26	18	20	TERMINAL BOX #2 (AWIPS)
TERMINAL BOX #3 (AWIPS)	20	27	L2	27	28	20	20	TERMINAL BOX #2 (AWIPS)
TERMINAL BOX #3 (AWIPS)	20	29	L3	29	30	22	20	TERMINAL BOX #2 (AWIPS)
TERMINAL BOX #3 (AWIPS)	20	31	L1	31	32	24	30	TERMINAL BOX #2
TERMINAL BOX #3	30	33	L2	33	34	26	30	TERMINAL BOX #2
TERMINAL BOX #3	30	35	L3	35	36	28	20	SPARE
TERMINAL BOX #3	45	37	L1	37	38	30	20	SPARE
TERMINAL BOX #3	45	39	L2	39	40	32	20	SPARE
SPARE	20	41	L3	41	42	34	20	SPARE

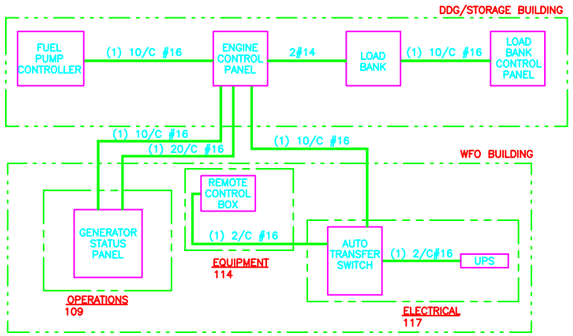

GENERATOR CONTROL DIAGRAM

EQUIPMENT	FROM	EQUIPMENT	TO
PAC (REMOTE CONTROL BOX)	TB	AUTOMATIC TRANSFER SWITCH	TB3
1	84	1	23
2	85	2	25
UPS	TB X2	AUTOMATIC TRANSFER SWITCH	TB3
1	6	1	20
2	8	2	22
TEMPERATURE CONTROL SYSTEM	TB	AUTOMATIC TRANSFER SWITCH	TB1
1		1	2
2		2	3

ATS INTERCONNECTION TABLE

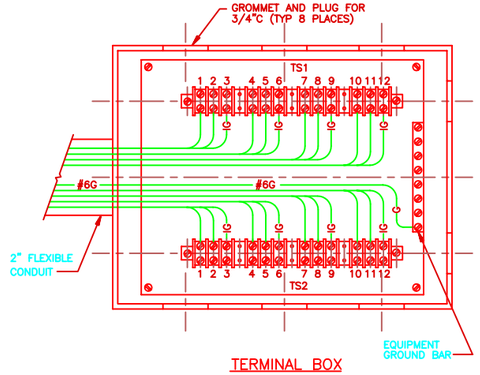

TERMINAL BOX

DETAIL 1 / E06
SCALE: NONE

TERMINAL BOX #1

TERMINAL #	CIRCUIT #	WIRE SIZE
TS1-1,2,3	PPC-9,20A,1P	2 #10, 1#10G
TS1-4,5,6	PPC-11,20A,1P	2 #10, 1#10G
TS1-7,8,9	PPC-13,20A,1P	2 #10, 1#10G
TS1-10,11,12	PPC-15,20A,1P	2 #10, 1#10G
TS2-1,2,3	PPC-17,20A,1P	2 #10, 1#10G
TS2-4,5,6	PPC-19,20A,1P	2 #10, 1#10G
TS2-7,8,9	PPC-21,30A,1P	2 #8, 1#10G
TS2-10,11,12	PPC-23,30A,1P	2 #8, 1#10G

TERMINAL BOX #2

TERMINAL #	CIRCUIT #	WIRE SIZE
TS1-1,2,3	PPC-12,20A,1P	2 #10, 1#10G
TS1-4,5,6	PPC-14,20A,1P	2 #10, 1#10G
TS1-7,8,9	PPC-16,20A,1P	2 #10, 1#10G
TS1-10,11,12	PPC-18,20A,1P	2 #10, 1#10G
TS2-1,2,3	PPC-20,20A,1P	2 #10, 1#10G
TS2-4,5,6	PPC-22,20A,1P	2 #10, 1#10G
TS2-7,8,9	PPC-24,30A,1P	2 #8, 1#10G
TS2-10,11,12	PPC-26,30A,1P	2 #8, 1#10G

TERMINAL BOX #3

TERMINAL #	CIRCUIT #	WIRE SIZE
TS1-1,2,3	PPC-25,20A,1P	2 #10, 1#10G
TS1-4,5,6	PPC-27,20A,1P	2 #10, 1#10G
TS1-7,8,9	PPC-29,20A,1P	2 #10, 1#10G
TS1-10,11,12	PPC-31,20A,1P	2 #10, 1#10G
TS2-1,2,3	PPC-33,30A,1P	2 #8, 1#10G
TS2-4,5,6	PPC-35,30A,1P	2 #8, 1#10G
TS2-7,8,9	PPC-37,45A,1P	2 #6, 1#10G
TS2-10,11,12	PPC-39,45A,1P	2 #6, 1#10G

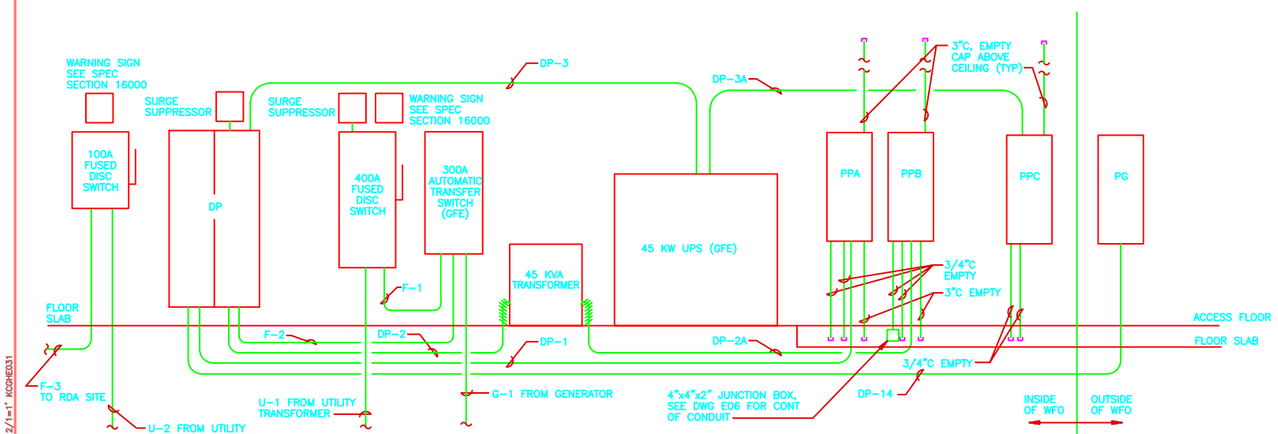

ELECTRICAL RISER DIAGRAM

DETAIL 2 / E06
SCALE: NONE

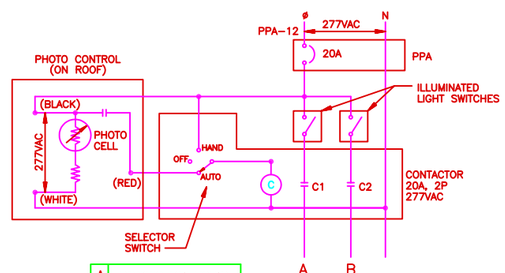

A	PARKING LOT LIGHTS
B	WFO BUILDING SOFFIT AND SIGN LIGHTS, DDG/STOR BLDG EXTERIOR LIGHTS

EXTERIOR LIGHTING CONTROL DIAGRAM
SCALE: NONE

NO.	DATE	PREPARED BY	CHECKED BY	RE APPROVED	ACTG./DES. APPROVED	DESCRIPTION OF REVISION
1	5/12/95	CCT	KPW/TMS	BLR/TLS	FOR/JTS	REVISED PER AS-BUILT CONDITIONS

DRAWN WILDSCHUETZ
CHECKED WILDSCHUETZ
SUPV. ENGR. T.M. SUPER
ENGR./PROJ. MGR. BLR/TLS
ACCTG./DES. APPROVED FOR/JTS

WFO / NEXRAD PROGRAM
PROJECT NO. GH01

SPECIAL ENGINEERING PROGRAM OFFICE (SEPO)
WEATHER FORECAST OFFICE
MOBILE, ALABAMA

PANELBOARDS, SCHEMATICS AND CONTROL DIAGRAMS

PROGRAM MANAGEMENT SERVICES CONTRACTOR
FLUOR DANIEL
GOULD EVANS ARCHITECTS, P.A.
KANSAS CITY, MO. U.S.A.

044131- | 5 | E03 | GH | 1

FDSP0004 05/09/95 12:46 CCT 12/1=1" KOHEO31

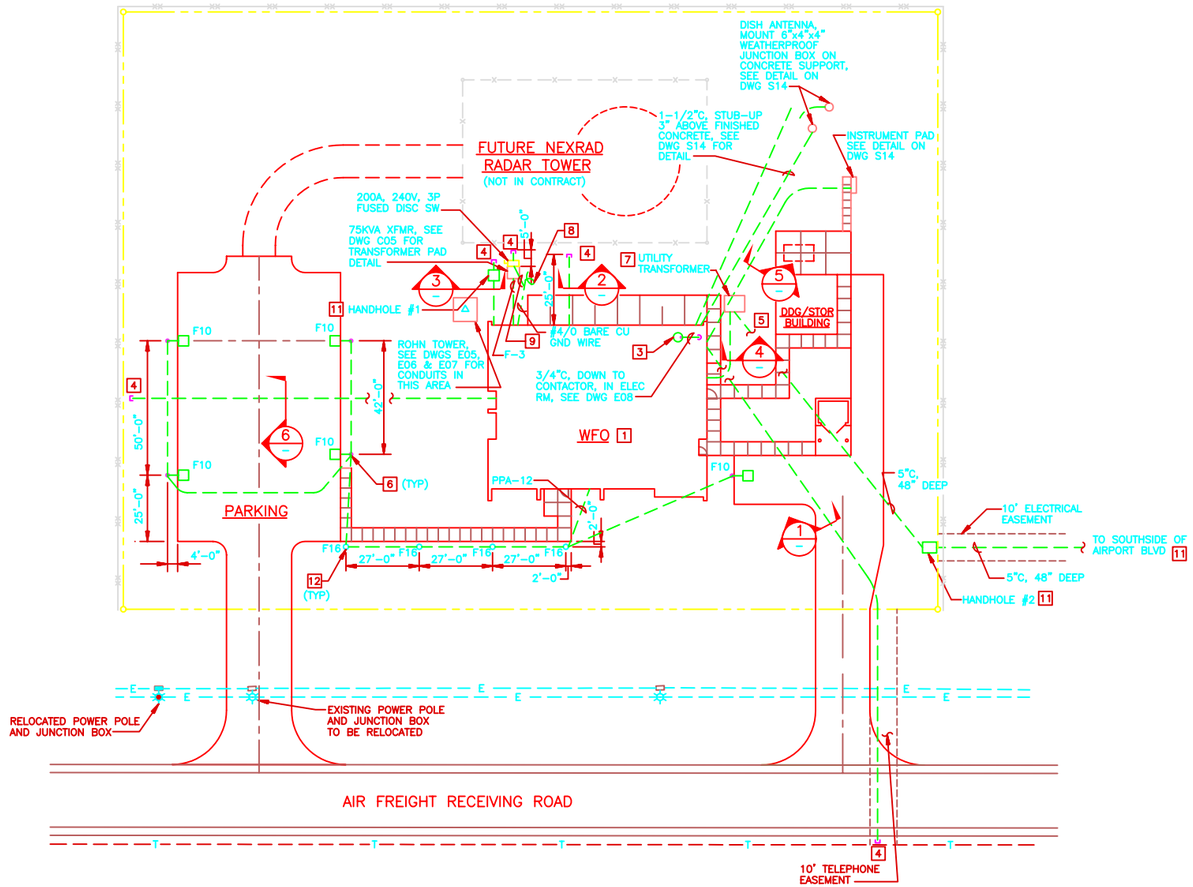

ELECTRICAL SITE PLAN
SCALE: 1"=20'

GRID NORTH

BLDG NORTH

NOTES

1. SEE SPECIFICATION SECTION 16000 FOR LIGHTNING PROTECTION.
2. SEE SPECIFICATION SECTION 02210 FOR EARTHWORK.
3. SEE DWG E10, DETAIL 6, FOR PHOTOCELL MOUNTING DETAIL.
4. CAP AND STAKE CONDUIT FOR FUTURE USE WITH 4"x4" WOOD POST, 12" ABOVE FINISHED GRADE, PAINTED ORANGE.
5. SEE DWGS E06, E07 & E09 FOR DETAILED CONDUIT LOCATIONS IN THIS AREA.
6. SEE DWG E10, DETAIL 5, FOR LIGHT POLE DETAIL.
7. SEE SPECIFICATION SECTION 16000, ATTACHMENT E, FOR TRANSFORMER PAD GROUNDING DETAIL.
8. COIL 6 FEET OF COPPER GROUND AND/OR GUARD WIRE AT RDA SITE. LEAVE COILED WIRE SIX INCHES BELOW GRADE FOR FUTURE CONNECTIONS BY OTHERS.
9. BOND GROUNDING ELECTRODE CONDUCTOR OF SAFETY SWITCH TO COPPER GROUND WIRE.
10. ROUTE GUARD WIRE AROUND HANDHOLES.
11. SEE DWG C01 & C02 FOR LOCATION OF HANDHOLES & EXACT DISTANCE TO AIRPORT BLVD.
12. SEE DWG E10, DETAIL 8, FOR LIGHT BOLLARD DETAIL.

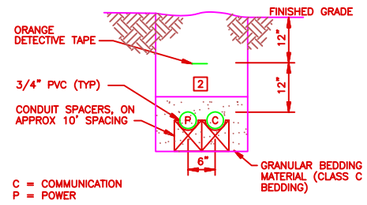

INSTRUMENT PLOT FROM WFO CONDUIT TRENCHING

SECTION 5 — SCALE: NONE

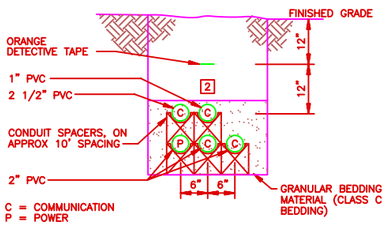

TEMP EXISTING RADAR CONDUIT TRENCHING

SECTION 6 — SCALE: NONE

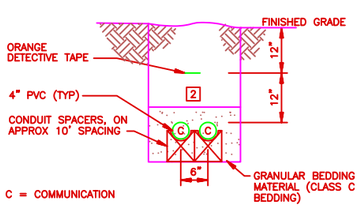

TELCO CONDUIT TRENCHING

SECTION 1 — SCALE: NONE

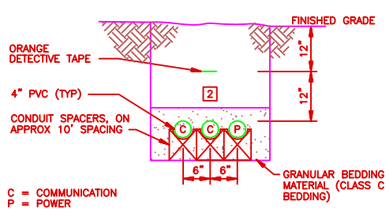

COMMUNICATIONS CONDUIT TRENCHING

SECTION 2 — SCALE: NONE

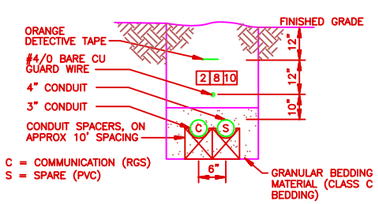

RDA FROM WFO CONDUIT TRENCHING

SECTION 3 — SCALE: NONE

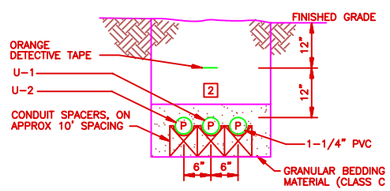

SERVICE ENTRANCE CONDUIT TRENCHING

SECTION 4 — SCALE: NONE

0 10' 20' 40' 60'
SCALE: 1"=20'

NO.	DATE	PREPARED BY	CHECKED BY	PJM APPROVED	ACTR./CORR. APPROVED	DESCRIPTION OF REVISION
1	5/12/95	CCT	KPW/TMS	BLR/TLS	FGR/JTS	REVISED PER AS-BUILT CONDITIONS

WFO / NEXRAD PROGRAM
PROJECT NO. GH01

DRAWN: WILDSCHUETZ
CHECKED: WILDSCHUETZ
SUPV. ENGR.: T.M. SUPER
ENGR/PROJ. MGR.: BLR/TLS
ACOR./CORR. APPROVED: FGR/JTS

SPECIAL ENGINEERING PROGRAM OFFICE (SEPO)

WEATHER FORECAST OFFICE
MOBILE, ALABAMA

ELECTRICAL SITE PLAN

PROGRAM MANAGEMENT SERVICES CONTRACTOR
FLUOR DANIEL
GOULD EVANS ARCHITECTS, P.A.
KANSAS CITY, MO. U.S.A.

044131- | 5 | E04 | GH | 1

FDSP0004 05/09/95 12:46 CCT 1=20' KGHE041

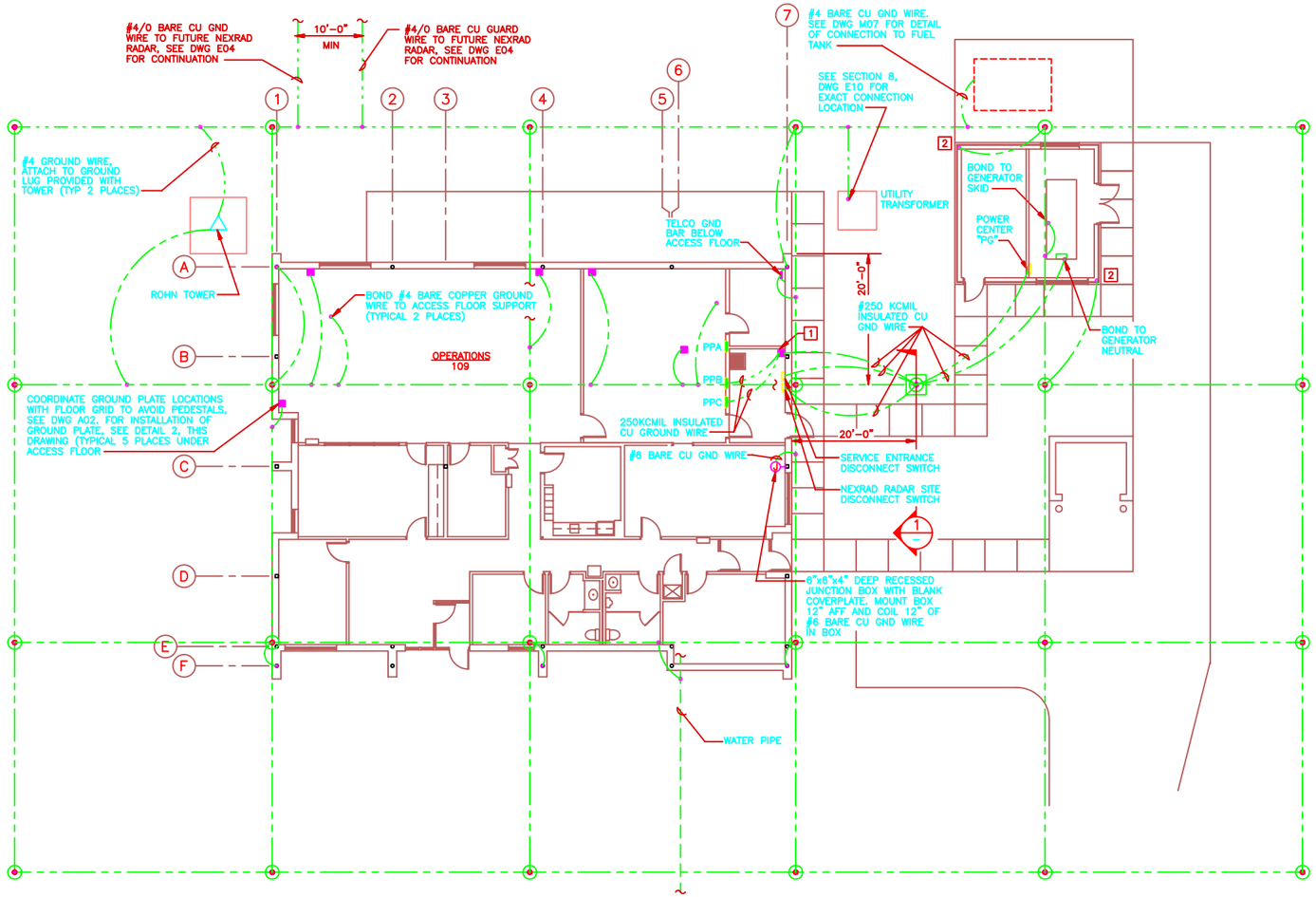

NOTES

1. CONNECTION TO GROUNDING PLATE SHALL BE MADE WITH A MECHANICAL CONNECTOR, TYP. INSTALLATION SIMILAR TO DETAIL 2, THIS DRAWING.
2. BOND TO STRAP ANCHOR CHANNEL, SEE DWG S11 FOR EXACT LOCATION.
3. GROUND TEST WELL FRAME AND COVER SHALL BE CASTINGS FABRICATED FROM GREY IRON CONFORMING TO ASTM A48. FRAME AND COVER SHALL BE SUITABLE FOR LIGHT TRAFFIC, CONCRETE SLAB APPLICATIONS. COVER SHALL BE NON-ROCKING AND SHALL BE LETTERED "ELECTRIC".

GROUNDING PLAN
SCALE: 1/8"=1'-0"

BUILDING NORTH

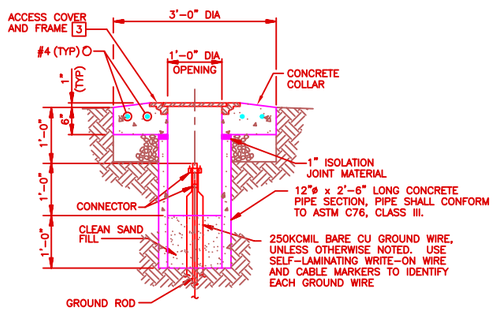

GROUND TEST WELL
SECTION 1
SCALE: NONE

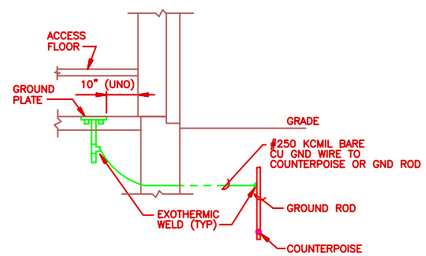

EQUIPMENT GROUNDING PLATE DETAIL
DETAIL 2
SCALE: NONE

0 4' 8' 16' 24'
SCALE: 1/8"=1'-0"

NO.	DATE	PREPARED BY	CHECKED BY	PIS APPROVED	ACTR/CONTR APPROVED	DESCRIPTION OF REVISION
1	5/12/95	CCT	KPW/TMS	BLR/TLS	FGR/JTS	REVISED PER AS-BUILT CONDITIONS

WFO / NEXRAD PROGRAM
PROJECT NO. GH01

PROGRAM MANAGEMENT SERVICES CONTRACTOR
FLUOR DANIEL
GOULD EVANS ARCHITECTS, P.A.
KANSAS CITY, MO. U.S.A.

SEPO

DRAWN: WILDSCHUETZ
CHECKED: WILDESCHUETZ
SUPV. ENGR: T.M. SUPER
ENGR/PROJ. MGR.: BLR/TLS
ACCTR./CONTR.: FGR/JTS

SPECIAL ENGINEERING PROGRAM OFFICE (SEPO)

WEATHER FORECAST OFFICE
MOBILE, ALABAMA

ELECTRICAL
GROUNDING PLAN

SIZE	DRG. NO.	CLIN.	REV.
5	E05	GH	1

044131-

FDSP0004 05/09/95 12:46 CCT 1/8=1' KOPIED51

NOTES

1. TERMINAL BOX, LOCATED BELOW ACCESS FLOOR. SEE DETAIL 1, ON DWG E03.
2. SEE ELECTRICAL RISER DIAGRAM, DWG E03 FOR WIRE AND CONDUIT ROUTING.
3. MOUNT 10"x10"x6" JUNCTION BOX ON UNISTRUT TO FLOOR UNDER ACCESS FLOOR.
4. RECEPTACLE AND BOX WITH 10'-0" OF FLEXIBLE CONDUIT UNDER ACCESS FLOOR (NOT ATTACHED TO FLOOR) AND LEFT APPROXIMATELY IN POSITION SHOWN ON DRAWING.
5. DISCONNECT SWITCHES FOR AHU-1 & AHU-2 ARE MOUNTED DIRECTLY ABOVE ONE ANOTHER. TOP OF AHU-1 DISCONNECT SHALL BE 6'-6" AFF AND TOP OF AHU-2 DISCONNECT SHALL BE 4'-6" AFF. WIRING SHOWN IS TYPICAL FOR EACH UNIT.
6. EACH 4"C SHALL BE FLUSH ON THE INTERIOR WALL WITH A BRUSHED ALUMINUM COVER PLATE. THE 4"C SHALL BE CAPPED ON THE EXTERIOR AND MADE WEATHERPROOF. THE EXTERIOR CAPS SHALL BE PERMANENTLY AFFIXED TO THE BUILDING EXTERIOR VIA A CORROSION RESISTANT CHAIN, 1'-0" ABOVE FINISHED GRADE.
7. RECEPTACLE AND BOX WITH 20'-0" OF FLEXIBLE CONDUIT UNDER ACCESS FLOOR (NOT ATTACHED TO FLOOR) AND LEFT APPROXIMATELY IN POSITION SHOWN ON DRAWING.
8. UNIT FURNISHED WITH DISCONNECT SWITCH AND/OR MAGNETIC STARTER (IF REQUIRED) BY MANUFACTURER. POWER WIRING CONNECTIONS BY CONTRACTOR. SEE DWG M06 FOR EQUIPMENT SCHEDULE.
9. MOUNT JUNCTION BOX ON UNISTRUT TO FLOOR UNDER ACCESS FLOOR.
10. SEE FURNITURE CONNECTION, DETAIL 3, DWG E10. PROVIDE 10 CONNECTORS AND STORE IN MIC OFFICE.
11. SMOKE DETECTOR FOR AHU-1 & AHU-2 ARE IN SIMILAR LOCATIONS, SEE DWG M04 FOR UNIT LOCATIONS.

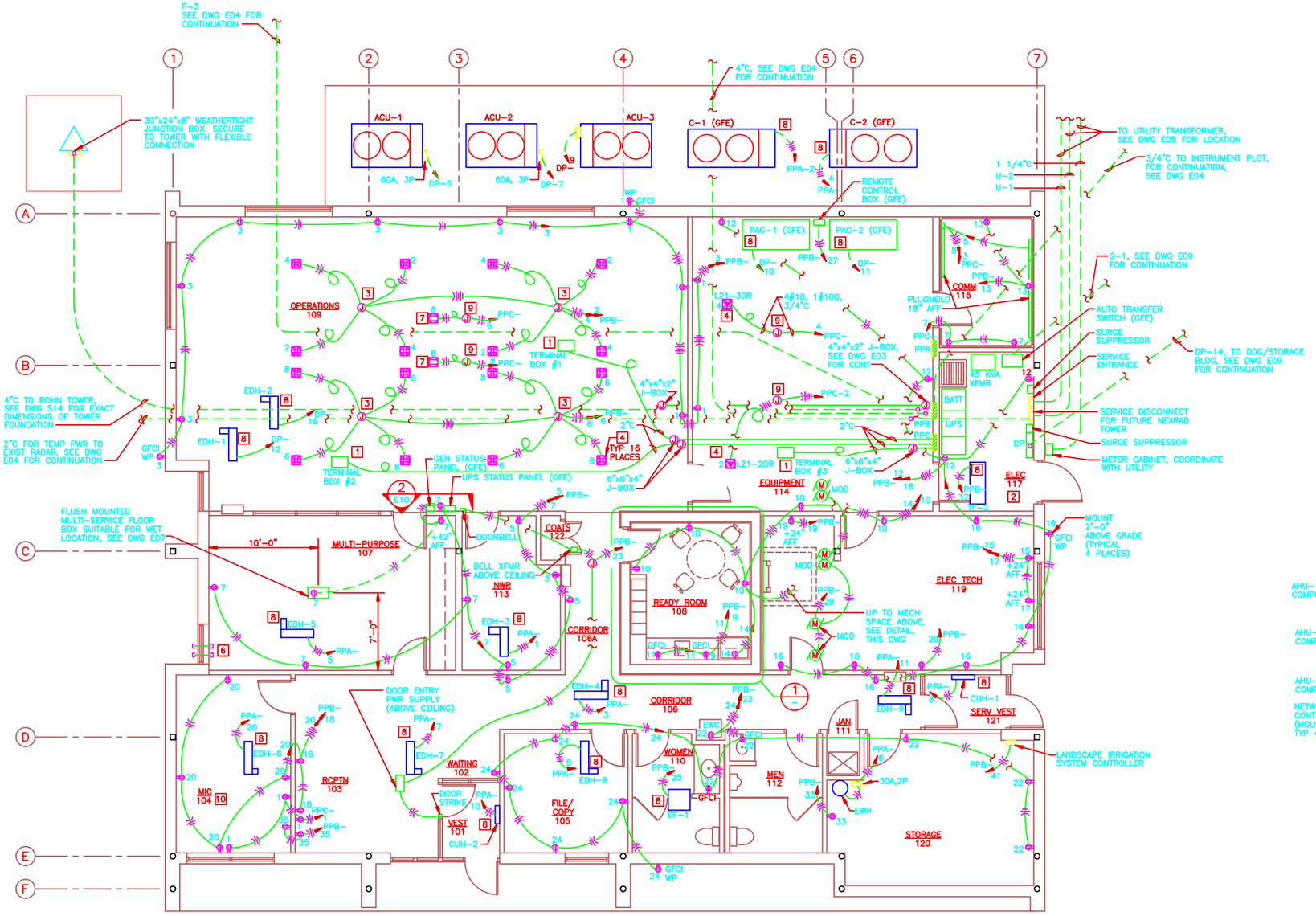

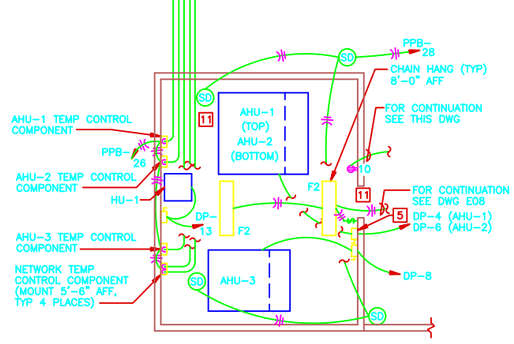

MECHANICAL EQUIPMENT SPACE PLAN

SCALE: 1/4"=1'-0"

DETAIL 1/–

SCALE: NONE

POWER PLAN

SCALE: 1/4"=1'-0"

BUILDING NORTH

0 2' 4' 8' 12'

SCALE: 1/4"=1'-0"

NO.	DATE	PREPARED BY	CHECKED BY	PD APPROVED	ACTR/CORR APPROVED	DESCRIPTION OF REVISION
1	5/12/95	CCT	KPW/TMS	BLR/TLS	FOR/JTS	REVISED PER AS-BUILT CONDITIONS

WFO / NEXRAD PROGRAM
PROJECT NO. GM01

PROGRAM MANAGEMENT SERVICES CONTRACTOR
FLUOR DANIEL GOULD EVANS ARCHITECTS, P.A.
KANSAS CITY, MO. U.S.A.

DRAWN WILDESCHUETZ
CHECKED WILDESCHUETZ
SUP'L ENGR. T.M. SUPER
ENGR/PROJ. MGR. BLR/TLS
ACCTR./CORR. FOR/JTS

SPECIAL ENGINEERING PROGRAM OFFICE (SEPO)
WEATHER FORECAST OFFICE
MOBILE, ALABAMA
ELECTRICAL POWER PLAN

044131–	SIZE 5	DWG. NO. E06	CURR. GH	REV. 1

FDSP0004 05/09/95 12:47 CCT 1/4=1' KGNHE061

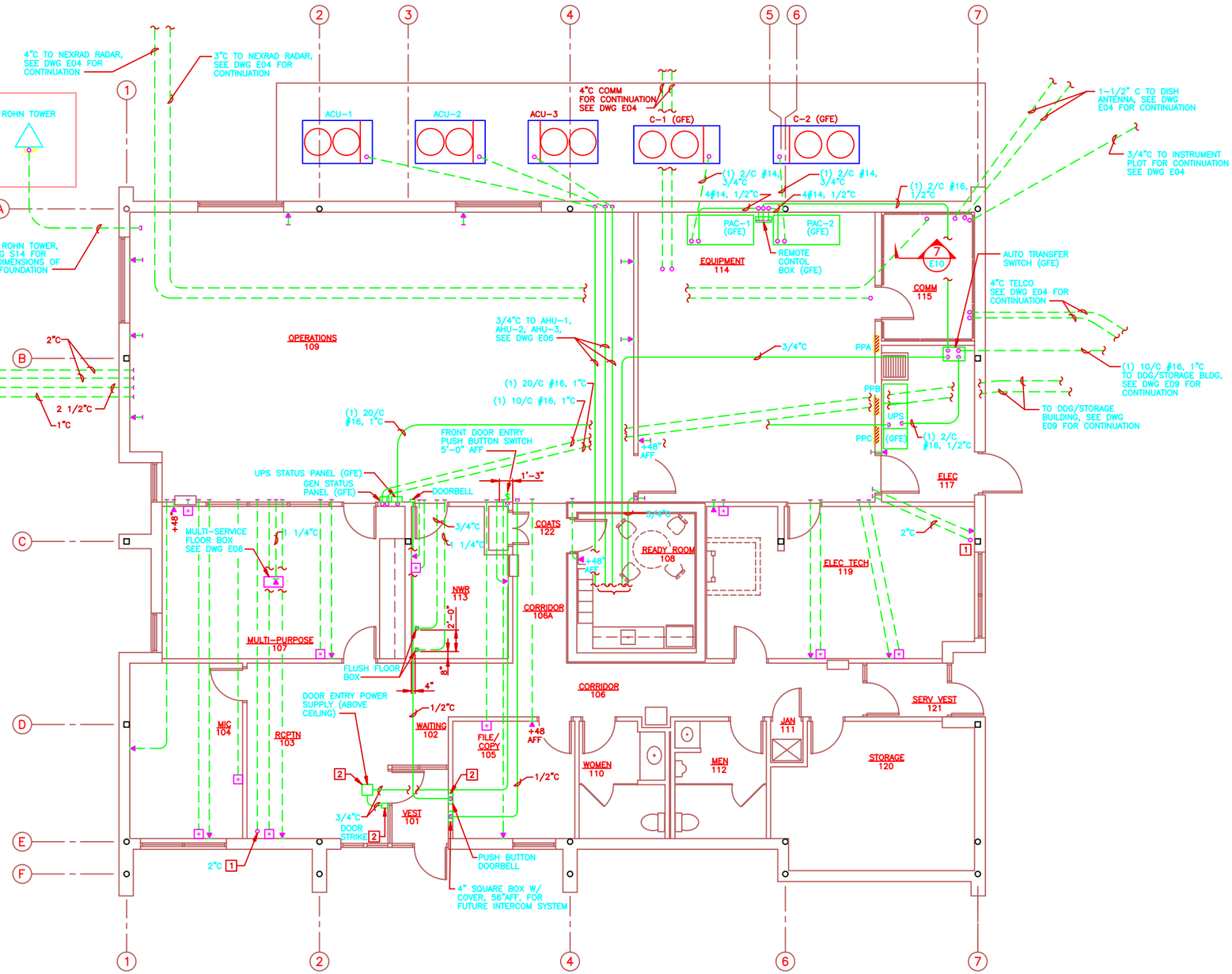

NOTES

1. PROVIDE CONDUIT WITH THREADED CAP. CAP SHALL BE FLUSH WITH FLOOR.
2. PROVIDE CONTROL CABLE PER MANUFACTURERS RECOMMENDATIONS.

COMMUNICATION AND CONTROL PLAN
SCALE: 1/4"=1'-0"

BUILDING NORTH

0 2' 4' 8' 12'
SCALE: 1/4"=1'-0"

NO.	DATE	PREPARED BY	CHECKED BY	PDS APPROVED	ACTR/CONTR APPROVED	DESCRIPTION OF REVISION
1	5/12/95	CCT	KPW/TMS	BLR/TLS	FOR/JTS	REVISED PER AS-BUILT CONDITIONS

WFO / NEXRAD PROGRAM
PROJECT NO. GH01

SPECIAL ENGINEERING PROGRAM OFFICE (SEPO)

DRAWN: WILDSCHUETZ
CHECKED: WILDESCHUETZ
SUPV. ENGR: T.M. SUPER
ENGR/PROJ. MGR.: BLR/TLS
ACCPTR./CONTR.: FOR/JTS

WEATHER FORECAST OFFICE
MOBILE, ALABAMA

COMMUNICATIONS AND CONTROLS PLAN

PROGRAM MANAGEMENT SERVICES CONTRACTOR
FLUOR DANIEL
GOULD EVANS ARCHITECTS, P.A.
KANSAS CITY, MO.
U.S.A.

SEPO

SIZE	DWG. NO.	CLIN.	REV.
044131-	5 E07	GH	1

FDSP0004 05/09/95 12:47 CCT 1/4=1' KOCHE071

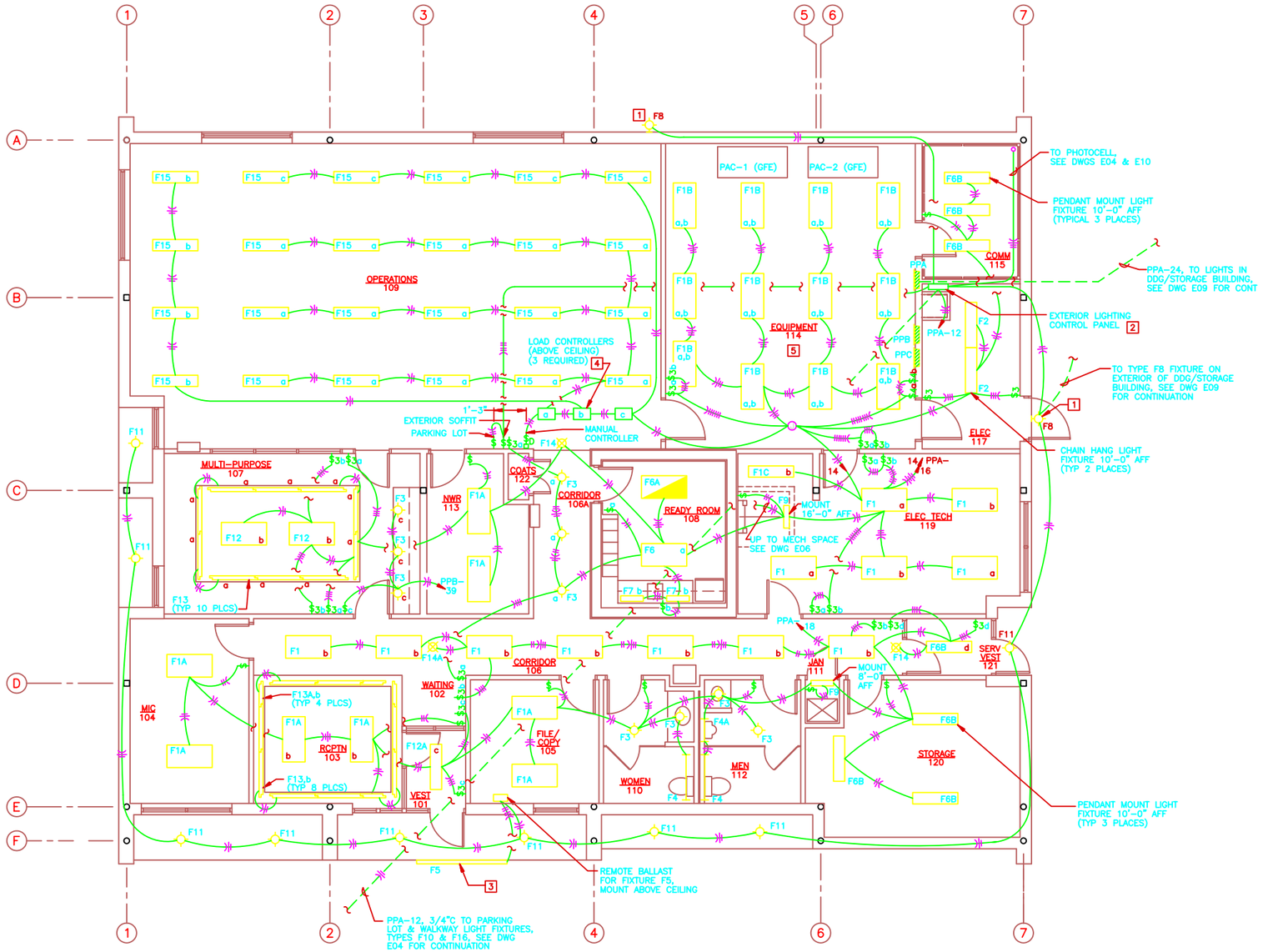

NOTES

1. SEE DWG A03 FOR FIXTURE ELEVATION.
2. SEE DRAWING E03 FOR EXTERIOR LIGHTING CONTROL DIAGRAM.
3. SEE DRAWING A03 FOR EXACT LOCATION OF F5 FIXTURE OVER NOAA LOGO SIGN.
4. PROVIDE PLENUM-RATED CONTROL CABLE PER MANUFACTURER'S RECOMMENDATIONS.
5. LIGHT FIXTURES IN EQUIPMENT ROOM TO HAVE INBOARD, OUTBOARD SWITCHING. SWITCH A, CENTER LAMP; SWITCH B, TWO OUTSIDE LAMPS.

LIGHTING PLAN
SCALE: 1/4"=1'-0"

BUILDING NORTH

0 2' 4' 8' 12'
SCALE: 1/4"=1'-0"

NO.	DATE	PREPARED BY	CHECKED BY	PD APPROVED	ACTR/CORR APPROVED	DESCRIPTION OF REVISION
1	5/12/95	CCT	KPW/TMS	BLR/TLS	FGR/JTS	REVISED PER AS-BUILT CONDITIONS

WFO / NEXRAD PROGRAM
PROJECT NO. GH01

SPECIAL ENGINEERING PROGRAM OFFICE (SEPO)

WEATHER FORECAST OFFICE
MOBILE, ALABAMA

ELECTRICAL LIGHTING PLAN

DRAWN: WILDSCHUETZ
CHECKED: WILDESCHUETZ
SUPVL. ENGR.: T.M. SUPER
ENGR/PROJ. MGR.: BLR/TLS
ACOTR/CORR: FGR/JTS

PROGRAM MANAGEMENT SERVICES CONTRACTOR
FLUOR DANIEL
GOULD EVANS ARCHITECTS, P.A.
KANSAS CITY, MO. U.S.A.

044131- | 5 | E08 | GH | 1

FDSP0004 05/09/95 12:48 CCT 1/4=1' KGHE081

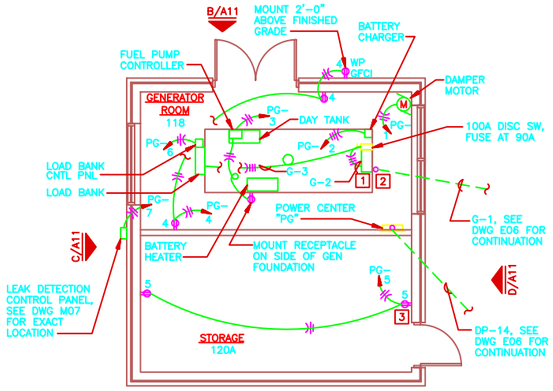

A/A11

POWER PLAN

SCALE: 1/4" = 1'-0"

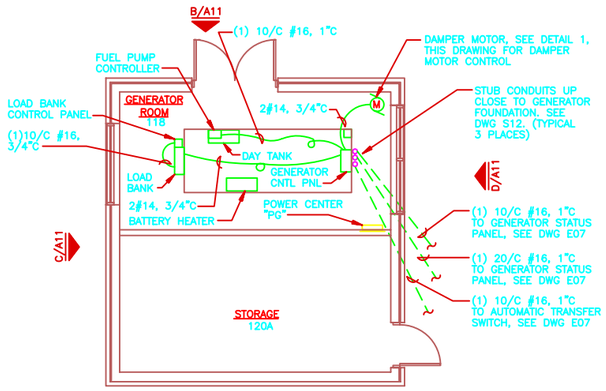

A/A11

COMMUNICATION PLAN

SCALE: 1/4" = 1'-0"

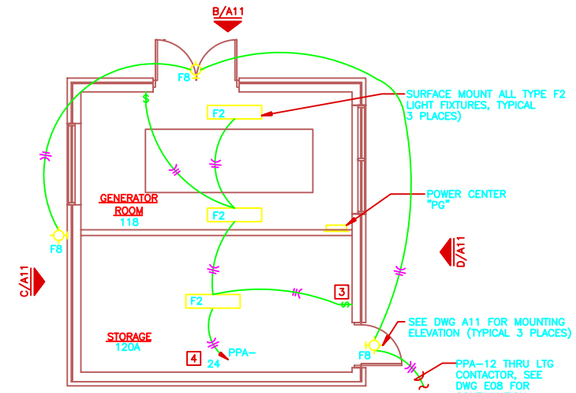

A/A11

LIGHTING PLAN

SCALE: 1/4" = 1'-0"

VOLTS 208/120V
PHASE 3ø
WIRE 4W , 10,000 AIC

POWER PANEL PG
LOCATION GENERATOR ROOM

MAINS –
FEEDER N/A

DESCRIPTION	BKR	CKT	POLE		POLE	CKT	BKR	DESCRIPTION
DAMPER MOTOR	20	1	1		2	2	20	BATTERY CHARGER, ENGINE HEATER
FUEL PUMP, DAY TANK HTR, BATT HTR	20	3	3		4	4	20	RCPTS, GENERATOR ROOM, EXTERIOR
RCPTS, STORAGE	20	5	5		6	4	20	RCPTS, GENERATOR ROOM, EXTERIOR
LEAK DETECTION CONTROL PANEL	20	7	7		8	6	20	LOAD BANK CONTROL PANEL
SPARE	20	9	9		10	8	20	SPARE
SPACE	–	–	11		12	–	–	SPACE
SPACE	–	–	13		14	–	–	SPACE
SPACE	–	–	15		16	–	–	SPACE
SPACE	–	–	17		18	–	–	SPACE

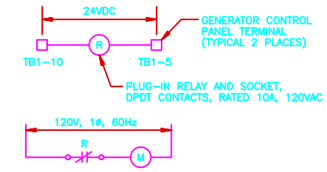

DAMPER MOTOR CONTROL DIAGRAM

DETAIL 1

SCALE: NONE

NOTES

1. CONNECT LOAD BANK TO LOAD SIDE OF MAIN CIRCUIT BREAKER.
2. CURRENT TRANSFORMER (PROVIDED BY LOAD BANK MANUFACTURER) TO BE MOUNTED IN GENERATOR CONTROL PANEL. INSTALL ON PHASE A OF CIRCUIT G-1.
3. MOUNT LIGHT SWITCH AND DUPLEX RECEPTACLE IN SAME OUTLET BOX WITH COVERPLATE FOR TOGGLE SWITCH AND DUPLEX RECEPTACLE.
4. PANEL PPA LOCATED IN WFO, EQUIP RM, SEE DWG E08.

GENERAL DDG/STORAGE BUILDING NOTES

1. FOR DRAWING LIST AND ABBREVIATIONS, SEE DWG I01.
2. CONDUIT STUB UP LOCATIONS SHALL BE VERIFIED BY CONTRACTOR PRIOR TO INSTALLATION.
3. SEE DWG E03 FOR GENERATOR CONTROL DIAGRAM.

0 2' 4' 8' 12'

SCALE: 1/4"=1'-0"

NO.	DATE	PREPARED BY	CHECKED BY	FOR APPROVED	ACTR./CORR. APPROVED	DESCRIPTION OF REVISION
1	5/12/95	CCT	KPW/TMS	BLR/TLS	FOR/JTS	REVISED PER AS-BUILT CONDITIONS

WFO / NEXRAD PROGRAM
PROJECT NO. GH01

PROGRAM MANAGEMENT SERVICES CONTRACTOR
FLUOR DANIEL GOULD EVANS ARCHITECTS, P.A.
KANSAS CITY, MO. U.S.A.

SEPO

DRAWN WILDSCHUETZ
CHECKED WILDESCHUETZ
SUPV. ENGR. T.M. SUPER
ENGR/PROJ. MGR. BLR/TLS
ACCTR./CORR. FOR/JTS

SPECIAL ENGINEERING PROGRAM OFFICE (SEPO)
WEATHER FORECAST OFFICE
MOBILE, ALABAMA
ELECTRICAL
DDG/STORAGE BUILDING

044131-	SIZE 5	DWG. NO. E09	CLIN. GH	REV. 1

FDSP0004 05/09/95 12:48 CCT 1/4=1' KGHE091

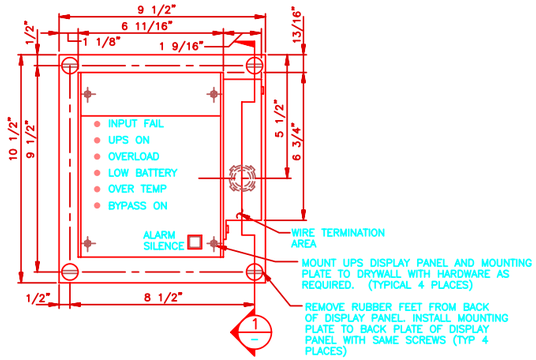

UPS STATUS PANEL (GFE) DETAIL
SCALE: NONE

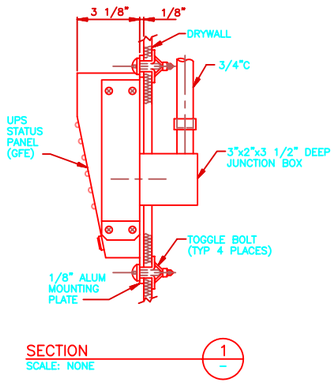

SECTION
SCALE: NONE
1
–

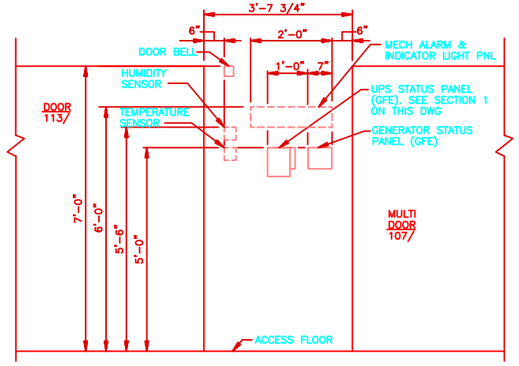

SECTION
SCALE: NONE
2
E06

NOTE: SEE DWG M03 FOR LOCATION OF EQUIPMENT WITH DASHED LINES.

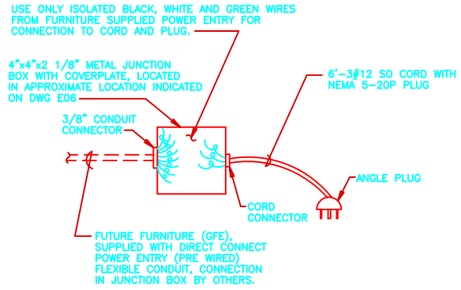

ELECTRICAL CONNECTION FOR FURNITURE

DETAIL
SCALE: NONE
3
E06

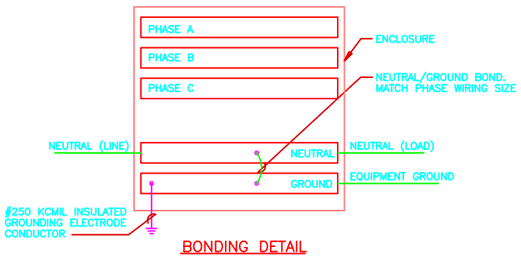

BONDING DETAIL

DETAIL
SCALE: NONE
4
E02

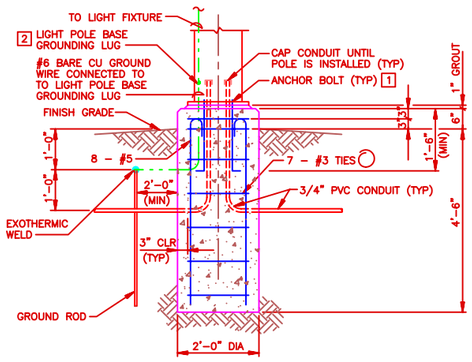

LIGHT POLE DETAIL

DETAIL
SCALE: NONE
5
E04

NOTES
1. ANCHOR BOLTS SHALL BE DESIGNED AND FURNISHED BY THE LIGHT POLE MANUFACTURER. ANCHOR BOLTS PROVIDED SHALL BE GALVANIZED.
2. BOND INCOMING EQUIPMENT GROUNDING CONDUCTOR TO LIGHT POLE BASE GROUNDING LUG.

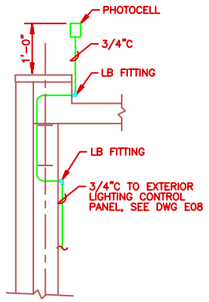

PHOTOCELL MOUNTING DETAIL

DETAIL
SCALE: NONE
6
E04
E08

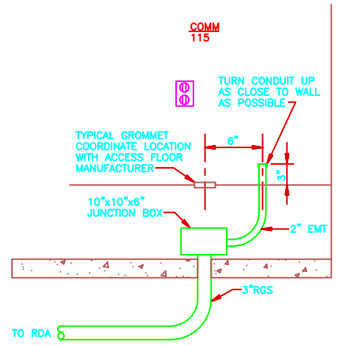

SECTION
SCALE: NONE
7
E07

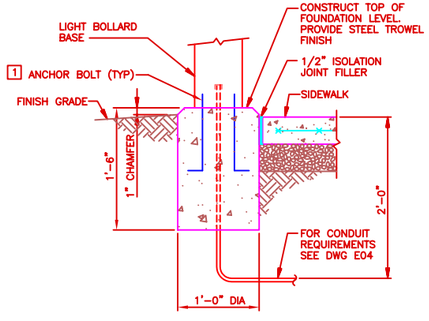

TYPICAL LIGHT BOLLARD FOUNDATION DETAIL

DETAIL
SCALE: NONE
8
E04

NOTES
1. ANCHOR BOLTS FOR THE LIGHT BOLLARD SHALL BE FURNISHED BY THE LIGHT BOLLARD MANUFACTURER, SHALL BE GALVANIZED, AND SHALL BE INSTALLED TO SUIT THE THE LIGHT BOLLARD PROVIDED. PROVIDE ANCHOR BOLT PROJECTION RECOMMENDED BY THE BOLLARD MANUFACTURER.

NO.	DATE	PREPARED BY	CHECKED BY	QC APPROVED	ACPE/CORR APPROVED	DESCRIPTION OF REVISION
1	5/12/95	CCT	KPW/TMS	BLR/TLS	FSR/JTS	REVISED PER AS-BUILT CONDITIONS

WFO / NEXRAD PROGRAM
PROJECT NO. GM01

PROGRAM MANAGEMENT SERVICES CONTRACTOR
FLUOR DANIEL GOULD EVANS ARCHITECTS, P.A.
KANSAS CITY, MO. U.S.A.

DRAWN: WILDSCHUETZ
CHECKED: WILDSCHUETZ
SUPV. ENGR.: T.M. SUPER
ENGR./PROJ. MGR.: BLR/TLS
ACCPE./CORR.: FSR/JTS

SPECIAL ENGINEERING PROGRAM OFFICE (SEPO)
WEATHER FORECAST OFFICE
MOBILE, ALABAMA
ELECTRICAL SECTIONS & DETAILS

044131–	SIZE 5	DWG. NO. E10	CUST. GH	REV. 1

FDSP0004 05/09/95 12:48 CCT 12/1=1" KOPIE101

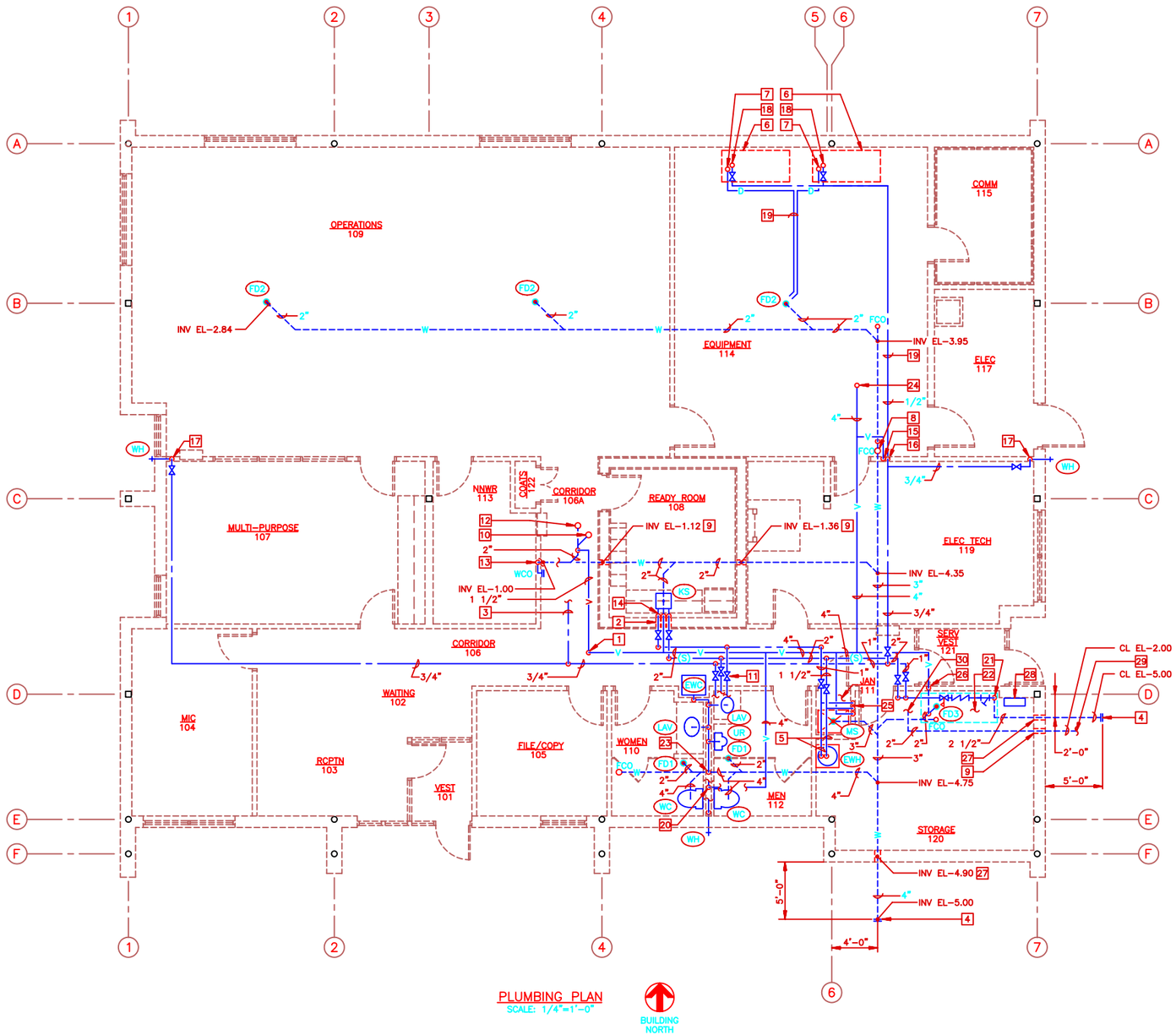

PLUMBING PLAN
SCALE: 1/4"=1'-0"

BUILDING NORTH

0 2' 4' 8' 12'
SCALE: 1/4"=1'-0"

GENERAL PLUMBING NOTES

1. FOR DRAWING LIST AND ABBREVIATIONS, SEE DWG I01.
2. PIPE ELEVATIONS ARE REFERENCED TO FINISHED FLOOR ELEVATION OF 0'-0".

NOTES

1. TURN VENT PIPE UP TO ELEVATION ABOVE FLOOR DRAIN RIM.
2. PROVIDE PIPE SLEEVES IN CONCRETE WALL.
3. 1/2"CW UP TO HUMIDIFIER (HU-1). SEE MECHANICAL EQUIPMENT SPACE PLAN, DWG M04 FOR CONTINUATION.
4. SEE SITE PLAN, DWG C02 FOR CONTINUATION.
5. 1"CW(S), 1"HW TO WATER HEATER. SEE ELECTRIC WATER HEATER DETAIL, DWG M02.
6. PACKAGED AIR CONDITIONING UNIT (PAC-1,2).
7. 3/4" DRAIN CONNECTED TO PAC UNIT. ROUTE TO FLOOR DRAIN.
8. RUNNING P-TRAP WITH FLOOR CLEANOUT.
9. PROVIDE PIPE SLEEVE IN FOUNDATION WALL.
10. 2"W UP TO FLOOR DRAIN. SEE MECHANICAL EQUIPMENT SPACE PLAN, DWG M04 FOR CONTINUATION.
11. 3/4"CW, 1 1/2"CW(S), 3/4"HW DOWN IN WALL. SEE COLD AND HOT WATER RISER DIAGRAM, DWG M02 FOR CONTINUATION.
12. 2"W UP TO FCO. SEE MECHANICAL EQUIPMENT SPACE PLAN, DWG M04 FOR CONTINUATION.
13. 2"W DOWN IN WALL.
14. 1/2"CW(S), 1/2"HW, 1 1/2"V DOWN, WITH 2"W TO SINK.
15. 2"V DOWN IN WALL TO RUNNING P-TRAP.
16. 1/2"CW DOWN IN WALL.
17. 3/4"CW DOWN IN WALL TO WALL HYDRANT.
18. CONNECT 1/2"CW TO PACKAGED AIR CONDITIONING UNIT (PAC-1,2).
19. ROUTE PIPING ON CHANNEL WITH HOLDING CLIPS ON CONCRETE SLAB, BELOW ACCESS FLOOR.
20. 4"V DOWN IN WALL.
21. 2"CW UP THROUGH FLOOR. LOCATE TO MISS FOOTING.
22. INDICATES LOCATION FOR FUTURE WATER TREATMENT.
23. 2"W DOWN THROUGH FLOOR.
24. 4"V UP, 4"VTR
25. 3/4"CW(S), 3/4"HW, 2"V DOWN TO MOP SINK.
26. 2"V DOWN IN WALL TO FLOOR DRAIN.
27. PROVIDE PIPE SLEEVE IN THICKENED FOOTING.
28. LANDSCAPE IRRIGATION SYSTEM CONTROLLER.
29. 2"CW TO LANDSCAPE IRRIGATION SYSTEM. SEE IRRIGATION PLAN, DWG M08 FOR CONTINUATION.
30. 2"CW FOR LANDSCAPE IRRIGATION SYSTEM. SEE COLD AND HOT WATER RISER DIAGRAM, DWG M02 FOR CONTINUATION.

NO.	DATE	PREPARED BY	CHECKED BY	PDS APPROVED	ACOR/COTR APPROVED	DESCRIPTION OF REVISION
1	5/12/95	CCT	LLT/DEF	BLR/TLS	FOR/JTS	REVISED PER AS-BUILT CONDITIONS

WFO / NEXRAD PROGRAM
PROJECT NO. GH01

PROGRAM MANAGEMENT SERVICES CONTRACTOR
FLUOR DANIEL
GOULD EVANS ARCHITECTS, P.A.
KANSAS CITY, MO.
U.S.A.

SEPO

DESIGN: R. L. ANDREWS
CHECKED: L.THORNTON
SUPV. ENGR.: D.FULCHER
ENGR/PROJ. MGR.: BLR/TLS
ACOR/COTR: FOR/JTS

SPECIAL ENGINEERING PROGRAM OFFICE (SEPO)
WEATHER FORECAST OFFICE
MOBILE, ALABAMA
PLUMBING PLAN

SIZE	DWG. NO.	CLIN.	REV.
5	M01	GH	1

044131-

FDSP0004 05/09/95 13:03 CCT 1/4=1' KGHNM011

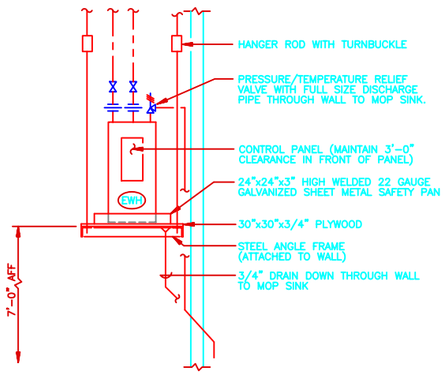

WATER HEATER DETAIL
SCALE: NONE

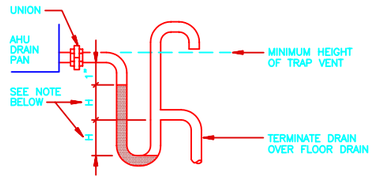

NOTE:
"H" EQUALS THE NEGATIVE ESP ON DRAW-THRU UNITS.

COIL TRAP DETAIL
(DRAW-THRU UNIT)
SCALE: NONE

PLUMBING FIXTURE SCHEDULE

ITEM	FIXTURE	ROUGH-IN SIZES (INCH) HW	CW	V	W	REMARKS
WC	WATER CLOSET	–	1/2"	2"	4"	
UR	URINAL	–	3/4"	1 1/2"	2"	
LAV	LAVATORY	1/2"	1/2"	1 1/2"	1 1/2"	
MS	MOP SINK	3/4"	3/4"	1 1/2"	3"	
KS	KITCHEN SINK	1/2"	1/2"	1 1/2"	1 1/2"	
FD	FLOOR DRAIN	–	–	1 1/2"	2"	
EWC	ELECTRIC WATER COOLER	–	1/2"	1 1/2"	1 1/2"	
WH	NON-FREEZE WALL HYDRANT	–	3/4"	–	–	

PLUMBING LEGEND & SYMBOLS

- COLD WATER (CW)
- HOT WATER (HW)
- (S) SOFTENED WATER (S)
- PIPING BELOW FLOOR
- V VENT (V)
- D DRAIN (D)
- W SOIL OR WASTE (W)
- SHUT-OFF VALVE
- CHECK VALVE
- BACKFLOW PREVENTER
- STRAINER
- PRESSURE REDUCING VALVE
- UNION
- PRESSURE/TEMPERATURE RELIEF VALVE
- M WATER METER
- WATER HAMMER ARRESTOR
- WCO WALL CLEANOUT
- FCO FLOOR CLEANOUT
- VTR VENT THRU ROOF
- FIXTURE DESIGNATION
- A REFERENCE POINT FOR PIPE CONTINUATION

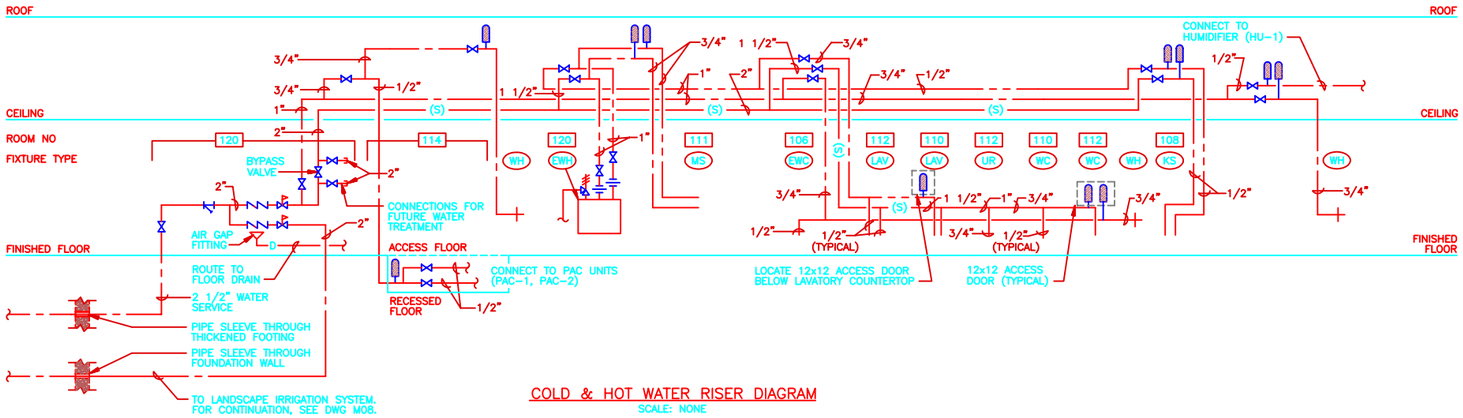

COLD & HOT WATER RISER DIAGRAM
SCALE: NONE

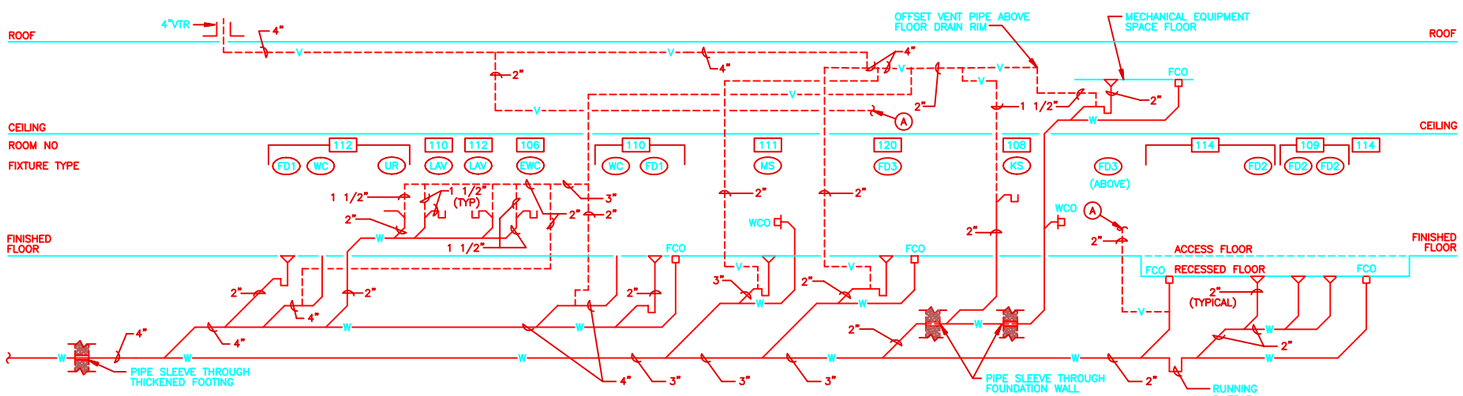

WASTE & VENT RISER DIAGRAM
SCALE: NONE

PLUMBING EQUIPMENT

EWC ELECTRIC WATER COOLER RATED 7.6 GPH OF 50°F WATER WHEN SUPPLIED WITH 80°F WATER AND 90°F AMBIENT TEMPERATURE, 120V/1PH.

EWH ELECTRIC WATER HEATER RATED 3.0 KW, 20 GALLON STORAGE, 12 GAL/HR RECOVERY AT 100°F TEMPERATURE RISE, 277V/1PH.

NO.	DATE	PREPARED BY	CHECKED BY	PM APPROVED	DESCRIPTION OF REVISION
1	5/12/95	CCT	LLT/DEF	BLR/TLS	FOR/JTS REVISED PER AS-BUILT CONDITIONS

WFO / NEXRAD PROGRAM
PROJECT NO. GH01

PROGRAM MANAGEMENT SERVICES CONTRACTOR
FLUOR DANIEL
GOULD EVANS ARCHITECTS, P.A.
KANSAS CITY, MO. U.S.A.

DRAWN: R. L. ANDREWS
CHECKED: L.THORNTON
SUPV. ENGR.: D.FULCHER
ENVR./FIELD MGR.: BLR/TLS
ACOE/CORPS APPROVED: FOR/JTS

SPECIAL ENGINEERING PROGRAM OFFICE (SEPO)
WEATHER FORECAST OFFICE
MOBILE, ALABAMA

PLUMBING DETAILS AND SCHEDULES

044131- | 5 | M02 | GH | 1

FDSP0004 05/09/95 13:03 CCT 12/1=1" KOSHM021

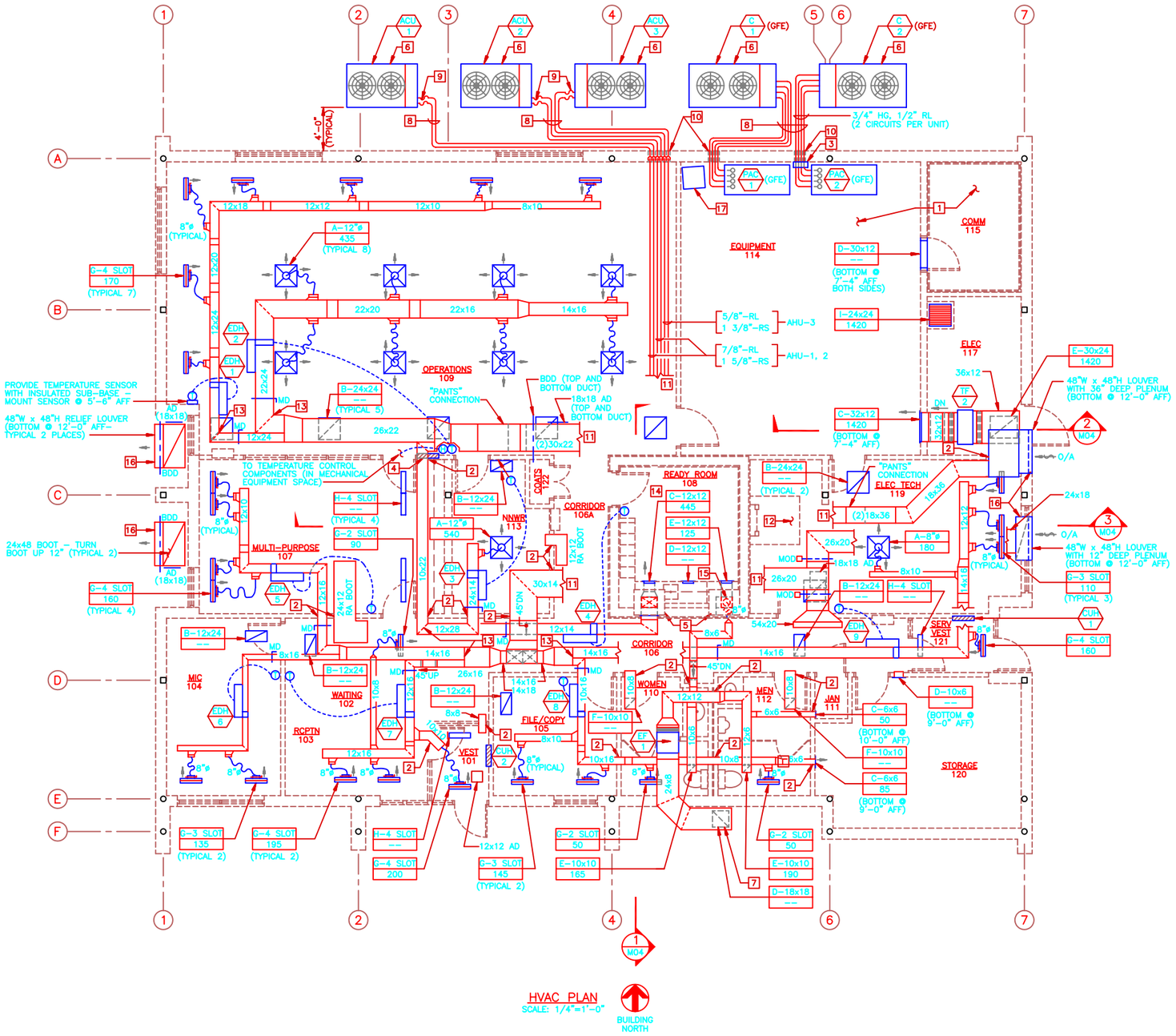

GENERAL HVAC NOTES

1. FOR DRAWING LIST AND ABBREVIATIONS, SEE DWG I01.
2. COORDINATE DIFFUSER LOCATIONS IN LAY-IN CEILING WITH THE REFLECTED CEILING PLAN (DWG A06).

NOTES

1. PROVIDE 14 PERFORATED FLOOR PANELS. INSTALL 12 PANELS IN EQUIPMENT ROOM (114), AND 2 PANELS IN COMMUNICATIONS ROOM (115).
2. DUCT PENETRATION THROUGH SOUND WALL TO BE SEALED AIR TIGHT.
3. REMOTE CONTROL BOX (GFE). SEE PAC UNIT DETAIL, DWG M04.
4. ALARM AND INDICATOR LIGHTS PANEL. SEE WALL ELEVATION ON DWG E10.
5. CONCRETE HOODS (SEE DWG S04).
6. ANCHOR CONDENSING UNITS TO SLAB.
7. PROVIDE GRILLE OF ALUMINUM CONSTRUCTION.
8. PROVIDE CHANNELS 8" HIGH WITH TUBING CLIPS WITH RUBBER ISOLATORS FOR REFRIGERANT LINE SUPPORT. SECURE CHANNELS TO SLAB WITH EXPANSION ANCHORS.
9. FLEXIBLE REFRIGERANT PIPE CONNECTION.
10. PROVIDE PIPE SLEEVES WITH MECHANICAL SEAL FOR REFRIGERANT PIPES.
11. FOR CONTINUATION, SEE MECHANICAL EQUIPMENT SPACE PLAN, DWG M04.
12. ACCESS OPENING IN CEILING (SEE DWG A06).
13. DUCTWORK TO BE WRAPPED WITH EXTERNAL INSULATION FROM THE AIR HANDLING UNIT TO THE POINTS INDICATED ON DRAWINGS.
14. BOTTOM OF GRILLES IN SOFFIT TO BE @ 7'-6" AFF (TYPICAL 3 PLACES).
15. CONNECT 8"ø FLEXIBLE DUCT TO 12x12x24 PLENUM BOX IN SOFFIT.
16. SEAL ALL DUCT JOINTS WATERTIGHT.
17. PROVIDE TEMPERATURE CONTROL TERMINAL ON PORTABLE COMPUTER TABLE WITH CASTERS AND AN ADDITIONAL 25FT OF WIRE COILED BELOW ACCESS FLOOR.

NO.	DATE	PREPARED BY	CHECKED BY	FOR APPROVAL	ACTR/CORR APPROVED	DESCRIPTION OF REVISION
1	5/12/95	CCT	LLT/DEF	BLR/TLS	FOR/JTS	REVISED PER AS-BUILT CONDITIONS

WFO / NEXRAD PROGRAM
PROJECT NO. GH01

PROGRAM MANAGEMENT SERVICES CONTRACTOR
FLUOR DANIEL
GOULD EVANS ARCHITECTS, P.A.
KANSAS CITY, MO. U.S.A.

DESIGN J. MCDONALD
CHECKED L.THORNTON
SUPV. ENGR. D.FULCHER
ENGR/PROJ. MGR. BLR/TLS
ACCPTR./CORR. FOR/JTS

SPECIAL ENGINEERING PROGRAM OFFICE (SEPO)

WEATHER FORECAST OFFICE
MOBILE, ALABAMA

HVAC PLAN

044131-	SIZE 5	DWG. NO. M03	CLIN. GH	REV. 1

FDSP0004 05/09/95 14:42 CCT 1/4=1' KGHM031

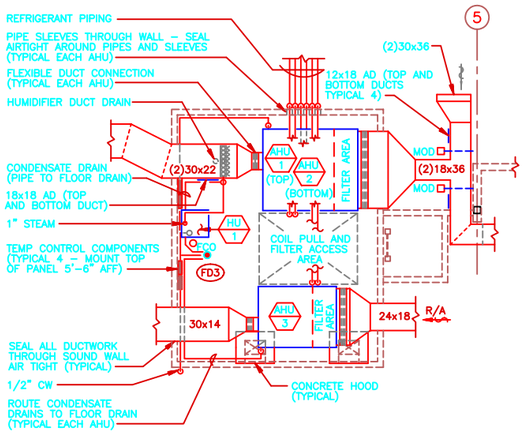

MECHANICAL EQUIPMENT SPACE PLAN
SCALE: 1/4"=1'–0"

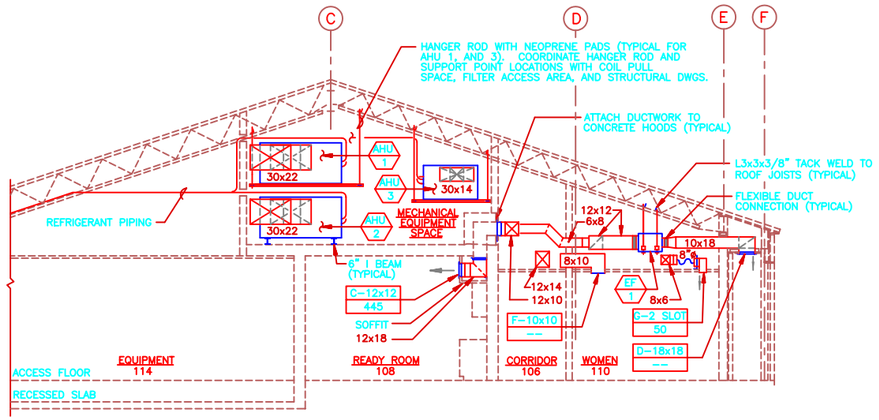

SECTION 1 M03
SCALE: 1/4"=1'–0"

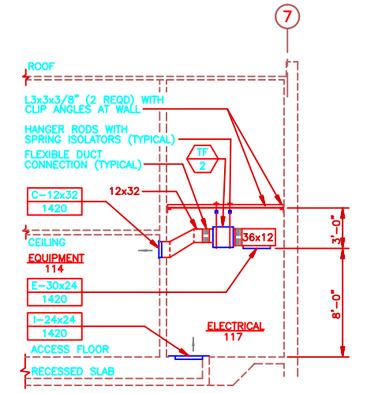

SECTION 2 M03
SCALE: 1/4"=1'–0"

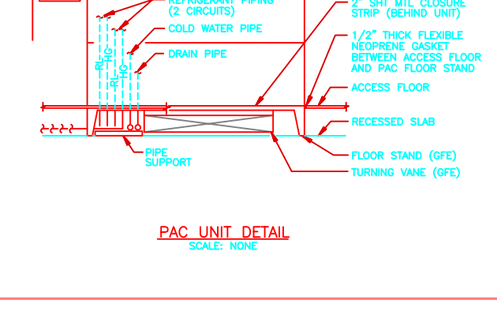

HUMIDIFIER PIPING DETAIL
SCALE: NONE

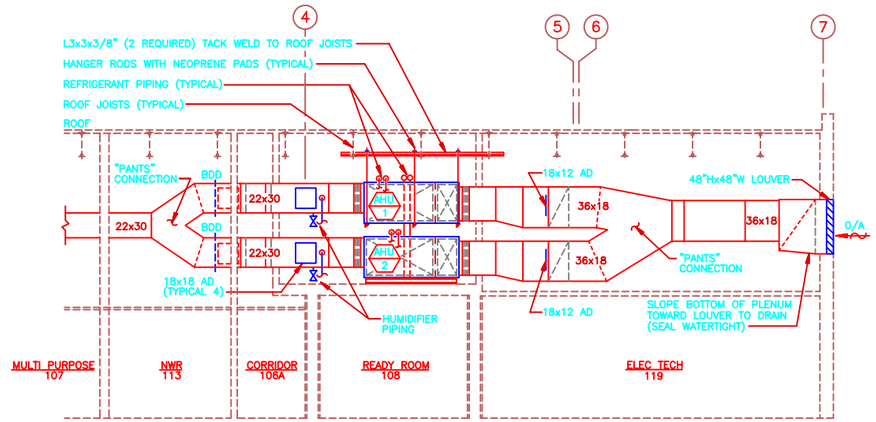

SECTION 3 M03
SCALE: 1/4"=1'–0"

PAC UNIT DETAIL
SCALE: NONE

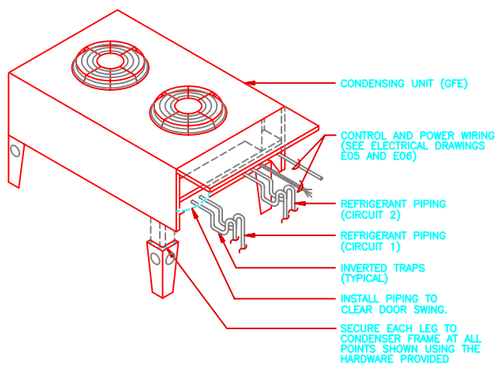

PAC CONDENSING UNIT DETAIL
SCALE: NONE

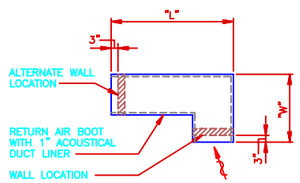

RETURN AIR BOOT SCHEDULE			
RA BOOT SIZE	CFM RANGE	RA BOOT DIMENSIONS	
		"L"	"W"
12x12	0–500	3'–0"	2'–0"
24x12	501–1000	7'–0"	3'–0"
24x24	1001–2000	7'–0"	3'–0"

NOTES:
1. SEE ARCHITECTURAL DRAWINGS FOR SOUND WALL LOCATIONS
2. SEAL WALL PENETRATIONS AIRTIGHT

RA BOOT DETAIL
SCALE: NONE

0 2' 4' 8' 12'
SCALE: 1/4"=1'–0"

NO.	DATE	PREPARED BY	CHECKED BY	AS APPROVED	ACTIL/CODE APPROVED	DESCRIPTION OF REVISION
1	5/12/95	CCT	LLT/DEF	BLR/TLS	FOR/JTS	REVISED PER AS–BUILT CONDITIONS

WFO / NEXRAD PROGRAM
PROJECT NO. GH01

PROGRAM MANAGEMENT SERVICES CONTRACTOR
FLUOR DANIEL GOULD EVANS ARCHITECTS, P.A.
KANSAS CITY, MO. U.S.A.

SPECIAL ENGINEERING PROGRAM OFFICE (SEPO)
WEATHER FORECAST OFFICE
MOBILE, ALABAMA

DRAWN: J. MCDONALD
CHECKED: L.THORNTON
SUPV. ENGR.: D.FULCHER
ENGR./FIELD. MGR.: BLR/TLS
ACOTIL/CODE APPROVED: FOR/JTS

HVAC SECTIONS AND DETAILS

044131– | 5 | M04 | GH | 1

FDSP0004 05/09/95 14:44 CCT 1/4=1' KCGHM041

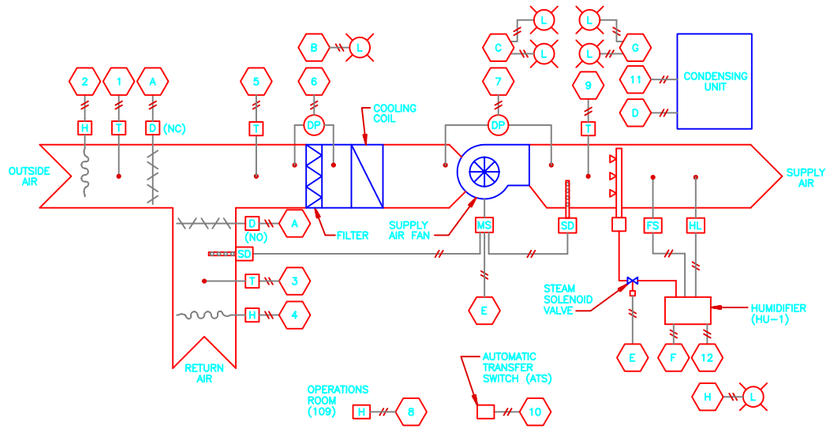

AHU-1, AHU-2 CONTROLS

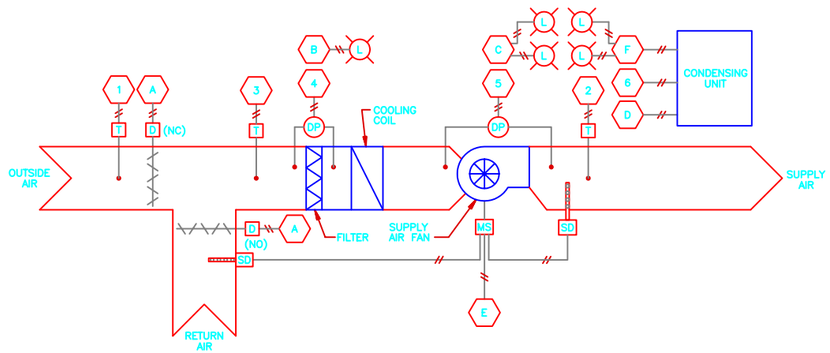

AHU-3 CONTROLS

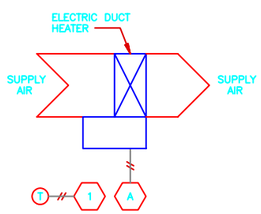

SPACE TEMPERATURE CONTROLS

INPUTS		OUTPUTS	
1	SPACE TEMPERATURE	A	ELECTRIC DUCT HEATER (EDH-1)
.		.	
.		.	
.		.	
9	SPACE TEMPERATURE	I	ELECTRIC DUCT HEATER (EDH-9)

AHU-1, AHU-2 CONTROLS

INPUTS		OUTPUTS	
1	O/A TEMPERATURE	A	O/A, R/A DAMPERS
2	O/A HUMIDITY	B	DIRTY FILTERS
3	R/A TEMPERATURE	C	SUPPLY FAN STATUS
4	R/A HUMIDITY	D	COOLING
5	M/A TEMPERATURE	E	AHU START/STOP
6	FILTER DIFF PRESSURE	F	HUMIDIFIER
7	FAN DIFF PRESSURE	G	CONDENSING UNIT STATUS
8	SPACE HUMIDITY	H	HUMIDIFIER ALARM
9	S/A TEMPERATURE		
10	COMMERCIAL/GENERATOR POWER STATUS		
11	CONDENSING UNIT SAFETIES		
12	HUMIDIFIER STATUS		

AHU-3 CONTROLS

INPUTS		OUTPUTS	
1	O/A TEMPERATURE	A	O/A, R/A DAMPERS
2	S/A TEMPERATURE	B	DIRTY FILTERS
3	M/A TEMPERATURE	C	SUPPLY FAN STATUS
4	FILTER DIFF PRESSURE	D	COOLING
5	FAN DIFF PRESSURE	E	AHU START/STOP
6	CONDENSING UNIT SAFETIES	F	CONDENSING UNIT STATUS

TEMPERATURE CONTROL NOTES

1. THE CONTRACTOR SHALL BE RESPONSIBLE FOR DETAILING THE HVAC CONTROL SYSTEM, POWER WIRING, LOW VOLTAGE CONTROL WIRING, AND CONNECTIONS NECESSARY TO PROVIDE A COMPLETE AND OPERABLE TEMPERATURE AND HUMIDITY CONTROL SYSTEM BASED ON THE SCHEMATIC AND SEQUENCE OF OPERATION AS SHOWN ON THIS DRAWING.
2. THE ALARM AND INDICATION LIGHTS PANEL SHALL BE PROVIDED WITH THE FOLLOWING IDENTIFICATION AND INDICATOR LIGHTS (FOR EACH AHU).

SUPPLY FAN OPERATING	GREEN
SUPPLY FAN FAILURE	RED
CONDENSING UNIT OPERATING	GREEN
CONDENSING UNIT FAILURE	RED
FILTER CHANGE REQUIRED	RED
HUMIDIFIER ALARM	RED

3. ALL 24 VOLT CONTROL WIRING SHALL BE FURNISHED AND INSTALLED BY TEMPERATURE CONTROL CONTRACTOR AND SHALL BE SHIELDED CLASS 2 PLENUM RATED CABLE.
4. ALL 120 VOLT POWER WIRING TO CONTROL PANELS AND MOTOR OPERATED DAMPERS SHALL BE INSTALLED BY THE ELECTRICAL CONTRACTOR (SEE DWG E06).
5. ALL 24 VOLT CONTROL WIRING UNDER THE FLOOR SHALL BE INSTALLED IN CONDUITS BY THE ELECTRICAL CONTRACTOR (SEE DWG E07).
6. SET ROOM TEMPERATURE AT 72°F FOR ALL AREAS SERVED BY AHU-1 AND AHU-2, AND 78°F DURING SUMMER AND 65°F DURING WINTER FOR ALL AREAS SERVED BY AHU-3. SET ROOM HUMIDITY AT 50% RELATIVE HUMIDITY.
7. SET ALTERNATING TIME OF AHU-1 & 2, AND PAC-1 & 2 FOR 84 HOUR INTERVALS.

EQUIPMENT SEQUENCE OF CONTROLS

AIR HANDLING UNIT (AHU-1,2)

AIR HANDLING UNITS 1 & 2 (AHU-1,2) SERVE THE OPERATIONS AREA AND ARE OPERATED ON A 24-HOUR SCHEDULE. ONLY ONE AIR HANDLING UNIT SHALL OPERATE, AND THE NON-OPERATING UNIT SHALL SERVE AS A BACKUP. THE BACK-UP UNIT SHALL BE STARTED AUTOMATICALLY UPON FAILURE OF THE OTHER UNIT. AHU-1 AND 2 SHALL BE PROGRAMMED TO ALTERNATE TO MAINTAIN EQUAL RUN TIME. THE SUPPLY AIR FAN SHALL RUN CONTINUOUSLY. A SUPPLY AIR TEMPERATURE SENSOR SHALL MODULATE THE CONDENSING UNIT (ACU) TO MAINTAIN 55°F DISCHARGE AIR TEMPERATURE. THE SUPPLY AIR TEMPERATURE SHALL BE RESET TO SATISFY THE ROOM TEMPERATURE SENSOR WITH THE MAXIMUM COOLING DEMAND. AN OUTSIDE AIR ECONOMIZER CYCLE SHALL BE PROVIDED WITH ENTHALPY CONTROL. A MIXED AIR TEMPERATURE SENSOR SHALL MODULATE THE OUTSIDE AND RETURN AIR DAMPERS DURING THE ECONOMIZER CYCLE. MINIMUM OUTSIDE AIR SHALL BE PROVIDED WHEN THE UNIT IS NOT IN THE ECONOMIZER CYCLE. HUMIDITY SHALL BE CONTROLLED BY A SPACE HUMIDITY SENSOR. HEATING WILL BE PROVIDED BY INDIVIDUAL ELECTRIC DUCT HEATERS (EDH). SMOKE DETECTORS, IN THE SUPPLY AND RETURN AIR DUCTWORK, SHALL DE-ENERGIZE THE SUPPLY AIR FAN UPON SENSING SMOKE. UPON LOSS OF COMMERCIAL POWER, THE AIR HANDLING UNIT SHALL BE PROGRAMMED FOR A TIMED DELAY RESTART. ELECTRIC DUCT HEATER EDH-2 SHALL NOT OPERATE ON EMERGENCY POWER.

AIR HANDLING UNIT (AHU-3)

AIR HANDLING UNIT 3 (AHU-3) SERVES THE ADMINISTRATION AREA AND OPERATES ON AN 8-HOUR SCHEDULE. PROGRAM NIGHT SETBACK. THE OPERATION OF AHU-3 IS SIMILAR TO AHU-1 AND 2 WITH THE FOLLOWING EXCEPTIONS:
(1) OUTSIDE AIR ECONOMIZER CYCLE IS CONTROLLED BY OUTSIDE AIR TEMPERATURE; AND
(2) NO HUMIDITY CONTROL.
AHU-3, ACU-3 AND ASSOCIATED ELECTRIC DUCT HEATERS SHALL NOT OPERATE ON EMERGENCY POWER. UPON RESTORATION OF COMMERCIAL POWER, AHU-3, ACU-3 AND ASSOCIATED ELECTRIC DUCT HEATERS SHALL RETURN TO NORMAL OPERATING MODE. THE AIR HANDLING UNIT SHALL BE PROGRAMMED FOR A TIMED DELAY RESTART.

ELECTRIC DUCT HEATERS (EDH)

A SPACE TEMPERATURE SENSOR SHALL MODULATE THE ELECTRIC DUCT HEATER WHEN HEATING IS REQUIRED.

PACKAGED AIR CONDITIONING UNITS (PAC-1,2)

THE PAC UNITS (PAC-1,2), CONDENSING UNITS (C-1,2) AND THE REMOTE CONTROL BOX (RCB) ARE GOVERNMENT FURNISHED EQUIPMENT. BOTH PAC UNITS HAVE INTERNAL CONTROLS AND ARE CONNECTED TO THE RCB. THE RCB CONTROLS THE LEAD/LAG SEQUENCING OF THE UNITS TO MAINTAIN EQUAL RUN TIME. A HIGH TEMPERATURE THERMOSTAT IS ALSO CONNECTED TO THE RCB, TO ENERGIZE THE LAG PAC UNIT ON A HIGH SPACE TEMPERATURE SIGNAL. BOTH PAC UNITS WILL BE ABLE TO RUN IN THE NORMAL OPERATION MODE. UPON A SIGNAL FROM THE AUTOMATIC TRANSFER SWITCH (ATS), THE RCB WILL ALLOW ONLY ONE PAC UNIT TO RUN IN THE EMERGENCY OPERATION MODE.

EXHAUST FAN (EF-1)

THE EXHAUST FAN SHALL RUN CONTINUOUSLY.

TRANSFER FAN (TF-2)

THE TRANSFER FAN SHALL RUN CONTINUOUSLY.

HUMIDIFIER (HU-1)

THE HUMIDIFIER SHALL NOT BE ALLOWED TO OPERATE UNLESS THE AIR HANDLING UNIT SUPPLY AIR FAN IS IN OPERATION. AN AIR FLOW SWITCH SHALL DE-ENERGIZE THE HUMIDIFIER UPON LOSS OF AIRFLOW. THE STEAM SOLENOID VALVES SHALL BE INTERLOCKED TO OPEN WHEN THE CORRESPONDING AIR HANDLING UNIT IS IN OPERATION. THE SPACE HUMIDITY SENSOR SHALL MODULATE THE HUMIDIFIER. WHEN THE HUMIDIFIER IS ENERGIZED, THE SUPPLY AIR TEMPERATURE SHALL BE RESET TO 65°F. WHEN THE HUMIDIFIER IS DE-ENERGIZED, SUPPLY AIR TEMPERATURE SHALL BE SET BACK TO 55°F. A SIGNAL FROM THE HIGH-LIMIT HUMIDITY SENSOR SHALL DE-ENERGIZE THE HUMIDIFIER.

CABINET UNIT HEATERS (CUH-1,2)

THE CABINET UNIT HEATERS HAVE SELF CONTAINED CONTROLS. THE THERMOSTATS SHALL BE SET TO MAINTAIN A SPACE TEMPERATURE OF 65°F.

TEMPERATURE CONTROL LEGEND

- T — DUCT TEMPERATURE SENSOR
- FS — AIRFLOW SWITCH
- DP — DIFFERENTIAL PRESSURE SWITCH
- SD — DUCT SMOKE DETECTOR
- HL — HUMIDITY HIGH LIMIT SENSOR
- H — DUCT HUMIDITY SENSOR
- D — MOTOR OPERATED DAMPER (NC – NORMALLY CLOSED) (NO – NORMALLY OPEN)
- L — INDICATOR LIGHT (LOCATED IN ALARM/INDICATION LIGHTS PANEL)
- T — ROOM TEMPERATURE SENSOR
- H — ROOM HUMIDITY SENSOR
- MS — MOTOR STARTER
- TEMPERATURE CONTROL PANEL INPUT OR OUTPUT
- CONTROL WIRING

NO.	DATE	PREPARED BY	CHECKED BY	AS APPROVED	ACCEPTANCE APPROVED	DESCRIPTION OF REVISION
1	5/12/95	CCT	LLT/DEF	BLR/TLS	FOR/JTS	REVISED PER AS-BUILT CONDITIONS

WFO / NEXRAD PROGRAM
PROJECT NO. GH01

PROGRAM MANAGEMENT SERVICES CONTRACTOR
FLUOR DANIEL
GOULD EVANS ARCHITECTS, P.A.
KANSAS CITY, MO.
U.S.A.

DESIGN: R. L. ANDREWS
CHECKED: L.THORNTON
SUPV. ENGR.: D.P.LOCHER
ENGR./FIELD, MGR.: BLR/TLS
ACCEPTANCE: FOR/JTS

SPECIAL ENGINEERING PROGRAM OFFICE (SEPO)
WEATHER FORECAST OFFICE
MOBILE, ALABAMA
HVAC
TEMPERATURE CONTROLS

044131-	SIZE 5	DWG. NO. M05	CURR. GH	REV. 1

FDSP0004 05/09/95 13:05 CCT 12/1=1" KOHM051

AIR HANDLING UNIT SCHEDULE

EQUIP NO	DESCRIPTION	SUPPLY AIR FAN								REFRIGERANT COOLING COIL						FILTERS			ACCESSORIES	REMARKS
		FAN TYPE	TOTAL AIR (CFM)	OUTSIDE AIR (CFM)	TSP (IN WG)	ESP (IN WG)	FAN RPM	FAN HP	POWER	TOTAL CAPACITY (BTU/HR)	SENSIBLE CAPACITY (BTU/HR)	E A T DB (°F)	E A T WB (°F)	STATIC PRESS DROP (IN WG)	ROWS & FINS/IN	TYPE	SP (IN WG) CLEAN	SP (IN WG) DIRTY		
AHU 1	HORIZONTAL DRAW THROUGH	FORWARD CURVED	5,655	680	2.25	.90	1080	5.0	460V/3PH	161,300	131,700	76.3	63.1	.65	6/8	2"–1% PLEATED FILTER	.35	.70	VI	SOUND POWER LEVEL SHALL BE LESS THAN 86dB IN THE 125Hz OCTAVE BAND.
AHU 2	HORIZONTAL DRAW THROUGH	FORWARD CURVED	5,655	680	2.25	.90	1080	5.0	460V/3PH	161,300	131,700	76.3	63.1	.65	6/8	2"–1% PLEATED FILTER	.35	.70	VI	SOUND POWER LEVEL SHALL BE LESS THAN 86dB IN THE 125Hz OCTAVE BAND.
AHU 3	HORIZONTAL DRAW THROUGH	FORWARD CURVED	2,735	400	2.40	.90	1270	3.0	460V/3PH	93,500	74,400	82.2	67.6	.80	6/8	2"–1% PLEATED FILTER	.35	.70	VI	SOUND POWER LEVEL SHALL BE LESS THAN 86dB IN THE 125Hz OCTAVE BAND.

NOTE: PARTICULATE FILTERS RATED AT 0.3 MICRONS IN ACCORDANCE WITH ASHRAE STANDARD 62–89.

AIR COOLED CONDENSING UNIT SCHEDULE

EQUIP NO	NO OF FANS	AMBIENT TEMP (°F)	POWER	FULL LOAD AMPS	MINIMUM CIRCUIT AMPS	ACCESSORIES	REMARKS
ACU 1	2	115	460V/3PH	38.3	46.8	--	
ACU 2	2	115	460V/3PH	38.3	46.8	--	
ACU 3	2	115	460V/3PH	24.2	29.1	--	

GOVERNMENT FURNISHED PACKAGED AIR CONDITIONING UNIT SCHEDULE

EQUIP NO	SUPPLY FAN			COOLING COIL				ELECTRIC REHEAT COIL (kW)	HUMIDIFIER		ELECTRICAL			ACCESSORIES	REMARKS
	AIRFLOW (CFM)	FAN HP	ESP (IN WG)	TOTAL CAPACITY (BTU/HR)	SENSIBLE CAPACITY (BTU/HR)	E A T DB (°F)	E A T (% RH)		CAPACITY (LBS/HR)	ELECTRICAL CAPACITY (kW)	POWER	FULL LOAD AMPS	MINIMUM CIRCUIT AMPS		
PAC 1	5,650	2.0	0.50	120,100	109,500	72.0	50	15.0	11.0	3.6	460V/3PH	33.2	40.7	DDS, FS, HD	DOWNFLOW, NOMINAL 10 TON
PAC 2	5,650	2.0	0.50	120,100	109,500	72.0	50	15.0	11.0	3.6	460V/3PH	33.2	40.7	DDS, FS, HD	DOWNFLOW, NOMINAL 10 TON

NOTE: ALL UNITS HAVE 4"–30% PRE–FILTERS.

CABINET UNIT HEATER SCHEDULE

EQUIP NO	AIRFLOW (CFM)	HEATING (kW)	ACCESSORIES	POWER	REMARKS
CUH 1	100	4.0	DS, T, MS	277V/1PH	SET THERMOSTAT AT 65°F
CUH 2	100	4.0	DS, T, MS	277V/1PH	SET THERMOSTAT AT 65°F

NOTE: SEE ARCHITECTURAL DWGS FOR EXACT MOUNTING HEIGHTS AND LOCATIONS.

GOVERNMENT FURNISHED AIR COOLED CONDENSING UNIT SCHEDULE

EQUIP NO	NUMBER OF FANS	AMBIENT TEMP (°F)	ELECTRICAL			ACCESSORIES	REMARKS
			POWER	FULL LOAD AMPS	MINIMUM CIRCUIT AMPS		
C 1	2	105	460V/3PH	4.4	5.0	FSC, DS	
C 2	2	105	460V/3PH	4.4	5.0	FSC, DS	

DIFFUSER SCHEDULE

SYMBOL	DIFFUSER TYPE	FACE TYPE	FACE SIZE	REMARKS
A	CEILING SUPPLY	LOUVERED	12x12 or 24x24	
B	CEILING RETURN	PERFORATED	12x24 or 24x24	
C	SIDEWALL SUPPLY	DOUBLE DEFLECTION	SEE PLANS	
D	SIDEWALL RETURN	FIXED LOUVER	SEE PLANS	PROVIDE ALUMINUM CONSTRUCTION ON ALL EXTERIOR GRILLES AS INDICATED ON PLANS.
E	SIDEWALL/CEILING EXHAUST	FIXED LOUVER	SEE PLANS	
T	TRANSFER GRILLE	FIXED LOUVER	SEE PLANS	PROVIDE GRILLE WITH TRANSFER BOOT AND 1" ACOUSTICAL DUCT LINING.
G	CEILING SLOT SUPPLY	LINEAR	2'–0" LONG	SEE FLOOR PLAN FOR NUMBER OF 3/4" SLOTS.
H	CEILING SLOT RETURN	LINEAR	2'–0" LONG	SEE FLOOR PLAN FOR NUMBER OF 3/4" SLOTS.
F	FLOOR GRILLE	FIXED BAR	SEE PLANS	

NOTE: SEE ARCHITECTURAL REFLECTED CEILING PLAN FOR EXACT DIFFUSER LOCATIONS AND CEILING TYPES.

ELECTRIC DUCT HEATER SCHEDULE

EQUIP NO	HEATING CAPACITY (kW)	AIRFLOW (CFM)	E A T DB(°F)	SP (IN WG)	POWER	STEPS	ACCESSORIES	REMARKS
EDH 1	17.5	1190	55.0	0.05	460V/3PH	2	FS, DS	
EDH 2	50.0	3480	55.0	0.05	460V/3PH	3	FS, DS	
EDH 3	8.0	540	55.0	0.05	460V/3PH	2	FS, DS	
EDH 4	7.0	445	55.0	0.05	460V/3PH	2	FS, DS	
EDH 5	10.0	640	55.0	0.05	460V/3PH	2	FS, DS	
EDH 6	4.0	270	55.0	0.05	277V/1PH	2	FS, DS	
EDH 7	10.0	680	55.0	0.05	460V/3PH	2	FS, DS	
EDH 8	7.0	475	55.0	0.05	460V/3PH	2	FS, DS	
EDH 9	10.0	670	55.0	0.05	460V/3PH	2	FS, DS	

NOTE: MAINTAIN 3'–0" CLEARANCE IN FRONT OF ELECTRICAL CONTROL PANEL.

FAN SCHEDULE

EQUIP NO	FAN TYPE	DRIVE TYPE	AIRFLOW (CFM)	TOTAL STATIC PRESS (IN/WG)	MAXIMUM FAN HP	POWER	ACCESSORIES	REMARKS
EF 1	INLINE CENTRIFUGAL	DIRECT	530	0.50"	1/6	120V/1PH	BDD, VI, ESC, DS	4.0 SONES
EF 2	INLINE CENTRIFUGAL	DIRECT	1420	.375"	1/2	120V/1PH	VI, ESC, DS	6.0 SONES

HUMIDIFIER SCHEDULE

EQUIP NO	DESIGN CAP (LBS/HR STEAM)	ELECTRICAL	kW	ACCESSORIES	REMARKS
HU 1	48.0	460V/3PH	16.6	FS, HL	20.0 NOMINAL AMPS

HVAC ABBREVIATIONS

ACU	AIR COOLED CONDENSING UNIT
AD	ACCESS DOOR
AFF	ABOVE FINISHED FLOOR
AHU	AIR HANDLING UNIT
BDD	BACKDRAFT DAMPER
C	CONDENSER
CUH	CABINET UNIT HEATER
DDS	DOOR INTERLOCKED DISCONNECT SWITCH
DS	DISCONNECT SWITCH
EDH	ELECTRIC DUCT HEATERS
EF	EXHAUST FAN
ESC	ELECTRONIC SPEED CONTROL
FM	OPTIONAL FAN MOTOR
FS	FLOOR STAND, FLOW SWITCH
FSC	FAN SPEED CONTROL (–20° AMBIENT)
FTU	FAN TERMINAL UNIT
GFE	GOVERNMENT FURNISHED EQUIPMENT
HD	HEAT DETECTOR
HEM	HIGH EFFICIENCY MOTORS
HU	HUMIDIFIER
IGV	INLET GUIDE VANES
MS	2" DEEP SEMI–RECESSED MOUNTING SLEEVE
PAC	PACKAGED AIR CONDITIONING UNIT
T	INTEGRAL THERMOSTAT
TF	TRANSFER FAN
VAV	VARIABLE AIR VOLUME UNIT
VI	VIBRATION ISOLATORS

HVAC LEGEND

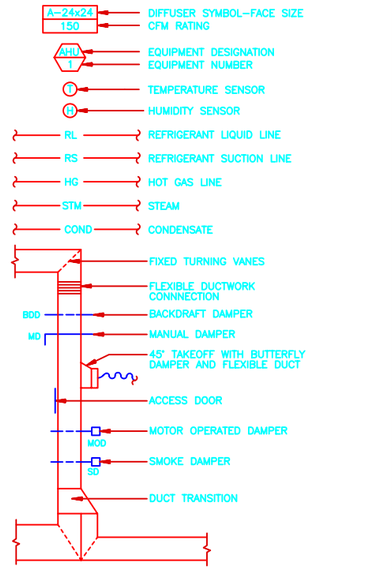

NO.	DATE	PREPARED BY	CHECKED BY	PE APPROVED	ACTR./CONTR. APPROVED	DESCRIPTION OF REVISION
1	5/12/95	CCT	LLT/DEF	BLR/TLS	FGR/JTS	REVISED PER AS–BUILT CONDITIONS

WFO / NEXRAD PROGRAM
PROJECT NO. GH01

SPECIAL ENGINEERING PROGRAM OFFICE (SEPO)

DRAWN: J. MCDONALD
CHECKED: L. THORNTON
SUP'V. ENGR.: D.FULCHER
ENGR/PROJ. MGR.: BLR/TLS
ACOTR./CONTR.: FGR/JTS

WEATHER FORECAST OFFICE
MOBILE, ALABAMA

HVAC SYMBOLS, SCHEDULES AND LEGEND

PROGRAM MANAGEMENT SERVICES CONTRACTOR
FLUOR DANIEL
GOULD EVANS ARCHITECTS, P.A.
KANSAS CITY, MO. U.S.A.

SEPO

SIZE	DWG. NO.	CLIN.	REV.
044131–	5 M06	GH	1

FDSP0004 05/09/95 13:05 CCT 12/1=1" KGHM061

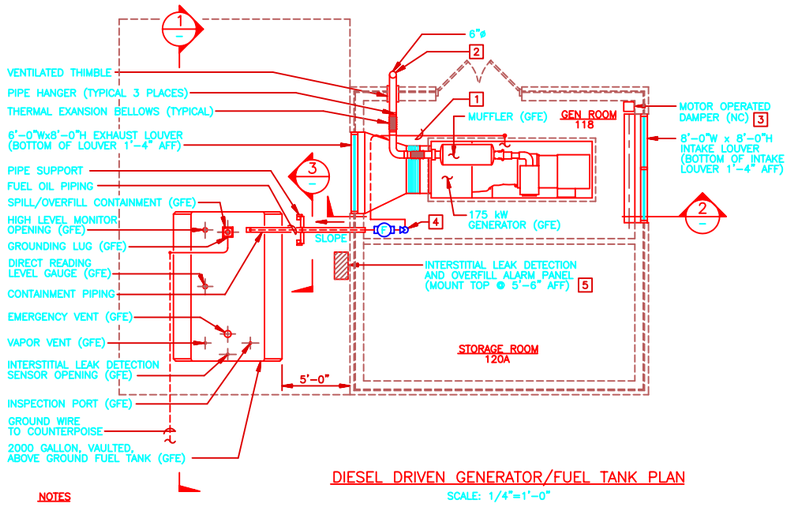

DIESEL DRIVEN GENERATOR/FUEL TANK PLAN

SCALE: 1/4"=1'-0"

NOTES

1. ROUTE FUEL OIL PIPE ON FLOOR WITH CHANNELS AND HOLDER CLIPS. CONNECT TO DAY TANK WITH FLEXIBLE PIPE CONNECTION AND SHUT-OFF VALVE.
2. TURN EXHAUST PIPE UP AND INSTALL RAIN CAP (GFE). TERMINATE EXHAUST PIPE 2'-0" ABOVE PARAPET.
3. MOTOR OPERATED DAMPER (NORMALLY MOTOR CLOSED, SPRING TO OPEN). INTERLOCK DAMPER WITH AUTOMATIC TRANSFER SWITCH (ATS) LOCATED IN THE ELECTRICAL ROOM. THE DAMPER SHALL OPEN WHEN THE GENERATOR IS STARTED.
4. INSTALL FUEL FILTER, THEN ANTI-SYPHON VALVE IN FUEL OIL PIPING AFTER ENTRANCE TO BUILDING WHERE PIPE TURNS DOWN TO FLOOR.
5. ROUTE CONTROL WIRING IN CONDUIT TO ALARM PANEL.

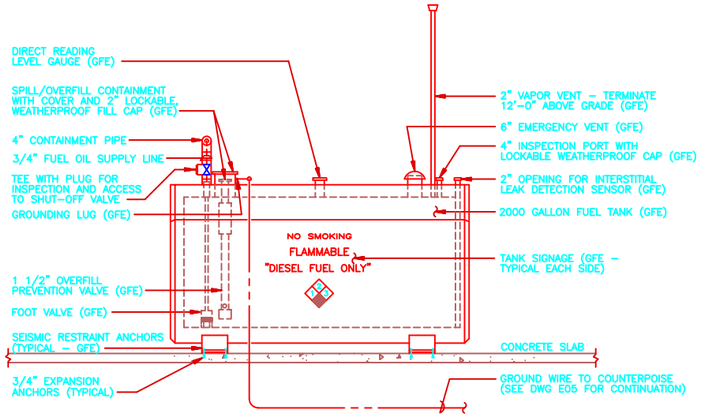

SECTION 1

SCALE: 1/2"=1'-0"

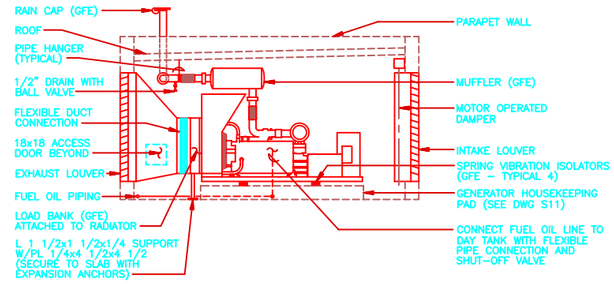

SECTION 2

SCALE: 1/4"=1'-0"

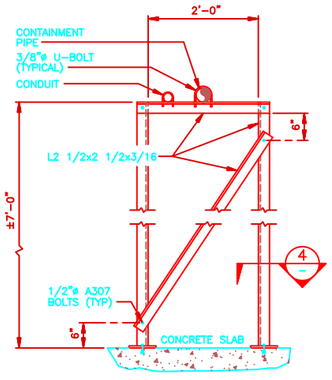

SECTION 3

SCALE: NONE

NOTE

GALVANIZE ALL PIPE SUPPORT COMPONENTS

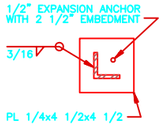

SECTION 4

SCALE: NONE

0 1' 2' 4' 6'
SCALE: 1/2"=1'-0"

0 2' 4' 8' 12'
SCALE: 1/4"=1'-0"

NO.	DATE	PREPARED BY	CHECKED BY	FOR APPROVED	ACCEPTANCE APPROVED	DESCRIPTION OF REVISION
1	5/12/95	CCT	LLT/DEF	BLR/TLS	FOR/JTS	REVISED PER AS-BUILT CONDITIONS

WFO / NEXRAD PROGRAM
PROJECT NO. GH01

PROGRAM MANAGEMENT SERVICES CONTRACTOR
FLUOR DANIEL GOULD EVANS ARCHITECTS, P.A.
KANSAS CITY, MO. U.S.A.

DESIGN J. MCDONALD
CHECKED L.THORNTON
SUPV. ENGR. D.FULCHER
ENVIRONMENTAL ENGR. BLR/TLS
ACCEPTANCE FOR/JTS

SPECIAL ENGINEERING PROGRAM OFFICE (SEPO)

WEATHER FORECAST OFFICE
MOBILE, ALABAMA

DIESEL DRIVEN GENERATOR AND FUEL TANK

DRAWING NO.	SIZE	DWG. NO.	CLIN.	REV.
044131-	5	M07	GH	1

FDSP0004 05/09/95 13:05 CCT 1/4=1' KGHM071

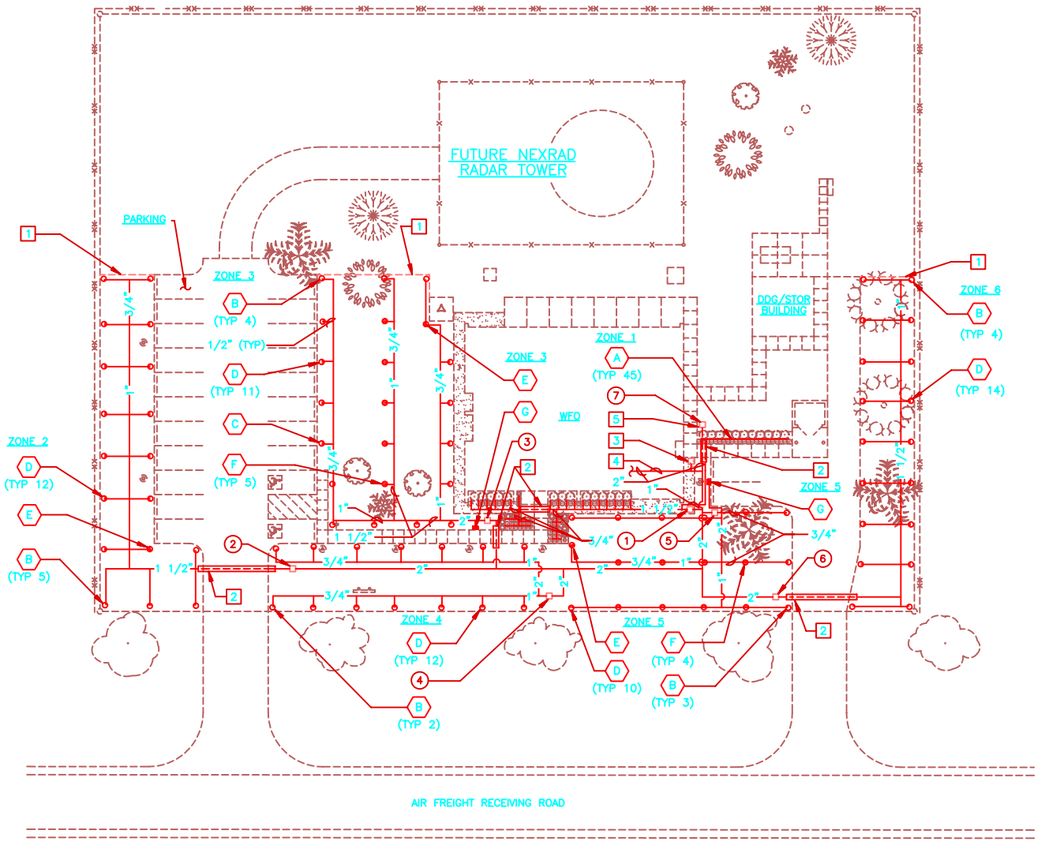

IRRIGATION PLAN
SCALE: 1"=20'

BUILDING NORTH

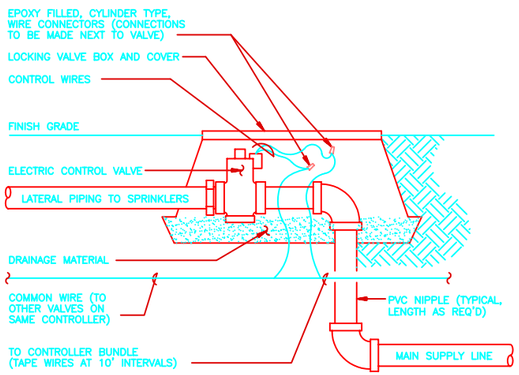

ELECTRIC CONTROL VALVE DETAIL
SCALE: NONE

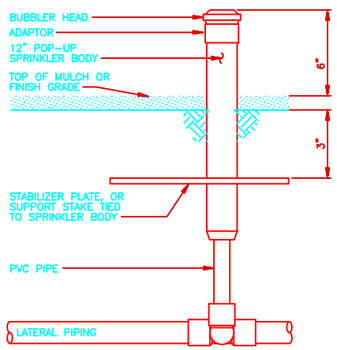

BUBBLER SPRINKLER DETAIL
SCALE: NONE

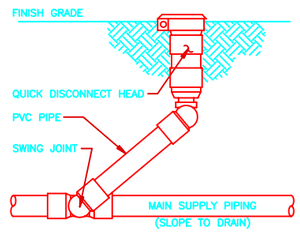

QUICK COUPLING VALVE DETAIL
SCALE: NONE

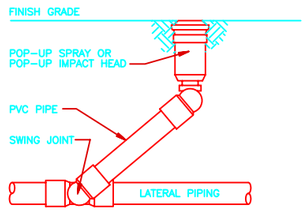

NOTE: SWING JOINT TO BE USED AT ALL TURF AREA POP-UP SPRAY AND POP-UP IMPACT HEADS

POP-UP DETAIL
SCALE: NONE

0 10' 20' 40' 60'
SCALE: 1"=20'

GENERAL IRRIGATION NOTES

1. FOR DRAWING LIST AND ABBREVIATIONS, SEE DWG I01.
2. SEE DWG A01 FOR EXACT PLANTING LOCATIONS.

IRRIGATION PLAN NOTES

1. LIMITS FOR INSTALLING TURF IRRIGATION SYSTEM.
2. PIPE SLEEVING UNDER PAVING OR SIDEWALKS.
3. INSTALL QUICK COUPLING VALVE FOR SYSTEM BLOW-DOWN. SEE DETAIL THIS DRAWING.
4. WATER SUPPLY FOR IRRIGATION SYSTEM. FOR CONTINUATION, SEE DWG M01.
5. INSTALL CONTROL VALVE BOX. CAP PIPE FOR FUTURE USE.

IRRIGATION LEGEND

- CONTROL VALVE
- FILLED AREA DESIGNATES AREA OF COVERAGE
- SPRINKLER HEAD
- C (TYPICAL) — SPRINKLER HEAD DESIGNATION (TYPICAL THIS TYPE PER ZONE)
- 2 — CONTROL VALVE DESIGNATION
- SPRINKLER SYSTEM PIPING
- PIPE SLEEVE

LAWN SPRINKLER HEAD SCHEDULE

DESIGN.	DESCRIPTION	PRESS (PSI)	FLOW (GPM)	THROW PATTERN	REMARKS
A	BUBBLER	30	1.0	---	UMBRELLA (FULL)
B	POP-UP SPRAY	30	0.9	15' RADIUS, 90°	
C	POP-UP SPRAY	30	1.2	15' RADIUS, 135°	
D	POP-UP SPRAY	30	1.9	15' RADIUS, 180°	
E	POP-UP SPRAY	30	2.8	15' RADIUS, 270°	
F	POP-UP SPRAY	30	3.7	15' RADIUS, 360°	
G	POP-UP SPRAY	30	1.7	9'x18' RECTANGLE	

CONTROL VALVE SCHEDULE

ZONE NUMBER	CONTROL VALVE SIZE	FLOW PER ZONE (GPM)	CONTROLLER STEP NUMBER	REMARKS
1	1"	45.0	1	
2	1"	30.1	2	
3	1"	48.7	3	
4	1"	24.6	4	
5	1"	41.0	5	
6	1"	38.2	6	
7	1"	--	7	SPARE

NO.	DATE	PREPARED BY	CHECKED BY	PD APPROVED	ACTR./CORR. APPROVED	DESCRIPTION OF REVISION
1	5/12/95	CCT	LLT/DEF	BLR/TLS	FGR/JTS	REVISED PER AS-BUILT CONDITIONS

WFO / NEXRAD PROGRAM
PROJECT NO. QH01

DRWN: R L ANDREWS
CHECKED: L THORNTON
SUPV. ENGR.: D FLICHER
ENGR/PROJ. MGR.: BLR/TLS
ACCTR./CORR.: FGR/JTS

SPECIAL ENGINEERING PROGRAM OFFICE (SEPO)
WEATHER FORECAST OFFICE
MOBILE, ALABAMA
IRRIGATION PLAN

PROGRAM MANAGEMENT SERVICES CONTRACTOR
FLUOR DANIEL
GOULD EVANS ARCHITECTS, P.A.
KANSAS CITY, MO. U.S.A.

SIZE	DWG. NO.	CLIN.	REV.
044131-	5	M08	GH	1

FDSP0004 05/09/95 13:06 CCT 1=20' KCGHM081

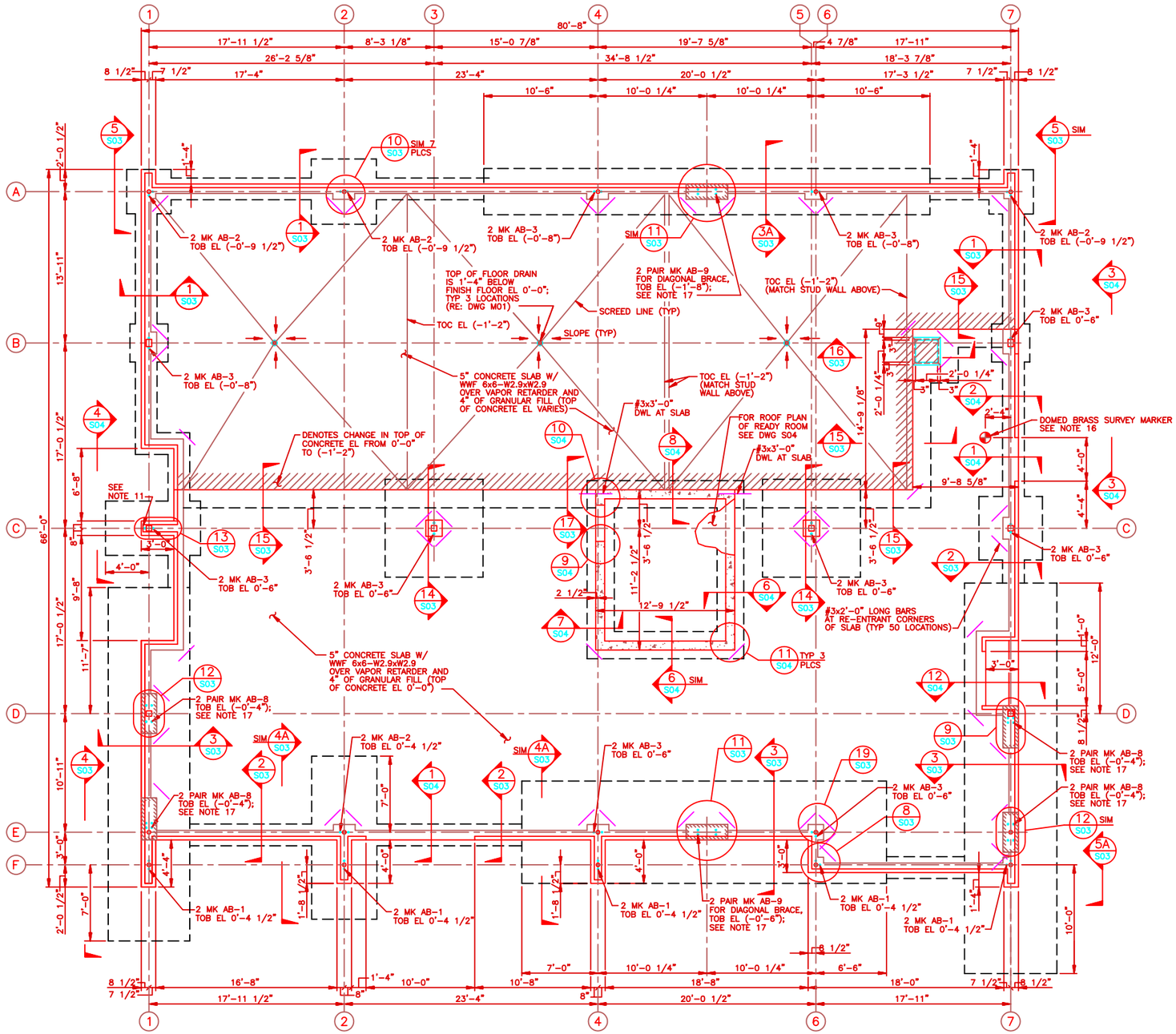

FOUNDATION PLAN
SCALE: 1/4"=1'-0"

BUILDING NORTH

0 2' 4' 8' 12'
SCALE: 1/4"=1'-0"

CONCRETE NOTES

1. ALL CONCRETE SHALL HAVE A MINIMUM COMPRESSIVE STRENGTH OF 4000 PSI AT 28 DAYS UNLESS NOTED OTHERWISE. CONCRETE IN FOOTINGS MAY HAVE A MINIMUM COMPRESSIVE STRENGTH OF 3000 PSI AT 28 DAYS.
2. REINFORCING STEEL SHALL COMPLY WITH ASTM A615, GRADE 60.
3. REINFORCING STEEL SHALL HAVE THE FOLLOWING MINIMUM COVER:

FORMED SURFACES NOT IN CONTACT WITH EARTH	1 1/2"
FORMED SURFACES IN CONTACT WITH EARTH	2"
FOOTINGS CAST DIRECTLY AGAINST EARTH	3"

4. ALL REINFORCING STEEL HOOKS SHOWN ON THE DRAWINGS SHALL BE STANDARD HOOKS AS DEFINED BY ACI 318-89, UNLESS NOTED OTHERWISE.
5. UNLESS NOTED OTHERWISE, MINIMUM LENGTH OF LAP FOR TENSION LAP SPLICES SHALL BE AS FOLLOWS:

BAR SIZE	MINIMUM LENGTH (INCHES)
#3	15
#4	20
#5	26
#6	31

6. REINFORCING STEEL SHALL NOT BE WELDED OR FIELD BENT.
7. WHERE THE SIDES OF FOOTINGS ARE SHOWN CAST DIRECTLY AGAINST THE EARTH, THE CONTRACTOR MAY FORM FOOTINGS AT HIS OPTION.
8. CONCRETE ELEVATIONS SHOWN ON STRUCTURAL DRAWINGS ARE BASED ON A FINISH FLOOR ELEVATION OF 0'-0". FOR ACTUAL FINISH FLOOR ELEVATION SEE DRAWING C03.
9. NORTH ARROWS ON ALL STRUCTURAL DRAWINGS POINT TO BUILDING NORTH. FOR GRID NORTH SEE DRAWING C01.
10. SLAB ON GRADE REINFORCING SHALL BE PLACED 2" BELOW THE TOP OF THE SLAB, UNLESS NOTED OTHERWISE.
11. FIELD CUT FIRST COURSE OF BRICK TO SET ON LEDGE AT END OF PEDESTAL AT COL C-1.
12. SEE DRAWING S08 FOR BRACING CONNECTION DETAILS AT BLOCKOUTS.
13. ALL HORIZONTAL REINFORCING AT WALL INTERSECTIONS AND CORNERS TO HAVE CORNER BARS OF SAME SIZE AND SPACING. SEE TYPICAL CORNER BAR DETAIL ON DRAWING S05.
14. SEE COLUMN FOOTING SCHEDULE ON DRAWING S05 FOR FOOTING SIZES, BEARING ELEVATIONS AND REINFORCING.
15. CONTRACTOR TO COORDINATE PIPE OR CONDUIT PENETRATIONS THROUGH FOUNDATIONS WITH THE ELECTRICAL AND MECHANICAL DRAWINGS. SEE TYPICAL PIPE OR CONDUIT ⊕ FOOTING DETAIL ON DWG S05.
16. DOMED BRASS SURVEY MARKER SHALL BE CAST-IN-PLACE WITH THE SLAB. SEE SPECIFICATION SECTION 03300 FOR OTHER REQUIREMENTS.
17. SHADED AREA DENOTES TOP OF CONCRETE ELEVATION 10 1/2" BELOW ADJACENT SLAB. THIS BLOCKOUT AREA IS TO BE KEPT CLEAN AND FREE OF DEBRIS. BOTTOM SURFACE SHALL BE LEFT ROUGH TO AID IN BONDING WITH THE CONCRETE FILL. AFTER BASE PLATE AND COLUMN ARE SET AT THIS ELEVATION ADDITIONAL CONCRETE SHALL BE PLACED TO MATCH ADJACENT SLAB ELEVATION. PROVIDE 2-#3 TIES TO ENCOMPASS BLOCKOUT AREA USING 2" CLR AROUND PERIMETER. DUE TO THE LENGTH OF THE ANCHOR BOLTS, A PORTION OF THE FOUNDATION FOOTING MAY NEED TO BE BLOCKED OUT TO ELIMINATE INTEFERENCE WHEN THE ANCHOR BOLTS ARE SET INTO PLACE. SEE DWG S06 FOR ANCHOR BOLT DETAILS.
18. ALL CONCRETE TIES SHALL BE OF SEISMIC CONFIGURATION ACCORDING TO ACI-318. THE "A" OR "G" LENGTH FOR #3 TIES IS 5".
19. SEE DWG S06 FOR COLUMN SCHEDULE AND ANCHOR BOLT SCHEDULE.

NO.	DATE	PREPARED BY	CHECKED BY	PIC APPROVED	ACOR/COOR APPROVED	DESCRIPTION OF REVISION
1	5/12/95	CCT	JRF/DGL	BLR/TLS	FGR/JTS	REVISED PER AS-BUILT CONDITIONS

WFO / NEXRAD PROGRAM
PROJECT NO. GH01

SPECIAL ENGINEERING PROGRAM OFFICE (SEPO)

DRAWN: FUENFHAUSEN
CHECKED: J.R. FEAKER
SUP'V. ENGR: D. LOHE
ENGR/PROJ. MGR: BLR/TLS
ACOR/COOR: FGR/JTS

WEATHER FORECAST OFFICE
MOBILE, ALABAMA

FOUNDATION PLAN

PROGRAM MANAGEMENT SERVICES CONTRACTOR
FLUOR DANIEL
GOULD EVANS ARCHITECTS, P.A.
KANSAS CITY, MO. U.S.A.

SEPO

SIZE	DWG. NO.	CLIN.	REV.
044131-	5 S01	GH	1

FDSP0004 05/09/95 11:15 CCT 1/4=1' KOPHS011

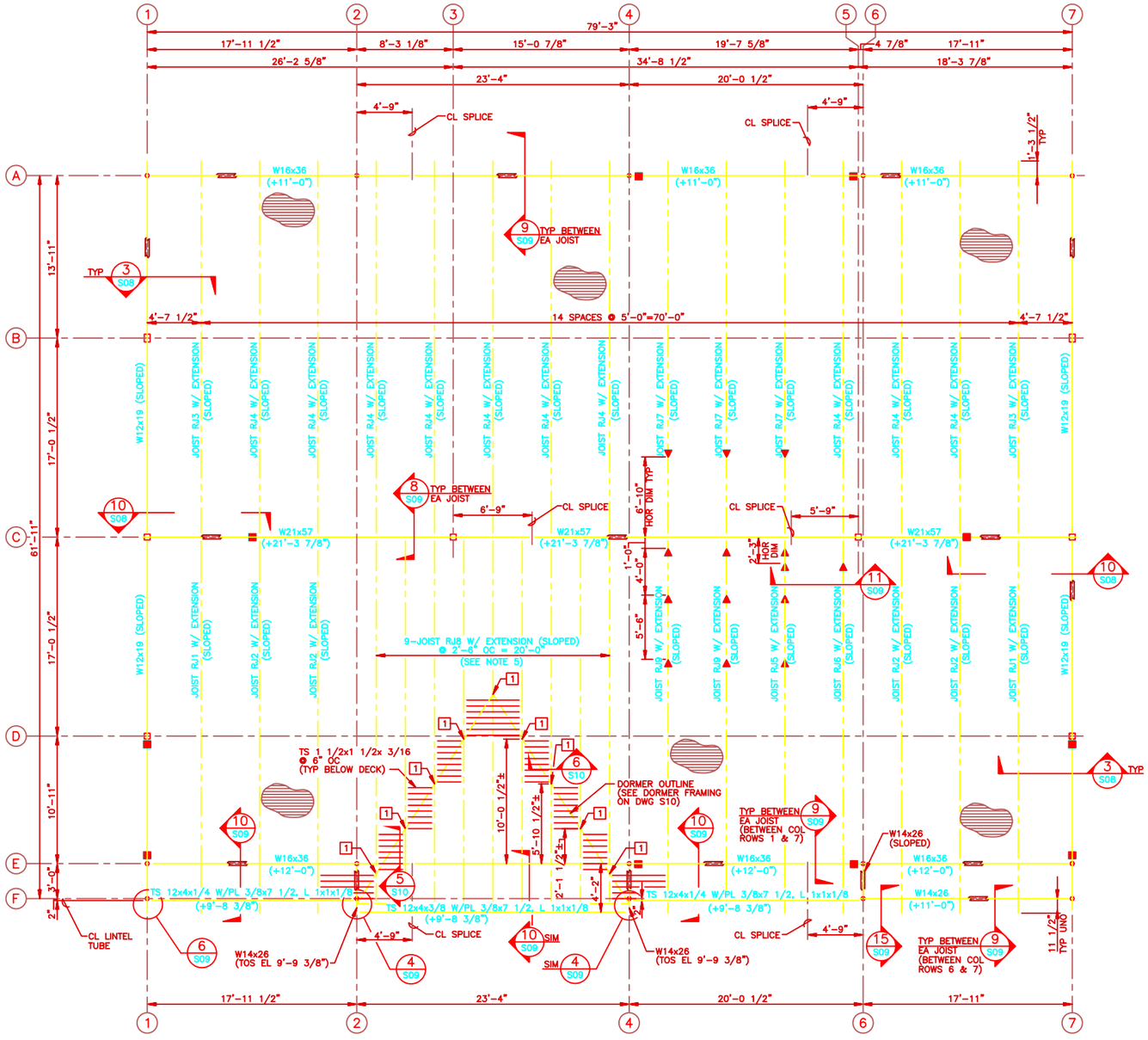

ROOF FRAMING PLAN
SCALE: 1/4"=1'-0"

BUILDING NORTH

0 2' 4' 8' 12'
SCALE: 1/4"=1'-0"

ROOF JOIST LOADING DETAIL

	DEAD + LIVE LOAD	LIVE LOAD	DEAD + WIND LOAD
RJ1 20" MAX DEPTH	F E C: 679 PLF, 467 PLF	F E C: 564 PLF, 352 PLF	F C: −728 PLF
RJ2 RJ5* RJ6* RJ8 RJ9* 20" MAX DEPTH	F E C: 679 PLF, 467 PLF	F E C: 564 PLF, 352 PLF	F C: −728 PLF, −728 PLF, −339 PLF, 6'-8"
RJ3 24" MAX DEPTH	C A: 467 PLF	C A: 352 PLF	C A: −728 PLF
RJ4 RJ7* 24" MAX DEPTH	C A: 467 PLF	C A: 352 PLF	C A: −728 PLF, −728 PLF, −339 PLF, 6'-8"

* ALSO SEE NOTE 2 BELOW

GENERAL NOTES

1. THE DESIGN LOADS FOR THIS BUILDING ARE 70 PSF GROUND SNOW LOAD, 120 MPH EXPOSURE D WIND LOAD, AND SEISMIC ZONE 4 APPLIED ACCORDING TO ESSENTIAL FACILITY REQUIREMENTS OF UBC '91.
2. OPEN WEB STEEL JOISTS DESIGNATED AS RJ1 THRU RJ9 ON ROOF FRAMING PLAN SHALL BE DESIGNED FOR THE ABOVE LOADING AND FIXED POINT LIVE LOADS AS INDICATED ON PLAN BY ▲ (ALSO REFER TO LEGEND). POINT LOADS ARE TO BE APPLIED TO BOTTOM CHORD OF BAR JOIST UNO.
3. JOIST DEFLECTION SHALL NOT EXCEED SPAN/240 FOR THE LIVE LOAD NOR DEAD + WIND LOAD.
4. ABOVE LOADING IS ALSO TO BE APPLIED TO JOIST EXTENSIONS.
5. JOIST EXTENSION/DECKING IS TO BE SUPPORTED ALONG COLUMN ROW F BETWEEN COLUMN ROWS 1 AND 6 BY WALL STUD FRAMING SUPPORTED ON LINTEL BEAMS; AND BETWEEN COLUMN ROWS 6 AND 7 BY WIDE FLANGE. FOR JOIST EXTENSION REQUIREMENTS AT DORMER SEE SECTIONS AND DETAILS ON DWG S10.
6. TOP OF STEEL IS NOTED BY A (+) INDICATING THE DISTANCE ABOVE FLOOR ELEVATION 0'-0".
7. ROOF DECKING SHALL BE 1 1/2" DEEP WITH WIDE RIB CONFIGURATION AND SIZED FOR THE FOLLOWING:

   DEAD + LIVE LOAD = 128 PSF
   DEAD + WIND LOAD = −149 PSF
   LIVE LOAD = 113 PSF
   MAX LIVE LOAD DEFLECTION = SPAN/240
   DIAPHRAGM SHEAR CAPACITY (MIN) = 780 PLF
8. ROOF DECK FASTENING SHALL BE IN ACCORDANCE WITH THE MANUFACTURER'S SPECIFICATIONS TO ACHIEVE THE VERTICAL AND HORIZONTAL DESIGN LOAD REQUIREMENTS. ALL WELDS SHOULD BE MADE BY QUALIFIED WELDERS FOLLOWING AWS D1.3 SPECIFICATIONS.
9. JOIST SEATS ARE TO BE 4 1/2" HIGH AT CL OF SUPPORTING BEAM.
10. TOP CHORD OF ROOF JOIST SHALL BE DESIGNED FOR A 2 KIP AXIAL LOAD FROM SIDEWALL BEAM FLANGE BRACE. REFER TO TYPICAL DETAIL ON DWG S10.
11. ALL OPENINGS IN THE VENEER (DOORS, WINDOWS, AND LOUVERS) SHALL HAVE AN L6x4x3/8 LOOSE LINTEL SPANNING ACROSS THE TOP OF THE OPENING. ALL LINTELS SHALL HAVE A MINIMUM OF 4" OF BEARING AT EACH END.

NOTES

[1] DORMER POINT LOADS APPLIED TO TOP CHORD OF JOISTS:

DEAD + LIVE LOAD = 3 KIPS
LIVE LOAD = 2 KIPS
DEAD + WIND LOAD = −5 KIPS

LEGEND

- INDICATES DIRECTION OF SPAN FOR METAL DECKING.
- ■ INDICATES WIND BRACE CONNECTION BELOW BEAM.
- ○ INDICATES PIPE COLUMNS.
- □ INDICATES TUBE COLUMNS.
- ▲ INDICATES LOCATION OF POINT LIVE LOAD ON BOTTOM CHORD OF BAR JOIST WHICH COULD VARY FROM 0 TO 1000#.

NO.	DATE	PREPARED BY	CHECKED BY	FOR APPROVED	ACTR./CDTR. APPROVED	DESCRIPTION OF REVISION
1	5/12/95	CCT	JRF/DGL	BLR/TLS	FOR/JTS	REVISED PER AS-BUILT CONDITIONS

WFO / NEXRAD PROGRAM
PROJECT NO. GH01

PROGRAM MANAGEMENT SERVICES CONTRACTOR
FLUOR DANIEL GOULD EVANS ARCHITECTS, P.A.
OVERLAND CITY, MO. U.S.A.

SEPO

DRAWN: FUEHNHAUSEN
CHECKED: J.R. FEAKER
SUP'V. ENGR.: D. LOHE
ENGR/PROJ. MGR.: BLR/TLS
ACDTR./CDTR.: FOR/JTS

SPECIAL ENGINEERING PROGRAM OFFICE (SEPO)
WEATHER FORECAST OFFICE
MOBILE, ALABAMA
ROOF FRAMING PLAN

044131-	SIZE 5	DWG. NO. S02	CLIN. GH	REV. 1

FDSP0004 05/09/95 11:15 CCT 1/4=1' KGH5021

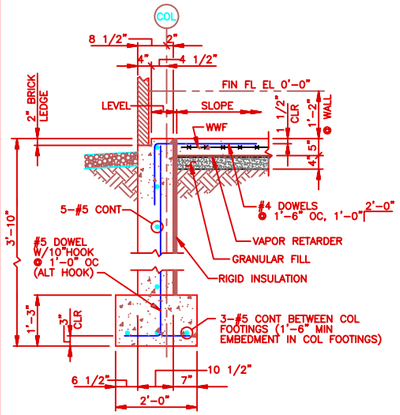

SECTION — SCALE: NONE — 1 / S01 S04

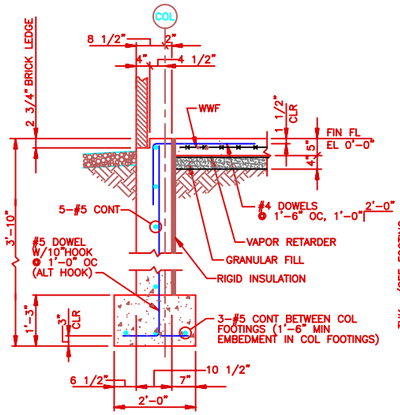

SECTION — SCALE: NONE — 2 / S01 S04

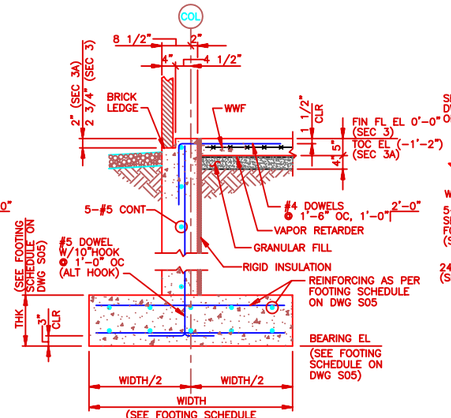

SECTION — SCALE: NONE — 3 / S01 — 3A / S01

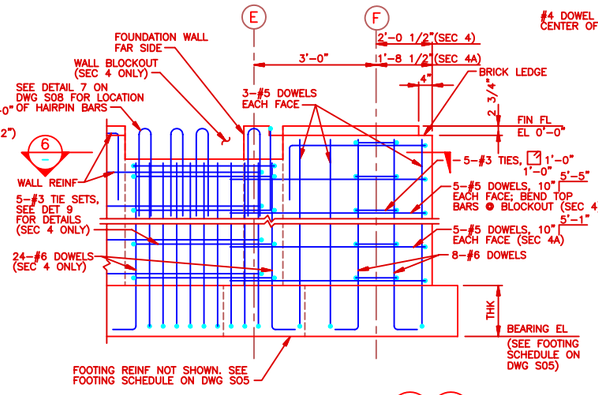

SECTION — SCALE: NONE — 4 / S01 — 4A / S01

NOTE: WORK THIS DETAIL WITH DETAIL 7 (SIM) ON DWG S08

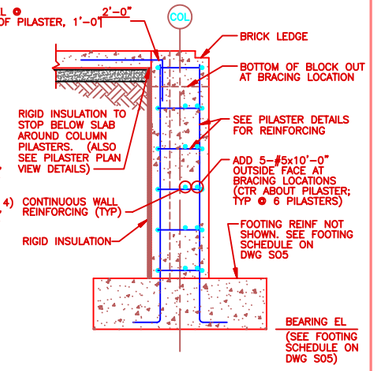

TYPICAL PILASTER SECTION — SCALE: NONE

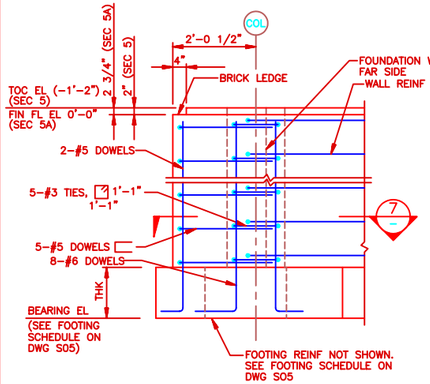

SECTION — SCALE: NONE — 5 / S01 — 5A / S01

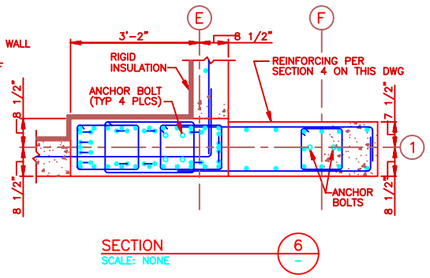

SECTION — SCALE: NONE — 6 / —

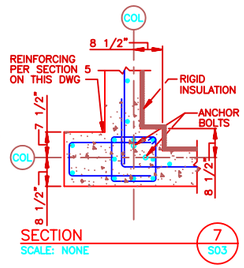

SECTION — SCALE: NONE — 7 / S03

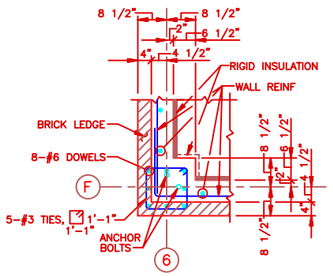

PILASTER DETAIL — DETAIL — SCALE: NONE — 8 / S01

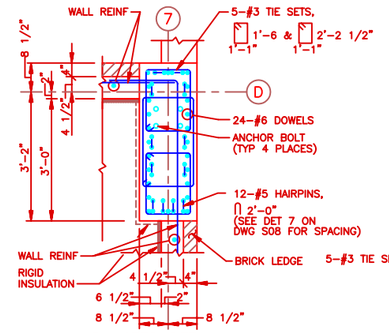

PILASTER DETAIL — DETAIL — SCALE: NONE — 9 / S01

NOTE: WORK THIS DETAIL WITH DETAIL 7 ON DWG S08

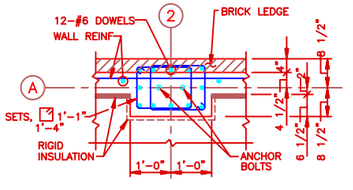

PILASTER DETAIL — DETAIL — SCALE: NONE — 10 / S01

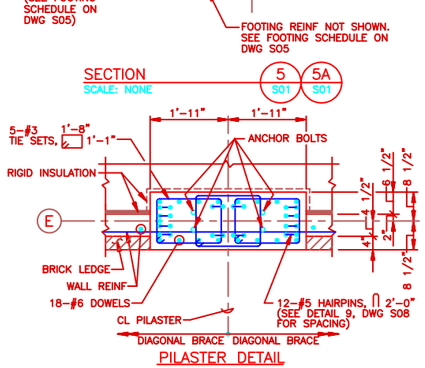

PILASTER DETAIL — DETAIL — SCALE: NONE — 12 / S01

NOTE: WORK THIS DETAIL WITH DETAIL 4 ON DWG S08

PILASTER DETAIL — DETAIL — SCALE: NONE — 11 / S01

NOTE: WORK THIS DETAIL WITH DETAIL 9 ON DWG S08

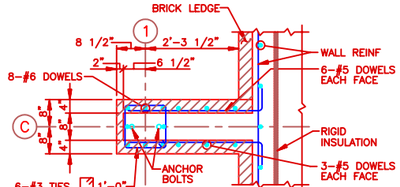

DETAIL — SCALE: NONE — 13 / S01

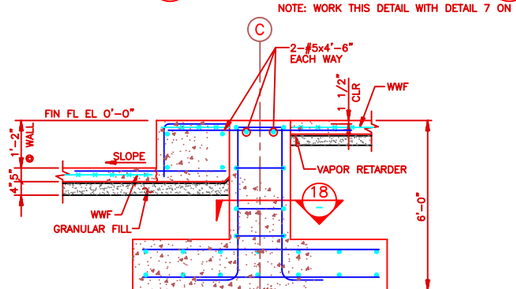

SECTION — SCALE: NONE — 14 / S01

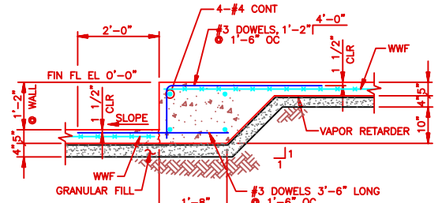

SECTION — SCALE: NONE — 15 / S01

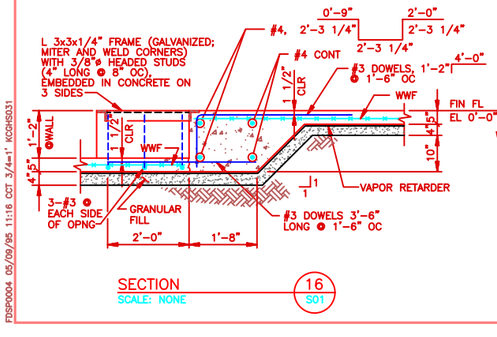

SECTION — SCALE: NONE — 16 / S01

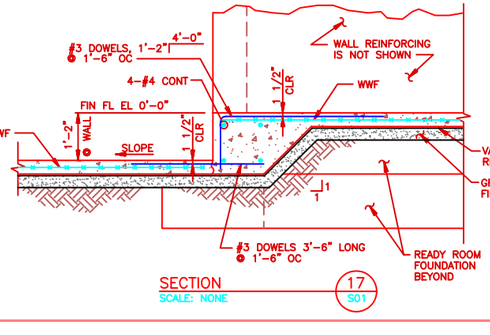

SECTION — SCALE: NONE — 17 / S01

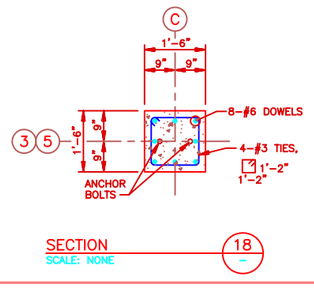

SECTION — SCALE: NONE — 18 / —

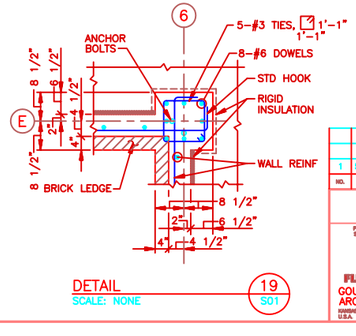

DETAIL — SCALE: NONE — 19 / S01

NO.	DATE	PREPARED BY	CHECKED BY	PIC APPROVED	ACPE/CORR APPROVED	DESCRIPTION OF REVISION
1	5/12/95	CCT	JRF/DGL	BLR/TLS	FGR/JTS	REVISED PER AS-BUILT CONDITIONS

WFO / NEXRAD PROGRAM
PROJECT NO. GH01

Division: FUENFHAUSEN
CHECKED: J.R. FEAKER
SUPV. ENGR.: D. LONE
ENGR/PROJ. MGR.: BLR/TLS
ACOTR./CORR.: FGR/JTS

SPECIAL ENGINEERING PROGRAM OFFICE (SEPO)

WEATHER FORECAST OFFICE
MOBILE, ALABAMA

FOUNDATION SECTIONS AND DETAILS SHT 1 OF 2

PROGRAM MANAGEMENT SERVICES CONTRACTOR
FLUOR DANIEL GOULD EVANS ARCHITECTS, P.A. KANSAS CITY, MO.

SEPO

SIZE	DWG. NO.	CLIN.	REV.
044131-	5	S03	GH	1

FDSP0004 05/09/95 11:16 CCT 3/4=1" KOH5031

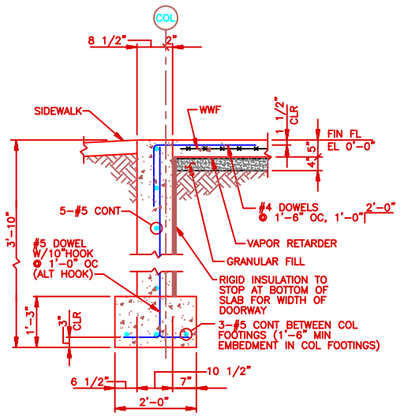

SECTION 1 S01
SCALE: NONE

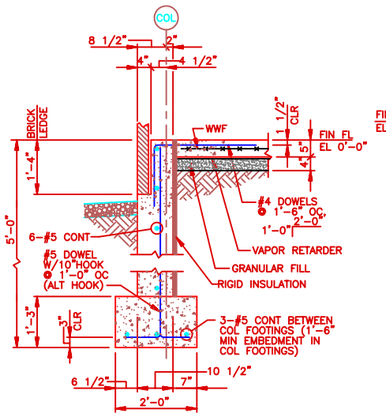

SECTION 2 S01 S04
SCALE: NONE

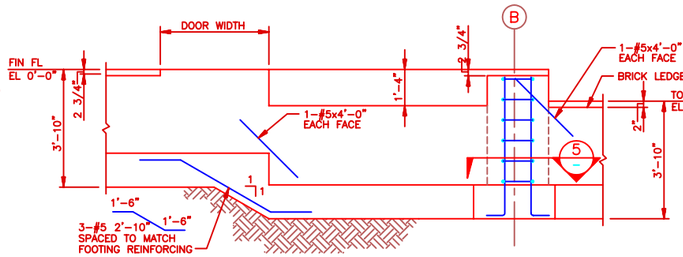

SECTION 3 S01
SCALE: NONE

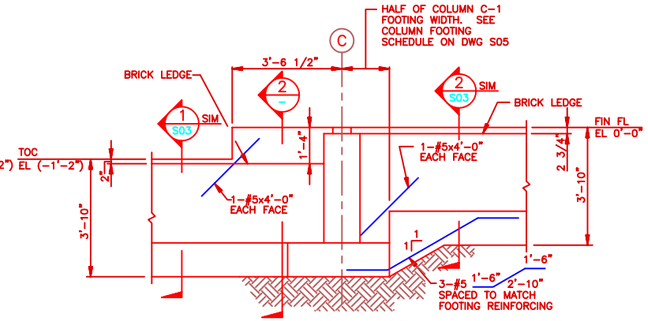

SECTION 4 S01
SCALE: NONE

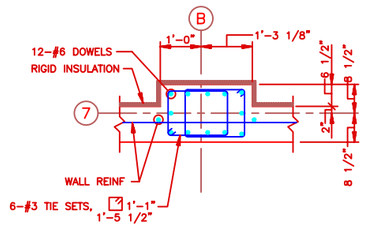

SECTION 5
SCALE: NONE

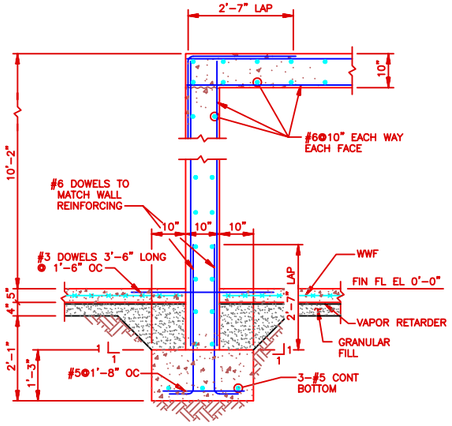

SECTION 6 S01
SCALE: NONE

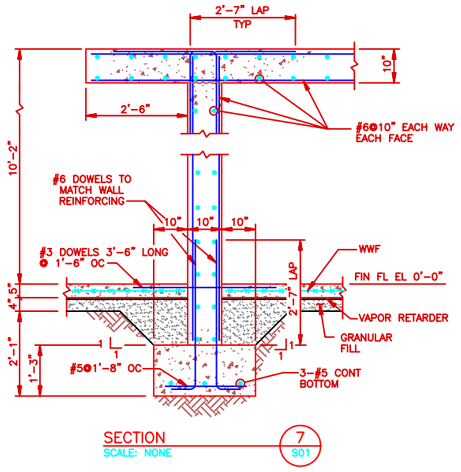

SECTION 7 S01
SCALE: NONE

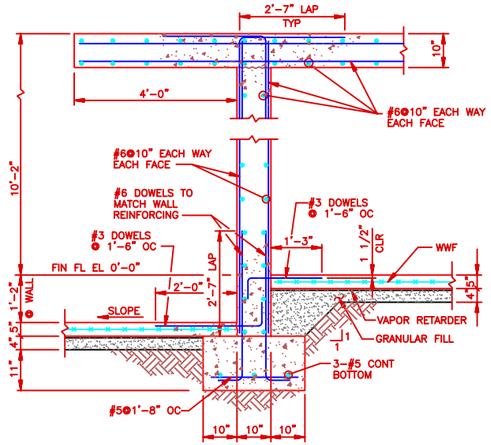

SECTION 8 S01
SCALE: NONE

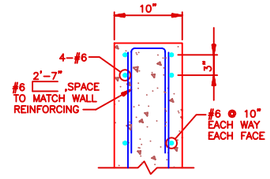

JAMB
NOTE: HEAD IS SIMILAR TO JAMB
DETAIL 9 S01
SCALE: NONE

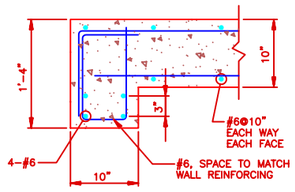

JAMB
DETAIL 10 S01
SCALE: NONE

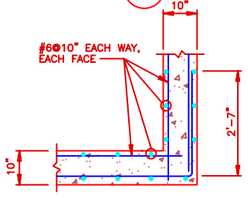

DETAIL 11 S01
SCALE: NONE

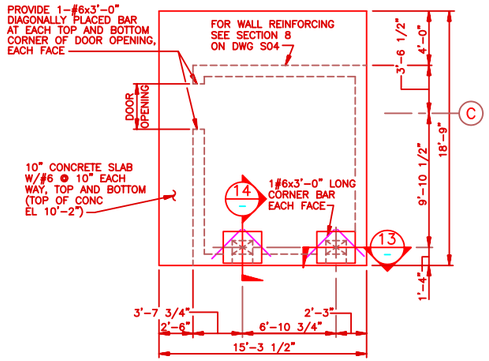

READY ROOM ROOF PLAN
SCALE: 1/4"=1'-0"
(FOR ORIENTATION SEE DWG S01)

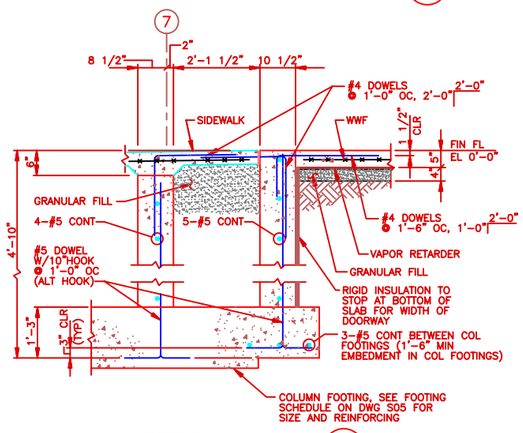

SECTION 12 S01
SCALE: NONE

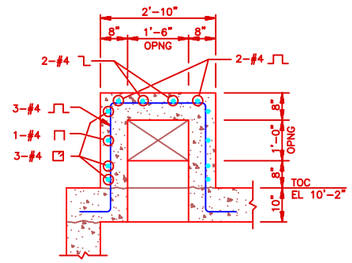

SECTION 13
SCALE: NONE

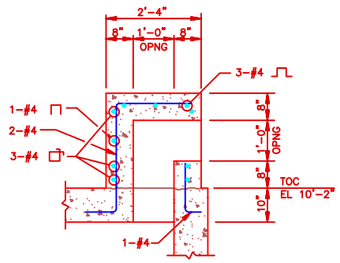

SECTION 14
SCALE: NONE

NO.	DATE	PREPARED BY	CHECKED BY	APPROVED	ACDR./CODR. APPROVED	DESCRIPTION OF REVISION
1	5/12/95	CCT	JRF/DGL	BLR/TLS	FGR/JTS	REVISED PER AS-BUILT CONDITIONS

WFO / NEXRAD PROGRAM
PROJECT NO. GH01

DESIGN FUENHAUSEN
CHECKED J.R. FEAKER
SUPV. ENGR. D. LOHE
ENGR/PROJ. MGR. BLR/TLS
ACDR./CODR. FGR/JTS

SPECIAL ENGINEERING PROGRAM OFFICE (SEPO)

WEATHER FORECAST OFFICE
MOBILE, ALABAMA

FOUNDATION SECTIONS AND DETAILS SHT 2 OF 2

PROGRAM MANAGEMENT SERVICES CONTRACTOR
FLUOR DANIEL GOULD EVANS ARCHITECTS, P.A.
KANSAS CITY, MO. U.S.A.

SCALE: 1/4"=1'-0"

044131-	SIZE 5	DWG. NO. S04	CLN. GH	REV. 1

FDSP0004 05/09/95 11:16 CCT 3/4=1" KOIHS041

COLUMN FOOTING SCHEDULE

LOCATION	FTG SIZE (LG x W x THK)	REINFORCING TOP	REINFORCING BOTTOM	BEARING EL	PILASTER DETAIL	COMMENTS
A-1	4'-1"x4'-1"x1'-3"	5-#4 EW	5-#4 EW	-5'-0"	SEE SEC 5 ON DWG S03	-
A-2	6'-0"x6'-0"x1'-3"	7-#4 EW	7-#4 EW	-5'-0"	SEE DTL 10 ON DWG S03	-
A-4	41'-0 1/2"x4'-3"x1'-6"	9-#5 L 41-#4 T	9-#5 L 41-#4 T	-5'-3"	SIM TO DTL 10 ON DWG S03	PLACE LONGITUDINALLY PER DIMENSIONS ON DWG S01
A-6	SEE A-4	-	-	-	SIM TO DTL 10 ON DWG S03	-
A-7	4'-1"x4'-1"x1'-3"	5-#4 EW	5-#4 EW	-5'-0"	SIM TO SEC 5 ON DWG S03	-
B-1	3'-6"x3'-6"x1'-3"	5-#4 EW	5-#4 EW	-5'-0"	SIM TO DTL 10 ON DWG S03	-
B-7	3'-6"x3'-6"x1'-3"	5-#4 EW	5-#4 EW	-5'-0"	SEE SEC 3 ON DWG S04	-
C-1	8'-9"x5'-0"x1'-3"	6-#4 L 10-#4 T	6-#4 L 10-#4 T	-5'-0"	SEE DTL 13 ON DWG S03	PLACE LONGITUDINALLY PER DIMENSIONS ON DWG S01
C-3	9'-0"x9'-0"x1'-3"	13-#5 EW	13-#5 EW	-6'-0"	SEE SEC 14 ON DWG S03	-
C-5	9'-0"x9'-0"x1'-3"	13-#5 EW	13-#5 EW	-6'-0"	SEE SEC 14 ON DWG S03	-
C-7	6'-0"x6'-0"x1'-3"	7-#4 EW	7-#4 EW	-3'-10"	SIM TO DTL 10 ON DWG S03	-
D-1	32'-6"x7'-6"x1'-9"	23-#5 L 44-#5 T	23-#5 L 44-#5 T	-4'-4"	SEE DTL 12 ON DWG S03	PLACE LONGITUDINALLY PER DIMENSIONS ON DWG S01
D-7	35'-11"x8'-0"x2'-0"	20-#8 L 49-#4 T	20-#8 L 49-#4 T	-4'-7"	SEE DTL 9 ON DWG S03	PLACE LONGITUDINALLY PER DIMENSIONS ON DWG S01
E-1	SEE D-1	-	-	-	SEE SEC 4 ON DWG S03	-
E-2	15'-0"x6'-0"x1'-3"	13-#5 L 18-#4 T	13-#5 L 18-#4 T	-3'-10"	SIM TO DTL 10 ON DWG S03	PLACE LONGITUDINALLY PER DIMENSIONS ON DWG S01
E-4	33'-6 1/2"x9'-5"x1'-9"	28-#5 L 45-#5 T	28-#5 L 45-#5 T	-4'-4"	SIM TO DTL 10 ON DWG S03	PLACE LONGITUDINALLY PER DIMENSIONS ON DWG S01
E-6	SEE E-4	-	-	-	SEE DTL 19 ON DWG S03	-
E-7	SEE D-7	-	-	-	SIM TO DTL 12 ON DWG S03	-
F-1	SEE D-1	-	-	-	SEE SEC 4 ON DWG S03	-
F-2	SEE E-2	-	-	-	SEE SEC 4A ON DWG S03	-
F-4	SEE E-4	-	-	-	SEE SEC 4A ON DWG S03	-
F-6	SEE E-4	-	-	-	SEE DTL 8 ON DWG S03	-
F-7	SEE D-7	-	-	-	SEE SEC 5A ON DWG S03	-

NOTES: 1. FOOTINGS LISTED ON FOOTING SCHEDULE ARE CENTERED ON CENTER LINE OF COLUMN ROWS SHOWN ON DWG S01 UNLESS NOTED OTHERWISE.

2. FOOTING BEARING ELEVATIONS ARE BASED ON FINISH FLOOR ELEVATION OF 0'-0"

3. T DESIGNATES TRANSVERSE REINFORCING
L DESIGNATES LONGITUDINAL REINFORCING
EW DESIGNATES EACH WAY

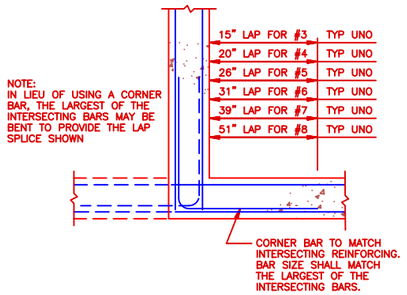

TYPICAL CORNER BAR DETAIL

SCALE: NONE

THE REINFORCING PATTERN SHOWN SHALL BE USED AT ALL CONCRETE CORNERS AND WALL INTERSECTIONS.

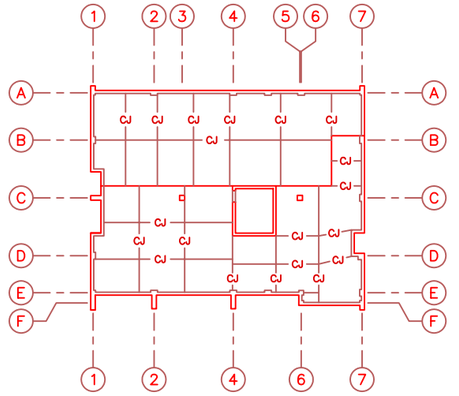

CONTROL JOINT PLAN

SCALE: 1/16"=1'-0"
(FOR BUILDING ORIENTATION SEE DWG C02)

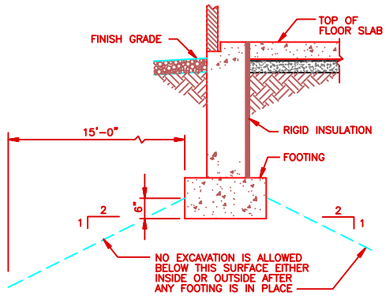

TYPICAL EXCAVATION @ FOOTING DETAIL

SCALE: NONE

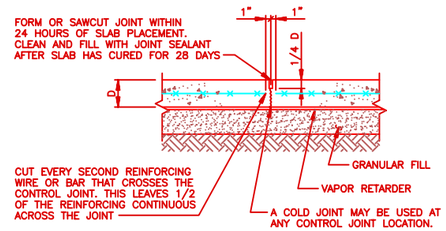

TYPICAL CONTROL JOINT DETAIL

SCALE: NONE

NOTE: DO NOT CUT DIAGONALLY PLACED BARS AT RE-ENTRANT CORNERS.

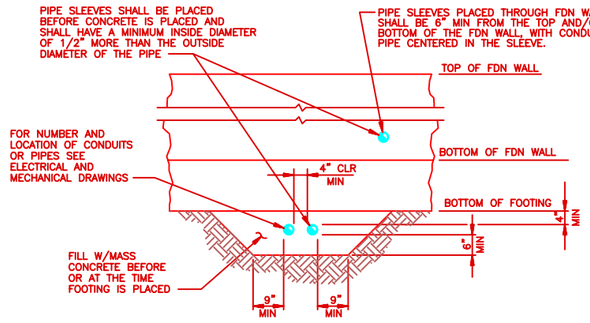

TYPICAL PIPE OR CONDUIT @ FOOTING DETAIL

SCALE: NONE

NOTE: IF CONDUIT OR PIPE IS BELOW FOOTING MORE THAN 3'-0" NO CONCRETE ENCASEMENT IS REQUIRED

0 8' 16' 32' 48'
SCALE: 1/16"=1'-0"

NO.	DATE	PREPARED BY	CHECKED BY	FOR APPROVED	ACTR./COTR. APPROVED	DESCRIPTION OF REVISION
1	5/12/95	CCT	JRF/DGL	BLR/TLS	FOR/JTS	REVISED PER AS-BUILT CONDITIONS

WFO / NEXRAD PROGRAM
PROJECT NO. GH01

PROGRAM MANAGEMENT SERVICES CONTRACTOR
FLUOR DANIEL
GOULD EVANS ARCHITECTS, P.A.
KANSAS CITY, MO. U.S.A.

DESIGN: FUEHRHAUSEN
CHECKED: J.R. FEAKER
SUPV. ENGR.: D. LONE
ENGR/PROJ. MGR.: BLR/TLS
ACOTR./COTR.: FOR/JTS

SPECIAL ENGINEERING PROGRAM OFFICE (SEPO)
WEATHER FORECAST OFFICE
MOBILE, ALABAMA

MISCELLANEOUS CONCRETE DETAILS

SIZE	DWG. NO.	CLIN.	REV.
044131- 5	S05	GH	1

FDSP0004 05/09/95 11:17 CCT 3/4=1" KGH5051

COLUMN SCHEDULE

COLUMN LOCATION	MEMBER SIZE	BOTTOM OF BASE PL EL	ANCHOR BOLT MARK NO	BASE PLATE							REMARKS
				TYPE	SIZE	A	B	C	D	E	
A–1	4"ø STD PIPE	–1'–1"	AB–2	BP–3	3/4"	3"	2"	1"	1 1/16"		
A–2	4"ø STD PIPE	–1'–1"	AB–2	BP–2	1 1/4x6x1'–0"	3"	2"	4"	1 1/16"		
A–4	4"ø DBL X–STRONG PIPE	–1'–1"	AB–3	BP–2	2x6x1'–0"	3"	2"	4"	1 5/16"		
A–6	4"ø DBL X–STRONG PIPE	–1'–1"	AB–3	BP–2	2x6x1'–0"	3"	2"	4"	1 5/16"		
A–7	4"ø STD PIPE	–1'–1"	AB–2	BP–3	3/4"	3"	2"	1"	1 1/16"		
B–1	TS 8x6x3/8	–1'–1"	AB–3	BP–1	1 1/4x6x1'–3"	3"	2"	5 1/2"	1 5/16"		
B–7	TS 8x6x3/8	0'–1"	AB–3	BP–1	1 1/4x6x1'–3"	3"	2"	5 1/2"	1 5/16"		
C–1	TS 6x6x5/16	0'–1"	AB–3	BP–1	1 1/4x6x1'–1"	3"	2"	4 1/2"	1 5/16"		
C–3	TS 6x6x5/16	0'–1"	AB–3	BP–1	1 1/4x6x1'–1"	3"	2"	4 1/2"	1 5/16"		
C–5	TS 6x6x5/16	0'–1"	AB–3	BP–1	1 1/4x6x1'–1"	3"	2"	4 1/2"	1 5/16"		
C–7	TS 6x6x5/16	0'–1"	AB–3	BP–1	1 1/4x6x1'–1"	3"	2"	4 1/2"	1 5/16"		
D–1	TS 6x6x5/16	–0'–9 1/2"	AB–8	–	–	–	–	–	–		SEE DETAIL SHEET S08
D–7	TS 6x6x5/16	–0'–9 1/2"	AB–8	–	–	–	–	–	–		SEE DETAIL SHEET S08
E–1	4"ø DBL X–STRONG PIPE	–0'–9 1/2"	AB–8	–	–	–	–	–	–		SEE DETAIL SHEET S08
E–2	4"ø DBL X–STRONG PIPE	0'–1"	AB–2	BP–2	1 1/4x6x1'–0"	3"	2"	4"	1 1/16"		
E–4	4"ø DBL X–STRONG PIPE	0'–1"	AB–3	BP–2	2x6x1'–0"	3"	2"	4"	1 5/16"		
E–6	4"ø DBL X–STRONG PIPE	0'–1"	AB–3	BP–3	2"	3"	2"	1"	1 5/16"		
E–7	4"ø DBL X–STRONG PIPE	–0'–9 1/2"	AB–8	–	–	–	–	–	–		SEE DETAIL SHEET S08
F–1	4"ø STD PIPE	0'–1"	AB–1	BP–2	1 1/4x6x1'–0"	3"	2"	4"	1 1/16"		
F–2	4"ø STD PIPE	0'–1"	AB–1	BP–2	1 1/4x6x1'–0"	3"	2"	4"	1 1/16"		
F–4	4"ø STD PIPE	0'–1"	AB–1	BP–2	1 1/4x6x1'–0"	3"	2"	4"	1 1/16"		
F–6	4"ø STD PIPE	0'–1"	AB–1	BP–3	3/4"	3"	2"	1"	1 1/16"		
F–7	4"ø STD PIPE	0'–1"	AB–1	BP–3	3/4"	3"	2"	1"	1 1/16"		

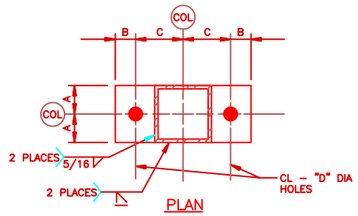

PLAN

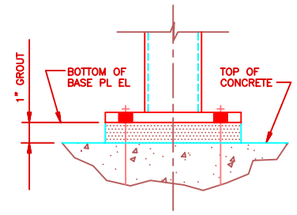

ELEVATION

BASE PLATES TYPE BP–1

SCALE: NONE

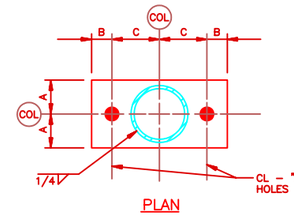

PLAN

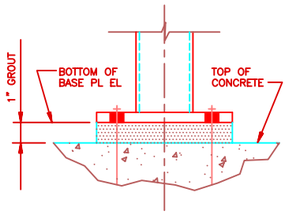

ELEVATION

BASE PLATES TYPE BP–2

SCALE: NONE

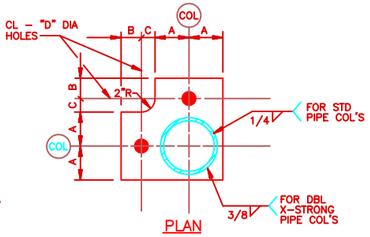

PLAN

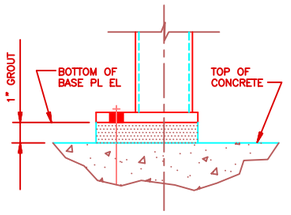

ELEVATION

BASE PLATES TYPE BP–3

SCALE: NONE

ANCHOR BOLT SCHEDULE

MARK	LOCATION	NO	TYPE	TOP OF BOLT EL	PROJ	EMBED–MENT	AB DIAMETER	LENGTH	THREAD	PLATE	SLEEVE DIA	REMARKS
AB–1	COLUMN BASES SEE DWG S01	10	1	SEE DWG S01	0'–4 1/2"	0'–8"	3/4"	–	0'–3 1/2"	1/4"x3"x3"	–	GALVANIZE
AB–2	COLUMN BASES SEE DWG S01	8	3	SEE DWG S01	0'–4 1/2"	2'–2"	3/4"	–	0'–3 1/2"	1/4"x3"x3"	–	GALVANIZE
AB–3	COLUMN BASES SEE DWG S01	20	3	SEE DWG S01	0'–6"	2'–2"	1"	–	0'–5"	1/4"x3"x3"	–	GALVANIZE
AB–4	TRASH ENCLOSURE SEE DWG S13	12	2	–	0'–4"	0'–9"	3/4"	–	0'–4"	–	–	GALVANIZE
AB–5	STUD WALL SEE DWG S10	–	4	VARIES	0'–2"	0'–4"	3/8"	–	0'–2 1/2"	–	–	GALVANIZE
AB–6	STRAP BRACE ANCHOR SEE DWG S11	16	3	SEE DWG S11	0'–5"	2'–2"	1 1/4"	–	0'–5"	1/4"x3"x3"	–	GALVANIZE
AB–7	GENERATOR PAD SEE DWG S11	8	5	SEE DWG S11	0'–3"	0'–10"	1/2"	–	0'–3"	–	–	GALVANIZE
AB–8	COLUMN BASES/ DIAGONAL BRACE SEE DWG S01	16	3	SEE DWG S01	0'–6 1/2"	1'–7 1/2"	1 1/2"	–	0'–5 1/2"	1/4"x3"x3"	–	GALVANIZE; AB PROJ CRITICAL SO AS TO FIT UNDER DIAGONAL BRACE
AB–9	DIAGONAL BRACE SEE DWG S01	8	3	SEE DWG S01	0'–4 1/2"	1'–7 1/2"	3/4"	–	0'–3 1/2"	1/4"x3"x3"	–	GALVANIZE; AB PROJ CRITICAL SO AS TO FIT UNDER DIAGONAL BRACE

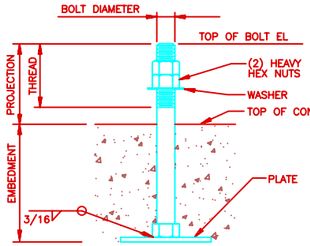

TYPE 1

ANCHOR BOLT DETAIL

SCALE: NONE

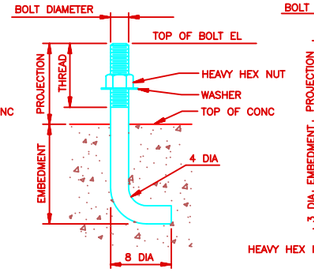

TYPE 2

ANCHOR BOLT DETAIL

SCALE: NONE

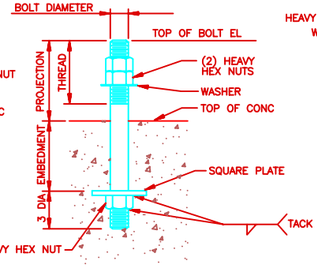

TYPE 3

ANCHOR BOLT DETAIL

SCALE: NONE

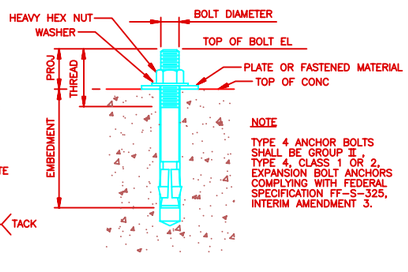

NOTE

TYPE 4 ANCHOR BOLTS SHALL BE GROUP II, TYPE 4, CLASS 1 OR 2, EXPANSION BOLT ANCHORS COMPLYING WITH FEDERAL SPECIFICATION FF–S–325, INTERIM AMENDMENT 3.

TYPE 4

ANCHOR BOLT DETAIL

SCALE: NONE

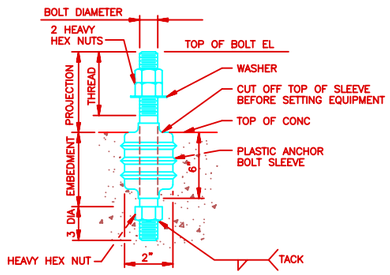

TYPE 5

ANCHOR BOLT DETAIL

SCALE: NONE

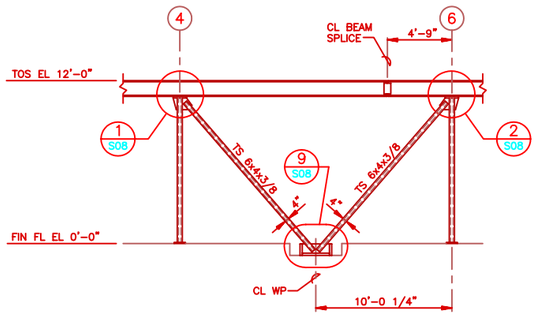

DIAGONAL BRACING ELEVATION @ COLUMN ROW F

SCALE: 1/4"=1'–0"

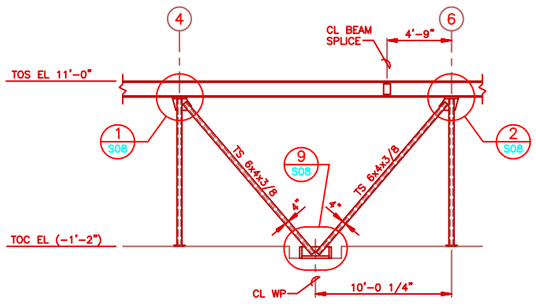

DIAGONAL BRACING ELEVATION @ COLUMN ROW A

SCALE: 1/4"=1'–0"

0 2' 4' 8' 12'

SCALE: 1/4"=1'–0"

NO.	DATE	PREPARED BY	CHECKED BY	PD APPROVED	ACTR/CORR APPROVED	DESCRIPTION OF REVISION
1	5/12/95	CCT	JRF/DGL	BLR/TLS	FOR/JTS	REVISED PER AS–BUILT CONDITIONS

WFO / NEXRAD PROGRAM
PROJECT NO. GM01

PROGRAM MANAGEMENT SERVICES CONTRACTOR
FLUOR DANIEL
GOULD EVANS ARCHITECTS, P.A.
KANSAS CITY, MO. U.S.A.

DRAWN: EUENFHAUSEN
CHECKED: J.R. FEAKER
SUP'L ENGR.: D. LOHE
ENGR/PROJ. MGR.: BLR/TLS
ACCTR./CORR.: FOR/JTS

SPECIAL ENGINEERING PROGRAM OFFICE (SEPO)
WEATHER FORECAST OFFICE
MOBILE, ALABAMA

COLUMN AND ANCHOR BOLT SCHEDULES/FRAMING ELEV

044131–	SIZE 5	DWG. NO. S06	CURR. GH	REV. 1

FDSP0004 05/09/95 11:17 CCT 1/4=1' KGH/S061

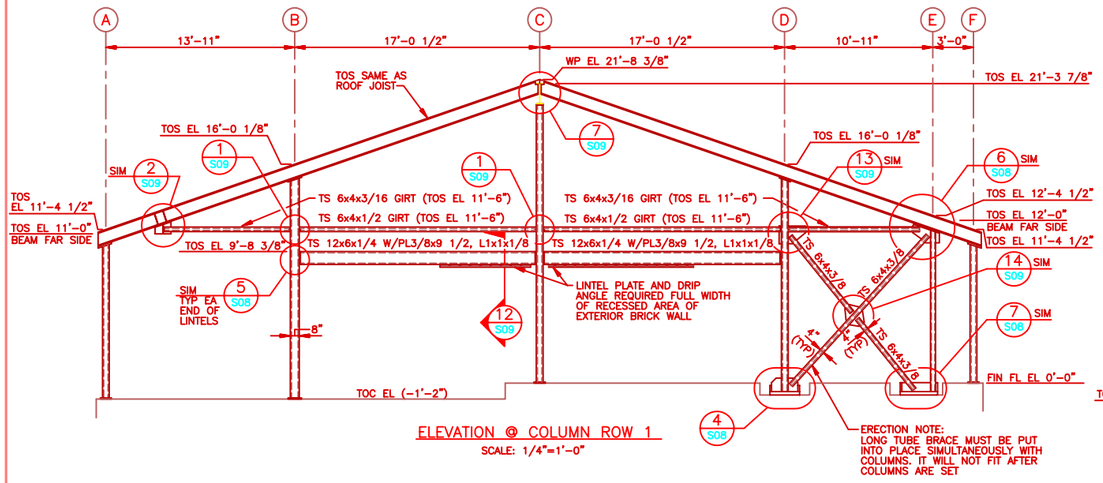

ELEVATION @ COLUMN ROW 1
SCALE: 1/4"=1'-0"

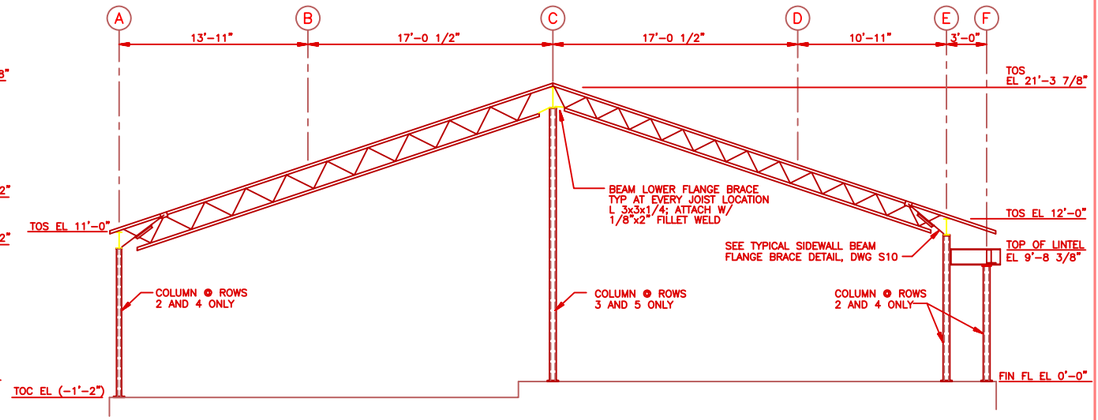

ELEVATION @ COLUMN ROW 2
ELEVATION @ COLUMN ROWS 3, 4 AND 5 SIMILAR
SCALE: 1/4"=1'-0"

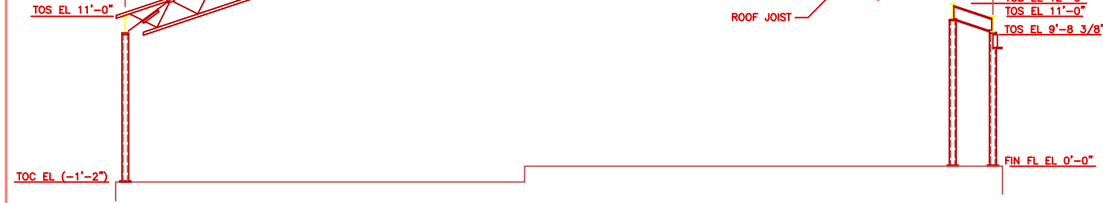

ELEVATION @ COLUMN ROW 6
SCALE: 1/4"=1'-0"

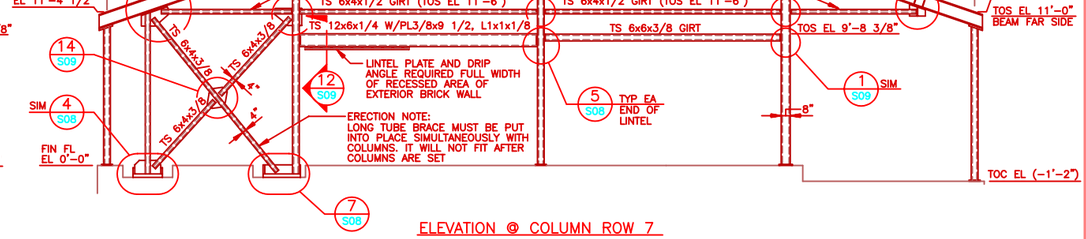

ELEVATION @ COLUMN ROW 7
SCALE: 1/4"=1'-0"

0 2' 4' 8' 12'
SCALE: 1/4"=1'-0"

NO.	DATE	PREPARED BY	CHECKED BY	PDS APPROVED	ACTR/CORR APPROVED	DESCRIPTION OF REVISION
1	5/12/95	CCT	JRF/DGL	BLR/TLS	FOR/JTS	REVISED PER AS-BUILT CONDITIONS

WFO / NEXRAD PROGRAM
PROJECT NO. GH01

SPECIAL ENGINEERING PROGRAM OFFICE (SEPO)

WEATHER FORECAST OFFICE
MOBILE, ALABAMA

FRAMING ELEVATIONS

DESIGN: FUENHAUSEN
CHECKED: J.R. FEAKER
SUPV. ENGR.: D. LOHE
ENGR/PROJ. MGR.: BLR/TLS
ACCPTR./CORR.: FOR/JTS

PROGRAM MANAGEMENT SERVICES CONTRACTOR
FLUOR DANIEL GOULD EVANS ARCHITECTS, P.A.
KANSAS CITY, MO. U.S.A.

SIZE	DRG. NO.	CLIN.	REV.
044131- 5	S07	GH	1

FDSP0004 05/09/95 11:17 CCT 1/4=1' KOHS971

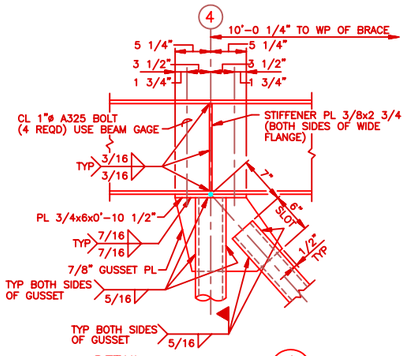

DETAIL 1
SCALE: NONE S06

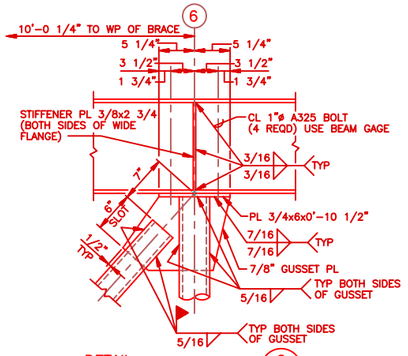

DETAIL 2
SCALE: NONE S06

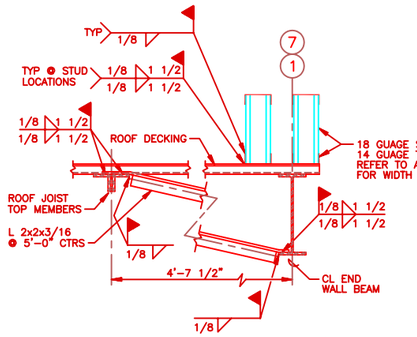

SECTION 3
SCALE: NONE S02

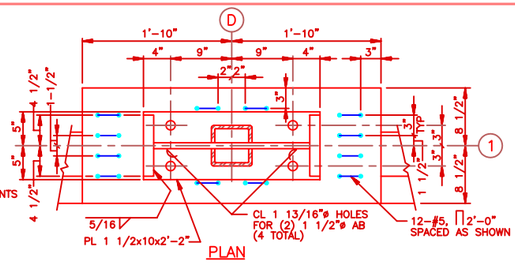

PLAN

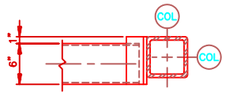

PLAN

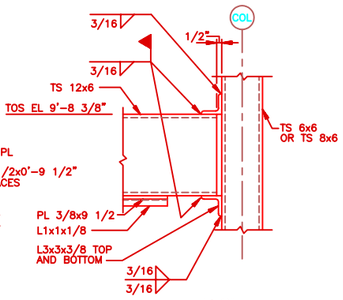

ELEVATION

DETAIL 5
SCALE: NONE S07

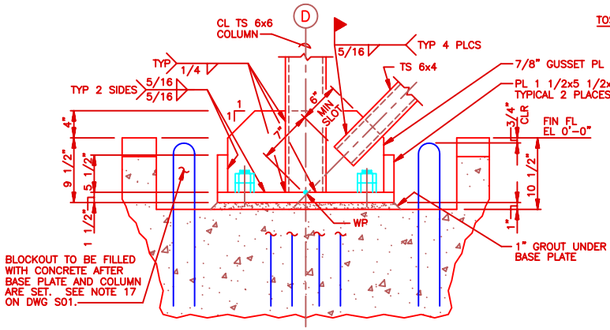

ELEVATION

DETAIL 4
SCALE: NONE S07

NOTE: WORK THIS DETAIL WITH DETAIL 12 ON DWG S03

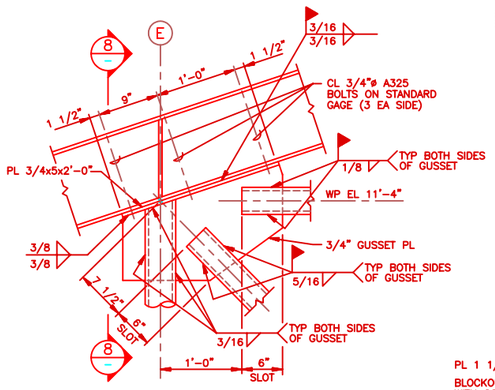

NOTE: TUBE BRACE, GIRT AND PIPE COLUMN SHOULD BE SLOTTED FOR GUSSET PLATE.

DETAIL 6
SCALE: NONE S07

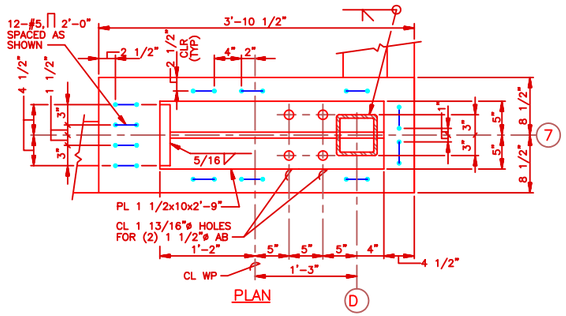

PLAN

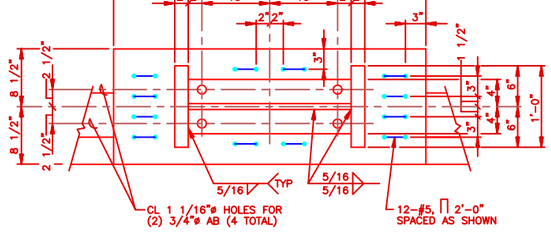

PLAN

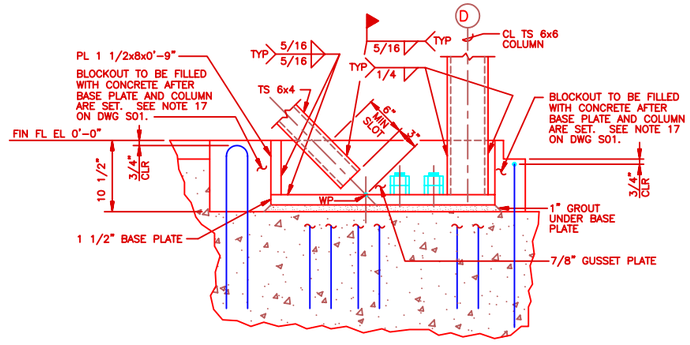

ELEVATION

DETAIL 7
SCALE: NONE S07

NOTE: WORK THIS DETAIL WITH DETAIL 9 ON DWG S03

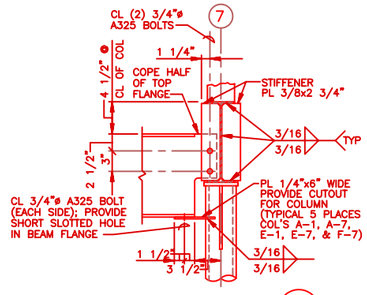

SECTION 8
SCALE: NONE

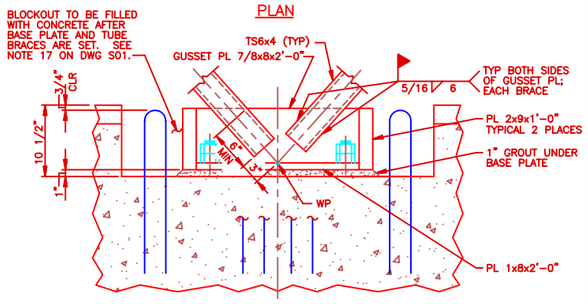

ELEVATION

DETAIL 9
SCALE: NONE S08

NOTE: WORK THIS DETAIL WITH DETAIL 11 ON DWG S03

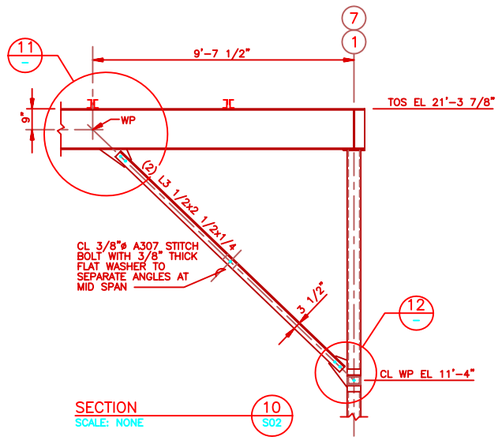

SECTION 10
SCALE: NONE S02

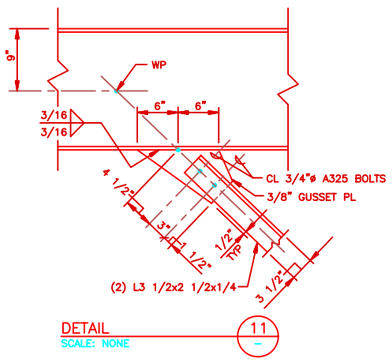

DETAIL 11
SCALE: NONE

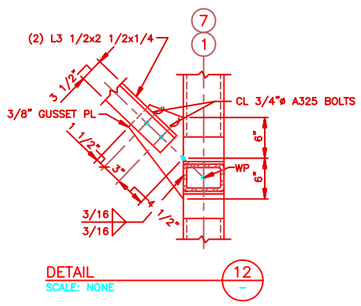

DETAIL 12
SCALE: NONE

NO.	DATE	PREPARED BY	CHECKED BY	APPROVED	DESCRIPTION OF REVISION
1	5/12/95	CCT	JRF/DGL	BLR/TLS	REVISED PER AS-BUILT CONDITIONS

WFO / NEXRAD PROGRAM
PROJECT NO. GH01

DRAWN: FUEHRHAUSEN
CHECKED: LR. FEAKER
SUPV. ENGR.: D. LOHE
ENGR/PROJ. MGR.: BLR/TLS
ACCPS./CONS.: FSR/JTS

SPECIAL ENGINEERING PROGRAM OFFICE (SEPO)

WEATHER FORECAST OFFICE
MOBILE, ALABAMA

FRAMING SECTIONS AND DETAILS SHT 1 OF 3

044131-	SIZE 5	DWG. NO. S08	CUST. GH	REV. 1

PROGRAM MANAGEMENT SERVICES CONTRACTOR
FLUOR DANIEL GOULD EVANS ARCHITECTS, P.A.
KANSAS CITY, MO. U.S.A.

SEPO

FDSP0004 05/09/95 11:18 CCT 3/2=1" KGAHSO81

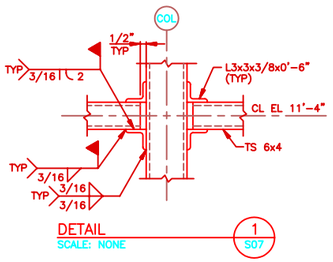

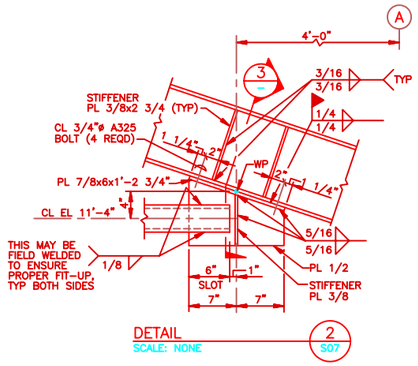

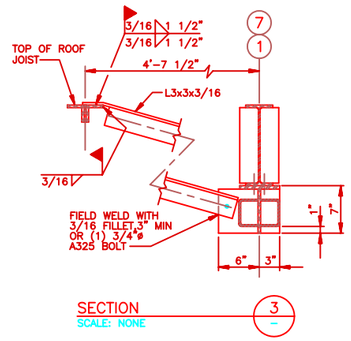

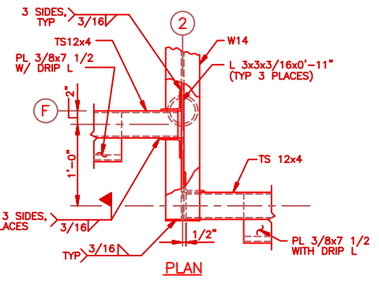

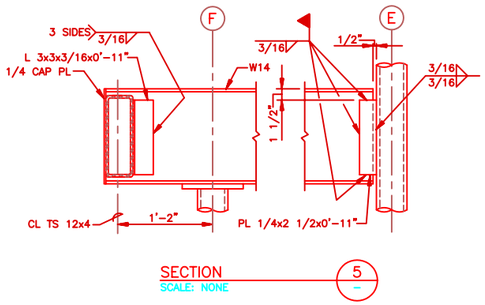

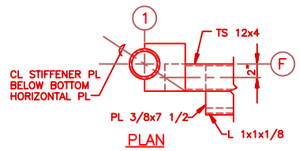

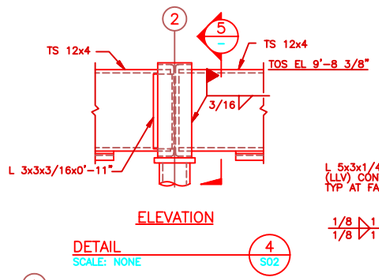

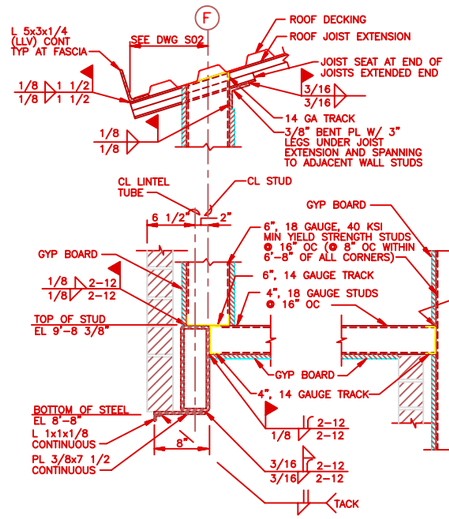

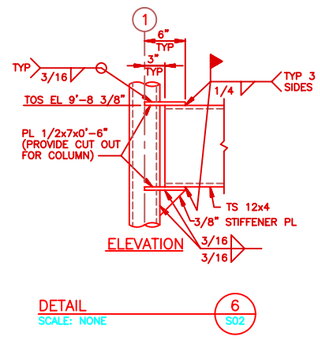

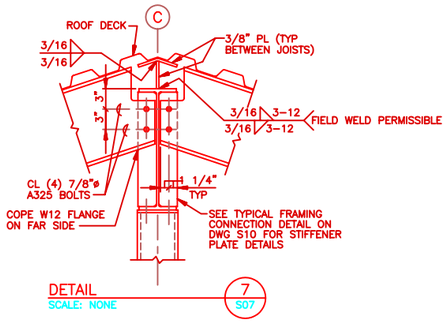

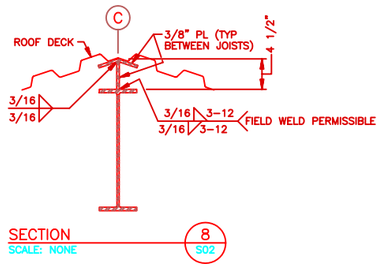

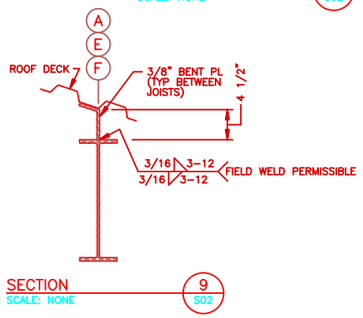

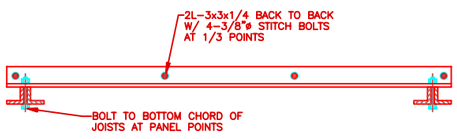

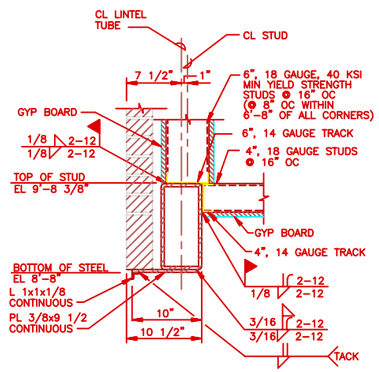

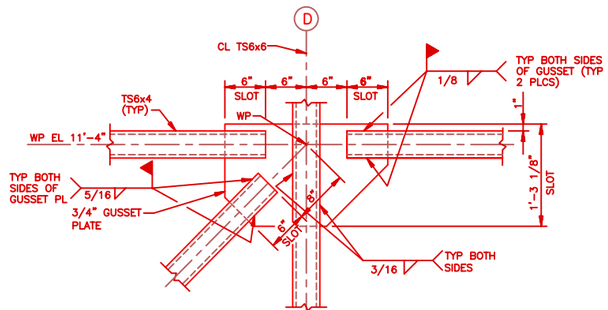

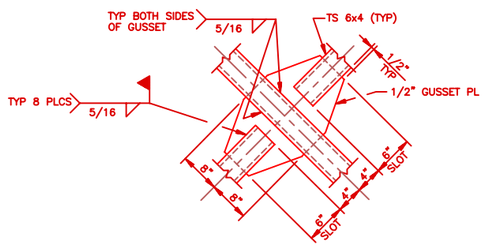

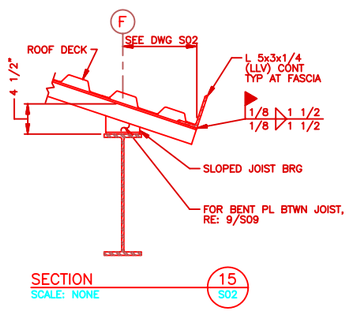

NO.	DATE	PREPARED BY	CHECKED BY	PE APPROVED	ACTR./CONTR. APPROVED	DESCRIPTION OF REVISION
1	5/12/95	CCT	JRF/DGL	BLR/TLS	FOR/JTS	REVISED PER AS-BUILT CONDITIONS

WFO / NEXRAD PROGRAM
PROJECT NO. GH01

DESIGN: FUENFHAUSEN
CHECKED: J.R. FEAKER
SUPV. ENGR.: D. LOHE
ENGR/PHSCL MGR.: BLR/TLS
ACOTR./CONTR.: FOR/JTS

SPECIAL ENGINEERING PROGRAM OFFICE (SEPO)
WEATHER FORECAST OFFICE
MOBILE, ALABAMA

FRAMING SECTIONS AND DETAILS SHT 2 OF 3

PROGRAM MANAGEMENT SERVICES CONTRACTOR
FLUOR DANIEL GOULD EVANS ARCHITECTS, P.A.
KANSAS CITY, MO. U.S.A.

SEPO

044131- | SIZE 5 | DWG. NO. S09 | CLSN. GH | REV. 1

FDSP0004 05/09/95 11:18 CCT 3/2=1" KCGHS091

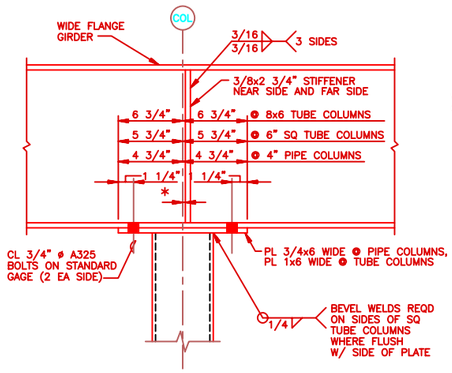

* CENTER THE STIFFENERS ON THE COLUMN UNLESS A BEAM IS FRAMING INTO THE GIRDER AT THE COLUMN. IF A BEAM IS FRAMING INTO THE GIRDER, OFFSET THE STIFFENER 1/2 THE BEAM WEB THICKNESS AND BOLT THE BEAM TO THE STIFFENER.

TYPICAL COLUMN CONNECTION
SCALE: NONE

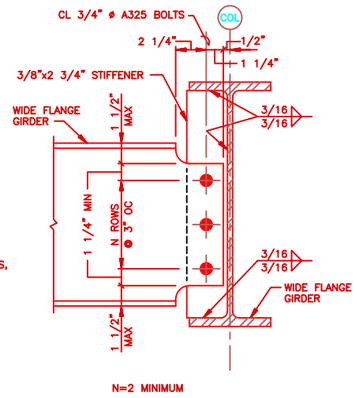

N=2 MINIMUM

TYPICAL FRAMING CONNECTION
SCALE: NONE

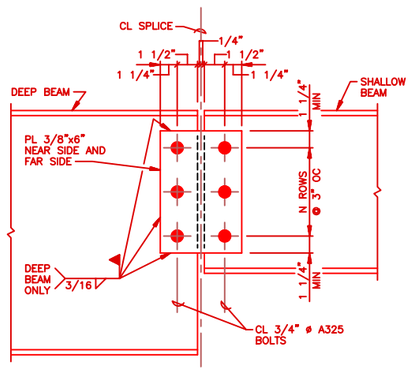

N=3 FOR W12 AND W14 SHALLOW BEAMS
N=4 FOR W16 AND W18 SHALLOW BEAMS
N=5 FOR W21 SHALLOW BEAMS
N=6 FOR W24 SHALLOW BEAMS

TYPICAL BEAM SPLICE
SCALE: NONE

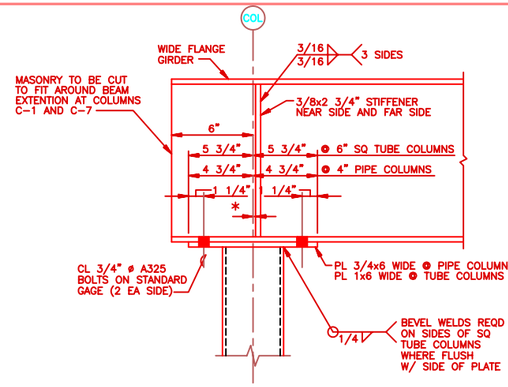

* CENTER THE STIFFENERS ON THE COLUMN UNLESS A BEAM IS FRAMING INTO THE GIRDER AT THE COLUMN. IF A BEAM IS FRAMING INTO THE GIRDER, OFFSET THE STIFFENER 1/2 THE BEAM WEB THICKNESS AND BOLT THE BEAM TO THE STIFFENER.

TYPICAL COLUMN CONNECTION
SCALE: NONE

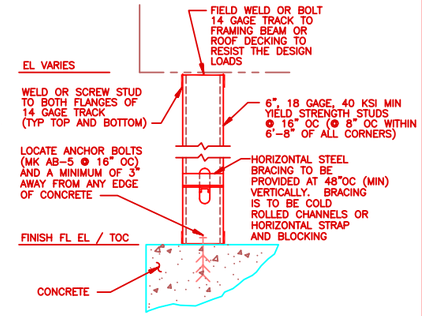

TYPICAL EXTERIOR METAL STUD WALL ANCHORAGE
SCALE: NONE

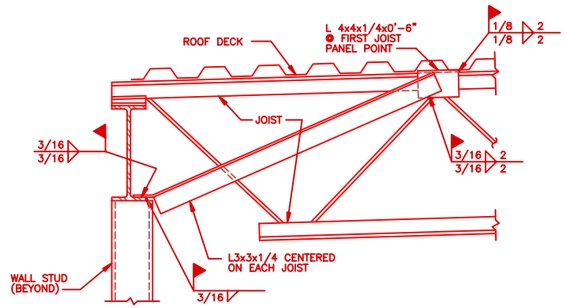

TYPICAL SIDEWALL BEAM FLANGE BRACE DETAIL
SCALE: NONE

NOTE: TYPICAL @ ALL PERIMETER SIDEWALL BEAMS IN WHICH WALL STUDS ARE ATTACHED.

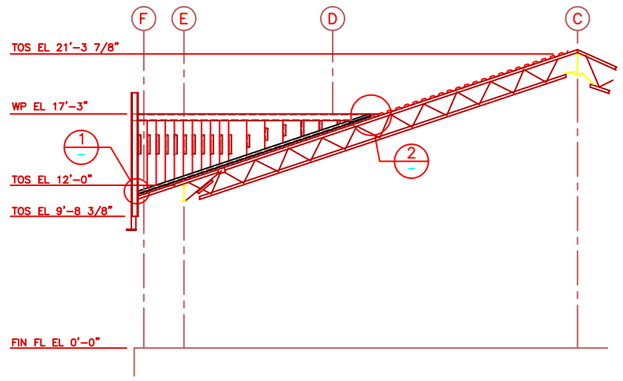

ELEVATION @ RIDGE LINE OF DORMER
SCALE: 1/4"=1'-0"

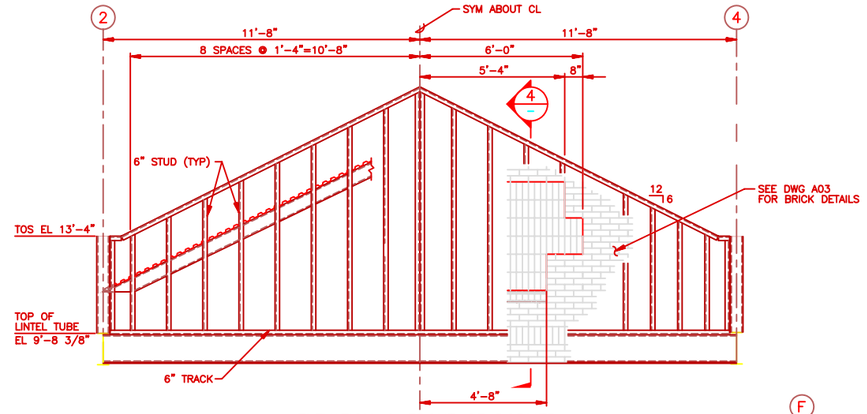

ELEVATION @ FRONT OF DORMER
SCALE: 1/2"=1'-0"

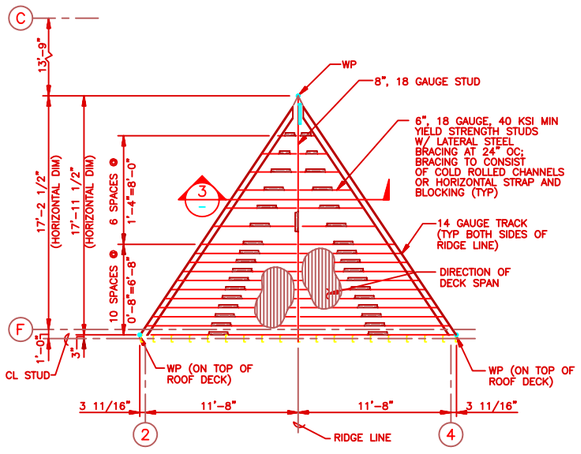

DORMER FRAMING PLAN
SCALE: 1/4"=1'-0"

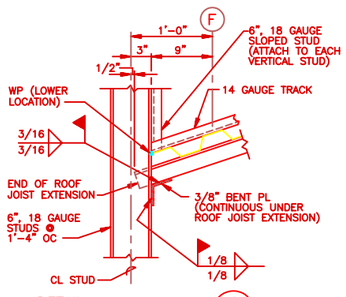

DETAIL 1
SCALE: NONE

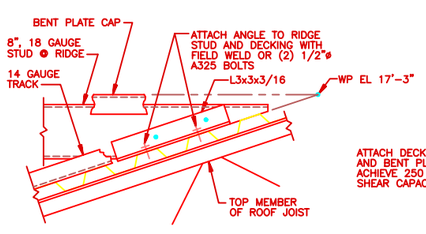

DETAIL 2
SCALE: NONE

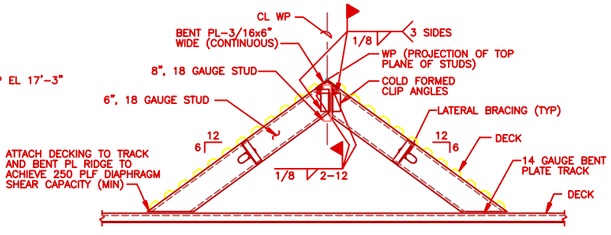

SECTION 3
SCALE: NONE

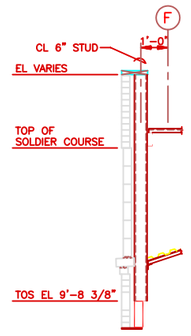

SECTION 4
SCALE: NONE

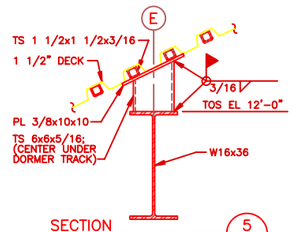

SECTION 5
SCALE: NONE
S02

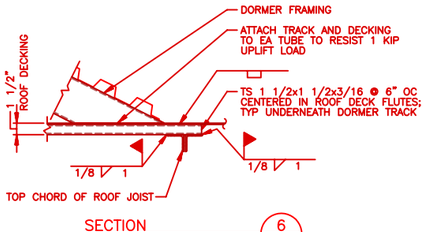

SECTION 6
SCALE: NONE
S02

0 1' 2' 4' 6'
SCALE: 1/2"=1'-0"

0 2' 4' 8' 12'
SCALE: 1/4"=1'-0"

NO.	DATE	PREPARED BY	CHECKED BY	QA APPROVED	DESCRIPTION OF REVISION
1	5/12/95	CCT	JRF/DGL	BLR/TLS	REVISED PER AS-BUILT CONDITIONS

WFO / NEXRAD PROGRAM
PROJECT NO. GH01

PROGRAM MANAGEMENT SERVICES CONTRACTOR
FLUOR DANIEL
GOULD EVANS ARCHITECTS, P.A.
KANSAS CITY, MO.
U.S.A.

DRAWN: FUEHNHAUSEN
CHECKED: J.R. FEAKER
SUPV. ENGR.: D. LOHE
ENGR/PROJ. MGR.: BLR/TLS
ACCEPTED/DATE: FOR/JTS

SPECIAL ENGINEERING PROGRAM OFFICE (SEPO)

WEATHER FORECAST OFFICE
MOBILE, ALABAMA

FRAMING SECTIONS AND DETAILS SHT 3 OF 3

044131-	SIZE 5	DWG. NO. S10	CURR. GH	REV. 1

FDSP0004 05/09/95 11:18 CCT 3/2=1' KGDMS101

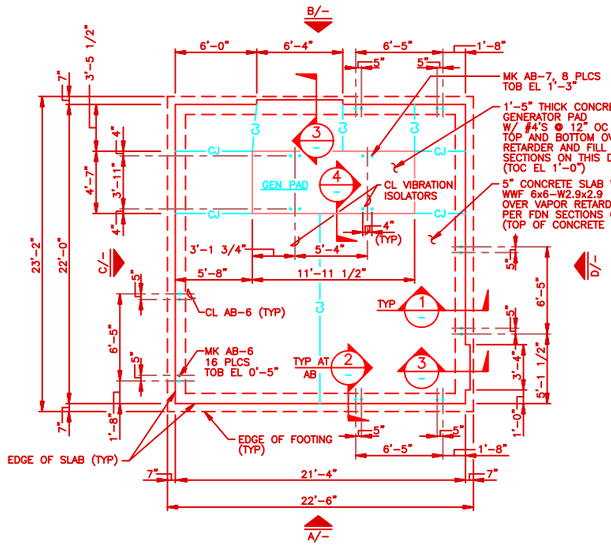

FOUNDATION PLAN
SCALE: 1/4"=1'–0"

NOTE: SEE DWG C04 FOR LOCATION, ORIENTATION, AND ACTUAL FIN FL EL

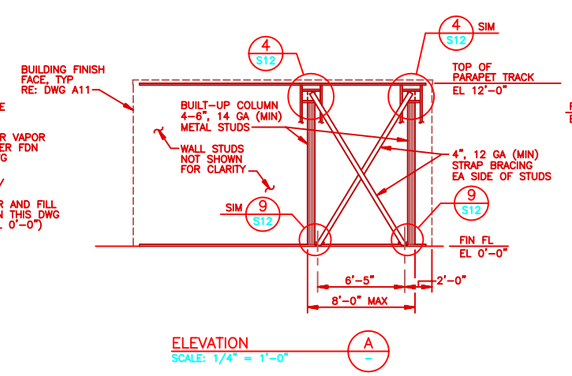

ELEVATION A
SCALE: 1/4" = 1'–0"

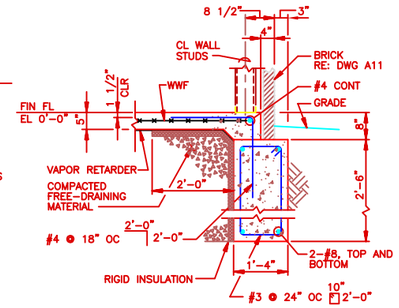

SECTION 1
SCALE: NONE

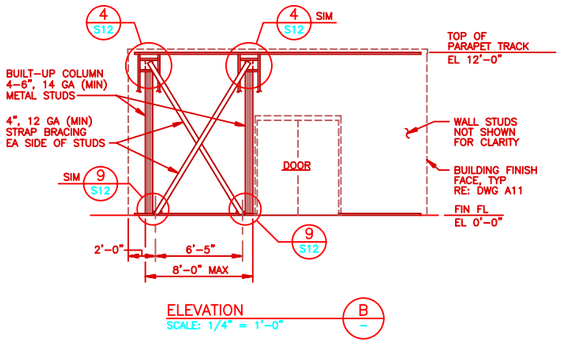

ELEVATION B
SCALE: 1/4" = 1'–0"

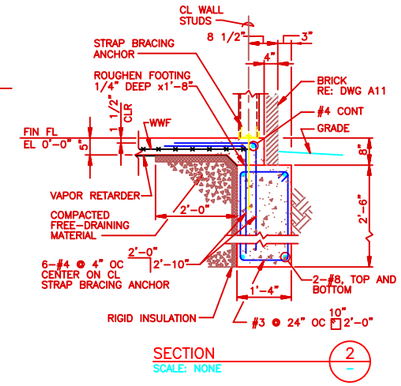

SECTION 2
SCALE: NONE

ROOF JOIST LOADING DIAGRAM		
DEAD + LIVE LOAD	LIVE LOAD	DEAD + WIND LOAD
95 PLF	76 PLF	–89 PLF

NOTES

1. FOR DESIGN LOADS SEE NOTE 1 ON DRAWING S02.
2. FOR "CONCRETE NOTES" SEE DWG S01.
3. METAL JOISTS (COLD–FORMED) AND BRIDGING ON THIS SHEET SHALL BE DESIGNED FOR THE LOADS IN THE "ROOF JOIST LOADING DIAGRAM". JOIST DEFLECTION SHALL NOT EXCEED SPAN/240 FOR THE LIVE LOAD NOR DEAD + WIND LOAD. JOISTS SHALL BEAR ON WALL STUD. RE: DETAIL 8 ON DRAWING S12.
4. WALL AND PARAPET STUDS SHALL BE DESIGNED FOR THE INDICATED DESIGN LOADS. DEFLECTION SHALL NOT EXCEED SPAN/600 FOR THE WIND LOAD. MINIMUM WEAK AXIS MOMENT OF INERTIA = 6.060 IN^4 FOR BUILT–UP COLUMNS.
5. STEEL ELEVATIONS REFERENCED ON THIS DRAWING ARE THE DISTANCE ABOVE DDG/STORAGE SHELTER FINISH FLOOR ELEVATION 0'–0". FOR THE ACTUAL FINISH FLOOR ELEVATION SEE DWG C04.
6. ROOF DECKING SHALL BE 1 1/2" DEEP WITH WIDE RIB CONFIGURATION AND SIZED FOR THE FOLLOWING:

   DEAD + LIVE LOAD = 64 PSF
   DEAD + WIND LOAD = –72 PSF
   LIVE LOAD = 57 PSF
   MAX LIVE LOAD DEFLECTION = SPAN/240
   DIAPHRAM SHEAR CAPACITY (MIN) = 558 PLF
7. ROOF DECK FASTENING SHALL BE IN ACCORDANCE WITH THE MANUFACTURER'S SPECIFICATIONS TO ACHIEVE THE VERTICAL AND HORIZONTAL DESIGN LOAD REQUIREMENTS. ALL WELDS SHOULD BE MADE BY QUALIFIED WELDERS FOLLOWING AWS D1.3 SPECIFICATIONS.
8. FOR ANCHOR BOLT INFORMATION, SEE DRAWING S06.
9. PROVIDE L 3x2 1/2x3/16 (LLH) LOOSE LINTEL AT SCUPPER OPENING THROUGH BRICK. SEE DRAWING A11 AND NOTE 11 ON DRAWING S02 FOR OTHER LINTEL REQUIREMENTS.

LEGEND

INDICATES DIRECTION OF SPAN FOR METAL DECKING.

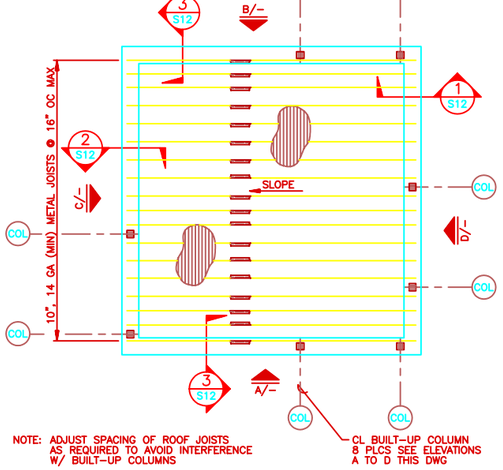

ROOF FRAMING PLAN
SCALE: 1/4"=1'–0"

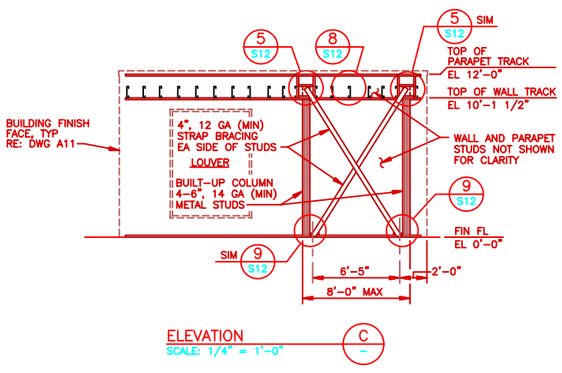

ELEVATION C
SCALE: 1/4" = 1'–0"

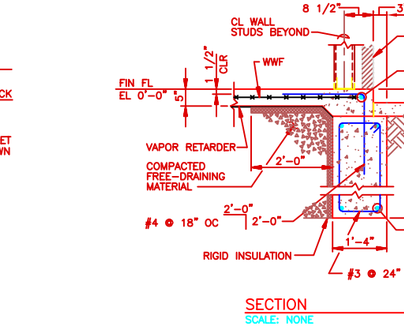

SECTION 3
SCALE: NONE

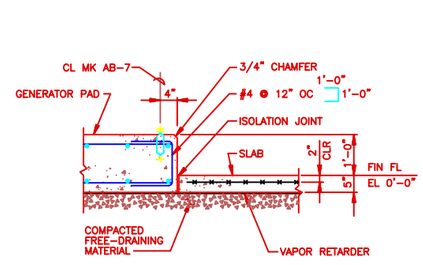

SECTION 4
SCALE: NONE

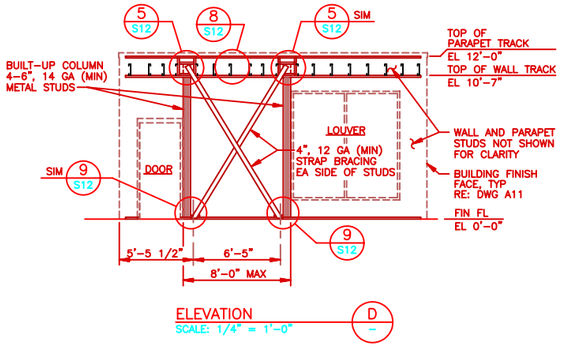

ELEVATION D
SCALE: 1/4" = 1'–0"

0 2' 4' 8' 12'
SCALE: 1/4"=1'–0"

NO.	DATE	PREPARED BY	CHECKED BY	FDC APPROVED	ACTR/COTR APPROVED	DESCRIPTION OF REVISION
1	5/12/95	CCT	JRF/DGL	BLR/TLS	FGR/JTS	REVISED PER AS–BUILT CONDITIONS

WFO / NEXRAD PROGRAM
PROJECT NO. GH01

PROGRAM MANAGEMENT SERVICES CONTRACTOR
FLUOR DANIEL GOULD EVANS ARCHITECTS, P.A.
KANSAS CITY, MO. U.S.A.

SEPO

DRAWN: FUEHRHAUSEN
CHECKED: J.R. FEAKER
SUPV. ENGR.: D. LOHE
ENVIR/TRIAL ENGR.: BLR/TLS
ACQTR./COTR.: FGR/JTS

SPECIAL ENGINEERING PROGRAM OFFICE (SEPO)
WEATHER FORECAST OFFICE
MOBILE, ALABAMA

DDG/STORAGE BUILDING PLANS, SECTIONS & DETAILS

044131–	SIZE 5	DWG. NO. S11	CLIN. GH	REV. 1

FDSP0004 05/09/95 11:19 CCT 3/4=1' KGR45111

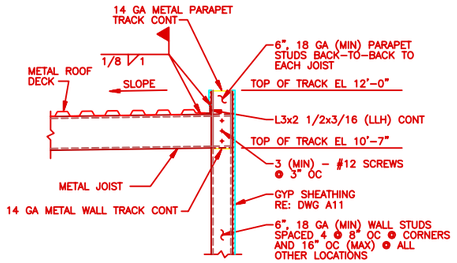

SECTION 1 S11
SCALE: NONE

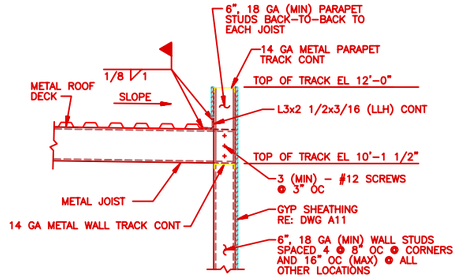

SECTION 2 S11
SCALE: NONE

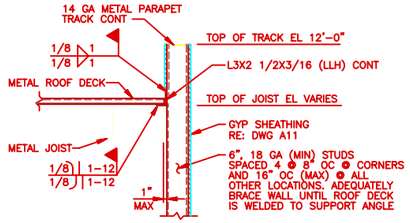

SECTION 3 S11
SCALE: NONE

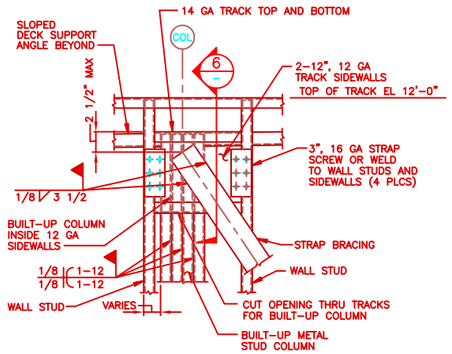

DETAIL 4 S11
SCALE: NONE

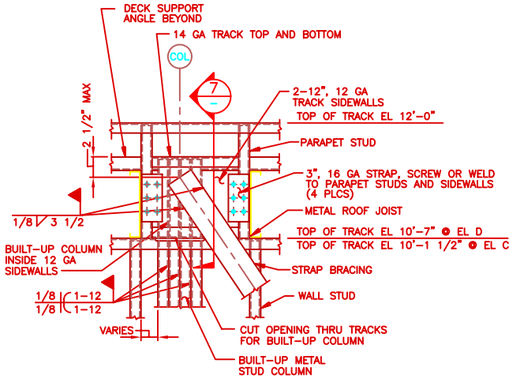

DETAIL 5 S11
SCALE: NONE

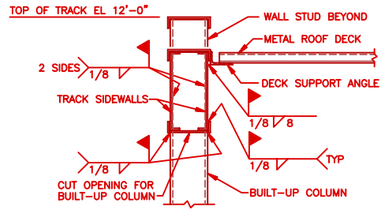

SECTION 6
SCALE: NONE

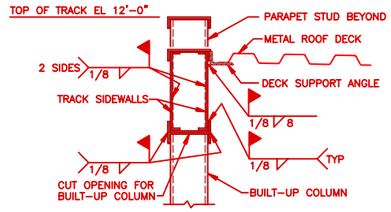

SECTION 7
SCALE: NONE

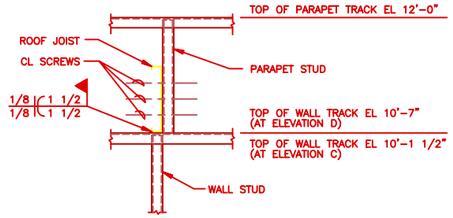

DETAIL 8 S11
SCALE: NONE

NOTE:
THIS CONDITION OCCURS AT EACH ROOF JOIST

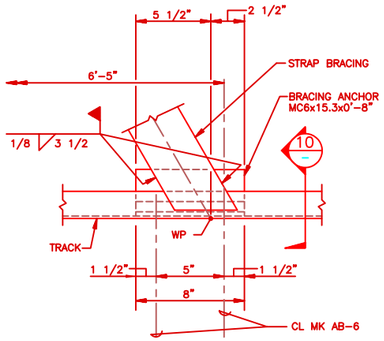

DETAIL 9 S11
SCALE: NONE

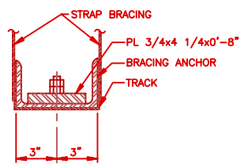

SECTION 10
SCALE: NONE

NO.	DATE	PREPARED BY	CHECKED BY	PD APPROVED	ACTR./CONTR. APPROVED	DESCRIPTION OF REVISION
1	5/12/95	CCT	JRF/DGL	BLR/TLS	FGR/JTS	REVISED PER AS-BUILT CONDITIONS

WFO / NEXRAD PROGRAM
PROJECT NO. GH01

DESIGN: FUEHNHAUSEN
CHECKED: J.R. FEAKER
SUPV. ENGR.: D. LOHE
ENGR/PROJ. MGR.: BLR/TLS
ACCTR./CONTR.: FGR/JTS

SPECIAL ENGINEERING PROGRAM OFFICE (SEPO)

WEATHER FORECAST OFFICE
MOBILE, ALABAMA

DDG/STORAGE BUILDING
SECTIONS AND DETAILS

PROGRAM MANAGEMENT SERVICES CONTRACTOR
FLUOR DANIEL
GOULD EVANS ARCHITECTS, P.A.
KANSAS CITY, MO. U.S.A.

SEPO

SIZE	DWG. NO.	CLSN.	REV.
044131- 5	S12	GH	1

FDSP0004 05/09/95 11:19 CCT 3/4=1' KOHS121

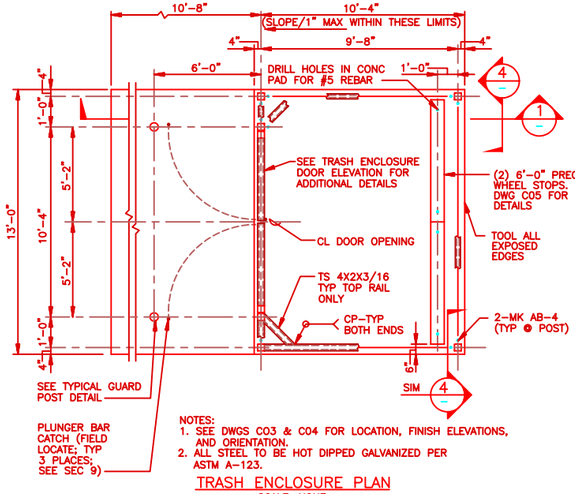

NOTES:
1. SEE DWGS C03 & C04 FOR LOCATION, FINISH ELEVATIONS, AND ORIENTATION.
2. ALL STEEL TO BE HOT DIPPED GALVANIZED PER ASTM A-123.

TRASH ENCLOSURE PLAN
SCALE: NONE

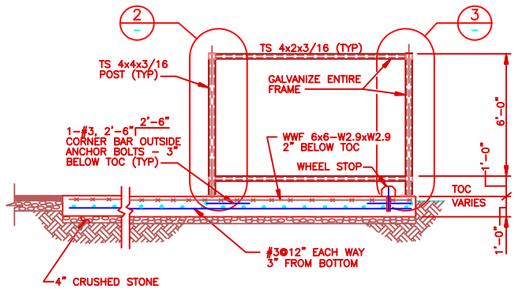

NOTE: ERECT FRAME LEVEL AND PLUMB

SECTION 1
SCALE: NONE

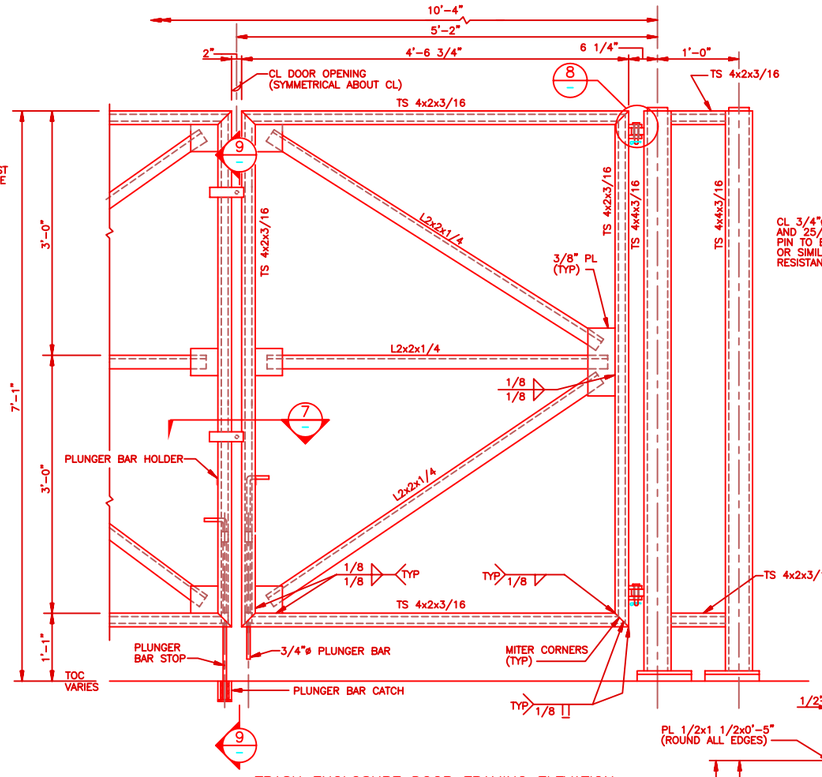

TRASH ENCLOSURE DOOR FRAMING ELEVATION
SCALE: NONE

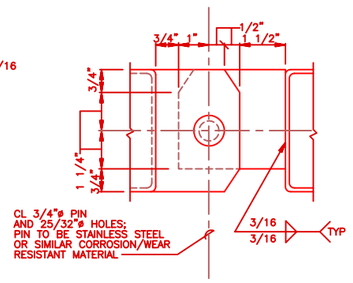

TOP VIEW

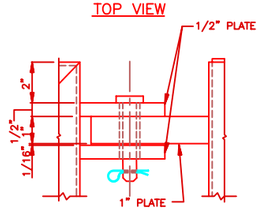

ELEVATION

DETAIL 8
SCALE: NONE

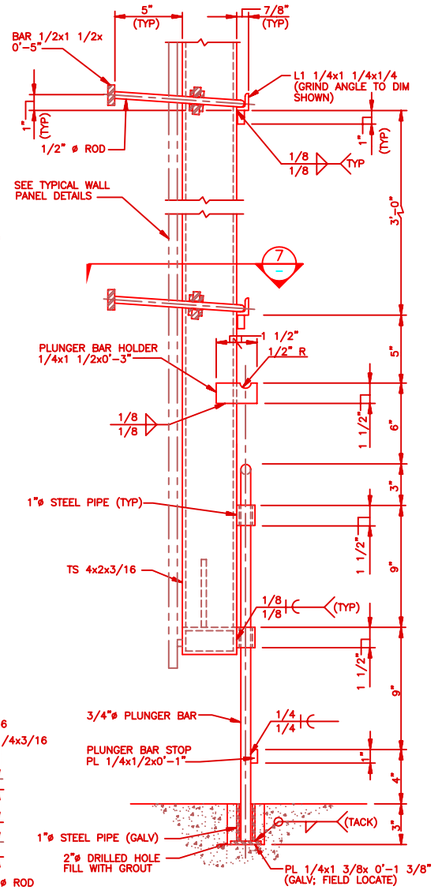

SECTION 9
SCALE: NONE

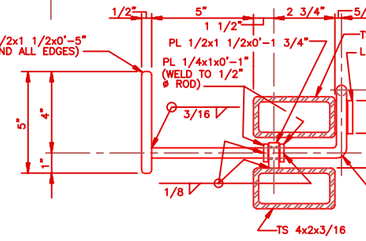

SECTION 7
SCALE: NONE

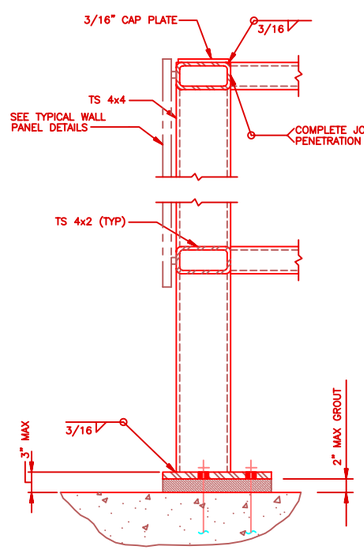

DETAIL 2
SCALE: NONE

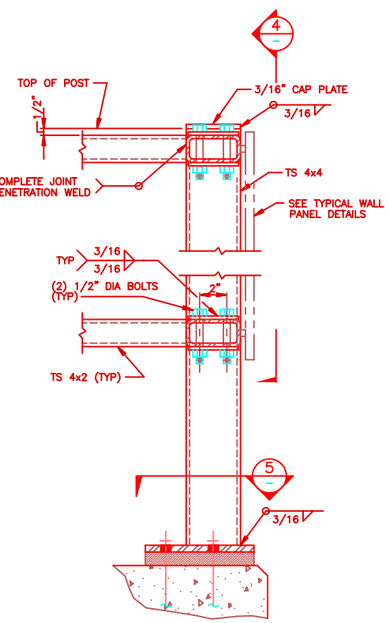

DETAIL 3
SCALE: NONE

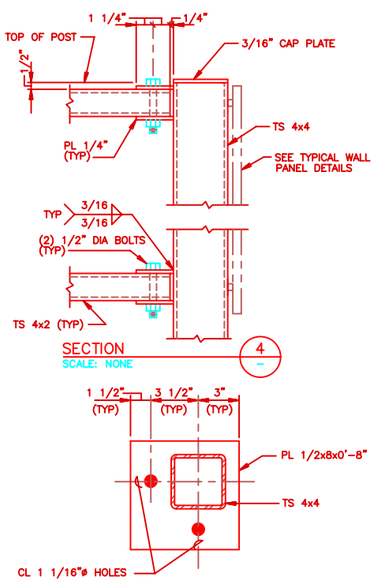

SECTION 4
SCALE: NONE

SECTION 5
SCALE: NONE

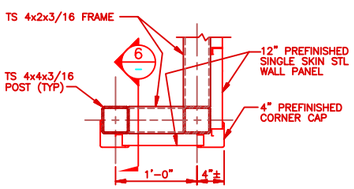

CORNER DETAIL
SCALE: 1 1/2"=1'-0"

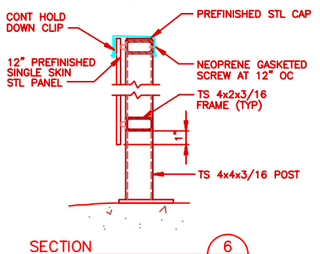

SECTION 6
SCALE: NONE

TYPICAL WALL PANEL DETAILS

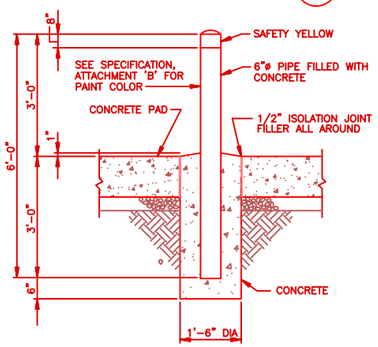

NOTE:
GUARD POSTS SHALL BE FABRICATED FROM SCHEDULE 40 STEEL PIPE CONFORMING TO ASTM A53, GRADE B, TYPE E OR S.

TYPICAL GUARD POST DETAIL
SCALE: NONE

NO.	DATE	PREPARED BY	CHECKED BY	PD APPROVED	ACPE/CCER APPROVED	DESCRIPTION OF REVISION
1	5/12/95	CCT	JRF/DGL	BLR/TLS	FGR/JTS	REVISED PER AS-BUILT CONDITIONS

WFO / NEXRAD PROGRAM
PROJECT NO. GH01

DESIGN: FUENFHAUSEN
CHECKED: J.R. FEAKER
SUPV. ENGR.: D. LOHE
ENGR/PROJ. MGR.: BLR/TLS
ACCPTR./CCER.: FGR/JTS

SPECIAL ENGINEERING PROGRAM OFFICE (SEPO)
WEATHER FORECAST OFFICE
MOBILE, ALABAMA

TRASH ENCLOSURE
PLANS, SECTIONS & DETAILS

PROGRAM MANAGEMENT SERVICES CONTRACTOR
FLUOR DANIEL
GOULD EVANS ARCHITECTS, P.A.
KANSAS CITY, MO. U.S.A.

SIZE	DWG. NO.	CLIN.	REV.
044131-	5 S13	GH	1

FDSP0004 05/09/95 11:20 CCT 3/2=1" KOHS131

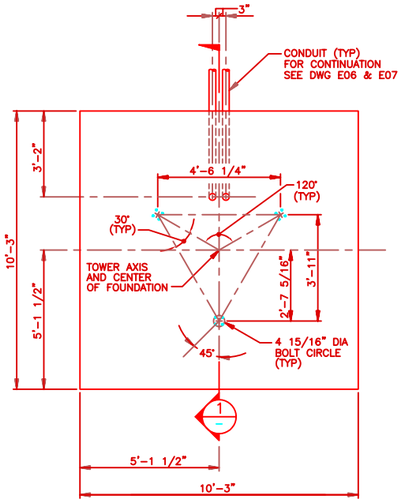

PLAN
ROHN TOWER FOUNDATION
SCALE: 1/2"=1'-0"
(SEE DWG C02 FOR LOCATION)

GRID NORTH

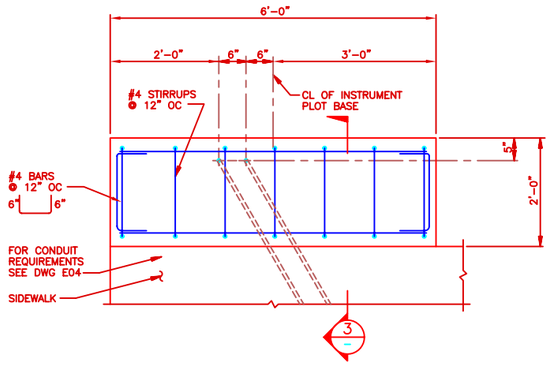

PLAN
INSTRUMENT PLOT BASE
SCALE: 1"=1'-0"
(SEE DWG C02 FOR LOCATION)

GRID NORTH

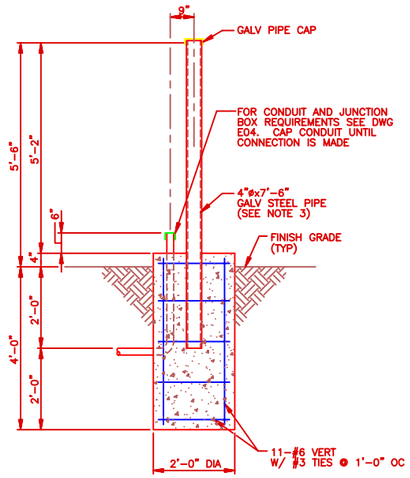

DISH ANTENNA BASE
SCALE: 3/4"=1'-0"
(SEE DWG C02 FOR LOCATION)

NOTES

1. FOR DRAWING INDEX AND ABBREVIATIONS SEE DWG I01.
2. THE CONTRACTOR SHALL INSTALL (1) 20' 6N TOWER SECTION, (1) 20' 5N SECTION, AND (1) 10' 4NB TOP SECTION IN ACCORDANCE WITH MANUFACTURER'S RECOMMENDATIONS. ALL TOWER SECTIONS SHALL BE GOVERNMENT FURNISHED MATERIAL.
3. DISH ANTENNA POSTS SHALL BE FABRICATED FROM SCHEDULE 40 STEEL PIPE CONFORMING TO ASTM A53, GRADE B, TYPE E OR S.

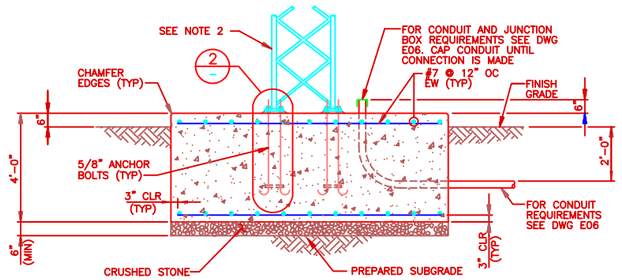

SECTION
SCALE: NONE
1

SECTION
SCALE: NONE
3

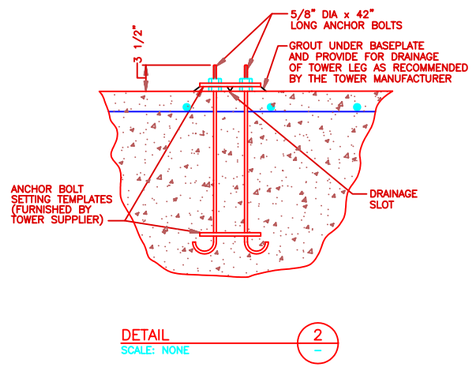

DETAIL
SCALE: NONE
2

NOTE: THE UPPER ANCHOR BOLT SETTING TEMPLATE SHALL BE REMOVED PRIOR TO THE TOWER INSTALLATION.

0 6" 1' 2' 3'
SCALE: 1"=1'-0"

0 1' 2' 3' 4'
SCALE: 3/4"=1'-0"

0 1' 2' 4' 6'
SCALE: 1/2"=1'-0"

NO.	DATE	PREPARED BY	CHECKED BY	PIC APPROVED	ACOE/CCEE APPROVED	DESCRIPTION OF REVISION
1	5/12/95	CCT	JRF/DGL	BLR/TLS	FGR/JTS	REVISED PER AS-BUILT CONDITIONS

WFO / NEXRAD PROGRAM
PROJECT NO. GH01

DESIGN: FUENFHAUSEN
CHECKED: J.R. FEAKER
SUPV. ENGR: D. LOHE
ENGR/PROJ. MGR.: BLR/TLS
ACOE/CCEE: FGR/JTS

SPECIAL ENGINEERING PROGRAM OFFICE (SEPO)

WEATHER FORECAST OFFICE
MOBILE, ALABAMA

MISCELLANEOUS
YARD STRUCTURES

PROGRAM MANAGEMENT SERVICES CONTRACTOR
FLUOR DANIEL
GOULD EVANS ARCHITECTS, P.A.
KANSAS CITY, MO.
U.S.A.

SEPO

SIZE	DWG. NO.	CLIN	REV.
044131-	5	S14	GH	1

FDSP0004 05/09/95 11:20 OCT 12/1=1" KGH6141