# U.S. DEPARTMENT OF TRANSPORTATION
# FEDERAL AVIATION ADMINISTRATION
## ATO – TECHNICAL OPERATIONS WESTERN SERVICE AREA

# REPLACE GUARDRAILS ALONG QMI ARSR ACCESS ROAD
# MICA PEAK, WASHINGTON

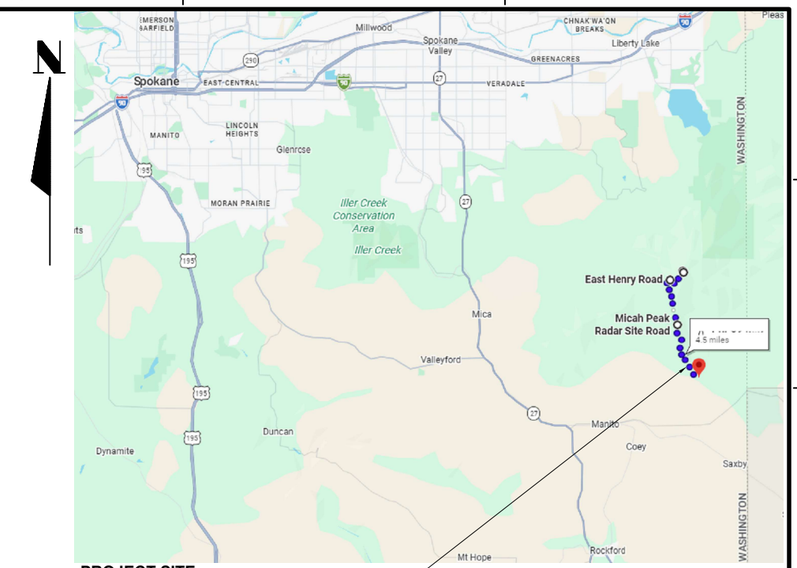


**VICINITY MAP**

**PROJECT SITE**
START POINT:
47°34'27.7"N 117°04'51.4"W
END POINT:
47°31'34.4"N 117°04'11.3"W

**SITE DATA**

OWNER: FEDERAL AVIATION ADMINISTRATION

MICA PEAK (QMI) ARSR FACILITY:(PROJECT START POINT AT TOP)

LOCATION: T. 24 N., R. 45 E., W.M., SEC. 14 STAT OF WASHINGTON PLANE COORDINATE SYSTEM USC AND GS 1933 MARKER AT 231789.250 & 2925962.44

LATITUDE/ LONGITUDE: 47°34'27.7"N / 117°04'51.4"W

ELEVATION: 5178FT MSL AT FACILITY

FMP STATION AT DOWNHILL: (PROJECT END POINT)

LATITUDE/ LONGITUDE: 47°31'34.4"N / 117°04'11.3"W

ELEVATION: 2875FT MSL

POWER: WASHINGTON WATER & POWER CO.

TELEPHONE: TELEPHONE UTILITIES OF MOSES LAKE
U.S. WEST COMMUNICATIONS INC.

FOR OFFICIAL USE ONLY
PUBLIC AVAILABILITY TO BE DETERMINED UNDER 5 USC 552

## SITE DRAWINGS INDEX:

DRAWING NUMBER TITLE

### GENERAL

QMI–1603949–G001 COVER SHEET, DRAWING INDEX & VICINITY MAP

### CIVIL

QMI–1603949–C001 GENERAL NOTES AND ABBREVIATIONS
QMI–1603949–C002 QMI ACCESS ROAD– EXISTING ROAD MAP
QMI–1603949–C003 QMI ACCESS ROAD– STATION: 0.00 TO 1.05 MILE
QMI–1603949–C004 QMI ACCESS ROAD– STATION: 1.05MILE TO 2.25MILE
QMI–1603949–C005 QMI ACCESS ROAD– STATION: 2.25MILE TO 3.25MILE
QMI–1603949–C006 QMI ACCESS ROAD– STATION: 3.25MILE TO 3.90MILE
QMI–1603949–C007 QMI ACCESS ROAD– STATION: 3.90MILE TO 4.60MILE

### STRUCTURAL REFERNCES

FLH STANDARD 617–13: MGS & G4 W BEAM GUARDRAIL INSTALLATION IN ROCK
FLH STANDARD 617–18: MGS W–BEAM GUARDRAIL BACK SLOPE ANCHOR TERMINAL MGS–BAT TYPE
FLH STANDARD 617–19: MGS & G4 W BEAM GUARDRAIL TYPE FLARED TERMINAL AND GRADING
FLH STANDARD 617–20: MGS & G4 W BEAM GUARDRAIL TYPE TANJENT TERMINAL AND GRADING
FLH STANDARD 617–32: MGS W BEAM GUARDRAIL STEEL POSTS
FLH STANDARD 617–37: MGS W–BEAM GUARDRAIL LONG–SPAN SYSTEM
FLH STANDARD 617–38: MGS W–BEAM GUARDRAIL STEEL POSTS ATTACHED TO BOX CULVERT

| REV | APPROVED DATE | DESCRIPTION | JCN | REDLINE DATE | APVD |
|---|---|---|---|---|---|

DEPARTMENT OF TRANSPORTATION
FEDERAL AVIATION ADMINISTRATION
ATO - TECHNICAL OPERATIONS WESTERN SERVICE AREA

ARSR
REPLACE GUARDRAILS ALONG QMI ARSR ACCESS ROAD
COVER SHEET & VICINITY MAP

MICA PEAK WA

| REVIEWED BY | SUBMITTED BY | APPROVED BY |
|---|---|---|
| | PROJECT ENGINEER | MGR: ENGINEERING - SEATTLE |
| | DESIGNED / ISSUED BY | DATE / JCN 1603949 |
| | DRAWN / ENGINEERING SERVICES INFRASTRUCTURE | DRAWING NO QMI-1603949-G001 / REV |
| | CHECKED | |

CONSTRUCTION
ISSUED FOR:

$FILESS $DATES $TIMES $NAMES

EDM: QMI-1603949-G001.dwg

DRAWING PRODUCED ON WSA MICROSTATION SYSTEM

## GENERAL NOTES

1. THE CONTRACTOR CONSTRUCTION SAFETY MANUAL SHALL COMPLY WITH OSHA 29 CFR 1910 AND 29 CFR 1926.

2. LOCATIONS AND ELEVATIONS OF EXISTING FEATURES TO BE VERIFIED BY FIELD MEASUREMENTS PRIOR TO CONSTRUCTION OF NEW WORK.

3. ALL DIMENSIONS ARE TO BE VERIFIED IN THE FIELD. ANY DISCREPANCIES FOUND BETWEEN THE DRAWINGS AND SPECIFICATIONS AND SITE CONDITION OR ANY INCONSISTENCIES OR AMBIGUITIES IN THE DRAWINGS OR SPECIFICATIONS SHALL BE IMMEDIATELY REPORTED TO THE RESIDENT ENGINEER (RE) IN WRITING, WHO SHALL CORRECT SUCH INCONSISTENCIES OR AMBIGUITIES IN WRITING. THE CONTRACTOR SHALL NOT PERFORM ANY WORK BEFORE VERIFICATION AND AFTER DISCOVERY OF SUCH DISCREPANCIES, INCONSISTENCIES, OR AMBIGUITIES WITHOUT WRITTEN RE AUTHORIZATION. ANY WORK PERFORMED BY THE CONTRACTOR AFTER DISCOVERY OF SUCH DISCREPANCIES WITHOUT PRIOR WRITTEN AUTHORIZATION BY RE WILL BE CONSIDERED TO BE DONE AT THE CONTRACTOR'S RISK.

4. FINISHED GRADE SHALL BE SLOPED AT A UNIFORM SLOPE BETWEEN SPOT ELEVATIONS.

5. ALL FILL MATERIAL SHALL MEET REQUIREMENTS AS OUTLINED IN THE PROJECT SPECIFICATIONS.

6. THE CONTRACTOR SHALL BE RESPONSIBLE FOR ENSURING THAT ALL SLOPES ARE BUILT IN ACCORDANCE WITH THESE PLANS. IF THERE IS ANY QUESTION REGARDING THESE PLANS, THE CONTRACTOR SHALL REQUEST AN INTERPRETATION BEFORE DOING ANY WORK. THE CONTRACTOR SHALL ALSO TAKE NECESSARY STEPS TO PROTECT THE PROJECT AND ADJACENT PROPERTY FROM ANY EROSION AND SILTATION THAT RESULT FROM THEIR OPERATIONS BY APPROPRIATE MEANS, (SAND BAGS, TEMPORARY DESILTING BASINS, DIKES, ETC.) UNTIL SUCH TIME THAT THE PROJECT IS COMPLETED AND ACCEPTED BY FAA.

7. PRIOR TO ANY EXCAVATIONS UNDER THIS CONTRACT, THE CONTRACTOR SHALL PERFORM GPRS UTILITY LOCATE TO IDENTIFY ALL UTILITIES AT THE SITE. CONTRACTOR SHALL POTHOLE AND HAND EXCAVATE NEAR KNOWN UTILITY LINES TO PREVENT EXCAVATION DAMAGE TO UNDERGROUND UTILITIES.

8. THE CONTRACTOR SHALL TAKE PRECAUTIONARY MEASURES TO PROTECT WITHIN THE SITE, ALL UTILITY LINES, EXISTING PERMANENT STRUCTURES AND ANY OTHER EXISTING LINES THAT ARE NOT OF RECORD OR SHOWN ON PLANS. ANY UTILITIES OR STRUCTURES DAMAGED DURING THE COURSE OF CONSTRUCTION SHALL BE IMMEDIATELY REPAIRED AND/OR REPLACED BY THE CONTRACTOR, UNLESS APPROVED OTHERWISE BY THE RE, TO A CONDITION EQUAL TO OR BETTER THAN THE EXISTING AND AS APPROVED BY THE RE.

9. THE CONTRACTOR SHALL BE RESPONSIBLE FOR RESTORING ANY MONUMENTATION AND/OR BENCHMARKS THAT ARE DISTURBED OR DESTROYED BY CONSTRUCTION. SUCH POINTS SHALL BE REFERENCED AND REPLACED WITH APPROPRIATE MONUMENTATION BY A LICENSED SURVEYOR AT THE CONTRACTOR'S SOLE EXPENSE.

10. THE CONTRACTOR SHALL SECURE ANY REQUIRED PERMITS FOR CONSTRUCTION PRIOR TO THE START OF CONSTRUCTION.

11. THE CONTRACTOR IS HEREBY NOTIFIED THAT ESSENTIAL AND PERTINENT INFORMATION REGARDING THE CONSTRUCTION AND COMPLETION OF WORK FOR THIS PROJECT IS CONTAINED IN THE CONTRACT DOCUMENTS AND SPECIFICATIONS. IT IS THE CONTRACTOR'S RESPONSIBILITY TO READ AND REVIEW THIS INFORMATION TO THEIR OWN SATISFACTION PRIOR TO PERFORMING ANY WORK. ANY DEFICIENT, INCOMPLETE OR INCORRECT WORK SHALL BE REDONE TO MEET REQUIREMENTS AT THE CONTRACTOR'S SOLE EXPENSE.

12. THE CONTRACTOR SHALL DESIGN, CONSTRUCT, AND MAINTAIN ALL SAFETY DEVICES, AND SHALL BE SOLELY RESPONSIBLE FOR CONFORMING TO ALL LOCAL, STATE, AND FEDERAL SAFETY AND HEALTH STANDARDS, LAWS AND REGULATIONS.

13. THE CONTRACTOR AGREES TO ASSUME SOLE AND COMPLETE RESPONSIBILITY FOR JOB SITE CONDITIONS DURING THE COURSE OF CONSTRUCTION OF THIS PROJECT, INCLUDING SAFETY OF ALL PERSONS AND PROPERTY. CONTRACTOR FURTHER AGREES THAT THIS REQUIREMENT SHALL APPLY CONTINUOUSLY AND NOT BE LIMITED TO NORMAL WORKING HOURS AND THAT THE CONTRACTOR SHALL DEFEND; INDEMNIFY AND HOLD THE FAA HARMLESS FROM ANY AND ALL LIABILITY, REAL OR ALLEGED IN CONNECTION WITH THE PERFORMANCE OF WORK ON THIS PROJECT.

14. EXISTING VEHICULAR ACCESS TO SITE SHALL BE KEPT IN SERVICE DURING THE COURSE OF CONSTRUCTION. THE CONTRACTOR SHALL PREPARE A PLAN SHOWING PROPOSED LOCATIONS OF STAGING, STORAGE OF MATERIALS, AND VEHICLES ON SITE TO BE SUBMITTED TO THE RESIDENT ENGINEER FOR REVIEW, COMMENT AND/OR APPROVAL PRIOR TO START OF CONSTRUCTION. DUE TO LIMITED SPACE ON SITE, CONTRACTOR SHALL COORDINATE WITH RE FOR ADDITIONAL AREAS REQUIRED FOR MATERIAL AND EQUIPMENT STORAGE.

15. THE NORMAL ACTIVITIES WITHIN THE FACILITY WILL CONTINUE DURING CONSTRUCTION. CONTRACTOR SHALL DEVISE A DETAILED WORK SCHEDULE AND CLOSELY COORDINATE WITH THE RE FOR ALL ACTIVITIES. THE CONTRACTOR SHALL USE GREAT CARE AND CAUTION WHILE WORKING WITHIN THE EXISTING FACILITY (SITE AND BUILDINGS) AS NOT TO DISRUPT THE FUNCTIONS OF THIS FAA FACILITY.

16. IT IS ABSOLUTELY MANDATORY THAT THE CONTRACTOR PROTECT ALL NEW AND EXISTING COMMUNICATION EQUIPMENT, ELECTRICAL AND MECHANICAL EQUIPMENT, BOTH INSIDE AND OUTSIDE THE BUILDING FROM DAMAGE.

17. STAGING AND STORAGE OF CONSTRUCTION MATERIAL AND EQUIPMENT SHALL BE LIMITED TO THE CONSTRUCTION STAGING AREA. CONTRACTOR'S PARKING AREA SHALL BE DETERMINED AT THE PRE-CONSTRUCTION CONFERENCE. MATERIALS SHALL BE NEATLY STORED AND PROTECTED AT ALL TIMES. UPON COMPLETION OF WORK THE CONTRACTOR SHALL RESTORE THIS AREA BACK TO ITS ORIGINAL PRE-CONSTRUCTION CONDITION.

18. ALL CONSTRUCTION MATERIAL SHALL BE REASSEMBLED TO AN OPTIMUM SIZE AND WEIGHT TO MINIMIZE ACTIVITIES WITHIN THE FACILITY. CONTRACTOR SHALL VERIFY ACCESS PATHWAYS WITH RE BEFORE START OF CONSTRUCTION.

19. WELDING & CADWELDING REQUIRES A HOT WORK PERMIT. WELDING AND HEAVY CONSTRUCTION SHALL BE DONE OUTSIDE IN TEMPORARY CONSTRUCTION AREAS AS DETERMINED BY THE RE AND TO BE CLEANED UP AT THE END OF THE DAY. CONTRACTOR SHALL PROVIDE THEIR OWN POWER FOR THESE OPERATIONS. NO WELDING OR HEAVY CONSTRUCTION IS PERMITTED INSIDE THE BUILDING AS IT MAY DAMAGE OR INTERFERE WITH ELECTRONICS EQUIPMENT.

20. ENCLOSED DUMPSTERS FOR DISPOSAL OF CONSTRUCTION DEBRIS SHALL BE PROVIDED BY THE CONTRACTOR WITHIN AREA DESIGNATED BY RE AT THE PRE-CONSTRUCTION MEETING. THE AREA AROUND THE DUMPSTERS SHALL BE KEPT CLEAN AND FREE OF EXCESS DEBRIS AND DUST DURING CONSTRUCTION. ALL DEBRIS SHALL BE REMOVED BY CONTRACTOR. ANY WASTE THAT CAN ATTRACT WILDLIFE SHALL BE REMOVED FROM THE SITE DAILY. FAA DUMPSTER SHALL NOT BE USED BY CONTRACTOR. CONSTRUCTION DEBRIS MUST BE REMOVED DAILY.

21. CONTRACTOR SHALL PROVIDE TEMPORARY UTILITIES DURING CONSTRUCTION. VERIFY TEMPORARY UTILITIES LOCATIONS AND USE AS PERMITTED BY RE.

22. THE CONTRACTOR SHALL PROVIDE SANITARY TOILET FACILITIES WITH WATER FOR THE WORKERS AND RE.

23. THE CONTRACTOR SHALL PROVIDE TEMPORARY POWER FOR ALL CONSTRUCTION ACTIVITIES. CONSTRUCTION TOOLS SHALL BE POWERED FROM THE TEMPORARY POWER SOURCE ONLY. ALL POWER TOOLS SHALL BE PRE-APPROVED BY THE RE.

24. SHUTDOWN AND CUTOVERS OF ENVIRONMENTAL AND ELECTRICAL SYSTEMS SHALL BE PERFORMED BY FAA PERSONNEL AND NOT BY CONTRACTOR. ALL PREPARATORY WORK FOR SHUTDOWN AND CUTOVER SHALL BE SCHEDULED AND COORDINATED WITH THE RE A MINIMUM OF 10 WORKING DAYS IN ADVANCE.

25. WHERE NEW WORK IS TO BE CONNECTED TO EXISTING WORK, EXERCISE CARE NOT TO DISTURB OR DAMAGE EXISTING WORK.

26. USE SACRIFICIAL LAYERS OF PROPER MATERIAL AT THE POINT OF CONNECTIONS BETWEEN DISSIMILAR METALS WHERE IT APPLIES.

27. CONTRACTOR TO PROPERLY DISPOSE/REMOVE HAZARDOUS MATERIALS IN ACCORDANCE WITH SPECIFICATION SECTION 02 82 00.

28. REPAIR DAMAGED GALVANIZATION PER SPECIFICATIONS SECTION 09 97 00, SPECIAL COATINGS.

29. ALL HOT-DIPPED GALVANIZED METALS SHALL BE PAINTED PER SPECIFICATIONS SECTION 09 97 00, SPECIAL COATINGS.

| REV | APPROVED DATE | DESCRIPTION | JCN | REDLINE DATE | APVD |
|---|---|---|---|---|---|

DEPARTMENT OF TRANSPORTATION
FEDERAL AVIATION ADMINISTRATION
ATO - TECHNICAL OPERATIONS — WESTERN SERVICE AREA

ARSR

REPLACE GUARDRAILS ALONG QMI ARSR ACCESS ROAD
GENERAL CONSTRUCTION NOTE

MICA PEAK — WA

| REVIEWED BY | SUBMITTED BY | APPROVED BY |
|---|---|---|
| | PROJECT ENGINEER | MGR: ENGINEERING - SEATTLE |

| DESIGNED | ISSUED BY | DATE | JCN |
|---|---|---|---|
| DRAWN | ENGINEERING SERVICES INFRASTRUCTURE | DRAWING NO | REV |
| CHECKED | | QMI-1603949-C001 | |

1603949

ISSUED FOR: CONSTRUCTION

$FILESS $DATES $TIMES $NAMES

EDM: QMI-1603949-C001.dwg

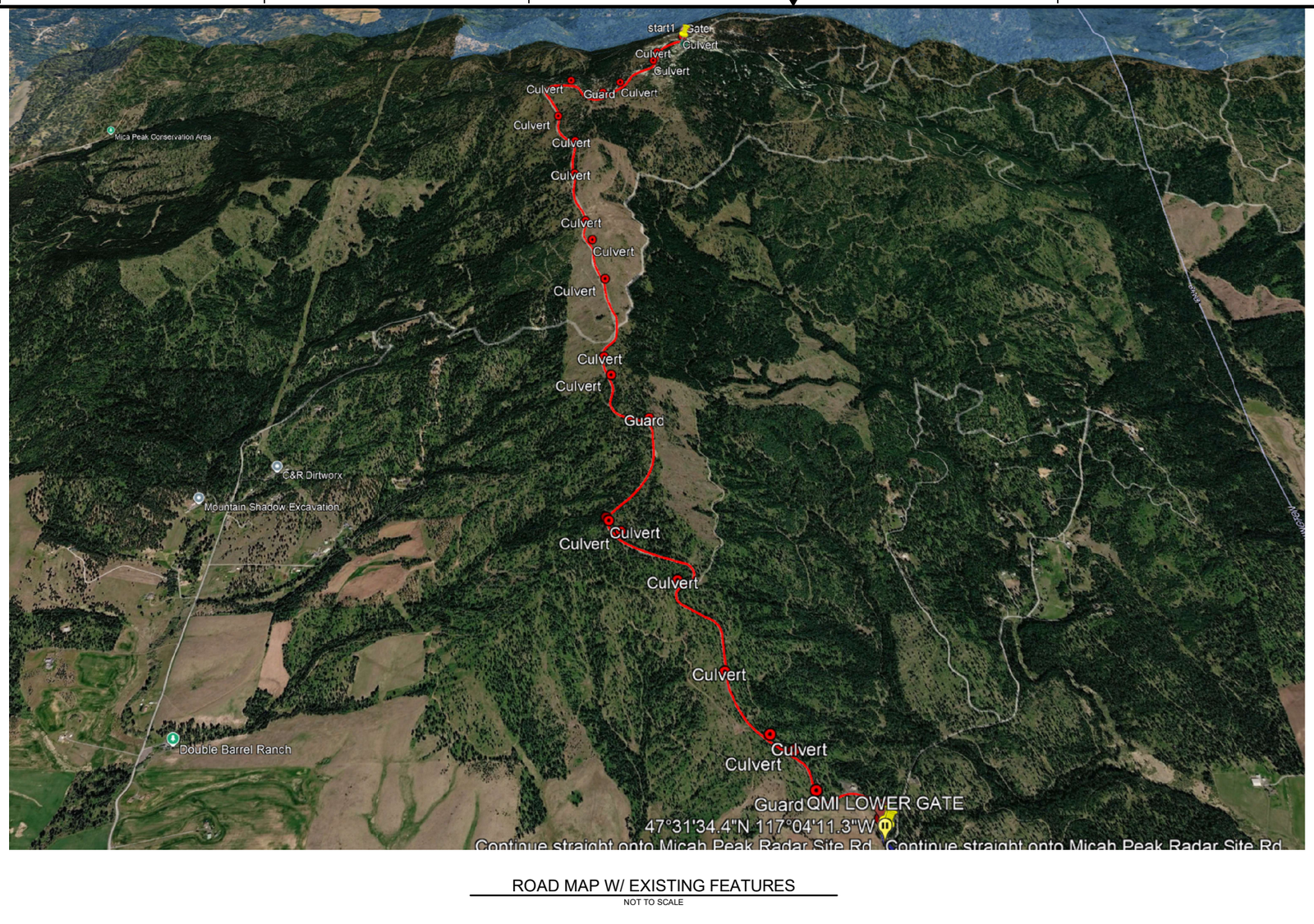


ROAD MAP W/ EXISTING FEATURES

NOT TO SCALE




ROAD PROFILE

NOT TO SCALE

| REV | APPROVED DATE | DESCRIPTION | JCN | REDLINE DATE | APVD |
|---|---|---|---|---|---|

DEPARTMENT OF TRANSPORTATION
FEDERAL AVIATION ADMINISTRATION

ATO - TECHNICAL OPERATIONS — WESTERN SERVICE AREA

ARSR

REPLACE GUARDRAILS ALONG QMI ARSR ACCESS ROAD
EXISTING ROAD MAP & PROFILE

MICA PEAK — WA

REVIEWED BY | SUBMITTED BY | APPROVED BY

PROJECT ENGINEER | MGR: ENGINEERING - SEATTLE

DESIGNED | ISSUED BY: ENGINEERING SERVICES INFRASTRUCTURE | DATE | JCN 1603949

DRAWN | DRAWING NO QMI-1603949-C002 | REV

CHECKED

CONSTRUCTION

ISSUED FOR:

$NAMES $TIMES $TILES$ $LATES

EDM: QMI-1603949-C002.dwg

START POINT:
QMI ARSR FACILITY GATE
47°34'27.7"N 117°04'51.4"W

1100± LF NEW GUARDRAIL
APPROXIMATE START POINT:
420FT DOWNHILL OF QMI ARSR
FACILITY GATE

U/G POWER LINE
THE EXACT LOCATION TO
BE FIELD VERIFIED

LAST ABOVE GROUND
POWER LINE POLE
G POWER POLE# 459568 /
9

150± LF REPLACED GUARDRAIL
(SAME AMOUNT OF DAMAGED
GUARDRAIL TO BE DEMOLISHED
AND REMOVED)
APPROXIMATE START POINT:
0.3 MILE DOWNHILL OF QMI ARSR
FACILITY GATE

180± LF NEW GUARDRAIL
APPROXIMATE START POINT:
0.65 MILE DOWNHILL OF QMI ARSR
FACILITY GATE

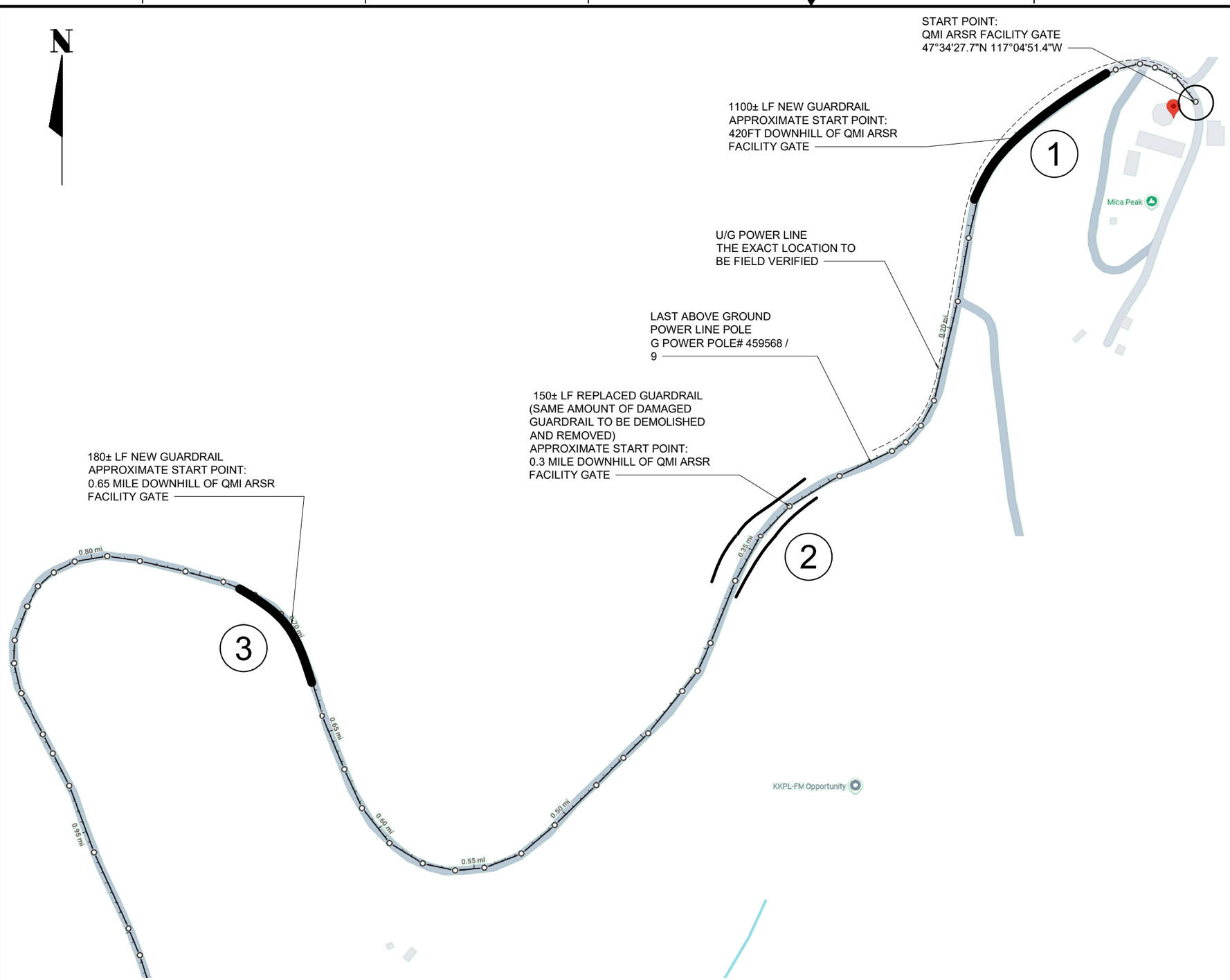


ROAD STA.0.00~1.05 MILE DOWNHILL OF GATE
NOT TO SCALE

## CONSTRUCTION NOTES:

(A) COORDINATE WITH FAA AND WASHINGTON ONE CALL SERVICE AND PROCURE THIRD PARTY UTILITY LOCATING SERVICE TO LOCATE ALL UNDERGROUND CABLES (INCLUDING TELCO LINE, POWER LINE AND U/G UTILITIES) PRIOR TO ANY CONSTRUCTION ACTIVITY.

(B) CONSTRUCTION AND INSTALLATION OF NEW GUARDRAILS INCLUDES THE NEW OR REPLACEMENT OF THE EXISTING DAMAGED RAILS AT MICKA PEAK ACCESS ROAD AS INDICATED IN C001~C008.

(C) PREPARE THE SITE FOR CONSTRUCTION OF NEW GUARDRAIL AT LOCATIONS SHOWN. COORDINATE WITH RE & SSC TO LOCATE AND SETUP THE STAGING AREA AND TEMPORARY FACILITIES. CONTRACTOR TO COORDINATE WITH RE FOR ACCESS ROUTE AS NEEDED.

(D) THE LOCATION OF THE NEW REPLACEMENT GUARDRAILS IS TENTATIVE. CONTRACTOR SHALL COORDINATE WITH SSC & RE FOR FINAL LOCATION. VERIFY SITE UTILITIES BEFORE START OF EXCAVATION.

(E) INSTALLATION OF NEW BARRIER INCLUDES BUT IS NOT LIMITED TO INSTALLING WBEAMS, SUPPORTS, AND EARTHWORK INCLUDING EXCAVATION AND BACKFILL WITH THESE CONSTRUCTION DRAWINGS AND STANDARDS ATTACHED TO.

(F) CONTRACTOR SHALL HAND DIG TO LOCATE ALL UNDERGROUND CABLES WHEN EXCAVATION AROUND EXISTING STRUCTURES.

(G) BACK FILL ALL HOLES CREATED BY CONSTRUCTION. COMPACT THE SOIL (INSIDE THE ROAD AREA) TO 95% DENSITY AND PATCH THE AFFECTED AREA TO MATCH EXISTING GRADE AND ADJACENT PAVING MATERIAL.

## DEMOLITION / SITE CLEAN UP NOTES

(H) PREPARE THE AREA FOR DEMOLITION OF EXISTING GUARDRAILS AS REQUIRED. PROTECT ALL EXISTING UTILITIES. DEMOLISH EXISTING DAMAGED GUARDRAILS AS SHOWN. VERIFY THE LOCATION WITH RE PRIOR TO DEMOLITION.

(I) BACK FILL ALL HOLES CREATED BY CONSTRUCTION AND DEMOLITION. COMPACT THE SOIL AND PATCH THE AFFECTED AREA TO MATCH EXISTING GRADE AND ADJACENT PAVING MATERIAL.

(J) DISCARD ALL OBSOLETE MATERIAL PROPERLY. COORDINATE WITH RE AND SSC.

NEW GUARDRAIL
(1) 1100± LF NEW GUARDRAIL
(3) 180± LF NEW GUARDRAIL

DEMOLISH/ REPLACED
(2) 150± LF REPLACED GUARDRAIL

EXISTING U/G POWER LINE

10' 0 10' 20'
SCALE: 1" = 10'

| REV | APPROVED DATE | DESCRIPTION | JCN | REDLINE DATE | APVD |
|---|---|---|---|---|---|

DEPARTMENT OF TRANSPORTATION
FEDERAL AVIATION ADMINISTRATION
ATO - TECHNICAL OPERATIONS — WESTERN SERVICE AREA

ARSR

REPLACE GUARDRAILS ALONG QMI ARSR ACCESS ROAD
STATION: 0.00 TO 1.05 MILE

MICA PEAK — WA

REVIEWED BY | SUBMITTED BY | APPROVED BY
PROJECT ENGINEER | MGR: ENGINEERING - SEATTLE
DESIGNED | ISSUED BY: ENGINEERING SERVICES INFRASTRUCTURE | DATE | JCN 1603949
DRAWN | DRAWING NO: QMI-1603949-C003 | REV
CHECKED

CONSTRUCTION
ISSUED FOR:

$STILESS $STATES $TIMES $NAMES

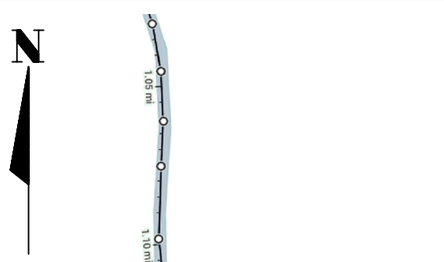

1600± LF NEW GUARDRAIL
APPROXIMATE START POINT:
1.70 MILE DOWNHILL OF QMI ARSR
FACILITY GATE

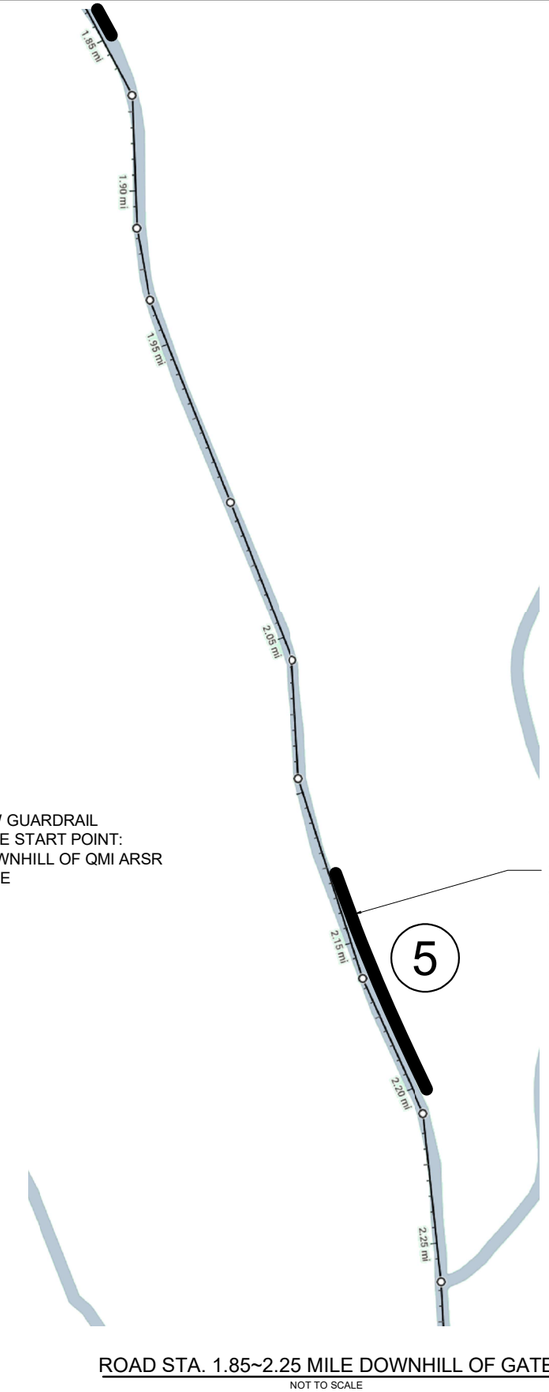


350± LF NEW GUARDRAIL
APPROXIMATE START POINT:
2.1 MILE DOWNHILL OF QMI ARSR
FACILITY GATE

## CONSTRUCTION NOTES:

(A) COORDINATE WITH FAA AND WASHINGTON ONE CALL SERVICE AND PROCURE THIRD PARTY UTILITY LOCATING SERVICE TO LOCATE ALL UNDERGROUND CABLES (INCLUDING TELCO LINE, POWER LINE AND U/G UTILITIES) PRIOR TO ANY CONSTRUCTION ACTIVITY.

(B) CONSTRUCTION AND INSTALLATION OF NEW GUARDRAILS INCLUDES THE NEW OR REPLACEMENT OF THE EXISTING DAMAGED RAILS AT MICKA PEAK ACCESS ROAD AS INDICATED IN C001~C008.

(C) PREPARE THE SITE FOR CONSTRUCTION OF NEW GUARDRAIL AT LOCATIONS SHOWN. COORDINATE WITH RE & SSC TO LOCATE AND SETUP THE STAGING AREA AND TEMPORARY FACILITIES. CONTRACTOR TO COORDINATE WITH RE FOR ACCESS ROUTE AS NEEDED.

(D) THE LOCATION OF THE NEW REPLACEMENT GUARDRAILS IS TENTATIVE. CONTRACTOR SHALL COORDINATE WITH SSC & RE FOR FINAL LOCATION. VERIFY SITE UTILITIES BEFORE START OF EXCAVATION.

(E) INSTALLATION OF NEW BARRIER INCLUDES BUT IS NOT LIMITED TO INSTALLING WBEAMS, SUPPORTS, AND EARTHWORK INCLUDING EXCAVATION AND BACKFILL WITH THESE CONSTRUCTION DRAWINGS AND STANDARDS ATTACHED TO.

(F) CONTRACTOR SHALL HAND DIG TO LOCATE ALL UNDERGROUND CABLES WHEN EXCAVATION AROUND EXISTING STRUCTURES.

(G) BACK FILL ALL HOLES CREATED BY CONSTRUCTION. COMPACT THE SOIL (INSIDE THE ROAD AREA) TO 95% DENSITY AND PATCH THE AFFECTED AREA TO MATCH EXISTING GRADE AND ADJACENT PAVING MATERIAL.

## DEMOLITION / SITE CLEAN UP NOTES

(H) PREPARE THE AREA FOR DEMOLITION OF EXISTING GUARDRAILS AS REQUIRED. PROTECT ALL EXISTING UTILITIES. DEMOLISH EXISTING DAMAGED GUARDRAILS AS SHOWN. VERIFY THE LOCATION WITH RE PRIOR TO DEMOLITION.

(I) BACK FILL ALL HOLES CREATED BY CONSTRUCTION AND DEMOLITION. COMPACT THE SOIL AND PATCH THE AFFECTED AREA TO MATCH EXISTING GRADE AND ADJACENT PAVING MATERIAL.

(J) DISCARD ALL OBSOLETE MATERIAL PROPERLY. COORDINATE WITH RE AND SSC.

## NEW GUARDRAIL

(4) 1600± LF NEW GUARDRAIL

(5) 350± LF NEW GUARDRAIL

ROAD STA. 1.05 ~1.45 MILE DOWNHILL OF GATE
NOT TO SCALE

ROAD STA. 1.45 ~1.85 MILE DOWNHILL OF GATE
NOT TO SCALE

ROAD STA. 1.85~2.25 MILE DOWNHILL OF GATE
NOT TO SCALE

| REV | APPROVED DATE | DESCRIPTION | JCN | REDLINE DATE | APVD |
|---|---|---|---|---|---|

DEPARTMENT OF TRANSPORTATION
FEDERAL AVIATION ADMINISTRATION
ATO - TECHNICAL OPERATIONS — WESTERN SERVICE AREA

ARSR

REPLACE GUARDRAILS ALONG QMI ARSR ACCESS ROAD
STATION: 1.05MILE TO 2.25MILE

MICA PEAK — WA

REVIEWED BY | SUBMITTED BY | APPROVED BY
PROJECT ENGINEER | MGR: ENGINEERING - SEATTLE
DESIGNED | ISSUED BY: ENGINEERING SERVICES INFRASTRUCTURE | DATE | JCN 1603949
DRAWN | DRAWING NO QMI-1603949-C004 | REV
CHECKED

CONSTRUCTION
ISSUED FOR:

$FILESS
$DATES
$TIME$
$NAME$

EDM: QMI-1603949-C004.dwg

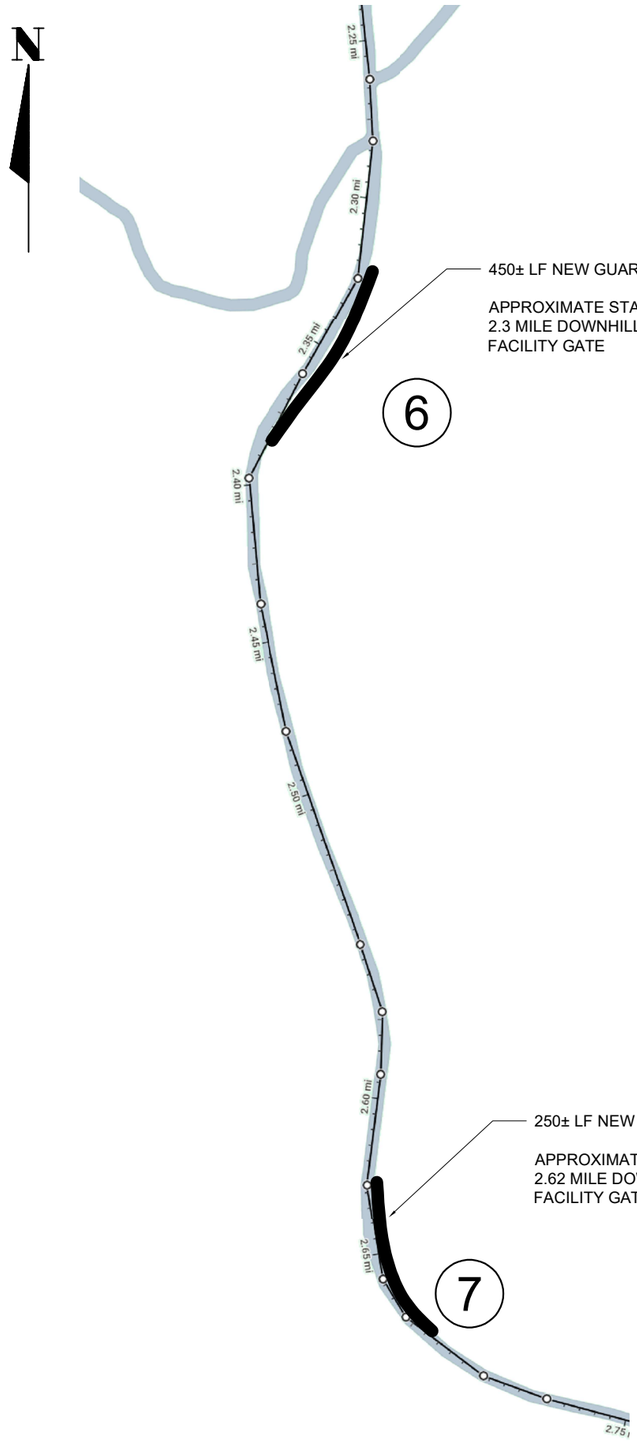


ROAD STA.2.25~2.75 MILE DOWNHILL OF GATE

NOT TO SCALE

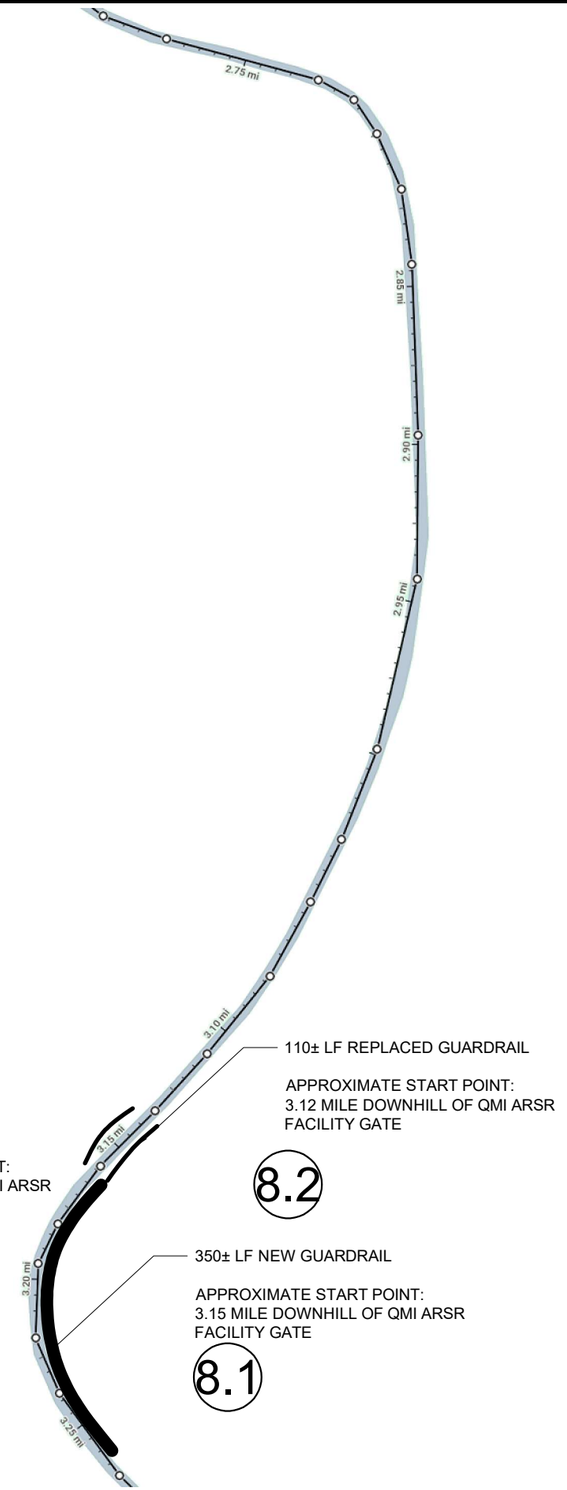


ROAD STA. 2.75~3.25 MILE DOWNHILL OF GATE

NOT TO SCALE

## CONSTRUCTION NOTES:

(A) COORDINATE WITH FAA AND WASHINGTON ONE CALL SERVICE AND PROCURE THIRD PARTY UTILITY LOCATING SERVICE TO LOCATE ALL UNDERGROUND CABLES (INCLUDING TELCO LINE, POWER LINE AND U/G UTILITIES) PRIOR TO ANY CONSTRUCTION ACTIVITY.

(B) CONSTRUCTION AND INSTALLATION OF NEW GUARDRAILS INCLUDES THE NEW OR REPLACEMENT OF THE EXISTING DAMAGED RAILS AT MICKA PEAK ACCESS ROAD AS INDICATED IN C001~C008.

(C) PREPARE THE SITE FOR CONSTRUCTION OF NEW GUARDRAIL AT LOCATIONS SHOWN. COORDINATE WITH RE & SSC TO LOCATE AND SETUP THE STAGING AREA AND TEMPORARY FACILITIES. CONTRACTOR TO COORDINATE WITH RE FOR ACCESS ROUTE AS NEEDED.

(D) THE LOCATION OF THE NEW REPLACEMENT GUARDRAILS IS TENTATIVE. CONTRACTOR SHALL COORDINATE WITH SSC & RE FOR FINAL LOCATION. VERIFY SITE UTILITIES BEFORE START OF EXCAVATION.

(E) INSTALLATION OF NEW BARRIER INCLUDES BUT IS NOT LIMITED TO INSTALLING WBEAMS, SUPPORTS, AND EARTHWORK INCLUDING EXCAVATION AND BACKFILL WITH THESE CONSTRUCTION DRAWINGS AND STANDARDS ATTACHED TO.

(F) CONTRACTOR SHALL HAND DIG TO LOCATE ALL UNDERGROUND CABLES WHEN EXCAVATION AROUND EXISTING STRUCTURES.

(G) BACK FILL ALL HOLES CREATED BY CONSTRUCTION. COMPACT THE SOIL (INSIDE THE ROAD AREA) TO 95% DENSITY AND PATCH THE AFFECTED AREA TO MATCH EXISTING GRADE AND ADJACENT PAVING MATERIAL.

## DEMOLITION / SITE CLEAN UP NOTES

(H) PREPARE THE AREA FOR DEMOLITION OF EXISTING GUARDRAILS AS REQUIRED. PROTECT ALL EXISTING UTILITIES. DEMOLISH EXISTING DAMAGED GUARDRAILS AS SHOWN. VERIFY THE LOCATION WITH RE PRIOR TO DEMOLITION.

(I) BACK FILL ALL HOLES CREATED BY CONSTRUCTION AND DEMOLITION. COMPACT THE SOIL AND PATCH THE AFFECTED AREA TO MATCH EXISTING GRADE AND ADJACENT PAVING MATERIAL.

(J) DISCARD ALL OBSOLETE MATERIAL PROPERLY. COORDINATE WITH RE AND SSC.

NEW GUARDRAIL

(6) 450± LF NEW GUARDRAIL

(7) 250± LF NEW GUARDRAIL

(8.1) 350± LF NEW GUARD RAIL

DEMOLISH/ REPLACED

(8.2) 110± LF REPLACED GUARDRAIL

| REV | APPROVED DATE | DESCRIPTION | JCN | REDLINE DATE | APVD |
|---|---|---|---|---|---|

DEPARTMENT OF TRANSPORTATION
FEDERAL AVIATION ADMINISTRATION

ATO - TECHNICAL OPERATIONS — WESTERN SERVICE AREA

ARSR

REPLACE GUARDRAILS ALONG QMI ARSR ACCESS ROAD
STATION: 2.25MILE TO 3.25MILE

MICA PEAK — WA

| REVIEWED BY | SUBMITTED BY | APPROVED BY |
|---|---|---|
| | PROJECT ENGINEER | MGR: ENGINEERING - SEATTLE |

| DESIGNED | ISSUED BY | DATE | JCN |
|---|---|---|---|
| DRAWN | ENGINEERING SERVICES INFRASTRUCTURE | DRAWING NO | REV |
| CHECKED | | QMI-1603949-C005 | |

CONSTRUCTION

ISSUED FOR:

$FILES$ $DATES $TIMES $NAMES

EDMS: QMI-1603949-C005.dwg

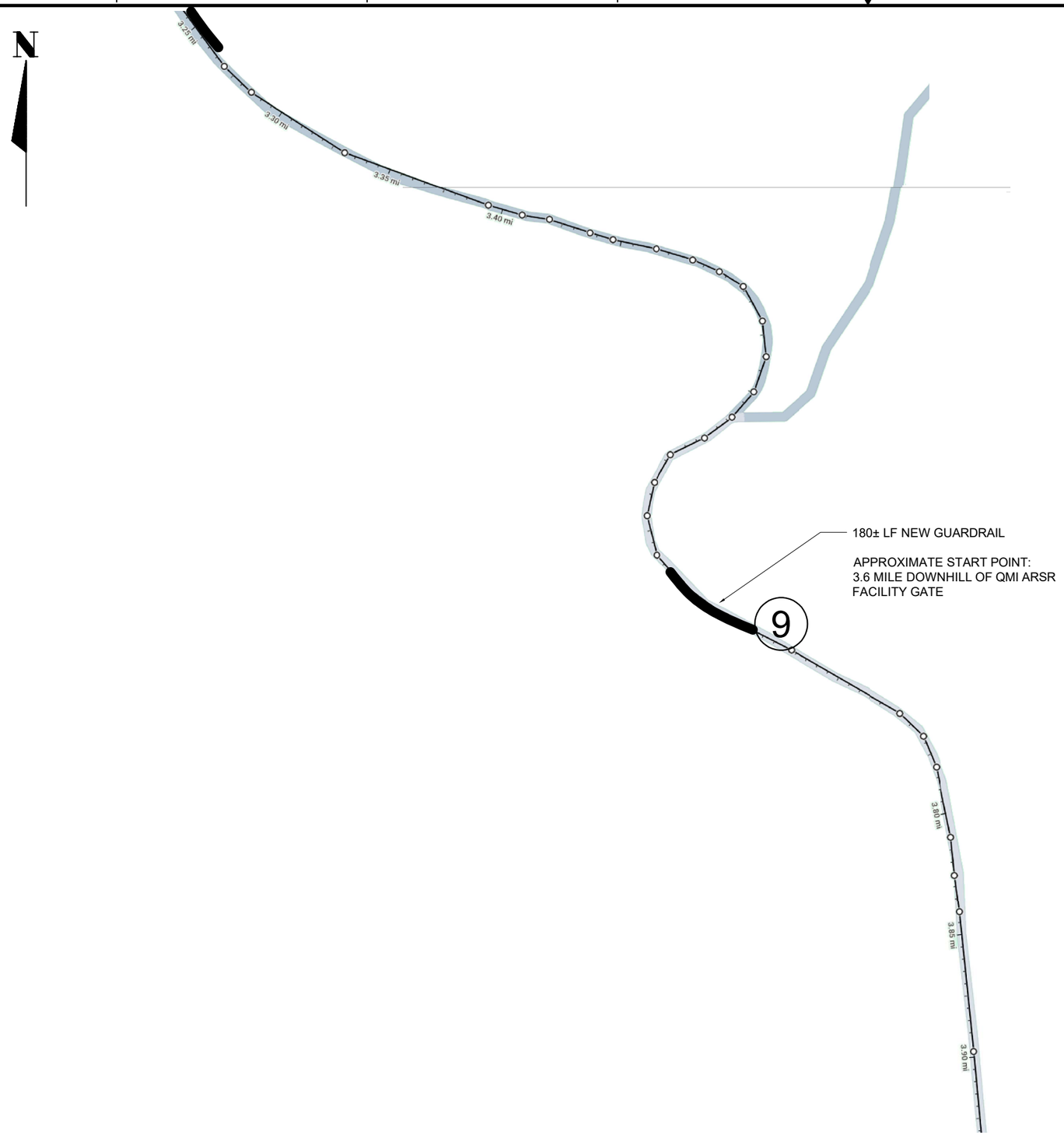


ROAD STA. 3.25~3.90 MILE DOWNHILL OF GATE

NOT TO SCALE

## CONSTRUCTION NOTES:

(A) COORDINATE WITH FAA AND WASHINGTON ONE CALL SERVICE AND PROCURE THIRD PARTY UTILITY LOCATING SERVICE TO LOCATE ALL UNDERGROUND CABLES (INCLUDING TELCO LINE, POWER LINE AND U/G UTILITIES) PRIOR TO ANY CONSTRUCTION ACTIVITY.

(B) CONSTRUCTION AND INSTALLATION OF NEW GUARDRAILS INCLUDES THE NEW OR REPLACEMENT OF THE EXISTING DAMAGED RAILS AT MICKA PEAK ACCESS ROAD AS INDICATED IN C001~C008.

(C) PREPARE THE SITE FOR CONSTRUCTION OF NEW GUARDRAIL AT LOCATIONS SHOWN. COORDINATE WITH RE & SSC TO LOCATE AND SETUP THE STAGING AREA AND TEMPORARY FACILITIES. CONTRACTOR TO COORDINATE WITH RE FOR ACCESS ROUTE AS NEEDED.

(D) THE LOCATION OF THE NEW REPLACEMENT GUARDRAILS IS TENTATIVE. CONTRACTOR SHALL COORDINATE WITH SSC & RE FOR FINAL LOCATION. VERIFY SITE UTILITIES BEFORE START OF EXCAVATION.

(E) INSTALLATION OF NEW BARRIER INCLUDES BUT IS NOT LIMITED TO INSTALLING WBEAMS, SUPPORTS, AND EARTHWORK INCLUDING EXCAVATION AND BACKFILL WITH THESE CONSTRUCTION DRAWINGS AND STANDARDS ATTACHED TO.

(F) CONTRACTOR SHALL HAND DIG TO LOCATE ALL UNDERGROUND CABLES WHEN EXCAVATION AROUND EXISTING STRUCTURES.

(G) BACK FILL ALL HOLES CREATED BY CONSTRUCTION. COMPACT THE SOIL (INSIDE THE ROAD AREA) TO 95% DENSITY AND PATCH THE AFFECTED AREA TO MATCH EXISTING GRADE AND ADJACENT PAVING MATERIAL.

NEW GUARDRAIL

(9) 180± LF NEW GUARDRAIL

| REV | APPROVED DATE | DESCRIPTION | JCN | REDLINE DATE | APVD |
|---|---|---|---|---|---|

DEPARTMENT OF TRANSPORTATION
FEDERAL AVIATION ADMINISTRATION

ATO - TECHNICAL OPERATIONS — WESTERN SERVICE AREA

ARSR

REPLACE GUARDRAILS ALONG QMI ARSR ACCESS ROAD
STATION: 3.25MILE TO 3.90MILE

MICA PEAK — WA

| REVIEWED BY | SUBMITTED BY | APPROVED BY |
|---|---|---|
| | PROJECT ENGINEER | MGR: ENGINEERING - SEATTLE |

| DESIGNED | ISSUED BY | DATE | JCN |
|---|---|---|---|
| DRAWN | ENGINEERING SERVICES INFRASTRUCTURE | DRAWING NO | REV |
| CHECKED | | QMI-1603949-C006 | |

ISSUED FOR: CONSTRUCTION

$NAME$ $TIME$ $DATE$ $FILES$

EDM: QMI-1603949-C006.dwg

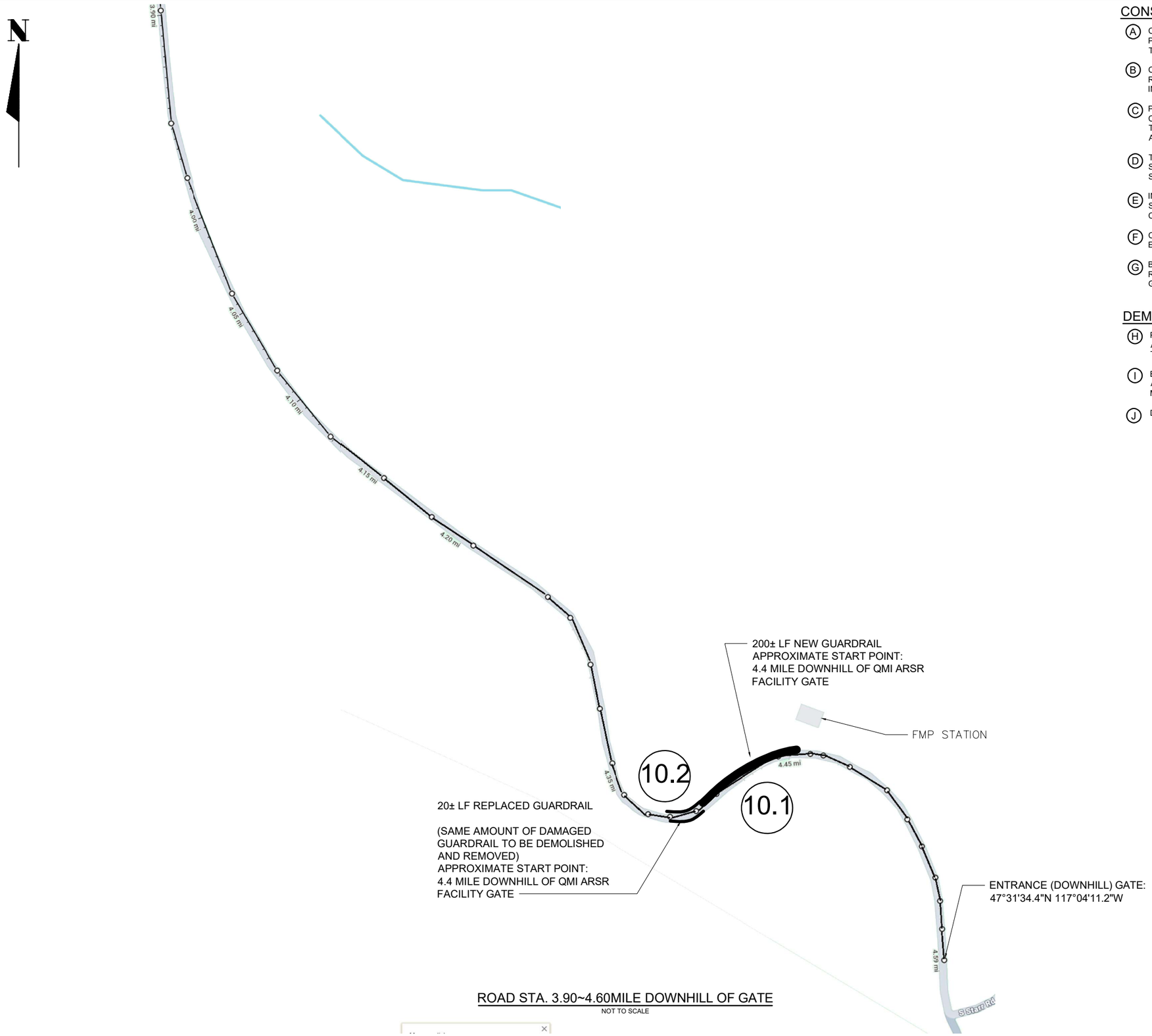


ROAD STA. 3.90~4.60MILE DOWNHILL OF GATE

NOT TO SCALE

## CONSTRUCTION NOTES:

(A) COORDINATE WITH FAA AND WASHINGTON ONE CALL SERVICE AND PROCURE THIRD PARTY UTILITY LOCATING SERVICE TO LOCATE ALL UNDERGROUND CABLES (INCLUDING TELCO LINE, POWER LINE AND U/G UTILITIES) PRIOR TO ANY CONSTRUCTION ACTIVITY.

(B) CONSTRUCTION AND INSTALLATION OF NEW GUARDRAILS INCLUDES THE NEW OR REPLACEMENT OF THE EXISTING DAMAGED RAILS AT MICKA PEAK ACCESS ROAD AS INDICATED IN C001~C008.

(C) PREPARE THE SITE FOR CONSTRUCTION OF NEW GUARDRAIL AT LOCATIONS SHOWN. COORDINATE WITH RE & SSC TO LOCATE AND SETUP THE STAGING AREA AND TEMPORARY FACILITIES. CONTRACTOR TO COORDINATE WITH RE FOR ACCESS ROUTE AS NEEDED.

(D) THE LOCATION OF THE NEW REPLACEMENT GUARDRAILS IS TENTATIVE. CONTRACTOR SHALL COORDINATE WITH SSC & RE FOR FINAL LOCATION. VERIFY SITE UTILITIES BEFORE START OF EXCAVATION.

(E) INSTALLATION OF NEW BARRIER INCLUDES BUT IS NOT LIMITED TO INSTALLING WBEAMS, SUPPORTS, AND EARTHWORK INCLUDING EXCAVATION AND BACKFILL WITH THESE CONSTRUCTION DRAWINGS AND STANDARDS ATTACHED TO.

(F) CONTRACTOR SHALL HAND DIG TO LOCATE ALL UNDERGROUND CABLES WHEN EXCAVATION AROUND EXISTING STRUCTURES.

(G) BACK FILL ALL HOLES CREATED BY CONSTRUCTION. COMPACT THE SOIL (INSIDE THE ROAD AREA) TO 95% DENSITY AND PATCH THE AFFECTED AREA TO MATCH EXISTING GRADE AND ADJACENT PAVING MATERIAL.

## DEMOLITION / SITE CLEAN UP NOTES

(H) PREPARE THE AREA FOR DEMOLITION OF EXISTING GUARDRAILS AS REQUIRED. PROTECT ALL EXISTING UTILITIES. DEMOLISH EXISTING DAMAGED GUARDRAILS AS SHOWN. VERIFY THE LOCATION WITH RE PRIOR TO DEMOLITION.

(I) BACK FILL ALL HOLES CREATED BY CONSTRUCTION AND DEMOLITION. COMPACT THE SOIL AND PATCH THE AFFECTED AREA TO MATCH EXISTING GRADE AND ADJACENT PAVING MATERIAL.

(J) DISCARD ALL OBSOLETE MATERIAL PROPERLY. COORDINATE WITH RE AND SSC.

NEW GUARDRAIL

(10.1) 200± LF NEW GUARDRAIL

DEMOLISH/ REPLACED

(10.2) 20± LF REPLACED GUARDRAIL

| REV | APPROVED DATE | DESCRIPTION | JCN | REDLINE DATE | APVD |
|---|---|---|---|---|---|

DEPARTMENT OF TRANSPORTATION
FEDERAL AVIATION ADMINISTRATION

ATO - TECHNICAL OPERATIONS — WESTERN SERVICE AREA

ARSR

REPLACE GUARDRAILS ALONG QMI ARSR ACCESS ROAD
STATION: 3.90MILE TO 4.60MILE

MICA PEAK — WA

| | | |
|---|---|---|
| REVIEWED BY | SUBMITTED BY | APPROVED BY |
| | PROJECT ENGINEER | MGR: ENGINEERING - SEATTLE |
| DESIGNED | ISSUED BY | DATE / JCN 1603949 |
| DRAWN | ENGINEERING SERVICES INFRASTRUCTURE | DRAWING NO. QMI-1603949-C007 / REV |
| CHECKED | | |

CONSTRUCTION

ISSUED FOR:

EDM: QMI-1603949-C007.dwg

$FILES$ $DATES$ $TIME$ $NAME$

| PROJECT | SHEET NUMBER |
|---|---|
| | |

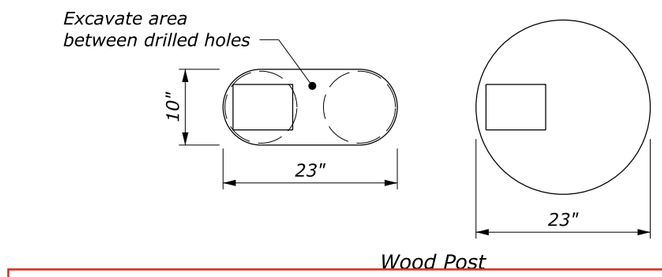


Wood Post

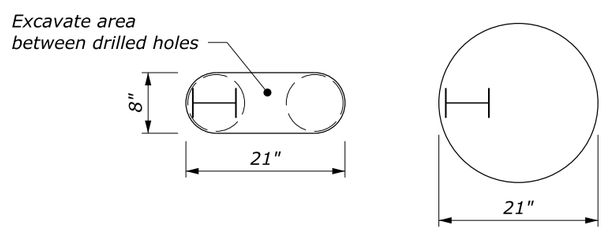


Steel Post

**PLAN VIEW**

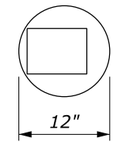


Wood Post

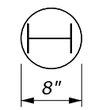


Steel Post

**PLAN VIEW**

## NOTE:

1. Use this standard when posts cannot be embedded to the minimum depth shown on Standard 617-10, 617-11, 617-31 or 617-32.
2. Unless otherwise specified, use either the circular or the oblong hole configuration for Case 1 conditions.
3. Use crushed coarse aggregate conforming to Section 703 "Coarse aggregate for concrete" or granular backfill for "Underdrain pipe with geotextile".
4. Place crushed coarse aggregate according to the post requirements in Section 617.
5. Treat field cut galvanized steel post surfaces that expose the base metal with two coats of zinc-oxide paint.

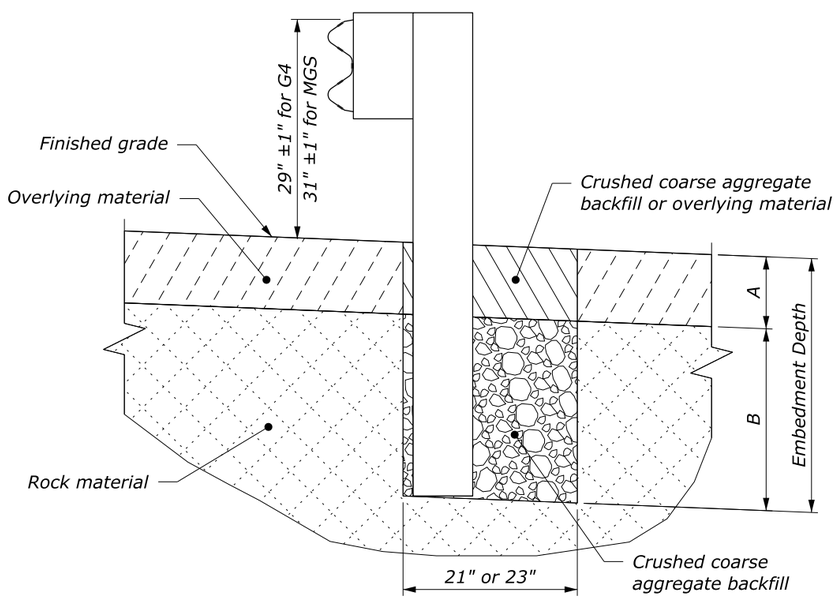


**ELEVATION**

Case 1: Overlying material depth (A) is 18" or less

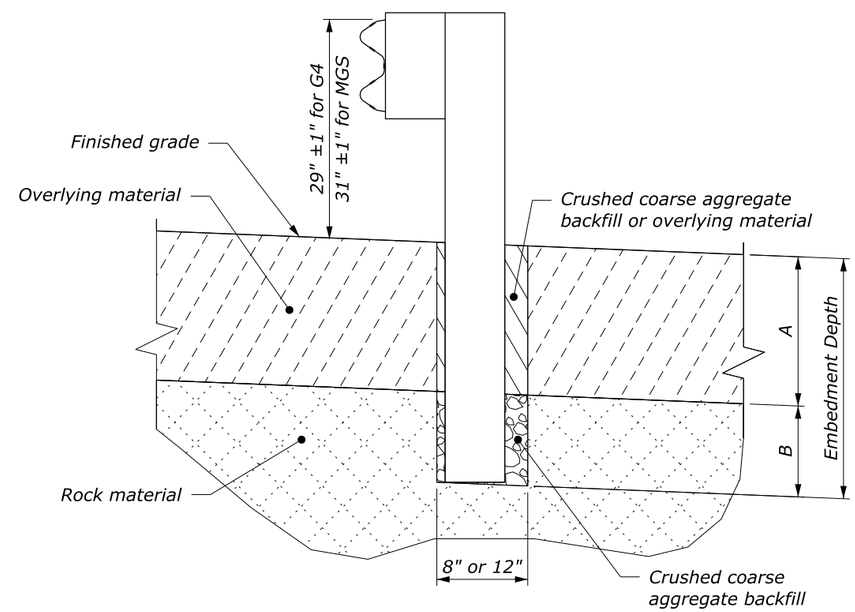


**ELEVATION**

Case 2: Overlying material depth (A) is greater than 18"

| POST EMBEDMENT DIMENSIONS | | | |
|---|---|---|---|
| HOLE TYPE | EMBEDMENT DEPTH | OVERLYING MATERIAL (A) | DRILLING DEPTH (B) |
| Case 1 | 24" to 42" | 0 to 18" | 24" |
| Case 2 | 30" to 42" | > 18" to 30" | 12" |
| | 42" | > 30" | 42" - A |

NO SCALE

U.S. DEPARTMENT OF TRANSPORTATION, FHWA
OFFICE OF FEDERAL LANDS HIGHWAY

**MGS AND G4**
**W-BEAM GUARDRAIL**
**INSTALLATION IN ROCK**

FLH STANDARD
617-13

SPECIFICATION
FP-24, FP-14

APPROVED FOR USE
1/2024

c:\pw-work\d0419223\Std617-13.dgn [Std 617-13]
15 July 2024 1:36 PM

| PROJECT | SHEET NUMBER |
|---|---|
| | |

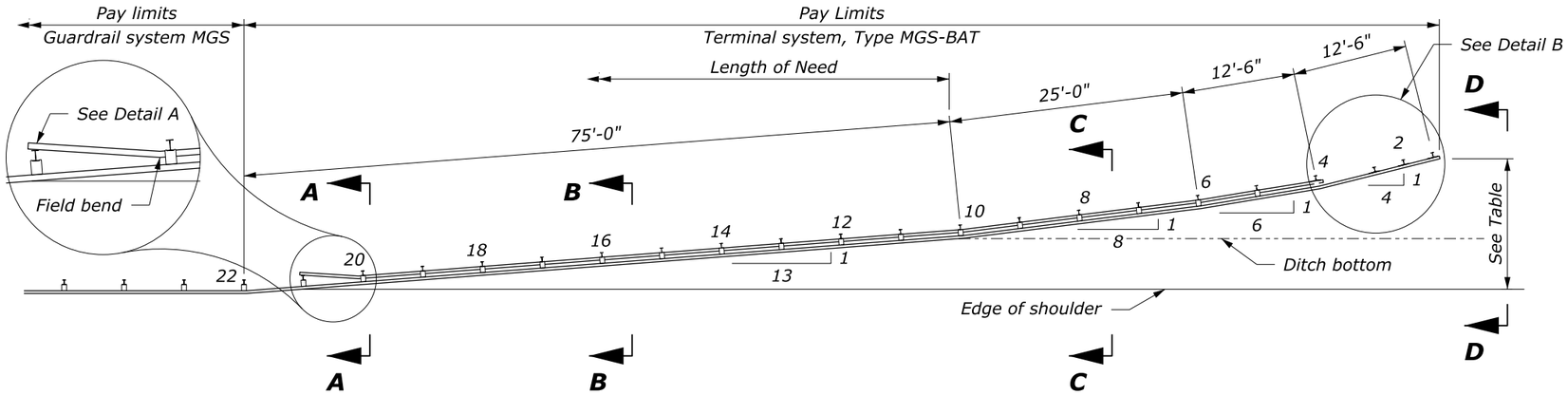


**PLAN**

## NOTE:

1. Typical post spacing is 6'-3" unless otherwise noted.
2. See Standard 617-31 (wood posts) and 617-32 (steel posts) for other details.

| POST OFFSETS FROM EDGE OF SHOULDER | |
|---|---|
| POST | DISTANCE |
| 1 | 13'-11¾" |
| 4 | 10'-11" |
| 6 | 8'-10¼" |
| 10 | 5'-9" |

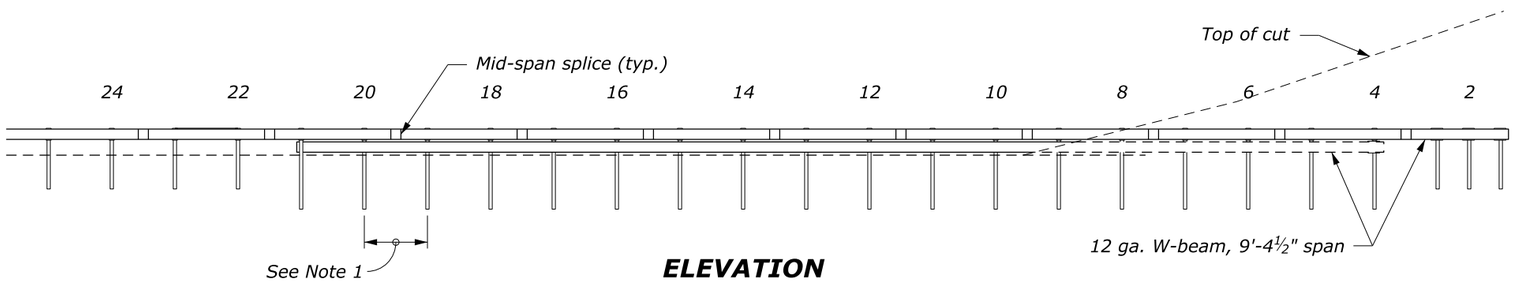


**ELEVATION**
ALONG RAIL

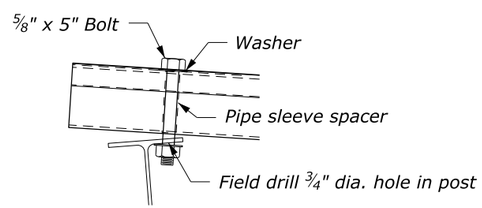


DETAIL A

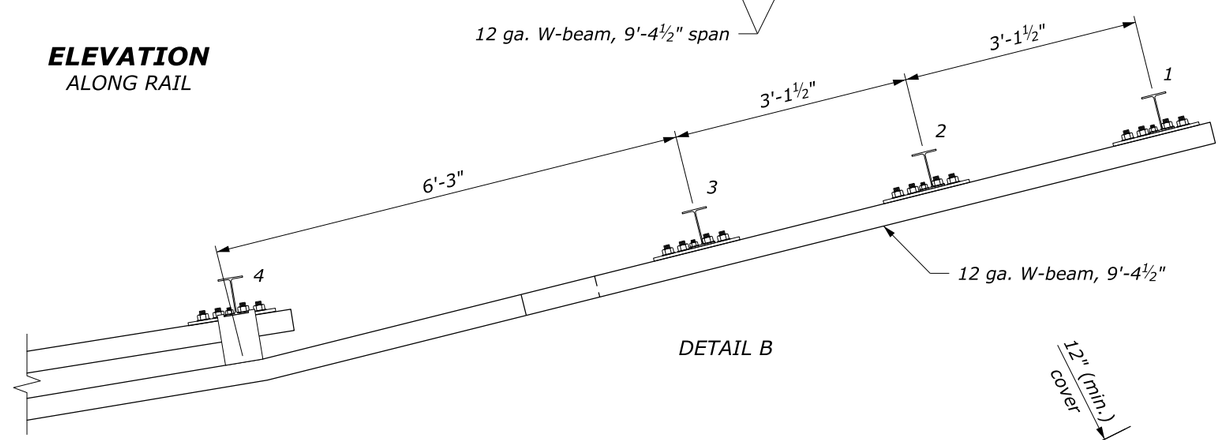


DETAIL B

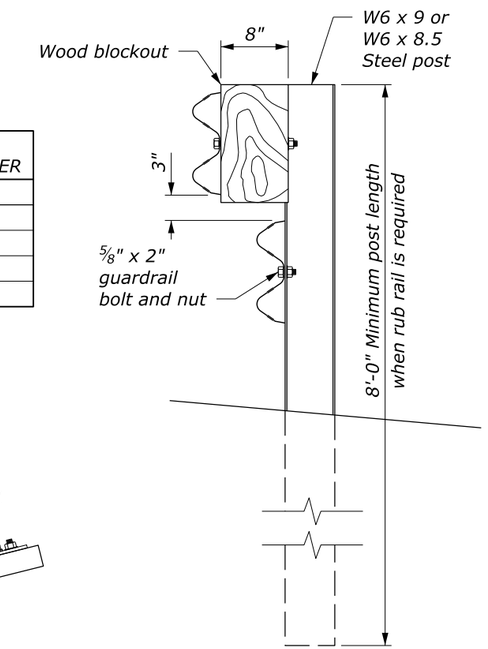


ELEVATION

**STEEL POST AND BLOCKOUT DETAIL**

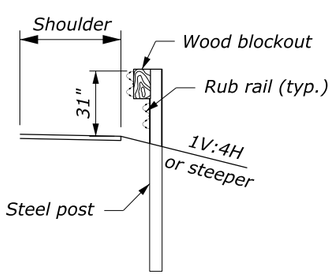


SECTION A-A

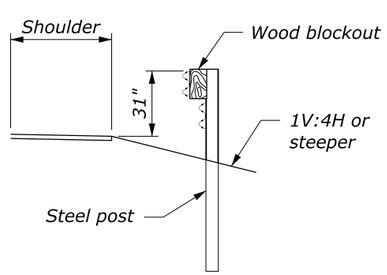


SECTION B-B

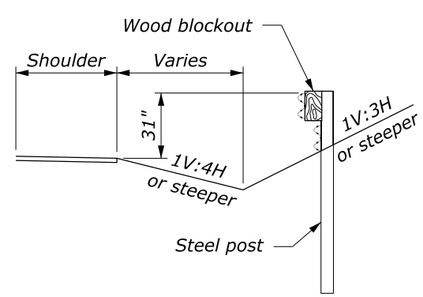


SECTION C-C

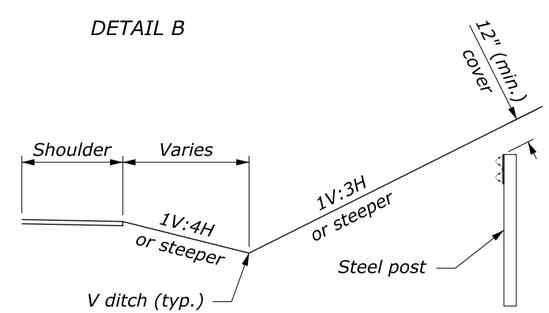


SECTION D-D

NO SCALE

U.S. DEPARTMENT OF TRANSPORTATION, FHWA
OFFICE OF FEDERAL LANDS HIGHWAY

**MGS W-BEAM GUARDRAIL**
**BACK SLOPE ANCHOR TERMINAL**
**TYPE MGS-BAT**
Sheet 1 of 2

FLH STANDARD
617-18

SPECIFICATION
FP-24

APPROVED FOR USE
2/2024

c:\pw-work\d0419223\Std617-18.dgn [Std 617-18a]
11 July 2024 12:39 PM

| PROJECT | SHEET NUMBER |
|---|---|
| | |

## NOTE:

1. See Sheet 1 of 2 for terminal layout.
2. Use zinc rich paint to coat field drilled holes.
3. Anchor plate and hardware are typical on top rail of Posts 1 -3 and rub rail at Post 4.

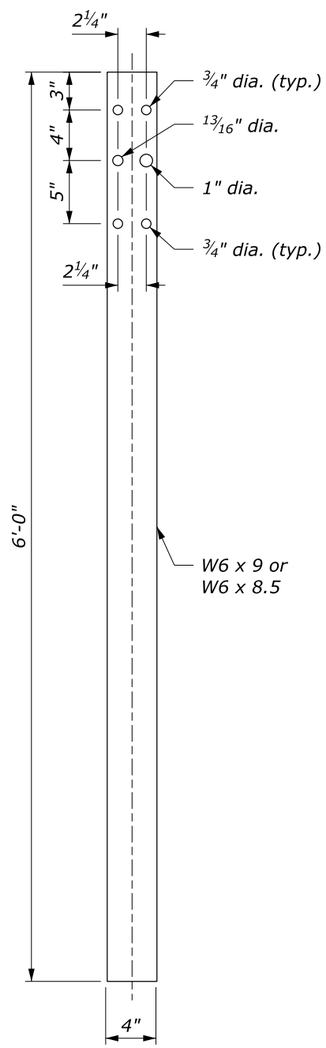


**POSTS 1-3**

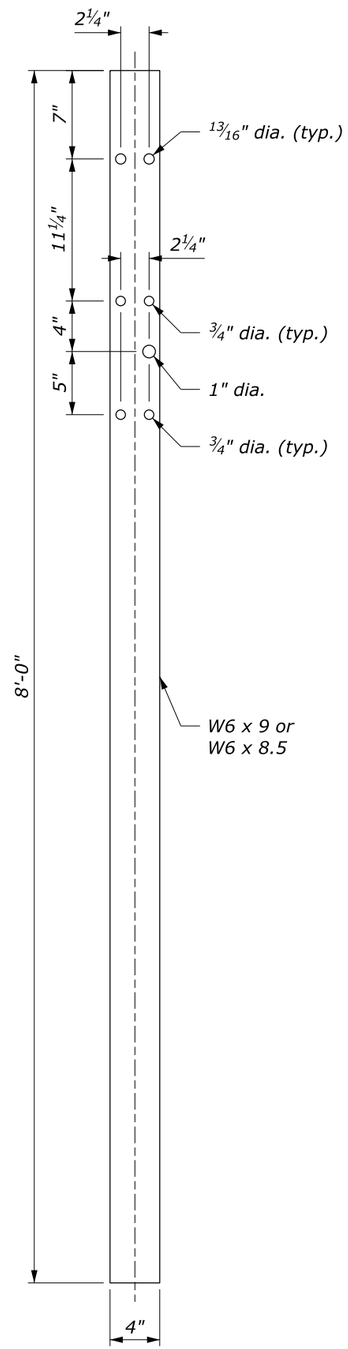


**POST 4**

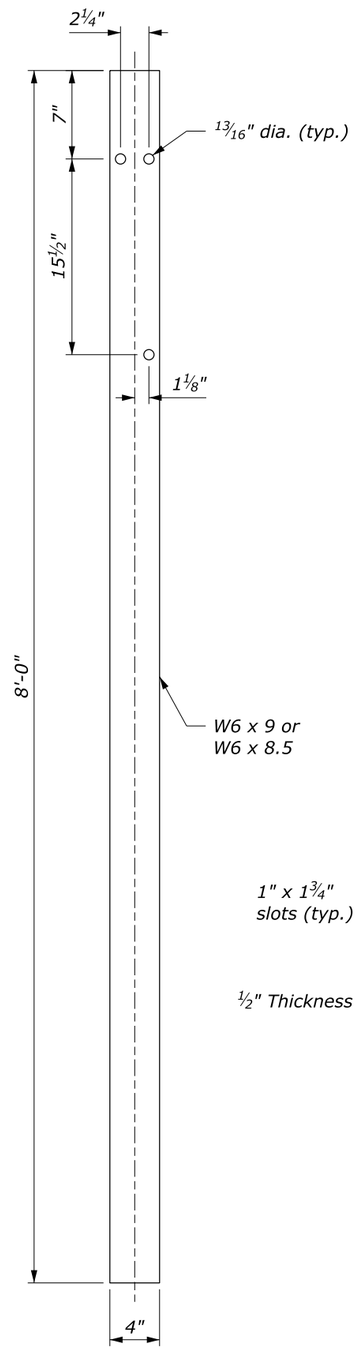


**POSTS 5-21**

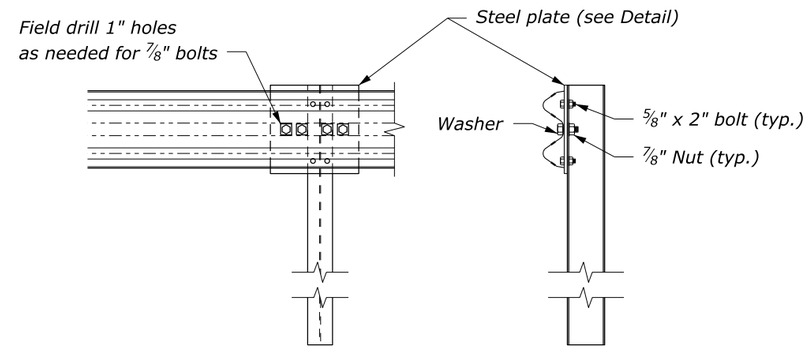


**SPECIAL RAIL TO POST CONNECTION AT POSTS 1, 2, AND 3**

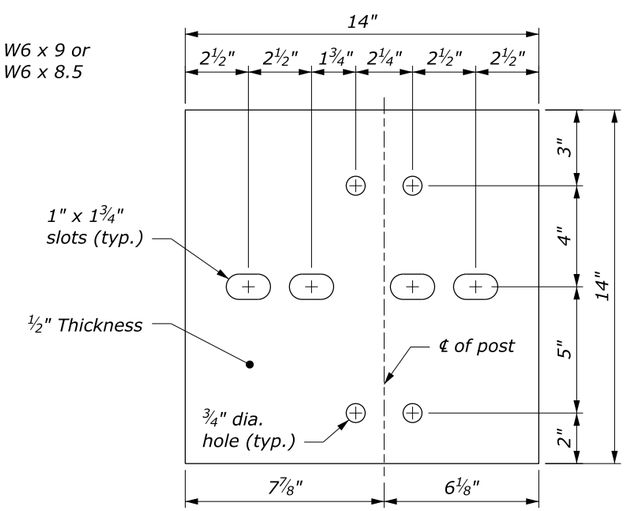


GALVANIZED STEEL PLATE

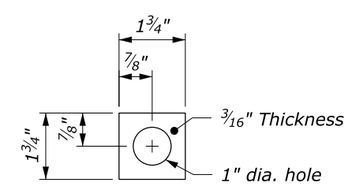


GALVANIZED SQUARE WASHER

**STEEL PLATE AND WASHER**
See Note 3

NO SCALE

| U.S. DEPARTMENT OF TRANSPORTATION, FHWA<br>OFFICE OF FEDERAL LANDS HIGHWAY | FLH STANDARD<br>617-18 |
|---|---|
| **MGS W-BEAM GUARDRAIL<br>BACK SLOPE ANCHOR TERMINAL<br>TYPE MGS-BAT**<br>Sheet 2 of 2 | SPECIFICATION<br>FP-24 |
| | APPROVED FOR USE<br>2/2024 |

c:\pw-work\d0419223\Std617-18.dgn {Std 617-18b}
11 July 2024 12:34 PM

| PROJECT | SHEET NUMBER |
|---|---|
| | |

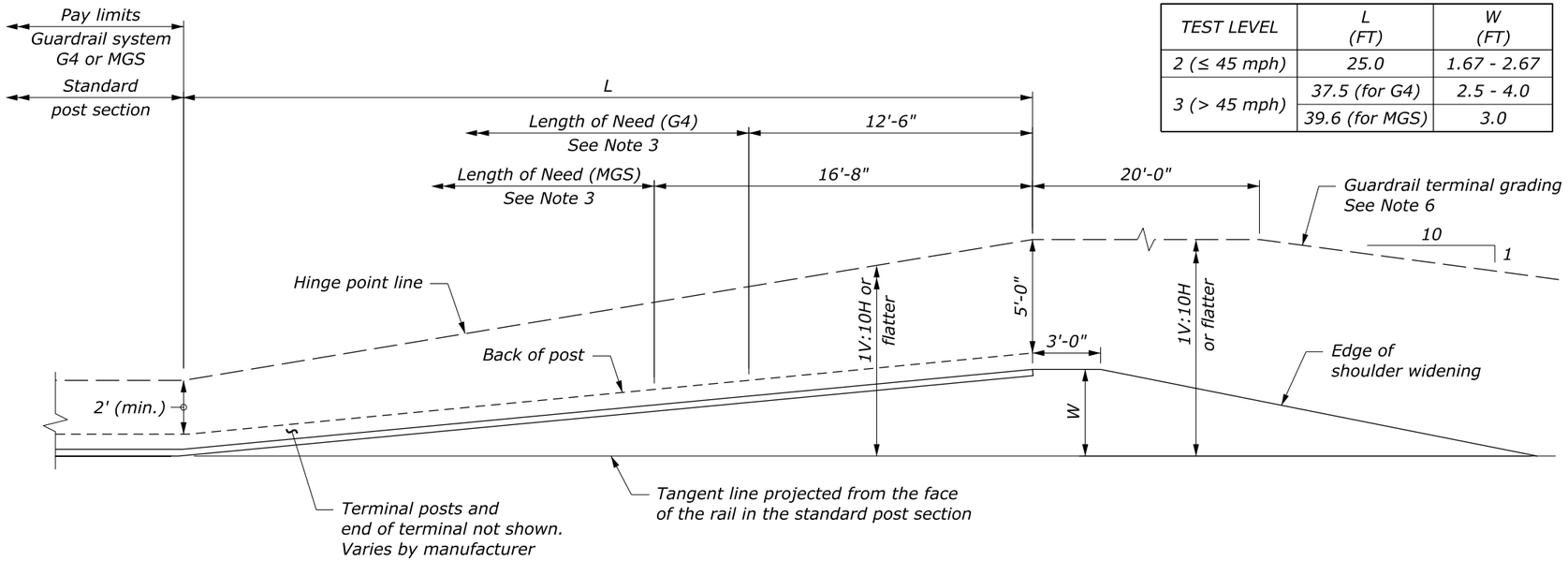


| TEST LEVEL | L (FT) | W (FT) |
|---|---|---|
| 2 (≤ 45 mph) | 25.0 | 1.67 - 2.67 |
| 3 (> 45 mph) | 37.5 (for G4) | 2.5 - 4.0 |
| | 39.6 (for MGS) | 3.0 |

PLAN

**STRAIGHT FLARED OPTION**
**MGS AND G4 W-BEAM GUARDRAIL**

## NOTE:

1. Install a flared W-beam guardrail terminal according to the manufacturer's recommendations. See manufacturer's drawings for other details.
2. Construct the terminal grading as shown in the staking notes or model. If no staking notes or model is provided, construct grading as shown on this sheet and as recommended by the manufacturer.
3. For design purposes, the length of need is assumed to begin as shown on the drawing. Verify the length of need with the manufacturer of a specific product. Adjust grading as necessary to install the flared terminal according to the manufacturer's recommendations.
4. Pave widened shoulder on both ends of guardrail runs when indicated on the plans.
5. Install a reflectorized object marker on the end of the terminal.
6. Construct a 1V:4H or flatter slope outside of the guardrail terminal grading extents where practical.

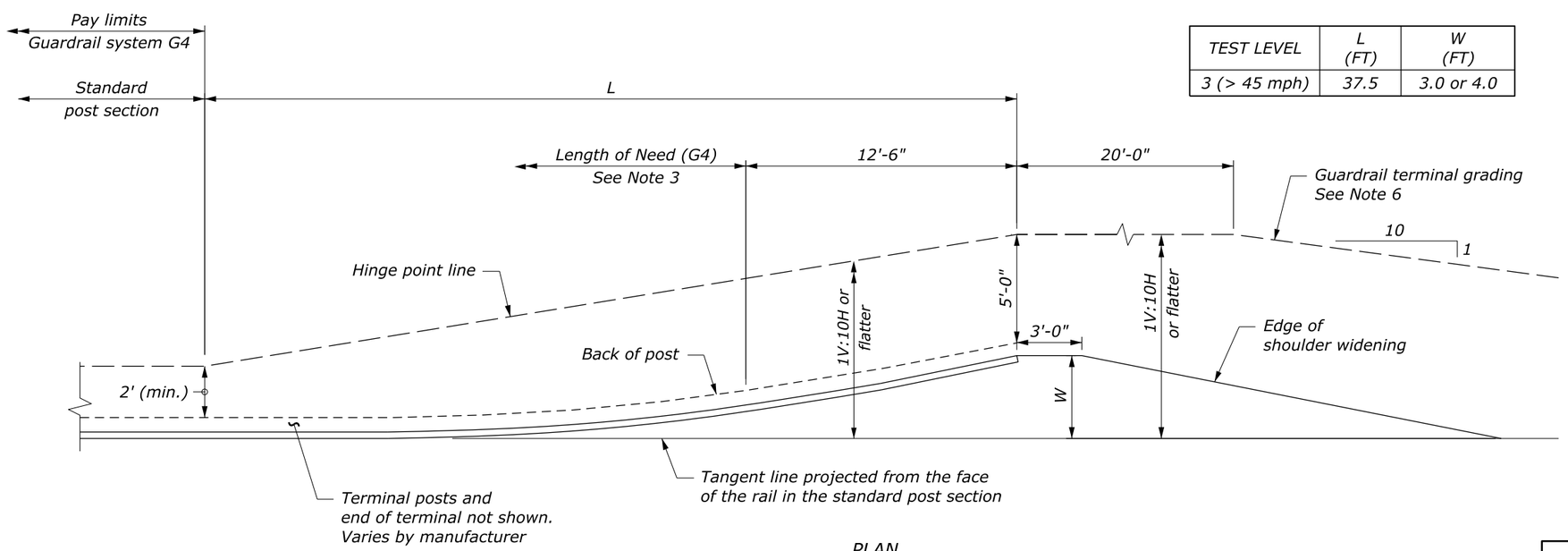


| TEST LEVEL | L (FT) | W (FT) |
|---|---|---|
| 3 (> 45 mph) | 37.5 | 3.0 or 4.0 |

PLAN

**PARABOLIC FLARED OPTION**
**G4 W-BEAM GUARDRAIL**

NO SCALE

U.S. DEPARTMENT OF TRANSPORTATION, FHWA
OFFICE OF FEDERAL LANDS HIGHWAY

**MGS AND G4 W-BEAM GUARDRAIL TYPE FLARED TERMINAL AND GRADING**

FLH STANDARD 617-19

SPECIFICATION FP-24, FP-14

APPROVED FOR USE 1/2024

c:\pw-work\d0419223\Std617-19.dgn [Std 617-19]
11 July 2024 11:52 AM

| PROJECT | SHEET NUMBER |
|---|---|
| | |

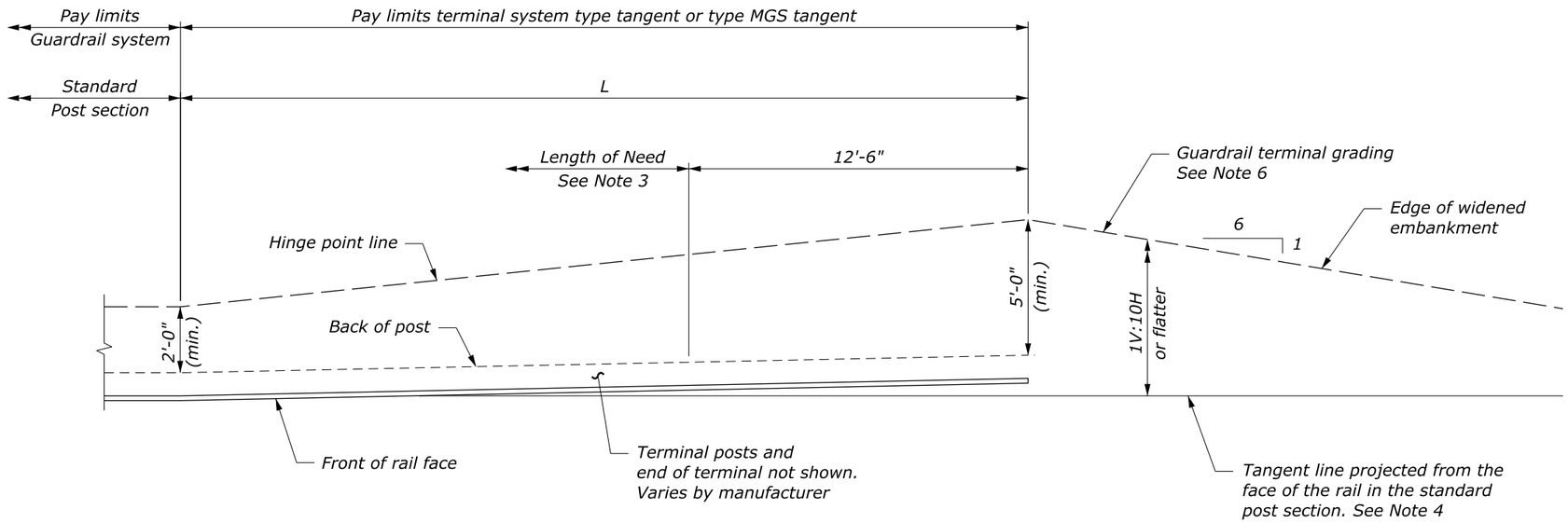


PLAN

## PREFERRED GRADING

| TEST LEVEL | L (FT) |
|---|---|
| 2 (≤ 45 mph) | 25 |
| 3 (> 45 mph) | 37.5 or 50 (for G4) |
| | 50 (for MGS) |

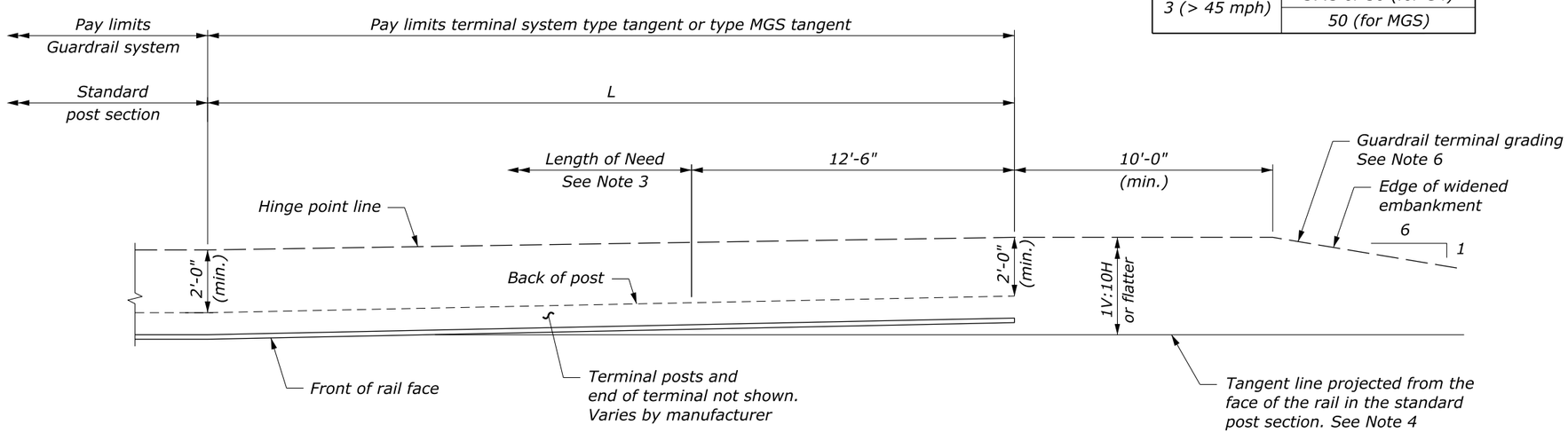


PLAN

## ALTERNATIVE GRADING

NOTE:

1. Install tangent terminal according to the manufacturer's recommendations. See manufacturer's drawings for other details.
2. Construct the terminal grading layout as shown in the staking notes or model. If no staking notes or model are provided, use the preferred grading layout as much as practical within site constraints. If necessary because of site limitations, use the alternative grading layout.
3. For design purposes, the length of need is assumed to begin at post 3. Verify the length of need with the manufacturer for a specific product. Adjust grading as necessary to install the tangent terminal according to the manufacturer's recommendations.
4. Install terminal at a 1:25 taper or flatter to position the end farther from the edge of shoulder, or use a taper according to the manufacturer's recommendations.
5. Install a reflectorized object marker on the end of the terminal.
6. Construct a 1V:4H slope outside of the guardrail terminal grading extents where practical.

NO SCALE

U.S. DEPARTMENT OF TRANSPORTATION, FHWA
OFFICE OF FEDERAL LANDS HIGHWAY

**MGS AND G4 W-BEAM GUARDRAIL TYPE TANGENT TERMINAL AND GRADING**

FLH STANDARD 617-20

SPECIFICATION FP-24

APPROVED FOR USE 1/2024

c:\pw-work\d0419223\Std617-20.dgn [Std 617-20]
11 July 2024 11:40 AM

| PROJECT | SHEET NUMBER |
|---|---|
| | |

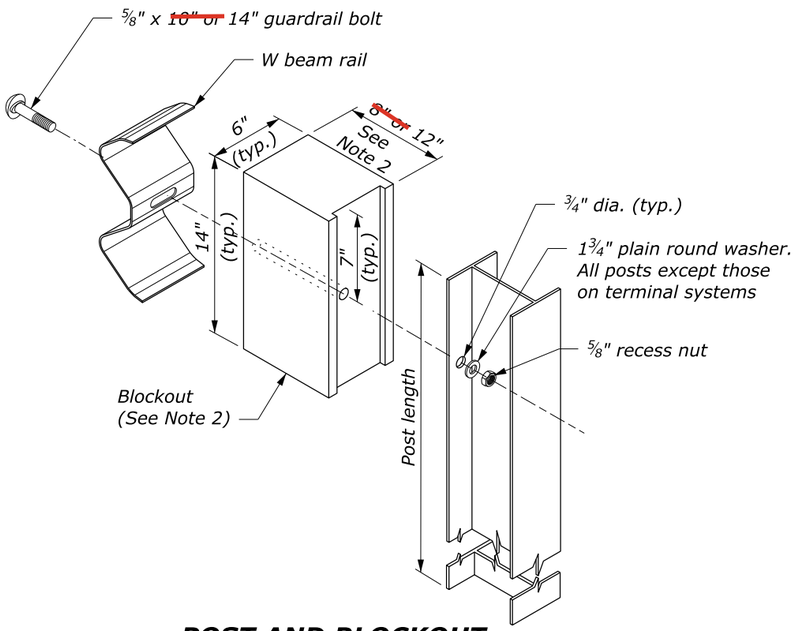


**POST AND BLOCKOUT DETAIL**

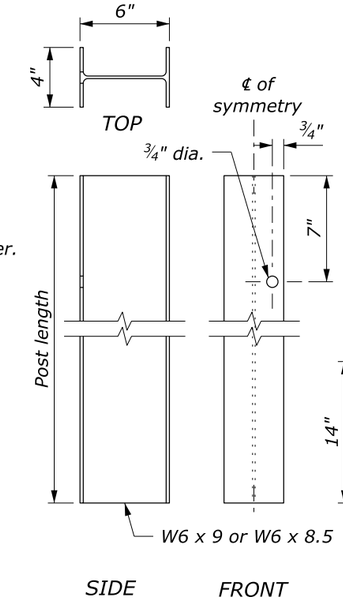


**STRUCTURAL SHAPE POST**

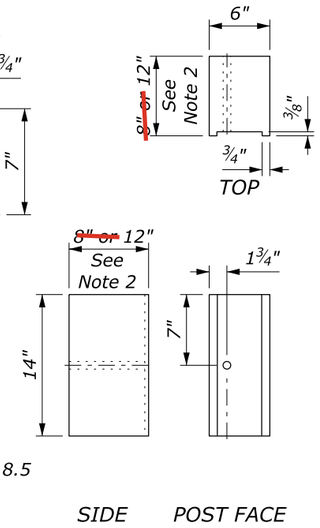


**BLOCKOUT**

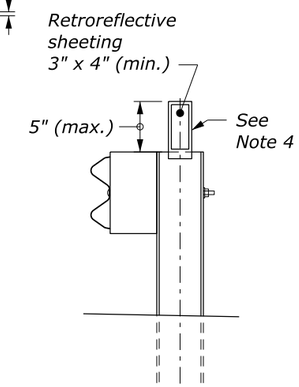


**FLEXIBLE DELINEATOR GUARDRAIL MOUNT**

## NOTE:

1. When encountering impenetrable material, one post may be omitted in locations where the typical guardrail cross section includes 2-feet (min.) between the back of the guardrail post and the hinge point. For all other locations, see Section 617 and Standard 617-13 or 617-37.
2. Size of blockout shown elsewhere in the plans. Blockout may be wood, plastic, or composite material. Use consistent material throughout the length of guardrail run.
3. Dimensional tolerances not shown or implied are intended to be those consistent with the proper functioning of the part, including its appearance, and accepted manufacturing practices.
4. Install a flexible hinged delineator every fourth post. Fasten delineator to the web of the steel post using either an adhesive or mechanical means according to the manufacturer's recommendations.

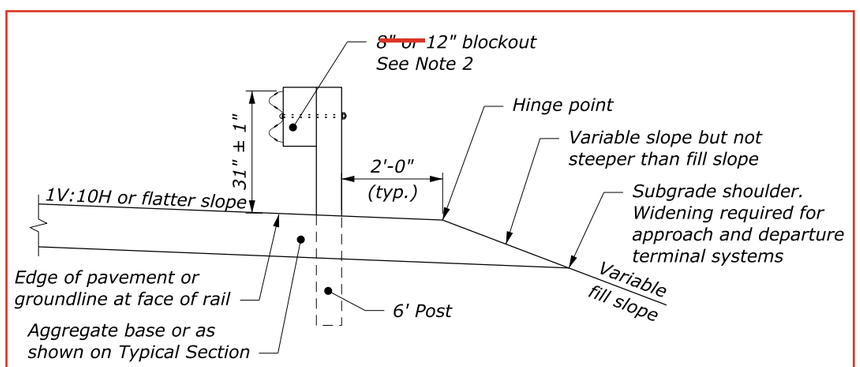


**TYPICAL GUARDRAIL CROSS SECTION 6' POST, 8" OR 12" BLOCKOUT**

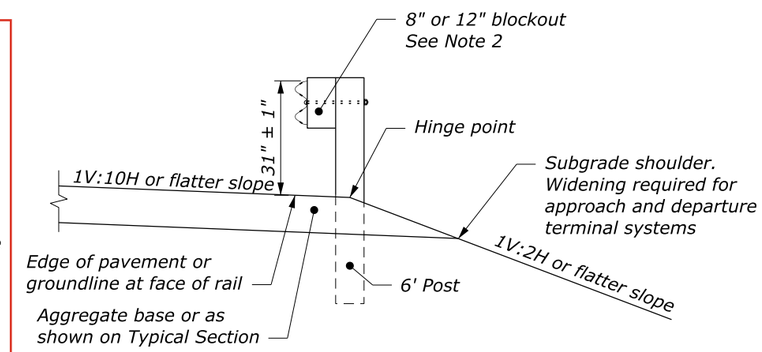


**TYPICAL GUARDRAIL CROSS SECTION 6' POST CENTERED ON HINGE, 8" OR 12" BLOCKOUT**

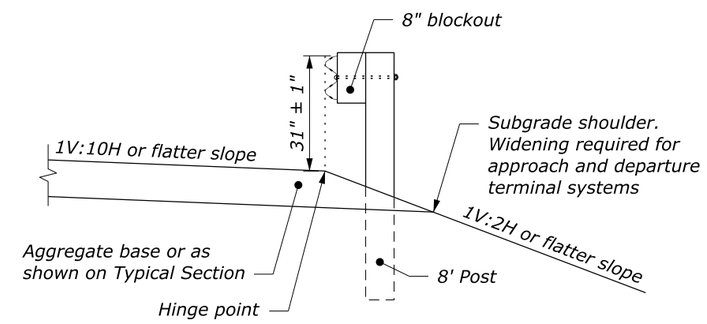


**TYPICAL GUARDRAIL CROSS SECTION 8' POST ON SLOPE, 8" BLOCKOUT**

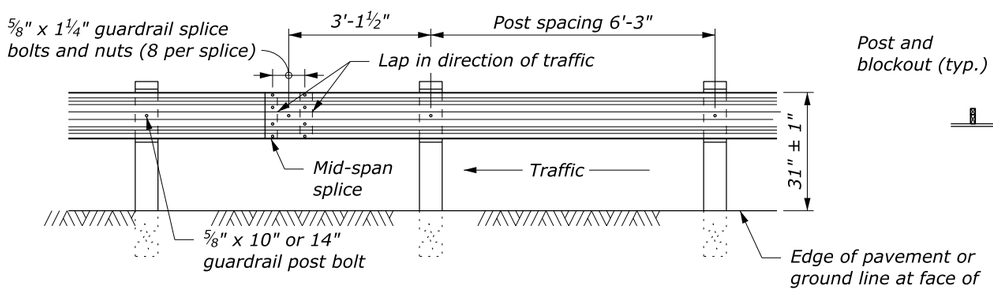


**TYPICAL GUARDRAIL ELEVATION**

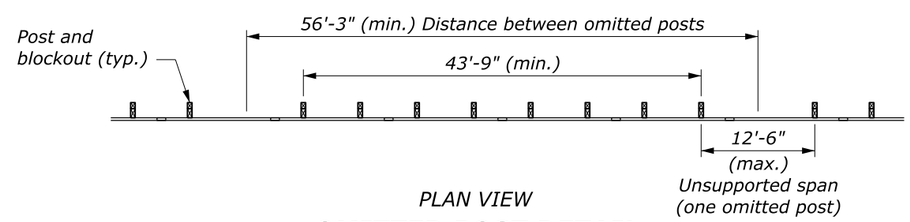


PLAN VIEW

**OMITTED POST DETAIL**

See Note 1

NO SCALE

| U.S. DEPARTMENT OF TRANSPORTATION, FHWA OFFICE OF FEDERAL LANDS HIGHWAY | FLH STANDARD 617-32 |
|---|---|
| **MGS W-BEAM GUARDRAIL STEEL POSTS** | SPECIFICATION FP-24 |
| | APPROVED FOR USE 2/2024 |

c:\pw-work\d0419223\Std617-32.dgn [Std 617-32]
10 July 2024 10:43 AM

| PROJECT | SHEET NUMBER |
|---|---|
| | |

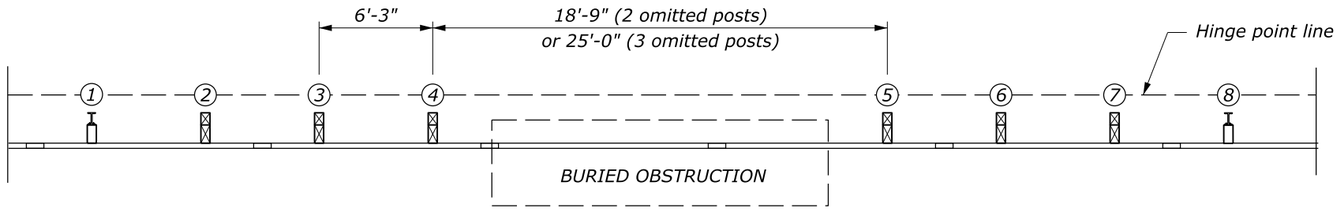


**PLAN**

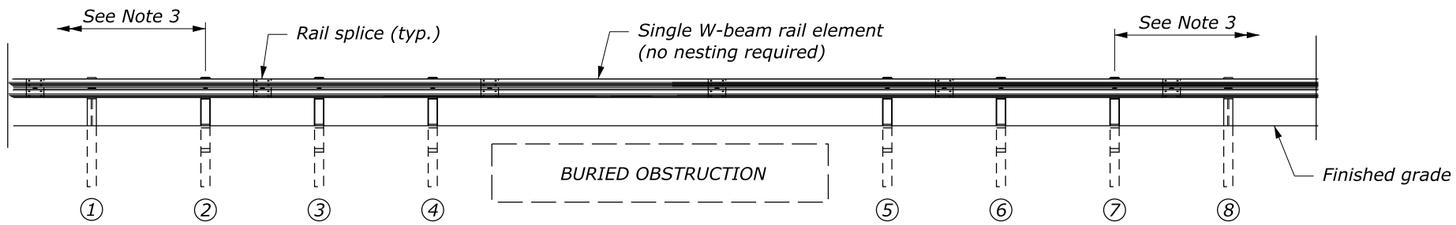


**ELEVATION**

## NOTE:

1. Posts 1 and 8 may be wood or steel.
2. Use wood posts for CRT posts.
3. The minimum length of guardrail, including the end terminals, upstream and downstream of posts 2 and 7 is 62.5 feet.
4. In locations where the culvert headwall extends above the finished grade to act as a vertical roadway curb, the maximum height of the culvert headwall above the finished grade is 2 inches.
5. See Standard 617-31 or 617-32 for other assembly details.

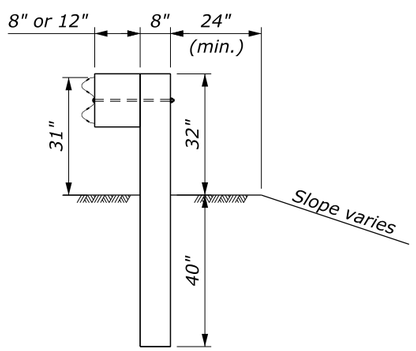


**WOOD POST DETAIL**

POST 1 AND 8
See Note 1

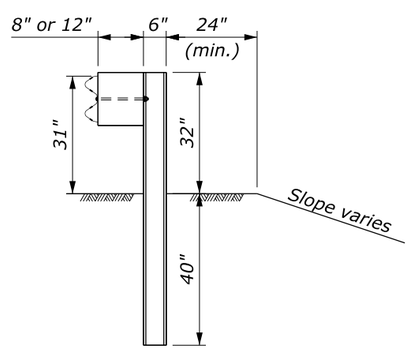


**STEEL POST DETAIL**

POST 1 AND 8
See Note 1

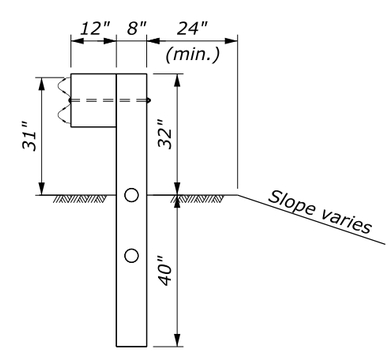


**CRT POST DETAIL**

POST 2 THRU 7
See Note 2

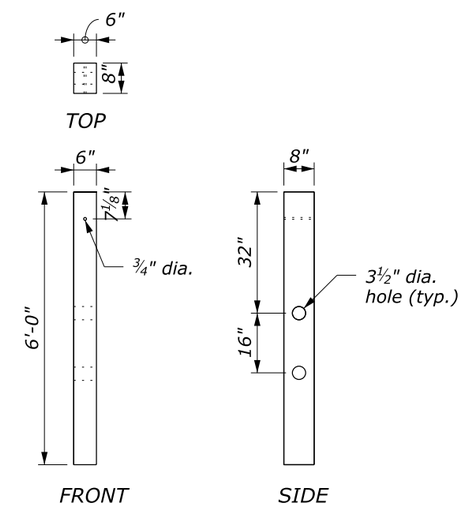


**CRT WOOD POST**

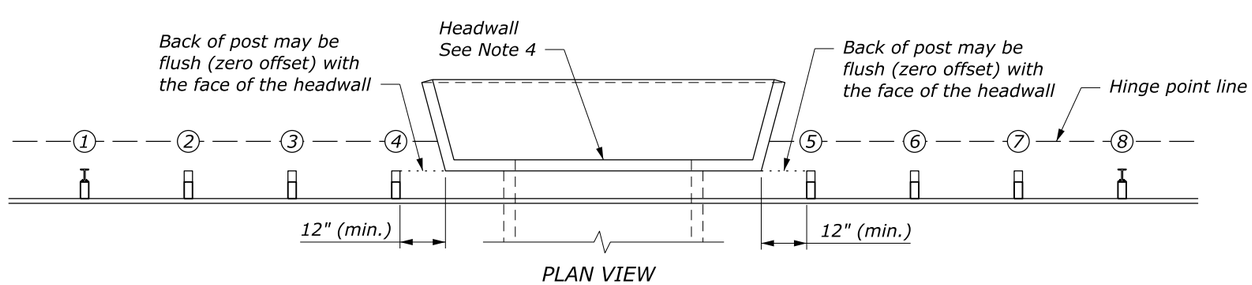


**SPAN WITH HEADWALL DETAIL**

NO SCALE

U.S. DEPARTMENT OF TRANSPORTATION, FHWA
OFFICE OF FEDERAL LANDS HIGHWAY

**MGS W-BEAM GUARDRAIL LONG-SPAN SYSTEM**

FLH STANDARD
617-37

SPECIFICATION
FP-24, FP-14

APPROVED FOR USE
1/2024

c:\pw-work\d0419223\Std617-37.dgn [Std 617-37]
9 July 2024 4:28 PM

| PROJECT | SHEET NUMBER |
|---|---|
| | |

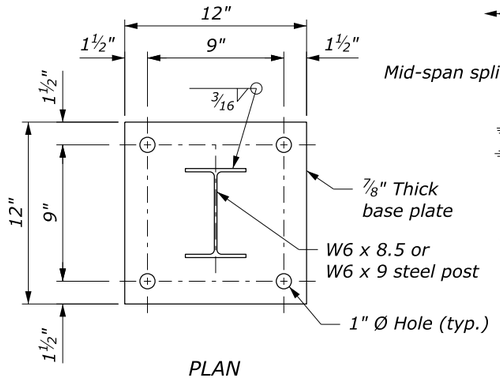


PLAN

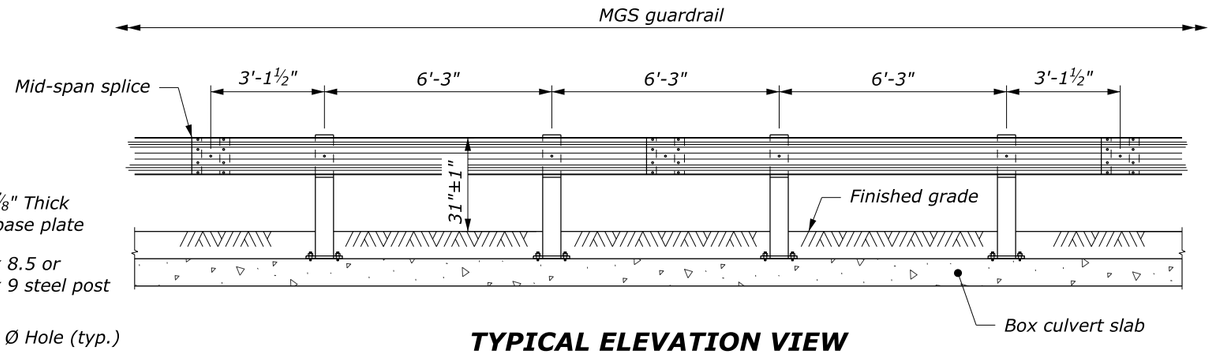


**TYPICAL ELEVATION VIEW**

## NOTE:

1. Attach guardrail post to box culvert with 7/8 inch diameter high-strength threaded rods 8½ inch in length with resin-bonded anchors. Use carbon steel rods with a minimum strength of 125 ksi and a minimum yield strength of 105 ksi. Rods, nuts, and washers have an electroplated zinc coating.
2. Wood blockouts are shown. Blockouts of an approved alternative may be used.
3. See Standard 617-32 for other details.

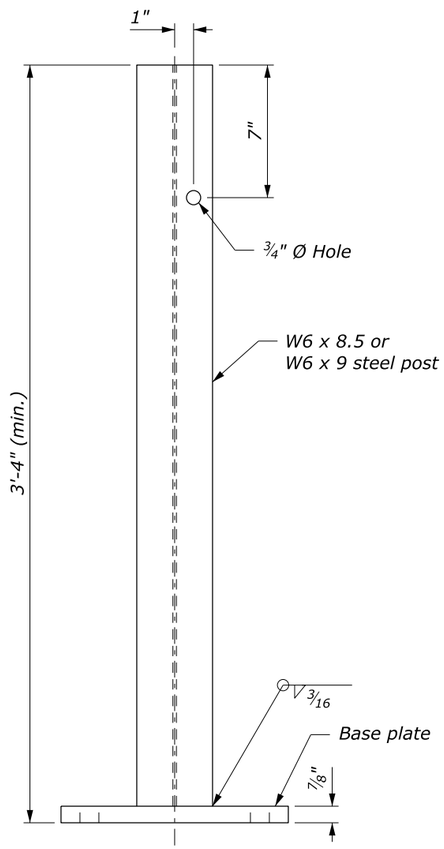


ELEVATION

**BOX CULVERT POST**

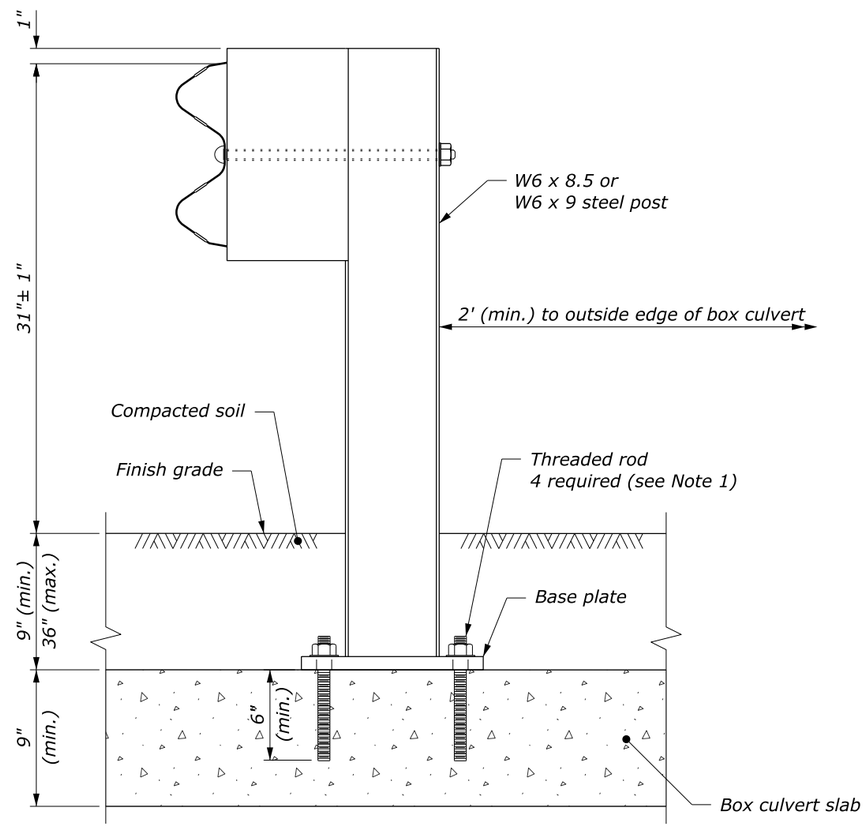


**BOX CULVERT MGS GUARDRAIL STEEL POST**

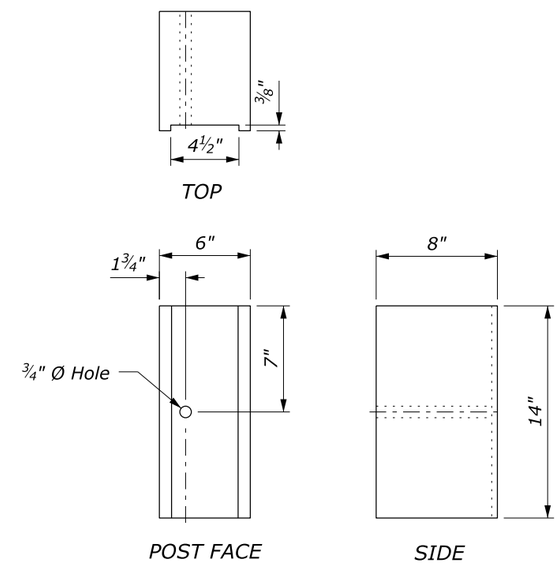


**BLOCKOUT**

See Note 2

NO SCALE

| U.S. DEPARTMENT OF TRANSPORTATION, FHWA OFFICE OF FEDERAL LANDS HIGHWAY | FLH STANDARD 617-38 |
|---|---|
| **MGS W-BEAM GUARDRAIL STEEL POSTS ATTACHED TO BOX CULVERT** | SPECIFICATION FP-24 |
| | APPROVED FOR USE 1/2024 |

c:\pw-work\d0419223\Std617-38.dgn [Std 617-38]
9 July 2024 4:16 PM