Embassy of the United States of America, Malawi

July 15, 2026

Dear Prospective Offeror:

Subject: Request for Quotes, RFQ# PR16067746

The U.S. Government intends to award a contract/purchase order to the responsible company submitting an acceptable offer at fair and reasonable price. We intend to award a contract based on initial proposals, without holding discussions, although we may hold discussions with companies in the competitive range if there is a need to do so.

Enclosed is a Request for Quotes (RFQ) for perimeter wall repairs at U.S. Government 43/270. If you would like to submit a quotation, follow the instructions in the solicitation, complete the required portions of the attached document, and submit it to the address shown on the Standard Form that follows this letter.

The proposals from General Contractors for perimeter wall repairs at U.S. Government 43/270 includes rebuilding the whole perimeter wall, including all associated demolition, construction, and restoration works.

Work shall be carried out in conformance with this Statement of Work (SOW) and Specifications, General Conditions, and the Contract Terms and Conditions. If there is a conflict between the documents, the Contractor shall follow the more stringent requirement.

The following schedule shall be implemented:

a.	Date for site visit expression of interest:	August 3, 2026
b.	Date for Site Visit:	August 6, 02026 @10:00 AM
c.	Date for questions from site visit:	August 7, 2026
d.	Date/Deadline for the submission of bids:	August 17, 2026 @0200 PM

No quotations will be accepted after this stipulated deadline. Quotations must be in English and incomplete quotations will not be accepted. If you would like to attend, you must request permission in writing by sending an email expression of interest to LilongweGSOProcurement@state.gov on or before the date stipulated above. A maximum of two attendees shall be permitted due to security control limitations.

Your quotation must be submitted electronically to LilongweGSOProcurement@state.gov is important to make sure the submission is made in specific size and format; in MS-Word 2007/2010 or MS-Excel 2007/2010 or Adobe Acrobat (pdf) file format. The file size must not exceed 30MB. Additional files should be attached to separate emails and less than 30MB each.

In order for a quotation to be considered, you must also complete and submit the following:

1. Signed SF-1442 form
2. Acknowledgement of understanding and acceptance of the Statement of Work and Specifications
3. Pricing
4. Additional information required to support Evaluation Criteria
5. Proof of SAM Registration, or if not registered in SAM, all required provisions outlined in the FAR Clauses

We welcome your interest in working with the U.S. Embassy in Lilongwe and look forward to reviewing your proposal.

Sincerely,

Adam Gaskins Digitally signed by Adam Gaskins
Date: 2026.07.29 14:07:06 +02'00'

Contracting Officer

SOLICITATION, OFFER, AND AWARD *(Construction, Alteration, or Repair)*	1. SOLICITATION NUMBER PR16067746	2. TYPE OF SOLICITATION ☐ SEALED BID (IFB) INVITATION FOR BID ☐ NEGOTIATED (RFP) REQUEST FOR PROPOSAL	3. DATE ISSUED	PAGE OF PAGES

IMPORTANT - The "offer" section on the reverse must be fully completed by offeror.

4. CONTRACT NUMBER	5. REQUISITION/PURCHASE REQUEST NUMBER	6. PROJECT NUMBER

7. ISSUED BY CODE	8. ADDRESS OFFER TO
AREA 40/PLOT 24 KENYATTA DRIVE BOX 30016 ATT GSO PROCUREMENT LILONGWE 3 MALAWI	SEE ITEM 7

9. FOR INFORMATION CALL:	a. NAME	b. TELEPHONE NUMBER *(Include area code) (NO COLLECT CALLS)*
	KOSLAT MUNTHALI	LilongweGSOProcurement@state.gov

SOLICITATION

NOTE: In sealed bid solicitations "offer" and "offeror" mean "bid and "bidder".

10. THE GOVERNMENT REQUIRES PERFORMANCE OF THE WORK DESCRIBED IN THESE DOCUMENTS *(Title, identifying number, date)*

SF 1442 COVER SHEET

A.PRICING
B.STATEMENT OF WORK
C.NSPECTION AND ACCEPTANCE
D.DELIVERIES AND PERFORMANCE
E.CONTRACT ADMINISTRATION DATA
F.SPECIAL TERMS AND CONDITIONS
G.CLAUSES
H.INSTRUCTIONS ON HOW TO SUBMIT A QUOTATION
I.EVALUATION CRITERIA

11. The contractor shall begin performance within 10 calendar days and complete it within 105 calendar days after receiving ☐ award, ☒ notice to proceed. This performance period is ☐ mandatory ☐ negotiable. ***(See _____).***

12a. THE CONTRACTOR MUST FURNISH ANY REQUIRED PERFORMANCE AND PAYMENT BONDS? *(If "YES", indicate within how many calendar days after award in Item 12b.)*	12b. CALENDAR DAYS
☒ YES ☐ NO	10

13. ADDITIONAL SOLICITATION REQUIREMENTS:

a. Sealed offers in original and SOFT copies to perform the work required are due at the place specified in Item 8 by 02:00PM ***(hour)*** local time 8/17/2026 (date). If this is a sealed bid solicitation, offers will be publicly opened at that time. Sealed envelopes containing offers shall be marked to show the offeror's name and address, the solicitation number, and the date and time offers are due.

b. An offer guarantee ☒ is, ☐ is not required.

c. All offers are subject to the (1) work requirements, and (2) other provisions and clauses incorporated in the solicitation in full text or by reference.

d. Offers providing less than 30 calendar days for Government acceptance after the date offers are due will not be considered and will be rejected.

OFFER *(Must be fully completed by offeror)*

14. NAME AND ADDRESS OF OFFEROR *(Include ZIP Code)*

CODE FACILITY CODE

15. TELEPHONE NUMBER *(Include area code)*

16. REMITTANCE ADDRESS *(Include only if different than Item 14.)*

17. The offeror agrees to perform the work required at the prices specified below in strict accordance with the terms of this solicitation, if this offer is accepted by the Government in writing within _____ calendar days after the date offers are due. *(Insert any number equal to or greater than the minimum requirement stated in Item 13d. Failure to insert any number means the offeror accepts the minimum in Item 13d.)*

AMOUNTS ▶

18. The offeror agrees to furnish any required performance and payment bonds.

19. ACKNOWLEDGMENT OF AMENDMENTS

(The offeror acknowledges receipt of amendments to the solicitation -- give number and date of each)

AMENDMENT NUMBER										
DATE										

20a. NAME AND TITLE OF PERSON AUTHORIZED TO SIGN OFFER *(Type or print)*

20b. SIGNATURE

20c. OFFER DATE

AWARD *(To be completed by Government)*

21. ITEMS ACCEPTED:

22. AMOUNT

23. ACCOUNTING AND APPROPRIATION DATA

24. SUBMIT INVOICES TO ADDRESS SHOWN IN *(4 copies unless otherwise specified)* ▶ ITEM

25. OTHER THAN FULL AND OPEN COMPETITION PURSUANT TO THE UNITED STATES CODE AT

☐ 10 U.S.C. 3204(a) ( ) ☐ 41 U.S.C. 3304(a) ( )

26. ADMINISTERED BY

27. PAYMENT WILL BE MADE BY

CONTRACTING OFFICER WILL COMPLETE ITEM 28 OR 29 AS APPLICABLE

☐ 28. NEGOTIATED AGREEMENT *(Contractor is required to sign this document and return _____ copies to issuing office.)* Contractor agrees to furnish and deliver all items or perform all work requirements identified on this form and any continuation sheets for the consideration stated in this contract. The rights and obligations of the parties to this contract shall be governed by (a) this contract award, (b) the solicitation, and (c) the clauses, representations, certifications, and specifications incorporated by reference in or attached to this contract.

☐ 29. AWARD *(Contractor is not required to sign this document.)* Your offer on this solicitation is hereby accepted as to the items listed. This award consummates the contract, which consists of (a) the Government solicitation and your offer, and (b) this contract award. No further contractual document is necessary.

30a. NAME AND TITLE OF CONTRACTOR OR PERSON AUTHORIZED TO SIGN *(Type or print)*

31a. NAME OF CONTRACTING OFFICER *(Type or print)*

Adam Gaskins Digitally signed by Adam Gaskins Date: 2026.07.29 14:06:37 +02'00'

30b. SIGNATURE

30c. DATE

31b. UNITED STATES OF AMERICA

BY

31c. DATE

TABLE OF CONTENTS

SF-1442 COVER SHEET

A. PRICING

B. STATEMENT OF WORK

C. INSPECTION AND ACCEPTANCE

D. DELIVERIES AND PERFORMANCE

E. CONTRACT ADMINISTRATION DATA

F. SPECIAL TERMS AND CONDITIONS

G. CLAUSES

H. INSTRUCTIONS ON HOW TO SUBMIT A QUOTATION

I. EVALUATION CRITERIA

J. REPRESENTATIONS, CERTIFICATIONS AND OTHER STATEMENTS

SECTION A - PRICING

1. FIRM FIXED PRICE CONTRACT

A. The Government contemplates award of a **firm fixed price** contract resulting from this solicitation.

B. No additional sums will be payable for any escalation in the cost of materials, equipment or labor, or because of the Contractor's failure to properly estimate or accurately predict the cost or difficulty of achieving the results required. The Government will not adjust the contract price due to fluctuations in currency exchange rates. The Government will only make changes in the contract price or time to complete due to changes made by the Government in the work to be performed, or by delays caused by the Government.

C. Magnitude of Construction Project: In accordance with the scale provided in FAR36.204, it is anticipated that this project is in the price range between **$50,000 and $150,000**.

D. Payments shall be made in Malawi Kwacha. See payment terms in attached Contract Clauses.

2. OFFERORS' RESPONSIBLIITIES

A. Each Offeror is responsible for:

1) Thoroughly reviewing the Statement of Work, Specifications, and Drawings and understanding their requirements.
2) Visiting the project site and becoming familiar with all working conditions, local laws and regulations; and
3) Determining that all materials, equipment and labor required for the work are available.

B. Any ambiguity in the solicitation, including specifications and contract drawings, must be reported to the Contracting Officer. Any prospective Offeror who requires a clarification, explanation or interpretation of the contract requirements must make a request to the Contracting Officer not less than ten working days before the closing date of the solicitation. Offerors may rely ONLY upon written interpretations by the Contracting Officer.

3. PRICE PROPOSAL

A. The Contractor shall complete all work required under this contract - including all labor, materials, overhead, and profit - for the following firm fixed price and within the time specified.

B. The Contractor's offer shall include the necessary materials to complete

the project, or provide a clear delineation of the materials excluded from the price which the Contractor would propose be acquired by the U.S. Government.

C. The Offeror may provide a more detailed or alternative form of a price proposal.

4. PRICE OFFERED

Division/Description	**Price**	**VAT** (if applicable)	**Total**
1. Temporary Wall			
2. 2. Demolition			
3. Construction			
4. Restoration works			
5. Allowances/ Contingency			
TOTAL:			

Offeror: _____ ***Date:*** _____

SECTION B - STATEMENT OF WORK

The U.S. Embassy Lilongwe offers the following Statement of Work and Specifications for consideration, bidding, and upon bid acceptance as a list of required activities in the performance of the Contract in conformance with the General Requirements, Attestations, and Contract Clauses.

1. INTRODUCTION

1.1 The Statement of Work includes perimeter wall reconstruction at U.S. Government property 43/270. The U.S. Embassy Facilities Section will be involved in the execution and coordination of this project with the contractor.

1.2 Pre-Bid Meeting: There will be a pre-bid meeting to verify conditions, materials, and requirements. See the solicitation cover letter for further information.

1.3 Contract Administration:

Contracting Officer (CO):
Adam Gaskins, A/General Services Officer
GaskinAJ@state.gov
Mobile: 0888-787-822

Contracting Officer Representatives (CORs):
Gregory Buie, Assistant Facility Manager
BuieGA@state.gov
Mobile: 0883-430-308

Hendrix Matewere, Residential Security Technician
MatewereH@state.gov
Mobile: 088-886-1207

Facilities Staff Government Technical Representative (FAC GTR):
Nyson Lozani, Residential Maintenance Supervisor
LozaniNM@state.gov Mobile Number: 0882-265-112

2. SUMMARY OF CONDITIONS AND WORK:

2.1 TEMPORARY WALL

2.1.1 Erect a temporary fence as per the attached drawing. The fence shall offer temporary protection to the property during construction. Do not commence any permanent work until the RSO approves the fence.

2.1.2 Use iron sheets, 0.4mm thick, for fence sheeting and bury them a minimum of 150mm deep.

2.1.3 Construct the fence to a height of at least 2500mm from the ground, measured from the attack side/neighbor's side.

2.1.4 Install vertical support posts (100/150 gum/steel poles) at a minimum depth of 700mm, space them 3000mm apart, and place them on the secure side.

2.1.5 Fix three horizontal braces (75x50mm soft wood timber) to the secure side of the temporary fence, running the entirety of its length

2.1.6 Install temporary razor wire. Reuse razor wire removed from the existing wall and secure it to the temporary wall.

2.2 DEMOLITION

2.2.1 The contractor shall provide all necessary temporary supports to ensure the stability of existing structures during demolition and construction until the new works are stable on their own.

2.2.2 Remove all demolition debris from the site. Dispose of debris at an approved location, ensuring the area is leveled and left environmentally safe.

2.2.3 Demolish the existing boundary wall, including removal of foundations and restoration of all disturbed areas to match existing finishes.

2.2.4 Carefully remove the existing razor wire for reuse on temporary fencing as specified.

2.2.5 Remove/trim all trees, shrubs, and associated stumps and roots that obstruct construction of the new boundary wall.

2.3 EVACUATION AND EARTHWORK

2.3.1 Excavate foundation trenches to a depth of up to 900mm.

2.3.2 Excavate in hard rock where encountered.

2.3.3 Backfill and compact excavated material around foundations.

2.3.4 Remove and dispose of all excess excavated material off-site.

2.4 CONCERT WORK

2.4.1 Provide 50mm thick plain concrete blinding (Grade 15–20) to all

foundation trenches on well-compacted surfaces.

2.4.2 Construct 600mm wide × 200mm thick reinforced concrete strip footing (Grade 20). The footing must be perfectly level.

2.4.3 Provide 200 × 200mm reinforced concrete columns at 3600mm centers:

- reinforced with Y12 vertical bars + R8 links @ 200mm
- to be cast monolithically or properly anchored into footing

2.4.4 Construct reinforced blockwork foundation walls tied into strip footing and columns

2.4.5 Provide a 200 × 200mm reinforced concrete beam at mid-height (~1350 mm above ground). Properly anchored into columns

2.4.7.6 Provide a continuous reinforced concrete top beam (100mm deep) at 2600mm height, fully tied into columns and blockwork

2.4.7 Supply and install precast coping with overhang and drip groove.

2.5 BLOCKWORK AND PLASTER

2.5.1 Construct 200mm thick hollow concrete block wall in 1:4 mortar.

1.1 Vertical reinforcement: Y12 bars by 1800mm centers, properly anchored into strip footing and tied into beams. All reinforced cores to be filled with concrete.

1.2 Horizontal reinforcement: Provide brick force wire at every 2 courses, continuous throughout the wall length and lapped at joints.

2.5.2 Apply 15mm thick plaster (1:4) with a wood float finish on both sides of the walls

2.5.3 Apply roughcast finish, primer and weatherproof paint. Apply two coats of silicone-based primer and finish with weatherproof paint on both faces of the walls, including copings.

2.5.4 Apply one coat of 13mm cement and sand roughcast (1:4 mix) to all plastered walls and columns above finished ground level. Apply two coats of silicone-based primer and finish with weatherproof paint on both faces of the walls, including copings.

2.5.5 Apply a bituminous coating/fabric to both sides of the foundation wall.

2.5.6 All blockwork shall be laid in 1:4 cement sand mortar with 10mm thick bed, fully filled

2.6 RAZOR WIRE

2.6.1 Supply and install 350mm diameter coiled galvanized razor wire (8m stretch, 5.5kg mass) along the full length of the perimeter wall, including the top of the gate.

2.6.2 Install three overlapping rolls of flat razor wire on the gate.
2.6.3 Fix razor wire on top of the perimeter wall or at an inward-facing angle not exceeding 30 degrees along the entire perimeter.
2.6.4 Ensure a minimum of 12 coils per meter of razor wire. Use 12mm diameter steel bars as holding spikes at intervals not exceeding 1000mm.
2.6.5 Install two parallel tying wires to securely support and stabilize the razor wire.

2.7. DRAINAGE WORKS

2.7.1 Conduct a survey to establish existing drainage flow/levels.

2.7.2 Construct brick-lined or concrete drains (450 x 275mm) along the perimeter wall, to collect and channel surface runoff.
Increase depth to 300mm at low points and critical sections.
2.7.3 Excavate and prepare drain base to required gradient. Provide 50mm thick concrete blinding.
2.7.4 Lay bricks to a proper gradient, bedded in 10mm thick cement–sand mortar (1:3 mix). Finish the internal surfaces smooth to promote Flow
2.7.5 Construct stormwater collection boxes/catch pits (approx. 500 × 300mm internal dimensions) at direction changes.
2.7.6 Supply and install 200mm (8") uPVC pipes where required to run underground. Lay pipes a compacted bed.
2.7.7 Connect the internal drainage system to external discharge points.

2.8 GATE

Sliding Vehicle Gate Specifications

2.8.1 All materials steel should meet ASTM standards for all gate pipes.
2.8.2 The height should not be less than 2.75-m. This should include 2.3-m of solid gate and 0.45-m of concertina wire above the gate well secured with Y-posts.
2.8.3 A 3-mm sheet on the attack side should be used.

2.8.4 Provide peep hole. Measurements, expanded metal, hinged cover plate
2.8.5 Construct a pillar to the receiving end. This will allow proper alignment of the gate during installation as per the location.
2.8.6 Install heavy-duty operator and receiving end-posts and add a latch (The steel posts should be embedded in concrete columns/pillars on both

ends) Size?

2.8.7 Install heavy-duty ground rail should be installed (to carry the weight of the gate).

2.8.8 Provide FOUR heavy-duty 100-mm V-groove wheels.

2.8.9 Provide a safety stop bar that prevents gate runouts and guide-wheel brackets.

2.8.10 Paint the gate with primer (red oxide?) and high gloss paint, color selected by RSC.

2.8.11 Install Pedestrian Door dimensions: H 2m by W 800mm

MEASUREMENTS

2.8.12 The gate dimensions should be 3.50-m x 2.75-m (to be verified by contractor on site.)

2.8.13 Bracings and cross bracings should be of 40-mm x 40-mm square tubes spaced at 150-mm on center.

2.814 The Peep hole should be located at least 1.2-m min from the ground.

2.9 GUARD HOUSE

2.9.1 Replace damaged roof structure (sheets and timber members)

2.9.2 Remove the rear door and infill the opening.

2.9.3 Make a new door opening on the western side, including lintel Installation. Supply and fix a new hardwood door.

2.9.4 Supply and install double power socket outlets inside the room. Include all necessary wiring, conduits.

2.9.5 Construct drain along the guard house to take roof and surface runoff away from the structure. Connect the drain to the site drainage system.

2.10 SCREEN WALLS

22..10.1Retain the existing screen wall near the gate.

3.1.2 Rebuild any sections damaged during demolitions

2.11 ELECTRICA

2.11.1 Install two security lights at the gate. Supply complete installation; wiring, conduits and fittings.

3. SITE CLEAN-UP AND RESTORATION, AND SAFETY

3.1 SITE CLEAN-UP AND RESTORATION

3.1.2 Rake clean, level, and repair all landscaped grounds and areas disturbed by wall fence construction to the satisfaction of the client.

3.1.3 Restore lawns by applying a 50mm layer of black soil and replanting.

3.1.4 Clean, prime, and repaint all painted surfaces impacted by construction to match existing finishes.

3.1.5 Clean all driveways, buildings, and other site improvements to the satisfaction of the client.

3.1.6 Repair any water reticulation lines, electrical cables, or other utilities impacted by the construction of the wall.

3.2 SAFETY

3.2.1 Develop and implement hazard control measures in accordance with EM 385-1-1. Submit a site-specific safety plan for review and approval by the Post Occupational Safety and Health Officer (POSHO) prior to commencing work.

3.2.2 Prepare Activity Hazard Analyses (AHAs) for all relevant activities and incorporate them into the safety plan.

4. GENERAL SPECIFICATIONS

4.1 EARTHWORKS

4.1.1 Use selected excavated materials for backfill, with at least 95% passing a 37.5mm sieve and no more than 8% passing a 0.75mm sieve.

4.1.2 Place backfill in loose lifts not exceeding 200mm. Water and compact each lift to achieve a dry density of at least 95% of the standard Proctor Maximum Dry Density. Test compaction using the Modified Proctor Method, handheld moisture density meter, or in situ nuclear moisture density gauge.

4.1.3 Submit compaction test results to the Contracting Officer's Representative (COR), indicating the location and elevation of each tested area. Any area failing to meet requirements must be reworked and retested with suitable materials to the satisfaction of the COR. Conduct tests at every third lift and at 30m intervals. The contractor is responsible for all testing, which must be witnessed by the COR or their representative.

4.1.4 Compact backfill mechanically using suitable equipment. Use vibro rammers in confined or narrow areas.

4.1.5 Do not backfill against new concrete footings until the concrete has reached at least 70% of its ultimate strength, typically after 7 days.

4.2 PLASTER WORKS

4.2.1 **Materials:** Cement: Use Ordinary or Rapid Hardening Cement.
Sand: Use sand free from vegetation or organic matter.

4.2.2. **Curing**: Continuously water all newly plastered surfaces for a minimum of three (3) days after application

4.3 CONCRETE WORKS

The contractor is responsible for providing suitable materials, determining mix proportions, and producing concrete of the required quality. Specifications for materials do not limit the contractor's responsibility to meet all requirements.

4.3.1 Materials

4.3.1.1 Cement: Use Ordinary or Rapid Hardening Cement. All cement must be delivered in sealed packages from the manufacturer.

4.3.1.2 Aggregate: All fine and coarse aggregates must comply with BS882 or other approved British Standards. Store each size and type of aggregate separately to prevent contamination and segregation.

4.3.1.3 All concrete must meet or exceed the specified strength and durability requirements. Unless otherwise stated, concrete shall have the following minimum characteristic compressive strengths at 28 days: Blinding concrete: 15 MPa (minimum); Strip footings: 20 MPa (minimum); Columns and beams: 25 MPa (minimum).

4.3.2 Mixing

4.3.2.1 Mix concrete in a mechanical batch mixer approved for uniform distribution and capable of accurate proportioning and controlled mixing time. Hand mixing is not permitted.

4.3.2.2 Ready-mix concrete and concrete pumping methods are encouraged where feasible.

4.3.3 Placing

4.3.3.1 Place concrete only between pre-arranged stop ends and

construction joints. Do not begin placement until the COR has inspected the steel reinforcement and the area to be poured.

4.3.3.2 Use mechanical vibrators to achieve dense, homogeneous, dense concrete free of voids and air pockets.

4.3.4 Testing

4.3.4.1 Determine concrete strength using standard test cubes prepared in accordance with BS 8110 or BS 1881.

4.3.4.2 Take samples for each delivered batch or every 20m³ for site-mixed concrete. Prepare six cubes per sample: three for 7-day testing and three for 28-day testing. The Contractor shall be responsible for all sampling and testing.

4.3.5 Curing

4.3.5.1 Protect freshly placed concrete from sun and wind by keeping surfaces continuously moist using wet coverings or water spray.

4.3.5.2 Do not commence blockwork for at least four (4) days after concrete placement.

4.3.6 Reinforcement

4.3.6.1 Clean all reinforcement prior to installation. Steel shall be free from loose mill scale, rust, oil, grease, or other contaminants.

4.3.7 Bending of Reinforcement

4.3.7.1 All reinforcement shall be bent in accordance with BS 1478, unless otherwise specified. Reinforcement must be bent accurately to the shapes shown in the drawings. Hooks and bends shall be formed gradually and evenly. Any reinforcement showing cracks or brittleness shall be rejected.

4.3.8 Placing of Reinforcement

4.3.7.1 Fix reinforcement accurately in the positions shown on the drawings. Concrete cover shall not deviate by more than ±6mm.

4.3.7.2 Secure reinforcement using approved spacers, chairs, or concrete blocks to prevent movement during concrete placement. All supports shall be approved by the COR and included in the Contractor's rates.

4.3.7.3 Tie all bar intersections using annealed 16 B.S.W. gauge steel wire or galvanized binding wire. Welding or alternative fixing methods shall

4.3.7.4 not be used without prior written approval from the COR.

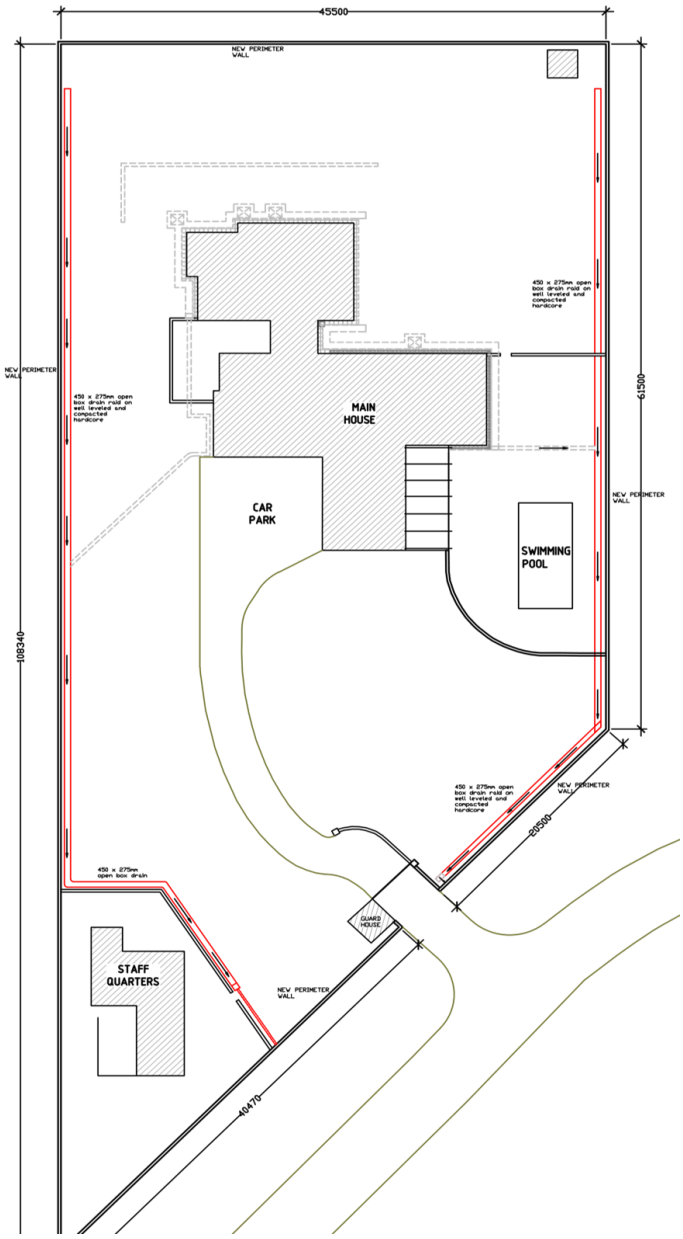
45500
NEW PERIMETER WALL
450 x 275mm open box drain raid on well levelled and compacted hardcore
NEW PERIMETER WALL
450 x 275mm open box drain raid on well levelled and compacted hardcore
MAIN HOUSE
CAR PARK
SWIMMING POOL
61500
NEW PERIMETER WALL
108340
450 x 275mm open box drain raid on well levelled and compacted hardcore
NEW PERIMETER WALL
25500
450 x 275mm open box drain
GUARD HOUSE
STAFF QUARTERS
NEW PERIMETER WALL
40470

Columns & Footing:

- Provide Y12 reinforcement bars, continuous from footing to top beam.
- All column bars shall be properly anchored into the footing.
- Provide Y12 starter bars cast into the footing.
- Connect columns to walls using 6mm galvanized metal ties at 600mm centers.

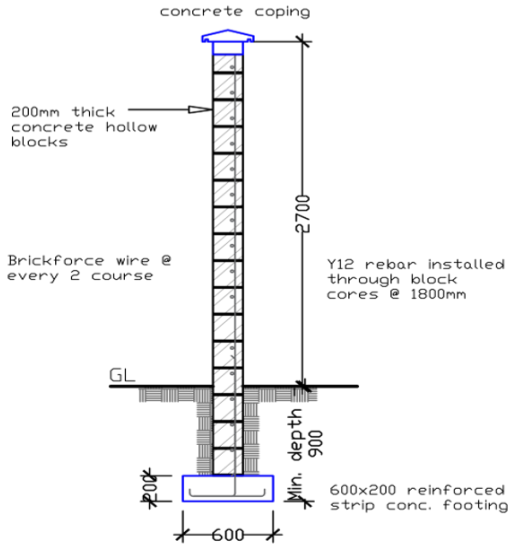

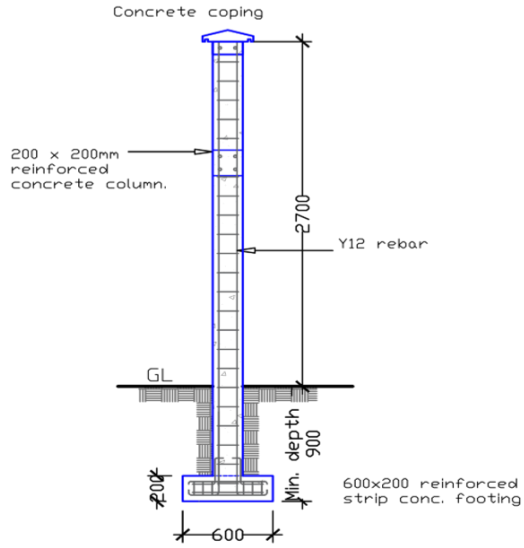

PERIMETER WALL SECTION

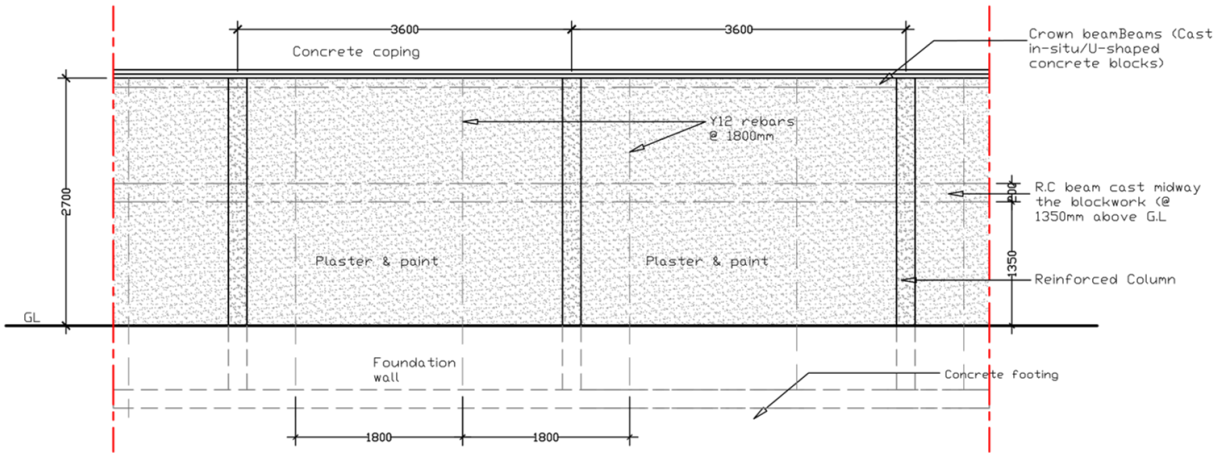

PERIMETER WALL - PART ELEVATION

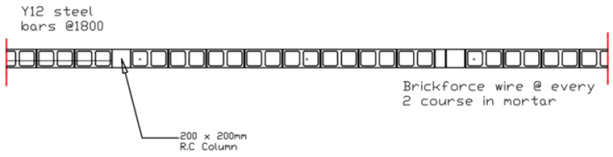

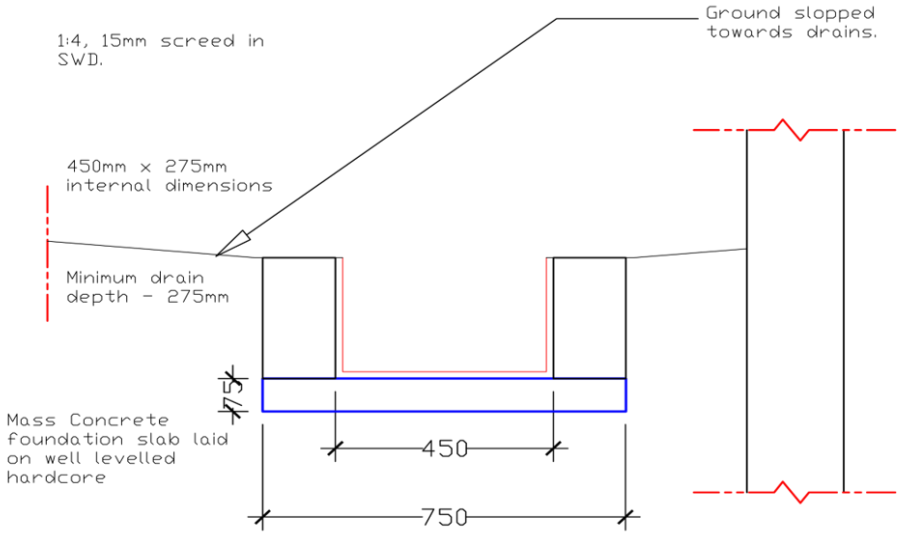

Open Box drain

SECTION C - INSPECTION AND ACCEPTANCE

1. SUPERVISION, QUALITY ASSURANCE, AND INSPECTION

A. SUPERINTENDENCE BY THE CONTRACTOR: At all times during performance of this contract and until the work is completed and accepted, the Contractor shall directly superintend the work or assign and have on the worksite a competent superintendent who is satisfactory to the Contracting Officer and has authority to act for the Contractor. (FAR 52.236-6)

B. The Contractor shall maintain satisfactory standards of employee competency, conduct cleanliness, appearance and integrity and shall be responsible for taking such disciplinary action with respect to employees as may be necessary.

C. The Contractor shall be qualified or approved by the manufacturer to perform the work for the specified guarantee period. The Contractor shall be responsible for any Manufacturer's Warranty and Inspection.

D. The Contractor shall institute an appropriate inspection system set forth in a Quality Assurance Plan. The plan shall include checklists of duties to be carried out, ensuring these duties are carried out by the supervisory staff and senior employees, and carrying out weekly inspections to determine whether the various services are being performed according to the contract. The Contractor shall provide copies of the weekly inspection reports to the COR.

E. The COR, GTR, or their authorized representatives, may inspect any or all work at all times and places during the Contract, to the extent practicable.

F. The COR, GTR, or their authorized representatives will inspect from time to time the services being performed and the supplies furnished to determine whether work is being performed in a satisfactory manner, and that all supplies are of acceptable quality and standards.

G. These inspections shall follow a Quality Control Check List to:
    1) Verify the construction safety guidelines are followed by the contractor.

2) Verify the safe work procures are in use to prevent injury during construction.
3) Verify the contractor's timetable corresponds with the contract provisions.
4) Verify the contractor is functioning according to the Statement of work.
5) Document all deficiencies in writing
6) Ensure contractors correct deficiencies properly at no cost to the government

H. The Contractor shall be responsible for any countermeasures or corrective action, within the scope of this contract, which may be required by the COR as a result of such inspection. The Contractor shall correct and improve promptly any shortcomings and substandard conditions noted during inspections. The Contractor shall bring any conditions beyond the responsibility of the Contractor to the attention of the Contracting Officer or COR.

2. MATERIALS AND WORKMANSHIP

A. All equipment, material, and articles incorporated into the work covered by this contract shall be new and of the most suitable grade for the purpose intended, unless otherwise specifically provided in this contract. No used materials shall be installed or allowed. If a new material is damaged during the installation, the contractor shall replace the item at his/her own expense. The contracting officer or his representative shall approve all materials used before commencement of work.

B. All work under this contract shall be performed in a skillful and workmanlike manner. The COR may require, in writing, that the Contractor remove from the work any employee the Contracting Officer deems incompetent, careless, or otherwise objectionable.

C. GOVERNMENT FURNISHED PROPERTY: The U.S. government is not providing any materials or equipment to the Contractor.

3. STORAGE OF MATERIALS

A. Proper storage of materials is the sole responsibility of Contractor. Stored materials shall be available for inspection.

B. The Contractor must protect all materials susceptible to damage by weather, including but not limited to all roll goods, insulation, cant strip, wood, and plywood in dry, above ground, watertight storage. Keep all labels intact and legible, clearly showing the product, manufacturer, and other pertinent information.

C. Temporary buildings (e.g., storage sheds, shops, offices) and utilities may be erected by the Contractor with the approval of the Contracting Officer and shall be built with labor and materials furnished by the Contractor without expense to the Government. The temporary buildings and utilities shall remain the property of the Contractor and shall be removed by the Contractor at its expense upon completion of the work. With the written consent of the Contracting Officer, the buildings and utilities may be abandoned and need not be removed.

D. Store flammable and volatile liquids in sealed containers located a minimum of 20 feet from existing buildings.

E. Liquid products shall be delivered sealed, in original containers. Store roll goods in an upright position.

F. The Contractor shall confine all operations (including storage of materials) on Government premises to areas authorized or approved by the COR. The Contractor shall hold and save the Government, its officers and agents, free and harmless from liability of any nature occasioned by the Contractor's performance.

G. The Contractor shall, under direction prescribed by the COR, use only established roadways, or use temporary roadways constructed by the Contractor when and as authorized by the COR. When materials are transported in prosecuting the work, vehicles shall not be loaded beyond the loading capacity recommended by the manufacturer of the vehicle or prescribed by any applicable law or regulation. When it is necessary to cross curbs or sidewalks, the Contractor shall protect them from damage. The Contractor shall repair or pay for the repair of any damaged curbs, sidewalks, or roads.

4. CLEANUP

A. The contractor shall maintain a clean work area.

B. At the end of each working day, the contractor shall clean the area of work and remove all tools and trash from the work area. The Contractor's Site Superintendent and U.S. Embassy Staff Representative shall designate sweeping/cleaning requirements daily.

C. The contractor shall use turpentine, thinners or similar harmful chemicals on site only to the extent necessary and appropriate for immediate cleaning of tools that would otherwise be damaged if not cleaned, such as paint brushes. All such harmful chemicals shall be removed from the site for proper disposal. All such harmful chemicals shall be handled in a manner to prevent risks to health and safety and to property consistent with sections 13 and 17 below.

D. Items for installation, debris, and excavation material shall not be left in an area where it may become a tripping hazard. The Contractor shall at all times keep the work area, including storage areas, free from accumulations of waste materials.

E. Before completing the work, the Contractor shall remove from the work and premises any rubbish, tools, scaffolding, equipment, and materials that are not the property of the Government.

F. Upon completing the work, and prior to submittal of the final invoice, the Contractor shall leave the work area in a clean, neat, and orderly condition satisfactory to the Contracting Officer.

5. PROTECTION OF EXISTING VEGETATION, STRUCTURES, EQUIPMENT, UTILITIES, AND IMPROVEMENTS

A. The Contractor shall preserve and protect all structures, equipment, and vegetation (such as trees, shrubs, and grass) on or adjacent to the work site, which are not to be removed, and which do not unreasonably interfere with the work required under this contract. The Contractor shall only remove trees when specifically authorized to do so and shall avoid damaging vegetation that will remain in place. If any limbs or branches of trees are broken during contract performance, or by the careless

operation of equipment, or by workmen, the Contractor shall trim those limbs or branches with a clean cut and paint the cut with a tree-pruning compound as directed by the COR.

B. The Contractor shall protect from damage all existing improvements and utilities (1) at or near the work site, and (2) on adjacent property of a third party, the locations of which are made known to or should be known by the Contractor. The Contractor shall repair any damage to those facilities, including those that are the property of a third party, resulting from failure to comply with the requirements of this contract or failure to exercise reasonable care in performing the work. If the Contractor fails or refuses to repair the damage promptly, the Contracting Officer may have the necessary work performed and charge the cost to the Contractor.

6. AVAILABILITY AND USE OF UTILITY SERVICES:

The Government shall make all reasonably required amounts of electricity and water available to the Contractor from existing outlets and supplies. The Contractor shall carefully conserve any such utilities furnished without charge. Inappropriate use of such utilities shall be cause for damages against the Contractor.

7. TOILET FACILITIES AND COOKING

A. TOILETS: The contractor's employees shall have the use of staff quarters toilets and shall be escorted by U.S. Embassy Staff. All other toilet facilities are off limits to contractor employees unless coordinated prior to the commencement of work.

B. COOKING: The contractor's employees shall not cook in or around the property site. No open fires nor pre-approved hotplates are allowed. No open fires shall be allowed outside, in front, or adjacent to the property site. The contractor shall provide box lunches for his/her employees.

8. SHIPMENT AND CUSTOMS CLEARANCE OF IMPORTED MATERIALS

A. Costs to be borne by Contractor: The Contractor is responsible for paying all charges incurred in obtaining materials that must be imported for the

project and in transporting the materials from their place or origin to the construction site. Moving costs shall include, but not necessarily be limited to, packing, handling, cartage, overland freight, ocean freight, transshipment, port, unloading, customs clearance and duties (other than customs duties specified below), unpacking, storage, and all other charges including administrative costs in connection with obtaining and transporting the materials from their source to the project site.

B. Customs Clearance: The Government will be responsible for obtaining customs clearances, and for obtaining exemption certificates or paying customs duties not waived, for imported products, materials and equipment which are labeled and processed in accordance with the Contracting Officer's instructions. The Government shall not be responsible for obtaining customs clearance for the Contractor's tools, construction equipment or machinery, nor for obtaining visas, entry or work permits for the Contractor's personnel.

C. Duty-free clearance: The Contractor shall not be responsible for customs duties for which the Government has been able to obtain a customs waiver. The Contractor shall follow the instructions of the Contracting Officer as to the manner of labeling the shipping containers or otherwise processing shipments of imported materials in order to obtain, or continue to receive, duty free clearance through customs. The Contractor shall be responsible for the payment of customs duties, if any, which:
    1) are imposed on items which are not labeled and processed in accordance with the Contracting Officer's instructions,
    2) are imposed on the Contractor's tools, construction equipment and machinery imported for use on the project, or
    3) are otherwise ineligible for duty-free entry. The Contractor is responsible for customs duties where the Contractor has failed to give adequate and timely notice to the Contracting Officer of importation on containers or materials which may be eligible for a customs waiver. The Contracting Officer will provide instructions concerning time periods for notification of importation by the Contractor.

9. HEALTH AND SAFETY

A. The Contractor is responsible for and shall continue management and implementation of a safety and health program throughout construction

to protect the health and safety of the Contractor's employees, U.S. Government personnel, any visitors to the site, and the general public.

B. Before commencing the work, the Contractor shall:
   1) Submit a written proposed plan for implementing this clause. The plan shall include an analysis of the significant hazards to life, limb, and property inherent in contract work performance and a plan for controlling these hazards; and
   2) Meet with representatives of the Contracting Officer to discuss and develop a mutual understanding relative to administration of the overall safety program.

C. The Contracting Officer and the Post Occupational Safety and Health Officer [POSHO] reserve the right to suspend work when and where Contractor's safety and health program is considered to be operating in an inadequate or non-complying manner.

D. The Contractor's site safety plan shall include the following:
   1) Statement of safety and health policy.
   2) Administrative responsibilities for implementing the plan.
   3) Identification of personnel responsible for accident prevention.
   4) Plans for regular safety briefings, hazard communication, and continued safety and health training.
   5) Provisions for inspections of work sites, materials, and equipment.
   6) Emergency response capabilities to minimize consequences of accidents.
   7) Public safety requirements.

E. The Contractor shall appoint a Safety and Health Program Manager who is responsible for implementing the safety plan.
   1) The Safety and Health Program Manager shall be qualified to anticipate, identify, evaluate, and implement corrective action in relation to potential safety and health hazards and dangerous exposures for accident prevention.
   2) The Safety and Health Program Manager shall conduct inspections as necessary to assess site conditions and conformance with safety practices, and to confirm that safe operating procedures for equipment machinery are consistently implemented. Relevant standards are U.S. Occupational safety and Health Administration, U.S. Army Corps of Engineers, and Malawi safety standards.

3) The Safety and Health Program Manager shall be available to meet with the COR and POSHO as needed to discuss site specific safety and health issues.

F. SAFETY OF PERSONNEL:

1) All employees of the Contractor shall wear the appropriate protective equipment to include hearing, eye, and shoe or work boot protection while at the job site.
2) The Contractor shall prohibit/prevent the presence or use of alcohol or drugs by its employees, permitted subcontractors or suppliers at a job location or performance by any such person under the influence of alcohol or drugs.

G. TOOLS, EQUIPMENT, AND MACHINERY:

1) Quality: Hand tools, power tools, equipment, machinery, materials, and personal protective apparatus shall be of manufacture listed by U.S. or internationally recognized testing laboratory for specific application for which they are to be used. They shall be quality products recognized for professional construction use, applications, and work practices.
2) Scaffolding: Shall be a standard tubular frame and clamp system manufactured and tested according to international standards. The Scaffold system shall include the scaffold manufacturers integrated access stairway sections, handrails, toe boards and walking platforms.
3) Safe Clearance Procedure: Prior to initial use, and periodically thereafter at times of continued use, provide inspections of construction tools, equipment, and machinery. Do not permit continued use of tools, equipment, and machinery that are not in good condition.
4) Fall Protection: On unprotected sides of the building edge provide workers with warning lines, guardrail, safety net or personal fall arrest systems or a combination of safety monitoring systems.
5) Hazardous work shall be brought to the attention of the QAI and POSHO prior to commencing the work.
    - Hot Work: Includes all work that results in open flame such as welding, cutting, brazing, and burning. The Contractor shall provide effective fire protection and prevention at all times during such operations.
    - Confined Space: Work in enclosed areas such as sewers,

vaults, vessels, manholes, pits, etc.

- Internal Combustion: The use of cranes, forklifts, hoists, or generators powered by petroleum fuel when used on or near the building.
- Explosive Actuated Tools: These include powder charged tools used for fastening purposes.

10. PROJECT CLOSEOUT

A. SUBSTANTIAL COMPLETION

1) Contractor shall submit written request to the COR stating the proposed date of Substantial Completion and schedule Final Inspection.
2) Written certification shall include:
    a) Contract Documents have been reviewed.
    b) Project has been inspected for compliance with Contract Documents.
    c) Work has been completed in accordance with Contract Documents.
    d) Equipment and systems have been tested in presence of Owner's Representative and are operational.
    e) Project is complete and ready for final inspection.
3) Quality Assurance Inspector or Post's Facilities Manager will make a pre-inspection after notification. Should the work not be complete, they will issue an inspection list to Contractor with noted items requiring further consideration.

B. FINAL INSPECTION

1) Contracting Officer's Representative will make final inspection after notification from Contractor.
2) Should COR consider Work complete in accordance with requirements of Contract Documents, he will request Contractor to begin Final Clean-up and Project Closeout submittals.
3) Should COR consider Work not complete:
    a) Contractor shall take immediate steps to remedy the stated deficiencies and submit initialed inspection list to the COR certifying Work is complete.
    b) COR will re-inspect Work.

C. REINSPECTING COSTS: Should the Contracting Officer's

Representative be required to perform subsequent inspections of the Work due to the failure of the Contractor to correct deficient work, the additional services will be deducted from the final payment to Contractor.

D. SUBMIT WARRANTY/GUARANTEE: Submit original and duplicate copies of both Contractor's Warranty and Manufacturer's Guarantee for review. After review, Contracting Officer's Representative shall approve final pay application upon receipt of both Contractor's Warranty and Manufacturer's Guarantee.

E. SUBMIT EVIDENCE OF PAYMENTS AND RELEASE OF LIENS
   1) Contractor's Waiver of Liens.
   2) Separate waivers of liens for subcontractors, suppliers, and others with lien rights against property of Owner, together with complete list of those parties.
   3) Consent of Surety

F. FINAL APPLICATION FOR PAYMENT
   1) The Contractor shall submit a final application for payment to the COR. It should include a summary of all previous invoices against the original contact sum, any adjustments with the appropriate backup documents, payments received, and final balance due.
   2) The COR also will determine if billed services have been satisfactorily performed and if billing is correct. If it is determined that the amount billed is incorrect, the COR will within seven days, request the Contractor to submit a revised invoice.
   3) Final payment will not be approved or released until receipt of proper close-out documents.

SECTION D - DELIVERIES AND PERFORMANCE

1. PERMITS, LICENSES, AND OTHER RESPONSIBILITIES:

The Contractor shall, without additional expense to the Government, be responsible for obtaining any necessary licenses and permits for its work on the project, and for complying with any applicable laws, codes, and regulations applicable to the performance of the work. The Contractor shall also be responsible for all damages to persons or property that occur as a result of the Contractor's fault or negligence. The Contractor shall also be responsible for all materials delivered and work performed until completion and acceptance of the entire work, except for any completed unit of work which may have been accepted under the contract. (FAR 52.236-7)

2. SUBCONTRACTORS:

The Contractor shall be responsible for ensuring that any subcontractors or third-party service providers engaged on the project comply with all applicable terms and conditions of this Agreement.

3. ANTICIPATED PERIOD OF PERFORMANCE

A. Solicitation & Award of Contract:
   1) Pre-Proposal Site Visit: 10-20 days prior to Award
   2) Award: Zero Day

B. Pre-Construction Submittals:
   1) Insurance & Bonding: 15 days after Award
   2) Schedule & Product Data: 15 days after Award
   3) Embassy Approval: 15 days after submittal
   4) Material Procurement: 30 days after approval
   5) Crew Information: 5 days before commencing work

C. Mobilization & Construction:
   1) Main Effort: 60 days
   2) Final Clean-Up: 5 days prior to completion

D. TOTAL PERIOD of PERFORMACE: 105 days

4. SUBSTITUTIONS AND PRODUCT OPTIONS

A. "OR-EQUAL CLAUSE":

1) References in the Specifications/Statement of Work to materials, products or equipment by trade name, make, or catalog number, or to specific processes, shall be regarded as establishing a standard of quality and shall not be construed as limiting competition. The Contractor may propose for approval or rejection by the COR the substitution of any material, product, equipment or process that the Contractor believes to be equal to or better than that named in the Specifications/Statement of Work, unless otherwise specifically provided in this contract.
2) Request for substitution constitutes a representation that Contractor:
    - Has investigated proposed product and determined that it is equal to or superior in all respects to that specified.
    - Shall provide same warranties for substitution as for product specified.
    - Shall coordinate installation of accepted substitution into Work and make such other changes as may be required for Work to be complete in all respects.
    - Waives all claims for additional costs, under his responsibility, related to substitution which subsequently becomes apparent.

B. PRIOR APPROVAL REQUIRED

1) The Contractor must receive approval in writing from the COR before substitutions (1) proposed by the Contractor but not yet approved at the time of execution of the contract, or (2) proposed by the Contractor after execution of the contract may be used in the project.
2) Sufficient information to permit evaluation by the Government must accompany any substitution request including but not limited to the reasons for the proposed substitution and data concerning the design, appearance, performance, composition, and relative cost of the proposed substitute.
3) The Contractor shall make requests for substitutions in a timely manner to permit adequate evaluation by the Government.
4) If, in the COR's opinion, the use of such substitute items is not in the best interests of the Government, the Contractor must obtain

the items originally specified with no adjustment in the contract price or completion date.

C. APPROVAL THROUGH SHOP DRAWINGS: The Contractor may propose substitutions of materials in the submittal of shop drawings, provided such substitution is specifically requested in writing in the transmittal of the shop drawings to the COR. Such substitution requests must be made in a timely manner and supported by the required information.

D. FINAL APPROVAL ON DELIVERY: Acceptance or approval of proposed substitutions under the contract are conditioned upon approval of items delivered at the site or approval by sample. Approval by sample shall not limit the Government's right to reject material after delivery to the site if the material does not conform to the approved sample in all material respect.

5. SCHEDULE

A. PRECONSTRUCTION CONFERENCE: A preconstruction conference will be held on or around 10 days after contract award to discuss the schedule, submittals, notice to proceed, mobilization and other important issues that affect construction progress (FAR 52.236-26, Preconstruction Conference).

B. The Contractor shall, within 15 days after award, prepare and submit to the Contracting Officer for approval a practicable schedule showing the order in which the Contractor proposes to perform the work, and the dates on which the Contractor contemplates starting and completing the several salient features of the work (including acquiring materials, plant, and equipment). The schedule shall be in the form of a progress chart of suitable scale to indicate appropriately the percentage of work scheduled for completion by any given date during the period. If the Contractor fails to submit a schedule within the time prescribed, the Contracting Officer may withhold approval of progress payments until the Contractor submits the required schedule.

C. The Contractor shall prepare a monthly progress report, along with the monthly invoice, summing up observations resulting from the inspections, progress, difficulties or irregularities encountered, resolution

of problems, measures taken to improve conditions, recommendations, and other matters related to this contract. The monthly progress reports shall include an annotated schedule showing actual progress of the work.

D. If, in the opinion of the Contracting Officer, the Contractor falls behind the approved schedule, the Contractor shall take steps necessary to improve its progress, including those that may be required by the Contracting Officer, without additional cost to the Government. In this circumstance, the Contracting Officer may require the Contractor to increase the number of shifts, overtime operations, days of work, and/or the amount of construction plant, and to submit for approval any supplementary schedule or schedules in chart form as the Contracting Officer deems necessary to demonstrate how the approved rate of progress will be regained.

E. Failure of the Contractor to comply with the requirements of the Contracting Officer under this clause shall be grounds for a determination by the Contracting Officer that the Contractor is not prosecuting the work with sufficient diligence to ensure completion within the time specified in the contract. Upon making this determination, the Contracting Officer may terminate the Contractor's right to proceed with the work, or any separable part of it, in accordance with the default terms of this contract, or impose liquidated damages for any additional costs actually incurred by the Government as a result of the Contractor's failure to meet the schedule.

6. SUSPENSION OF WORK

A. The Contracting Officer may order the Contractor, in writing, to suspend, delay, or interrupt all or any part of the work of this contract for the period of time that the Contracting Officer determines appropriate for the convenience of the Government.

B. If the performance of all or any part of the work is, for an unreasonable period of time, suspended, delayed, or interrupted (1) by an act of the Contracting Officer in the administration of this contract, or (2) by the Contracting Officer's failure to act within the time specified in this contract (or within a reasonable time if not specified), an adjustment shall be made for any increase in the cost of performance of this contract (excluding profit) necessarily caused by the unreasonable suspension,

delay, or interruption, and the contract modified in writing accordingly. However, no adjustment shall be made under this clause for any suspension, delay, or interruption to the extent that performance would have been so suspended, delayed, or interrupted by any other cause, including the fault or negligence of the Contractor, or for which an equitable adjustment is provided for or excluded under any other term or condition of this contract.

C. A claim under this clause shall not be allowed:
   1) For any costs incurred more than 20 days before the Contractor shall have notified the Contracting Officer in writing of the act or failure to act involved (but this requirement shall not apply as to a claim resulting from a suspension order); and
   2) Unless the claim, in an amount stated, is asserted in writing as soon as practicable after the termination of the suspension, delay, or interruption, but not later than the date of final payment under the contract.

7. WORKING HOURS AND HOLIDAYS

A. The Contractor's personnel must be accompanied by U.S. Embassy escorts at all times on the job site. No work is allowed without escorts on duty.

B. Access will be available from 08:00 hours until 17:00 (Monday through Thursday) and from hours and from 08:00 hours until 12:00 (Fridays) during regular workdays, unless mutually agreed in advance.

C. The daily working schedule can be adjusted, if mutually agreed between the COR and Contractor including overtime on Fridays, Saturday, Sunday, and Holidays. U.S. Embassy Escorts will have lunch from 12:00 until 13:00 hours.

D. Contractor personnel are not expected to work on a holiday. Observance of such days shall not be cause for additional period of performance or entitlement to compensation. If the Contractor's personnel work on a holiday, no form of holiday or other premium compensation will be reimbursed either as a direct or indirect cost.

E. The Contractor must notify the COR and U.S. Embassy Supervisor at

least 48 working hours in advance to schedule overtime work or special work hours.

F. OBSERVANCE OF LEGAL HOLIDAYS: The U.S. Embassy in Malawi observes the following holidays:

New Year's Day	U.S. / Malawian
Chilembwe Day	Malawian
Martin Luther King Jr. Day	U.S.
Presidents' Day	U.S.
Martyrs' Day	Malawian
Eid al-Fitr (TBD)	Malawian
Good Friday	Malawian
Easter Monday	Malawian
Labour Day	Malawian
Kamuzu Day	Malawian
Memorial Day	U.S.
Juneteenth	U.S.
Independence Day	U.S.
Independence Day	Malawian
Labor Day	U.S.
Columbus Day	U.S.
Mother's Day	Malawian
Veterans Day	U.S.
Thanksgiving Day	U.S.
Christmas Day	U.S. / Malawian
Boxing Day	Malawian

1) Plus any other day designated by Federal law, Executive Order or Presidential Proclamation.
2) The actual date of observance for some holidays may vary if the holiday falls on a weekend.

SECTION E – CONTRACT ADMINISTRATION DATA

652.242-70 CONTRACTING OFFICER'S REPRESENTATIVE (COR) (AUG 1999)

(a) The Contracting Officer may designate in writing one or more Government employees, by name or position title, to take action for the Contracting Officer under this contract. Each designee shall be identified as a Contracting Officer's Representative (COR). Such designation(s) shall specify the scope and limitations of the authority so delegated; provided, that the designee shall not change the terms or conditions of the contract, unless the COR is a warranted Contracting Officer, and this authority is delegated in the designation.

(b) The CORs for this contract are listed under Section A

Payment: The Contractor's attention is directed to Section H, 52.232-5, "Payments Under Fixed-Price Construction Contracts".

SECTION F - SPECIAL TERMS AND CONDITIONS

1. SECURITY REQUIREMENTS

GENERAL: The contractor shall comply with all security requirements established by the U.S. Government for work performed at the Government residence 10/145. Security compliance is a material condition of the contract.

A. PERSONNEL ACCESS
1) Contractor personnel must have proper site authorization
2) All contractor personnel must be pre-approved by the Government prior to accessing the site.
3) Access badges must be displayed at all times.

B. SITE CONTROL & RESTRICTED AREAS
1) Contractor personnel may be required to be escorted by authorized Government personnel
2) Work schedule shall be coordinated in advance with the COR and Post Security Office.
3) No unauthorized photography or recording.

C. VEHICLE CONTROL
1) All vehicles, equipment and materials are subjects to inspection at entry/exit.
2) Park only in designated areas.
3) Do not block emergency or security infrastructure.

D. PROPERTY PROTECTION & REMOVAL
1) The contractor shall safeguard all Government facilities and infrastructure.
2) Any damage caused by the contractor personnel shall be repaired at no additional cost to the Government
3) Failure to comply with these security requirements may result in immediate removal of the personnel from the site.

2. OTHER CONTRACTS

The Government may undertake or award other contracts for additional work at or near the site of the work under this contract. The Contractor shall fully cooperate with the other contractors and with Government employees and shall carefully

adapt scheduling and performing the work under this contract to accommodate the additional work, heeding any direction that may be provided by the Contracting Officer. The Contractor shall not commit or permit any act that will interfere with the performance of work by any other contractor or by Government employees. (FAR 52.236-8)

3. USE AND POSSESSION PRIOR TO COMPLETION

A. The Government shall have the right to take possession of or use any completed or partially completed part of the work. Before taking possession of or using any work, the COR shall furnish the Contractor a list of items of work remaining to be performed or corrected on those portions of the work that the Government intends to take possession of or use. However, failure of the COR to list any item of work shall not relieve the Contractor of responsibility for complying with the terms of the contract. The Government's possession or use shall not be deemed an acceptance of any work under the contract.

B. While the Government has such possession or use, the Contractor shall be relieved of the responsibility for the loss of or damage to the work resulting from the Government's possession or use, notwithstanding other provisions of this contract. If prior possession or use by the Government delays the progress of the work or causes additional expense to the Contractor, an equitable adjustment shall be made in the contract price or the time of completion, and the contract shall be modified in writing accordingly.

4. WARRANTY

A. In addition to any other warranties in this contract, the Contractor warrants that work performed under this contract conforms to the contract requirements and is free of any defect in equipment, material, or design furnished, or workmanship performed by the Contractor or any subcontractor or supplier at any tier.

B. This warranty shall continue for a period of 1 year from the date of final acceptance of the work. If the Government takes possession of any part of the work before final acceptance, this warranty shall continue for a period of 1 year from the date the Government takes possession.

C. The Contractor shall remedy at the Contractor's expense any failure to conform, or any defect. In addition, the Contractor shall remedy at the

Contractor's expense any damage to Government-owned or controlled real or personal property, when that damage is the result of:

1) The Contractor's failure to conform to contract requirements; or
2) Any defect of equipment, material, workmanship, or design furnished.

D. The Contractor shall restore any work damaged in fulfilling the terms and conditions of this clause. The Contractor's warranty with respect to work repaired or replaced will run for 1 year from the date of repair or replacement.

E. The Contracting Officer shall notify the Contractor, in writing, within a reasonable time after the discovery of any failure, defect, or damage.

F. If the Contractor fails to remedy any failure, defect, or damage within a reasonable time after receipt of notice, the Government shall have the right to replace, repair, or otherwise remedy the failure, defect, or damage at the Contractor's expense.

G. With respect to all warranties, express or implied, from subcontractors, manufacturers, or suppliers for work performed and materials furnished under this contract, the Contractor shall:

1) Obtain all warranties that would be given in normal commercial practice;
2) Require all warranties to be executed, in writing, for the benefit of the Government, if directed by the Contracting Officer; and
3) Enforce all warranties for the benefit of the Government, if directed by the Contracting Officer.

H. In the event the Contractor's warranty under paragraph (B) of this clause has expired, the Government may bring suit at its expense to enforce a subcontractor's, manufacturer's, or supplier's warranty.

I. Unless a defect is caused by the negligence of the Contractor or subcontractor or supplier at any tier, the Contractor shall not be liable for the repair of any defects of material or design furnished by the Government nor for the repair of any damage that results from any defect in Government-furnished material or design.

J. This warranty shall not limit the Government's rights under the

Inspection and Acceptance clause of this contract with respect to latent defects, gross mistakes, or fraud.

5. INSURANCE, INDEMNITY, AND LIABILITY

A. The Contractor is required by FAR 52.228-5, "Insurance - Work on a Government Installation" to provide whatever insurance is legally necessary. The Contractor shall at its own expense provide and maintain during the entire performance period the following insurance amounts.

B. The Contractor shall carry insurance appropriate for the scale and complexity of the project including but are not limited to:
   1) Contractor's All Risk (CAR) coverage for physical loss or damage to works, materials, and equipment from incidents like fire, theft, and accidental damage.
   2) Property Damage Insurance protecting the U.S. Government and other third parties against damage caused by construction activities, including damage to buildings and vehicles.
   3) Workers' Compensation Insurance covering medical costs, disability benefits, and lost wages for employees injured or ill due to construction work.

C. These coverages shall apply to all workers and activities undertaken or directed by the Contractor or its subcontractors and suppliers in completing the work.

D. The foregoing types and amounts of insurance are the minimums required. The Contractor shall obtain any other types of insurance required by local law or that are ordinarily or customarily obtained in the location of the work. The limit of such insurance shall be provided by law or sufficient to meet normal and customary claims.

E. The Contractor agrees that the Government shall not be responsible for personal injuries or for damages to any property of the Contractor, its officers, agents, servants, and employees, or any other person, arising from an incident to the Contractor's performance of this contract. The Contractor shall hold harmless and indemnify the Government from any and all claims arising therefrom, except in the instance of gross negligence on the part of the Government.

F. The Contractor shall obtain adequate insurance for damage to, or theft of, materials and equipment in insurance coverage for loose transit to the site or in storage on or off the site.

G. The general liability policy required of the Contractor shall name "the United States of America, acting by and through the Department of State", as an additional insured with respect to operations performed under this contract.

H. See additional details on insurance, indemnification, and liability in Contract Clauses.

SECTION G- CLAUSES

52.252-2 CLAUSES INCORPORATED BY REFERENCE (FEB 1998)

This contract incorporates one or more clauses by reference, with the same force and effect as if they were given in full text. Upon request, the Contracting Officer will make their full text available. In addition, the full text of a clause may be accessed electronically at: Acquisition.gov this address is subject to change.

If the Federal Acquisition Regulation (FAR) is not available at the location indicated above, use the Department of State Acquisition website at e-CFR to see the links to the FAR. You may also use an Internet "search engine" (for example, Google, Yahoo or Excite) to obtain the latest location of the most current FAR.

THE FOLLOWING FEDERAL ACQUISITION REGULATION CLAUSES ARE INCORPORATED BY REFERENCE (48 CFR CH. 1):

CLAUSE	TITLE AND DATE
52.202-1	DEFINITIONS (JUN 2020)
52.203-17	CONTRACTOR EMPLOYEE WHISTLEBLOWER RIGHTS (NOV 2023)
52.204-9	PERSONAL IDENTITY VERIFICATION OF CONTRACTOR PERSONNEL (JAN 2011)
52.204-10	REPORTING EXECUTIVE COMPENSATION AND FIRST-TIER SUBCONTRACT AWARDS (JUN 2020)
52.204-13	SYSTEM FOR AWARD MANAGEMENT MAINTENANCE (OCT 2018)
52.204-18	COMMERCIAL AND GOVERNMENT ENTITY CODE MAINTENANCE (AUG 2020)
52.204-19	INCORPORATION BY REFERENCE OF REPRESENTATIONS AND CERTIFICATIONS (DEC 2014)
52.204-27	PROHIBITION ON A BYTEDANCE COVERED APPLICATION (JUN 2023)
52.209-6	PROTECTING THE GOVERNMENT'S INTEREST WHEN

SUBCONTRACTING WITH CONTRACTORS DEBARRED, SUSPENDED OR PROPOSED FOR DEBARMENT OR VOLUNTARILY EXCLUDED (JAN 2025)

52.216-7 ALLOWABLE COST AND PAYMENT (AUG 2018)

52.222-1 NOTICE TO THE GOVERNMENT OF LABOR DISPUTES (FEB 1997)

52.222-19 CHILD LABOR-COOPERATION WITH AUTHORITIES AND REMEDIES (JAN 2025)

52.222-50 COMBATING TRAFFICKING IN PERSONS (NOV 2021)

52.225-5 TRADE AGREEMENTS (NOV 2023)

52.225-13 RESTRICTIONS ON CERTAIN FOREIGN PURCHASES (FEB 2021)

52.225-14 INCONSISTENCY BETWEEN ENGLISH VERSION AND TRANSLATION OF CONTRACT (FEB 2000)

52.226-8 ENCOURAGING CONTRACTOR POLICIES TO BAN TEXT MESSAGING WHILE DRIVING (MAY 2024)

52.228-3 WORKERS' COMPENSATION INSURANCE (DEFENSE BASE ACT) (JUL 2014)

52.228-4 WORKERS' COMPENSATION AND WAR-HAZARD INSURANCE OVERSEAS (APR 1984)

52.228-5 INSURANCE - WORK ON A GOVERNMENT INSTALLATION (JAN 1997)

52.228-11 PLEDGES OF ASSETS (FEB 2021)

52.228-13 ALTERNATIVE PAYMENT PROTECTION (JULY 2000)

52.228-14 IRREVOCABLE LETTER OF CREDIT (NOV 2014)

52.228-15 PERFORMANCE AND PAYMENT BONDS-CONSTRUCTION (JUN 2020)

52.229-6 TAXES - FOREIGN FIXED-PRICE CONTRACTS (FEB 2013)

52.229-7 TAXES- FIXED PRICE CONTRACTS WITH FOREIGN GOVERNMENTS (FEB 2013)

52.232-5 PAYMENTS UNDER FIXED-PRICE CONSTRUCTION CONTRACTS (MAY 2014)

52.232-8 DISCOUNTS FOR PROMPT PAYMENT (FEB 2002)

52.232-11 EXTRAS (APR 1984)

52.232-18 AVAILABILITY OF FUNDS (APR 1984)

52.232-22 LIMITATION OF FUNDS (APR 1984)

52.232-25 PROMPT PAYMENT (JAN 2017)

52.232-27 PROMPT PAYMENT FOR CONSTRUCTION CONTRACTS (JAN 2017)

52.232-33 PAYMENT BY ELECTRONIC FUNDS TRANSFER - SYSTEM FOR AWARD MANAGEMENT (OCT 2018)

52.232-34 PAYMENT BY ELECTRONIC FUNDS TRANSFER – OTHER THAN SYSTEM FOR AWARD MANAGEMENT (JULY 2013)

52.233-1 DISPUTES (MAY 2014) ALTERNATE I (DEC 1991)

52.233-3 PROTEST AFTER AWARD (AUG 1996)

52.236-2 DIFFERING SITE CONDITIONS (APR 1984)

52.236-3 SITE INVESTIGATION AND CONDITIONS AFFECTING THE WORK (APR 1984)

52.236-5 MATERIAL AND WORKMANSHIP (APR 1984)

52.236-6 SUPERINTENDENCE BY THE CONTRACTOR (APR 1984)

52.236-7 PERMITS AND RESPONSIBILITIES (NOV 1991)

52.236-8 OTHER CONTRACTS (APR 1984)

52.236-9 PROTECTION OF EXISTING VEGETATION, STRUCTURES, EQUIPMENT, UTILITIES, AND IMPROVEMENTS (APR 1984)

52.236-10 OPERATIONS AND STORAGE AREAS (APR 1984)

52.236-11 USE AND POSSESSION PRIOR TO COMPLETION (APR 1984)

52.236-12 CLEANING UP (APR 1984)

52.236-13 ACCIDENT PREVENTION (NOV 1991)

52.236-14 AVAILABILITY AND USE OF UTILITY SERVICES (APR 1984)

52.236-15 SCHEDULES FOR CONSTRUCTION CONTRACTS (APR 1984)

52.236-21 SPECIFICATIONS AND DRAWINGS FOR CONSTRUCTION (FEB 1997)

52.236-26 PRECONSTRUCTION CONFERENCE (FEB 1995)

52.242-14 SUSPENSION OF WORK (APR 1984)

52.243-4 CHANGES (JUN 2007)

52.243-5 CHANGES AND CHANGED CONDITIONS (APR 1984)

52.245-2 GOVERNMENT PROPERTY INSTALLATION OPERATION SERVICES (APR 2012)

52.245-9 USE AND CHARGES (APR 2012)

52.246-12 INSPECTION OF CONSTRUCTION (AUG 1996)

52.246-17 WARRANTY OF SUPPLIES OF A NONCOMPLEX NATURE (JUN 2003)

52.246-21 WARRANTY OF CONSTRUCTION (MAR 1994)

52.246-26 REPORTING NONCONFORMING ITEMS (AUG 2024)

52.249-2 TERMINATION FOR CONVENIENCE OF THE GOVERNMENT (FIXED-PRICE) (APR 2012)

52.249-10 DEFAULT (FIXED-PRICE CONSTRUCTION) (APR 1984)

52.249-14 EXCUSABLE DELAYS (APR 1984)

FEDERAL ACQUISITION REGULATION (FAR) CLAUSES INCORPORATED IN FULL TEXT

52.204-25 PROHIBITION ON CONTRACTING FOR CERTAIN TELECOMMUNICATIONS AND VIDEO SURVEILLANCE SERVICES OR EQUIPMENT (NOV 2021)

(a) *Definitions.* As used in this clause—

Backhaul means intermediate links between the core network, or backbone network, and the small subnetworks at the edge of the network (e.g., connecting cell phones/towers to the core telephone network). Backhaul can be wireless (e.g., microwave) or wired (e.g., fiber optic, coaxial cable, Ethernet).

Covered foreign country means The People's Republic of China.

Covered telecommunications equipment or services means–

(1) Telecommunications equipment produced by Huawei Technologies Company or ZTE Corporation (or any subsidiary or affiliate of such entities);

(2) For the purpose of public safety, security of Government facilities, physical security surveillance of critical infrastructure, and other national security purposes, video surveillance and telecommunications equipment produced by Hytera Communications Corporation,

Hangzhou Hikvision Digital Technology Company, or Dahua Technology Company (or any subsidiary or affiliate of such entities);

(3) Telecommunications or video surveillance services provided by such entities or using such equipment; or

(4) Telecommunications or video surveillance equipment or services produced or provided by an entity that the Secretary of Defense, in consultation with the Director of National Intelligence or the Director of the Federal Bureau of Investigation, reasonably believes to be an entity owned or controlled by, or otherwise connected to, the government of a covered foreign country.

Critical technology means–

(1) Defense articles or defense services included on the United States Munitions List set forth in the International Traffic in Arms Regulations under subchapter M of chapter I of title 22, Code of Federal Regulations;

(2) Items included on the Commerce Control List set forth in Supplement No. 1 to part 774 of the Export Administration Regulations under subchapter C of chapter VII of title 15, Code of Federal Regulations, and controlled-

  (i) Pursuant to multilateral regimes, including for reasons relating to national security, chemical and biological weapons proliferation, nuclear nonproliferation, or missile technology; or

  (ii) For reasons relating to regional stability or surreptitious listening;

(3) Specially designed and prepared nuclear equipment, parts and components, materials, software, and technology covered by part 810 of title 10, Code of Federal Regulations (relating to assistance to foreign atomic energy activities);

(4) Nuclear facilities, equipment, and material covered by part 110 of title 10, Code of Federal Regulations (relating to export and import of nuclear equipment and material);

(5) Select agents and toxins covered by part 331 of title 7, Code of Federal Regulations, part 121 of title 9 of such Code, or part 73 of title 42 of such Code; or

(6) Emerging and foundational technologies controlled pursuant to section 1758 of the Export Control Reform Act of 2018 (50 U.S.C. 4817).

Interconnection arrangements means arrangements governing the physical connection of two or more networks to allow the use of another's network to hand off traffic where it is ultimately delivered (e.g., connection of a customer of telephone provider A to a customer of telephone company B) or sharing data and other information resources.

Reasonable inquiry means an inquiry designed to uncover any information in the entity's possession about the identity of the producer or provider of covered telecommunications equipment or services used by the entity that excludes the need to include an internal or third-party audit.

Roaming means cellular communications services (e.g., voice, video, data) received from a visited network when unable to connect to the facilities of the home network either because signal coverage is too weak or because traffic is too high.

Substantial or essential component means any component necessary for the proper function or performance of a piece of equipment, system, or service.

(b)Prohibition.

(1) Section 889(a)(1)(A) of the John S. McCain National Defense Authorization Act for Fiscal Year 2019 (Pub. L. 115-232) prohibits the head of an executive agency on or after August 13, 2019, from procuring or obtaining, or extending or renewing a contract to procure or obtain, any equipment, system, or service that uses covered telecommunications equipment or services as a substantial or essential component of any system, or as critical technology as part of any system. The Contractor is prohibited from providing to the Government any equipment, system, or service that uses covered telecommunications equipment or services as a substantial or essential component of any system, or as critical technology as part of any system, unless an exception at paragraph (c) of this clause applies or the covered telecommunication equipment or services are covered by a waiver described in FAR 4.2104.

(2) Section 889(a)(1)(B) of the John S. McCain National Defense Authorization Act for Fiscal Year 2019 (Pub. L. 115-232) prohibits the head of an executive agency on or after August 13, 2020, from entering into a contract, or extending or renewing a contract, with an entity that uses any equipment, system, or service that uses covered telecommunications equipment or services as a substantial or essential component of any system, or as critical technology as part of any system, unless an exception at paragraph (c) of this clause applies or the covered telecommunication equipment or services are covered by a waiver described in FAR 4.2104. This prohibition applies to the use of covered telecommunications equipment or services, regardless of whether that use is in performance of work under a Federal contract.

(c) *Exceptions*. This clause does not prohibit contractors from providing—

(1) A service that connects to the facilities of a third-party, such as backhaul, roaming, or interconnection arrangements; or

(2) Telecommunications equipment that cannot route or redirect user data traffic or permit visibility into any user data or packets that such equipment transmits or otherwise handles.

(d) *Reporting requirement*. (1) In the event the Contractor identifies covered telecommunications equipment or services used as a substantial or essential component of any system, or as critical technology as part of any system, during contract performance, or the Contractor is notified of such by a subcontractor at any tier or by any other source, the Contractor shall report the information in paragraph (d)(2) of this clause to the Contracting Officer, unless elsewhere in this contract are established procedures for reporting the information; in the case of the Department of Defense, the Contractor shall report to the website at https://dibnet.dod.mil. For indefinite delivery contracts, the Contractor shall report to the Contracting Officer for the indefinite delivery contract and the Contracting Officer(s) for any affected order or, in the case of the Department of Defense, identify both the indefinite delivery contract and any affected orders in the report provided at https://dibnet.dod.mil.

(2) The Contractor shall report the following information pursuant to paragraph (d)(1) of this clause

(i) Within one business day from the date of such identification or notification: the contract number; the order number(s), if applicable; supplier name; supplier unique entity identifier (if known); supplier Commercial and Government Entity (CAGE) code (if known); brand; model number (original equipment manufacturer number, manufacturer part number, or wholesaler number); item description; and any readily available information about mitigation actions undertaken or recommended.

(ii) Within 10 business days of submitting the information in paragraph (d)(2)(i) of this clause: any further available information about mitigation actions undertaken or recommended. In addition, the Contractor shall describe the efforts it undertook to prevent use or submission of covered telecommunications equipment or services, and any additional efforts that will be incorporated to prevent future use or submission of covered telecommunications equipment or services.

(e) *Subcontracts*. The Contractor shall insert the substance of this clause, including this paragraph (e) and excluding paragraph (b)(2), in all subcontracts and other contractual instruments, including subcontracts for the acquisition of commercial products or commercial services.

(End of clause)

52.204-90 Offeror Identification. "Offeror Identification (AUG 2025) (DEVIATION 25-19)" (effective November 3, 2025)

If the Offeror will not have an active Federal Government contracts registration in the System for Award Management (https://www.sam.gov) when submitting its offer, it shall complete paragraphs (c) and (d) of this provision and include its responses with its offer.

(a) *Definitions*. As used in this provision—

Commercial and Government Entity (CAGE) code has the meaning provided in the clause at FAR 52.204-91, Contractor Identification, of this solicitation.

Common parent means that corporate entity that owns or controls an affiliated group of corporations that files its Federal income tax returns on a consolidated basis, and of which the offeror is a member.

Electronic Funds Transfer (EFT) indicator means a bank account identifier to establish additional System for Award Management records for identifying alternative EFT accounts (see part 32) for the same entity.

Highest-level owner means the entity that owns or controls an immediate owner of the offeror, or that owns or controls one or more entities that control an immediate owner of the offeror. No entity owns or exercises control of the highest-level owner.

Immediate owner means an entity, other than the offeror, that has direct control of the offeror. Indicators of control include, but are not limited to, one or more of the following: ownership or interlocking management, identity of interests among family members, shared facilities and equipment, and the common use of employees. There may be more than one immediate owner (e.g., joint ventures).

Predecessor means an entity whose assets were acquired by the offeror or another entity (most often through merger or acquisition) and whose affairs are now carried out by the offeror or the other entity under a new name.

Taxpayer Identification Number means the number required by the Internal Revenue Service (IRS) to be used by the offeror to report income tax and other returns. It may be either a Social Security Number or an Employer Identification Number.

Unique entity identifier (UEI) has the meaning provided in the clause at FAR 52.204-91, Contractor Identification, of this solicitation.

(b) *Unique entity identifier (UEI)*.

(1) The Offeror shall enter, in the block with its name and address on the cover page of its offer, the annotation "Unique Entity Identifier" followed

by the UEI that identifies the Offeror's name and address exactly as stated in the offer. The Offeror shall also enter its EFT indicator, if applicable.

(2) If the Offeror does not have a UEI, it shall go to https://www.sam.gov to obtain one. The Government will independently validate the existence and uniqueness of the Offeror before assigning a UEI.

(c) *Taxpayer identification*. The Offeror shall provide with its offer the following information that is necessary to comply with debt collection requirements of 31 U.S.C. 7701(c) and 3325(d); reporting requirements of 26 U.S.C. 6041, 6041A, and 6050M; and the implementing IRS regulations:

(1) Taxpayer identification number (TIN)

□ TIN: ____;

□ TIN has been applied for; or

□ TIN is not required because:

□ Offeror is a nonresident alien, foreign corporation, or foreign partnership that does not have income effectively connected with the conduct of a trade or business in the United States and does not have an office or place of business or a fiscal paying agent in the United States;

□ Offeror is an agency or instrumentality of a foreign government; or

□ Offeror is an agency or instrumentality of the Federal Government.

(2) *Type of organization.*

□ Sole proprietorship;

□ Partnership;

□ Corporate entity (not tax-exempt);

□ Corporate entity (tax-exempt);

□ Government entity (Federal, State, or local);

□ Foreign government;

□ International organization per 26 CFR 1.6049-4; or

□ Other.

(3) *Common parent.*

□ Offeror is not owned or controlled by a common parent as defined in paragraph (a) of this provision; or

□ Name and TIN of common parent:

Name: _____
TIN:_____

(4) The TIN provided in paragraph (c)(1) of this provision may be matched with IRS records to verify the accuracy of the Offeror's TIN. The Government may use the TIN to collect and report on any delinquent amounts arising out of the Offeror's relationship with the Government (31 U.S.C. 7701(c)(3)).

(d) *Commercial and Government Entity (CAGE) code*.

(1) The Offeror shall provide its CAGE code with its offer with its name and location address or otherwise include it prominently in its offer. The CAGE code shall be for that name and location address. Insert the word "CAGE" before the code. The Offeror may obtain a CAGE code as indicated in the following table.

If the Offeror is…	**Then…**
Located in the United States or its outlying areas	Submit a request to the DLA CAGE Branch via https://cage.dla.mil
Located outside the United States and its outlying areas and its country is a member of the North Atlantic Treaty Organization (NATO) or a sponsored nation	Contact the appropriate National Codification Bureau (https://www.nato.int/structur/ac/135/about/contacts)
Located outside the United States and its outlying areas and its country is not a member of NATO or a sponsored nation	Contact the NATO Support and Procurement Agency (NSPA) (https://eportal.nspa.nato.int/AC135Public/scage/CageList.aspx)

(2) The Offeror shall provide the CAGE code and legal business name (Do not use a "doing business as" name) for—

(i) Its immediate owner(s), if any;

(ii) Its highest-level owner, if any; and

(iii) Any predecessor(s), or predecessor of an Offeror's predecessor, that held a Federal contract or grant within the last three years.

Owner Type	CAGE Code	Legal Business Name
Immediate owner		
Highest-level owner		
Predecessor*		

* Predecessor CAGE code may be marked "Unknown."

(3) If the Offeror has more than one immediate owner (such as a joint venture), give the information for each owner (or joint venture participant). If the Offeror has more than one predecessor, provide information for each predecessor in reverse chronological order.

(End of provision)

52.204-7 SYSTEM FOR AWARD MANAGEMENT

(c) *Representations and certifications*.

(1) The following FAR solicitation provisions contain entity-level representations and certifications that the Offeror shall submit as part of their Federal Government contracts registration in SAM:

Provision	Title	Date
52.204-5	Women-Owned Business (Other Than Small Business)	Oct 2014
52.209-2	Prohibition on Contracting with Inverted Domestic Corporations—Representation	Nov 2015
52.209-5	Certification Regarding Responsibility Matters	Aug 2020
52.209-11	Representation by Corporations Regarding Delinquent Tax Liability or a Felony Conviction under any Federal Law	Feb 2016
52.219-1	Small Business Program Representations	Feb 2024
52.219-1 Alt I	Small Business Program Representations, with its Alternate I	Feb 2024

52.219-1 Alt II	Small Business Program Representations, with its Alternate II	Mar 2023
52.226-2	Historically Black College or University and Minority Institution Representation	Oct 2014

(2) By submitting its offer, the Offeror verifies that, as of the date of its offer, its representations and certifications posted electronically in SAM for the provisions listed in paragraph (c)(1) of this provision are current, accurate, and complete. The Offeror's representations and certifications in SAM are hereby incorporated by reference into its offer.

(d) *Other information*. The Offeror shall provide more information on its business operations and type that is necessary to be considered for award of certain contracts and financial information necessary to receive payment under contracts.

(End of provision)

52.204-91 CONTRACTOR IDENTIFICATION

Definitions. As used in this clause—

Commercial and Government Entity code means—

(1) An identifier assigned to entities located in the United States or its outlying areas by the Defense Logistics Agency (DLA) Commercial and Government Entity (CAGE) Branch to identify a commercial or government entity by unique location (referred to as "CAGE code"); or

(2) An identifier assigned by a member of the North Atlantic Treaty Organization (NATO) or by the NATO Support and Procurement Agency (NSPA) to entities located outside the United States and its outlying areas that the DLA CAGE Branch records and maintains in the CAGE master file (referred to as "NCAGE code").

Unique entity identifier means an identifier used to identify a specific commercial, nonprofit, or Government entity.

(b) *Unique entity identifier (UEI)*. The Contractor shall ensure that its UEI is maintained throughout the life of the contract.

(c) *Commercial and Government Entity (CAGE) code*. The Contractor shall ensure that the CAGE code is maintained throughout the life of the contract. The Contractor shall request changes to a CAGE code as indicated in the following table.

If the Contractor is…	**Then…**
Registered in the System for Award Management (SAM)	Initiate the change by updating its SAM registration
Located in the United States or its outlying areas and is not registered in SAM	Submit a change request to the DLA CAGE Branch via https://cage.dla.mil
Located outside the United States and its outlying areas and is not registered in SAM	Request a change by contacting the appropriate National Codification Bureau (https://www.n ato.int/structure/ac/135/about/ contacts) or NSPA (https://eportal.nspa.nato.int/AC135Public/scage/CageList.aspx)

(d) *Communicating changes.* The Contractor shall communicate any change to its UEI or CAGE code to the Contracting Officer within 30 days after the change, so a modification can be issued to update the UEI or CAGE code on this contract. A change in the UEI does not necessarily require a novation.

(End of clause)

52.213-4 TERMS AND CONDITIONS—SIMPLIFIED ACQUISITIONS (OTHER THAN COMMERCIAL PRODUCTS AND COMMERCIAL SERVICES) (MAR 2026)

(a) The Contractor shall comply with the following Federal Acquisition Regulation (FAR) clauses that are incorporated by reference:

(1) The clauses listed below implement provisions of law or Executive order:

(i) 52.203-19, Prohibition on Requiring Certain Internal Confidentiality Agreements or Statements (Jan 2017) (section 743 of Division E, Title VII, of the Consolidated and Further Continuing Appropriations Act, 2015 (Pub. L. 113-235) and its successor provisions in subsequent appropriations acts (and as extended in continuing resolutions)).

(ii) 52.204-23, Prohibition on Contracting for Hardware, Software, and Services Developed or Provided by Kaspersky Lab Covered Entities (Dec 2023) (Section 1634 of Pub. L. 115-91).

(iii) 52.204-25, Prohibition on Contracting for Certain Telecommunications and Video Surveillance Services or Equipment. (Nov 2021) (Section 889(a)(1)(A) of Pub. L. 115-232).

(iv) 52.204-27, Prohibition on a ByteDance Covered Application (Jun 2023) (Section 102 of Division R of Pub. L. 117-328), unless the agency grants an exception - see paragraph (b) of 52.204-27.

(iv) 52.204-30, Federal Acquisition Supply Chain Security Act Orders—Prohibition. (Dec 2023) (Pub. L. 115–390, title II).

(v) 52.222-3, Convict Labor (Jun 2003) (E.O. 11755).

(vi) 52.222-21, Prohibition of Segregated Facilities (Oct 2025).

(vii) 52.222-26, Equal Opportunity (Sep 2016) (E.O. 11246).

(ix) 52.225-13, Restrictions on Certain Foreign Purchases (Feb 2021) (E.O.s, proclamations, and statutes administered by the Office of Foreign Assets Control of the Department of the Treasury).

(x) 52.232-40, Providing Accelerated Payments to Small Business Subcontractors (Mar 2023) (31 U.S.C. 3903 and 10 U.S.C. 3801).

(xi) 52.233-3, Protest After Award (Aug 1996) (31 U.S.C. 3553).

(xii) 52.233-4, Applicable Law for Breach of Contract Claim (Oct 2004) (Pub. L. 108-77 and 108-78 (19 U.S.C. 3805 note)).

(2) Listed below are additional clauses that apply:

(i) 52.232-1, Payments (Apr 1984).

(ii) 52.232-8, Discounts for Prompt Payment (Feb 2002).

(iii) 52.232-11, Extras (Apr 1984).

(iv) 52.232-25, Prompt Payment (Jan 2017).

(iv) 52.232-39, Unenforceability of Unauthorized Obligations (Jun 2013).

(v) 52.233-1, Disputes (May 2014).

(vi) 52.244-6, Subcontracts for Commercial Products and Commercial Services (Jan 2025).

(vii) 52.253-1, Computer Generated Forms (Jan 1991).

(b) The Contractor shall comply with the following FAR clauses, incorporated by reference, unless the circumstances do not apply:

(1) The clauses listed below implement provisions of law or Executive order:

(i) 52.203-17, Contractor Employee Whistleblower Rights (Nov 2023) (41 U.S.C. 4712); this clause does not apply to contracts of DoD, NASA, the Coast Guard, or applicable elements of the intelligence community—see FAR 3.900(a).

(ii) 52.204-10, Reporting Executive Compensation and First-Tier Subcontract Awards (Jun 2020)(Pub. L. 109-282) (31 U.S.C. 6101 note) (Applies to contracts valued at or above the threshold specified in FAR 4.1403(a) on the date of award of this contract).

(iii) 52.222-19, Child Labor—Cooperation with Authorities and Remedies (Mar 2026) (E.O. 13126) (Applies to contracts for supplies exceeding the micro-purchase threshold, as defined in 2.101 on the date of award of this contract).

(iv) 52.222-20, Contracts for Materials, Supplies, Articles, and Equipment., Contracts for Materials, Supplies, Articles, and Equipment (Jun 2020) (41 U.S.C. chapter 65) (Applies to

supply contracts over the threshold specified in FAR 22.602 on the date of award of this contract, in the United States, Puerto Rico, or the U.S. Virgin Islands).

(iv) 52.222-35, Equal Opportunity for Veterans (Jun 2020) (38 U.S.C. 4212) (Applies to contracts valued at or above the threshold specified in FAR 22.1303(a) on the date of award of this contract).

(v) 52.222-36, Equal Employment for Workers with Disabilities (Jun 2020) (29 U.S.C. 793) (Applies to contracts over the threshold specified in FAR 22.1408(a) on the date of award of this contract, unless the work is to be performed outside the United States by employees recruited outside the United States). (For purposes of this clause, "United States" includes the 50 States, the District of Columbia, Puerto Rico, the Northern Mariana Islands, American Samoa, Guam, the U.S. Virgin Islands, and Wake Island.)

(vi) 52.222-37, Employment Reports on Veterans (Jun 2020) (38 U.S.C. 4212) (Applies to contracts valued at or above the threshold specified in FAR 22.1303(a) on the date of award of this contract).

(vii) 52.222-41, Service Contract Labor Standards (Aug 2018) (41 U.S.C. chapter 67) (Applies to service contracts over $2,500 that are subject to the Service Contract Labor Standards statute and will be performed in the United States, District of Columbia, Puerto Rico, the Northern Mariana Islands, American Samoa, Guam, the U.S. Virgin Islands, Johnston Island, Wake Island, or the outer Continental Shelf).

(ix) (A) 52.222-50, Combating Trafficking in Persons (Oct 2025) (22 U.S.C. chapter 78 and E.O. 13627) (Applies to all solicitations and contracts).

(B) Alternate I (Mar 2015) (Applies if the Contracting Officer has filled in the following information with regard to applicable directives or notices: Document title(s), source for obtaining document(s), and contract performance location outside the United States to which the document applies).

(x) 52.222-55, Minimum Wages for Contractor Workers Under Executive Order 14026 (Jan 2022) (Applies when 52.222-6 or 52.222-41 are in the contract and performance in whole or in part is in the United States (the 50 States, the District of Columbia, Puerto Rico, the Northern Mariana Islands, American Samoa, Guam, the U.S. Virgin Islands, Johnston Island, Wake Island, and the outer Continental Shelf as defined in the Outer Continental Shelf Lands Act (43 U.S.C. 1331, *et seq.*))).

(xi) 52.222-62, Paid Sick Leave Under Executive Order 13706 (Jan 2022) (E.O. 13706) (Applies when 52.222-6 or 52.222-41 are in the contract and performance in whole or in part is in the United States (the 50 States and the District of Columbia.))

(xii) 52.223-5, Pollution Prevention and Right-to-Know Information (May 2024) (42 U.S.C. 11001-11050 and 13101-13109) (Applies to services performed on Federal facilities).

(xiii) 52.223-11, Ozone-Depleting Substances and High Global Warming Potential Hydrofluorocarbons (May 2024) (42 U.S.C. 7671, *et seq.*) (Applies to contracts for products as prescribed at FAR 23.109(d)(1)).

(xiv) 52.223-12, Maintenance, Service, Repair, or Disposal of Refrigeration Equipment and Air Conditioners (May 2024) (42 U.S.C. 7671, *et seq.*) (Applies to maintenance, service, repair, or disposal of refrigeration equipment and air conditioners).

(xv) 52.223-20, Aerosols (May 2024) (42 U.S.C. 7671, *et seq.*) (Applies to contracts for products that may contain high global warming potential hydrofluorocarbons as a propellant or as a solvent; or contracts for maintenance or repair of electronic or mechanical devices).

(xvi) 52.223-21, Foams (May 2024) (42 U.S.C. 7671, *et seq.*) (Applies to contracts for products that may contain high global warming potential hydrofluorocarbons or refrigerant blends containing hydrofluorocarbons as a foam blowing agent; or contracts for construction of buildings or facilities.

(xvii) 52.223-23, Sustainable Products and Services (May 2024) (E.O. 14057, 7 U.S.C. 8102, 42 U.S.C. 6962, 42 U.S.C. 8259b, and 42 U.S.C. 7671l) (Applies to contracts when the agency identifies in the statement of work, or elsewhere in the contract, the sustainable products and services that apply to the acquisition).

(xviii) (A) 52.225-1, Buy American-Supplies (Oct 2022) (41 U.S.C. chapter 67) (Applies to contracts for supplies, and to contracts for services involving the furnishing of supplies, for use in the United States or its outlying areas, if the value of the supply contract or supply portion of a service contract exceeds the micro-purchase threshold, as defined in 2.101 on the date of award of this contract, and the acquisition-

(1) Is set aside for small business concerns; or

(2) Cannot be set aside for small business concerns (see 19.502-2), and does not exceed $50,000).

(B) *Alternate I* (OCT 2022) (Applies if the Contracting Officer has filled in the domestic content threshold below, which will apply to the entire contract period of performance. Substitute the following sentence for the first sentence of paragraph (1)(ii)(A) of the definition of *domestic end product* in paragraph (a) of 52.225-1: (A) The cost of its components mined, produced, or manufactured in the United States exceeds ____ percent of the cost of all its components. [*Contracting officer to insert the percentage per instructions at 13.302-5(d)(4).*])

(xix) 52.226-6, Promoting Excess Food Donation to Nonprofit Organizations., Promoting Excess Food Donation to Nonprofit Organizations (Jun 2020) (42 U.S.C. 1792) (Applies to contracts greater than the threshold specified in FAR 26.404 on the date of award of this contract, that provide for the provision, the service, or the sale of food in the United States).

(xx) 52.232-33, Payment by Electronic Funds Transfer-System for Award Management (Oct 2013) (Applies when the payment will be made by electronic funds transfer (EFT) and the payment office uses the System for Award Management (SAM) as its source of EFT information).

(xxi) 52.232-34, Payment by Electronic Funds Transfer-Other than System for Award Management (Jul 2013) (Applies when the payment will be made by EFT and the payment office does not use the SAM database as its source of EFT information).

(xxii) 52.240-1, Prohibition on Unmanned Aircraft Systems Manufactured or Assembled by American Security Drone Act-Covered Foreign Entities (Nov 2024) (Sections 1821-1826, Pub. L. 118-31, 41 U.S.C. 3901 note prec.).

(xxiii) 52.247-64, Preference for Privately Owned U.S.-Flag Commercial Vessels (Nov 2021) (46 U.S.C. 55305)(Applies to supplies transported by ocean vessels (except for the types of subcontracts listed at 47.504(d)).

(xxiv) 52.247-69, Reporting Requirement for U.S.-Flag Air Carriers Regarding Training to Prevent Human Trafficking (Jan 2025) (49 U.S.C. 40118(g)). (Applies to contracts with a U.S.-flag carrier for the transportation by air of passengers; does not apply to contracts awarded by the Department of Defense or contracts for commercial products).

(2) Listed below are additional clauses that may apply:

(i) 52.204-21, Basic Safeguarding of Covered Contractor Information Systems (Nov 2021) (Applies to contracts when the contractor or a subcontractor at any tier may have Federal contract information residing in or transiting through its information system.)

(ii) 52.209-6, Protecting the Government's Interest When Subcontracting with Contractors Debarred, Suspended, Proposed for Debarment, or Voluntarily Excluded (Jan 2025) (Applies to contracts over the threshold specified in FAR 9.405-2(b) on the date of award of this contract).

(iii) 52.211-17, Delivery of Excess Quantities (Sept 1989) (Applies to fixed-price supplies).

(iv) 52.247-29, F.o.b. Origin (Feb 2006) (Applies to supplies if delivery is f.o.b. origin).

(iv) 52.247-34, F.o.b. Destination (Jan 1991) (Applies to supplies if delivery is f.o.b. destination).

(c) *FAR 52.252-2, Clauses Incorporated by Reference (Feb 1998)*. This contract incorporates one or more clauses by reference, with the same force and effect as if they were given in full text. Upon request, the Contracting Officer will make their full text available. Also, the full text of a clause may be accessed electronically at this/these address(es):

_____

_____

[Insert one or more Internet addresses]

(d) *Inspection/Acceptance*. The Contractor shall tender for acceptance only those items that conform to the requirements of this contract. The Government reserves the right to inspect or test any supplies or services that have been tendered for acceptance. The Government may require repair or replacement of nonconforming supplies or reperformance of nonconforming services at no increase in contract price. The Government must exercise its post acceptance rights-

(1) Within a reasonable period of time after the defect was discovered or should have been discovered; and

(2) Before any substantial change occurs in the condition of the item, unless the change is due to the defect in the item.

(e) *Excusable delays*. The Contractor shall be liable for default unless nonperformance is caused by an occurrence beyond the reasonable control of the Contractor and without its fault or negligence, such as acts of God or the public enemy, acts of the Government in either its sovereign or contractual capacity, fires, floods, epidemics, quarantine restrictions, strikes, unusually severe weather, and delays of common carriers. The Contractor shall notify the Contracting Officer in writing as soon as it is reasonably possible after the commencement of any excusable delay, setting forth the full particulars in connection therewith, shall remedy such occurrence with all reasonable dispatch, and shall promptly give written notice to the Contracting Officer of the cessation of such occurrence.

(f) *Termination for the Government's convenience*. The Government reserves the right to terminate this contract, or any part hereof, for its sole convenience. In the event of such termination, the Contractor shall immediately stop all work hereunder and shall immediately cause any and all of its suppliers and subcontractors to cease work. Subject to the terms of this contract, the Contractor shall be paid a percentage of the contract price reflecting the percentage of the work performed prior to the notice of termination, plus reasonable charges that the Contractor can demonstrate to the satisfaction of the Government, using its standard record keeping system, have resulted from the termination. The Contractor shall not be required to comply with the cost accounting standards or contract cost principles for this purpose. This paragraph does not give the Government any right to audit the

Contractor's records. The Contractor shall not be paid for any work performed or costs incurred that reasonably could have been avoided.

(g) *Termination for cause*. The Government may terminate this contract, or any part hereof, for cause in the event of any default by the Contractor, or if the Contractor fails to comply with any contract terms and conditions, or fails to provide the Government, upon request, with adequate assurances of future performance. In the event of termination for cause, the Government shall not be liable to the Contractor for any amount for supplies or services not accepted, and the Contractor shall be liable to the Government for any and all rights and remedies provided by law. If it is determined that the Government improperly terminated this contract for default, such termination shall be deemed a termination for convenience.

(h) *Warranty*. The Contractor warrants and implies that the items delivered hereunder are merchantable and fit for use for the particular purpose described in this contract.

(End of clause)

THE FOLLOWING DEPARTMENT OF STATE ACQUISITION REGULATION (DOSAR) CLAUSE(S) IS/ARE SET FORTH IN FULL TEXT:

652.204-70 DEPARTMENT OF STATE PERSONAL IDENTIFICATION CARD ISSUANCE PROCEDURES (FEB 2015)

(a) The Contractor shall comply with the Department of State (DOS) Personal Identification Card Policy and Procedures for all employees performing under this contract who require frequent and continuing access to DOS facilities, or information systems. The Contractor shall insert the substance of this clause in all subcontracts when the subcontractor's employees will require frequent and continuing access to DOS facilities, or information systems.

(b) The DOS Personal Identification Card Policy and Procedures may be accessed at *http://www.state.gov/m/ds/rls/rpt/c21664.htm*.

(End of clause)

652.229-71 PERSONAL PROPERTY DISPOSITION AT POSTS ABROAD (AUG 1999)

Regulations at 22 CFR Part 136 require that U.S. Government employees and their families do not profit personally from sales or other transactions with persons who are not themselves entitled to exemption from import restrictions, duties, or taxes. Should the Contractor experience importation or tax privileges in a foreign country because of its contractual relationship to the United States Government, the Contractor shall observe the requirements of 22 CFR Part 136 and all policies, rules, and procedures issued by the chief of mission in that foreign country.

(End of clause)

652.236-70 ADDITIONAL SAFETY MEASURES (OCT 2017)

In addition to the safety/accident prevention requirements of FAR 52.236-13, Accident Prevention Alternate I, the contractor shall comply with the following additional safety measures.

(a) *High Risk Activities.* If the project contains any of the following high-risk activities, the contractor shall follow the section in the latest edition, as of the date of the solicitation, of the U.S. Army Corps of Engineers Safety and Health manual, EM 385-1-1, that corresponds to the high risk activity. Before work may proceed, the contractor must obtain approval from the COR of the written safety plan required by FAR 52.236-13, Accident Prevention Alternate I (see paragraph (f) below), containing specific hazard mitigation and control techniques.
   (1) Scaffolding;
   (2) Work at heights above 1.8 meters;
   (3) Trenching or other excavation greater than one (1) meter in depth;
   (4) Earth-moving equipment and other large vehicles;
   (5) Cranes and rigging;
   (6) Welding or cutting and other hot work;
   (7) Partial or total demolition of a structure;

(8) Temporary wiring, use of portable electric tools, or other recognized electrical hazards. Temporary wiring and portable electric tools require the use of a ground fault circuit interrupter (GFCI) in the affected circuits; other electrical hazards may also require the use of a GFCI;

(9) Work in confined spaces (limited exits, potential for oxygen less than 19.5 percent or combustible atmosphere, potential for solid or liquid engulfment, or other hazards considered to be immediately dangerous to life or health such as water tanks, transformer vaults, sewers, cisterns, etc.).

(10) Hazardous materials - a material with a physical or health hazard including but not limited to, flammable, explosive, corrosive, toxic, reactive or unstable, or any operations, which creates any kind of contamination inside an occupied building such as dust from demolition activities, paints, solvents, etc.; or

(11) Hazardous noise levels as required in EM 385-1 Section 5B or local standards if more restrictive.

(b) *Safety and Health Requirements*. The contractor and all subcontractors shall comply with the latest edition of the U.S. Army Corps of Engineers Safety and Health manual EM 385-1-1, or OSHA 29 CFR parts 1910 or 1926 if no EM 385-1-1 requirements are applicable, and the accepted contractor's written safety program.

(c) *Mishap Reporting*. The contractor is required to report **immediately** all mishaps to the COR and the contracting officer. A "mishap" is any event causing injury, disease or illness, death, material loss or property damage, or incident causing environmental contamination. The mishap reporting requirement shall include fires, explosions, hazardous materials contamination, and other similar incidents that may threaten people, property, and equipment.

(d) *Records*. The contractor shall maintain an accurate record on all mishaps incident to work performed under this contract resulting in death, traumatic injury, occupational disease, or damage to or theft of property, materials,

supplies, or equipment. The contractor shall report this data in the manner prescribed by the contracting officer.

(e) *Subcontracts*. The contractor shall insert this clause, including this paragraph (e), with appropriate changes in the designation of the parties, in subcontracts.

(f) *Written program*. The plan required by paragraph (f)(1) of the clause entitled "Accident Prevention Alternate I" shall be known as the Site Safety and Health Plan (SSHP) and shall address any activities listed in paragraph (a) of this clause, or as otherwise required by the contracting officer/COR.

(1) The SSHP shall be submitted at least 10 working days prior to commencing any activity at the site.

(2) The plan must address developing activity hazard analyses (AHAs) for specific tasks. The AHAs shall define the activities being performed and identify the work sequences, the specific anticipated hazards, site conditions, equipment, materials, and the control measures to be implemented to eliminate or reduce each hazard to an acceptable level of risk. Work shall not begin until the AHA for the work activity has been accepted by the COR and discussed with all engaged in the activity, including the Contractor, subcontractor(s), and Government on-site representatives.

(3) The names of the Competent/Qualified Person(s) required for a particular activity (for example, excavations, scaffolding, fall protection, other activities as specified by EM 385-1-1) shall be identified and included in the AHA. Proof of their competency/ qualification shall be submitted to the contracting officer or COR for acceptance prior to the start of that work activity. The AHA shall be reviewed and modified as necessary to address changing site conditions, operations, or change of competent/qualified person(s).

(End of clause)

652.242-73 AUTHORIZATION AND PERFORMANCE (AUG 1999)

(a) The Contractor warrants the following:

(1) That is has obtained authorization to operate and do business in the country or countries in which this contract will be performed;

(2) That is has obtained all necessary licenses and permits required to perform this contract; and,

(3) That it shall comply fully with all laws, decrees, labor standards, and regulations of said country or countries during the performance of this contract.

(b) If the party actually performing the work will be a subcontractor or joint venture partner, then such subcontractor or joint venture partner agrees to the requirements of paragraph (a) of this clause.

(End of clause)

652.243-70 NOTICES (AUG 1999)

Any notice or request relating to this contract given by either party to the other shall be in writing. Said notice or request shall be mailed or delivered by hand to the other party at the address provided in the schedule of the contract. All modifications to the contract must be made in writing by the Contracting Officer.

(End of clause)

SECTION H – INSTRUCTIONS ON HOW TO SUBMIT A QUOTATION

1. SUMMARY OF BID INSTRUCTIONS

Each offer shall consist of the following parts and submittals:

Part	Title
I	Executed SF 1442 Form
II	Price Proposal or suitable alternative
III	Completed Representations and Certifications, and proof of SAM.gov registration or effort to initiate SAM.gov registration
IV	Technical Qualifications Proposal -- including but not limited to: - Evidence of Basic Business Requirements in Section 4.B.1 below. - Proof of relevant experience and prior successful performance - Relevant experience of key personnel proposed for the project - Sample site safety plan or program - Ability to provide performance bond or suitable alternative performance security - Responses to other criteria set forth in Section 4 below - An explanation of any deviations, exceptions, or conditional assumptions taken with respect to any of the instructions or requirements of this solicitation - Clear statement of ability to acquire the necessary materials to complete the project, or delineation of the materials the Contractor would propose be acquired by the U.S. Government

2. SUMBISSION DETAILS

As indicated on the cover page:

A. Complete proposals must be submitted electronically to LilongweGSOProcurement@State.gov.

B. Proposals are **due by August 17, 2026 @0200 PM.** No proposals will be accepted after this time.

C. Submissions must be:
   1) Complete. Incomplete proposals may be rejected.
   2) In English.
   3) In common file formats such as MS Word, MS Excel, or Adobe Acrobat pdf.
   4) In file sizes not to exceed 10MB total in any single email. Proposals larger than 10MB total should be broken up and submitted in multiple sequential emails.

The following items shall be delivered under this contract:

Description	**Delivery Date**
Bonds/Insurance/Letter of Credit	15 days after award
Safety Plan	15 days after award
Quality Assurance Plan	15 days after award
Pre-Construction Conference	15 days after award
Construction Schedule	15 days after award
Biographic Data on Personnel and vehicles for access to the job site	5 days prior to commencing work and no less than 48 hours prior to access thereafter
Inspection Reports	3 days after end of weekly period
Payment Request	When the work is completed
Monthly Progress Report	Last day of each month with invoice
Updates to Construction Schedule	Last day of each month with invoice
Shop drawings or drawings of different conditions as built	5 days before Substantial Completion inspection
Material manufacturer's product data sheets, specified tests	5 days before Substantial Completion inspection
Request for Substantial Completion	5 days before Substantial Completion inspection
Warranties	After final completion but before final acceptance
Request for Final Acceptance	5 days before inspection
Notice of Delay	Within 10 days after event

SECTION I - EVALUATION CRITERIA

A. The Government intends to award a contract resulting from this solicitation to the highest technically rated offeror with a fair and reasonable price. Proposals shall include all labor, materials, overhead, profit, expenses, and worker incidentals necessary to complete the project. The Government reserves the right to reject proposals that are unreasonably low or high in price. Unsuccessful offerors will be notified in accordance with FAR 15.5.

B. EVALUATION PROCEDURE:

1) Initial Evaluation: The Government will evaluate all proposals received to ensure that each proposal is complete in terms of submission of each required parts, as specified in Section 1. The Government may reject proposals which are missing a significant amount of the required information.
2) Technical Evaluation: After the Initial Evaluation, the Government will review those proposals remaining for consideration to determine technical acceptability. In determining the acceptability of the technical proposal, the Government will consider responses to the evaluation criteria set forth below in Section 4.

C. AWARD WITHOUT DISCUSSIONS: Award of this contract may be made based on evaluation of proposals without holding discussions, following FAR 52.215-1 and FAR 15.306(a)(3), although we reserve the right to hold discussions with initially qualified contractors with bids in the competitive rage if necessary.

SECTION J – REPRESENTATIONS, CERTIFICATIONS AND OTHER STATEMENTS

52.204-3 TAXPAYER IDENTIFICATION (OCT 1998)

(a) *Definitions*.

Common parent, as used in this provision, means that corporate entity that owns or controls an affiliated group of corporations that files its Federal income tax returns on a consolidated basis, and of which the offeror is a member.

Taxpayer Identification Number (TIN), as used in this provision, means the number required by the IRS to be used by the offeror in reporting income tax and other returns. The TIN may be either a Social Security Number or an Employer Identification Number.

(b) All offerors must submit the information required in paragraphs (d) through (f) of this provision in order to comply with debt collection requirements of 31 U.S.C. 7701(c) and 3325 (d), reporting requirements of 26 USC 6041, 6041A, and 6050M and implementing regulations issued by the Internal Revenue Service (IRS). If the resulting contract is subject to the reporting requirements described in FAR 4.904, the failure or refusal by the offeror to furnish the information may result in a 31 percent reduction of payments otherwise due under the contract.

(c) The TIN may be used by the Government to collect and report on any delinquent amounts arising out of the offeror's relationship with the Government (31 USC 7701 (c) (3)). If the resulting contract is subject to the payment reporting requirements described in FAR 4.904, the TIN provided hereunder may be matched with IRS records to verify the accuracy of the offeror's TIN.

(d) Taxpayer Identification Number (TIN).

- ☐ TIN: _____.
- ☐ TIN has been applied for.
- ☐ TIN is not required because:
- ☐ Offeror is a nonresident alien, foreign corporation, or foreign partnership that does not have income effectively connected with the conduct of a trade or business in the U.S. and does not have an office or place of business or a fiscal paying agent in the U.S.

☐ Offeror is an agency or instrumentality of a foreign government.
☐ Offeror is an agency or instrumentality of the Federal Government.

(e) Type of Organization.
☐ Sole Proprietorship.
☐ Partnership.
☐ Corporate Entity (not tax exempt).
☐ Corporate Entity (tax exempt).
☐ Government Entity (Federal, State, or local).
☐ Foreign Government.
☐ International organization per 26 CFR 1.6049-4.
☐ Other _____.

(f) Common Parent.
☐ Offeror is not owned or controlled by a common parent as defined in paragraph of this clause.
☐ Name and TIN of common parent:
☐ Name _____.
☐ TIN _____.

(End of provision)

52.204-8 ANNUAL REPRESENTATIONS AND CERTIFICATIONS (MAR 2026)

(a) (1) The North American Industry Classification System (NAICS) code for this acquisition is_____ *[insert NAICS code]*.

(2) The small business size standard is _____ *[insert size standard]*.

(3) The small business size standard for a concern that submits an offer, other than on a construction or service acquisition, but proposes to furnish an end item that it did not itself manufacture, process, or produce is 500 employees, or 150 employees for information technology value-added resellers under NAICS code 541519 if the acquisition—

(i) Is set aside for small business and has a value above the simplified acquisition threshold;

(ii) Uses the HUBZone price evaluation preference regardless of

dollar value, unless the offeror waives the price evaluation preference; or

(iii) Is an 8(a), HUBZone, service-disabled veteran-owned, economically disadvantaged women-owned, or women-owned small business set-aside or sole-source award regardless of dollar value.

(b) (1) If the provision at 52.204-7, System for Award Management, is included in this solicitation, paragraph (d) of this provision applies.

(2) If the provision at 52.204-7, System for Award Management, is not included in this solicitation, and the Offeror has an active registration in the System for Award Management (SAM), the Offeror may choose to use paragraph (d) of this provision instead of completing the corresponding individual representations and certifications in the solicitation. The Offeror shall indicate which option applies by checking one of the following boxes:

(i) □ Paragraph (d) applies.

(ii) □ Paragraph (d) does not apply and the offeror has completed the individual representations and certifications in the solicitation.

(c) (1) The following representations or certifications in SAM are applicable to this solicitation as indicated:

(i) 52.203-2, Certificate of Independent Price Determination. This provision applies to solicitations when a firm-fixed-price contract or fixed-price contract with economic price adjustment is contemplated, unless–

(A) The acquisition is to be made under the simplified acquisition procedures in part 13;

(B) The solicitation is a request for technical proposals under two-step sealed bidding procedures; or

(C) The solicitation is for utility services for which rates are set by law or regulation.

(ii) 52.203-11, Certification and Disclosure Regarding Payments to Influence Certain Federal Transactions. This provision applies to solicitations expected to exceed $200,000.

(iii) 52.203-18, Prohibition on Contracting with Entities that Require Certain Internal Confidentiality Agreements or Statements-Representation. This provision applies to all solicitations.

(iv) 52.204-3, Taxpayer Identification. This provision applies to solicitations that do not include the provision at 52.204-7, System

for Award Management.

(v) 52.204-5, Women-Owned Business (Other Than Small Business). This provision applies to solicitations that-
(A) Are not set aside for small business concerns;
(B) Exceed the simplified acquisition threshold; and
(C) Are for contracts that will be performed in the United States or its outlying areas.

(vi) 52.204-26, Covered Telecommunications Equipment or Services-Representation. This provision applies to all solicitations.

(vii) 52.209-2, Prohibition on Contracting with Inverted Domestic Corporations-Representation.

(viii) 52.209-5, Certification Regarding Responsibility Matters. This provision applies to solicitations where the contract value is expected to exceed the simplified acquisition threshold.

(ix) 52.209-11, Representation by Corporations Regarding Delinquent Tax Liability or a Felony Conviction under any Federal Law. This provision applies to all solicitations.

(x) 52.214-14, Place of Performance-Sealed Bidding. This provision applies to invitations for bids except those in which the place of performance is specified by the Government.

(xi) 52.215-6, Place of Performance. This provision applies to solicitations unless the place of performance is specified by the Government.

(xii) 52.219-1, Small Business Program Representations (Basic, Alternates I, and II). This provision applies to solicitations when the contract is for supplies to be delivered or services to be performed in the United States or its outlying areas, or when the contracting officer has applied part 19 in accordance with 19.000(b)(1)(ii).
(A) The basic provision applies when the solicitations are issued by other than DoD, NASA, and the Coast Guard.
(B) The provision with its Alternate I applies to solicitations issued by DoD, NASA, or the Coast Guard.
(C) The provision with its Alternate II applies to solicitations that will result in a multiple-award contract with more than one NAICS code assigned.

(xiii) 52.219-2, Equal Low Bids. This provision applies to solicitations when contracting by sealed bidding and the contract is for supplies to be delivered or services to be performed in the United States or its outlying areas, or when the contracting

officer has applied part 19 in accordance with 19.000(b)(1)(ii).

(xiv) 52.222-22, Previous Contracts and Compliance Reports. This provision applies to solicitations that include the clause at 52.222-26, Equal Opportunity.

(xv) 52.222-25, Affirmative Action Compliance. This provision applies to solicitations, other than those for construction, when the solicitation includes the clause at 52.222-26, Equal Opportunity.

(xvi) 52.222-38, Compliance with Veterans' Employment Reporting Requirements. This provision applies to solicitations when it is anticipated the contract award will exceed the simplified acquisition threshold and the contract is not for acquisition of commercial products or commercial services.

(xvii) 52.223-1, Biobased Product Certification. This provision applies to solicitations that require the delivery or specify the use of biobased products in USDA-designated product categories; or include the clause at 52.223-2, Reporting of Biobased Products Under Service and Construction Contracts.

(xviii) 52.223-4, Recovered Material Certification. This provision applies to solicitations that are for, or specify the use of, EPA–designated items.

(xix) 52.223-22, Public Disclosure of Greenhouse Gas Emissions and Reduction Goals-Representation. This provision applies to solicitations that include the provision at 52.204-7.

(xx) 52.225-2, Buy American Certificate. This provision applies to solicitations containing the clause at 52.225-1.

(xxi) 52.225-4, Buy American-Free Trade Agreements-Israeli Trade Act Certificate. (Basic, Alternates II and III.) This provision applies to solicitations containing the clause at 52.225-3.

(A) If the acquisition value is less than $50,000, the basic provision applies.

(B) If the acquisition value is $50,000 or more but is less than $100,000, the provision with its Alternate II applies.

(C) If the acquisition value is $100,000 or more but is less than $105,767, the provision with its Alternate III applies.

(xxii) 52.225-6, Trade Agreements Certificate. This provision applies to solicitations containing the clause at 52.225-5.

(xxiii) 52.225-20, Prohibition on Conducting Restricted Business Operations in Sudan-Certification. This provision applies to all solicitations.

(xxiv) 52.225-25, Prohibition on Contracting with Entities Engaging in Certain Activities or Transactions Relating to Iran-Representation and Certifications. This provision applies to all solicitations.

(xxv) 52.226-2, Historically Black College or University and Minority Institution Representation. This provision applies to solicitations for research, studies, supplies, or services of the type normally acquired from higher educational institutions.

(2) The following representations or certifications are applicable as indicated by the Contracting Officer:
[*Contracting Officer check as appropriate.*]
__ (i) 52.204-17, Ownership or Control of Offeror.
__ (ii) 52.204-20, Predecessor of Offeror.
__ (iii) 52.222-18, Certification Regarding Knowledge of Child Labor for Listed End Products.
__ (iv) 52.222-48, Exemption from Application of the Service Contract Labor Standards to Contracts for Maintenance, Calibration, or Repair of Certain Equipment- Certification.
__ (v) 52.222-52, Exemption from Application of the Service Contract Labor Standards to Contracts for Certain Services-Certification.
__ (vi) 52.227-6, Royalty Information.
__ (A) Basic.
__ (B) Alternate I.
__ (vii) 52.227-15, Representation of Limited Rights Data and Restricted Computer Software.

(d) The offeror has completed the annual representations and certifications electronically in SAM website accessed through https://www.sam.gov. After reviewing the SAM information, the offeror verifies by submission of the offer that the representations and certifications currently posted electronically that apply to this solicitation as indicated in paragraph (c) of this provision have been entered or updated within the last 12 months, are current, accurate, complete, and applicable to this solicitation (including the business size standard applicable to the NAICS code referenced for this solicitation), as of the date of this offer and are incorporated in this offer by reference (see FAR 4.1201); except for the changes identified below [*offeror to insert changes, identifying change by clause number, title, date*]. These amended representation(s) and/or certification(s) are also

incorporated in this offer and are current, accurate, and complete as of the date of this offer.

FAR Clause #	Title	Date	Change

Any changes provided by the offeror are applicable to this solicitation only, and do not result in an update to the representations and certifications posted on SAM.

(End of provision)

Alternate I (Mar 2023). As prescribed in 4.1202(a) , substitute the following paragraph (a) for paragraph (a) of the basic provision:
(a)(1) The North American Industry Classification System (NAICS) codes and corresponding size standards for this acquisition are as follows; the categories or portions these NAICS codes are assigned to are specified elsewhere in the solicitation:

NAICS Code	**Size standard**

[*Contracting Officer to insert NAICS codes and size standards*].

(2) The small business size standard for a concern that submits an offer, other than on a construction or service acquisition, but proposes to furnish an end item that it did not itself manufacture, process, or produce, (i.e., nonmanufacturer), is 500 employees, or 150 employees for information technology value-added resellers under NAICS code

541519, if the acquisition—

(i) Is set aside for small business and has a value above the simplified acquisition threshold;

(ii) Uses the HUBZone price evaluation preference regardless of dollar value, unless the offeror waives the price evaluation preference; or

(iii) Is an 8(a), HUBZone, service-disabled veteran-owned, economically disadvantaged women-owned, or women-owned small business set-aside or sole-source award regardless of dollar value.

52.204–24 REPRESENTATION REGARDING CERTAIN TELECOMMUNICATIONS AND VIDEO SURVEILLANCE SERVICES OR EQUIPMENT (NOV 2021)

The Offeror shall not complete the representation at paragraph (d)(1) of this provision if the Offeror has represented that it "does not provide covered telecommunications equipment or services as a part of its offered products or services to the Government in the performance of any contract, subcontract, or other contractual instrument" in paragraph (c)(1) in the provision at 52.204-26, Covered Telecommunications Equipment or Services—Representation, or in paragraph (v)(2)(i) of the provision at 52.212-3, Offeror Representations and Certifications-Commercial Products or Commercial Services. The Offeror shall not complete the representation in paragraph (d)(2) of this provision if the Offeror has represented that it "does not use covered telecommunications equipment or services, or any equipment, system, or service that uses covered telecommunications equipment or services" in paragraph (c)(2) of the provision at 52.204-26, or in paragraph (v)(2)(ii) of the provision at 52.212-3.

(a) *Definitions.* As used in this provision—

Backhaul, covered telecommunications equipment or services, critical technology, interconnection arrangements, reasonable inquiry, roaming, and substantial or essential component have the meanings provided in the clause 52.204-25, Prohibition on Contracting for Certain Telecommunications and Video Surveillance Services or Equipment.

(b) *Prohibition.*

(1) Section 889(a)(1)(A) of the John S. McCain National Defense Authorization Act for Fiscal Year 2019 (Pub. L. 115-232) prohibits the head of an executive agency on or after August 13, 2019, from procuring or obtaining, or extending or renewing a contract to procure or obtain, any equipment, system, or service that uses covered telecommunications equipment or services as a substantial or essential component of any system, or as critical technology as part of any system. Nothing in the prohibition shall be construed to—

(i) Prohibit the head of an executive agency from procuring with an entity to provide a service that connects to the facilities of a third-party, such as backhaul, roaming, or interconnection arrangements; or

(ii) Cover telecommunications equipment that cannot route or redirect user data traffic or cannot permit visibility into any user data or packets that such equipment transmits or otherwise handles.

(2) Section 889(a)(1)(B) of the John S. McCain National Defense Authorization Act for Fiscal Year 2019 (Pub. L. 115-232) prohibits the head of an executive agency on or after August 13, 2020, from entering into a contract or extending or renewing a contract with an entity that uses any equipment, system, or service that uses covered telecommunications equipment or services as a substantial or essential component of any system, or as critical technology as part of any system. This prohibition applies to the use of covered telecommunications equipment or services, regardless of whether that use is in performance of work under a Federal contract. Nothing in the prohibition shall be construed to—

(i) Prohibit the head of an executive agency from procuring with an entity to provide a service that connects to the facilities of a third-party, such as backhaul, roaming, or interconnection arrangements; or

(ii) Cover telecommunications equipment that cannot route or redirect user data traffic or cannot permit visibility into any user data or packets that such equipment transmits or otherwise handles.

(c) *Procedures.* The Offeror shall review the list of excluded parties in the System for Award Management (SAM) (https://www.sam.gov) for entities excluded from receiving federal awards for "covered telecommunications

equipment or services".

(d) *Representation.* The Offeror represents that—

(1) It □ will, □ will not provide covered telecommunications equipment or services to the Government in the performance of any contract, subcontract or other contractual instrument resulting from this solicitation. The Offeror shall provide the additional disclosure information required at paragraph (e)(1) of this section if the Offeror responds "will" in paragraph (d)(1) of this section; and

(2) After conducting a reasonable inquiry, for purposes of this representation, the Offeror represents that—

It □ does, □ does not use covered telecommunications equipment or services, or use any equipment, system, or service that uses covered telecommunications equipment or services. The Offeror shall provide the additional disclosure information required at paragraph (e)(2) of this section if the Offeror responds "does" in paragraph (d)(2) of this section.

(e) *Disclosures.*

(1) Disclosure for the representation in paragraph (d)(1) of this provision. If the Offeror has responded "will" in the representation in paragraph (d)(1) of this provision, the Offeror shall provide the following information as part of the offer:

(i) For covered equipment—

(A) The entity that produced the covered telecommunications equipment (include entity name, unique entity identifier, CAGE code, and whether the entity was the original equipment manufacturer (OEM) or a distributor, if known);

(B) A description of all covered telecommunications equipment offered (include brand; model number, such as OEM number, manufacturer part number, or wholesaler number; and item description, as applicable); and

(C) Explanation of the proposed use of covered telecommunications equipment and any factors relevant to determining if such use would be permissible under the prohibition in paragraph (b)(1) of this provision.

(ii) For covered services—

(A) If the service is related to item maintenance: A description of all covered telecommunications services offered (include on the item being maintained: Brand; model number, such as OEM number, manufacturer part number, or wholesaler

number; and item description, as applicable); or

(B) If not associated with maintenance, the Product Service Code (PSC) of the service being provided; and explanation of the proposed use of covered telecommunications services and any factors relevant to determining if such use would be permissible under the prohibition in paragraph (b)(1) of this provision.

(2) Disclosure for the representation in paragraph (d)(2) of this provision. If the Offeror has responded "does" in the representation in paragraph (d)(2) of this provision, the Offeror shall provide the following information as part of the offer:

(iii) For covered equipment—

(A) The entity that produced the covered telecommunications equipment (include entity name, unique entity identifier, CAGE code, and whether the entity was the OEM or a distributor, if known);

(B) A description of all covered telecommunications equipment offered (include brand; model number, such as OEM number, manufacturer part number, or wholesaler number; and item description, as applicable); and

(C) Explanation of the proposed use of covered telecommunications equipment and any factors relevant to determining if such use would be permissible under the prohibition in paragraph (b)(2) of this provision.

(iv) For covered services—

(A) If the service is related to item maintenance: A description of all covered telecommunications services offered (include on the item being maintained: Brand; model number, such as OEM number, manufacturer part number, or wholesaler number; and item description, as applicable); or

(B) If not associated with maintenance, the PSC of the service being provided; and explanation of the proposed use of covered telecommunications services and any factors relevant to determining if such use would be permissible under the prohibition in paragraph (b)(2) of this provision.

(End of provision)

52.204-26 COVERED TELECOMMUNICATIONS EQUIPMENT OR SERVICES-REPRESENTATION (OCT 2020)

(a) *Definitions.* As used in this provision, "covered telecommunications equipment or services" and "reasonable inquiry" have the meaning provided in the clause 52.204-25, Prohibition on Contracting for Certain Telecommunications and Video Surveillance Services or Equipment.

(b) *Procedures.* The Offeror shall review the list of excluded parties in the System for Award Management (SAM) (*https://www.sam.gov*) for entities excluded from receiving federal awards for "covered telecommunications equipment or services".

(c) *Representations.* (1) The Offeror represents that it [ ] does, [ ] does not provide covered telecommunications equipment or services as a part of its offered products or services to the Government in the performance of any contract, subcontract, or other contractual instrument.

(2) After conducting a reasonable inquiry for purposes of this representation, the Offeror represents that it [ ] does, [ ] does not use covered telecommunications equipment or services, or any equipment, system, or service that uses covered telecommunications equipment or services.

(End of Provision)

52.209-2 PROHIBITION ON CONTRACTING WITH INVERTED DOMESTIC CORPORATIONS' REPRESENTATION (NOV 2015)

(a) *Definitions*. "Inverted domestic corporation" and "subsidiary" have the meaning given in the clause of this contract entitled Prohibition on Contracting with Inverted Domestic Corporations (52.209-10).

(b) Government agencies are not permitted to use appropriated (or otherwise made available) funds for contracts with either an inverted domestic corporation, or a subsidiary of an inverted domestic corporation, unless the exception at 9.108-2(b) applies or the requirement is waived in accordance with the procedures at 9.108-4.

(c) *Representation*. The Offeror represents that-

(1) It □ is, □ is not an inverted domestic corporation; and

(2) It □ is, □ is not a subsidiary of an inverted domestic corporation.

(End of provision)

AUTHORIZED CONTRACTOR ADMINISTRATOR

If the offeror does not fill-in the blanks below, the official who signed the offer will be deemed to be the offeror's representative for Contract Administration, which includes all matters pertaining to payments.

Name:
Telephone Number:
Address:

52.225-20 PROHIBITION ON CONDUCTING RESTRICTED BUSINESS OPERATIONS IN SUDAN – CERTIFICATION (AUG 2009)

(a) *Definitions*. As used in this provision—

Business operations means engaging in commerce in any form, including by acquiring, developing, maintaining, owning, selling, possessing, leasing, or operating equipment, facilities, personnel, products, services, personal property, real property, or any other apparatus of business or commerce.

Marginalized populations of Sudan means —

(1) Adversely affected groups in regions authorized to receive assistance under section 8(c) of the Darfur Peace and Accountability Act (Pub. L. 109-344) (50 U.S.C. 1701 note); and

(2) Marginalized areas in Northern Sudan described in section 4(9) of such Act.

Restricted business operations means business operations in Sudan that include power production activities, mineral extraction activities, oil-related activities, or the production of military equipment, as those terms are defined in the Sudan

Accountability and Divestment Act of 2007 (Pub. L. 110-174). Restricted business operations do not include business operations that the person conducting the business can demonstrate—

(1) Are conducted under contract directly and exclusively with the regional government of southern Sudan;
(2) Are conducted pursuant to specific authorization from the Office of Foreign Assets Control in the Department of the Treasury, or are expressly exempted under Federal law from the requirement to be conducted under such authorization;
(3) Consist of providing goods or services to marginalized populations of Sudan;
(4) Consist of providing goods or services to an internationally recognized peacekeeping force or humanitarian organization;
(5) Consist of providing goods or services that are used only to promote health or education; or
(6) Have been voluntarily suspended.

(b) *Certification*. By submission of its offer, the offeror certifies that it does not conduct any restricted business operations in Sudan.

52.225-25 PROHIBITION ON CONTRACTING WITH ENTITIES ENGAGING IN CERTAIN ACTIVITIES OR TRANSACTIONS RELATING TO IRAN—REPRESENTATION AND CERTIFICATIONS (JUN 2020).

(a) *Definitions*. As used in this provision-

Person—

(1) Means–
  (i) A natural person;
  (ii) A corporation, business association, partnership, society, trust, financial institution, insurer, underwriter, guarantor, and any other business organization, any other nongovernmental entity, organization, or group, and any governmental entity operating as a business enterprise; and
  (iii) Any successor to any entity described in paragraph (1)(ii) of this definition; and
(2) Does not include a government or governmental entity that is not operating as a business enterprise.

Sensitive technology-

(1) Means hardware, software, telecommunications equipment, or any other technology that is to be used specifically-
   (i) To restrict the free flow of unbiased information in Iran; or
   (ii) To disrupt, monitor, or otherwise restrict speech of the people of Iran; and

(2) Does not include information or informational materials the export of which the President does not have the authority to regulate or prohibit pursuant to section 203(b)(3) of the International Emergency Economic Powers Act (50 U.S.C. 1702(b)(3)).

(b) The offeror shall e-mail questions concerning sensitive technology to the Department of State at CISADA106@state.gov.

(c) Except as provided in paragraph (d) of this provision or if a waiver has been granted in accordance with Federal Acquisition Regulation (FAR) 25.703-4, by submission of its offer, the offeror—

(1) Represents, to the best of its knowledge and belief, that the offeror does not export any sensitive technology to the government of Iran or any entities or individuals owned or controlled by, or acting on behalf or at the direction of, the government of Iran;

(2) Certifies that the offeror, or any person owned or controlled by the offeror, does not engage in any activities for which sanctions may be imposed under section 5 of the Iran Sanctions Act. These sanctioned activities are in the areas of development of the petroleum resources of Iran, production of refined petroleum products in Iran, sale and provision of refined petroleum products to Iran, and contributing to Iran's ability to acquire or develop certain weapons or technologies; and

(3) Certifies that the offeror, and any person owned or controlled by the offeror, does not knowingly engage in any transaction that exceeds the threshold at FAR 25.703-2(a)(2) with Iran's Revolutionary Guard Corps or any of its officials, agents, or affiliates, the property and interests in property of which are blocked pursuant to the International Emergency Economic Powers Act (50 U.S.C. 1701 et seq.) (see OFAC's Specially Designated Nationals and Blocked Persons List at https://www.treasury.gov/resource-

center/sanctions/SDN-List/Pages/default.aspx).

(d) Exception for trade agreements. The representation requirement of paragraph (c)(1) and the certification requirements of paragraphs (c)(2) and (c)(3) of this provision do not apply if-

(1) This solicitation includes a trade agreements notice or certification (*e.g.*, 52.225-4, 52.225-6, 52.225-12, 52.225-24, or comparable agency provision); and

(2) The offeror has certified that all the offered products to be supplied are designated country end products or designated country construction material.

(End of provision)