NPS PMIS No.: 335141, NPS Drawing No.: OLYM 149/198715

PROJECT	SHEET NUMBER
WA NP OLYM 12(8)	A.1

U. S. DEPARTMENT OF THE INTERIOR
NATIONAL PARK SERVICE
OLYMPIC NATIONAL PARK

PLANS FOR PROPOSED PROJECT

WA NP OLYM 12(8)
NPS PMIS NO. 335141

HURRICANE RIDGE
ROCKFALL MITIGATION MP 9.4

CLALLAM COUNTY
WASHINGTON
LENGTH 0.04 MILES

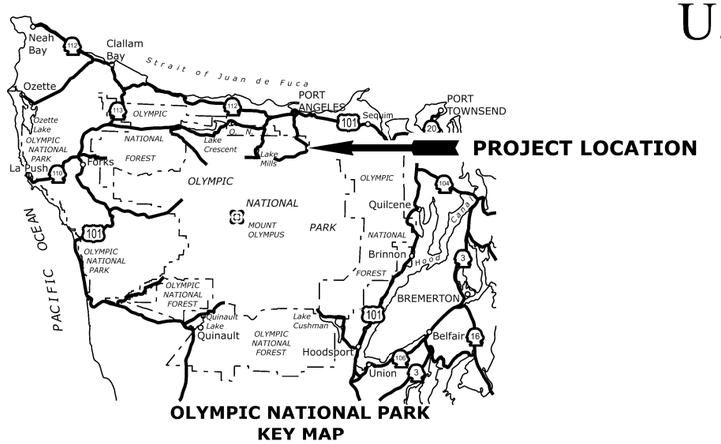

OLYMPIC NATIONAL PARK
KEY MAP

SECTION INDEX

A. GENERAL INFORMATION
B. SUMMARY OF QUANTITIES
C. TYPICAL SECTIONS
D. PLAN-PROFILE
E. EROSION CONTROL
F. DRAINAGE
G. WALLS
H. ROCKFALL MITIGATION FENCE
I. TEMPORARY TRAFFIC CONTROL PLAN
J. PERMANENT TRAFFIC CONTROL PLAN

See Sheet A.2 for complete Sheet Index.

WORLD HERITAGE SITE

TYPE OF CONSTRUCTION:

Rockfall mitigation, soil nail wall, culvert, maintenance access.

DESIGN DESIGNATION:

ADT (2026)	*<900*
ADT (2046)	*<1200*
V	*35 MPH*
e (max)	*Not Applicable*

SPECIFICATION:

Standard Specifications for Construction of Roads and Bridges on Federal Highway Projects, FP-24

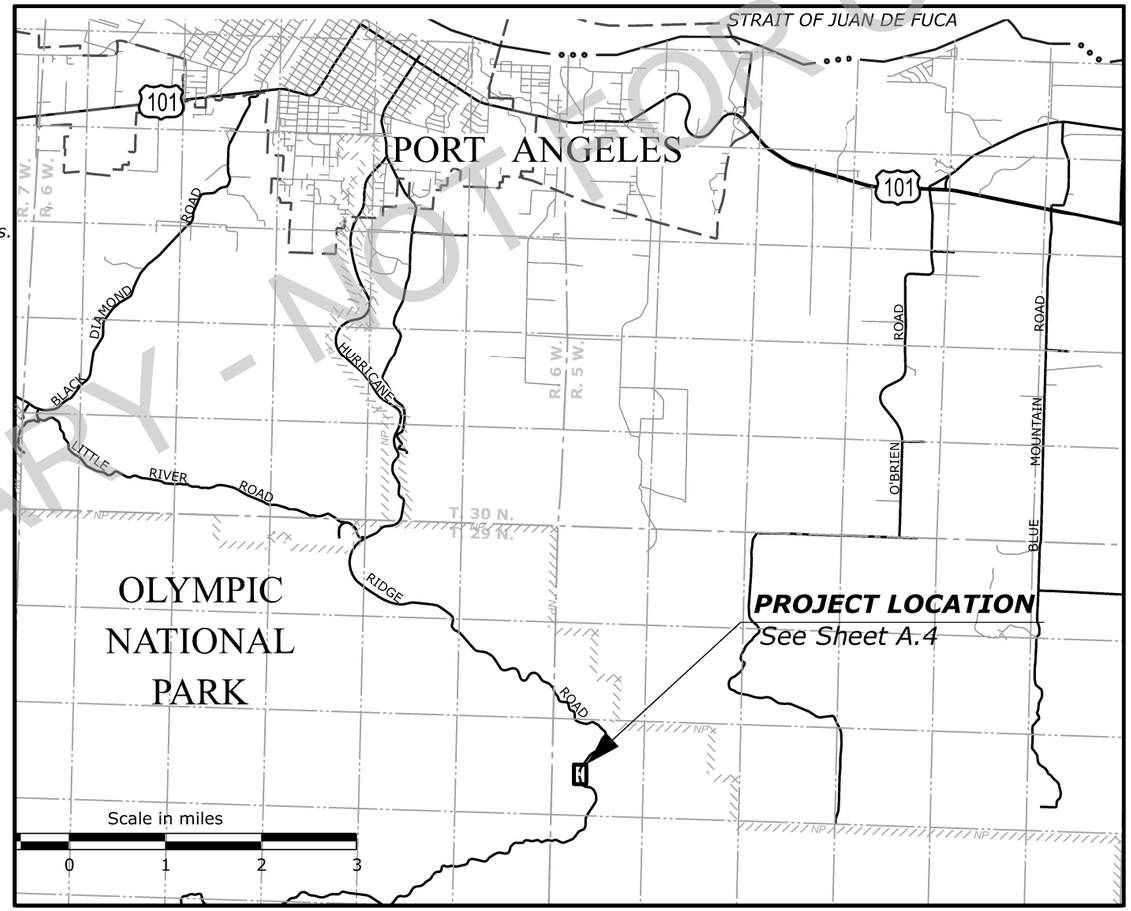

PLANS PREPARED BY

U.S. DEPARTMENT OF TRANSPORTATION
FEDERAL HIGHWAY ADMINISTRATION
WESTERN FEDERAL LANDS HIGHWAY DIVISION
VANCOUVER, WASHINGTON

PROJECT MANAGER
J. DAVIS

APPROVED:

Chief of Engineering, Western Federal Lands Highway Division — *DATE*

Associate Regional Director, National Park Service, NPS Interior Regions 8, 9, 10 & 12 — *DATE*

RECOMMENDED:

Park Superintendent, Olympic National Park — *DATE*

PRELIMINARY - NOT FOR CONSTRUCTION

c:\pw_workdir\jacobs-amer-transp\d0311255\wa-olym01208_aa.dgn [Title Sheet]
30 June 2026 9:07 AM

PROJECT	SHEET NUMBER
WA NP OLYM 12(8)	A.2

SHEET INDEX

A. GENERAL INFORMATION
A.1 TITLE SHEET
A.2 SHEET INDEX
A.3 PLAN SYMBOLS AND ABBREVIATIONS
A.4 VICINITY MAP

B. SUMMARY OF QUANTITIES
B.1 SUMMARY OF QUANTITIES

C. TYPICAL SECTIONS
C.1 ROCKFALL MITIGATION AND MAINTENANCE ROAD TYPICAL SECTION

D. PLAN-PROFILE
D.1 TABULATION OF PLAN QUANTITIES
D.2 ROCKFALL MITIGATION SITE PLAN
D.3 MAINTENANCE ROAD PLAN-PROFILE

E. EROSION CONTROL
E.1 TABULATION OF EROSION CONTROL QUANTITIES
E.2 STANDARD DETAIL

F. DRAINAGE
F.1 TABULATION OF DRAINAGE QUANTITIES
F.2-7 STANDARD DRAWINGS

G. WALLS
G.1 TABULATION OF WALL QUANTITIES
G.2 SOIL NAIL RETAINING WALL PLAN-PROFILE
G.3-5 STANDARD DRAWINGS AND DETAILS

H. ROCKFALL MITIGATION FENCE
H.1 ROCKFALL PROTECTION FENCE SECTION AND DETAILS

I. TEMPORARY TRAFFIC CONTROL PLAN
I.1 TABULATION OF TEMPORARY TRAFFIC CONTROL QUANTITIES
I.2 TEMPORARY TRAFFIC CONTROL PLAN
I.3-6 STANDARD DRAWINGS

J. PERMANENT TRAFFIC CONTROL PLAN
J.1 TABULATION OF PERMANENT TRAFFIC CONTROL QUANTITIES
J.2 PERMANENT TRAFFIC CONTROL PLAN
J.3-5 PERMANENT TRAFFIC CONTROL SIGN DETAILS
J.6-7 CONCRETE BARRIER TYPE F (PRECAST)
J.8 CONCRETE BARRIER TERMINAL TYPE F (PRECAST) TERMINAL

PRELIMINARY - NOT FOR CONSTRUCTION

c:\pw_workdir\jacobs-amer-transp\d0311255\wa-olym01208_aa.dgn [Sheet Index]
6 July 2026 4:49 PM

SHEET INDEX

PROJECT	SHEET NUMBER
WA NP OLYM 12(8)	A.3

Δ	total central angle
Δc	curve central angle
Ø	diameter
θs	spiral central angle
abut.	abutment
ADT	average daily traffic
AH	ahead
appr.	approach
BK	back
b.f.	back face
BM	bench mark
BP	balance point
br.	bridge
brg.	bearing
btwn	between
cc or c. to c.	center to center
℄	centerline
clr.	clear
CMP	corrugated metal pipe
col.	column
conc.	concrete
conn.	connection
constr. jt.	construction joint
cont.	continuous
CS	point of curve to spiral
ctrs.	centers
CUFT	cubic foot (feet)
culv.	culvert
CUYD	cubic yard(s)
D	diameter
DHV	design hourly volume
dia.	diameter
diaph.	diaphragm
dist.	distance
drwg(s).	drawing(s)
E	east
e	superelevation rate
e.f.	each face
El. 94.16	elevation in feet
elev.	elevation
emb.	embankment
EOP	edge of pavement
EQ or eq.	equation
EW	edge of water
exc.	excavation
exp. jt.	expansion joint
f.f.	front face
fin.	finish
flg.	flange
ftg.	footing
ga.	gage (gauge)
galv.	galvanized
ID	inside diameter
IE	invert elevation
jt.	joint
KSI	thousand pounds per square inch
L	length of curve
lat.	latitude
LNFT	linear foot (feet)
long.	longitudinal
LPSM	lump sum
Ls	length of spiral
lt. or LT	left
LW	low water

M.L.	main line
M.P.	mile post
matl.	material
max.	maximum
MGAL	thousand gallon
min.	minimum
mon.	monument
N	north
NC	normal crown
o.c.	on center
o. to o.	out to out
OD	outside diameter
OG	original ground
OHWM	ordinary high water mark
PC	point of curve
PCC	point of compound curve
PCS	point of curve to spiral
PI	point of intersection
pl.	plate
POC	point on curve
POS	point on spiral
POT	point on tangent
PS	point of tangent to spiral
PSF	pounds per square foot
PSI	pounds per square inch
PSC	point of spiral to curve
PST	point of spiral to tangent
PT	point of tangent
pvmt.	pavement
R	radius
R.	range
R/W	right-of-way
rdwy.	roadway
reinf.	reinforcement
reqd.	required
rt. or RT	right
rte.	route
S	south
SADT	seasonal average daily traffic
SC	point of spiral to curve
sect.	section
shldr.	shoulder
SLRY	slurry unit
spa.	spacing, spaces or spaced
SQFT	square foot
SQYD	square yard
SRS	point of spiral to reverse spiral
SS	point of spiral to spiral (no curve)
ST	point of spiral to tangent
STA, Sta.	station
std.	standard
stgr.	stringer
stiff.	stiffener
struc.	structural
STS	point of spiral to tangent spiral
T	tangent distance
T.	township
TBM	temporary bench mark
thd.	thread
TS	point of tangent to spiral
Ts	tangent distance (spiraled curve)
typ.	typical
V	design speed (velocity)
vph	vehicles per hour
VPI	vertical point of intersection
W	west

NOTE:

1. Other symbols used in the plans will be shown in a legend on the appropriate plan sheet.

National Boundary

State Boundary

County Boundary

City Boundary

Township or Range Line

Section Line

Section Corner (Found, Projected)

¼ Section Line

¼ Section Corner (Found, Projected)

1/16 Section Line

1/16 Section Corner (Found, Projected)

Property Line

Parcel Number

National Park Boundary

National Forest Boundary

National Wildlife Refuge Boundary

BLM Lands Boundary

Indian Reservation Boundary

Existing Roadway (Paved, Gravel)

Railroad

Trail

Fiber Roll

Silt Fence

Sandbag

Intermittent Drainage or Small Creek

Large Creek or River

Lake, Pond or Reservoir; Marshland

Spring or Seep

Treeline; Individual Trees

Material Source; Bore Hole; Test Pit

Spot Elevation; Coordinate Grid Tick

Above Ground Tank; Underground Tank

Boulder; Well; Antenna; Grave

Cooking Grate; Garbage Can; Picnic Table

Flagpole; Fire Hydrant

Gas & Water Meter; Gas & Water Valve

Control Point (Terrestrial and GPS)

	EXISTING	PROPOSED
North Arrow	N	
Slope Stake Limits	Top of Cut / Toe of Fill	
Construction Limits	- no symbol -	
Bottom of Ditch		
Fence		
Gate with Fence		
Cattleguard		
Guardrail		
Concrete Barrier and Guard Wall		
Retaining Wall		wall face
Signs (single, double post; portable)		
Delineators		
Pipe Culvert (arrow shows flow)		
Pipe Culvert with End Section		
Pipe Culvert with Headwall		
Pipe Culvert with Drop Inlet	DI	DI
Box Culvert		
Underdrain	UD	UD
Overhead/Above Ground Utilities	P	P
Underground Utilities	W	W

FM = force main, FO = fiber optic, G = gas, IRR = irrigation, O = oil, P = power, SA = sanitary sewer, SD = storm drain, SS = storm sewer, STEAM = steam, T = telephone, TV = CATV, W = water

Poles (Power, Telephone, Joint Use, Light, Support w/Anchor)

Miscellaneous Utility Features (TP)

EM = electric meter, TP = telephone pedestal, TV = CATV pedestal, UP = transformer or junction box, WF = water fountain

Building		
Right-of-Way Line	r/w	R/W
Permanent Easement	P/E	P/E
Construction Easement	- no symbol -	TCE
Riprap	Section A-A	A A

NO SCALE

U.S. DEPARTMENT OF TRANSPORTATION, FHWA
OFFICE OF FEDERAL LANDS HIGHWAY

PLAN SYMBOLS AND ABBREVIATIONS

WFLHD DETAIL W101-1

SPECIFICATION

APPROVED FOR USE 6/2022

PRELIMINARY - NOT FOR CONSTRUCTION

c:\pw-work\d0464322\W101-1.dgn [Det W101-1]
9 October 2025 2:54 PM

NPS PMIS No.: 335141, NPS Drawing No.: OLYM 149/198715

PROJECT	SHEET NUMBER
WA NP OLYM 12(8)	A.4

LITTLE RIVER ROAD

LAKE DAWN RD.

PORT ANGELES ±10 MILES

T. 30 N.
T. 29 N.

R. 6 W.
R. 5 W.

GLASS ROAD

LITTLE OKLAHOMA ±2 MILES

N

Heart o' the Hills Entrance Station

Heart o' the Hills Campground Entrance Station Road

Existing Road Gate

OLYMPIC

HURRICANE RIDGE ROAD

Lake Creek

Rocky Creek

NATIONAL

PARK

DEER PARK ROAD

Hurricane Ridge Road Tunnel

Morse Creek Overlook

PROJECT LOCATION
MP 9.4

Hurricane Ridge Road Tunnel

Morse Creek

HURRICANE RIDGE SKI AREA ±6.5 MILES

1 2 3 4 5 6 7 8 9 10 11 12 13 14 15 16 17 18

NP

Scale in miles
0 1/4 1/2 1

VICINITY MAP

PRELIMINARY - NOT FOR CONSTRUCTION

c:\pw_workdir\jacobs-amer-transp\d0311295\wa-olym01208_aa.dgn [Vicinity Map]
11 June 2026 9:43 AM

PROJECT	SHEET NUMBER
WA NP OLYM 12(8)	C.1

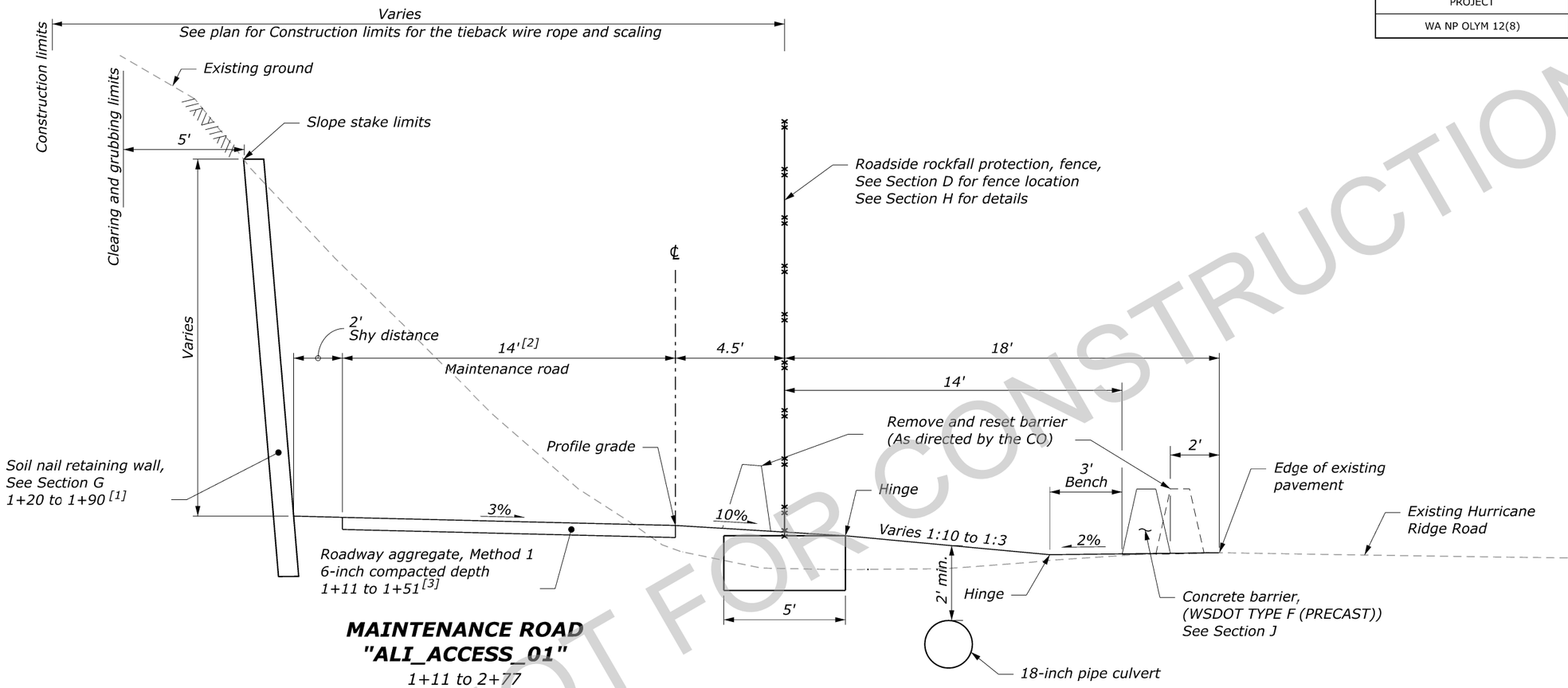

MAINTENANCE ROAD
"ALI_ACCESS_01"
1+11 to 2+77

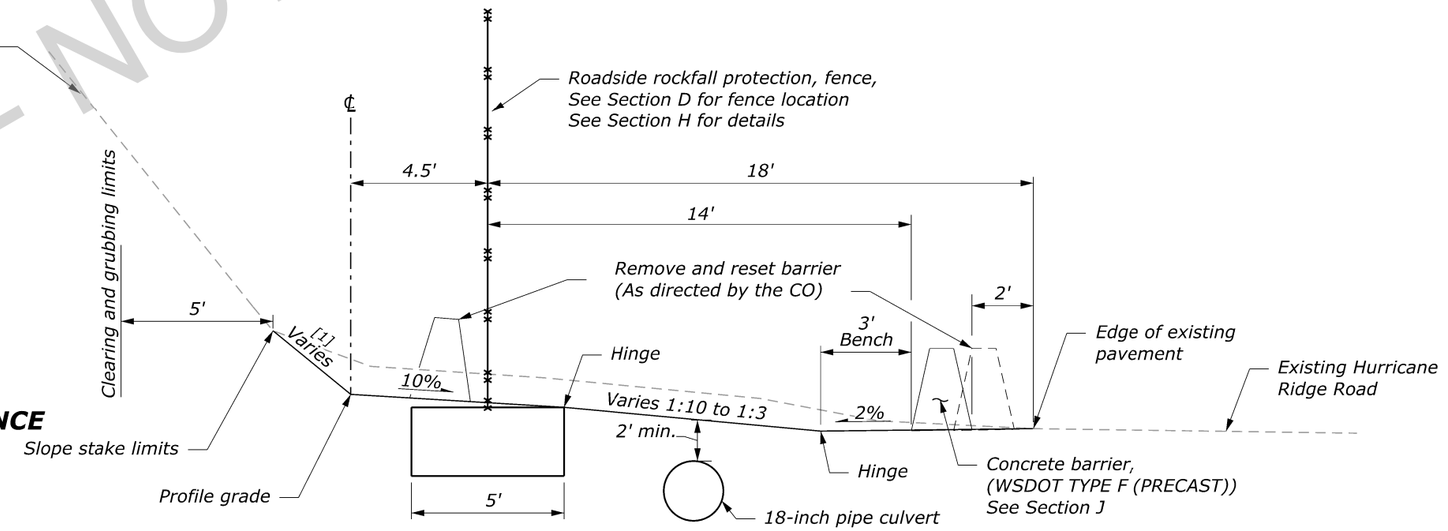

GRADING FOR ROADSIDE ROCKFALL PROTECTION, FENCE
"ALI_ACCESS_01"
2+77 TO 3+07

NOTE:

1. *Provide minimum of 15' vertical clearance on the maintenance road under the tieback ropes for the roadside rockfall protection, fence.*
2. *Do not remove tree or vegetation above the top of the soil nail wall unless necessary to install tieback wire rope anchors for Roadside Rockfall Protection, fence in coordination with the CO.*

FOOTNOTE:

[1] See cross sections and staking reports for proposed slopes outside of Soil nail wall limits.
[2] Transition Maintenance road width to 11' from 2+58 to 2+77.
[3] Grade Maintenance road from 1+51 to 2+77. See Cross sections for details.

ROCKFALL MITIGATION AND MAINTENANCE ROAD TYPICAL SECTION

PRELIMINARY - NOT FOR CONSTRUCTION

30 June 2026 9:34 AM c:\pw_workdir\jacobs-amer-transp\d0311259\WA-OLYM01208_ca1.dgn [NF TYPICAL SECTION]

NPS PMIS No.: 335141, NPS Drawing No.: OLYM 149/198715

PROJECT	SHEET NUMBER
WA NP OLYM 12(8)	D.2

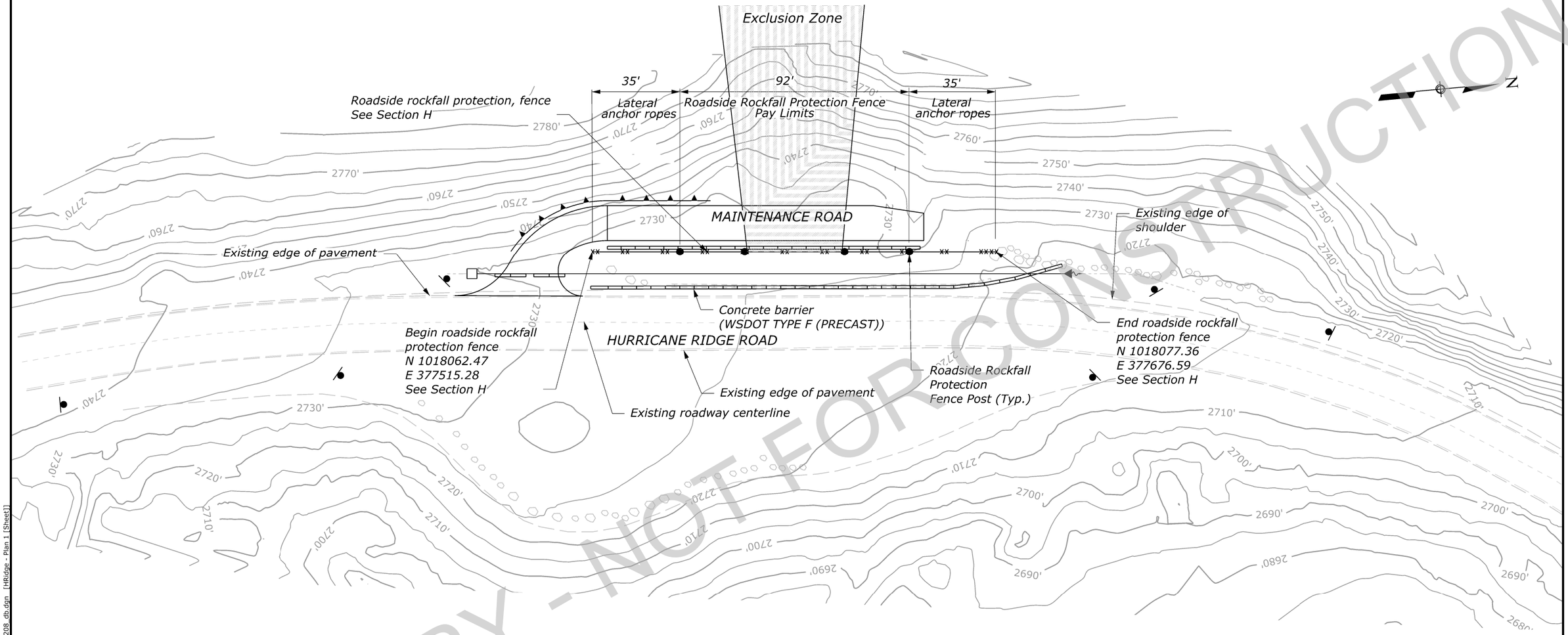

Note:

1. Roadside rockfall protection fence post locations are approximate. Confirm post locations with the CO prior to installation.

2. Do not install posts or tieback anchor ropes in the exclusion zone. Do not install tieback anchor ropes in the soil nail wall. Do not install lateral anchor ropes in the maintenance road.

Scale in feet

0 20 40 80

ROCKFALL MITIGATION SITE PLAN

PRELIMINARY - NOT FOR CONSTRUCTION

30 June 2026 10:18 AM c:\pw_workdir\jacobs-amer-transp\d0311260\wa-olym01208_db.dgn [HRidge - Plan 1 [Sheet]]

PROJECT	SHEET NUMBER
WA NP OLYM 12(8)	D.3

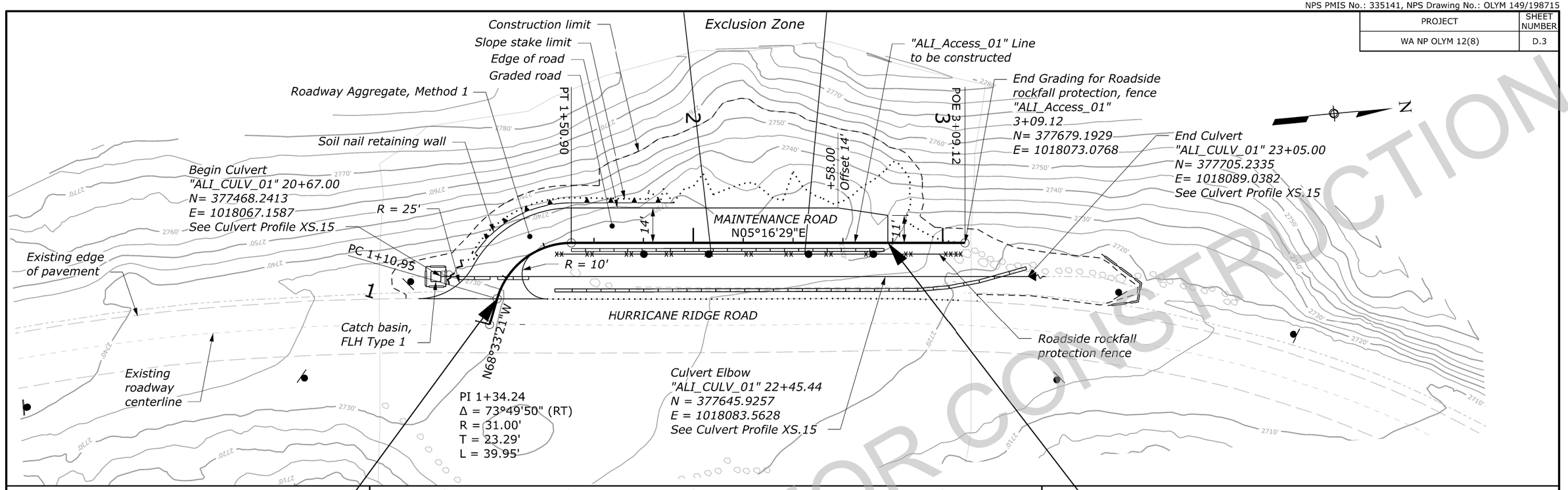

BEGIN MAINTENANCE ROAD CONSTRUCTION

"ALI_Access_01" 1+10.95
N = 377489.9311
E = 1018078.0660
EL. = 2730.17

END MAINTENANCE ROAD CONSTRUCTION

"ALI_Access_01" 2+77.00
BEGIN GRADING FOR ROADSIDE ROCKFALL PROTECTION, FENCE
N = 377647.1994
E = 1018070.1231
EL. = 2724.70

NOTE:
1. See Section G for Soil nail wall detail.
2. See Section H for Roadside rockfall protection, fence details.
3. See Section J for concrete barrier and proposed sign details.

Legend:
Fiber roll

MAINTENANCE ROAD PLAN-PROFILE

PRELIMINARY - NOT FOR CONSTRUCTION

c:\pw_workdir\jacobs-amer-transp\d0311260\wa-olym01208_pln_pp_access_01.dgn [ALI_Access_01 - Plan 1 [Sheet]]
30 June 2026 10:30 AM

PROJECT	SHEET NUMBER
WA NP OLYM 12(8)	E.2

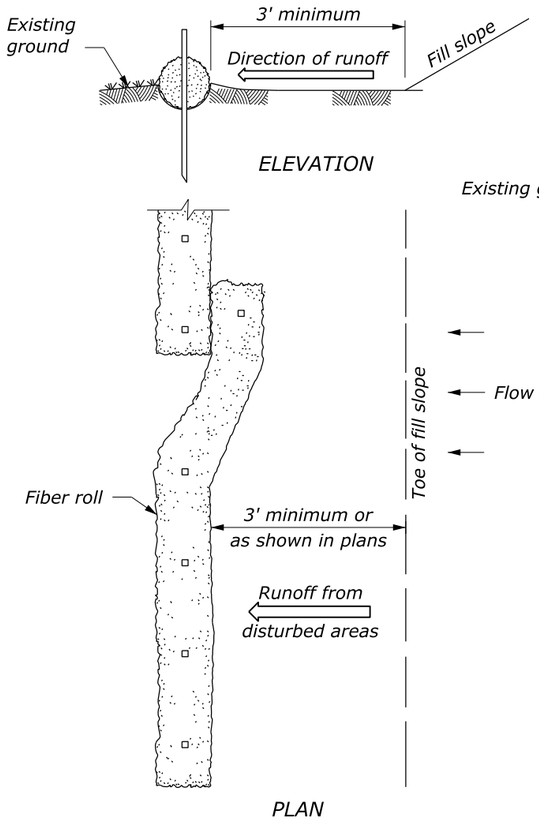

INSTALLATION BEYOND TOE OF SLOPE

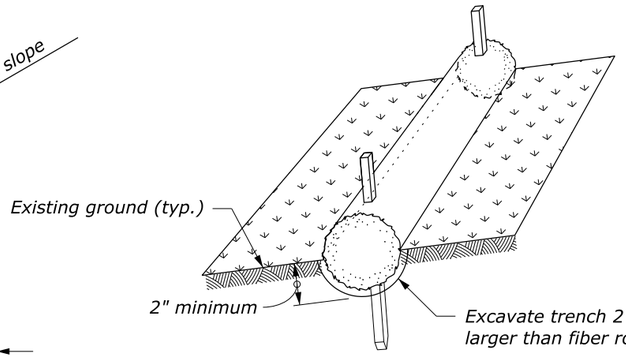

Step 1: Excavate trench and install fiber rolls

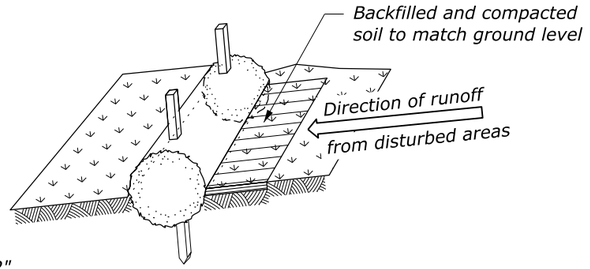

Step 2: Backfill soil against fiber rolls

PROPERLY STAKED AND ENTRENCHED FIBER ROLL

FIBER ROLL SPACING	
Slope	Spacing (FT)
1:4 or flatter	40
1:3	30
1:2	20
1:1	10

STAKES REQUIRED	
Fiber roll length (FT)	Stakes required for each roll
25	8
20	6
12	4

NOTE:

1. Drive stakes at each end and at 4-foot spacing until fiber roll is secure to slope. Live stakes may be used for permanent installations. Do not crush fiber roll while staking.
2. Overlap fiber rolls 12-inch minimum. Drive stakes at 6-inches from fiber roll end angles towards the adjacent fiber roll and space stakes at 4-foot maximum.

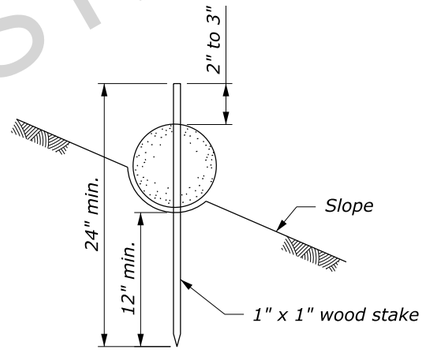

FIBER ROLL STAKING DETAIL

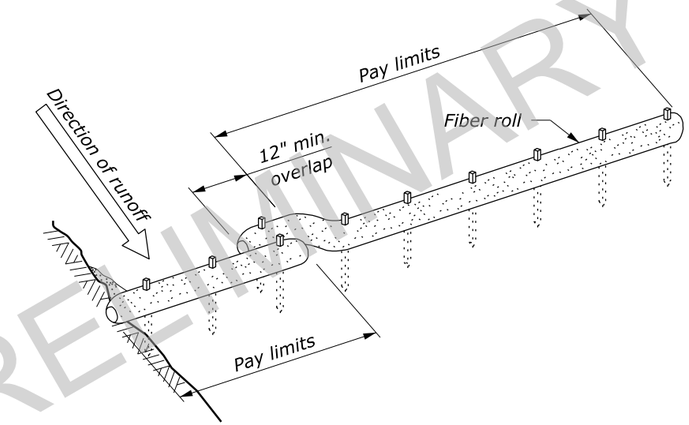

ALTERNATE FIBER ROLL JOINT DETAIL
SLOPE PROTECTION INSTALLATION

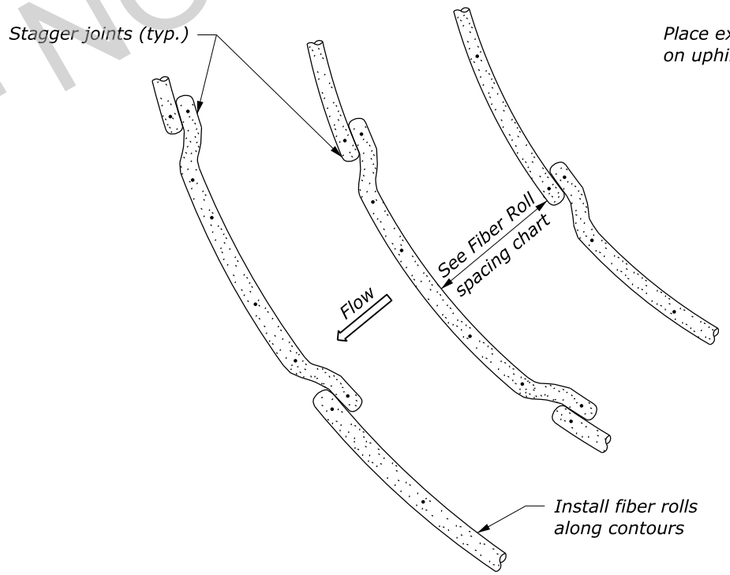

INSTALLATION ALONG SLOPES

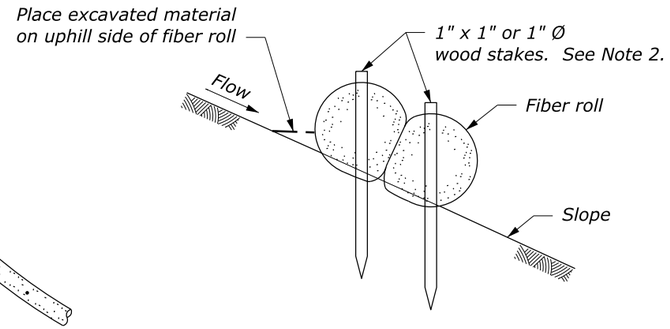

FIBER ROLL LAPPING DETAIL

NO SCALE

U.S. DEPARTMENT OF TRANSPORTATION, FHWA OFFICE OF FEDERAL LANDS HIGHWAY	WFL STANDARD W157-21
FIBER ROLL	SPECIFICATION FP-24, FP-14
	APPROVED FOR USE 7/2016

PRELIMINARY - NOT FOR CONSTRUCTION

c:\pw-work\d0422331\W157-21.dgn [Std W157-21]
28 March 2025 11:17 AM

PROJECT	SHEET NUMBER
WA NP OLYM 12(8)	F.2

METAL ROUND PIPE CULVERT

FILL HEIGHT AND METAL THICKNESS TABLE FOR HELICAL LOCKSEAM AND WELDED SEAM PIPE CULVERT

STEEL

PIPE SIZE DIAMETER INCHES	MINIMUM COVER INCHES	2⅔" x ½" CORRUGATIONS					3" x 1" CORRUGATIONS					5" x 1" CORRUGATIONS				
		METAL THICKNESS (INCH/GAGE)														
		0.064/16	0.079/14	0.109/12	0.138/10	0.168/8	0.064/16	0.079/14	0.109/12	0.138/10	0.168/8	0.064/16	0.079/14	0.109/12	0.138/10	0.168/8
		MAXIMUM FILL HEIGHT ABOVE TOP OF PIPE (FEET)														
12	12	100	100	100	100	100										
15	12	100	100	100	100	100										
18	12	100	100	100	100	100										
21	12	100	100	100	100	100										
24	12	100	100	100	100	100										
30	12	85	100	100	100	100										
36	12	71	89	100	100	100	81	100	100	100	100					
42	12	61	76	100	100	100	70	87	100	100	100					
48	12	53	66	93	100	100	61	76	100	100	100	54	68	95	100	100
54	12		59	83	100	100	54	68	95	100	100	48	60	85	100	100
60	12			74	97	100	49	61	86	100	100	43	54	76	98	100
66	12				87	100	44	55	78	100	100	39	49	69	89	100
72	12				80	97	40	51	71	92	100	36	45	63	82	100
78	12					87	37	47	66	85	100	33	42	58	75	92
84	12					75	35	43	61	78	96	31	39	54	70	86
90	12						32	40	57	73	90	29	36	51	65	80
96	12							38	53	69	84		34	48	61	75
102	18							36	50	65	79		32	45	57	71
108	18								47	61	75			42	54	67
114	18								45	58	71			40	52	63
120	18								43	55	67			38	49	60
126	18									52	64				47	57
132	18									50	61				44	54
138	18									48	58				42	52
144	18										56					50

ALUMINUM

PIPE SIZE DIAMETER INCHES	MINIMUM COVER INCHES	2⅔" x ½" CORRUGATIONS					3" x 1" CORRUGATIONS				
		METAL THICKNESS (INCH/GAGE)									
		0.060/16	0.075/14	0.105/12	0.135/10	0.164/8	0.060/16	0.075/14	0.105/12	0.135/10	0.164/8
		MAXIMUM FILL HEIGHT ABOVE TOP OF PIPE (FEET)									
12	12	100	100	100	100	100					
15	12	100	100	100	100	100					
18	12	100	100	100	100	100					
21	12	88	100	100	100	100					
24	12	77	97	100	100	100					
30	12	62	77	100	100	100	71	89	100	100	100
36	12	52	64	90	100	100	59	74	100	100	100
42	12	44	55	77	99	100	51	64	89	100	100
48	12			67	87	100	44	56	78	100	100
54	18			54	71	88	39	50	69	93	100
60	18				57	72	35	45	62	83	98
66	18					58	32	40	56	76	89
72	18					45	30	37	55	70	82
78	24							34	48	64	75
84	24								44	59	70
90	24								41	62	65
96	24								38	51	61
102	24									46	55
108	24									42	50
114	24										45
120	24										40

NOTE:

1. When directed, camber pipe culverts upward from a chord through the inlet and outlet inverts an ordinate amount equal to 1% of the pipe length. Develop camber on a parabolic curve. If the midpoint elevation on the parabolic curve as designed exceeds the elevation of the inlet invert, reduce the amount of camber or increase the pipe culvert gradient.
2. Fill heights exceeding 100 feet require special analysis by the CO.
3. The fill heights in the table are for helical lockseam and welded seam pipe only. Fill heights for culvert pipe with annular corrugations are more restrictive than those of helical lockseam and welded seam pipe. Obtain approval before furnishing annular corrugation pipe.
4. For flexible pavement and aggregate surface roadways, measure minimum cover from the top of the pipe culvert to the bottom of the roadway subgrade. For rigid pavements, measure minimum cover from the top of the pipe culvert to the top of the pavement. For all roadway surface types, measure maximum fill height from the top of the pipe culvert to the top of the pavement.

METAL PIPE ARCH CULVERT

FILL HEIGHT AND METAL THICKNESS TABLE FOR HELICAL LOCKSEAM AND WELDED SEAM PIPE CULVERT

STEEL

PIPE ARCH SIZE SPAN x RISE INCHES	EQUI-VALENT DIAMETER INCHES	MINIMUM CORNER RADIUS INCHES	MINIMUM COVER INCHES	2⅔" x ½" CORRUGATIONS					3" x 1" CORRUGATIONS					5" x 1" CORRUGATIONS				
				METAL THICKNESS (INCH/GAGE)														
				0.064/16	0.079/14	0.109/12	0.138/10	0.168/8	0.079/14	0.109/12	0.138/10	0.168/8	0.079/14	0.109/12	0.138/10	0.168/8		
				MAXIMUM FILL HEIGHT ABOVE TOP OF PIPE (FEET)														
17 x 13	15	3	12	13														
21 x 15	18	3	12	12														
24 x 18	21	3	12	13														
28 x 20	24	3	12	13														
35 x 24	30	3	12	12														
42 x 29	36	3.5	12	12														
49 x 33	42	4	12		12													
57 x 38	48	5	12			12												
60 x 46	54	8	15							21					21			
64 x 43	54	6	12			12												
66 x 51	60	9	15							21					21			
71 x 47	60	7	12				12											
73 x 55	66	12	18							20					20			
77 x 52	66	8	12					12										
81 x 59	72	14	18						17					17				
83 x 57	72	9	12					12										
87 x 63	78	14	18						17					17				
95 x 67	84	16	18						17					17				
103 x 71	90	16	18							17				17				
112 x 75	96	18	21							16					16			
117 x 79	102	18	21							16					16			
128 x 83	108	18	24								16					16		
137 x 87	114	18	24								16					16		
142 x 91	120	18	24									16						16

ALUMINUM

PIPE ARCH SIZE SPAN x RISE INCHES	EQUI-VALENT DIAMETER INCHES	MINIMUM CORNER RADIUS INCHES	MINIMUM COVER INCHES	2⅔" x ½" CORRUGATIONS				3" x 1" CORRUGATIONS			
				METAL THICKNESS (INCH/GAGE)							
				0.060/16	0.075/14	0.105/12	0.135/10	0.060/16	0.075/14	0.105/12	0.135/10
				MAXIMUM FILL HEIGHT ABOVE TOP OF PIPE (FEET)							
17 x 13	15	3	12	13							
21 x 15	18	3	12	12							
24 x 18	21	3	12	13							
28 x 20	24	3	12		13						
35 x 24	30	3	12		12						
42 x 29	36	3.5	15			12					
49 x 33	42	4	15			12					
57 x 38	48	5	15				12				
60 x 46	54	8	15					21			
64 x 43	54	6	18				12				
66 x 51	60	9	18					21			
73 x 55	66	12	18						20		
81 x 59	72	14	21							17	
87 x 63	78	14	21							17	
95 x 67	84	16	24							17	
103 x 71	90	16	24								17

NO SCALE

U.S. DEPARTMENT OF TRANSPORTATION, FHWA OFFICE OF FEDERAL LANDS HIGHWAY	FLH STANDARD 602-1
METAL PIPE CULVERT	SPECIFICATION FP-24, FP-14
	APPROVED FOR USE 8/2024

PRELIMINARY - NOT FOR CONSTRUCTION

c:\pw-work\d0471956\Std602-1.dgn [Std 602-1]
12 August 2024 3:12 PM

PROJECT	SHEET NUMBER
WA NP OLYM 12(8)	F.3

COUPLING BANDS FOR METAL PIPE CULVERT [1]

CORRUGATION SIZE [2] INCHES	ROUND PIPE DIAMETER INCHES	PIPE ARCH SPAN × RISE INCHES	MINIMUM BAND WIDTH (INCHES)		
			ANNULAR CORRUGATED BANDS [3]	HELICALLY CORRUGATED BANDS [4]	SEMI-CORRUGATED BANDS [5]
1½ × ¼	underline [6]	-	10.5	7	10.5
2⅔ × ½	12 to 36	17 × 13 to 42 × 29	7	12	
	42 to 72	49 × 33 to 83 × 57	10.5	12	
	78 to 84	-	10.5	12	10.5
3 × 1	36 to 72	60 × 46 to 81 × 59	12	14	10.5
	78 to 144	87 × 64 to 142 × 91	12	14	10.5
5 × 1	36 to 72	60 × 46 to 81 × 59	20	22	
	78 to 144	87 × 64 to 142 × 91	20	22	

[1] Fabricate annular, helical and semi-corrugated type coupling bands from the same metal as the connecting pipe. Provide coupling bands not more than 3 nominal sheet thicknesses thinner than the thickness of the pipe to be connected, and no thinner than 0.052 inch for steel or 0.048 inch for aluminum. Fasten coupling bands with the following diameter of bolt:
⅜" for 18" round culvert (21" × 15" pipe arch) or less
½" for 21" round culvert (24" × 18" pipe arch) or more

[2] For helically corrugated pipe with rerolled ends, the nominal corrugations size refers to the dimension of the end corrugation in the pipe.

[3] Use annular corrugated bands with pipes having annular corrugations or with helical pipe having rerolled end to form annular corrugations. A 10.5 inch band is acceptable on pipe ends rerolled with 2⅔" × ½" corrugations. A 12 inch band is acceptable on pipe ends rerolled with 3" × 1" pipe corrugations.

[4] Use helical corrugated bands with pipes having helically corrugated ends.

[5] The minimum band widths shown for 3" × 1" and 5" × 1" corrugated sizes apply to 2⅔" × ½" corrugations on rerolled pipe ends.

[6] Smooth sleeve-type couplers and flat bands may be used for pipe diameters of 12" or less. Use a matching metal having a nominal thickness of not less than 0.040 inch for steel, or 0.036 inch for aluminum, or a plastic with an equivalent strength to metal.

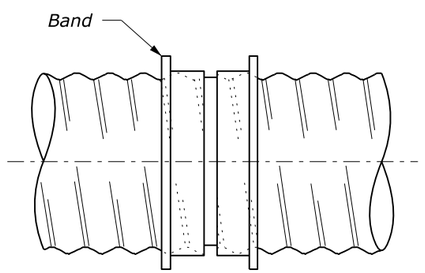

SLEEVE JOINT

Smoother sleeve with center stop.
Stab type joint

SMOOTH SLEEVE BAND

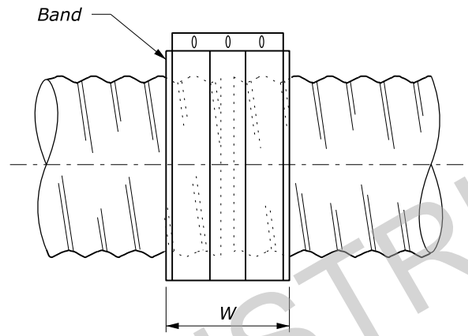

FLAT BAND

NOTE:

1. Other types of coupling bands or fastening devices that comply with the joint performance criteria of AASHTO Standard specifications for Highway Bridges, Division II Section 26 may be used.

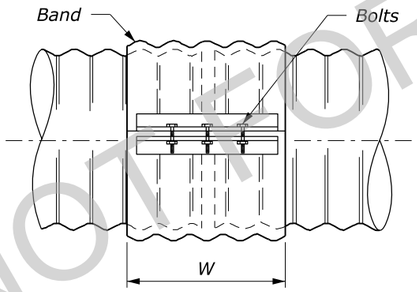

SIDE VIEW

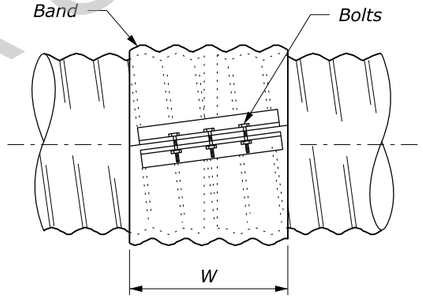

SIDE VIEW

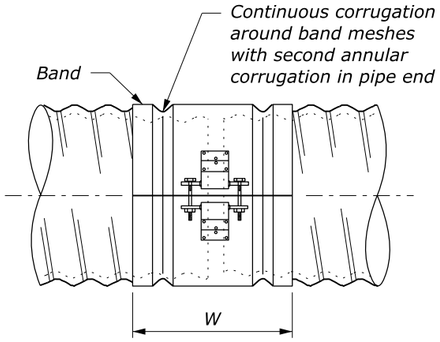

SIDE VIEW

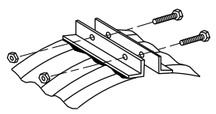

Band Angle

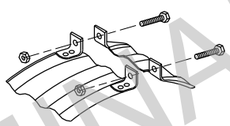

Oval Lug

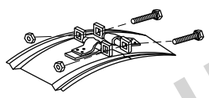

Bar & Strap

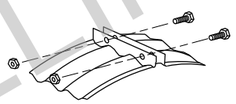

Integral Flange

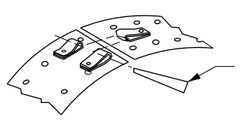

Wedge and Strap

STANDARD BAND CONNECTIONS

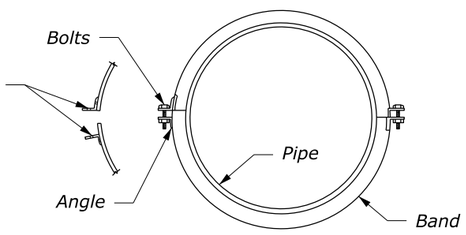

END VIEW

Second angle connection optional to 42" diameter, required above 42" diameter

ANNULAR BAND

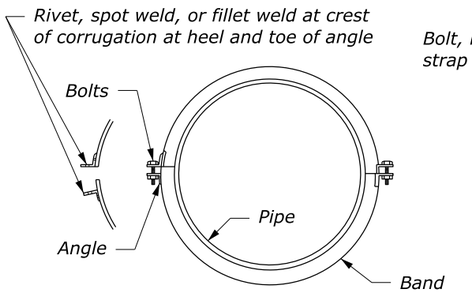

END VIEW

Second angle connection optional to 42" diameter, required above 42" diameter

HELICAL BAND

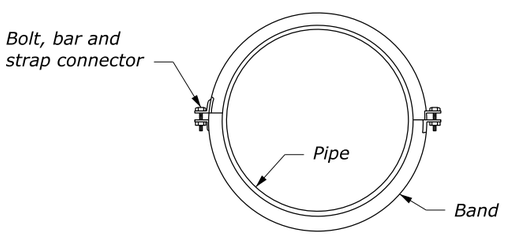

END VIEW

SEMI-CORRUGATED BAND

NO SCALE

U.S. DEPARTMENT OF TRANSPORTATION, FHWA OFFICE OF FEDERAL LANDS HIGHWAY	FLH STANDARD 602-2
METAL PIPE CULVERT COUPLING BAND	SPECIFICATION FP-24, FP-14
	APPROVED FOR USE 1/2024

PRELIMINARY - NOT FOR CONSTRUCTION

c:\pw-work\d0471956\Std602-2.dgn [Std 602-2]
24 July 2024 9:28 AM

PROJECT	SHEET NUMBER
WA NP OLYM 12(8)	F.4

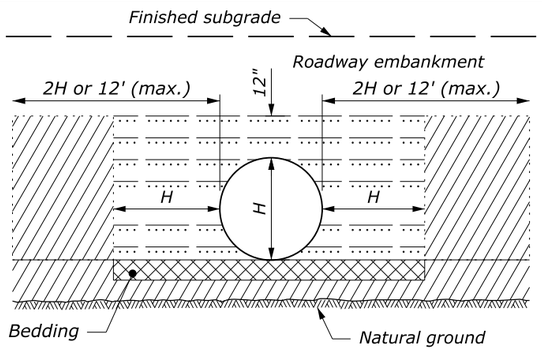

ABOVE NATURAL GROUND

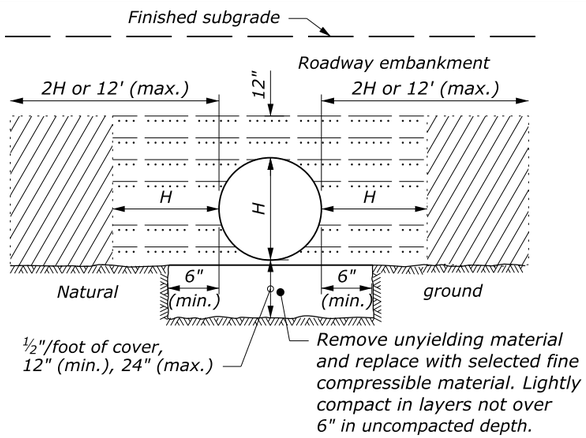

ON UNYIELDING MATERIAL

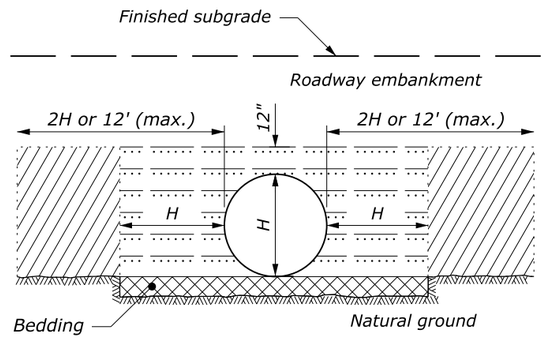

ON NATURAL GROUND

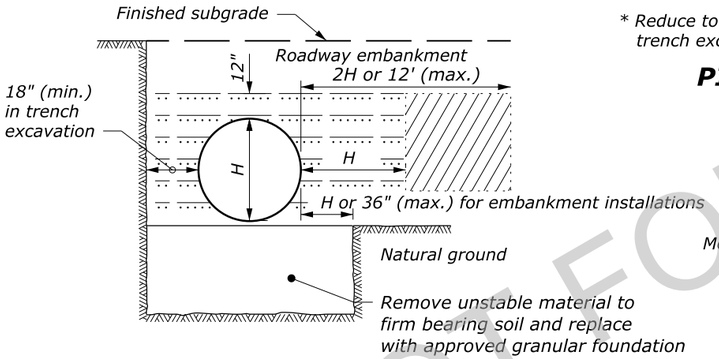

ON UNSTABLE MATERIAL

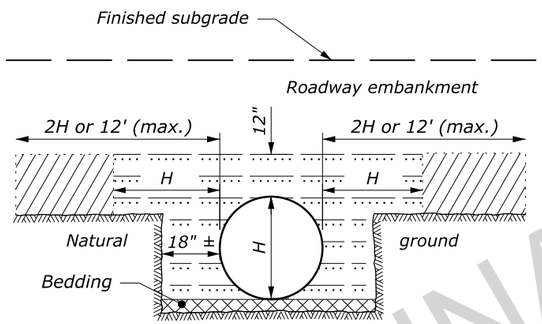

ABOVE AND BELOW NATURAL GROUND

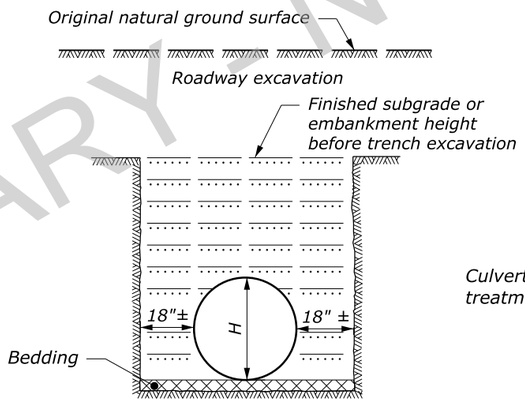

BELOW NATURAL GROUND OR TRENCH EXCAVATION IN EMBANKMENT

LEGEND:

- *Bedding material (uncompacted)*
- *Embankment material placed in layers not exceeding 6" compacted depth.*
- *Compacted backfill material placed in layers not exceeding 6" compacted depth; or flowable backfill according to Section 614.*
- *Impermeable backfill material.*

BEDDING DEPTH	
PIPE SIZE (H)	DEPTH
12" to 54"	4"
> 54"	6"

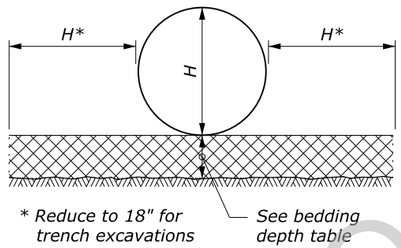

PIPE BEDDING

NOTE:

1. *When directed, camber pipe culverts upward from a chord through the inlet and outlet inverts an ordinate amount equal to 1% of the pipe length. Develop camber on a parabolic curve. If the midpoint elevation on the parabolic curve as designed exceeds the elevation of the inlet invert, reduce the amount of camber or increase the pipe culvert gradient.*
2. *H equals the diameter of all round pipe culverts or the rise dimension of all pipe arch culverts.*
3. *See Section 704 for bedding and backfill requirements.*

MINIMUM SPACING	
DIAMETER or SPAN	SPACING
UP to 48"	24"
48" and UP	Half diameter or span or 36", whichever is less

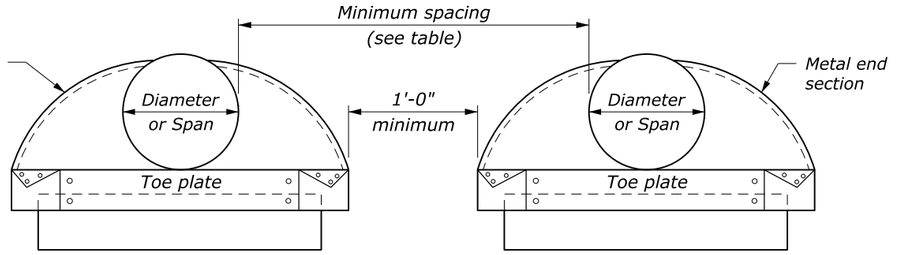

ELEVATION

MULTIPLE PIPE INSTALLATION

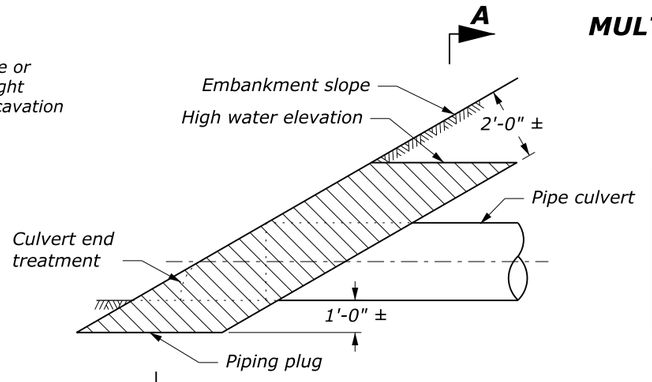

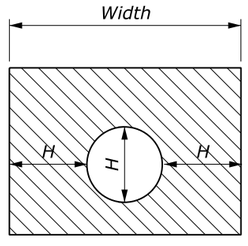

SECTION A-A

Construct piping plug of impermeable backfill material at the pipe culvert inlet where granular material is used for backfill. Width may be adjusted to tie into impervious material.

PIPING PLUG

NO SCALE

U.S. DEPARTMENT OF TRANSPORTATION, FHWA
OFFICE OF FEDERAL LANDS HIGHWAY

METAL AND PLASTIC PIPE CULVERT BEDDING

FLH STANDARD
602-3
SPECIFICATION
FP-24
APPROVED FOR USE
1/2024

PRELIMINARY - NOT FOR CONSTRUCTION

c:\pw-work\d0471956\Std602-3.dgn [Std 602-3]
24 July 2024 10:00 AM

PROJECT	SHEET NUMBER
WA NP OLYM 12(8)	F.5

END SECTIONS FOR ROUND PIPE CULVERT

PIPE SIZE DIAMETER INCHES	METAL THICKNESS				DIMENSIONS INCHES					SLOPE Approx.
	STEEL		ALUMINUM							
	INCHES	GAGE	INCHES	GAGE	A (min)	B (max)	H (min)	L (±2")	W (max)	
12	0.064	16	0.060	16	5	7	6	21	44	2¼
15	0.064	16	0.060	16	6	8	6	26	52	2¼
18	0.064	16	0.060	16	7	10	6	31	58	2⅛
21	0.064	16	0.060	16	8	12	6	36	66	2⅛
24	0.064	16	0.060	16	9	13	6	41	72	2⅛
30	0.079	14	0.075	14	11	16	8	51	88	2⅛
36	0.079	14	0.075	14	13	19	9	60	105	2
42	0.109	12	0.105	12	15	25	10	69	122	2⅛
48	0.109	12	0.105	12	17	29	12	78	131	2
54	0.109	12	0.105	12	17	33	12	84	143	2
60	0.109	12	0.105	12	17	36	12	87	157	1⅞
66	0.109	12	0.105	12	17	39	12	87	162	1⅝
72	0.109	12	0.105	12	17	44	12	87	169	1½
78	0.109	12	0.105	12	17	48	12	87	178	1⅜
84	0.109	12	0.105	12	17	52	12	87	184	1⅓
90	0.109	12	0.105	12	17	58	12	87	188	1¼
96	0.109	12	0.105	12	17	58	12	87	197	1⅛

END SECTIONS FOR PIPE ARCH CULVERT

PIPE SIZE SPAN × RISE INCHES	EQUI-VALENT DIAM. (INCHES)	METAL THICKNESS				DIMENSIONS INCHES					SLOPE Approx.
		STEEL		ALUMINUM							
		INCHES	GAGE	INCHES	GAGE	A (min)	B (max)	H (min)	L (±2")	W (max)	
17 × 13	15	0.064	16	0.060	16	7	9	6	19	30	2½
21 × 15	18	0.064	16	0.060	16	7	10	6	23	36	2½
24 × 18	21	0.064	16	0.060	16	8	12	6	28	42	2½
28 × 20	24	0.064	16	0.060	16	9	14	6	32	48	2½
35 × 24	30	0.079	14	0.075	14	10	16	8	39	60	2½
42 × 29	36	0.079	14	0.075	14	12	18	9	46	75	2½
49 × 33	42	0.109	12	0.105	12	13	21	12	53	85	2½
57 × 38	48	0.109	12	0.105	12	18	26	12	63	90	2½
60 × 46	54	0.109	12	0.105	12	18	34	12	70	102	2
64 × 43	54	0.109	12	0.105	12	18	30	12	70	102	2
66 × 51	60	0.109	12	0.105	12	18	33	12	77	116	1½
71 × 47	60	0.109	12	0.105	12	18	33	12	77	114	1½
73 × 55	66	0.109	12	0.105	12	18	36	12	77	126	1½
77 × 52	66	0.109	12	0.105	12	18	36	12	77	126	1½
81 × 59	72	0.109	12	0.105	12	18	39	12	77	138	1½
83 × 57	72	0.109	12	0.105	12	18	39	12	77	138	1½
87 × 63	78	0.109	12	0.105	12	20	38	12	77	148	1½
95 × 67	84	0.109	12	0.105	12	20	34	12	87	162	1½
103 × 71	90	0.109	12	0.105	12	20	38	12	87	174	1½
112 × 75	96	0.109	12	0.105	12	20	40	12	87	174	1½

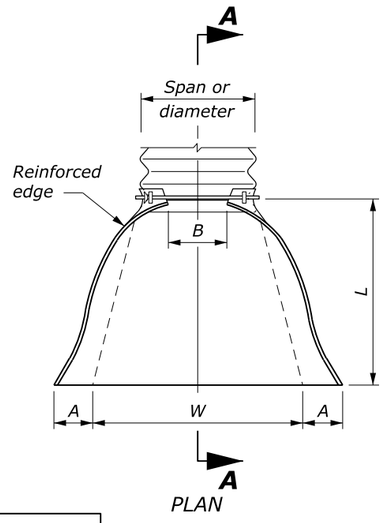

PLAN

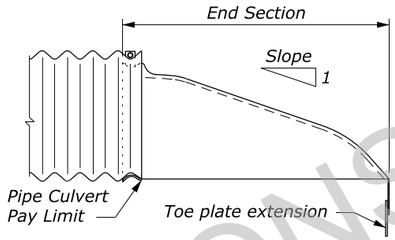

SECTION A-A

ROUND OR PIPE ARCH CULVERT

NOTE:

1. *Variations in design and dimensions are permitted to allow for manufacturer's standards.*
2. *Fabricate the diameter of the end section of Design B to match the inside diameter of the concrete pipe culvert.*
3. *Design C may be used in lieu of design A for all metal pipe culvert sizes. Coupling bands may be any acceptable type for the pipe culvert specified.*
4. *Fabricate multiple piece bodies with lap seams tightly joined by ⅜" rivets or bolts. Fabricate end section center panels for 60" and larger diameter pipe and equivalent pipe arch from 0.138 inch steel or 0.135 inch aluminum.*
5. *On end section center panels for 66" and larger equivalent pipe arch provide 2½" × 2½" × ¼" angle reinforcement bolted or riveted under the center panel seam.*
6. *Supplement the reinforced edges of end sections for 60" and larger diameter pipe and 66" and larger equivalent pipe arch with 2½" × 2½" × ¼" stiffener angles attached with bolts or rivets.*
7. *Fabricate connector section, corner plate and toe plate extensions from the same metal thickness as the panel body. Use toe plate extension where shown on the plans.*
8. *Warp embankment slopes to match the slope of the flared end sections.*

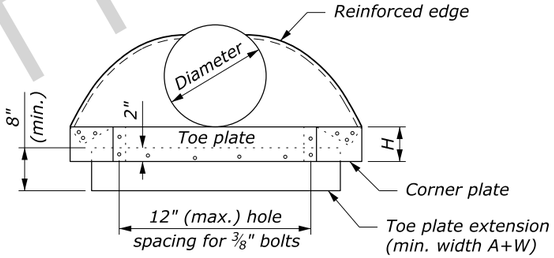

ELEVATION

ROUND PIPE CULVERT

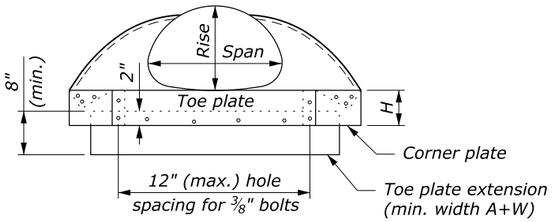

ELEVATION

PIPE ARCH CULVERT

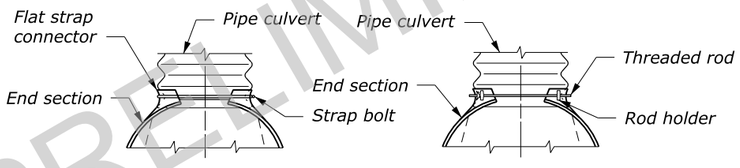

For 12" thru 24" round pipe and 17" × 13" thru 28" × 20" pipe arch

For 30" thru 60" round pipe and 35" × 24" thru 66" × 51" pipe arch

DESIGN A CONNECTION TO ANNULAR CORRUGATED METAL PIPE

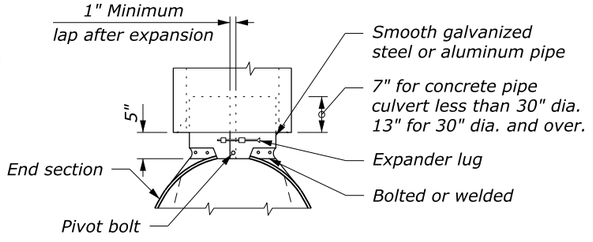

DESIGN B CONNECTION TO CONCRETE PIPE INLET END

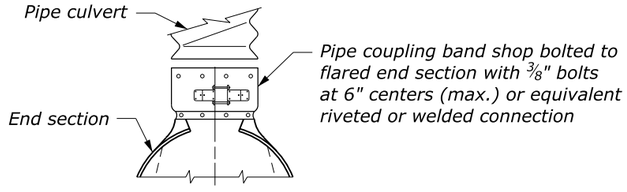

For all sizes of round pipe and pipe arch

DESIGN C CONNECTION TO METAL PIPE OR OUTLET END OF CONCRETE PIPE

NO SCALE

U.S. DEPARTMENT OF TRANSPORTATION, FHWA OFFICE OF FEDERAL LANDS HIGHWAY	FLH STANDARD 602-4
METAL END SECTIONS	SPECIFICATION FP-24, FP-14
	APPROVED FOR USE 1/2024

PRELIMINARY - NOT FOR CONSTRUCTION

c:\pw-work\d0471956\Std602-4.dgn [Std 602-4]
24 July 2024 11:27 AM

PROJECT	SHEET NUMBER
WA NP OLYM 12(8)	F.6

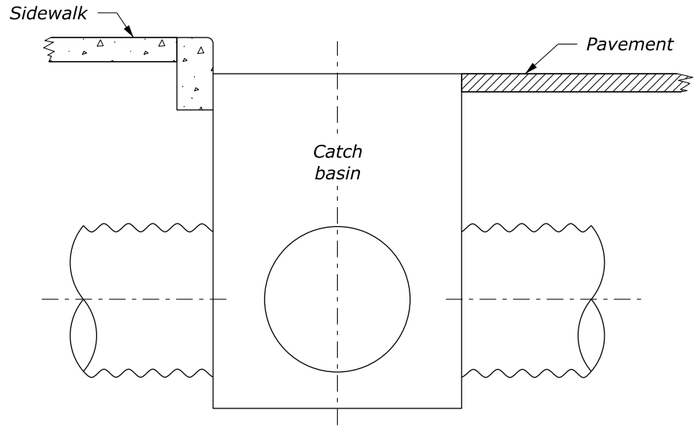

TYPICAL INSTALLATION CURB SECTION

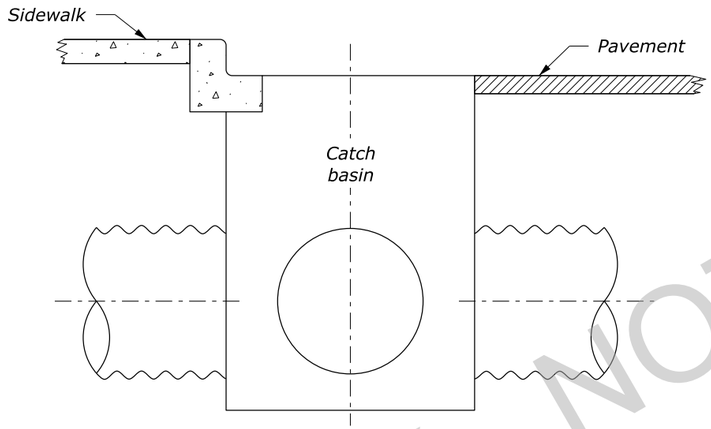

TYPICAL INSTALLATION CURB AND GUTTER SECTION

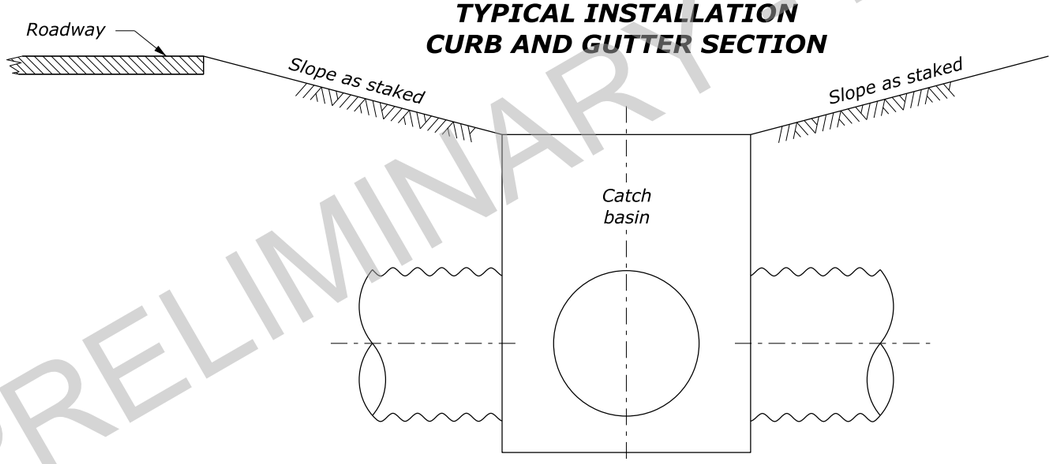

TYPICAL INSTALLATION DITCH SECTION

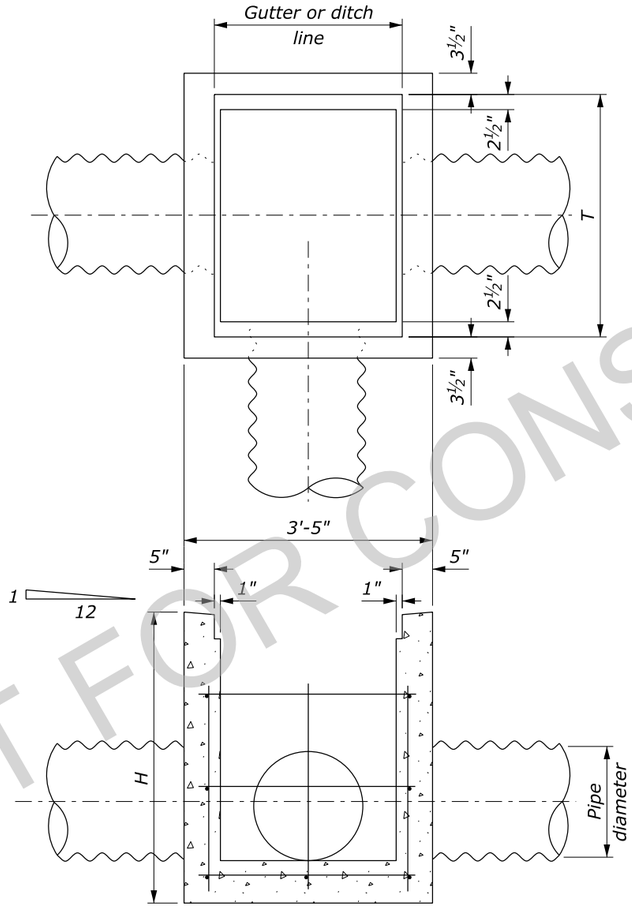

All reinforcing steel #4 at 12"±. Bend to clear pipe

INLET DETAIL

NOTE:

1. *Chamfer all exposed edges ¾ inch and finish all exposed surfaces with a Class 1 ordinary finish.*
2. *The minimum concrete cover to the face of any bar is 2 inches unless otherwise shown.*
3. *See Standard 604-2 for Type A Frame and Grate and Standard 604-3 for Type B Frame and Grate.*

CONCRETE CATCH BASINS			
PIPE SIZE DIAMETER	DEPTH H	FRAME AND GRATE T	
		TYPE A	TYPE B
12"	3'-0"	2'-6"	2'-6"
18"	3'-0"	2'-6"	2'-6"
24"	4'-0"	3'-3"	3'-4"
30"	4'-0"	4'-0"	4'-2"
36"	4'-6"	4'-9"	5'-0"
42"	5'-0"	5'-6"	5'-5"
48"	5'-6"	6'-3"	6'-3"

CONCRETE CATCH BASINS				
PIPE SIZE DIAMETER	ESTIMATED QUANTITIES			
	CONCRETE CUYD	REINFORCING STEEL LB	FRAME AND GRATE LB	
			TYPE A	TYPE B
12"	0.7	54	215	238
18"	0.7	54	215	238
24"	1.1	81	271	314
30"	1.2	92	327	390
36"	1.5	101	383	466
42"	1.8	131	439	504
48"	2.2	151	495	580

NO SCALE

U.S. DEPARTMENT OF TRANSPORTATION, FHWA OFFICE OF FEDERAL LANDS HIGHWAY	FLH STANDARD 604-1
CATCH BASIN, TYPE 1	SPECIFICATION FP-24, FP-14
	APPROVED FOR USE 1/2024

PRELIMINARY - NOT FOR CONSTRUCTION

c:\pw-work\dms44776\Std604-1.dgn [Std 604-1]
23 July 2024 2:41 PM

PROJECT	SHEET NUMBER
WA NP OLYM 12(8)	F.7

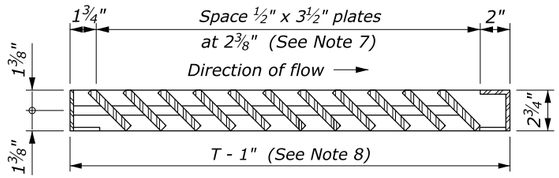

SECTION A-A

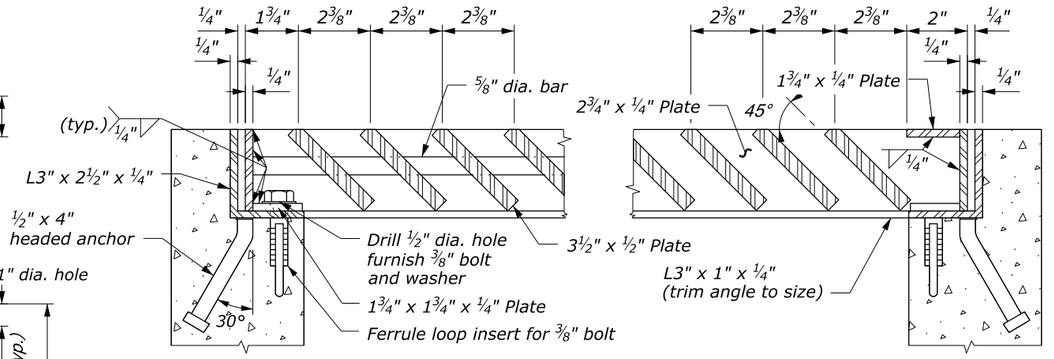

SECTION B-B

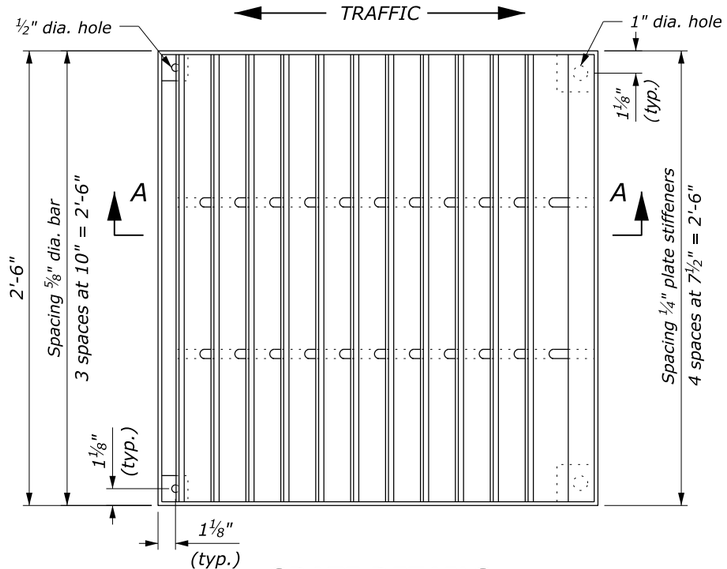

GRATE DETAILS

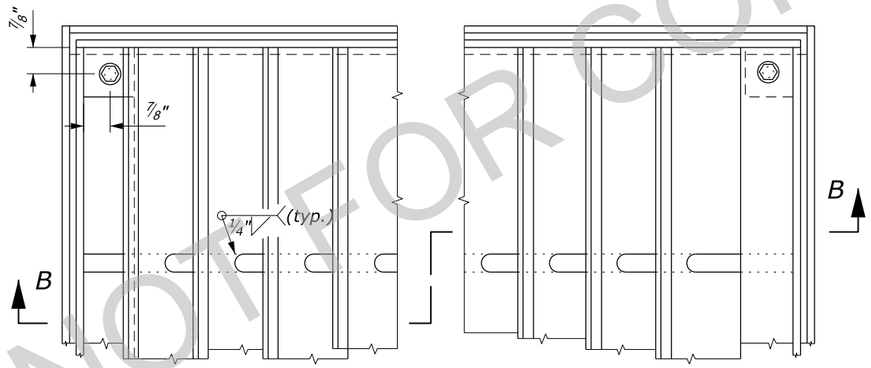

FRAME AND GRATE DETAILS

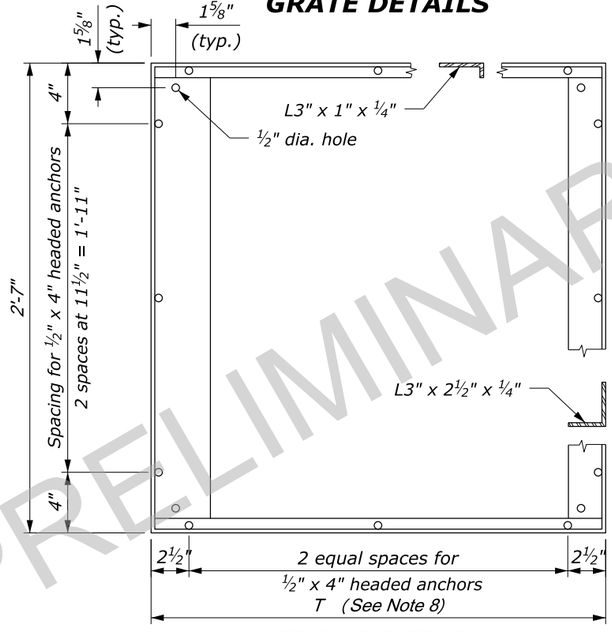

FRAME DETAIL

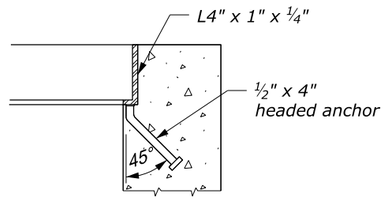

FRAME ANCHOR DETAIL

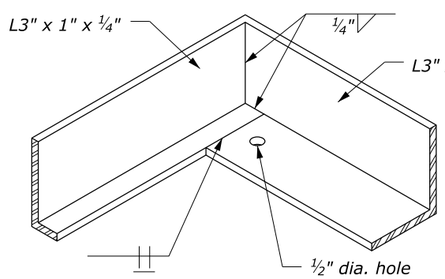

FRAME CORNER DETAIL

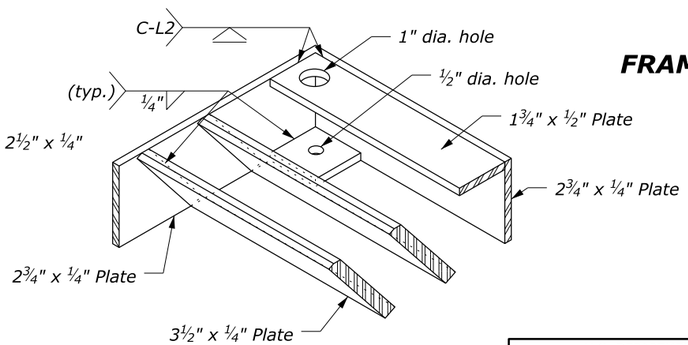

GRATE CORNER DETAIL

NO SCALE

NOTE:

1. STRUCTURAL STEEL: ASTM A36.
2. BOLTS & WASHERS: ASTM A307, Galvanized.
3. THREADED CONCRETE ANCHORS: Ferrule loop inserts for ⅜ inch bolt or approved equal.
4. HEADED CONCRETE ANCHORS: Weld to frame with a full penetration butt weld.
5. WELDING: Weld in conformance with the Standard Specifications. Unless otherwise indicated seal weld all joints with a minimum size fillet weld, based on material thickness. Grind smooth all contact surfaces. FINISH: Galvanized after fabrication.
6. Estimated weight, frame and grate (2'-6" x 2'-6") 238 lbs. Increase or decrease weight by 19 lbs for each 2⅜-inch increment.
7. Number of plates varies according to pipe diameter. See Standard 604-1.
8. See Standard 604-1 for dimensions of T.

PRELIMINARY - NOT FOR CONSTRUCTION

c:\pw-work\dms44776\Std604-3.dgn [Std 604-3]
23 July 2024 3:28 PM

U.S. DEPARTMENT OF TRANSPORTATION, FHWA OFFICE OF FEDERAL LANDS HIGHWAY	FLH STANDARD 604-3
METAL FRAME AND GRATE TYPE B	SPECIFICATION FP-24, FP-14
	APPROVED FOR USE 1/2024

NPS PMIS No. 335141,NPS Drawing No. 149/198715

PROJECT	SHEET NUMBER
WA NP OLYM 12(8)	G.2

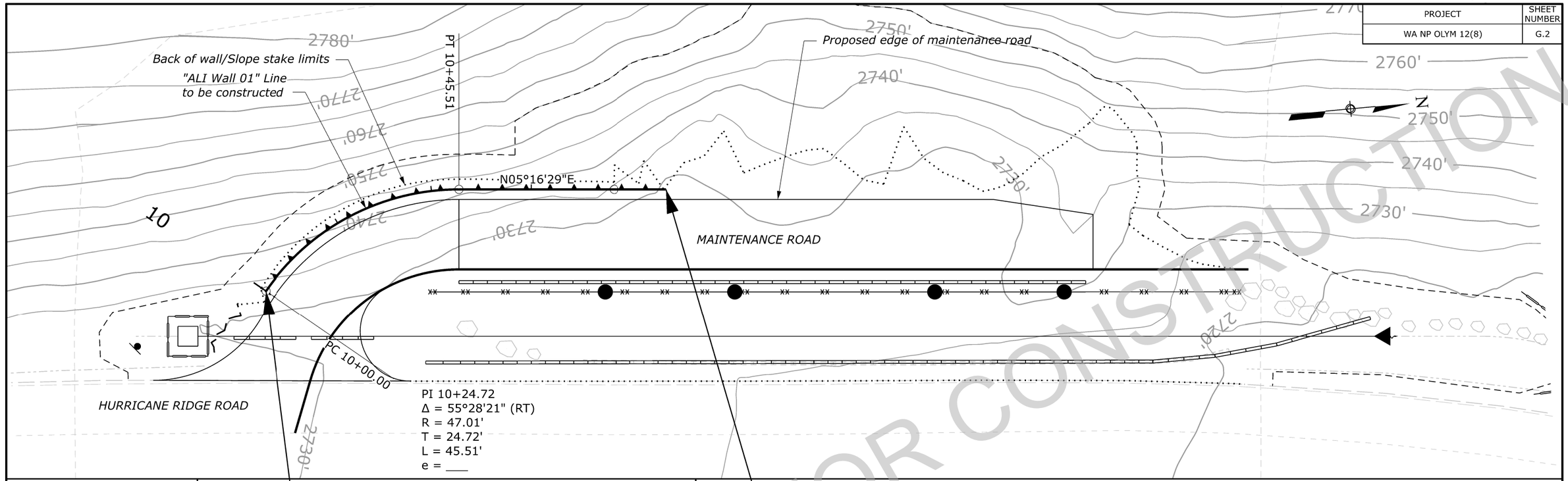

PRELIMINARY - NOT FOR CONSTRUCTION

SOIL NAIL RETAINING WALL PLAN-PROFILE

c:\pw_workdir\jacobs-amer-transp\d0311263\wa-olym01208_plh_pp_snw_01.dgn [ALI_Wall_01 - Plan 1 [Sheet]]
30 June 2026 1:46 PM

PROJECT	SHEET NUMBER
WA NP OLYM 12(8)	G.3

SPECIFICATIONS

Design:

Soil Nail Wall vendor shall perform all internal and external design (excluding seismic design).

The design drawings and calculations shall be signed and sealed by a professional Geotechnical Engineer licensed by the State of Washington.

Design for soil nail walls shall conform to the latest editions of AASHTO LRFD Bridge Design Specifications. Class A Corrosion Protection is required.

Provide a minimum service life of 75 years for all components.

See Geotechnical Report GR1124 for additional information and design parameters for contractor designed soil nail wall.

Soil Properties

Material Description	Moist Unit Weight (pcf)	Angle of Internal Friction (Degrees)	Cohesion Intercept (psf)
Foundation & Retained Soil	120	34	0

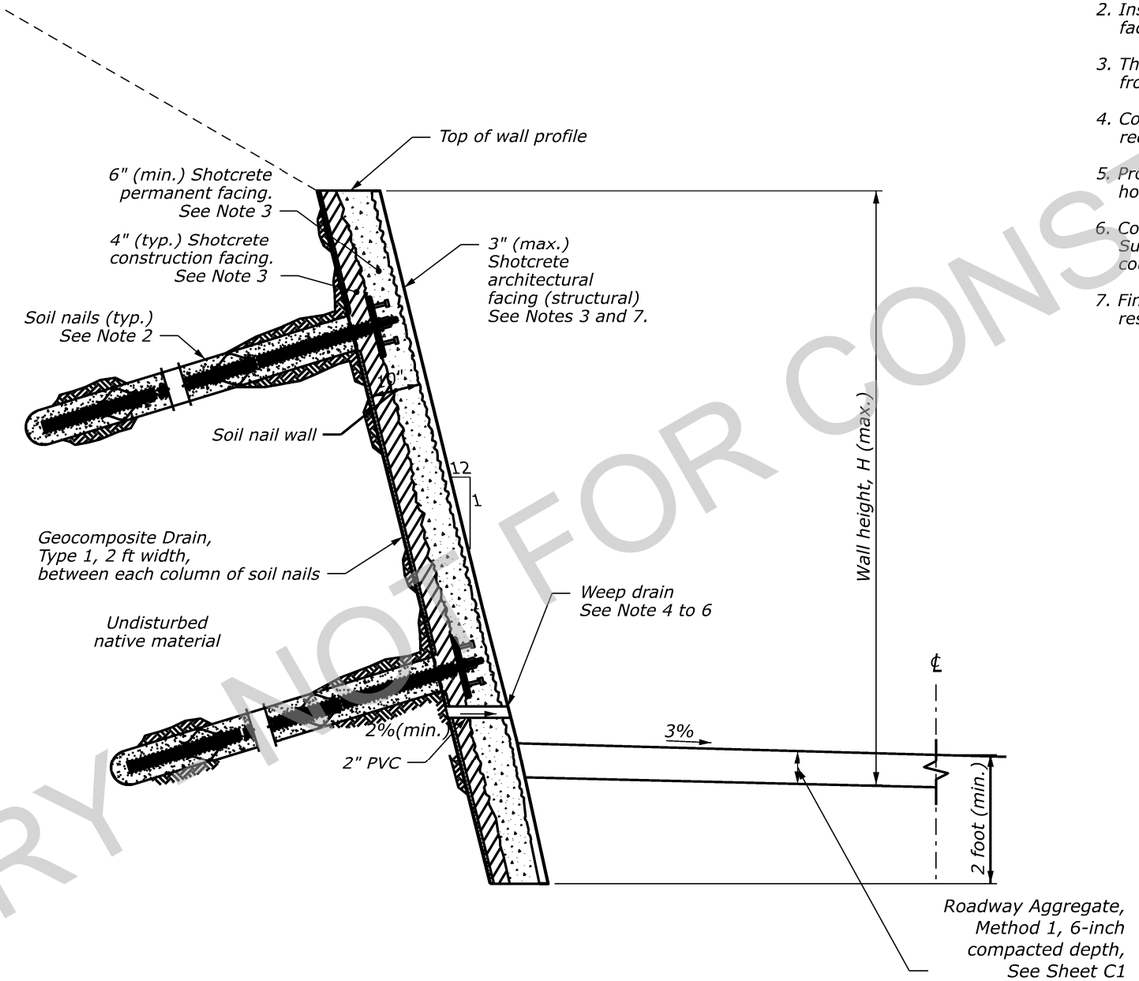

TYPICAL SECTION

NOTE:

1. Soil nail wall layout, plan, details, and facing are illustrative. Provide final design details according to Sections 257 and 259.
2. Install soil nails in lifts from the top down. Construct shotcrete face prior to installing the next row of nails as per Section 259.
3. The permanent shotcrete facing can be applied in one lift or in lifts from bottom up.
4. Connect weep drains to geocomposite according to manufacturer's recommendations.
5. Provide weep drain between each column of soil nails. Daylight weep holes a minimum of 12 inches above final grade at base of wall.
6. Cover the end of the weep holes with screen according Subsection 605.03. Hold the screen securely in place with standard coupling bands or by other approved means.
7. Finish shotcrete architechtural facing by sculpting and staining to resemble existing rock faces in the surrounding area.

PRELIMINARY - NOT FOR CONSTRUCTION

NO SCALE

SOIL NAIL RETAINING WALL TYPICAL SECTION DETAILS

18 June 2026 10:50 AM c:\pw_workdir\jacobs-amer-transp\d0311263\cria201801_PLN_1.dgn [SOIL NAIL RETAINING WALL TYPICAL SECTION DETAILS]

PROJECT	SHEET NUMBER
WA NP OLYM 12(8)	G.4

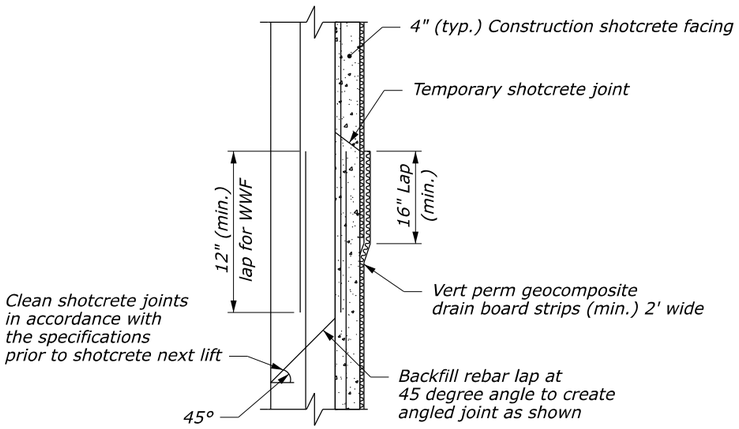

SHOTCRETE WALL JOINT DETAIL

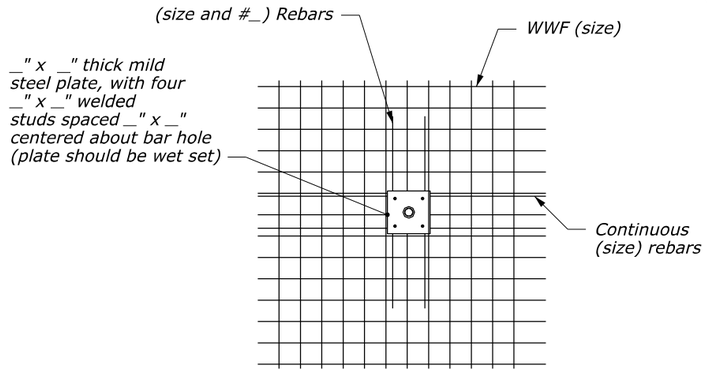

CONSTRUCTION SHOTCRETE FACING REINFORCEMENT DETAIL

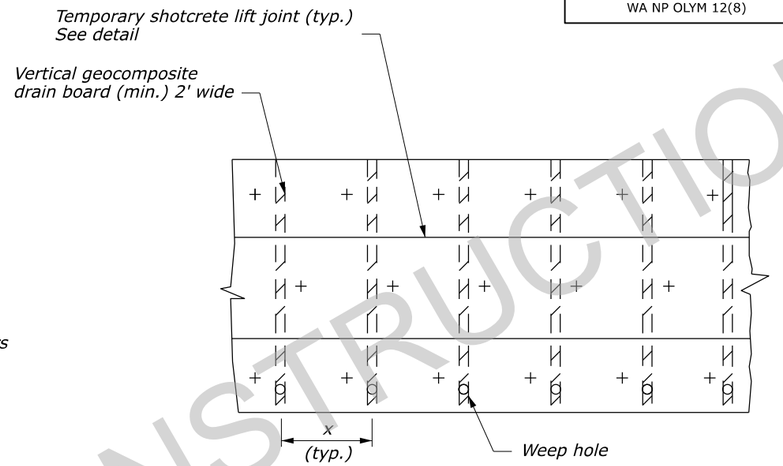

GEOCOMPOSITE DRAINAGE STRIP DETAIL

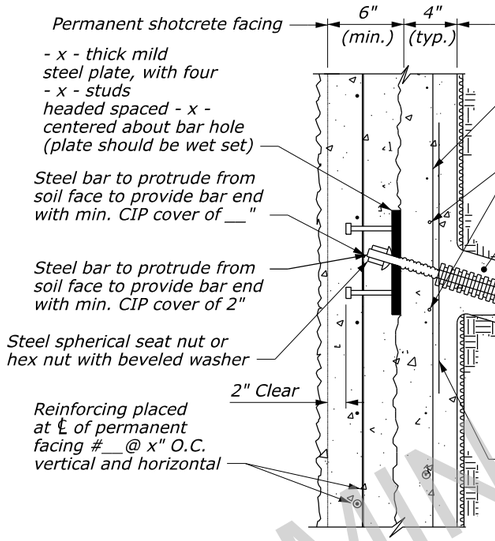

TYPICAL SOIL NAIL FACING JOINT

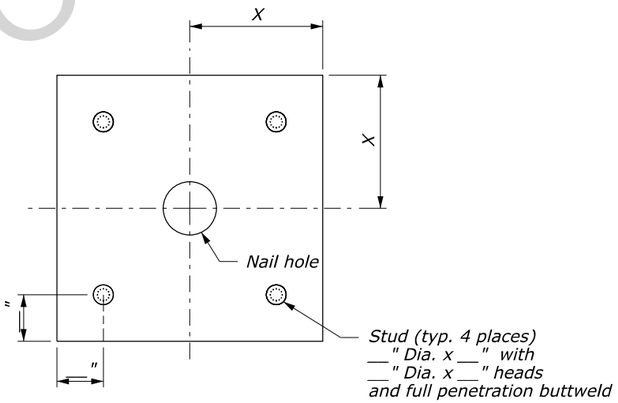

CONNECTOR PLATE WITH STUD DETAIL

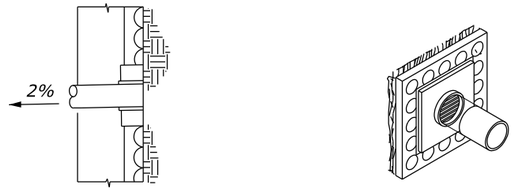

SECTIONAL VIEW

ISOMETRIC VIEW

NOTE: Drain grate installation shall not disrupt geotextile design

DRAIN GRATE DETAILS

NOTE:

1. The details on this sheet are illustrative and informational purpose only. The contractor is responsibile for furnishing final design details for approval by the CO.

PRELIMINARY - NOT FOR CONSTRUCTION

NO SCALE

SOIL NAIL RETAINING WALL TYPICAL DETAILS

Sheet 1 of 2

c:\pw_workdir\jacobs-amer-transp\d0311263\cda201801_PLN_Idgn [SOIL NAIL RETAINING WALL TYPICAL DETAILS (SHEET 1 OF 2)]
4 March 2026 12:31 PM

PROJECT	SHEET NUMBER
WA NP OLYM 12(8)	G.5

PRELIMINARY - NOT FOR CONSTRUCTION

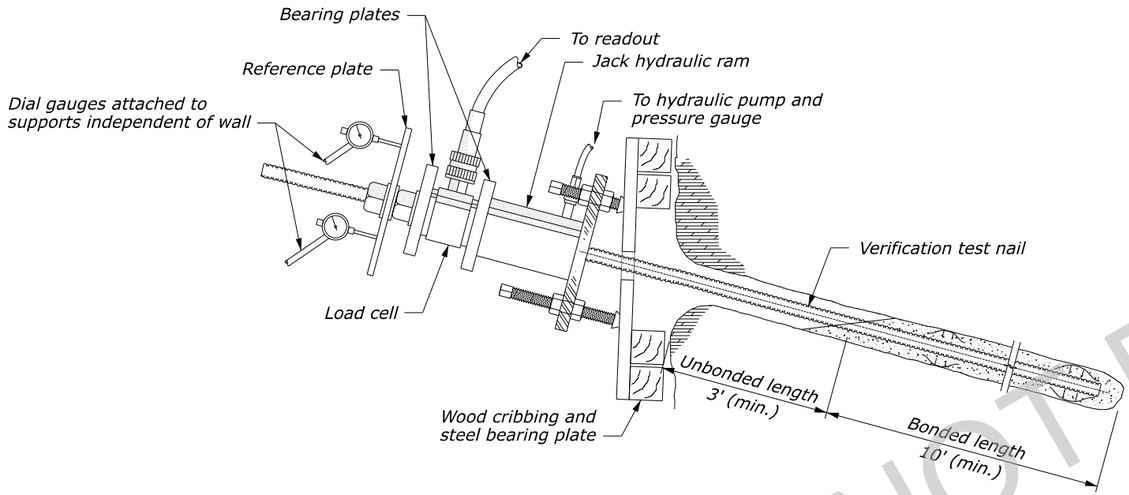

VERIFICATION TEST SOIL NAIL DETAIL

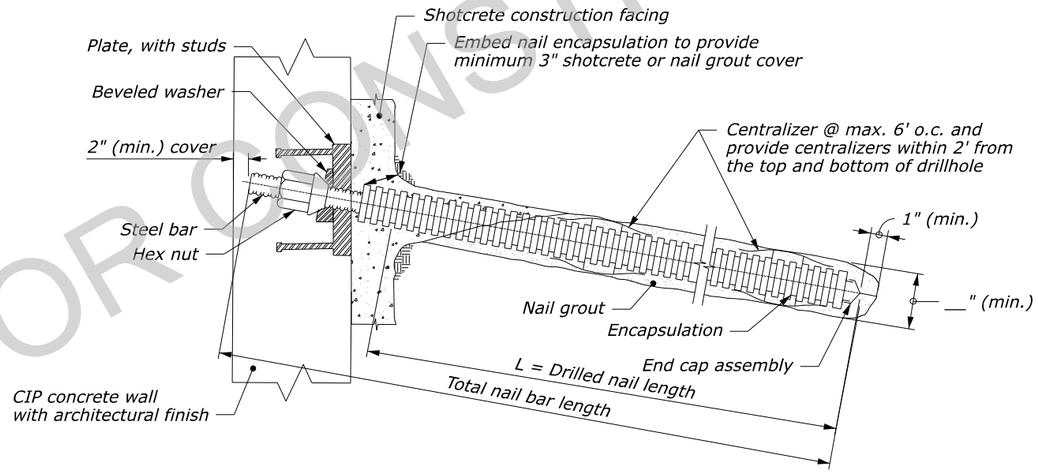

ENCAPSULATED PRODUCTION SOIL NAIL DETAIL

NOTE:

1. *The details on this sheet are illustrative and informational purpose only. The contractor is responsible for furnishing final design details to the CO for approval.*
2. *Bare bars may be used for sacrificial test nails.*
3. *Proof test detail as verification test performed on a production nail.*

NO SCALE

SOIL NAIL RETAINING WALL TYPICAL DETAILS
Sheet 2 of 2

c:\pw_workdir\jacobs-amer-transp\d0311263\cfda201801_PLN_1.dgn [SOIL NAIL RETAINING WALL TYPICAL DETAILS (SHEET 2 OF 2)]
4 March 2026 12:28 PM

PROJECT	SHEET NUMBER
WA NP OLYM 12(8)	H.1

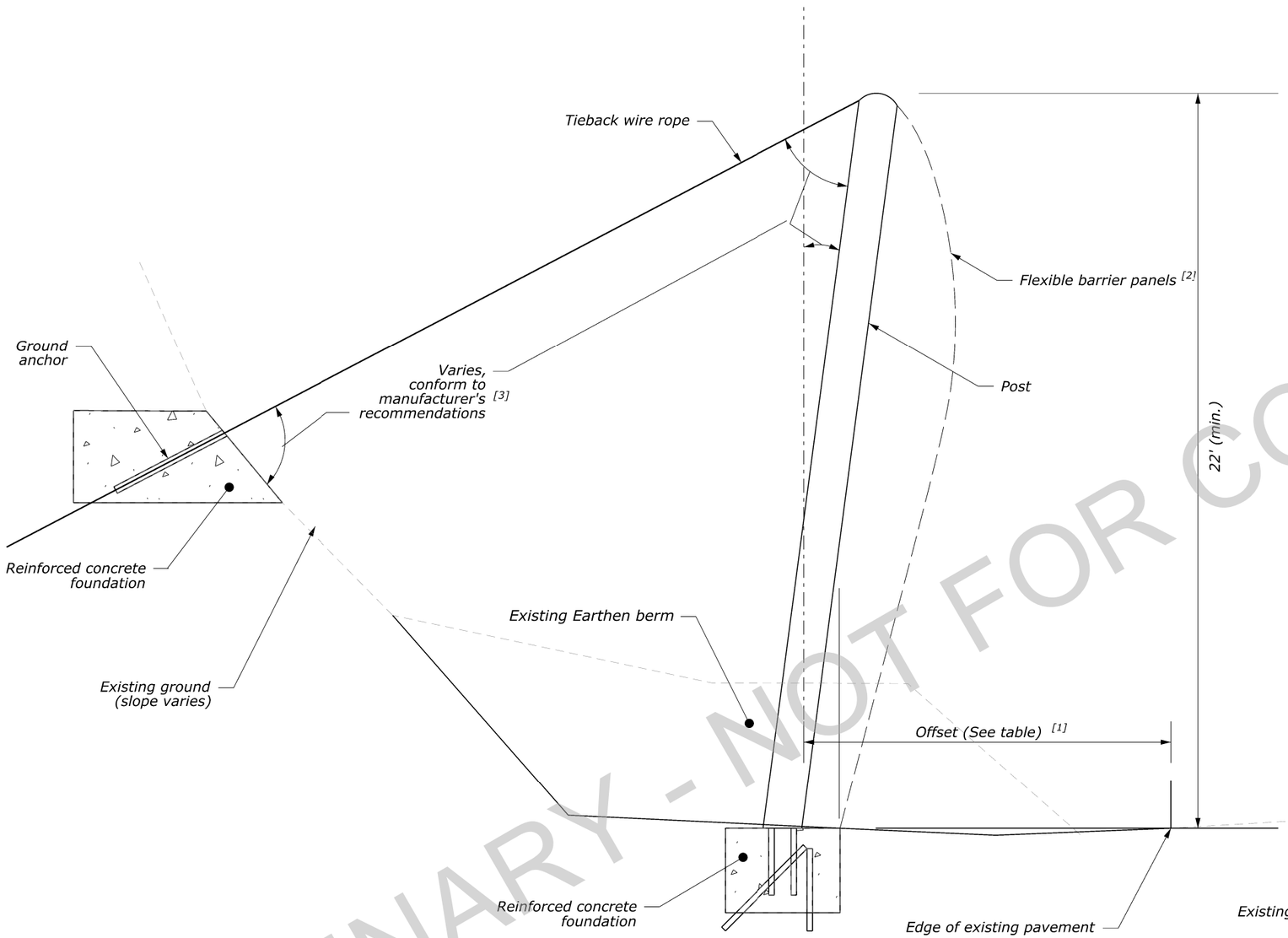

NOTE:

1. Install rockfall protection fence per manufacture's recommendations.
2. Details shown on this sheet are to convey system requirements only. Provide construction details based on contractor designed flexible rockfall protection fence system and recommendations of manufacturer of such system.
3. Treat all exposed elements with weathering agent according to Section 563.
4. Install flexible barrier, post support systems, anchors, and foundations according to manufacture design and recommendations.
5. Provide rockfall protection fence materials and workmanship in accordance with Section 265.
6. Do not install posts or tieback anchor rope in the exclusion zone shown on Sheet D.2. Do not install tieback anchor ropes in the soil nail wall.
7. Limit tree and vegetation to the minimum required for the installation of the rockfall protection fence.

FOOTNOTE:

[1] Horizontal from edge of existing pavement.

[2] Place double-twist wire mesh backing on impact side of flexible barrier panels. Attach double-twist wire mesh on 12-center horizontally and vertically using double-twist wire mesh fasteners.

[3] Vary the length and angle of the post tieback wire ropes as needed to install the tiebacks to provide a minimum vertical and horizontal clearance of 15 feet for maintenance equipment to pass under the tieback wire ropes and behind the barrier system.

ROADSIDE ROCKFALL PROTECTION, FENCE TYPICAL SECTION

MINIMUM VERTICAL HEIGHT (FT)	MINIMUM ENERGY LEVEL CLASSIFICATION (kj)	OFFSET FROM EOP (FT)	MAXIMUM ELONGATION AT THE SERVICE ENERGY LEVEL (SEL)
22	8000	18	18

ROCKFALL PROTECTION FENCE SECTION AND DETAILS

PRELIMINARY - NOT FOR CONSTRUCTION

c:\pw_workdir\jacobs-amer-transp\d0311264\WA-OLYM01208_hb.dgn [ROCKFALL PROTECTION FENCE SECTION AND D
12 June 2026 11:38 AM

NPS PMIS No.: 335141, NPS Drawing No.: OLYM 149/198715

PROJECT	SHEET NUMBER
WA NP OLYM 12(8)	I.2

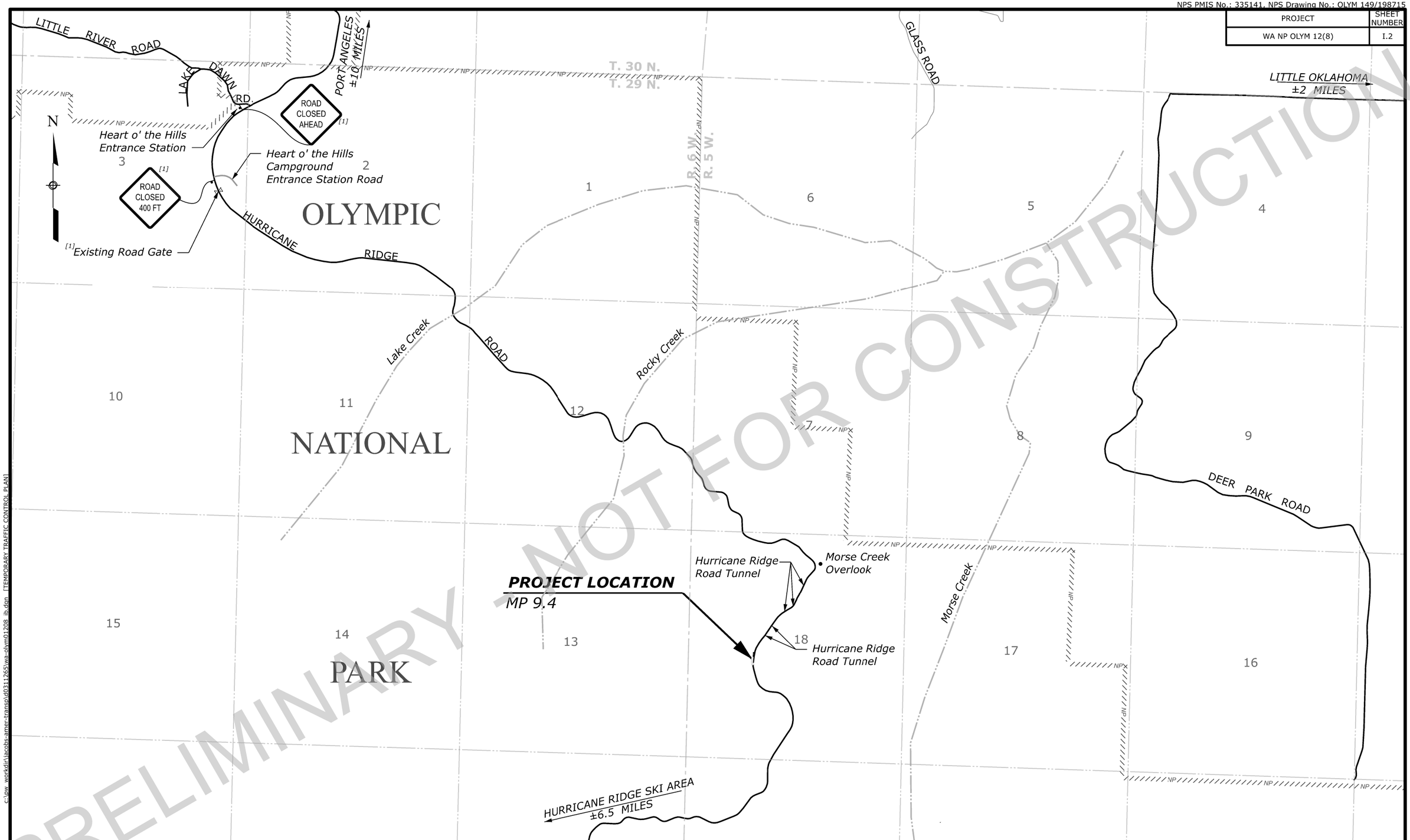

PRELIMINARY - NOT FOR CONSTRUCTION

FOOTNOTE:

[1] Close the existing gate to public traffic during excavation and scaling operations.

Scale in miles

0 1/4 1/2 1

TEMPORARY TRAFFIC CONTROL PLAN

c:\pw_workdir\jacobs-amer-transp\d0311265\wa-olym01208_ib.dgn [TEMPORARY TRAFFIC CONTROL PLAN]
11 June 2026 1:27 PM

PROJECT	SHEET NUMBER
WA NP OLYM 12(8)	I.3

SIGN SPACING TABLE			
ROAD TYPE	DISTANCE BETWEEN SIGNS IN FEET		
	A	B	C
Urban and Rural 30 mph and less	100	100	100
Urban and Rural 35 mph to 50 mph	350	350	350
Rural greater than 50 mph	500	500	500
Expressway / Freeway	1000	1500	2640

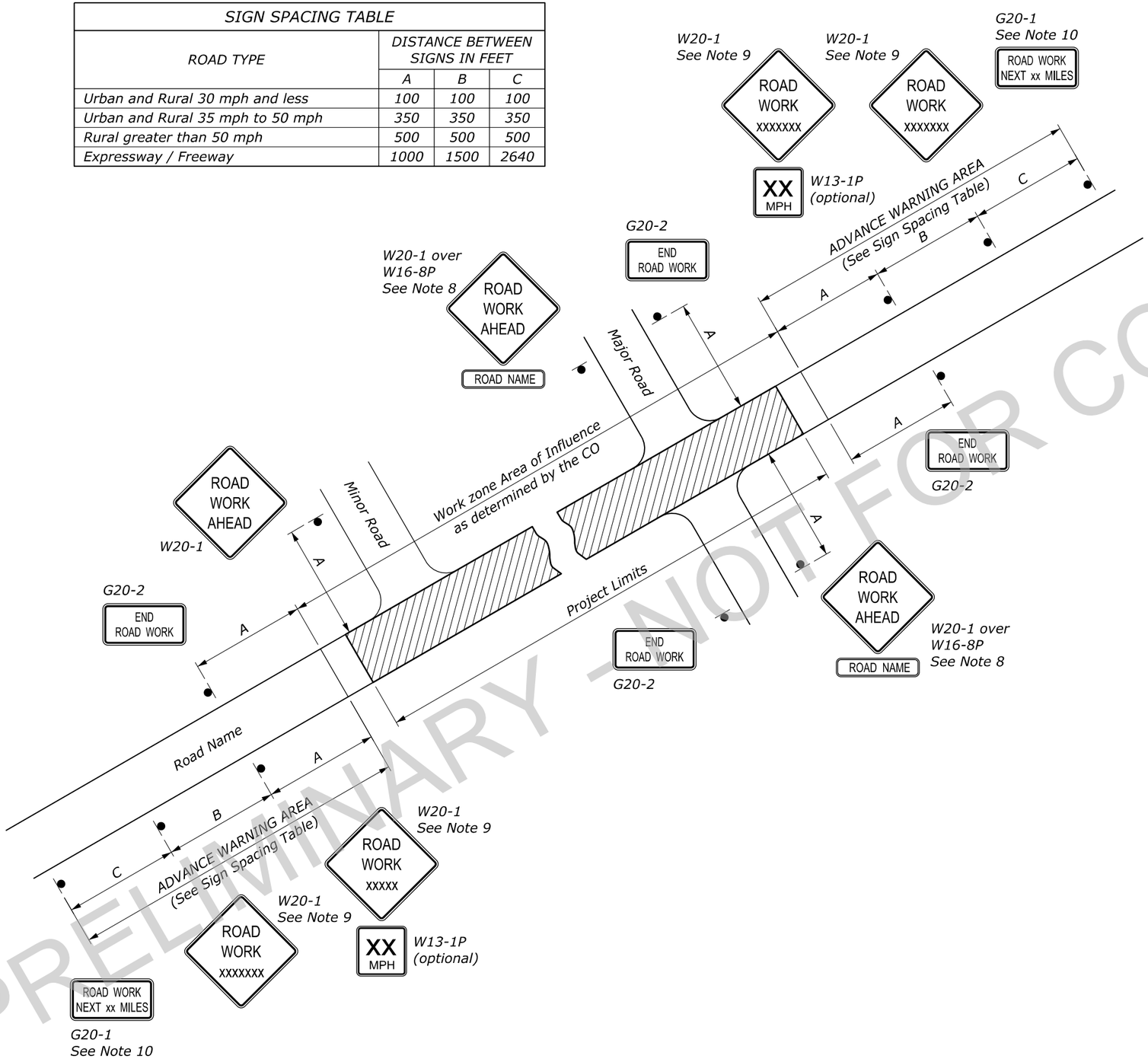

NOTE:

1. Erect all project advance warning signs before starting construction work.
2. Not all details shown on the temporary traffic control sheets may be applicable to this project. The Contractor may add or delete information and details in this traffic control plan as necessary to accommodate actual operations.
3. Where advance warning signs, placed as shown, interfere with permanent signs, locate the warning signs to fit field conditions as approved. Vary messages as required.
4. Install advisory speed plaques under the W20 series warning signs as needed to indicate a maximum recommended speed through the construction area.
5. Ensure all sign supports exposed to traffic are crashworthy.
6. Maintain two-way traffic during all non-work hours except as approved.
7. Do not store traffic control devices along the roadway when not in use. Cover post-mounted signs when not applicable.
8. If W20-1 is placed on a roadway other than that on which the actual construction work occurs, include a supplementary plaque indicating the name of the road on which the construction does occur (applies to major roads only).
9. The message on the W20-1 signs may be ROAD WORK AHEAD or may specify the distance to the work area in feet or in miles. Install an additional W20-1 sign when approach speeds exceed 50 mph. When used, place the two W20-1 signs "B" feet apart according to the Sign Spacing Table.
10. For work zones that are 2 miles or more in length, install G20-1 signs at each end of the project. Show the distance on the G20-1 sign to the nearest whole mile.
11. If signing on a roadway under a jurisdiction other than the client agency, verify that an encroachment permit has been obtained.
12. State standards may be used as an alternative if approved.

PRELIMINARY - NOT FOR CONSTRUCTION

c:\pw-work\dms00753\Std635-1.dgn [Std 635-1]
3 June 2024 9:44 AM

NO SCALE

U.S. DEPARTMENT OF TRANSPORTATION, FHWA OFFICE OF FEDERAL LANDS HIGHWAY	FLH STANDARD 635-1
TEMPORARY TRAFFIC CONTROL ADVANCE SIGNING	SPECIFICATION FP-24, FP-14
	APPROVED FOR USE 2/2024

PROJECT	SHEET NUMBER
WA NP OLYM 12(8)	I.4

LENGTH AND SPACING TABLE				
APPROACH SPEED* MPH	BUFFER SPACE LENGTH FEET	CHANNELIZING DEVICE SPACING IN FEET		
		TAPER AREA	BUFFER SPACE	WORK SPACE
20	115	20	40	40
25	155	20	50	50
30	200	20	60	60
35	250	20	70	70
40	305	20	80	80
45	360	20	90	90
50	425	20	100	100
55	495	20	110	110
60	570	20	120	120
65	645	20	130	130
70	730	20	140	140

* Approach speed based on the regulatory posted speed, not the advisory speed.

SIGN SPACING TABLE			
ROAD TYPE	DISTANCE BETWEEN SIGNS IN FEET		
	A	B	C
Urban and Rural 30 mph and less	100	100	100
Urban and Rural 35 mph to 50 mph	350	350	350
Rural greater than 50 mph	500	500	500
Expressway / Freeway	1000	1500	2640

NOTE:

1. Signs are shown for one direction of travel only. Place signs similar to those depicted for the opposite direction of travel.
2. A single signal installation is acceptable, on the right-hand side of the road, if it has two signal faces that are at least 8 feet apart and meets the other requirements of the MUTCD.
3. Install and operate temporary traffic control signals in accordance with the requirements of the MUTCD. Establish signal timing using a qualified engineer. When the signal is changed to the flashing mode either manually or automatically, ensure red signal indications are flashed to both approaches.
4. Final location and spacing of devices may be changed to fit field conditions as approved. If signals are moved, determine revised signal timing using a qualified engineer.
5. For paved roadway surfaces, install stop lines complying with the MUTCD. Remove existing conflicting pavement markings and raised markers between the work space and the stop line. Add no-passing lines in advance of the stop line that comply with the MUTCD. Removable pavement markings may be used for stop lines and no-passing pavement markings.
6. If closure is completely within the project limits, eliminate the ROAD WORK AHEAD (W20-1) and END ROAD WORK (G20-2) signs.
7. For project specific minimum width, refer to Special Contract Requirements, Section 156.
8. Do not allow equipment, materials, or vehicles to be parked or stored in the buffer space.

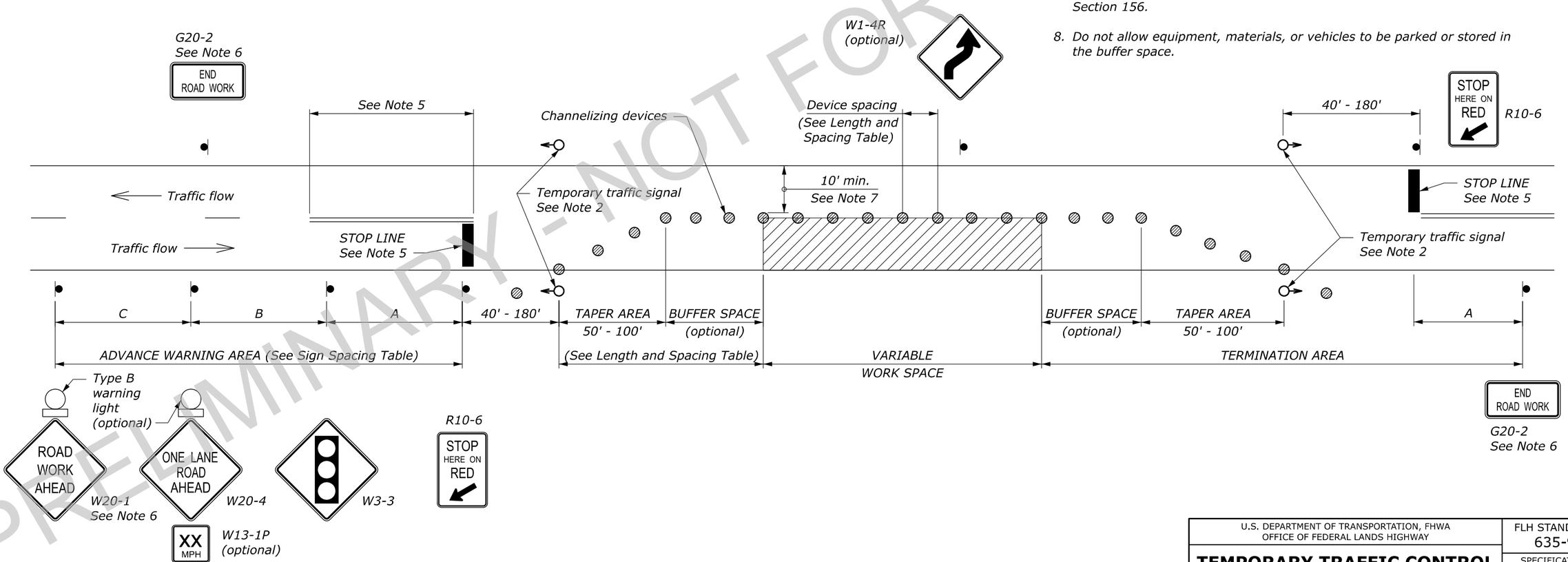

NO SCALE

U.S. DEPARTMENT OF TRANSPORTATION, FHWA OFFICE OF FEDERAL LANDS HIGHWAY	FLH STANDARD 635-9
TEMPORARY TRAFFIC CONTROL SINGLE LANE CLOSURE LAYOUT (WITH SIGNALS)	SPECIFICATION FP-24, FP-14
	APPROVED FOR USE 2/2024

PRELIMINARY - NOT FOR CONSTRUCTION

c:\pw-work\dms00753\Std635-9.dgn [Std 635-9]
3 June 2024 2:10 PM

PROJECT	SHEET NUMBER
WA NP OLYM 12(8)	I.5

LENGTH AND SPACING TABLE						
APPROACH SPEED* MPH	BUFFER SPACE LENGTH FEET	CHANNELIZING DEVICE SPACING IN FEET			CONCRETE BARRIER FLARE RATE	WORK ZONE CLEAR ZONE WIDTH FEET
		TAPER AREA	BUFFER SPACE	WORK SPACE		
20	115	20	40	40	1:8	10
25	155	20	50	50	1:8	10
30	200	20	60	60	1:8	10
35	250	20	70	70	1:9	10
40	305	20	80	80	1:10	15
45	360	20	90	90	1:12	20
50	425	20	100	100	1:14	20
55	495	20	110	110	1:16	20
60	570	20	120	120	1:16	30
65	645	20	130	130	1:16	30
70	730	20	140	140	1:16	30

* Approach speed based on the regulatory posted speed, not the advisory speed.

NOTE:

1. Install signs and other devices for single lane closure according to Standard 635-6, 7, 8, or 9. Final location and spacing of devices may be changed to fit field conditions as approved.
2. Place barrier according to the AASHTO Roadside Design Guide. Terminate barrier ends outside the work zone clear zone or protect the barrier ends with a crash cushion. Include reflectors on barrier at 25 ft intervals.
3. For project specific minimum width, refer to Special Contract Requirements, Section 156.
4. Do not allow equipment, materials, or vehicles to be parked or stored in the buffer space.

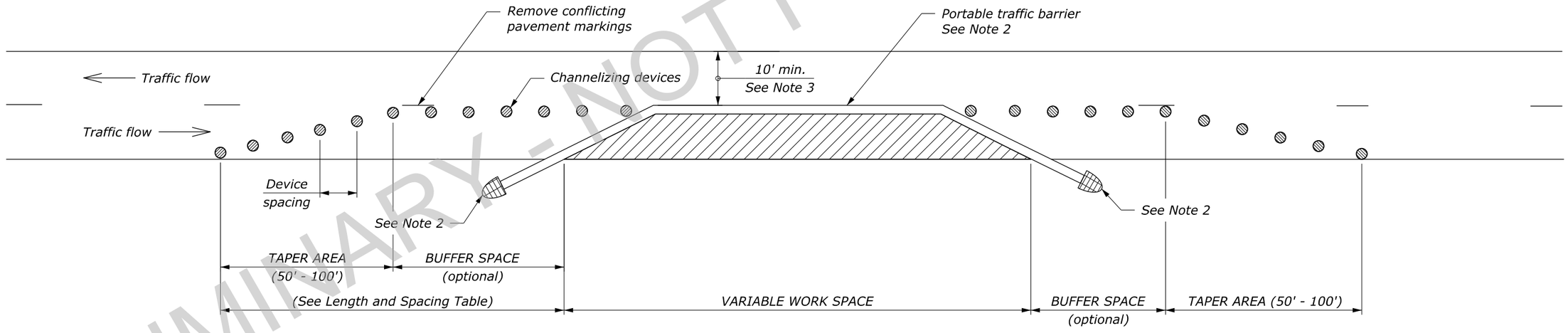

NO SCALE

U.S. DEPARTMENT OF TRANSPORTATION, FHWA OFFICE OF FEDERAL LANDS HIGHWAY	FLH STANDARD 635-13
TEMPORARY TRAFFIC CONTROL SINGLE LANE CLOSURE LAYOUT WITH TEMPORARY BARRIER	SPECIFICATION FP-24, FP-14
	APPROVED FOR USE 2/2024

PRELIMINARY - NOT FOR CONSTRUCTION

c:\pw-work\dms00753\Std635-13.dgn [Std 635-13]
3 June 2024 3:13 PM

PROJECT	SHEET NUMBER
WA NP OLYM 12(8)	I.6

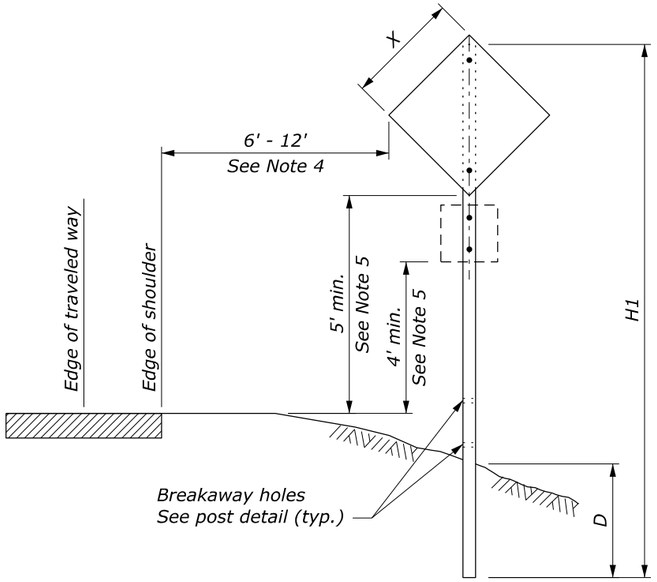

SINGLE POST SIGN

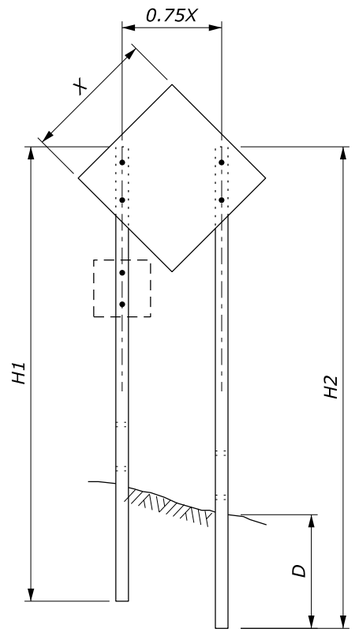

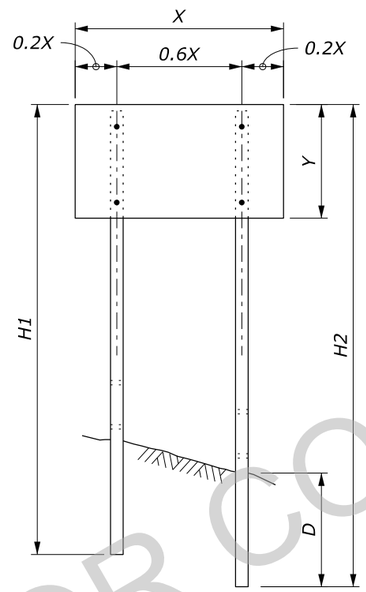

TWO POST SIGN

NOTE:

1. *Attach sign panels with a minimum of two ¼" diameter bolts per post.*
2. *H1 and H2 = Overall post length. Select post lengths to fit field conditions.*
3. *D = Post embedment depth for average soil conditions.*
4. *In areas where lateral distance is limited, a minimum lateral offset of 2 ft may be used. In areas with curbs, a minimum lateral distance of 1 ft behind the face of the curb may be used.*
5. *In pedestrian locations, or in areas with obstructed views, use 7 ft minimum mounting height for main sign and 6 ft minimum mounting height for secondary sign.*
6. *Use 7 ft minimum spacing between posts for sign posts 6" x 6" or larger.*
7. *State standards may be used as an alternative if approved.*

WOOD POST SELECTION TABLE

WIDTH "X"	AREA (SQFT)	NUMBER OF POSTS	POST SIZE (INCH)	D (INCH)	HOLE SIZE (INCH)
Diamond ≤ 36" Other Shapes ≤ 48"	< 10	1	4 x 4	36	0
		1	4 x 6	48	1.5
Diamond ≤ 48"	10 - 20	1	6 x 6	48	2
Diamond ≤ 48" Other Shapes ≤ 12'	10 - 20	2	4 x 4	36	0
	20 - 50	2	4 x 6	48	1.5
> 13'	50 - 65	2	6 x 6	48	2
12' - 16'	50 - 65	3	4 x 6	48	1.5
> 17'	65 - 95	4	4 x 6	48	1.5
> 30'	65 - 95	3	6 x 6	48	2

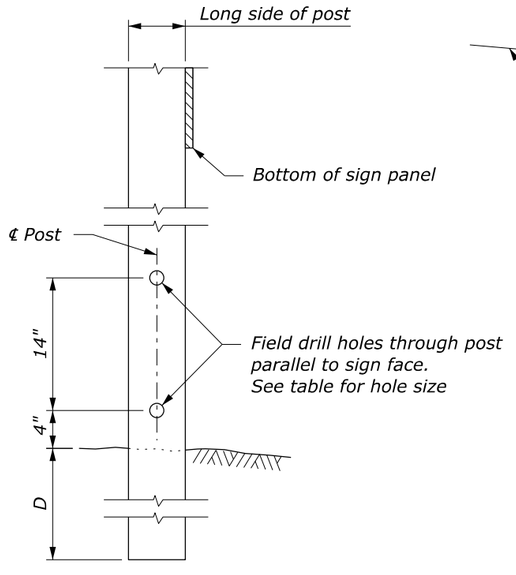

POST DETAIL

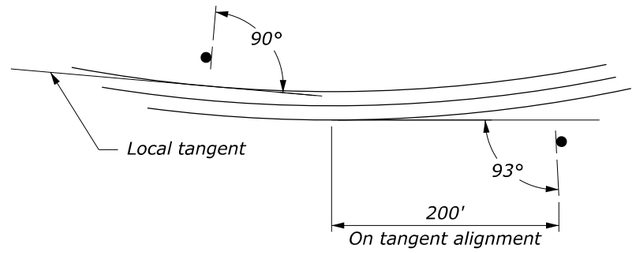

SIGN INSTALLATION ANGLE

NO SCALE

U.S. DEPARTMENT OF TRANSPORTATION, FHWA
OFFICE OF FEDERAL LANDS HIGHWAY

TEMPORARY TRAFFIC CONTROL SIGN INSTALLATION WOOD POSTS

FLH STANDARD	635-14
SPECIFICATION	FP-24, FP-14
APPROVED FOR USE	2/2024

PRELIMINARY - NOT FOR CONSTRUCTION

c:\pw-work\dms80753\Std635-14.dgn [Std 635-14]
3 June 2024 3:18 PM

PROJECT	SHEET NUMBER
WA NP OLYM 12(8)	J.1

PRELIMINARY - NOT FOR CONSTRUCTION

CONCRETE BARRIER QUANTITIES

ITEM	DESCRIPTION	UNIT	QUANTITY	NOTES
61801-0000	CONCRETE BARRIER (WSDOT TYPE F (PRECAST))	LNFT	200	Including 25' for removable closure on Maintenance road
61804-0000	TERMINAL SYSTEM, (WSDOT TYPE F (PRECAST) TERMINAL)	EACH	2	
61805-0000	REMOVE AND RESET BARRIER	LNFT	125	Place existing concrete barrier behind roadside rockfall protection fence

PERMANENT SIGN QUANTITIES

NORTHING	EASTING	SIDE OF MAIN ROAD	MUTCD NO.	MESSAGE	NO. OF POSTS	PANEL DIMENSIONS W X H (IN. x IN.)	ITEM 63302-0000 SIGN SYSTEM (SQFT)	REMARKS
377296.21	1018104.17	RT	W8-14	FALLEN ROCKS	1	30 x 30	6.25	Mounted on same post
			R7-4a	NO STOPPING ANY TIME		12 x 18	1.50	
377408.64	1018101.71	RT	R7-1	NO PARKING ANY TIME	1	12 x 18	1.50	
377454.64	1018069.17	LT	R7-1	NO PARKING ANY TIME	1	12 x 18	1.50	
377712.20	1018130.23	RT	R7-1	NO PARKING ANY TIME	1	12 x 18	1.50	
377739.54	1018100.05	LT	R7-1	NO PARKING ANY TIME	1	12 x 18	1.50	
377808.61	1018122.78	LT	W8-14	FALLEN ROCKS	1	30 x 30	6.25	Mounted on same post
			R7-4a	NO STOPPING ANY TIME		12 x 18	1.50	
						TOTAL	**21.50**	

NOTE:
1. See sheet J.2 for concrete barrier and proposed sign locations.
2. Adjust sign location per CO recommendations.

TABULATION OF PERMANENT TRAFFIC CONTROL QUANTITIES

c:\pw_workdir\jacobs-amer-transp\d0311266\wa-olym01208_ja.dgn [TABULATION OF PERMANENT TRAFFIC CONTROL QUANTITIES]
30 June 2026 12:12 PM

PROJECT	SHEET NUMBER
WA NP OLYM 12(8)	J.2

PRELIMINARY - NOT FOR CONSTRUCTION

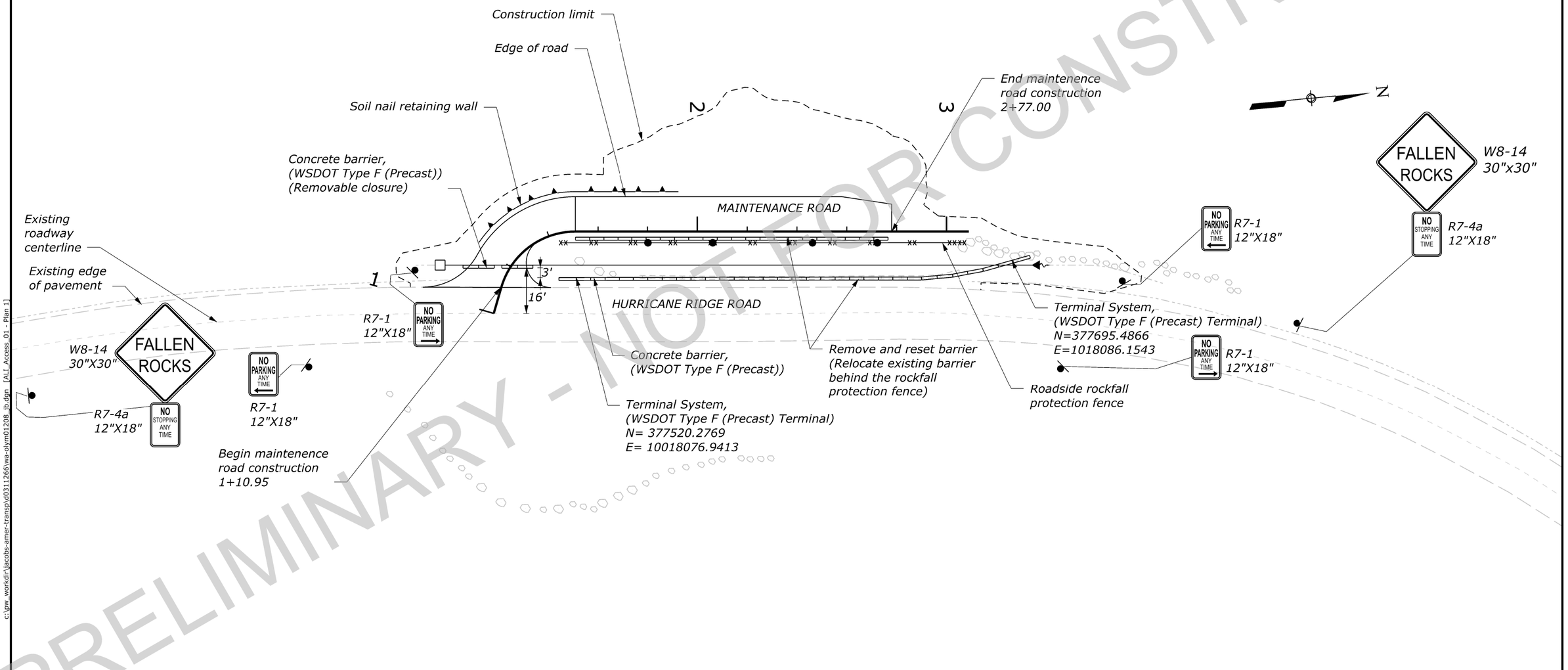

NOTE:
1. See Section G for Soil nail wall detail.
2. See Section H for Roadside rockfall prodection, fence details.

PERMANENT TRAFFIC CONTROL PLAN

c:\pw_workdir\jacobs-amer-transp\d0311266\wa-olym01208_jb.dgn [ALL Access_01 - Plan 1]
30 June 2026 12:18 PM

PROJECT	SHEET NUMBER
WA NP OLYM 12(8)	J.3

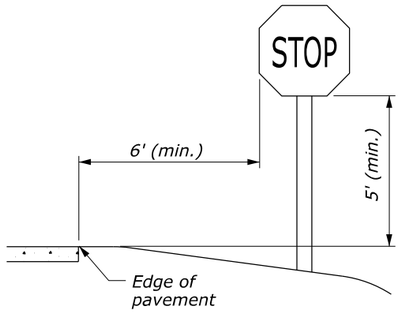

WITHOUT SHOULDER

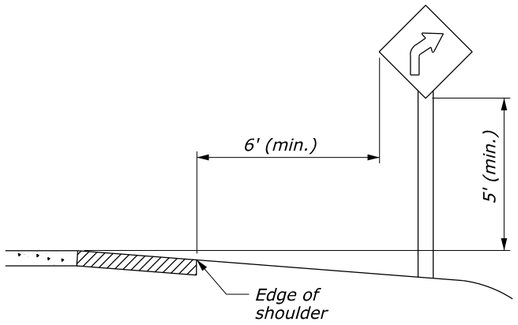

WITH SHOULDER

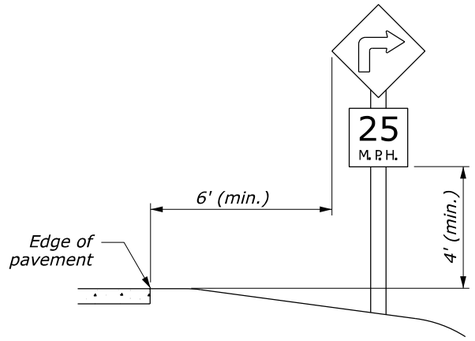

WITH ADVISORY SPEED PLAQUE

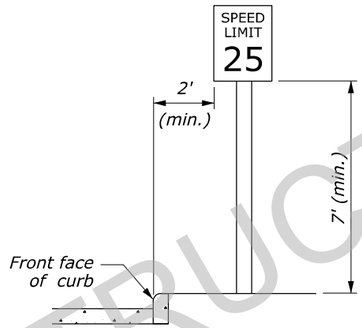

ROADSIDE SIGN IN BUSINESS OR RESIDENTIAL DISTRICT

ROADSIDE SIGN IN RURAL DISTRICT

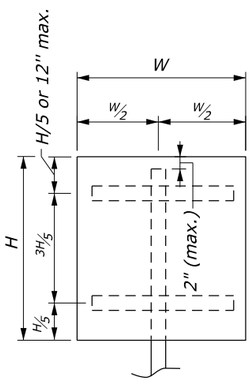

SINGLE POST

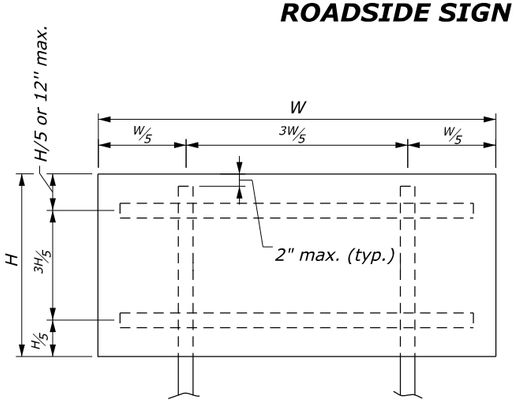

DOUBLE POST

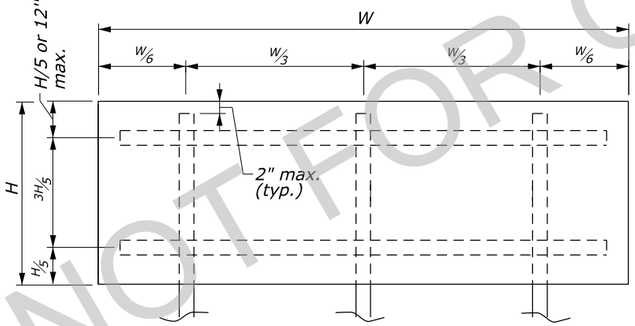

TRIPLE POST

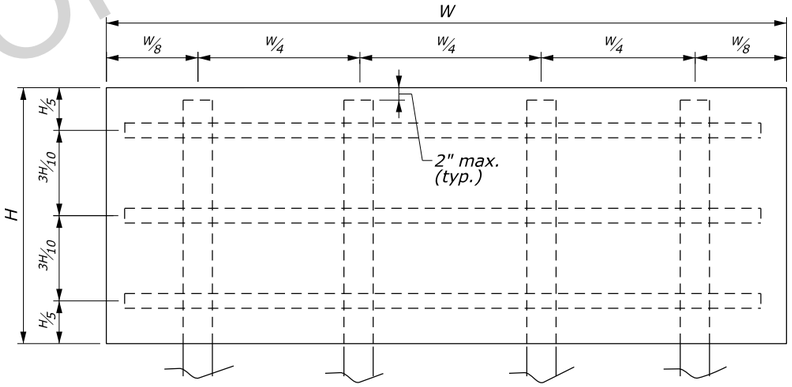

QUADRUPLE POST

NOTES:

1. Locate and set sign height according to the "Manual on Uniform Traffic Control Devices" (MUTCD), latest edition.
2. For U-channel, square tubular, and corrosion resistant steel posts for which the sign panel area is 10 square feet or less but W is over 4 feet, use double posts.
3. For square tabular steel double posts for which the sign panel area is equal to 24 square feet, use slip base according to manufacturer's recommendations.
4. Refer to Detail E633-02 for breakaway support details for corrosion resistant steel posts.
5. Refer to Detail E633-03 for breakaway support details for wood, U-channel steel and square tubular steel posts.
6. Refer to Detail E633-04 for bracing details for wood, U-channel steel and square tubular steel posts.
7. Refer to Section 2A.18 of the MUTCD, latest edition, for additional information.

POST SIZE TABLE

POST TYPE	POST SIZE	MAXIMUM SIGN AREA (SQFT)			
		SINGLE POST	DOUBLE POST	TRIPLE POST	QUADRUPLE POST
Wood	4" x 4"	10	20		
	4" x 6"	15	35	45	60
	6" x 6"	20	50	75	100
U-Channel Steel		10*	24	30	
Square Tubular Steel	2" 12 ga.	10*	16		
	2" 12 ga.	10*	24**		
Corrosion Resistant Steel	2" x 2" 10 ga. Class B	10*	24		

* See Note 2
** See Note 3

NO SCALE

U.S. DEPARTMENT OF TRANSPORTATION, FHWA
OFFICE OF FEDERAL LANDS HIGHWAY

SIGN STRUCTURES

EFLHD DETAIL
E633-01

SPECIFICATION
FP-24, FP-14

APPROVED FOR USE
06/2024

PRELIMINARY - NOT FOR CONSTRUCTION

M:\Standards_and_Details\EFLHD_Detail-Drawings\FP-24\633-Permanent Traffic Control\st63301_detail.dgn [Sheet]
21 June 2024 3:46 PM

PROJECT	SHEET NUMBER
WA NP OLYM 12(8)	J.4

WOOD POST DATA TABLE		
POST SIZE	HOLE DIAMETER	(D) (MIN.)
4'' x 4''	Not Required	3'
4'' x 6''	1.5''	4'
6'' x 6''	2''	4'

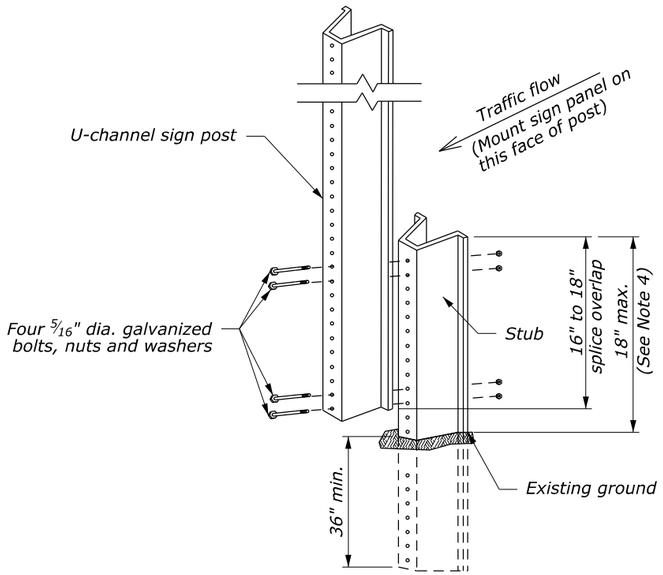

U-CHANNEL STEEL POST

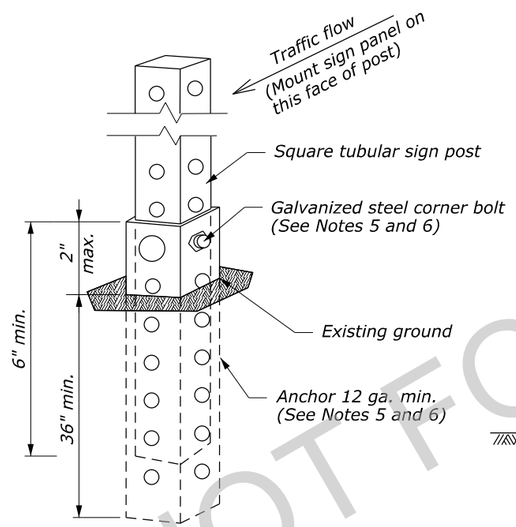

SQUARE TUBULAR STEEL POST

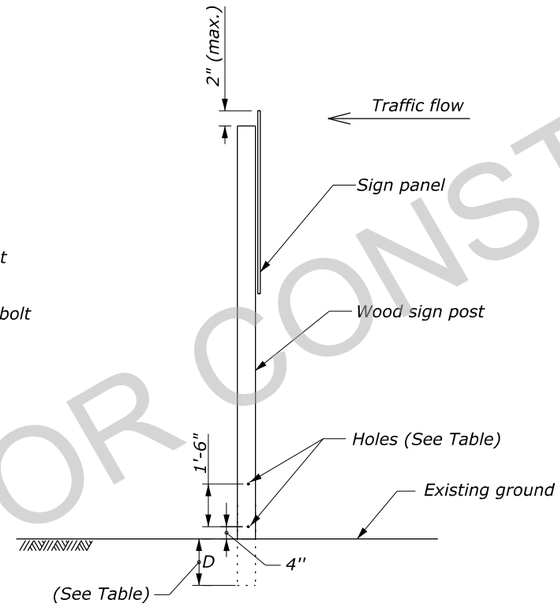

WOOD POST

BREAKAWAY SIGN SUPPORT

NOTES:

1. Breakaway sign support is not required for signs placed behind protective barriers.
2. Signs requiring 6- by 6-inch wood posts are considered to be non-breakaway if multiple posts are required and posts cannot be spaced a minimum of 7 feet apart.
3. Place non-breakaway signs outside the clear zone or shield with approved barrier. Do not place holes in posts of non-breakaway signs.
4. Position splice overlap on U-channel steel posts entirely between the ground line and 18 inches above the ground line. Do not place more than one splice per post.
5. Attach the square tubular steel post to the anchor with a corner bolt according to the manufacturer's recommendations. Size the anchor according to the manufacturer's recommendations to accept the post size specified.
6. Maintain the post assembly in a plumb position.
7. For sign punching details, see the blank standards in the "Standard Highway Signs and Markings" as specified in the latest edition of the MUTCD.
8. Refer to Detail E633-01 for sign mounting details.
9. Refer to Detail E633-04 for sign bracing details.
10. Refer to Section 2A.18 of the MUTCD, latest edition, for additional information.

PRELIMINARY - NOT FOR CONSTRUCTION

M:\Standards_and_Details\EFLHD_Detail-Drawings\FP-24\633-Permanent Traffic Control\st63303_detail.dgn [Sheet]
21 June 2024 4:03 PM

NO SCALE

U.S. DEPARTMENT OF TRANSPORTATION, FHWA OFFICE OF FEDERAL LANDS HIGHWAY	EFLHD DETAIL E633-03
BREAKAWAY SIGN SUPPORT WOOD AND STEEL POSTS	SPECIFICATION FP-24, FP-14
	APPROVED FOR USE 06/2024

PROJECT	SHEET NUMBER
WA NP OLYM 12(8)	J.5

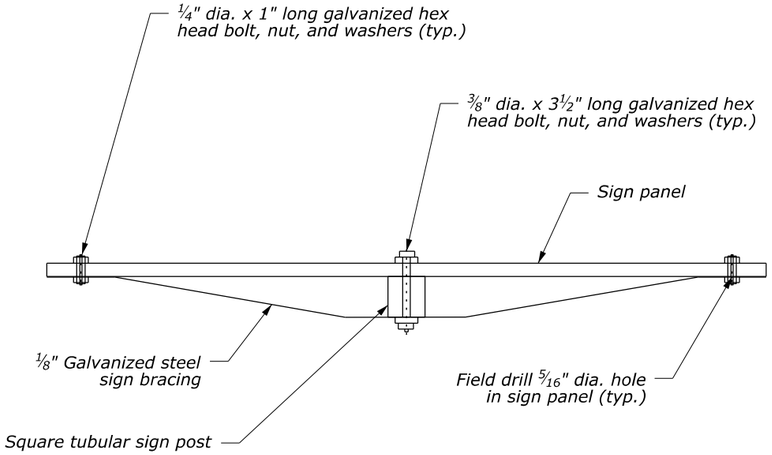

SQUARE TUBULAR STEEL POST

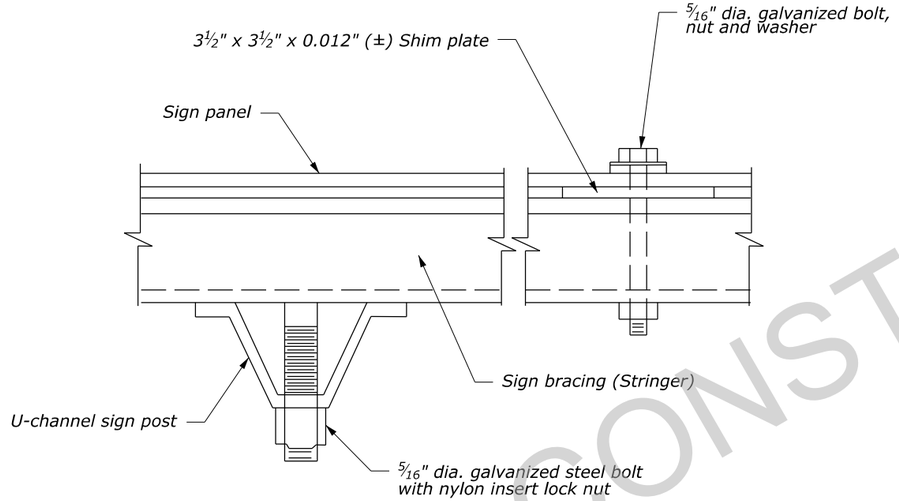

U-CHANNEL STEEL POST

NOTES:

1. Install sign braces on signs with widths of 48 inches or greater. Install sign braces on signs with widths of 36 inches when specified or as directed.
2. For sign punching details, see the blank standards in the "Standard Highway Signs and Markings" as specified in the latest edition of the MUTCD.
3. Use wood battens bolted to post at vertical spacings not to exceed 30 inches.
4. Use neoprene or nylon washers between the sign panel's retroreflective sheeting and the steel washer.
5. Refer to Detail E633-01 for sign mounting details.
6. Refer to Section 2A.18 of the MUTCD, latest edition, for additional information.

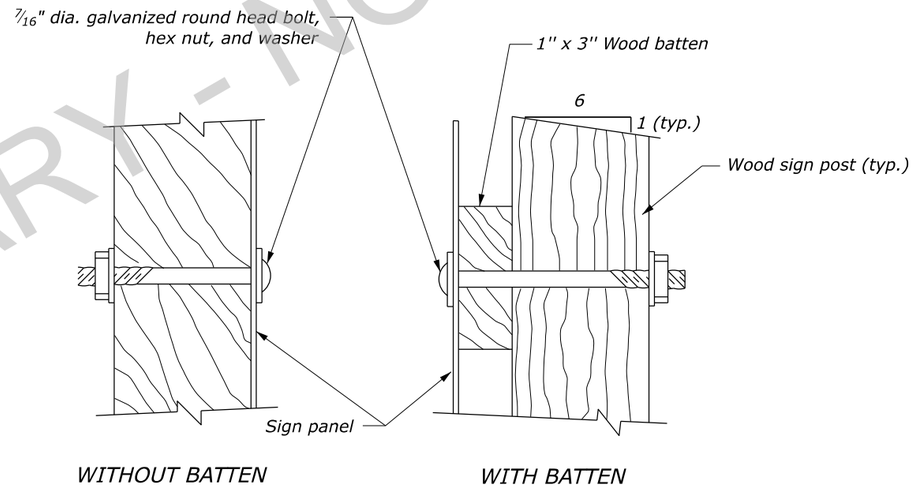

WOOD POST

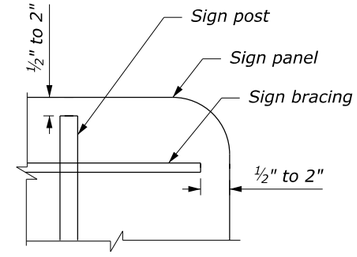

BRACING INSTALLATION TOLERANCES

NO SCALE

U.S. DEPARTMENT OF TRANSPORTATION, FHWA OFFICE OF FEDERAL LANDS HIGHWAY	EFLHD DETAIL E633-04
SIGN BRACING	SPECIFICATION FP-24, FP-14
	APPROVED FOR USE 06/2024

PRELIMINARY - NOT FOR CONSTRUCTION

21 June 2024 4:07 PM M:\Standards_and_Details\EFLHD_Detail-Drawings\FP-24\633-Permanent Traffic Control\st633004_detail.dgn [Sheet]

PROJECT	SHEET NUMBER
WA NP OLYM 12(8)	J.6

PRELIMINARY - NOT FOR CONSTRUCTION

30 June 2026 1:07 PM c:\pw_workdir\jacobs-amer-transpt\d0311266\wa-olym01208_id.dgn [TABULATION OF PERMANENT TRAFFIC CONTROL QUANTITIES]

NOTES:

1. Concrete for Barrier Type F (Precast) shall be Class 5000.
2. The reinforcing steel details for the NARROW BASE barrier are the same as those shown for the 24" (in) wide barrier except for the stirrup bars (see Stirrup Bar Narrow Base Detail), Bar - 6 runs along the vertical face of the narrow base barrier with a 1 1/2" (in) clearance.
3. Type F barrier can be placed on horizontal curves with a radius of 150 feet or greater.

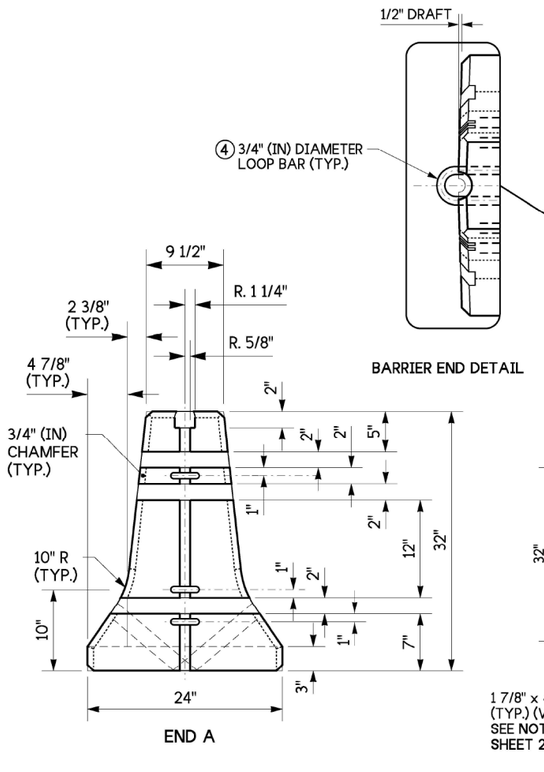

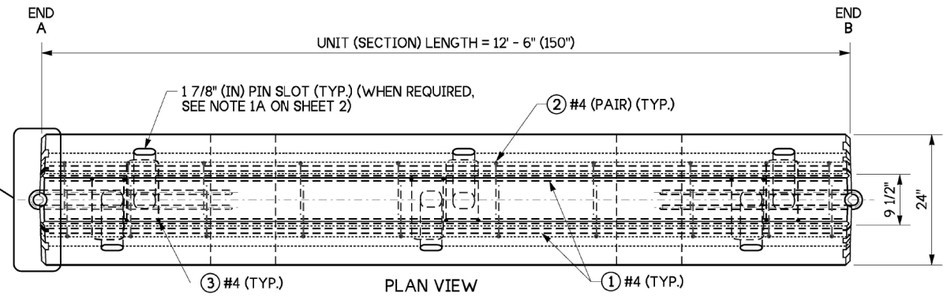

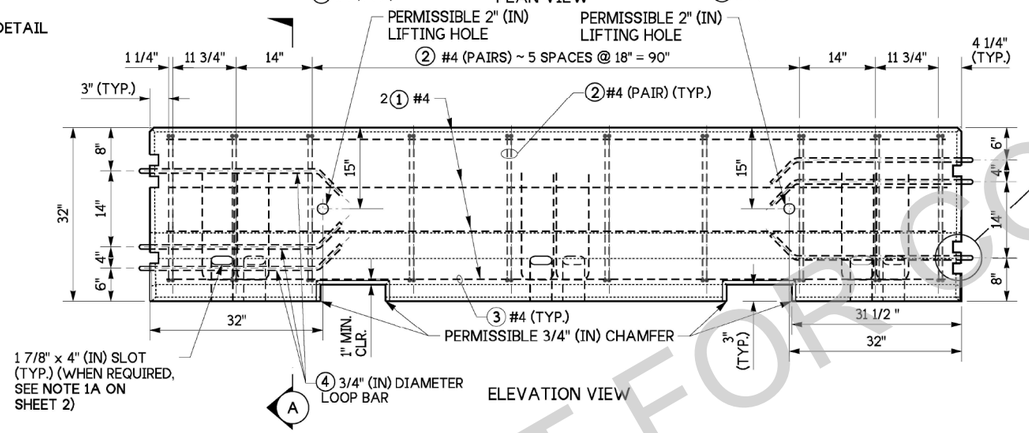

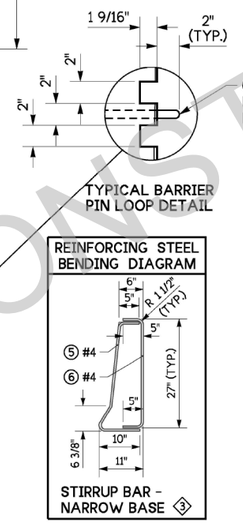

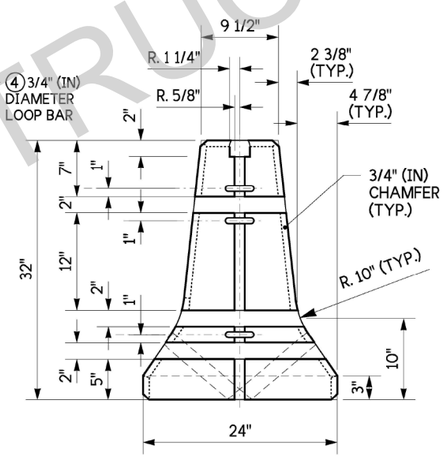

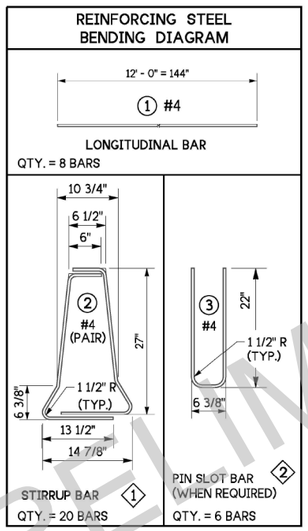

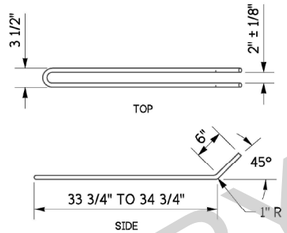

④ 3/4" (IN) DIAM. LOOP BAR PER ASTM A36 HOT ROLL HOT DIP GALVANIZE AFTER FABRICATION PER AASHTO M111.

KEY NOTES:

STEEL WELDED WIRE REINFORCEMENT DEFORMED FOR CONCRETE MAY BE SUBSTITUTED FOR REINFORCING STEEL IN ACCORDANCE WITH STANDARD SPECIFICATION SECTION 6-10.3

① ② STIRRUP BAR MAY BE FABRICATED AS A SINGLE PIECE

② ③ HOT DIP GALVANIZE AFTER FABRICATION PER ASTM A767

③ STIRRUP BAR - NARROW BASE MAY BE FABRICATED AS A SINGLE PIECE

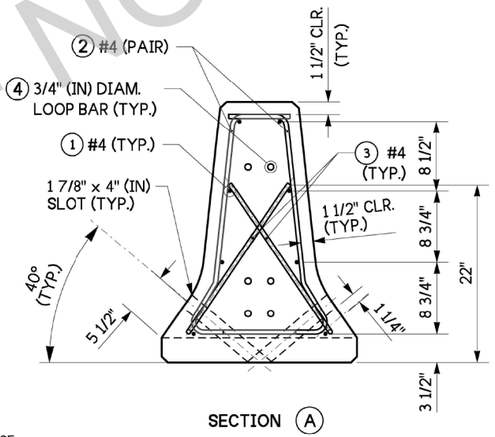

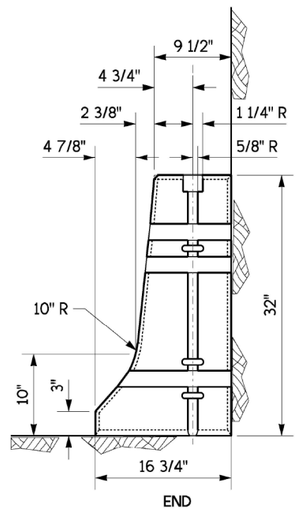

TIMOTHY J MOECKEL
STATE OF WASHINGTON
56294
REGISTERED PROFESSIONAL ENGINEER

Jul 18, 2024

CONCRETE BARRIER
TYPE F (PRECAST)

STANDARD PLAN C-60.10-04

SHEET 1 OF 2 SHEETS

APPROVED FOR PUBLICATION

Mark A Dains Jul 21, 2024

STATE DESIGN ENGINEER

Washington State Department of Transportation

CONCRETE BARRIER TYPE F (PRECAST)

Sheet 1 of 2

PROJECT	SHEET NUMBER
WA NP OLYM 12(8)	J.7

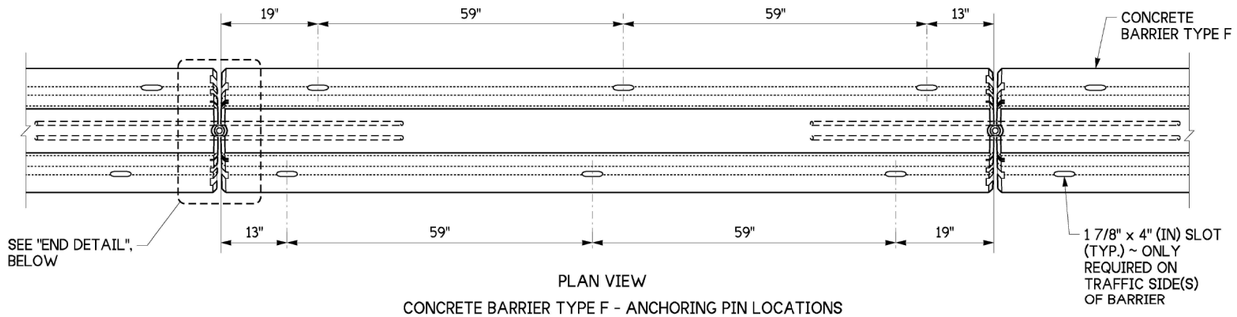

PLAN VIEW

CONCRETE BARRIER TYPE F - ANCHORING PIN LOCATIONS

NOTES: (Anchoring and Joining Barrier)

1. Precast Concrete Barrier Type F can be installed in the following configurations:

   A. Unanchored on hot mix asphalt (HMA), or cement concrete pavement in permanent or temporary installations, and on compacted soil in temporary installations. It is permissible to manufacture theType F barrier without pin slots and pin slot bars when barrier is not anchored.
   B. Anchored on hot mix asphalt (HMA) or cement concrete pavement in permanent or temporary installations as shown on this plan. See **Standard Plans K-80.35 and K-80.37** for anchoring Type F Narrow Base in temporary installations on cement concrete pavement or bridge decks.

2. See **Standard Plan C-60.70** for anchoring patterns when transitioning from Type F anchored runs to another type of barrier run.

3. After removing the anchoring pins, clean the pin holes and fill them with sealant according to **Std. Specification Section 9-04.2.**

4. Remove slack between barrier segments after inserting the connecting pin.

5. Connecting Pin head designs vary among different Mfrs. Pins designs that are shaped differently than those shown in the details are acceptable if the bearing surface is within the minimum and maximum widths specified.

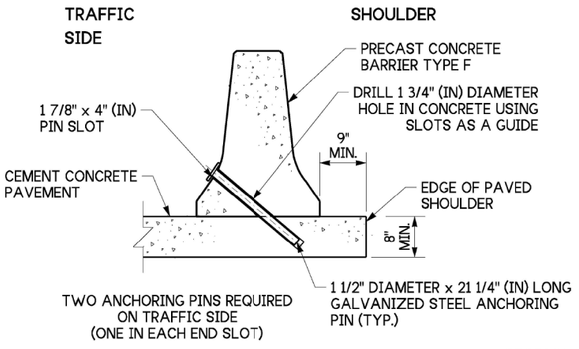

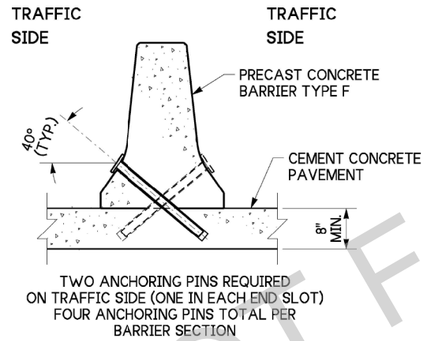

SECTION VIEWS

CONCRETE ANCHORING PIN LOCATIONS

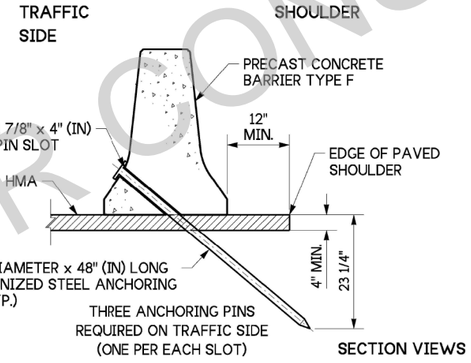

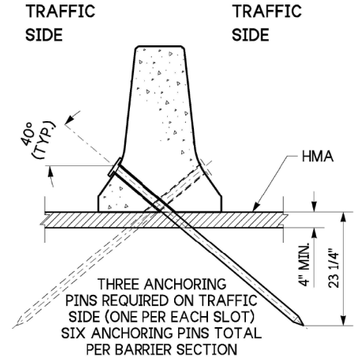

SECTION VIEWS

HMA ANCHORING PIN LOCATIONS

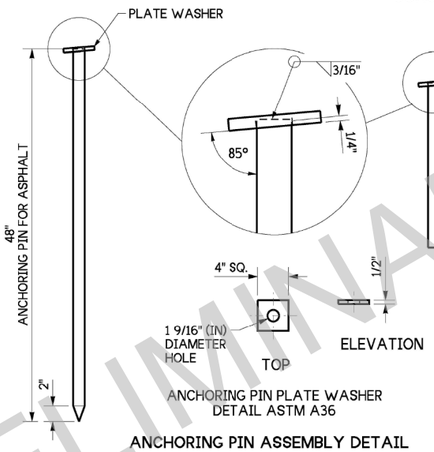

ANCHORING PIN ASSEMBLY DETAIL

1 1/2" (IN0 DIAMETER PER ASTM A36, HOT ROLL, HOT DIP GALVANIZE AFTER FABRICATION PER ASTM F2329

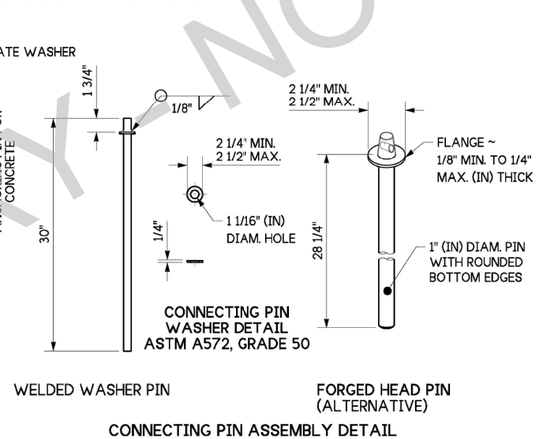

CONNECTING PIN ASSEMBLY DETAIL

(SEE NOTE 5)
1" (IN) DIAMETER PER ASTM A449
HOT DIP GALVANIZE AFTER FABRICATION PER ASTM F2329

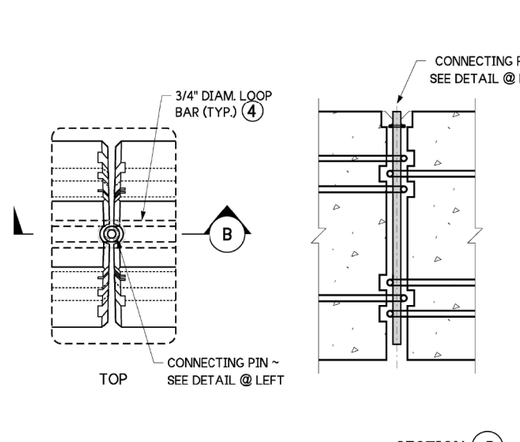

END DETAIL

JOINING TWO BARRIER SEGMENTS

SECTION (B)

(SEE NOTE 4)

TIMOTHY J MOECKEL
STATE OF WASHINGTON
56294
REGISTERED
PROFESSIONAL ENGINEER

Jul 18, 2024

CONCRETE BARRIER TYPE F (PRECAST)

STANDARD PLAN C-60.10-04

SHEET 2 OF 2 SHEETS

APPROVED FOR PUBLICATION

Mark A Reaves Jul 21, 2024

STATE DESIGN ENGINEER

Washington State Department of Transportation

PRELIMINARY - NOT FOR CONSTRUCTION

c:\pw_workdir\jacobs-amer-transp\d0311266\wa-olym01208_jd.dgn [TABULATION OF PERMANENT TRAFFIC CONTROL QUANTITIES -2]
30 June 2026 12:38 PM

CONCRETE BARRIER TYPE F (PRECAST)

Sheet 2 of 2

PROJECT	SHEET NUMBER
WA NP OLYM 12(8)	J.8

DRAWN BY: BILL BERENS

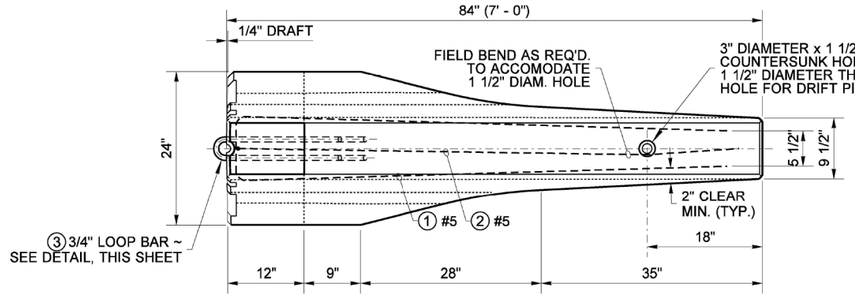

TOP

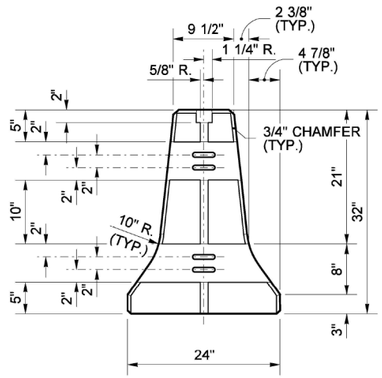

END

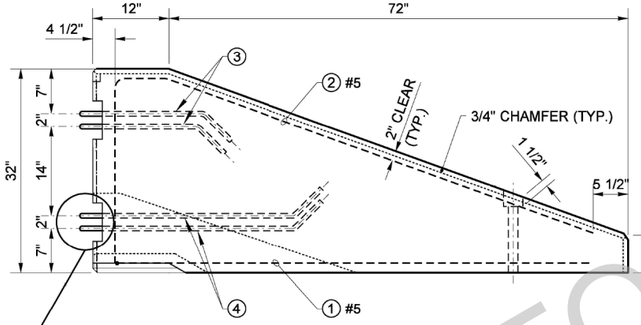

FRONT

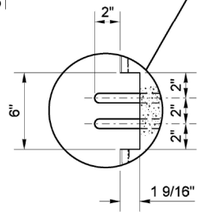

TYPICAL SLOT DETAIL

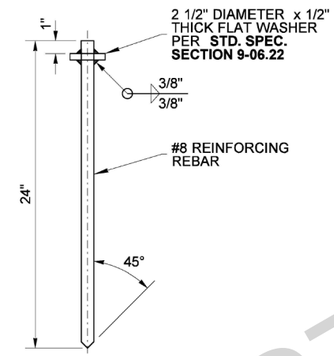

DRIFT PIN DETAIL

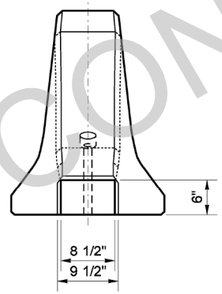

END

NOTES

1. Concrete shall be Class 5000.
2. Remove slack between barrier segments after inserting the connecting pin.
3. Provide 2" minimum concrete cover over reinforcing steel, except for as noted on the plan.
4. Connecting Pin head designs vary among different manufacturers. Pin designs that are shaped differently than those shown in the detail are acceptable, if the bearing surface is within the minimum and maximum widths specified.

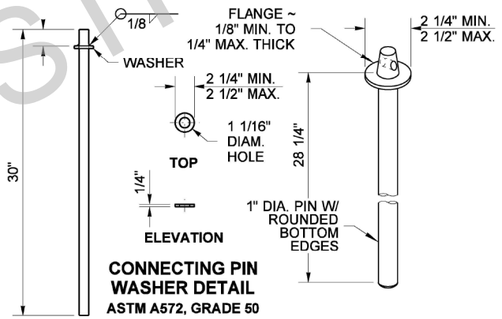

CONNECTING PIN WASHER DETAIL
ASTM A572, GRADE 50

WELDED WASHER PIN — FORGED HEAD PIN (ALTERNATIVE)
SEE NOTE 4

CONNECTING PIN ASSEMBLY DETAIL
1" DIAMETER PER **ASTM A449**
HOT DIP GALVANIZE AFTER FABRICATION PER **ASTM F2329**

REINFORCING STEEL BENDING DIAGRAM

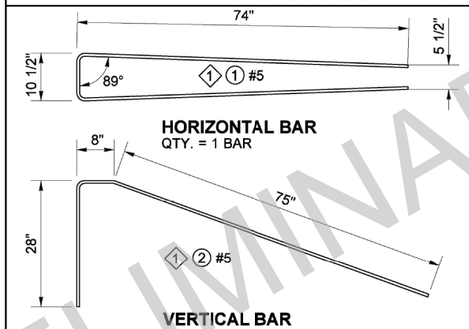

NOTE
① Field bend as required.

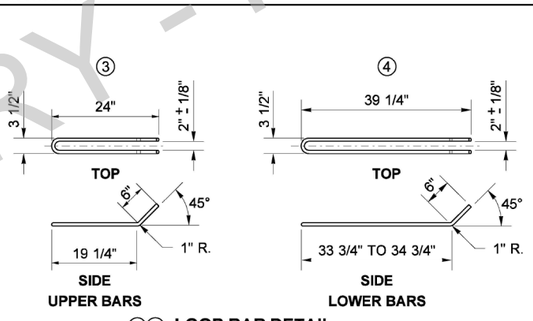

③④ **LOOP BAR DETAIL**
3/4" DIAM. LOOP BAR PER **ASTM A36**, HOT ROLL
HOT DIP GALVANIZE AFTER FABRICATION PER **AASHTO M 111**
③ QTY. = 2 BARS ④ QTY. = 2 BARS

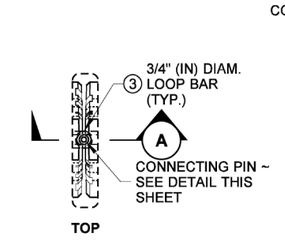

END DETAIL
JOINING TWO BARRIER SEGMENTS

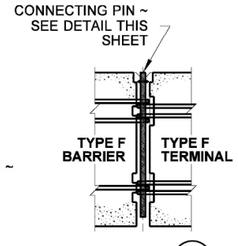

SECTION (A)
(SEE NOTE 2)

NOTE:
STEEL WELDED WIRE REINFORCEMENT DEFORMED FOR CONCRETE MAY BE SUBSTITUTED FOR REINFORCING STEEL IN ACCORDANCE WITH **STANDARD SPECIFICATION, SECTION 6-10.3**

TIMOTHY J. MOECKEL — STATE OF WASHINGTON — 56294 — REGISTERED PROFESSIONAL ENGINEER

Jul 19, 2024

CONCRETE BARRIER TYPE F (PRECAST) TERMINAL

STANDARD PLAN C-60.80-02

SHEET 1 OF 1 SHEET

APPROVED FOR PUBLICATION
Mark A Baires Jul 21, 2024
STATE DESIGN ENGINEER
Washington State Department of Transportation

PRELIMINARY - NOT FOR CONSTRUCTION

CONCRETE BARRIER
TYPE F (PRECAST) TERMINAL