U.S. DEPARTMENT OF AGRICULTURE
NATIONAL CENTER FOR COOL AND THE COLD-WATER AQUACULTURE

11861 LEETOWN ROAD
KEARNEYSVILLE, WV 25430

ROOF REPAIRS NCCCWA

CONTRACT NUMBER: 12305B23F01047

ANNE C. JURAN
REGISTERED
25001
STATE OF
WEST VIRGINIA
PROFESSIONAL ENGINEER
23 APRIL 2026

INDEX OF DRAWINGS

Sheet Number	Sheet Title
G-001	COVER
S-001	STRUCTURAL NOTES & DETAILS
S-002	WIND LOAD DIAGRAM
AD101	LAB ROOF DEMOLITION PLAN
AD102	LAB BUILDING DEMOLITION PLAN
A101	TANIK BUILDING ROOF PLAN
A102	LAB BUILDING ROOF PLAN
A103	PARTIAL ROOF PLANS - LAB BUILDING
A501	ROOF DETAILS - TANK BUILDING
A502	ROOF DETAILS - TANK BUILDING
A503	ROOF DETAILS - LAB BUILDING
A504	ROOF DETAILS - LAB BUILDING
A505	ROOF DETAILS - LAB BUILDING
A506	ROOF DETAILS - LAB BUILDING
A507	ROOF DETAILS - LAB BUILDING

ABBREVIATIONS, SYMBOLS & MATERIAL INDICATIONS

VICINITY MAP

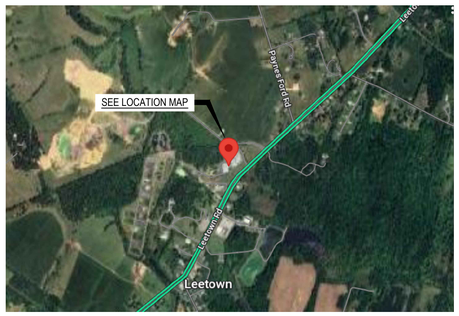

LOCATION MAP

NOTICES

BIOSECURITY MUST BE FOLLOWED WHEN OPERATING IN THE FOLLOWING LOCATIONS TO PROTECT FISH HEALTH: TANK ROOMS A-G, FISH HEALTH LABS 07, 08, 17, 18 AND ALONG THE BROODSTOCK BUILDING. SEE SPECIFICATIONS FOR ADDITIONAL INFORMATION.

SEE PRICE SCHEDULE IN SPECIFICATIONS. BASE PRICES IS THE ENTIRE WORK ASSOCIATED WITH THE TANK/AQUARIA BUILDING. OPTION ITEM NO. 1 IS THE ENTIRE WORK ASSOCIATED WITH THE MAIN BUILDING.

SUMMER CONSULTANTS INCORPORATED
7900 Westpark Dr. | Suite A405 | McLean, VA 22102
(703) 556-8820 | www.summerconsultants.com

NO.	DATE	BY	DESCRIPTION

REVISIONS

A-E FIRM	USDA
PROJECT MANAGER: AJ	EPM
DESIGNER: JAD	PPM
CHECKED BY: AJ	SAFETY & HEALTH
DRAWN BY: JAD	REAL PROPERTY

USDA

Agricultural Research Service

ROOF REPAIRS NCCCWA

KEARNEYSVILLE, WEST VIRGINIA

NATIONAL CENTER FOR COOL AND THE COLD-WATER AQUACULTURE

SOLICITATION NO.

DATE: 06 APRIL 2026

COVER SHEET

DWG. NO. G-001

SHEET 1 OF 15

FILE NAME: 212.009 COVER.DWG
OUR REF: 212.009
PLOT DATE: 4/23/2026 9:04:59 AM

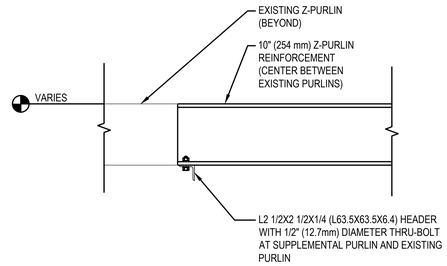

NOTES:

1. REINFORCE EDGE FRAMING ADJACENT TO RIDGE, IN ALL BAYS WHERE REINFORCEMENT IS MISSING. MATCH EXISTING EDGE REINFORCEMENT USED AT THE REMAINDER OF THE ROOF.

1 ROOF EDGE REINFORCEMENT
S-002

1:10 0 100 200 400

STRUCTURAL GENERAL NOTES

CONSTRUCTION SHALL COMPLY WITH THE FOLLOWING CRITERIA UNLESS OTHERWISE NOTED ON THE DRAWINGS.

A. CODES AND STANDARDS

THE FOLLOWING CODES AND STANDARDS GOVERN THE DESIGN, CONSTRUCTION, QUALITY CONTROL, AND SAFETY OF STRUCTURAL WORK PERFORMED ON THIS PROJECT:

1. *INTERNATIONAL BUILDING CODE* (IBC-2021), INTERNATIONAL CODE COUNCIL (ICC).
2. *INTERNATIONAL EXISTING BUILDING CODE* (IEBC-2021), INTERNATIONAL CODE COUNCIL (ICC).
3. *MINIMUM DESIGN LOADS AND ASSOCIATED CRITERIA FOR BUILDING AND OTHER STRUCTURES* (ASCE 7-16), AMERICAN SOCIETY OF CIVIL ENGINEERS.
4. *SPECIFICATION FOR STRUCTURAL STEEL BUILDINGS* (AISC 360-16), AMERICAN INSTITUTE OF STEEL CONSTRUCTION (AISC).

B. DEAD LOADS

1. LAB /OFFICE ROOF REPLACEMENT WILL NOT RESULT IN ANY NET INCREASE IN DEAD LOAD.
2. TANK / AQUARIA ROOF REPLACEMENT WILL ADD MAXIMUM OF 3 PSF (0.14 kPa) DEAD LOAD.
3. PER IEBC 706.2.2, AN INCREASED DEAD LOAD DUE ENTIRELY TO THE ADDITION OF A SECOND LAYER OF ROOF COVERING WEIGHING 3 PSF (0.14 kPa) OR LESS OVER AN EXISTING SINGLE LAYER OF ROOF COVERING IS PERMISSIBLE UNDER THE REQUIREMENTS FOR LEVEL 1 ALTERATION.

C. LIVE LOADS

1. SLOPE ROOF:	20 PSF (0.96 kPa)

D. SNOW LOADS

1. GROUND SNOW LOAD (Pg):	30 PSF (1.44 kPa)
2. SLOPED-ROOF SNOW LOAD (Ps):	23 PSF (1.10 kPa)
3. SNOW EXPOSURE FACTOR (Ce):	1.0
4. SNOW LOAD IMPORTANCE FACTOR (I_S):	1.0
5. THERMAL FACTOR (Ct):	1.1
6. SLOPE FACTOR (C_S):	1.0

E. SEISMIC DESIGN CRITERIA

1. SHORT PERIOD SPECTRAL RESPONSE ACCELERATION, (Ss):	0.124g
2. 1-SECOND SPECTRAL RESPONSE ACCELERATION, (S1):	0.043g
3. SITE CLASS:	D (DEFAULT)
4. RISK CATEGORY:	II
5. DESIGN SHORT PERIOD SPECTRAL RESPONSE ACCELERATION, (S_{DS}):	0.132g
6. DESIGN 1-SECOND SPECTRAL RESPONSE ACCELERATION, (S_{D1}):	0.069g
7. SEISMIC DESIGN CATEGORY:	B

8. PER IEBC 706.2.2, AN INCREASED DEAD LOAD DUE ENTIRELY TO THE ADDITION OF A SECOND LAYER OF ROOF COVERING WEIGHING 3 PSF (0.14 kPa) OR LESS OVER AN EXISTING SINGLE LAYER OF ROOF COVERING IS PERMISSIBLE UNDER THE REQUIREMENTS FOR LEVEL 1 ALTERATION.

F. WIND LOADS

1. BASIC DESIGN WIND SPEED (3-SECOND GUST) (V):	111 MPH (179 KPH) (ULTIMATE)
2. WIND EXPOSURE CATEGORY:	C
3. WIND DIRECTIONALITY FACTOR (Kd):	0.85
4. TOPOGRAPHIC FACTOR (Kzt):	1.0
5. GROUND ELEVATION FACTOR (Ke):	1.0
6. INTERNAL PRESSURE COEFFICIENT:	+0.18/-0.18

7. COMPONENTS AND CLADDING DESIGN PRESSURES (P) SHOWN ON S-002.

G. COLD-FORMED METAL & STRUCTURAL STEEL FRAMING

1. PROVIDE COLD-FORMED METAL FRAMING THAT IS FORMED FROM SHEET STEEL THAT CONFORMS TO ASTM A653, GRADE 55 (GRADE 380).
2. PROVIDE ASTM A36 STRUCTURAL STEEL ANGLES.
3. PROVIDE ASTM A325N BOLTS

H. GENERAL CONTRACTOR

1. SUBMIT IMPOSED CONSTRUCTION LOADS, IN EXCESS OF STATED DESIGN LOADS TO THE CONTRACTING OFFICER FOR APPROVAL, PRIOR TO THE IMPOSITION OF SUCH LOADS.
2. SUBMIT METHODS AND SEQUENCE OF REMOVING EXISTING STRUCTURE, AS WELL AS TYPES OF TOOLS AND EQUIPMENT TO BE USED, PRIOR TO BEGINNING WORK. TAKE EXTREME CARE TO PROTECT THE INTEGRITY OF THE EXISTING ADJACENT CONSTRUCTION AT ALL TIMES. THE CONTRACTOR SHALL BEAR THE COST OF REPAIRS OR REPLACEMENT FOR DAMAGE TO ANY PART OF THE EXISTING CONSTRUCTION, OR ADJOINING PROPERTY.

Elliott, LeBoeuf & McElwain
8001 Forbes Place, Suite 201
Springfield, VA 22151
Phone: (703) 321-2100 Fax: (703) 321-2112

SUMMER CONSULTANTS INCORPORATED
7900 Westpark Dr. | Suite A405 | McLean, VA 22102
(703) 556-8820 | www.summerconsultants.com

NO.	DATE	BY	DESCRIPTION

REVISIONS

USDA

Agricultural Research Service

ROOF REPAIRS NCCCWA

KEARNEYSVILLE, WEST VIRGINIA

NATIONAL CENTER FOR COOL AND THE COLD-WATER AQUACULTURE

A-E FIRM	USDA
PROJECT MANAGER: JMM	EPM
DESIGNER: JMM	PPM
CHECKED BY: JMM	SAFETY & HEALTH
DRAWN BY: CJ	REAL PROPERTY

SOLICITATION NO.

DATE: 04-07-2026

STRUCTURAL NOTES & DETAILS

DWG. NO. S-001

SHEET 2 OF 15

JONATHAN M. McELWAIN REGISTERED 01-1207 STATE OF WEST VIRGINIA PROFESSIONAL ENGINEER

FILE NAME: S-001.DWG
OUR REF: 212.009
PLOT DATE: 4/6/2026 9:31:09 AM

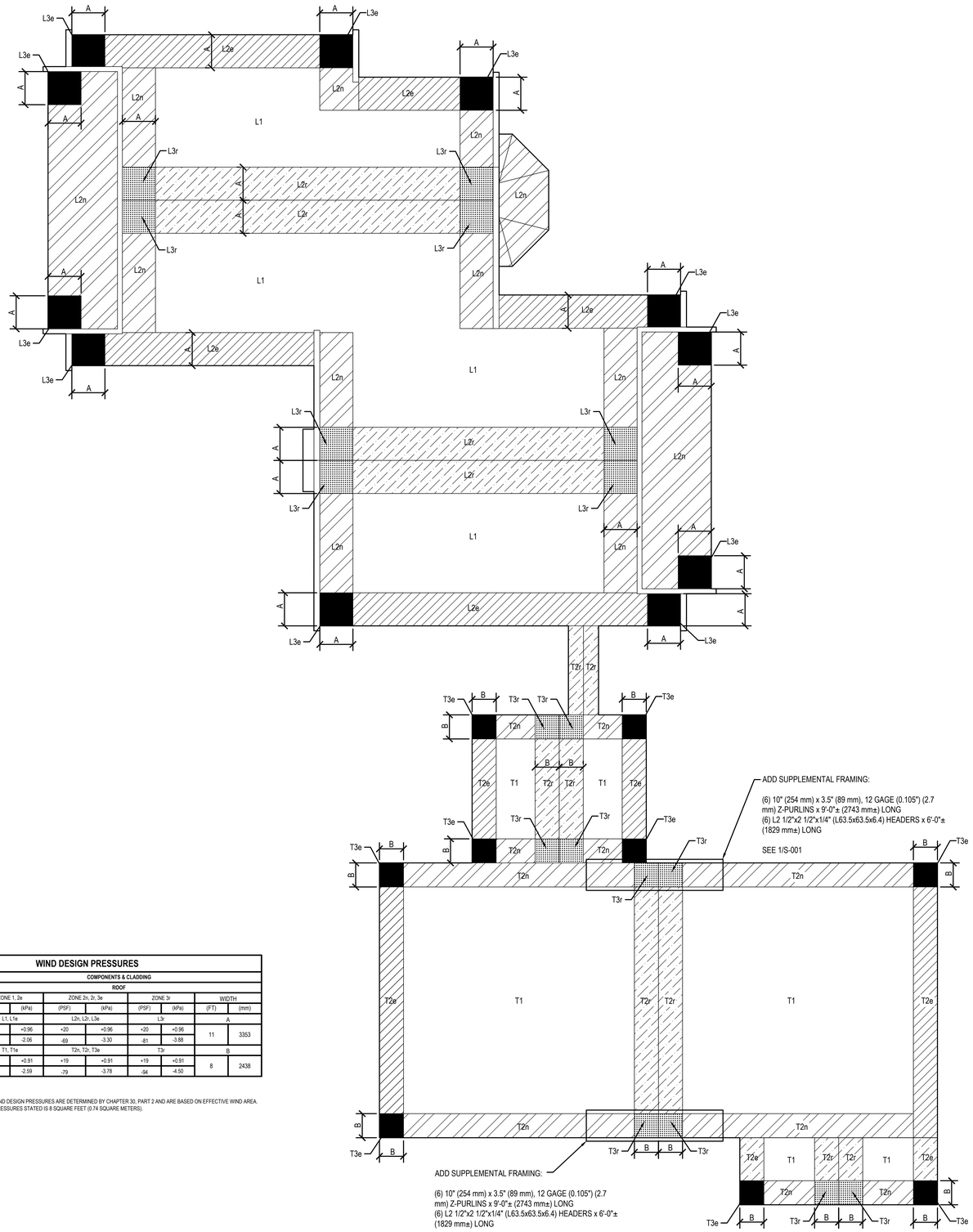

WIND DESIGN PRESSURES

BUILDING	COMPONENTS & CLADDING							
	ROOF							
	ZONE 1, 2e		ZONE 2n, 2r, 3e		ZONE 3r		WIDTH	
	(PSF)	(kPa)	(PSF)	(kPa)	(PSF)	(kPa)	(FT)	(mm)
LAB / OFFICE	L1, L1e		L2n, L2r, L3e		L3r		A	
	+20	+0.96	+20	+0.96	+20	+0.96	11	3353
	-43	-2.06	-69	-3.30	-81	-3.88		
TANK / AQUARIA	T1, T1e		T2n, T2r, T3e		T3r		B	
	+19	+0.91	+19	+0.91	+19	+0.91	8	2438
	-54	-2.59	-79	-3.78	-84	-4.50		

NOTES:

1. COMPONENTS & CLADDING WIND DESIGN PRESSURES ARE DETERMINED BY CHAPTER 30, PART 2 AND ARE BASED ON EFFECTIVE WIND AREA. EFFECTIVE WIND AREA FOR PRESSURES STATED IS 8 SQUARE FEET (0.74 SQUARE METERS).

1 COMPONENTS & CLADDING WIND LOAD DIAGRAM
S-002

1:200 0 2000 4000 8000

N

Elliott, LeBoeuf & McElwain
8001 Forbes Place, Suite 201
Springfield, VA 22151
Phone: (703) 321-2100 Fax: (703) 321-2112

SUMMER CONSULTANTS INCORPORATED
7900 Westpark Dr. | Suite A405 | McLean, VA 22102
(703) 556-8820 | www.summerconsultants.com

NO.	DATE	BY	DESCRIPTION

REVISIONS

A–E FIRM | USDA

PROJECT MANAGER: JMM | EPM

DESIGNER: JMM | PPM

CHECKED BY: JMM | SAFETY & HEALTH

DRAWN BY: CJ | REAL PROPERTY

USDA Agricultural Research Service

ROOF REPAIRS NCCCWA

KEARNEYSVILLE, WEST VIRGINIA

NATIONAL CENTER FOR COOL AND THE COLD-WATER AQUACULTURE

SOLICITATION NO.

DATE: 04-07-2026

WIND LOAD DIAGRAM

DWG. NO. S-002

SHEET 3 of 15

JONATHAN M. MCELWAIN REGISTERED 017207 STATE OF WEST VIRGINIA PROFESSIONAL ENGINEER

FILE NAME: S-002.DWG
OUR REF: 212.009
PLOT DATE: 4/6/2026 9:31:11 AM

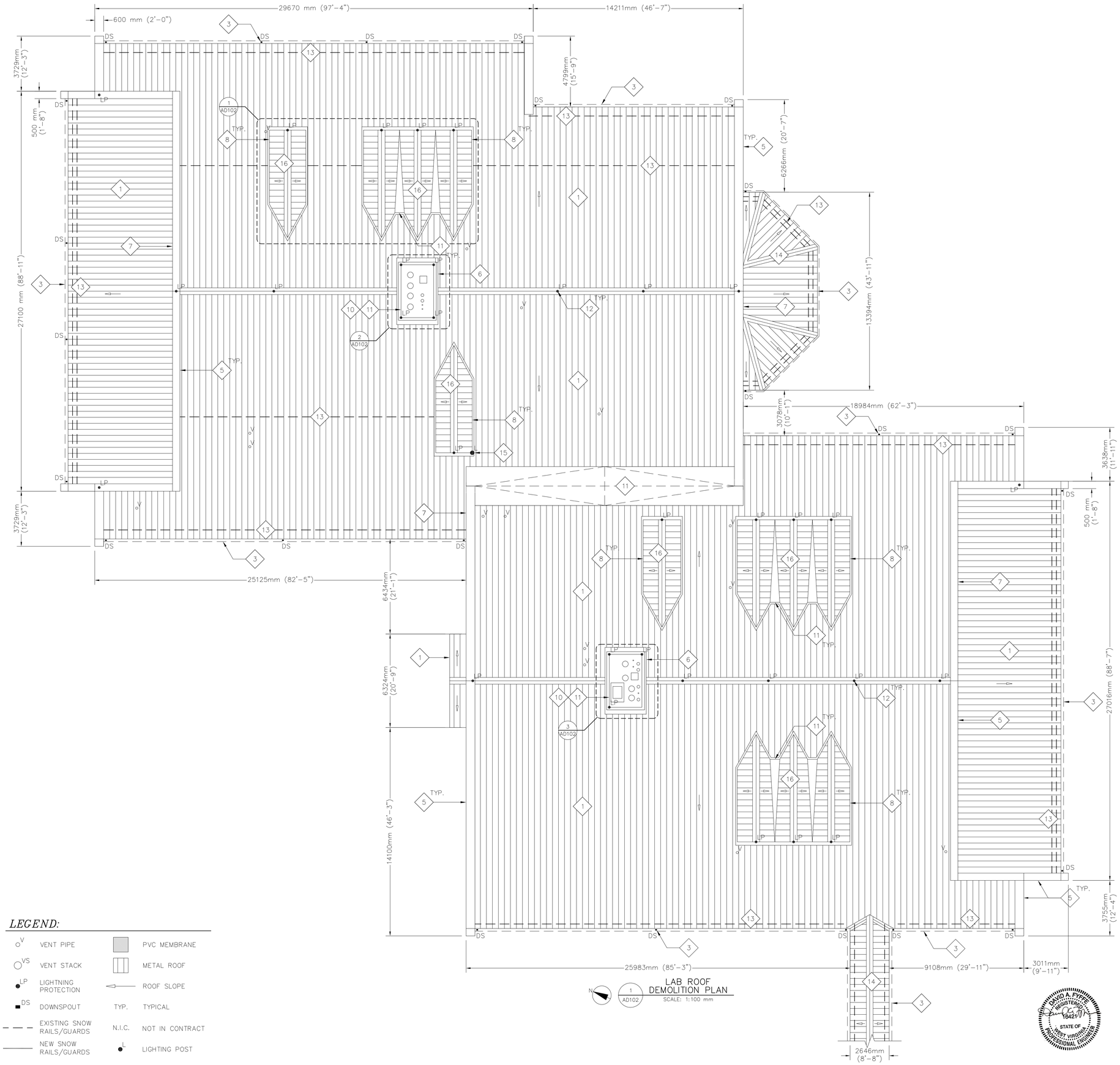

LAB ROOF DEMOLITION PLAN
SCALE: 1:100 mm

GENERAL NOTES:

1. CONTRACTOR TO COORDINATE WITH GOVERNMENT WITH REGARD TO ACCESS AND STAGING.
2. THE CONTRACTOR IS RESPONSIBLE FOR OBTAINING ALL PERMITS REQUIRED FOR EXECUTION OF THE WORK OF THIS CONTRACT.
3. CONDUCT ALL OPERATIONS IN STRICT ACCORDANCE WITH OSHA AND OTHER ENTITIES HAVING JURISDICTION.
4. THE CONTRACTOR SHALL REMOVE ALL CONSTRUCTION DEBRIS FROM OWNERS PROPERTY AND DISPOSE ACCORDING TO LOCAL REGULATIONS WEEKLY.
5. REMOVE ONLY AS MUCH EXISTING ROOFING AS CAN BE REPLACED AND REMAIN WATERTIGHT DURING EACH SHIFT. PROVIDE WATERTIGHT TIE-INS BETWEEN NEW AND EXISTING WORK.
6. CONTRACTOR IS REQUIRED TO RESTORE ALL AREAS USED FOR ACCESS AND STAGING TO PRECONSTRUCTION CONDITION AT COMPLETION OF WORK.
7. BIOSECURITY MUST BE FOLLOWED WHEN OPERATING IN THE FOLLOWING LOCATIONS TO PROTECT FISH HEALTH: TANK ROOMS A-G, FISH HEALTH LABS 07, 08, 17, 18, AND ALONG THE BROODSTOCK BUILDING. FURTHER INFORMATION CAN BE FOUND ON THE BIOSECURITY STATEMENT ATTACHED TO THE BIOSECURITY STATEMENT IN THE SPECIFICATIONS.

DEMOLITION KEYED NOTES:

1. REMOVE EXISTING ARCHITECTURAL METAL ROOF AND POLYISOCYANURATE INSULATION DOWN TO STEEL DECK. CLEAN AND REPAIR THE STEEL DECK AS NECESSARY. SALVAGE ANY USABLE INSULATION FOR REUSE. ASSUME 50% OF INSULATION IS SUITABLE FOR REUSE
2. PREPARE EXISTING STANDING SEAM METAL ROOF FOR REROOFING.
3. REMOVE EXISTING GUTTERS AND DOWNSPOUTS.
4. NOT USED
5. REMOVE EXISTING METAL COPING.
6. REMOVE EXISTING MASONRY AT BASE OF CHIMNEYS AS REQUIRED TO INSTALL NEW METAL ROOFING.
7. REMOVE EXISTING STUCCO SIDING AS NECESSARY TO INSTALL NEW METAL ROOFING.
8. REMOVE AND RESET EXISTING WALL PANELS AS NECESSARY TO INSTALL NEW METAL ROOFING. CUT PANELS AS NECESSARY TO INSTALL NEW ROOFING SYSTEM
9. REMOVE EXISTING DORMERS. INFILL WITH ROOF PANELS TO MATCH THE EXISTING ROOF.
10. EXISTING CHIMNEYS. REMOVE EXISTING EPDM MEMBRANE AND BASE FLASHING AROUND PENETRATIONS. REPAIR PENETRATIONS AS NECESSARY.
11. REMOVE EPDM ROOF. DOWN TO THE STEEL DECK. CLEAN AND REPAIR STEEL DECK.
12. MAINTAIN LIGHTNING PROTECTION IN SERVICE DURING ROOF REPLACEMENT. RESTORE AND RECERTIFY AT COMPLETION.
13. REMOVE SNOW RAILS.
14. REMOVE EXISTING STEEL ROOFING AND FIBROUS INSULATION DOWN TO STEEL PURLINS.
15. REMOVE AND RESET EXISTING LIGHTING POST AND CABLE
16. REMOVE EXISTING ARCHITECTURAL METAL ROOF DOWN TO STEEL STUDS

LEGEND:

V	VENT PIPE		PVC MEMBRANE
VS	VENT STACK		METAL ROOF
LP	LIGHTNING PROTECTION		ROOF SLOPE
DS	DOWNSPOUT	TYP.	TYPICAL
	EXISTING SNOW RAILS/GUARDS	N.I.C.	NOT IN CONTRACT
	NEW SNOW RAILS/GUARDS	L	LIGHTING POST

SEAL ENGINEERING INC.
3923 DUKE STREET ALEXANDRIA, VIRGINIA 22314
703-823-6566 | www.seal-eng.com

SUMMER CONSULTANTS INCORPORATED
7900 Westpark Dr. | Suite A405 | McLean, VA 22102
(703) 556-8820 | www.summerconsultants.com

NO.	DATE	BY	DESCRIPTION

REVISIONS

A-E FIRM: USDA

PROJECT MANAGER: DAF
EPM:
DESIGNER: JJH
PPM:
CHECKED BY: DAF
SAFETY & HEALTH:
DRAWN BY: JJH
REAL PROPERTY:

USDA Agricultural Research Service

ROOF REPAIRS NCCCWA
KEARNEYSVILLE, WEST VIRGINIA
NATIONAL CENTER FOR COOL AND THE COLD-WATER AQUACULTURE

SOLICITATION NO.
DATE: 04-07-2026

DEMOLITION ROOF PLAN - LAB BUILDING

DWG. NO. AD101
SHEET 4 OF 15

DAVID A. PYFER REGISTERED 18421 STATE OF WEST VIRGINIA PROFESSIONAL ENGINEER

FILE NAME:
OUR REF: 212.009
PLOT DATE:

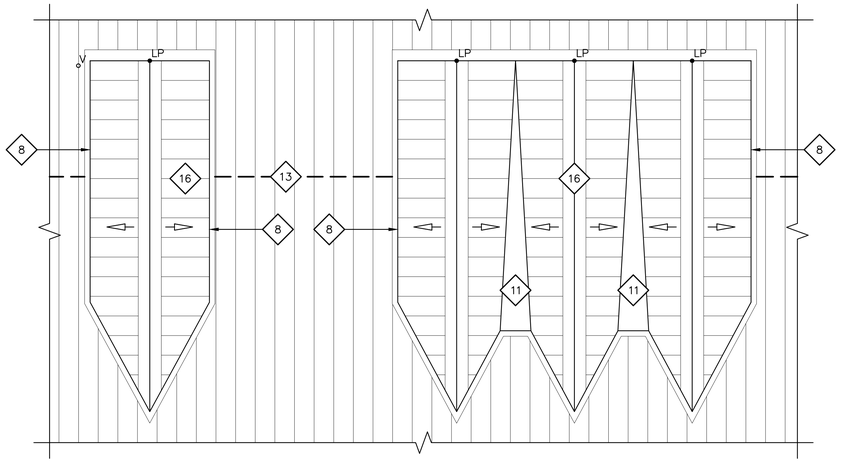

N 1 AD102 **LAB BUILDING LOUVERS DEMOLITION PLAN**
SCALE: 1:50 mm

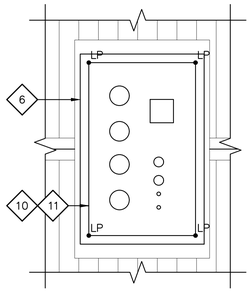

N 2 AD102 **LAB BUILDING EAST CHIMNEY DEMOLITION PLAN**
SCALE: 1:50 mm

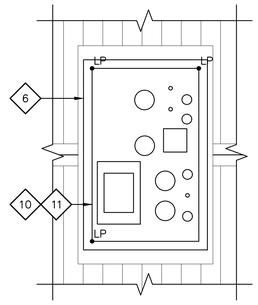

N 3 AD102 **LAB BUILDING WEST CHIMNEY DEMOLITION PLAN**
SCALE: 1:50 mm

GENERAL NOTES:

1. CONTRACTOR TO COORDINATE WITH GOVERNMENT WITH REGARD TO ACCESS AND STAGING.
2. THE CONTRACTOR IS RESPONSIBLE FOR OBTAINING ALL PERMITS REQUIRED FOR EXECUTION OF THE WORK OF THIS CONTRACT.
3. CONDUCT ALL OPERATIONS IN STRICT ACCORDANCE WITH OSHA AND OTHER ENTITIES HAVING JURISDICTION.
4. THE CONTRACTOR SHALL REMOVE ALL CONSTRUCTION DEBRIS FROM OWNERS PROPERTY AND DISPOSE ACCORDING TO LOCAL REGULATIONS WEEKLY.
5. REMOVE ONLY AS MUCH EXISTING ROOFING AS CAN BE REPLACED AND REMAIN WATERTIGHT DURING EACH SHIFT. PROVIDE WATERTIGHT TIE-INS BETWEEN NEW AND EXISTING WORK.
6. CONTRACTOR IS REQUIRED TO RESTORE ALL AREAS USED FOR ACCESS AND STAGING TO PRECONSTRUCTION CONDITION AT COMPLETION OF WORK.
7. BIOSECURITY MUST BE FOLLOWED WHEN OPERATING IN THE FOLLOWING LOCATIONS TO PROTECT FISH HEALTH: TANK ROOMS A-G, FISH HEALTH LABS 07, 08, 17, 18, AND ALONG THE BROODSTOCK BUILDING. FURTHER INFORMATION CAN BE FOUND ON THE BIOSECURITY STATEMENT ATTACHED TO THE BIOSECURITY STATEMENT IN THE SPECIFICATIONS.

DEMOLITION KEYED NOTES:

1. REMOVE EXISTING ARCHITECTURAL METAL ROOF AND POLYISOCYANURATE INSULATION DOWN TO STEEL DECK. CLEAN AND REPAIR THE STEEL DECK AS NECESSARY. SALVAGE ANY USABLE INSULATION FOR REUSE. ASSUME 50% OF INSULATION IS SUITABLE FOR REUSE
2. PREPARE EXISTING STANDING SEAM METAL ROOF FOR REROOFING.
3. REMOVE EXISTING GUTTERS AND DOWNSPOUTS.
4. NOT USED
5. REMOVE EXISTING METAL COPING.
6. REMOVE EXISTING MASONRY AT BASE OF CHIMNEYS AS REQUIRED TO INSTALL NEW METAL ROOFING.
7. REMOVE EXISTING STUCCO SIDING AS NECESSARY TO INSTALL NEW METAL ROOFING.
8. REMOVE AND RESET EXISTING WALL PANELS AS NECESSARY TO INSTALL NEW METAL ROOFING. CUT PANELS AS NECESSARY TO INSTALL NEW ROOFING SYSTEM
9. REMOVE EXISTING DORMERS. INFILL WITH ROOF PANELS TO MATCH THE EXISTING ROOF.
10. EXISTING CHIMNEYS. REMOVE EXISTING EPDM MEMBRANE AND BASE FLASHING AROUND PENETRATIONS. REPAIR PENETRATIONS AS NECESSARY.
11. REMOVE EPDM ROOF. DOWN TO THE STEEL DECK. CLEAN AND REPAIR STEEL DECK.
12. MAINTAIN LIGHTNING PROTECTION IN SERVICE DURING ROOF REPLACEMENT. RESTORE AND RECERTIFY AT COMPLETION.
13. REMOVE SNOW RAILS.
14. REMOVE EXISTING STEEL ROOFING AND FIBROUS INSULATION DOWN TO STEEL PURLINS.
15. REMOVE AND RESET EXISTING LIGHTING POST AND CABLE
16. REMOVE EXISTING ARCHITECTURAL METAL ROOF DOWN TO STEEL STUDS

LEGEND:

V	VENT PIPE		PVC MEMBRANE
VS	VENT STACK		METAL ROOF
LP	LIGHTNING PROTECTION		ROOF SLOPE
DS	DOWNSPOUT	TYP.	TYPICAL
	EXISTING SNOW RAILS/GUARDS	N.I.C.	NOT IN CONTRACT
	NEW SNOW RAILS/GUARDS	L	LIGHTNING POST

SEAL ENGINEERING INC.
3323 DUKE STREET ALEXANDRIA, VIRGINIA 22314
703-823-6366 | www.seal-eng.com

SUMMER CONSULTANTS INCORPORATED
7900 Westpark Dr. | Suite A405 | McLean, VA 22102
(703) 556-8820 | www.summerconsultants.com

NO.	DATE	BY	DESCRIPTION

REVISIONS

A-E FIRM: USDA

PROJECT MANAGER: DAF
EPM:
DESIGNER: JJH
PPM:
CHECKED BY: DAF
SAFETY & HEALTH:
DRAWN BY: JJH
REAL PROPERTY:

USDA Agricultural Research Service

ROOF REPAIRS NCCCWA
KEARNEYSVILLE, WEST VIRGINIA
NATIONAL CENTER FOR COOL AND THE COLD-WATER AQUACULTURE

SOLICITATION NO.:
DATE: 04-07-2026

DEMOLITION ROOF PLAN - LAB BUILDING

DWG. NO.: AD102
SHEET 5 OF 15

DAVID A. FYZE REGISTERED 18421 STATE OF WEST VIRGINIA PROFESSIONAL ENGINEER

FILE NAME:
OUR REF: 212.009
PLOT DATE:

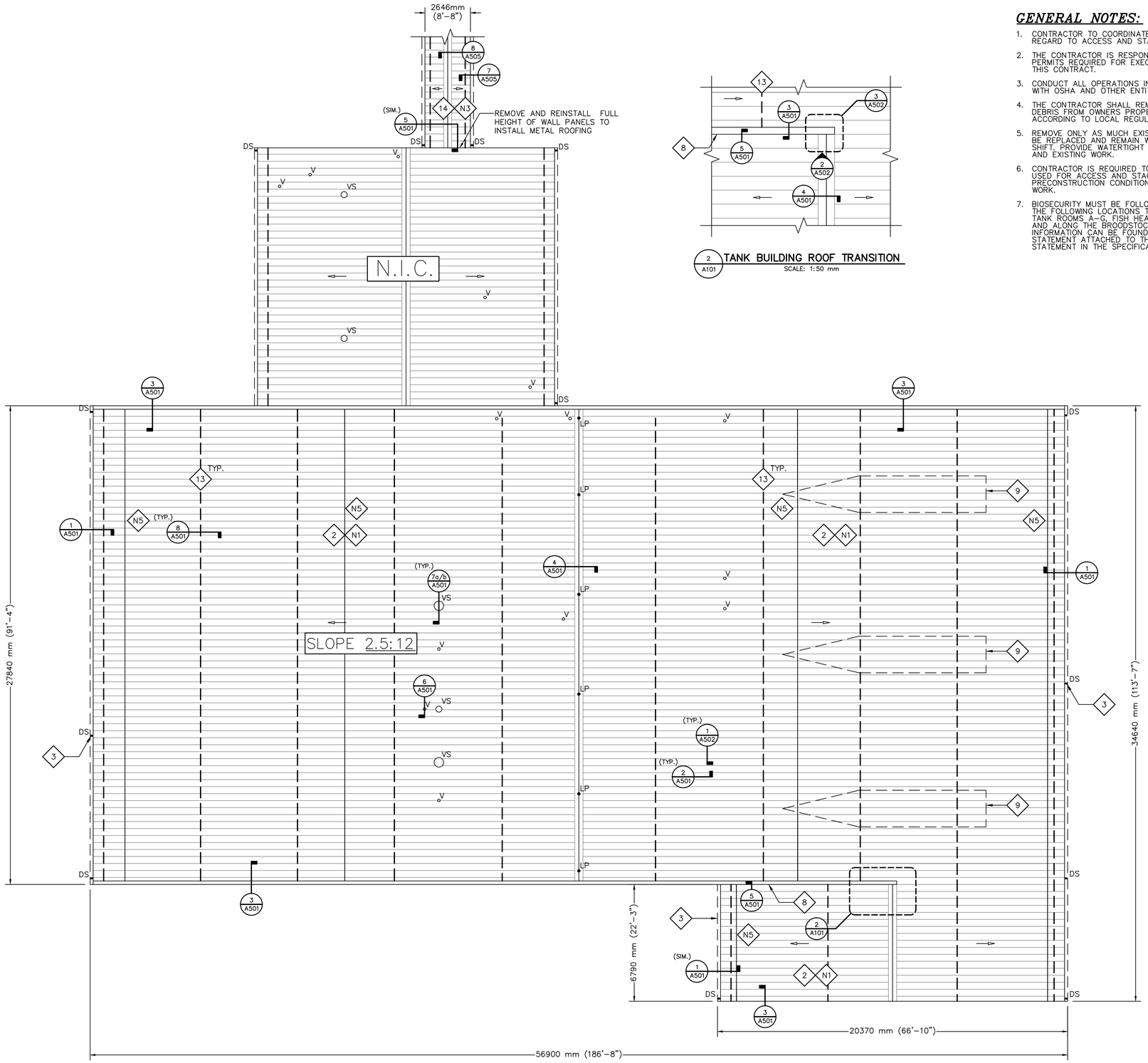

1 A101 TANK BUILDING ROOF – DEMOLITION AND NEW WORK PLAN
SCALE: 1:100 mm

2 A101 TANK BUILDING ROOF TRANSITION
SCALE: 1:50 mm

GENERAL NOTES:

1. CONTRACTOR TO COORDINATE WITH GOVERNMENT WITH REGARD TO ACCESS AND STAGING.
2. THE CONTRACTOR IS RESPONSIBLE FOR OBTAINING ALL PERMITS REQUIRED FOR EXECUTION OF THE WORK OF THIS CONTRACT.
3. CONDUCT ALL OPERATIONS IN STRICT ACCORDANCE WITH OSHA AND OTHER ENTITIES HAVING JURISDICTION.
4. THE CONTRACTOR SHALL REMOVE ALL CONSTRUCTION DEBRIS FROM OWNERS PROPERTY AND DISPOSE ACCORDING TO LOCAL REGULATIONS WEEKLY.
5. REMOVE ONLY AS MUCH EXISTING ROOFING AS CAN BE REPLACED AND REMAIN WATERTIGHT DURING EACH SHIFT. PROVIDE WATERTIGHT TIE-INS BETWEEN NEW AND EXISTING WORK.
6. CONTRACTOR IS REQUIRED TO RESTORE ALL AREAS USED FOR ACCESS AND STAGING TO PRECONSTRUCTION CONDITION AT COMPLETION OF WORK.
7. BIOSECURITY MUST BE FOLLOWED WHEN OPERATING IN THE FOLLOWING LOCATIONS TO PROTECT FISH HEALTH: TANK ROOMS A-G, FISH HEALTH LABS 07, 08, 17, 18, AND ALONG THE BROODSTOCK BUILDING. FURTHER INFORMATION CAN BE FOUND ON THE BIOSECURITY STATEMENT ATTACHED TO THE BIOSECURITY STATEMENT IN THE SPECIFICATIONS.

DEMOLITION KEYED NOTES:

1. REMOVE EXISTING ARCHITECTURAL METAL ROOF AND POLYISOCYANURATE INSULATION DOWN TO STEEL DECK. CLEAN AND REPAIR THE STEEL DECK AS NECESSARY. SALVAGE ANY USABLE INSULATION FOR REUSE. ASSUME 50% OF INSULATION IS SUITABLE FOR REUSE
2. PREPARE EXISTING STANDING SEAM METAL ROOF FOR REROOFING.
3. REMOVE EXISTING GUTTERS AND DOWNSPOUTS.
4. NOT USED
5. REMOVE EXISTING METAL COPING.
6. REMOVE EXISTING MASONRY AT BASE OF CHIMNEYS AS REQUIRED TO INSTALL NEW METAL ROOFING.
7. REMOVE EXISTING STUCCO SIDING AS NECESSARY TO INSTALL NEW METAL ROOFING.
8. REMOVE AND RESET EXISTING WALL PANELS AS NECESSARY TO INSTALL NEW METAL ROOFING. CUT PANELS AS NECESSARY TO INSTALL NEW ROOFING SYSTEM
9. REMOVE EXISTING DORMERS. INFILL WITH ROOF PANELS TO MATCH THE EXISTING ROOF.
10. EXISTING CHIMNEYS. REMOVE EXISTING EPDM MEMBRANE AND BASE FLASHING AROUND PENETRATIONS. REPAIR PENETRATIONS AS NECESSARY.
11. REMOVE EPDM ROOF, DOWN TO THE STEEL DECK. CLEAN AND REPAIR STEEL DECK.
12. MAINTAIN LIGHTNING PROTECTION IN SERVICE DURING ROOF REPLACEMENT. RESTORE AND RECERTIFY AT COMPLETION.
13. REMOVE SNOW RAILS.
14. REMOVE EXISTING STEEL ROOFING AND FIBROUS INSULATION DOWN TO STEEL PURLINS.
15. REMOVE AND RESET EXISTING LIGHTING POST AND CABLE
16. REMOVE EXISTING ARCHITECTURAL METAL ROOF DOWN TO STEEL STUDS

NEW WORK KEYED NOTES:

- N1 INSTALL LOOSE LAID VAPOR BARRIER OVER EXISTING ROOF. INSTALL STRUCTURAL ROOF SUBFRAMING SYSTEM TO EXISTING PURLINS. INSTALL POLYISOCYANURATE INSULATION LAYER. INSTALL ICE AND WATER SHIELD AT EAVES, RAKES AND RIDGES. INSTALL SYNTHETIC UNDERLAYMENT OVER ENTIRE ROOF. INSTALL 24 GAUGE (0.701 mm) PREFINISHED GALVANIZED STEEL ROOF PANELS WITH 2 3/4" (70 mm) STANDING SEAMS 18" (457 mm) ON CENTER. INSTALL ALL ACCESSORIES AND FLASHINGS AS INDICATED ON THE DETAILS AND AS REQUIRED TO PROVIDE A WATERTIGHT AND CODE COMPLIANT INSTALLATION.
- N2 INSTALL SELF ADHERED VAPOR BARRIER (TEMP. ROOF) OVER METAL ROOF DECK. INSTALL TWO LAYERS OF POLYISOCYANURATE INSULATION (R30 TOTAL). INSTALL ICE AND WATER SHIELD AT EAVES, RAKES AND RIDGES. INSTALL SYNTHETIC UNDERLAYMENT OVER ENTIRE ROOF. INSTALL 24 GAUGE (0.701 mm) PREFINISHED GALVANIZED STEEL ROOF PANELS WITH 1 3/8" (35 mm) STANDING SEAMS 16" (406 mm) ON CENTER. INSTALL ALL ACCESSORIES AND FLASHINGS AS INDICATED ON THE DETAILS AND AS REQUIRED TO PROVIDE A WATERTIGHT AND CODE COMPLIANT INSTALLATION.
- N3 INSTALL R38 FACED INSULATION OVER EXISTING PURLINS. INSATLL 1/2" (12 mm) PLYWOOD OVER EXISTING PURLINS. INSTALL 24 GAUGE (0.701 mm) PREFINISHED GALVANIZED STEEL ROOF PANELS WITH 1 3/8" (35 mm) STANDING SEAMS 16" (406 mm) ON CENTER. INSTALL ALL ACCESSORIES AND FLASHINGS AS INDICATED ON THE DETAILS AND AS REQUIRED TO PROVIDE A WATERTIGHT AND CODE COMPLIANT INSTALLATION.
- N4 INSTALL INSULATION, COVER BOARD AND PVC ROOFING MEMBRANE AT VALLEY AND "CHIMNEY" CAPS.
- N5 SNOW GUARD W/ CLAMPS AT EACH SEAM
- N6 SNOW GUARD W/ CLAMPS AT EVERY OTHER SEAM
- N7 SNOW GUARD W/ CLAMPS AT EVERY THIRD SEAM
- N8 INSATLL 1/2" (12 mm) PLYWOOD OVER EXISTING STUDS. INSTALL 24 GAUGE (0.701 mm) PREFINISHED GALVANIZED STEEL ROOF PANELS WITH 1 3/8" (35 mm) STANDING SEAMS 16" (406 mm) ON CENTER. INSTALL ALL ACCESSORIES AND FLASHINGS AS INDICATED ON THE DETAILS AND AS REQUIRED TO PROVIDE A WATERTIGHT AND CODE COMPLIANT INSTALLATION.

LEGEND:

V	VENT PIPE		PVC MEMBRANE
VS	VENT STACK		METAL ROOF
LP	LIGHTNING PROTECTION		ROOF SLOPE
DS	DOWNSPOUT	TYP.	TYPICAL
	EXISTING SNOW RAILS/GUARDS	N.I.C.	NOT IN CONTRACT
	NEW SNOW RAILS/GUARDS	L	LIGHTING POST

SEAL ENGINEERING INC.
3323 DUKE STREET ALEXANDRIA, VIRGINIA 22314
703-823-6366 | www.seal-eng.com

SUMMER CONSULTANTS INCORPORATED
7900 Westpark Dr. | Suite A405 | McLean, VA 22102
(703) 556-8820 | www.summerconsultants.com

NO.	DATE	BY	DESCRIPTION

REVISIONS

A-E FIRM | USDA

PROJECT MANAGER: DAF
EPM
DESIGNER: JJH
PPM
CHECKED BY: DAF
SAFETY & HEALTH
DRAWN BY: JJH
REAL PROPERTY

USDA Agricultural Research Service

ROOF REPAIRS NCCCWA
KEARNEYSVILLE, WEST VIRGINIA
NATIONAL CENTER FOR COOL AND THE COLD-WATER AQUACULTURE

SOLICITATION NO.
DATE: 04-07-2026
ROOF PLAN - TANK BUILDING
DWG. NO. A101
SHEET 6 OF 15

DAVID A. FYFE, JR. REGISTERED 19421 STATE OF WEST VIRGINIA PROFESSIONAL ENGINEER

FILE NAME:
OUR REF: 212.009
PLOT DATE:

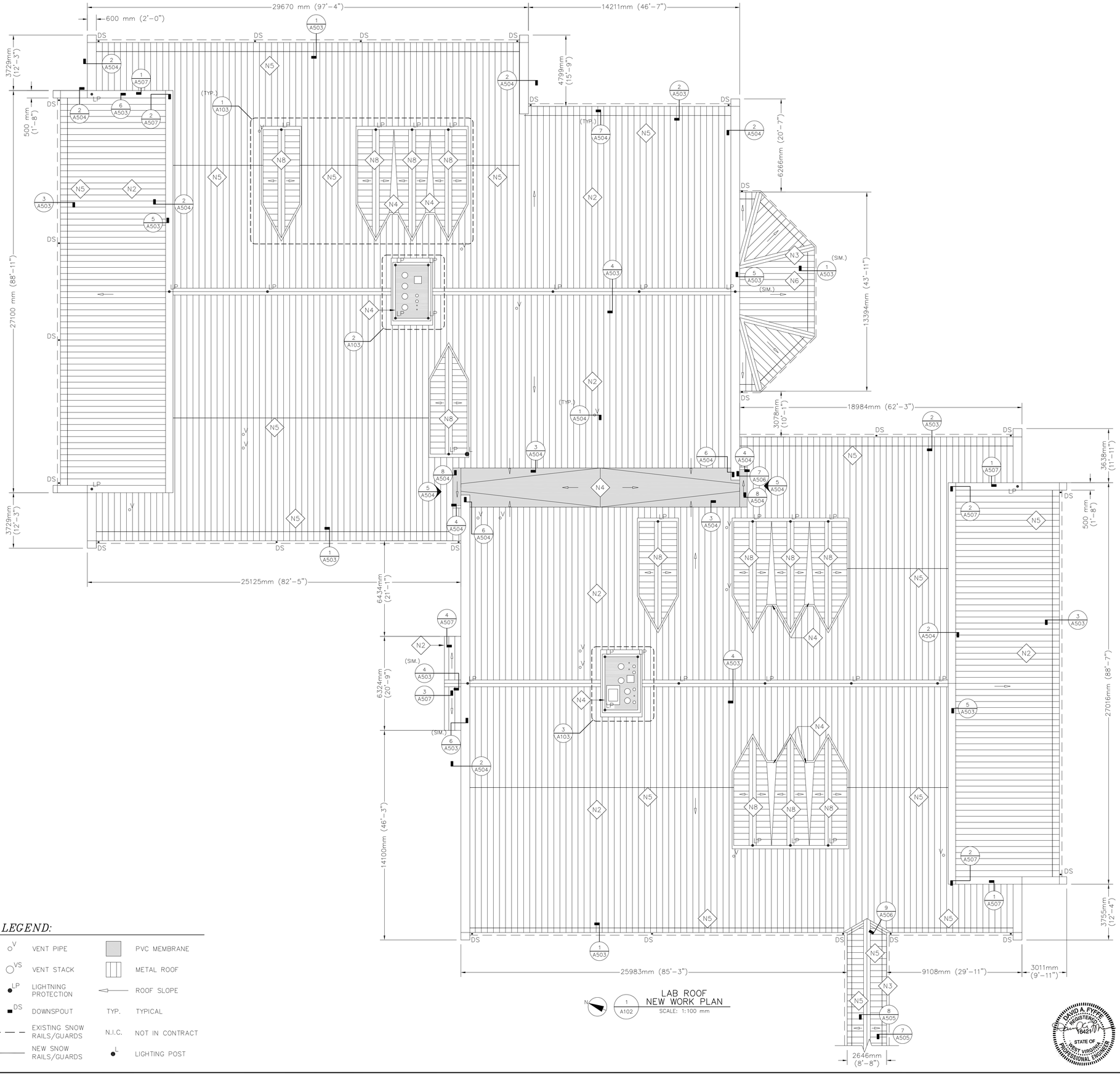

LAB ROOF
NEW WORK PLAN
SCALE: 1:100 mm

GENERAL NOTES:

1. CONTRACTOR TO COORDINATE WITH GOVERNMENT WITH REGARD TO ACCESS AND STAGING.
2. THE CONTRACTOR IS RESPONSIBLE FOR OBTAINING ALL PERMITS REQUIRED FOR EXECUTION OF THE WORK OF THIS CONTRACT.
3. CONDUCT ALL OPERATIONS IN STRICT ACCORDANCE WITH OSHA AND OTHER ENTITIES HAVING JURISDICTION.
4. THE CONTRACTOR SHALL REMOVE ALL CONSTRUCTION DEBRIS FROM OWNERS PROPERTY AND DISPOSE ACCORDING TO LOCAL REGULATIONS WEEKLY.
5. REMOVE ONLY AS MUCH EXISTING ROOFING AS CAN BE REPLACED AND REMAIN WATERTIGHT DURING EACH SHIFT. PROVIDE WATERTIGHT TIE-INS BETWEEN NEW AND EXISTING WORK.
6. CONTRACTOR IS REQUIRED TO RESTORE ALL AREAS USED FOR ACCESS AND STAGING TO PRECONSTRUCTION CONDITION AT COMPLETION OF WORK.
7. BIOSECURITY MUST BE FOLLOWED WHEN OPERATING IN THE FOLLOWING LOCATIONS TO PROTECT FISH HEALTH: TANK ROOMS A-G, FISH HEALTH LABS 07, 08, 17, 18, AND ALONG THE BROODSTOCK BUILDING. FURTHER INFORMATION CAN BE FOUND ON THE BIOSECURITY STATEMENT ATTACHED TO THE BIOSECURITY STATEMENT IN THE SPECIFICATIONS.

NEW WORK KEYED NOTES:

- N1 INSTALL LOOSE LAID VAPOR BARRIER OVER EXISTING ROOF. INSTALL STRUCTURAL ROOF SUBFRAMING SYSTEM TO EXISTING PURLINS. INSTALL POLYISOCYANURATE INSULATION LAYER. INSTALL ICE AND WATER SHIELD AT EAVES, RAKES AND RIDGES. INSTALL SYNTHETIC UNDERLAYMENT OVER ENTIRE ROOF. INSTALL 24 GAUGE (0.701 mm) PREFINISHED GALVANIZED STEEL ROOF PANELS WITH 2 3/4" (70 mm) STANDING SEAMS 18" (457 mm) ON CENTER. INSTALL ALL ACCESSORIES AND FLASHINGS AS INDICATED ON THE DETAILS AND AS REQUIRED TO PROVIDE A WATERTIGHT AND CODE COMPLIANT INSTALLATION.
- N2 INSTALL SELF ADHERED VAPOR BARRIER (TEMP. ROOF) OVER METAL ROOF DECK. INSTALL TWO LAYERS OF POLYISOCYANURATE INSULATION (R30 TOTAL). INSTALL ICE AND WATER SHIELD AT EAVES, RAKES AND RIDGES. INSTALL SYNTHETIC UNDERLAYMENT OVER ENTIRE ROOF. INSTALL 24 GAUGE (0.701 mm) PREFINISHED GALVANIZED STEEL ROOF PANELS WITH 1 3/8" (35 mm) STANDING SEAMS 16" (406 mm) ON CENTER. INSTALL ALL ACCESSORIES AND FLASHINGS AS INDICATED ON THE DETAILS AND AS REQUIRED TO PROVIDE A WATERTIGHT AND CODE COMPLIANT INSTALLATION.
- N3 INSTALL R38 FACED INSULATION OVER EXISTING PURLINS. INSATLL 1/2" (12 mm) PLYWOOD OVER EXISTING PURLINS. INSTALL 24 GAUGE (0.701 mm) PREFINISHED GALVANIZED STEEL ROOF PANELS WITH 1 3/8" (35 mm) STANDING SEAMS 16" (406 mm) ON CENTER. INSTALL ALL ACCESSORIES AND FLASHINGS AS INDICATED ON THE DETAILS AND AS REQIURED TO PROVIDE A WATERTIGHT AND CODE COMPLIANT INSTALLATION.
- N4 INSTALL INSULATION, COVER BOARD AND PVC ROOFING MEMBRANE AT VALLEY AND "CHIMNEY" CAPS.
- N5 SNOW GUARD W/ CLAMPS AT EACH SEAM
- N6 SNOW GUARD W/ CLAMPS AT EVERY OTHER SEAM
- N7 SNOW GUARD W/ CLAMPS AT EVERY THIRD SEAM
- N8 INSATLL 1/2" (12 mm) PLYWOOD OVER EXISTING STUDS. INSTALL 24 GAUGE (0.701 mm) PREFINISHED GALVANIZED STEEL ROOF PANELS WITH 1 3/8" (35 mm) STANDING SEAMS 16" (406 mm) ON CENTER. INSTALL ALL ACCESSORIES AND FLASHINGS AS INDICATED ON THE DETAILS AND AS REQIURED TO PROVIDE A WATERTIGHT AND CODE COMPLIANT INSTALLATION.

LEGEND:

V	VENT PIPE		PVC MEMBRANE
VS	VENT STACK		METAL ROOF
LP	LIGHTNING PROTECTION		ROOF SLOPE
DS	DOWNSPOUT	TYP.	TYPICAL
	EXISTING SNOW RAILS/GUARDS	N.I.C.	NOT IN CONTRACT
	NEW SNOW RAILS/GUARDS		LIGHTING POST

SEAL ENGINEERING INC.
3313 DUKE STREET ALEXANDRIA, VIRGINIA 22314
703-823-6366 | www.seal-eng.com

SUMMER CONSULTANTS INCORPORATED
7900 Westpark Dr. | Suite A405 | McLean, VA 22102
(703) 556-8820 | www.summerconsultants.com

NO.	DATE	BY	DESCRIPTION

REVISIONS

USDA Agricultural Research Service

ROOF REPAIRS NCCCWA
KEARNEYSVILLE, WEST VIRGINIA
NATIONAL CENTER FOR COOL AND THE COLD-WATER AQUACULTURE

A-E FIRM	USDA
PROJECT MANAGER: DAF	EPM
DESIGNER: JJH	PPM
CHECKED BY: DAF	SAFETY & HEALTH
DRAWN BY: JJH	REAL PROPERTY

SOLICITATION NO.
DATE: 04-07-2026

ROOF PLAN - LAB BUILDING

DWG. NO. A102
SHEET 7 OF 15

DAVID A. FYFE, P.E. REGISTERED 16421 STATE OF WEST VIRGINIA PROFESSIONAL ENGINEER

FILE NAME:
OUR REF: 212.009
PLOT DATE:

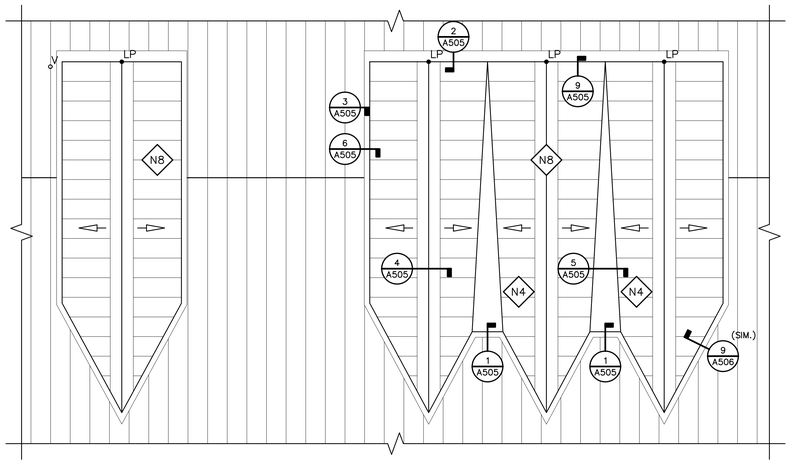

N 1 A103 LAB BUILDING LOUVERS NEW WORK PLAN
SCALE: 1:50 mm

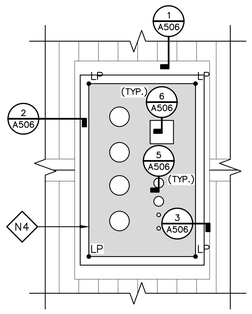

N 2 A103 LAB BUILDING EAST CHIMNEY NEW WORK PLAN
SCALE: 1:50 mm

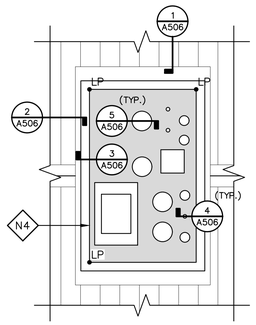

N 3 A103 LAB BUILDING WEST CHIMNEY NEW WORK PLAN
SCALE: 1:50 mm

GENERAL NOTES:

1. CONTRACTOR TO COORDINATE WITH GOVERNMENT WITH REGARD TO ACCESS AND STAGING.
2. THE CONTRACTOR IS RESPONSIBLE FOR OBTAINING ALL PERMITS REQUIRED FOR EXECUTION OF THE WORK OF THIS CONTRACT.
3. CONDUCT ALL OPERATIONS IN STRICT ACCORDANCE WITH OSHA AND OTHER ENTITIES HAVING JURISDICTION.
4. THE CONTRACTOR SHALL REMOVE ALL CONSTRUCTION DEBRIS FROM OWNERS PROPERTY AND DISPOSE ACCORDING TO LOCAL REGULATIONS WEEKLY.
5. REMOVE ONLY AS MUCH EXISTING ROOFING AS CAN BE REPLACED AND REMAIN WATERTIGHT DURING EACH SHIFT. PROVIDE WATERTIGHT TIE-INS BETWEEN NEW AND EXISTING WORK.
6. CONTRACTOR IS REQUIRED TO RESTORE ALL AREAS USED FOR ACCESS AND STAGING TO PRECONSTRUCTION CONDITION AT COMPLETION OF WORK.
7. BIOSECURITY MUST BE FOLLOWED WHEN OPERATING IN THE FOLLOWING LOCATIONS TO PROTECT FISH HEALTH: TANK ROOMS A-G, FISH HEALTH LABS 07, 08, 17, 18, AND ALONG THE BROODSTOCK BUILDING. FURTHER INFORMATION CAN BE FOUND ON THE BIOSECURITY STATEMENT ATTACHED TO THE BIOSECURITY STATEMENT IN THE SPECIFICATIONS.

NEW WORK KEYED NOTES:

N1 INSTALL LOOSE LAID VAPOR BARRIER OVER EXISTING ROOF. INSTALL STRUCTURAL ROOF SUBFRAMING SYSTEM TO EXISTING PURLINS. INSTALL POLYISOCYANURATE INSULATION LAYER. INSTALL ICE AND WATER SHIELD AT EAVES, RAKES AND RIDGES. INSTALL SYNTHETIC UNDERLAYMENT OVER ENTIRE ROOF. INSTALL 24 GAUGE (0.701 mm) PREFINISHED GALVANIZED STEEL ROOF PANELS WITH 2 3/4" (70 mm) STANDING SEAMS 18" (457 mm) ON CENTER. INSTALL ALL ACCESSORIES AND FLASHINGS AS INDICATED ON THE DETAILS AND AS REQUIRED TO PROVIDE A WATERTIGHT AND CODE COMPLIANT INSTALLATION.

N2 INSTALL SELF ADHERED VAPOR BARRIER (TEMP. ROOF) OVER METAL ROOF DECK. INSTALL TWO LAYERS OF POLYISOCYANURATE INSULATION (R30 TOTAL). INSTALL ICE AND WATER SHIELD AT EAVES, RAKES AND RIDGES. INSTALL SYNTHETIC UNDERLAYMENT OVER ENTIRE ROOF. INSTALL 24 GAUGE (0.701 mm) PREFINISHED GALVANIZED STEEL ROOF PANELS WITH 1 3/8" (35 mm) STANDING SEAMS 16" (406 mm) ON CENTER. INSTALL ALL ACCESSORIES AND FLASHINGS AS INDICATED ON THE DETAILS AND AS REQUIRED TO PROVIDE A WATERTIGHT AND CODE COMPLIANT INSTALLATION.

N3 INSTALL R38 FACED INSULATION OVER EXISTING PURLINS. INSATLL 1/2" (12 mm) PLYWOOD OVER EXISTING PURLINS. INSTALL 24 GAUGE (0.701 mm) PREFINISHED GALVANIZED STEEL ROOF PANELS WITH 1 3/8" (35 mm) STANDING SEAMS 16" (406 mm) ON CENTER. INSTALL ALL ACCESSORIES AND FLASHINGS AS INDICATED ON THE DETAILS AND AS REQIURED TO PROVIDE A WATERTIGHT AND CODE COMPLIANT INSTALLATION.

N4 INSTALL INSULATION, COVER BOARD AND PVC ROOFING MEMBRANE AT VALLEY AND "CHIMNEY" CAPS.

N5 SNOW GUARD W/ CLAMPS AT EACH SEAM

N6 SNOW GUARD W/ CLAMPS AT EVERY OTHER SEAM

N7 SNOW GUARD W/ CLAMPS AT EVERY THIRD SEAM

N8 INSATLL 1/2" (12 mm) PLYWOOD OVER EXISTING STUDS. INSTALL 24 GAUGE (0.701 mm) PREFINISHED GALVANIZED STEEL ROOF PANELS WITH 1 3/8" (35 mm) STANDING SEAMS 16" (406 mm) ON CENTER. INSTALL ALL ACCESSORIES AND FLASHINGS AS INDICATED ON THE DETAILS AND AS REQIURED TO PROVIDE A WATERTIGHT AND CODE COMPLIANT INSTALLATION.

LEGEND:

V	VENT PIPE		PVC MEMBRANE
VS	VENT STACK		METAL ROOF
LP	LIGHTNING PROTECTION		ROOF SLOPE
DS	DOWNSPOUT	TYP.	TYPICAL
	EXISTING SNOW RAILS/GUARDS	N.I.C.	NOT IN CONTRACT
	NEW SNOW RAILS/GUARDS	L	LIGHTING POST

SEAL ENGINEERING INC.
3323 DUKE STREET ALEXANDRIA, VIRGINIA 22314
703-823-6366 | www.seal-eng.com

SUMMER CONSULTANTS INCORPORATED
7900 Westpark Dr. | Suite A405 | McLean, VA 22102
(703) 556-8820 | www.summerconsultants.com

NO.	DATE	BY	DESCRIPTION

REVISIONS

USDA

Agricultural Research Service

ROOF REPAIRS NCCCWA
KEARNEYSVILLE, WEST VIRGINIA
NATIONAL CENTER FOR COOL AND THE COLD-WATER AQUACULTURE

A-E FIRM	USDA
PROJECT MANAGER DAF	EPM
DESIGNER JJH	PPM
CHECKED BY DAF	SAFETY & HEALTH
DRAWN BY JJH	REAL PROPERTY

SOLICITATION NO.

DATE 04-07-2026

PARTIAL ROOF PLANS - LAB BUILDING

DWG. NO. A103

SHEET 8 OF 15

DAVID A. FYFFE REGISTERED 16421 STATE OF WEST VIRGINIA PROFESSIONAL ENGINEER

FILE NAME:
OUR REF: 212.009
PLOT DATE:

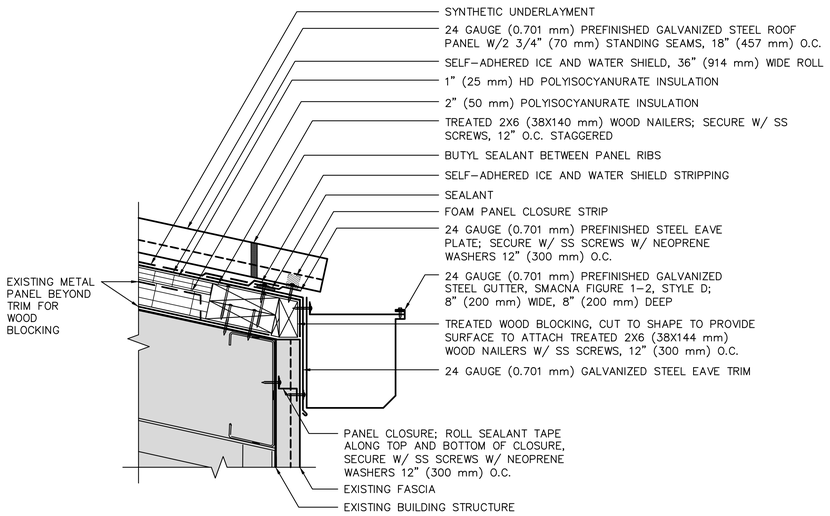

1 A501 **FIXED EAVE WITH GUTTER**
SCALE: 1:5 mm

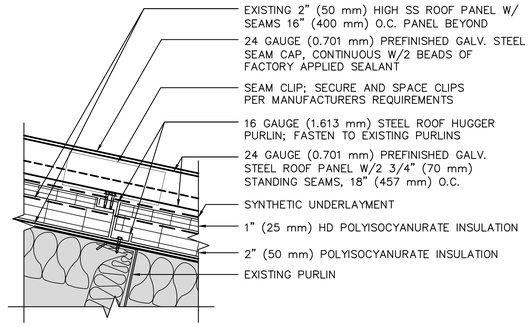

2 A501 **TYPICAL ROOF SECTION**
SCALE: 1:5 mm

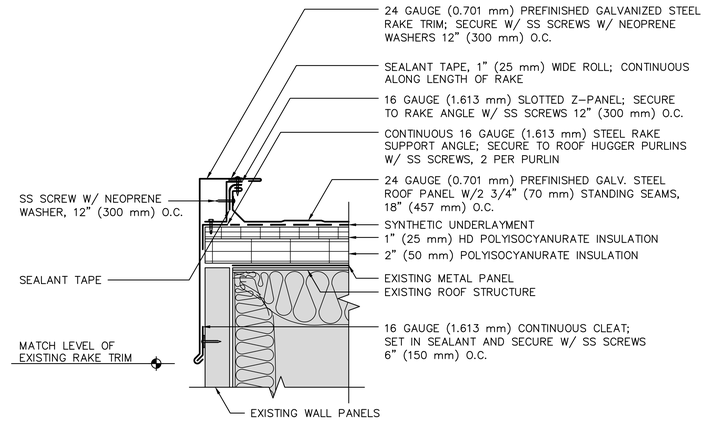

3 A501 **RAKE**
SCALE: 1:5 mm

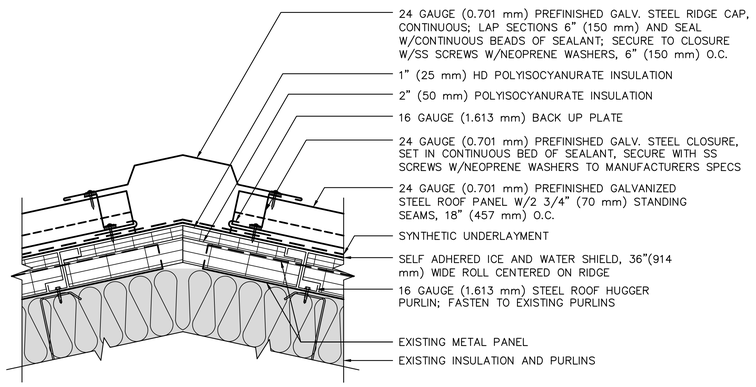

4 A501 **RIDGE**
SCALE: 1:5 mm

*SEAM CLIPS NOT SHOWN; SECURE AND SPACE CLIPS TO ROOF HUGGER PURLINS PER MANUFACTURERS REQUIREMENTS

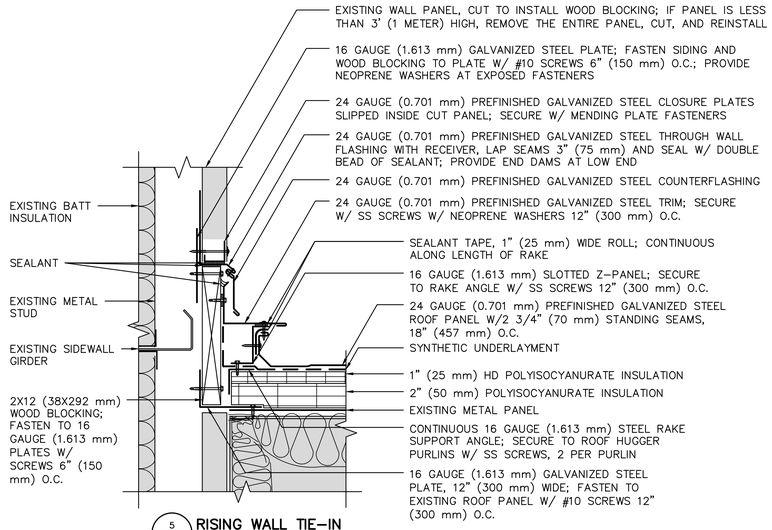

5 A501 **RISING WALL TIE-IN**
SCALE: 1:5 mm

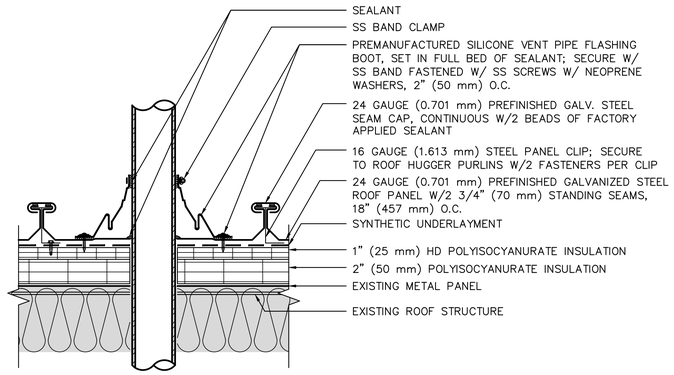

6 A501 **PIPE PENETRATION**
SCALE: 1:5 mm

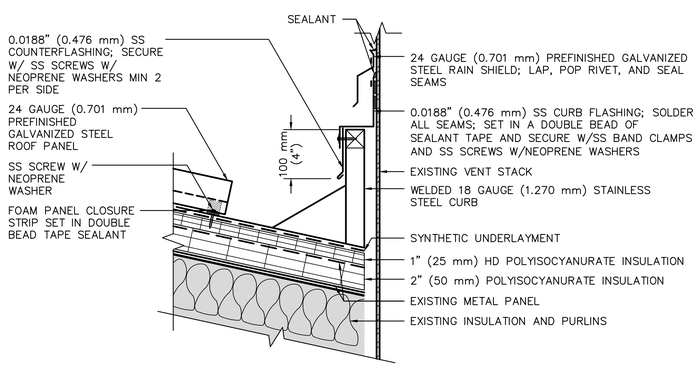

7a A501 **PIPE PENETRATION**
SCALE: 1:5 mm

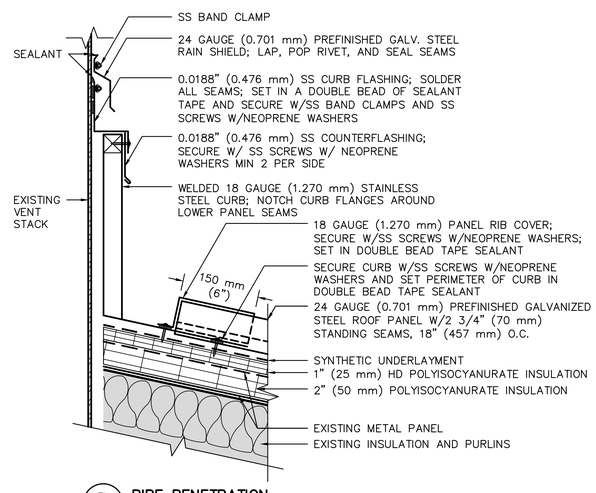

7b A501 **PIPE PENETRATION**
SCALE: 1:5 mm

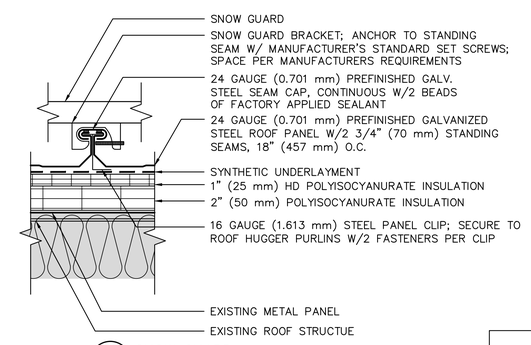

8 A501 **SNOW GUARD**
SCALE: 1:5 mm

SEAL ENGINEERING INC.
3323 DUKE STREET ALEXANDRIA, VIRGINIA 22314
703-823-6366 | www.seal-eng.com

SUMMER CONSULTANTS INCORPORATED
7900 Westpark Dr. | Suite A405 | McLean, VA 22102
(703) 556-8820 | www.summerconsultants.com

NO.	DATE	BY	DESCRIPTION

REVISIONS

USDA Agricultural Research Service

ROOF REPAIRS NCCCWA
KEARNEYSVILLE, WEST VIRGINIA
NATIONAL CENTER FOR COOL AND THE COLD-WATER AQUACULTURE

A-E FIRM	USDA
PROJECT MANAGER: DAF	EPM
DESIGNER: JJH	PPM
CHECKED BY: DAF	SAFETY & HEALTH
DRAWN BY: JJH	REAL PROPERTY

SOLICITATION NO.
DATE: 04-07-2026
ROOF DETAILS - TANK BUILDING
DWG. NO. A501
SHEET 9 OF 15

DAVID A. FYSE, P.E. REGISTERED 16421 STATE OF WEST VIRGINIA PROFESSIONAL ENGINEER

FILE NAME:
OUR REF: 212.009
PLOT DATE:

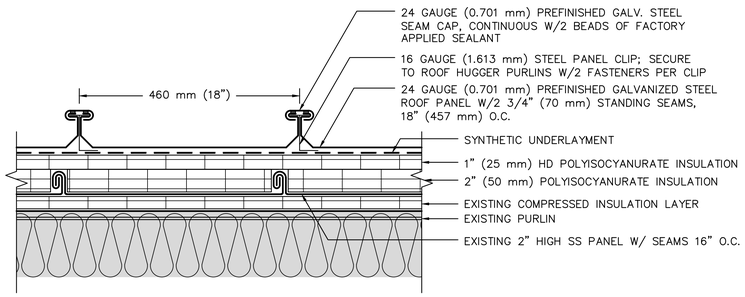

1 A502 TYPICAL ROOF SECTION PERPENDICULAR TO SLOPE
SCALE: 1:5 mm

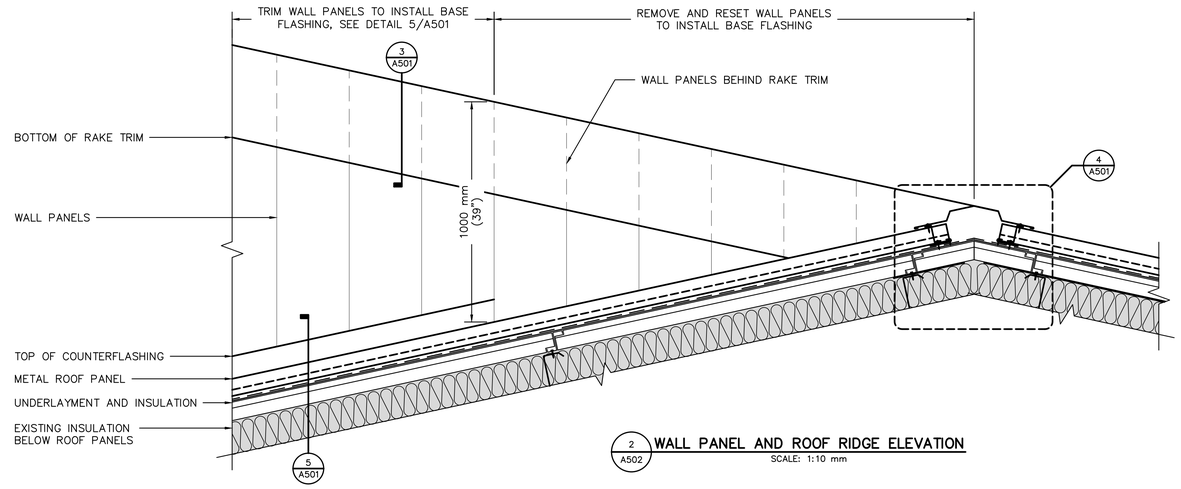

2 A502 WALL PANEL AND ROOF RIDGE ELEVATION
SCALE: 1:10 mm

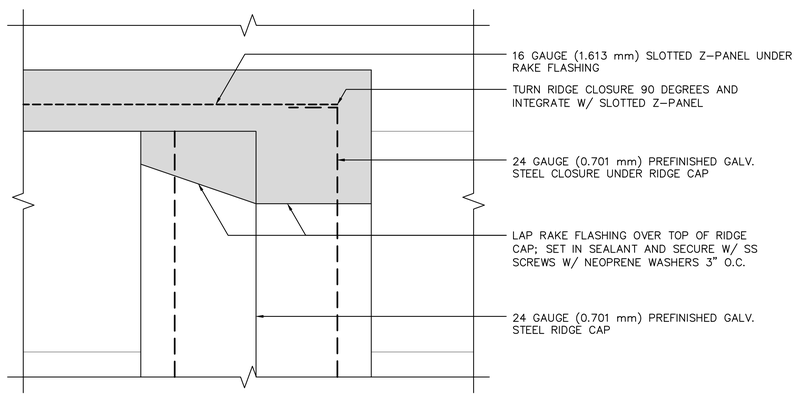

3 A502 RIDGE AND RAKE CLOSURE INTERSECTION PLAN
SCALE: 1:10 mm

SEAL ENGINEERING INC.
3323 DUKE STREET ALEXANDRIA, VIRGINIA 22314
703-823-6366 | www.seal-eng.com

SUMMER CONSULTANTS INCORPORATED
7900 Westpark Dr. | Suite A405 | McLean, VA 22102
(703) 556-8820 | www.summerconsultants.com

NO.	DATE	BY	DESCRIPTION

REVISIONS

A-E FIRM	USDA
PROJECT MANAGER DAF	EPM
DESIGNER JJH	PPM
CHECKED BY DAF	SAFETY & HEALTH
DRAWN BY JJH	REAL PROPERTY

USDA

Agricultural Research Service

ROOF REPAIRS NCCCWA

KEARNEYSVILLE, WEST VIRGINIA

NATIONAL CENTER FOR COOL AND THE COLD-WATER AQUACULTURE

SOLICITATION NO.

DATE 04-07-2026

ROOF DETAILS - TANK BUILDING

DWG. NO. A502

SHEET 10 OF 15

DAVID A. FYFFE REGISTERED 16421 STATE OF WEST VIRGINIA PROFESSIONAL ENGINEER

FILE NAME:
OUR REF: 212.009
PLOT DATE:

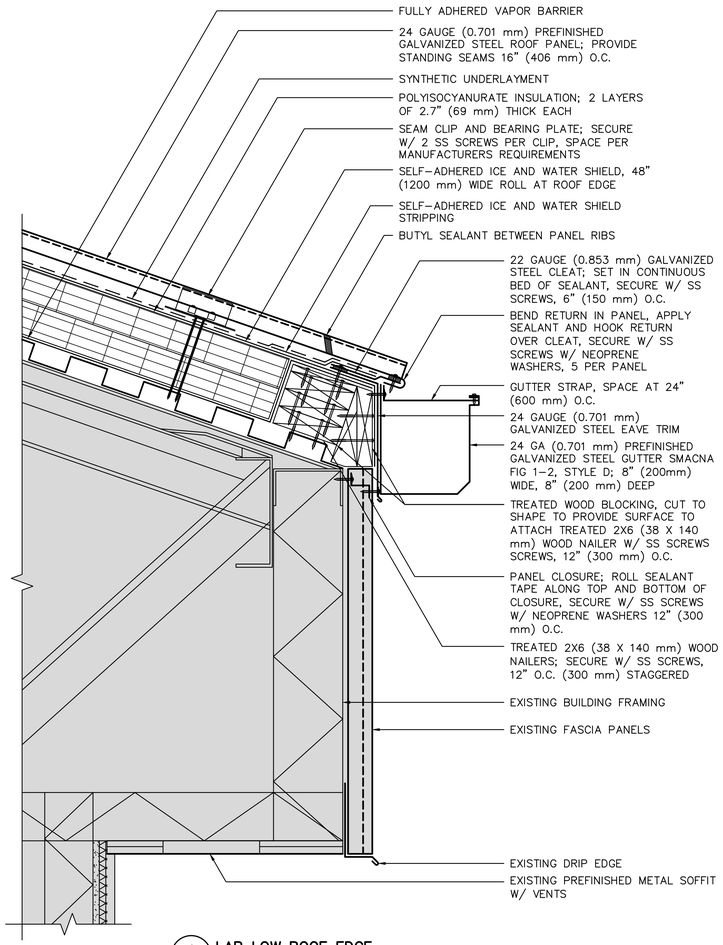

1 A503 **LAB LOW ROOF EDGE**
SCALE: 1:5 mm

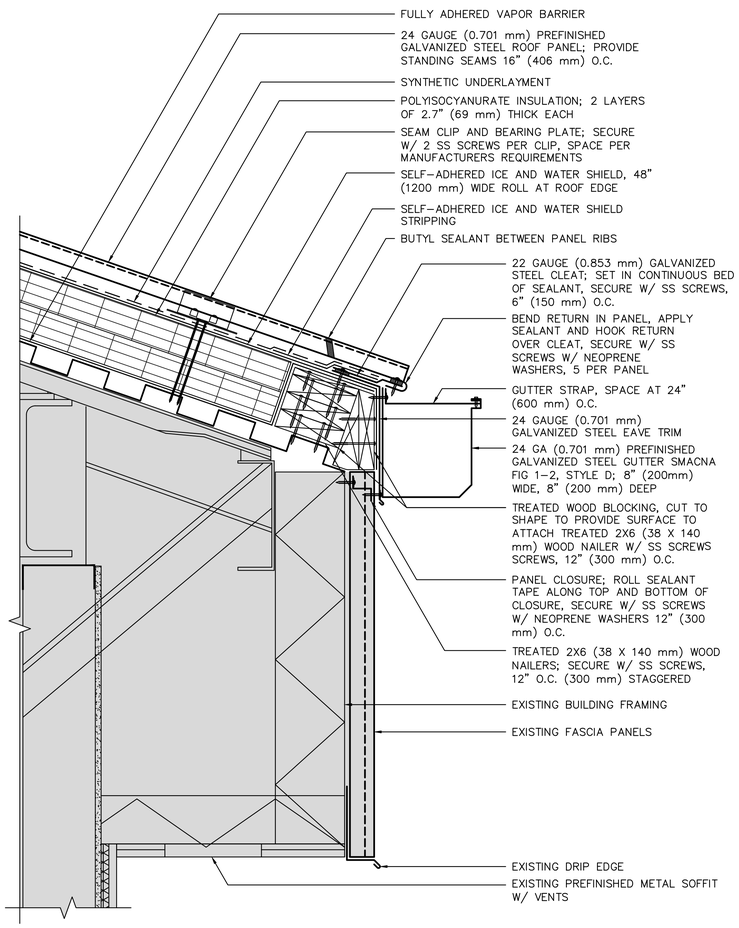

2 A503 **LAB HIGH ROOF EDGE**
SCALE: 1:5 mm

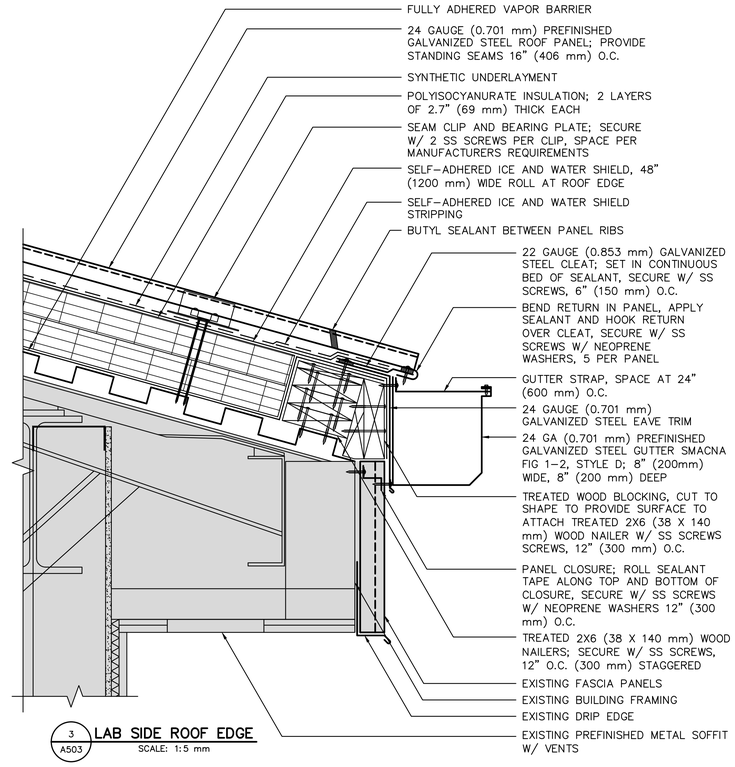

3 A503 **LAB SIDE ROOF EDGE**
SCALE: 1:5 mm

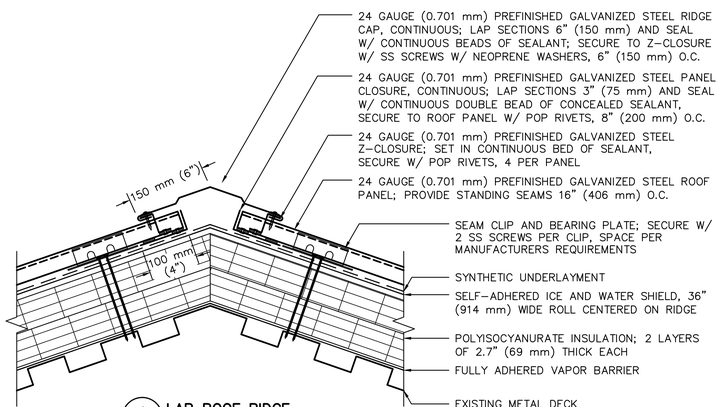

4 A503 **LAB ROOF RIDGE**
SCALE: 1:5 mm

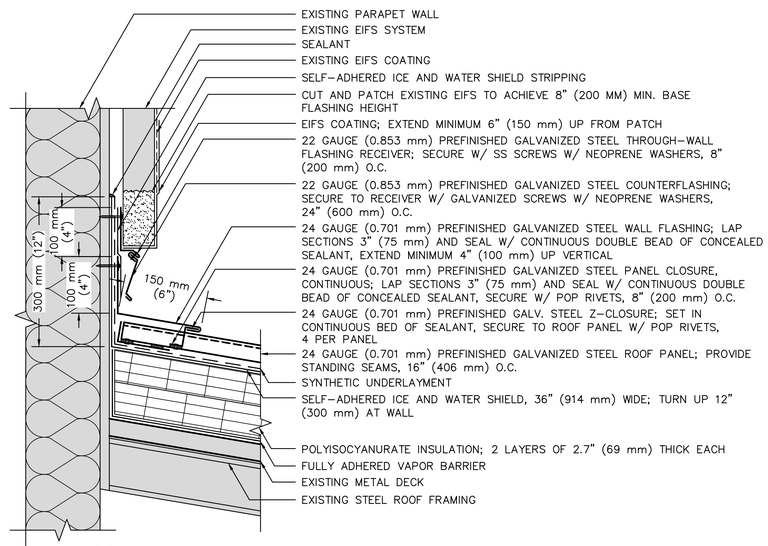

5 A503 **LAB HEADWALL**
SCALE: 1:5 mm

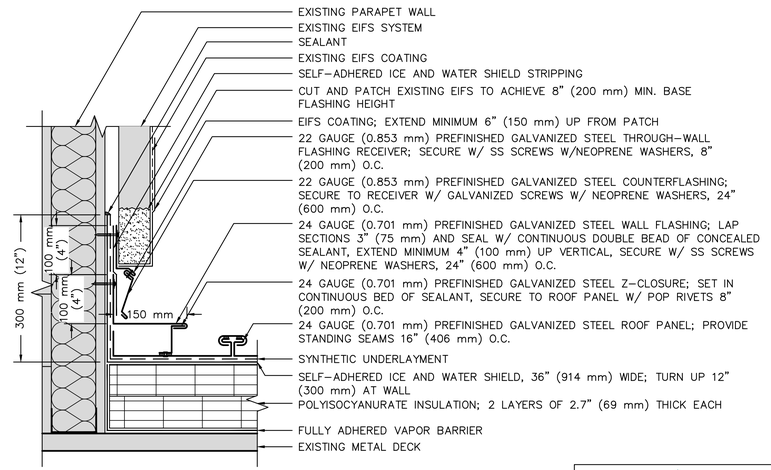

6 A503 **LAB SIDEWALL**
SCALE: 1:5 mm

SEAL ENGINEERING INC.
3323 DUKE STREET ALEXANDRIA, VIRGINIA 22314
703-823-6366 | www.seal-eng.com

SUMMER CONSULTANTS INCORPORATED
7900 Westpark Dr. | Suite A405 | McLean, VA 22102
(703) 556-8820 | www.summerconsultants.com

NO.	DATE	BY	DESCRIPTION

REVISIONS

A-E FIRM: USDA

PROJECT MANAGER: DAF
EPM:
DESIGNER: JJH
PPM:
CHECKED BY: DAF
SAFETY & HEALTH:
DRAWN BY: JJH
REAL PROPERTY:

USDA

Agricultural Research Service

ROOF REPAIRS NCCCWA
KEARNEYSVILLE, WEST VIRGINIA
NATIONAL CENTER FOR COOL AND THE COLD-WATER AQUACULTURE

SOLICITATION NO.
DATE: 04-07-2026

ROOF DETAILS - LAB BUILDING

DWG. NO. A503
SHEET 11 OF 15

DAVID A. FYFE, P.E. REGISTERED 18421 STATE OF WEST VIRGINIA PROFESSIONAL ENGINEER

FILE NAME:
OUR REF: 212.009
PLOT DATE:

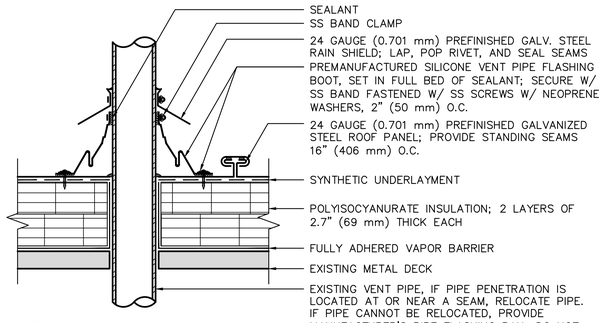

1 A504 LAB PIPE PENETRATION
SCALE: 1:5 mm

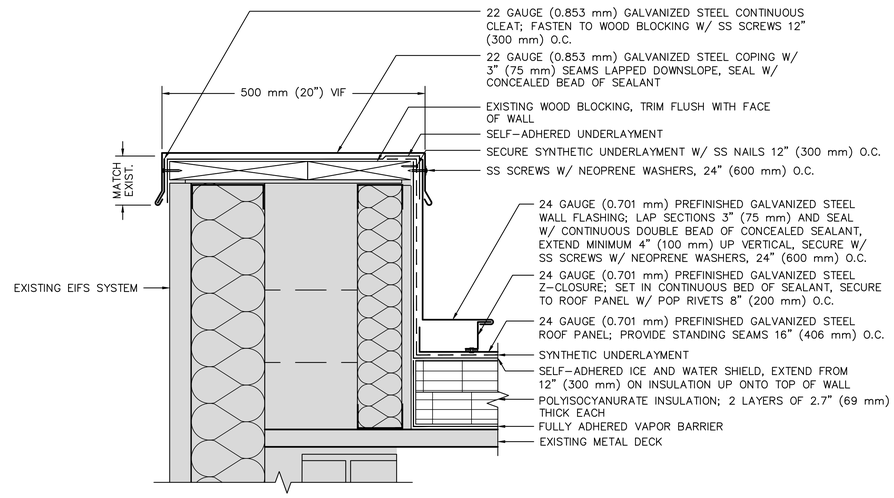

2 A504 PARAPET COPING
SCALE: 1:5 mm

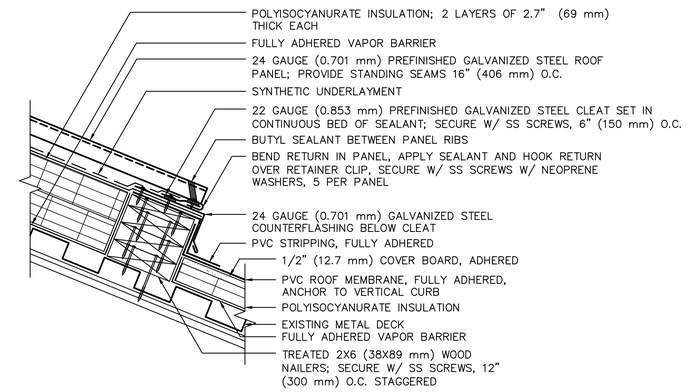

3 A504 LAB ROOF METAL TO PVC TRANSITION
SCALE: 1:5 mm

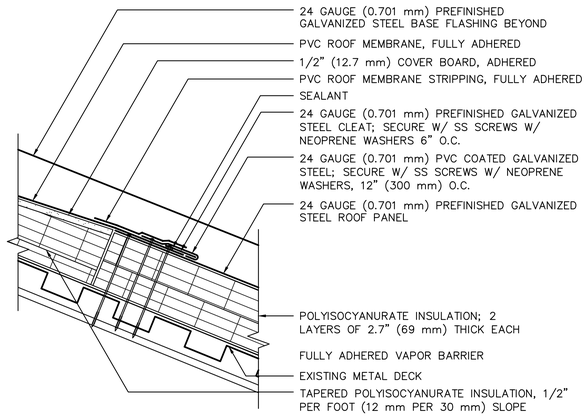

4 A504 PVC TO METAL PANEL LOWER TRANSITION
SCALE: 1:5 mm

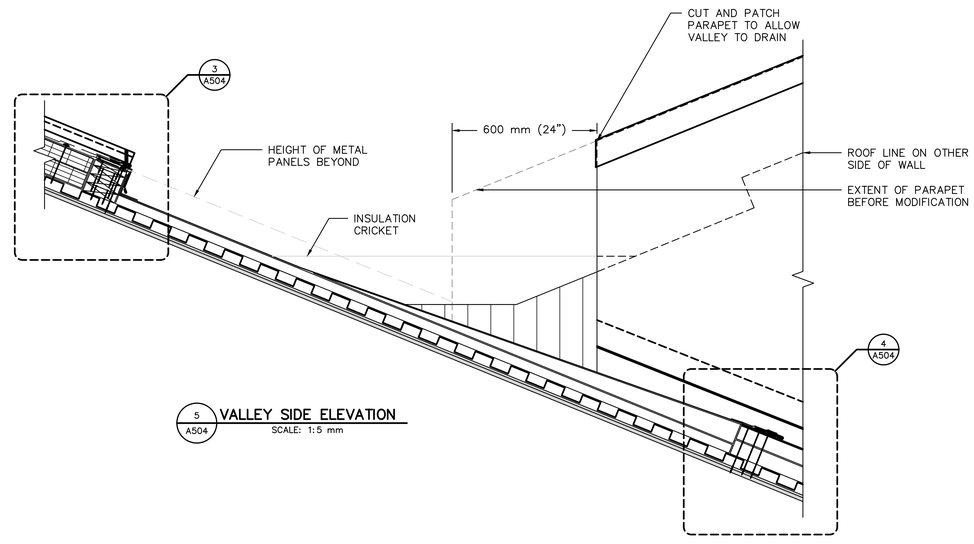

5 A504 VALLEY SIDE ELEVATION
SCALE: 1:5 mm

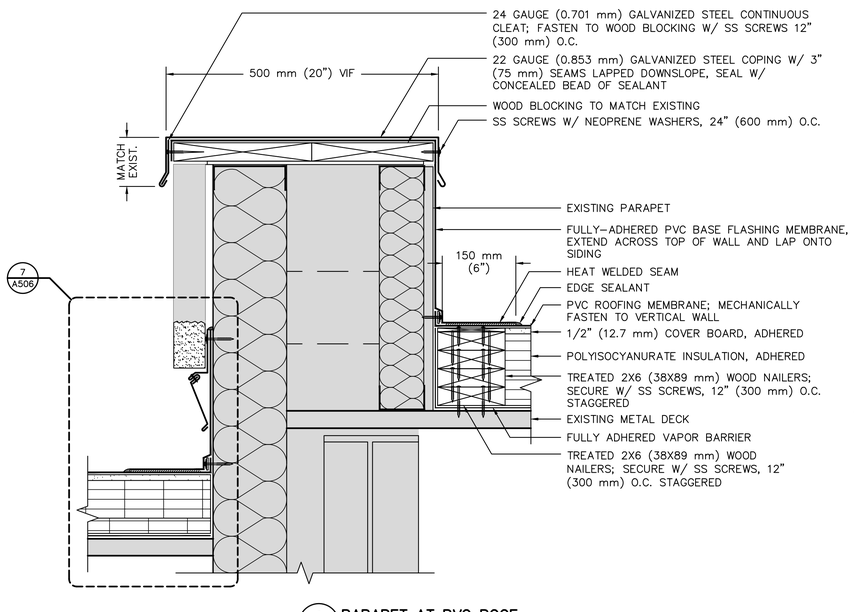

6 A504 PARAPET AT PVC ROOF
SCALE: 1:5 mm

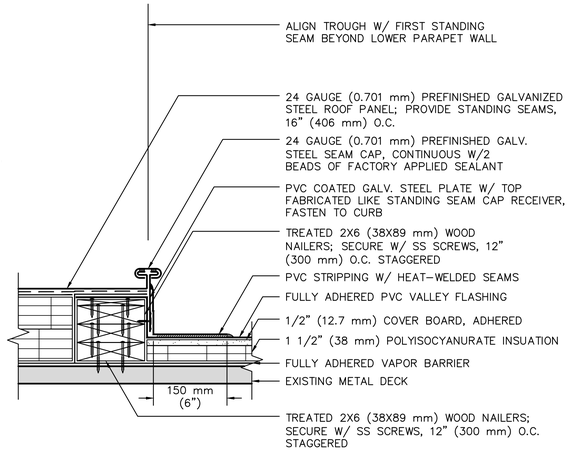

8 A504 VALLEY FLASHING TO METAL ROOF PANEL TRANSITION
SCALE: 1:5 mm

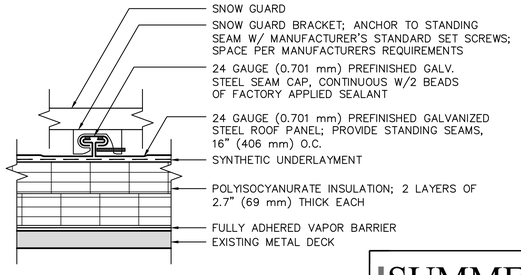

7 A504 SNOW GUARD
SCALE: 1:5 mm

SEAL ENGINEERING INC.
3328 DUKE STREET ALEXANDRIA, VIRGINIA 22314
703-823-6366 | www.seal-eng.com

SUMMER CONSULTANTS INCORPORATED
7900 Westpark Dr. | Suite A405 | McLean, VA 22102
(703) 556-8820 | www.summerconsultants.com

NO.	DATE	BY	DESCRIPTION

REVISIONS

A-E FIRM: USDA

USDA Agricultural Research Service

ROOF REPAIRS NCCCWA
KEARNEYSVILLE, WEST VIRGINIA
NATIONAL CENTER FOR COOL AND THE COLD-WATER AQUACULTURE

PROJECT MANAGER: DAF	EPM
DESIGNER: JJH	PPM
CHECKED BY: DAF	SAFETY & HEALTH
DRAWN BY: JJH	REAL PROPERTY
SOLICITATION NO.	
DATE: 04-07-2026	

ROOF DETAILS - LAB BUILDING

DWG. NO. A504
SHEET 12 OF 15

DAVID A. FYFE III REGISTERED 16421 STATE OF WEST VIRGINIA PROFESSIONAL ENGINEER

FILE NAME:
OUR REF: 212.009
PLOT DATE:

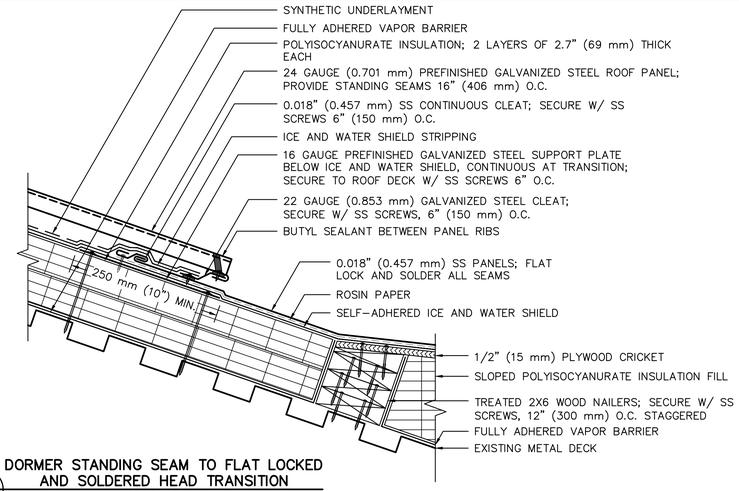

1 A505 **DORMER STANDING SEAM TO FLAT LOCKED AND SOLDERED HEAD TRANSITION**
SCALE: 1:5 mm

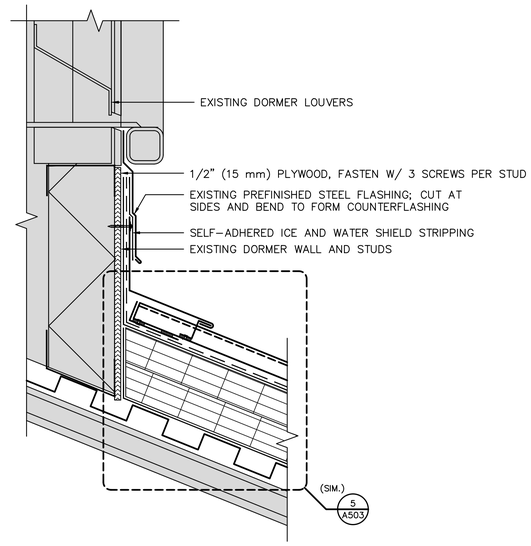

2 A505 **DORMER BASE HEADWALL**
SCALE: 1:5 mm

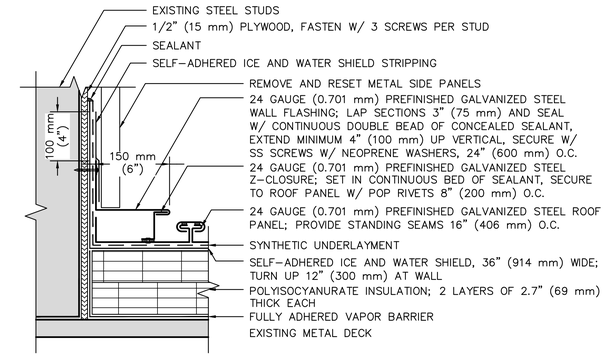

3 A505 **DORMER BASE SIDEWALL**
SCALE: 1:5 mm

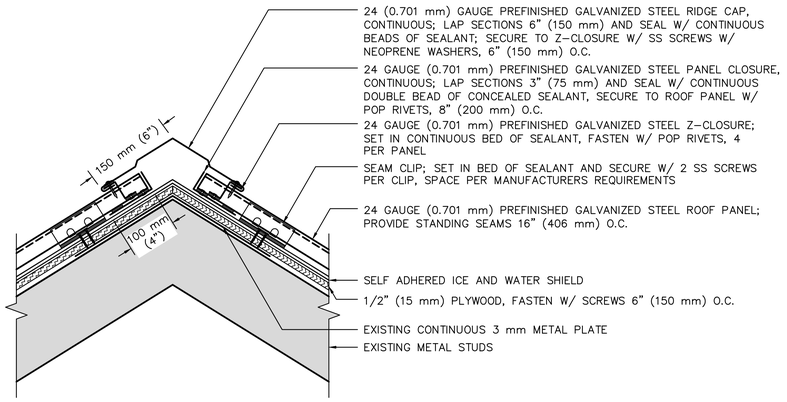

4 A505 **DORMER STANDING SEAM RIDGE**
SCALE: 1:5 mm

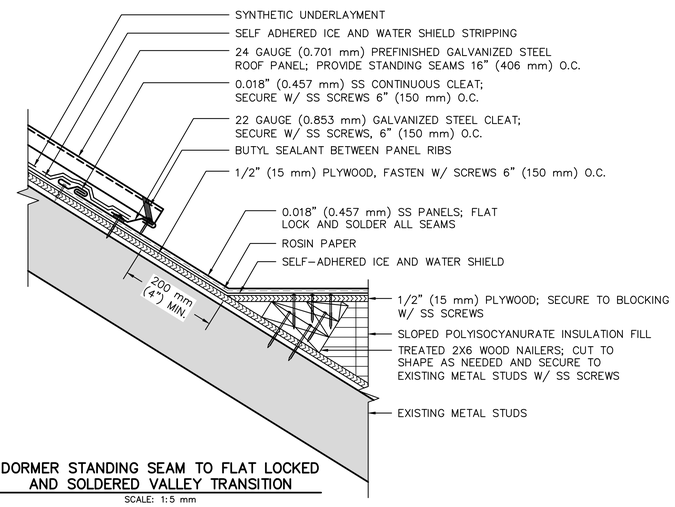

5 A505 **DORMER STANDING SEAM TO FLAT LOCKED AND SOLDERED VALLEY TRANSITION**
SCALE: 1:5 mm

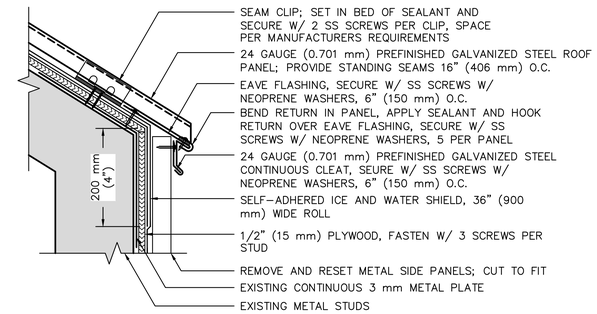

6 A505 **DORMER STANDING SEAM EAVE**
SCALE: 1:5 mm

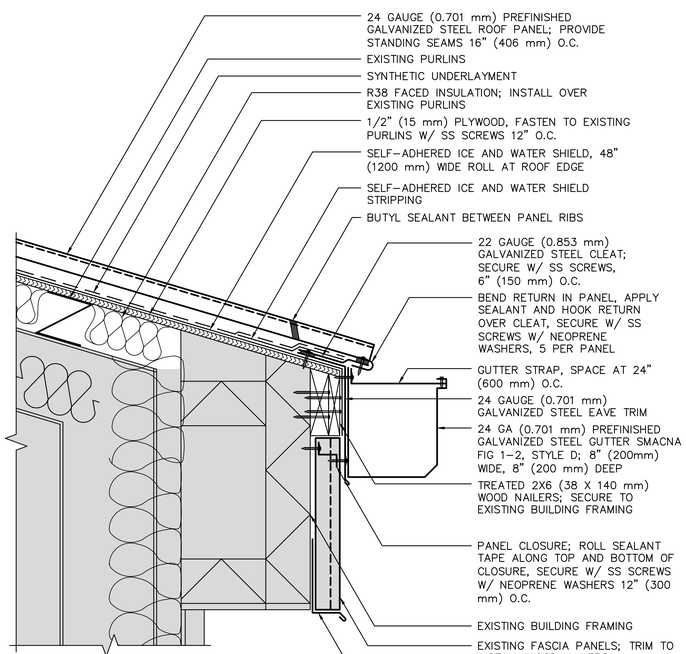

7 A505 **CONNECTING HALLWAY EDGE WITH GUTTER**
SCALE: 1:5 mm

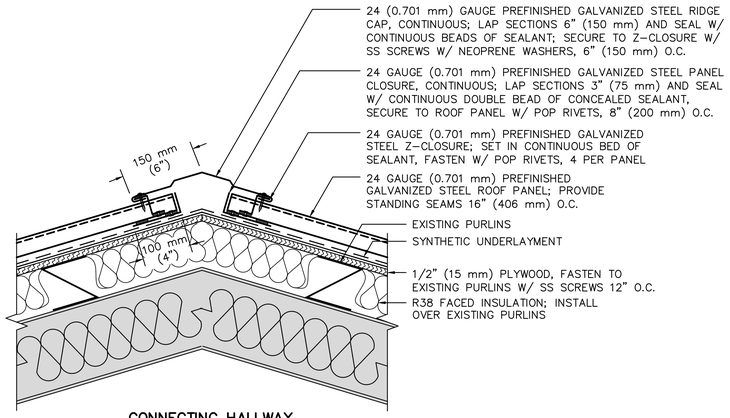

8 A505 **CONNECTING HALLWAY RIDGE**
SCALE: 1:5 mm

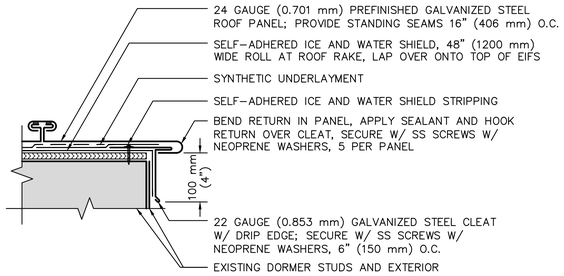

9 A505 **DORMER RAKE**
SCALE: 1:5 mm

SEAL ENGINEERING INC.
3323 DUKE STREET ALEXANDRIA, VIRGINIA 22314
703-823-6366 | www.seal-eng.com

SUMMER CONSULTANTS INCORPORATED
7900 Westpark Dr. | Suite A405 | McLean, VA 22102
(703) 556-8820 | www.summerconsultants.com

NO.	DATE	BY	DESCRIPTION

REVISIONS

A-E FIRM	USDA
PROJECT MANAGER: DAF	EPM
DESIGNER: JJH	PPM
CHECKED BY: DAF	SAFETY & HEALTH
DRAWN BY: JJH	REAL PROPERTY

USDA — Agricultural Research Service

ROOF REPAIRS NCCCWA
KEARNEYSVILLE, WEST VIRGINIA
NATIONAL CENTER FOR COOL AND THE COLD-WATER AQUACULTURE

SOLICITATION NO.
DATE: 04-07-2026

ROOF DETAILS - LAB BUILDING

DWG. NO. A505
SHEET 13 OF 15

DAVID A. FYNE REGISTERED 16421 STATE OF WEST VIRGINIA PROFESSIONAL ENGINEER

FILE NAME:
OUR REF: 212.009
PLOT DATE:

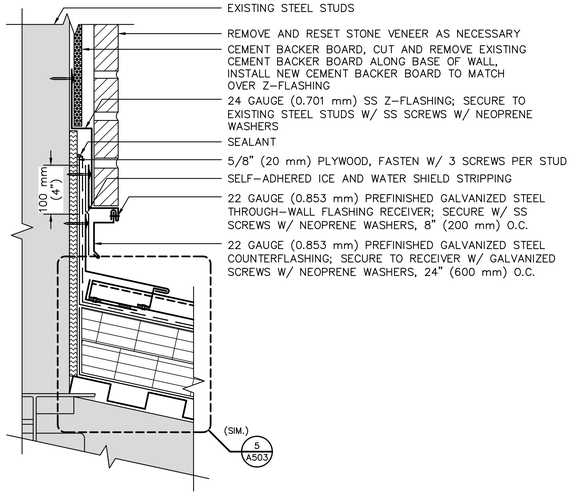

1 A506 **CHIMNEY BASE HEADWALL**
SCALE: 1:5 mm

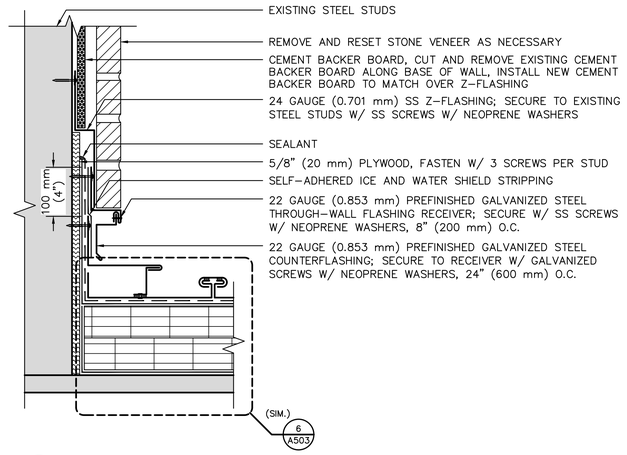

2 A506 **CHIMNEY BASE SIDEWALL**
SCALE: 1:5 mm

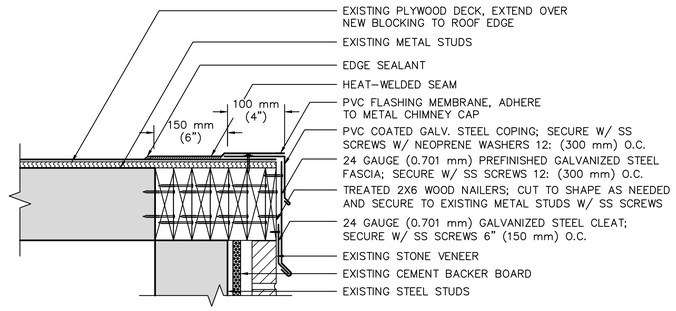

3 A506 **CHIMNEY TOP METAL TO MEMBRANE**
SCALE: 1:5 mm

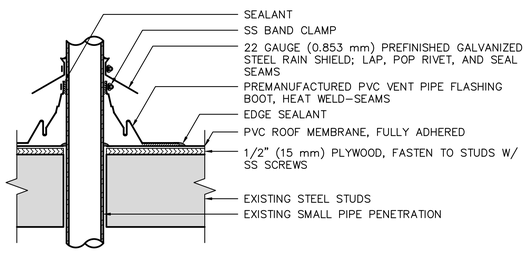

4 A506 **CHIMNEY PIPE PENETRATION – SMALL**
SCALE: 1:5 mm

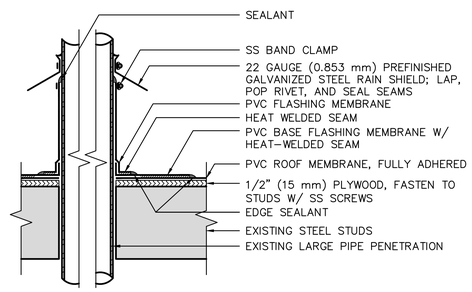

5 A506 **CHIMNEY PIPE PENETRATION – LARGE**
SCALE: 1:5 mm

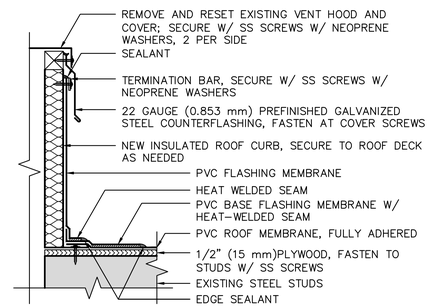

6 A506 **CHIMNEY CURB FLASHING**
SCALE: 1:5 mm

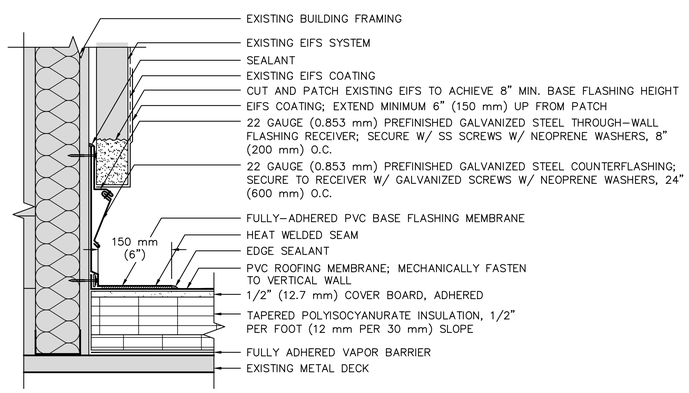

7 A506 **EIFS PATCH AT PVC BASE FLASHING**
SCALE: 1:5 mm

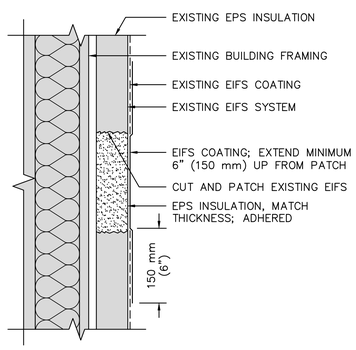

8 A506 **GENERIC EIFS PATCH**
SCALE: 1:5 mm

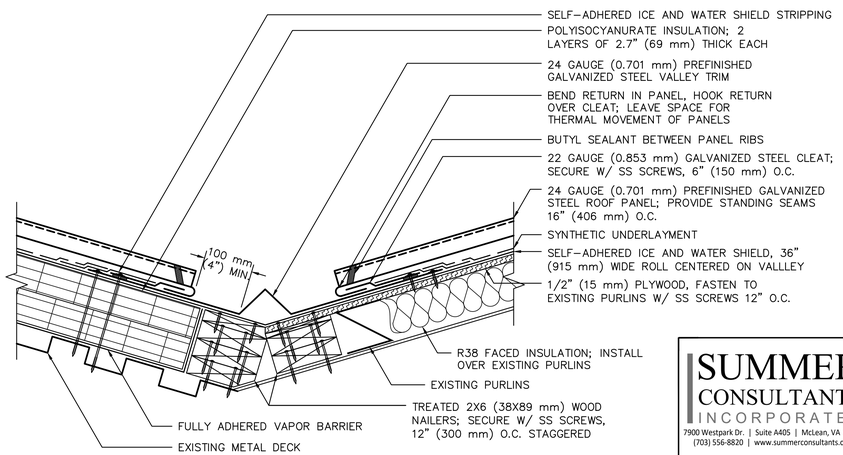

9 A506 **METAL VALLEY**
SCALE: 1:5 mm

SEAL ENGINEERING INC.
3323 DUKE STREET ALEXANDRIA, VIRGINIA 22314
703-823-6366 | www.seal-eng.com

SUMMER CONSULTANTS INCORPORATED
7900 Westpark Dr. | Suite A405 | McLean, VA 22102
(703) 556-8820 | www.summerconsultants.com

NO.	DATE	BY	DESCRIPTION

REVISIONS

A–E FIRM: USDA

PROJECT MANAGER: DAF
EPM:
DESIGNER: JJH
PPM:
CHECKED BY: DAF
SAFETY & HEALTH:
DRAWN BY: JJH
REAL PROPERTY:

USDA — Agricultural Research Service

ROOF REPAIRS NCCCWA
KEARNEYSVILLE, WEST VIRGINIA
NATIONAL CENTER FOR COOL AND THE COLD-WATER AQUACULTURE

SOLICITATION NO.:
DATE: 04-07-2026

ROOF DETAILS - LAB BUILDING

DWG. NO.: A506
SHEET 14 OF 15

DAVID A. FYFFE REGISTERED 18421 STATE OF WEST VIRGINIA PROFESSIONAL ENGINEER

FILE NAME:
OUR REF: 212.009
PLOT DATE:

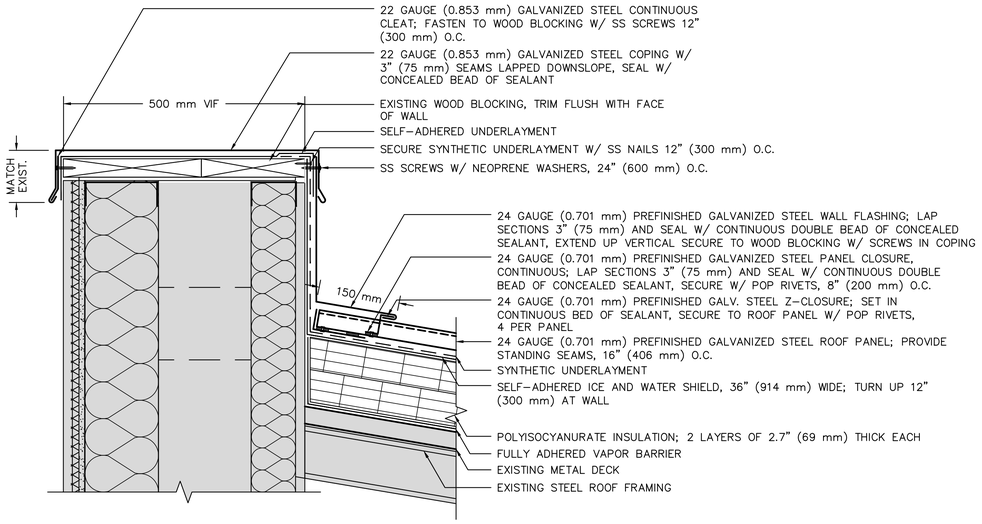

1 A507 **PARAPET WITH HEADWALL FLASHING**
SCALE: 1:5 mm

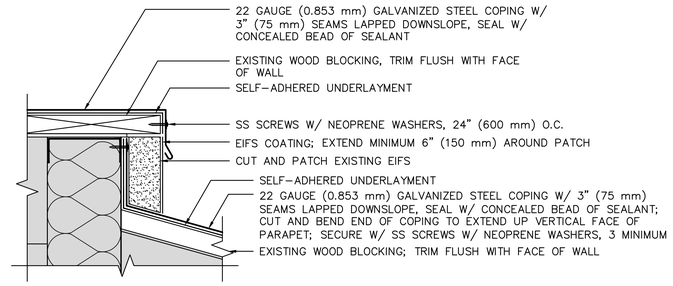

2 A507 **PARAPET COPING AT EIFS**
SCALE: 1:5 mm

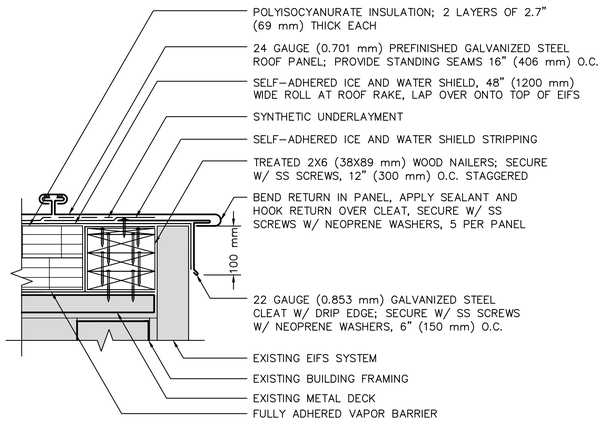

3 A507 **RAKE AT LOADING DOOR ROOF**
SCALE: 1:5 mm

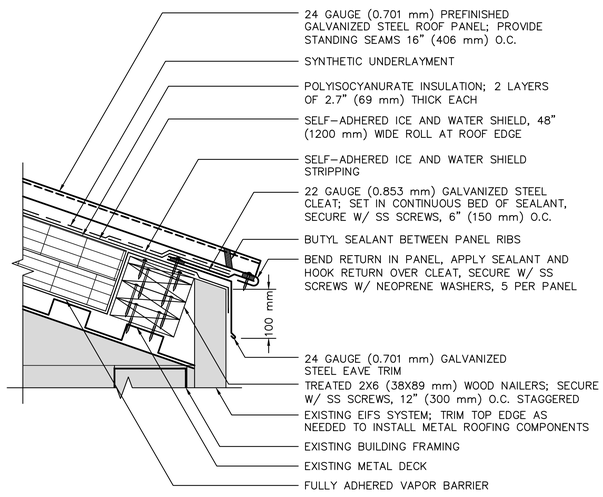

4 A507 **EAVE AT LOADING DOOR ROOF**
SCALE: 1:5 mm

SEAL ENGINEERING INC.
3323 DUKE STREET ALEXANDRIA, VIRGINIA 22314
703-823-6366 | www.seal-eng.com

SUMMER CONSULTANTS INCORPORATED
7900 Westpark Dr. | Suite A405 | McLean, VA 22102
(703) 556-8820 | www.summerconsultants.com

NO.	DATE	BY	DESCRIPTION

REVISIONS

A-E FIRM: USDA

PROJECT MANAGER: DAF
EPM:
DESIGNER: JJH
PPM:
CHECKED BY: DAF
SAFETY & HEALTH:
DRAWN BY: JJH
REAL PROPERTY:

USDA — Agricultural Research Service

ROOF REPAIRS NCCCWA
KEARNEYSVILLE, WEST VIRGINIA
NATIONAL CENTER FOR COOL AND THE COLD-WATER AQUACULTURE

SOLICITATION NO.:
DATE: 04-07-2026

ROOF DETAILS - LAB BUILDING

DWG. NO.: A507
SHEET 15 OF 15

DAVID A. FYFE, P.E. REGISTERED 18421 STATE OF WEST VIRGINIA PROFESSIONAL ENGINEER

FILE NAME:
OUR REF: 212.009
PLOT DATE: