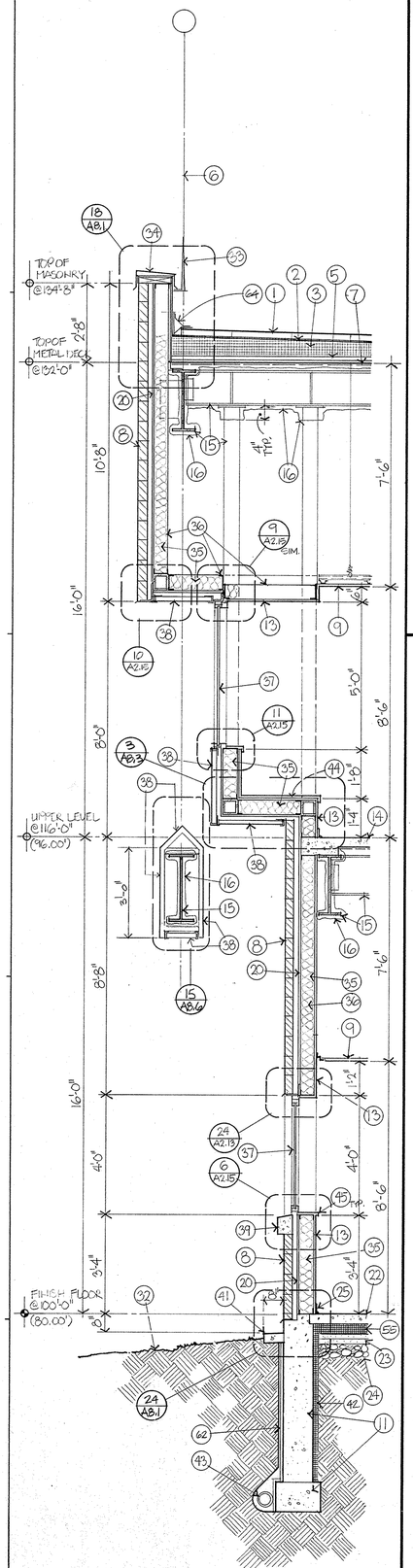

25 WALL SECTION 1/2"

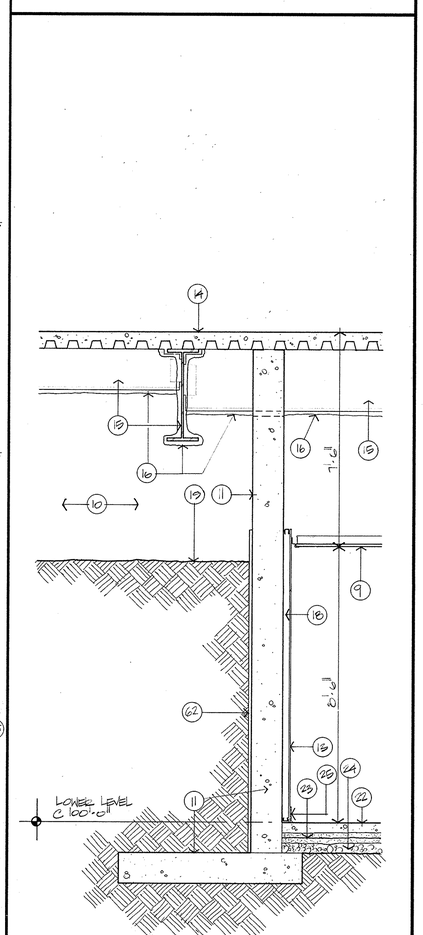

24 WALL SECTION @ RET. WALL 1/2"

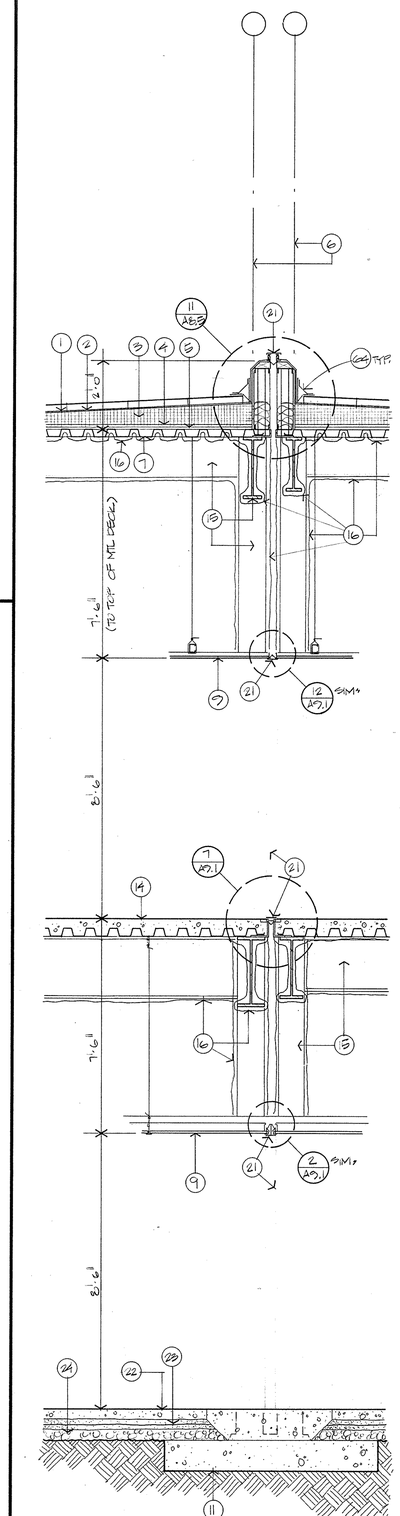

23 WALL SECTION @ EXP. JOINT 1/2"

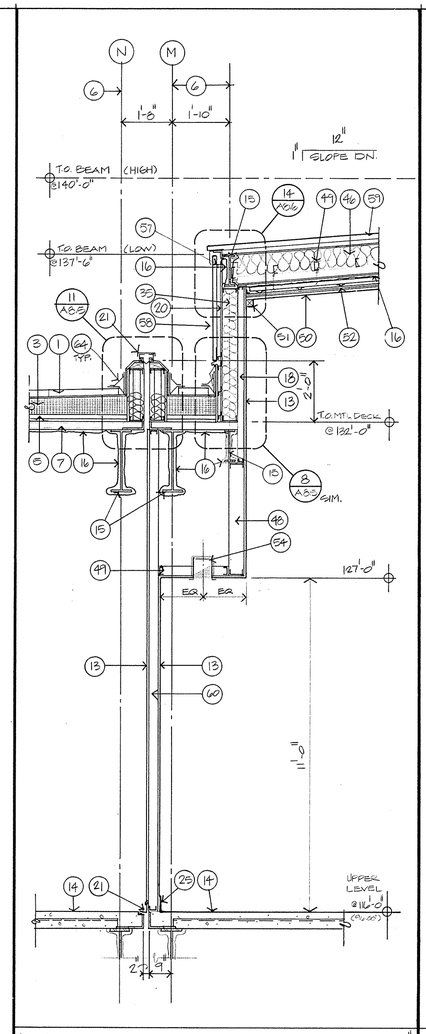

12 WALL SECTION @ CLERESTORY 1/2"

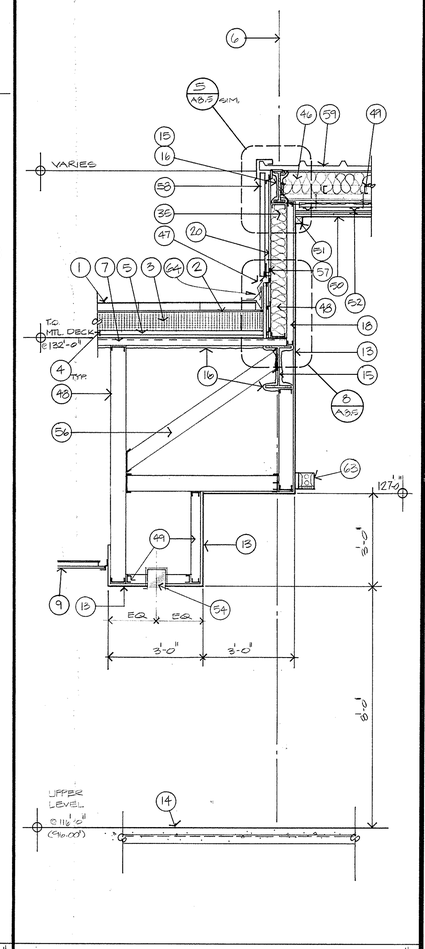

11 WALL SECTION @ CLERESTORY 1/2"

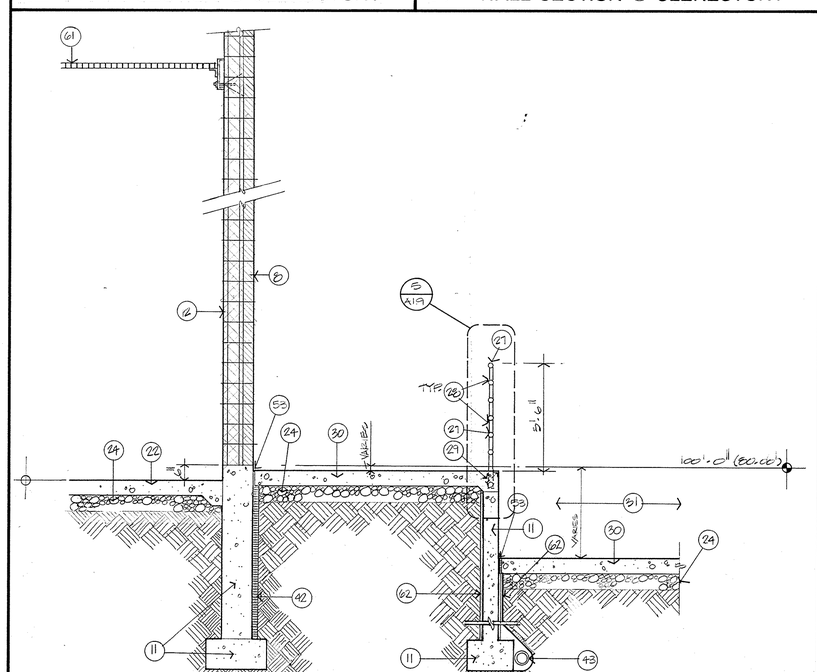

22 WALL SECTION @ LOADING DOCK 1/2"

Wyatt/Rhodes architects inc.
ARCHITECTURE
PLANNING
PHOENIX

REGISTERED ARCHITECT REG. NO. 4098 BURTON W. WYATT SOUTH DAKOTA

KEY NOTES

1 T & G CONCRETE CLAD EXTRUDED POLYSTYRENE INSULATED ROOF PANEL
2 ROOFING MEMBRANE
3 TAPERED RIGID INSULATION
4 ASPHALT MEMBRANE VAPOR RETARDER
5 (2) LAYERS PERLITE RIGID INSULATION HOT MOPPED TOGETHER
6 GRIDLIINE - SEE ARCHITECTURAL FLOOR PLANS
7 STEEL ROOF DECK
8 BRICK MASONRY
9 SUSPENDED CEILING SYSTEM - SEE INTERIOR FINISH SCHEDULE
10 CRAWL SPACE
11 FOUNDATION AND FOOTING - SEE STRUCTURAL
12 CONCRETE MASONRY UNIT
13 GYPSUM BOARD
14 STEEL COMPOSITE FLOOR DECK - SEE STRUCTURAL
15 STEEL STRUCTURE - SEE STRUCTURAL
16 SPRAY FIRE PROTECTION - SEE FIRE PROTECTION SCHEDULE SHEET A11.1
17
18 2-1/2" METAL STUDS @ 16" O.C.
19 EXPOSED EARTH
20 ASPHALT FELT VAPOR BARRIER ON EXTERIOR GYPUM BOARD SHEATHING (TYP.)
21 EXPANSION JOINT COVER
22 CONCRETE FLOOR SLAB - SEE STRUCTURAL
23 2" SAND ON 6 MIL POLYETHYLENE VAPOR BARRIER ON 2" SAND
24 AGGREGATE BASE COURSE - SEE STRUCTURAL
25 RESILIENT BASE
26 STEEL GRATING - SEE STRUCTURAL
27 1-1/2" DIAMETER STEEL PIPE RAIL
28 1-1/2" DIAMETER STEEL PIPE RAIL @ 5" O.C., TYPICAL
29 SLEEVE IN CONCRETE
30 CONCRETE SLAB - SEE STRUCTURAL
31 LOADING DOCK
32 FINISH GRADE
33 LIGHTNING PROTECTION
34 PREFINISHED ALUMINUM COPING
35 R-19 BATT INSULATION
36 6" STRUCTURAL STEEL STUDS @ 16" O.C.
37 WINDOW
38 PREFORMED METAL WALL AND SOFFIT PANELS
39 PRE-CAST CONCRETE SILL
40 GYPSUM BOARD ON PLYWOOD
41 CONCRETE TRIM EDGE
42 2" RIGID INSULATION
43 FOUNDATION DRAINAGE SYSTEM - SEE CIVIL
44 PLASTIC LAMINATE ON PARITICLE BOARD ON PLYWOOD
45 WINDOW SILL
46 R-30 BATT INSULATION
47 REGLET AND COUNTER FLASHING
48 6" METAL STUDS @ 16" O.C.
49 3 - 5/8" METAL STUDS @ 16" O.C.
50 T & G WOOD CEILING
51 HARDWOOD TRIM
52 SUSPENDED GYPSUM BOARD CEILING SYSTEM WITH 2-LAYERS - SEE FIRE PROTECTION SCHEDULE SHEET A11.1
53 1/2" EXPANSION MATERIAL WITH SEALANT
54 RECESSED LIGHT FIXTURE - SEE ELECTRICAL
55 4" x 2'-0" x CONTINOUS RIGID INSULATION (R-18 MIN. TYP.)
56 6" METAL STUD BRACE - DIAGONAL @ 4' - 0" O.C.
57 2" 'Z' CLIPS
58 PREFORMED METAL WALL PANELS
59 PREFORMED METAL ROOF PANELS
60 METAL STUDS - SEE FLOOR PLAN FOR WALL TYPE
61 STEEL GRATING - SEE STRUCTURAL
62 BITUMINOUS DAMPPROOFING
63 LIGHT FIXTURE - SEE ELECTRICAL
64. PERIMETER SECUREMENT - SEE ROOFING SPEC. - TYPICAL

REV	DATE	ACTION	DESCRIPTION	BY	APVD

DEPARTMENT OF HEALTH AND HUMAN SERVICES
OFFICE OF ENGINEERING SERVICES
2201 SIXTH AVENUE SEATTLE, WASHINGTON 98121

PINE RIDGE
COMPREHENSIVE HEALTH CARE FACILITY
PINE RIDGE, SOUTH DAKOTA

DEPARTMENT OF HEALTH & HUMAN SERVICES USA

DRAWING TITLE: WALL SECTIONS

PROJECT NUMBER	SCALE	
D10 - 387	DATE 10.1990	A3.11
DRAWN DM / CHKD AJ	APVD	SHT 53 OF 267

COMMERCIAL BLUEPRINT FORM • 129234

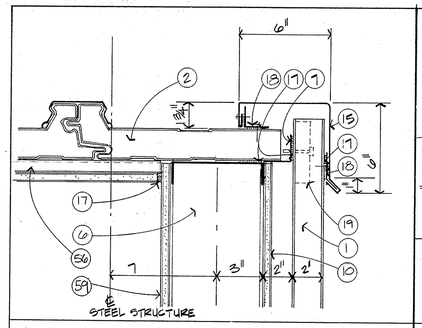

5 METAL ROOF PANEL RAKE 3"

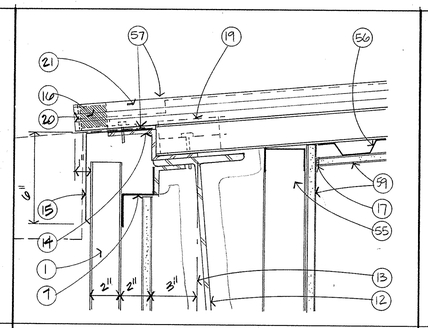

4 MECH. EQUIP. ENCL. LOWER EAVE 3"

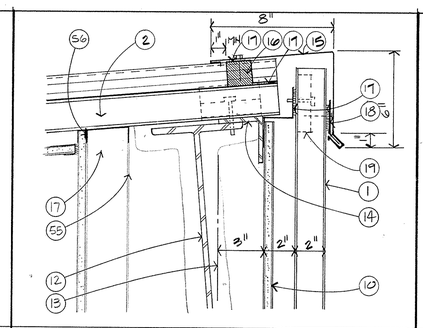

3 MECH. EQUIP. ENCL. UPPER EAVE 3"

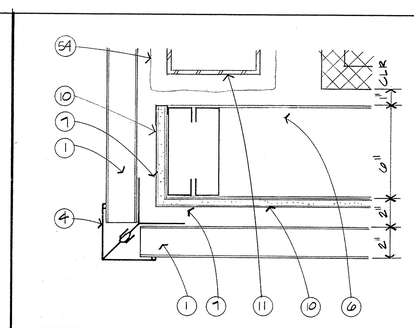

2 MECH. EQUIP. ENCL. CORNER 3"

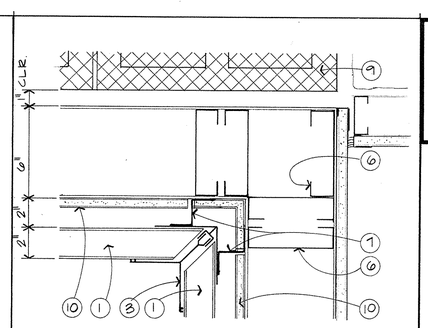

1 MECH. EQUIP. ENCL. CORNER 3"

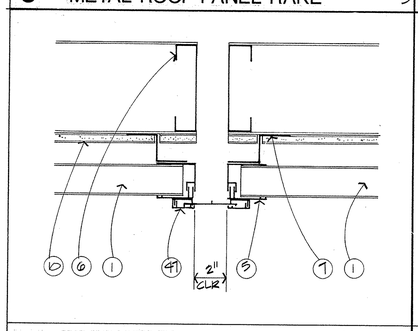

10 EXP. JT. @ METAL SOFFIT PANEL 3"

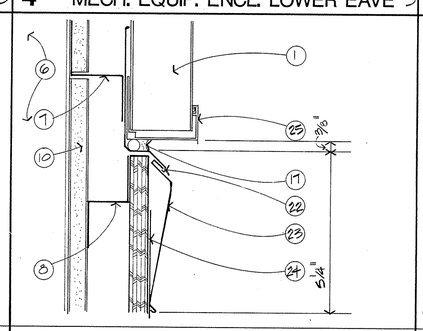

9 ROOF REGLET @ METAL PANEL 6"

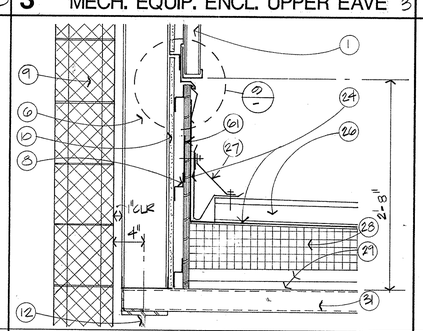

8 ROOF @ MECH. EQUIP. ENCL. 1½"

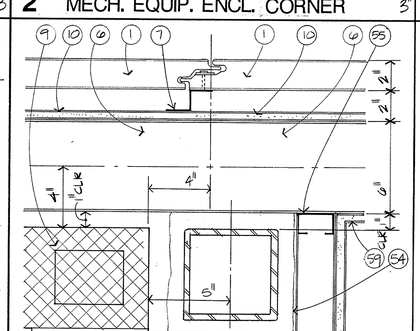

7 MECH. EQUIP. ENCL. 3"

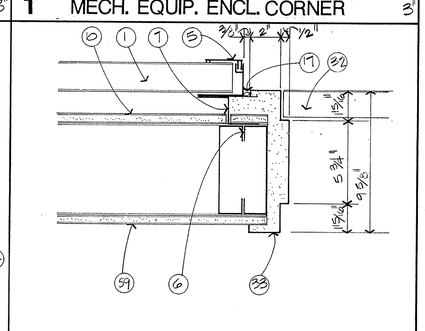

6 METAL PANEL JAMB 3"

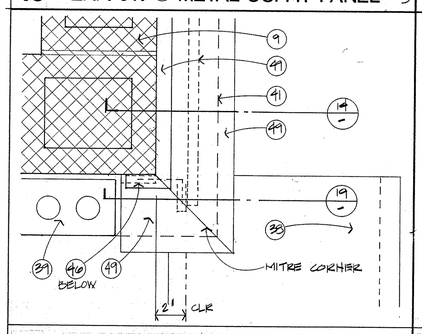

15 E.J. COVER @ WALL/PARAPET 3"

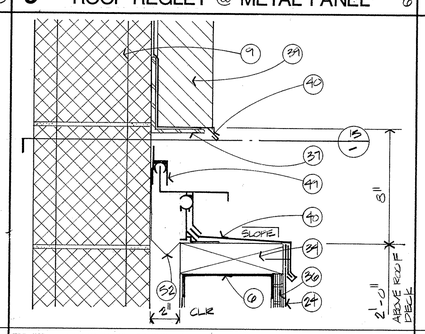

14 EXP. JT. @ PARAPET WALL 3"

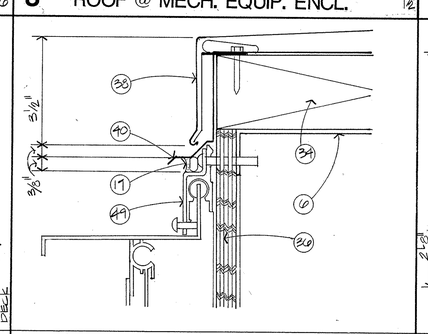

13 FLASHING @ COPING/E.J. COVER 6"

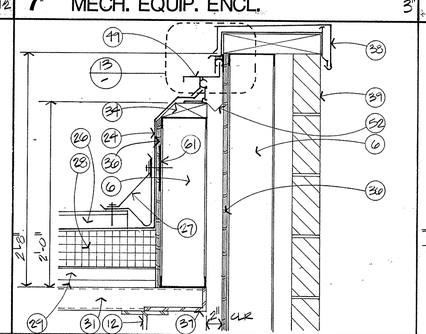

12 EXP. JT. @ PARAPET 1½"

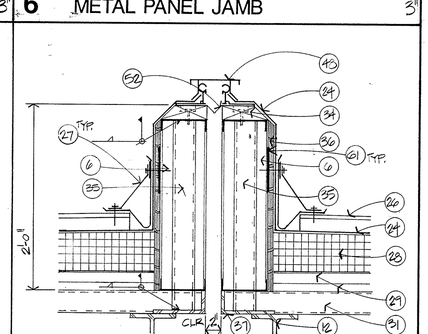

11 EXP. JT. @ ROOF 1½"

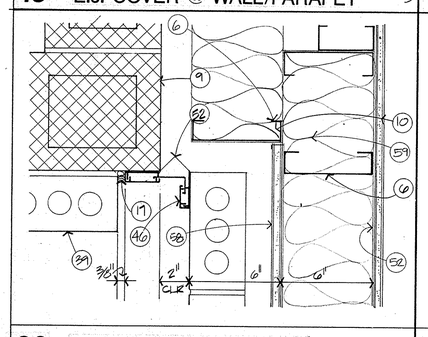

20 EXP. JT. COVER @ WALL 3"

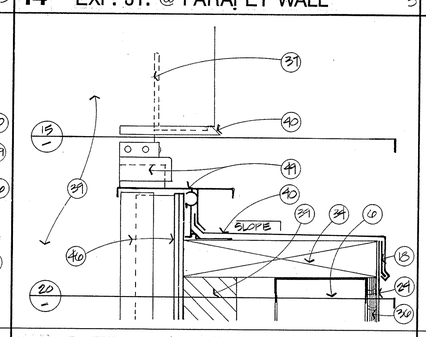

19 E.J. @ PARAPET CORNER 3"

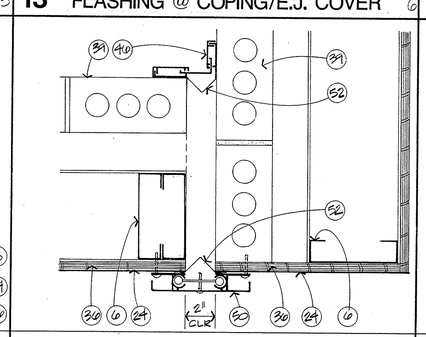

18 EXP. JT. @ PARAPET 3"

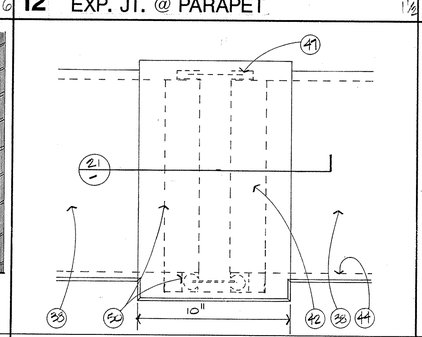

17 EXP. JT. @ PARAPET COPING 3"

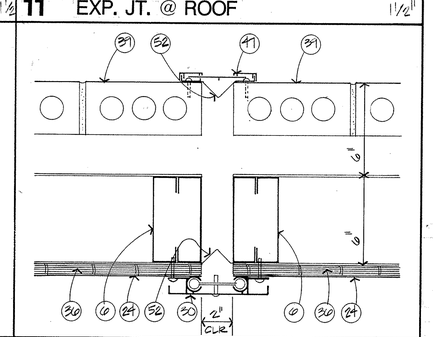

16 EXP. JT. COVER @ WALL 3"

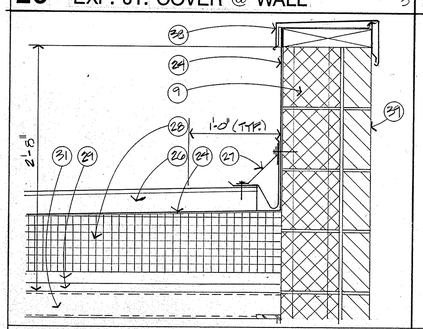

25 ROOF @ CMU WALL 1½"

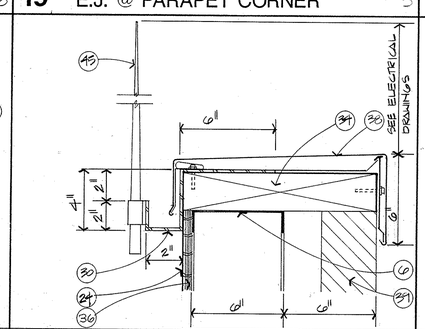

24 PAR. COP./LIGHTNING PROTECT. 3"

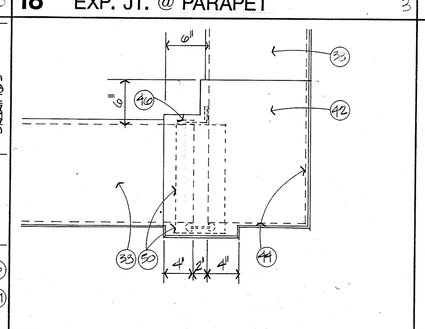

23 COPING @ PARAPET CORNER/E.J. 1½"

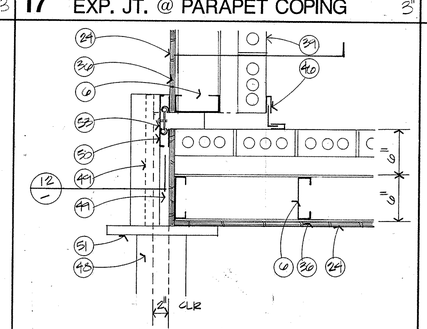

22 EXP. JT @ PARAPET CORNER 1½"

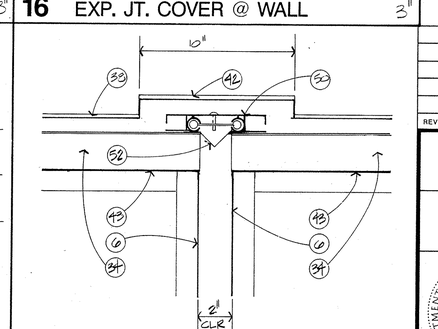

21 EXP. JT. @ PARAPET TOP 3"

COMMERCIAL BLUEPRINT FORM # 129334

Wyatt/Rhodes
architects inc.
ARCHITECTURE
PLANNING

PHOENIX

REGISTERED ARCHITECT

KEY NOTES

1. PREFORMED METAL WALL PANELS
2. PREFORMED METAL ROOF PANELS
3. INSIDE CORNER TRIM
4. OUTSIDE CORNER TRIM
5. PANEL JAMB
6. 6" STRUCTURAL STEEL STUDS @ 16" O.C.
7. 2" "Z" CLIP
8. 1-1/2" "Z" CLIP
9. CONCRETE MASONRY UNITS
10. EXTERIOR GYPSUM WALL BOARD
11. STEEL TUBE - SEE STRUCTURAL
12. STEEL BEAM - SEE STRUCTURAL
13. CENTERLINE OF 6" STUDS BELOW
14. BENT PLATE - SEE STRUCTURAL
15. PRE-FINISHED ALUMINUM TRIM
16. COMPOSITION CLOSER
17. CONTINUOUS SEALANT
18. CONTINUOUS METAL CLEAT
19. ANCHOR CLIP FASTENER
20. METAL CLOSURE
21. SNAP ON CAP
22. ALUMINUM REGLET
23. ALUMINUM COUNTERFLASHING
24. ROOFING MEMBRANE
25. BASE TRIM
26. CONCRETE CLAD INSULATED ROOF BALLAST PANELS
27. PERIMETER SECUREMENT - SEE ROOFING SPEC - TYPICAL
28. TAPERED RIGID INSULATION
29. PERLITE INSULATION (2 LAYERS)
30. 3/16" BENT PLATE
31. METAL ROOF DECK
32. DOOR
33. DOOR JAMB
34. BLOCKING
35. 3" DIAMETER STANDARD STEEL PIPE COLUMN AT 8'-0" O.C. (TYP)
36. 5/8" FIRE RETARDENT TREATED PLYWOOD
37. STEEL ANGLE - SEE STRUCTURAL DRAWINGS
38. ALUMINUM COPING
39. BRICK MASONRY
40. ALUMINUM FLASHING
41. LINE OF BRICK ABOVE
42. CUSTOM ALUMINUM COPING
43. STRUCTURAL STEEL RUNNER TRACK
44. LINE OF WALL BELOW
45. LIGHTING ROD AND BRACKET - SEE ELECTRICAL
46. * EXPANSION JOINT COVER - METALINES 15K
47. * EXPANSION JOINT COVER - METALINES 10K
48. * EXPANSION JOINT COVER - METALINES - FR320
49. * EXPANSION JOINT COVER - METALINES - FR325
50. * EXPANSION JOINT COVER - METALINES - LPW220
51. TRANSITION PIECE (FROM WALL/ROOF TO FLAT ROOF)
52. VAPOR BARRIER
53. CUSTOM TRANSITION FROM WALL COVER TO WALL/ROOF COVER
54. FIBROUS FIREPROOFING
55. 2-1/2" METAL STUDS
56. 7/8" METAL FURRING CHANNELS
57. LINE OF GUTTER - REFER TO DETAIL
58. MOISTURE BARRIER
59. GYPSUM WALLBOARD
60. R-19 BATT INSULATION
61. 6" x CONTINUOUS SHEET METAL BACKING STRAP BEHIND PERIMETER SECUREMENT

* OR EQUAL APPROVED BY CONTRACTING OFFICER.

GENERAL NOTES:

A AT CUSTOM COPING, MITRE AND SOLDER ALL CORNERS AND TRANSITIONS

REV	DATE	ACTION	DESCRIPTION	BY	APVD

DEPARTMENT OF HEALTH AND HUMAN SERVICES
OFFICE OF ENGINEERING SERVICES
2201 SIXTH AVENUE SEATTLE, WASHINGTON 98121

PINE RIDGE
COMPREHENSIVE HEALTH CARE FACILITY
PINE RIDGE, SOUTH DAKOTA

DEPARTMENT OF HEALTH & HUMAN SERVICES USA

DRAWING TITLE
MISCELLANEOUS DETAILS - EXTERIOR

PROJECT NUMBER	SCALE	
D10 - 387	DATE 10-19-90	A8.5
DRAWN A.F. / CHKD AJ	APVD	SHT 103 OF 267