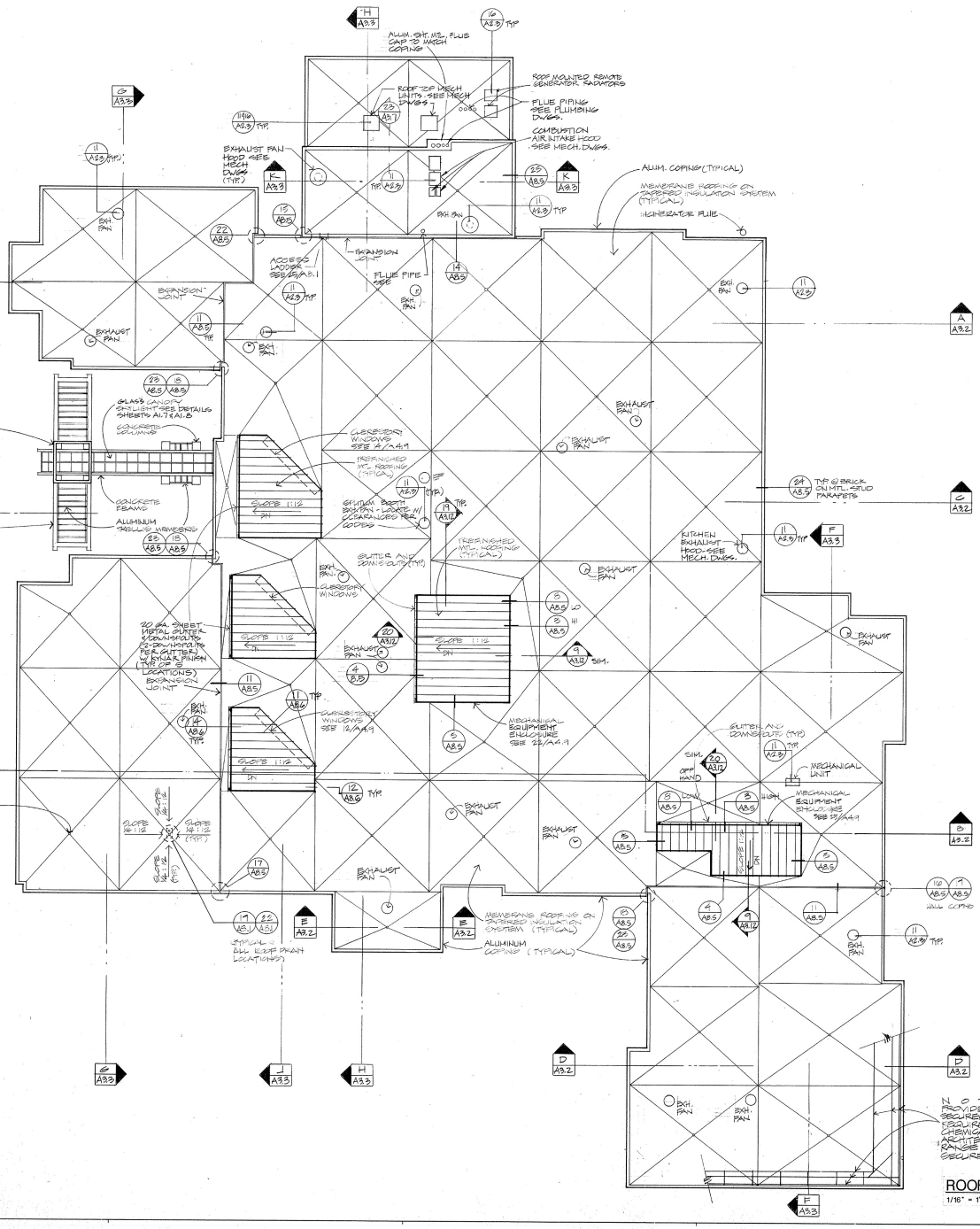

ROOF PLAN

1/16" = 1'-0"

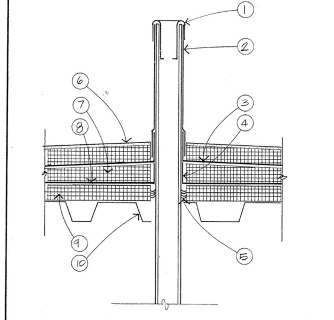

6 PIPE PENETRATION THROUGH ROOF 1½"

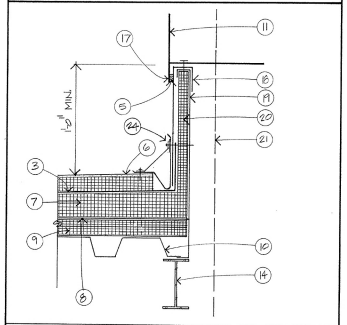

11 MECHANICAL EQUIPMENT CURB 1½"

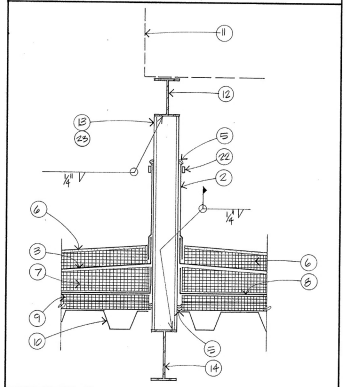

16 MECH. EQUIP. SUPPORT FRAME 1½"

REGISTERED ARCHITECT
REG. NO. 4798
BURKE B. WYATT
SOUTH DAKOTA

Wyatt/Rhodes
architects inc.
ARCHITECTURE
PLANNING
PHOENIX

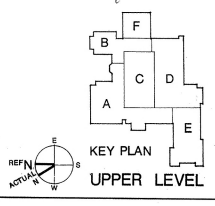

KEY PLAN
UPPER LEVEL

KEY NOTES

1. ROOFING MEMBRANE CAP OVER TOP
2. ROOFING MEMBRANE – UP SIDE
3. ROOFING MEMBRANE
4. FLASH UP VAPOR RETARDER FOR AIR INFILTRATION BARRIER
5. SEALANT
6. T. & G. CONCRETE CLAD INSULATION ROOF PANELS
7. TAPERED INSULATION
8. ASPHALT MEMBRANE VAPOR RETARDER
9. 2 LAYERS PERLITE RIGID INSULATION
10. METAL ROOF DECK
11. ROOF MOUNTED MECHANICAL EQUIPMENT
12. MECHANICAL EQUIPMENT STEEL SUPPORT FRAME - SEE STRUCTURAL
13. 4" O.D. STEEL PIPE MECHANICAL EQUIPMENT SUPPORT FRAME LEG @ 8'-0" O.C. MAX.
14. STEEL SUPPORT STRUCTURE - SEE STRUCTURAL
15. STEEL PIPE
16.
17. FLASH OVER CURB
18. ROOFING MEMBRANE OVER TOP OF CURB
19. PRE-FRABICATED SHEET METAL CURB TYP.
20. 1-1/2" RIGID INSULATION
21. DUCT THROUGH ROOF - SEE MECHANICAL
22. COLLAR CLAMP
23. M.P.E. PIPE PENETRATIONS (EXCEPT VENTS) WHERE OCCUR
24. PERIMETER SECUREMENT COMPRESSION / RETAINER BAR - TYPICAL - SEE SPEC.

NOTE:

VERIFY LOCATIONS OF ALL PIPES, DUCTS, CONDUIT, EQUIPMENT SUPPORT STANDS ETC. THAT PENETRATE OR ARE MOUNTED ON THE ROOF. VERIFY ALL LOCATIONS WITH MECHANICAL, PLUMBING AND ELECTRICAL DRAWINGS AND INSTALL PER DETAILS AND MFGRS PRINTED INSTRUCTIONS AND REQUIREMENTS

REV	DATE	ACTION	DESCRIPTION	BY	APVD

DEPARTMENT OF HEALTH AND HUMAN SERVICES
OFFICE OF ENGINEERING SERVICES
2201 SIXTH AVENUE SEATTLE, WASHINGTON 98121

PINE RIDGE
COMPREHENSIVE HEALTH CARE FACILITY
PINE RIDGE, SOUTH DAKOTA

DEPARTMENT OF HEALTH & HUMAN SERVICES USA

DRAWING TITLE		
ROOF PLAN		
PROJECT NUMBER: D10 - 387	SCALE	
DATE: 7.19.90	**A2.3**	
DRAWN: AJ.DS / CHKD: AJ	APVD	

Overlays					
1	2	3	4	5	6
7	8	9	10	11	12
13	14	15	16	17	18
19	20	21	22	23	24
25	26	27	28	29	30
31	32	33	34	35	36
37	38	39	40	41	42
43	44	45	46	47	48
49	50	51	52	53	54
55	56	57	58	59	60
61	62	63	64	65	66
67	68	69	70	71	72
73	74	75	76	77	78
79	80	81	82	83	84
85	86	87	88	89	90
91	92	93	94	95	96
97	98	99	100	101	
103	104	105	106	107	108
109	110	111	112	113	114
115	116	117	118	119	120
121	122	123	124	125	126
127	128	129	130	131	132
133	134	135	136	137	138
139	140	141	142	143	144
145	146	147	148	149	150
151	152	153	154	155	156
157	158	159	160	161	162
163	164	165	166	167	168

COMMERCIAL BLUEPRINT FORM # 129224