Statement of Work

162d Wing

P-26 Firetruck Water tank replacement

Tucson, Arizona Air National Guard has a need for installation of a new 4000-gallon plastic water tank onto an existing truck chassis provided by the 162d Wing. The tank and installation shall meet the following specifications:

The purchase and installation of a Pro-Poly Tank Item #18360 *OR EQUAL ITEM. (See schematics for details)*

All Labor to remove and dispose of old tank and to install new tank and connect any remaining connections and components shall be included in the total price.

Installation- Shall provide for complete assembly of tank onto chassis, incorporating the existing pumping and water systems. All system plumbing hoses, pipe fittings, mounting kit, mud flaps and lighting shall be installed according to the manufacturer's guidelines. All electrical wiring shall be enclosed in the protective loom.

The tank has eyebolts installed in the lifting lugs for use in installation of the tank. Lifting STRAIGHT UP on the eyebolts is required. A spreader bar should be used when installing tanks.

Tank stops mounted center wall in all directions is acceptable as long as the tank can NOT move in any direction more than 1/8".

Where aluminum or steel tubing and channel sub frames are incorporated in the truck body structure, the use of vertical corner angles having a minimum dimension of 4" x 4" x ¼" thick x 6" to 12" high are permitted for cradling the tank, unless otherwise specified.

Restraints holding the tank down are required to minimize movement during vehicle travel and should be isolated from the top of the tank. The restraints may be constructed of 3" x 3" x ¼" steel or aluminum and should be at least 12" in length.

A gap of ¼" should be left between picture frame edges or vertical corner angles and the tank body.

It is required that the plastic tank has sufficient room on all sides and top to allow it to move without restriction.

All tank connections must be of flexible design. The tank plumbing components, including valves, pipes, and other connections, must be separately supported by independent means so that the tank fitting is not stressed. Installing valves, pipes or connections should be done using Teflon tape with several layers.

All contact surfaces between the tank body and truck frame or supports must be isolated with a 1/4" rubber (60 durometer) blanket or rubber strips. This includes top edge hold downs and vertical corner supports.

Spring Loaded Tank Mounts: grade 8 bolts, and one mount per 1,000 gallons

Tank Painted Red to match current truck

Tank Front Sprayed with Red Bed liner Material

Physical Security

The contractor shall safeguard all Government property provided for contractor use. At the close of each work period, Government facilities, equipment and materials shall be secured.

Government Furnished Property, (GFP)

The Government will provide the property listed below solely for the purpose of performance under this contract:

1. P-26 Firetruck NSN: 4210015908179

Period of Performance

This is an urgent and compelling need. After the award and upon receipt of the truck the vendor shall have 90 days to complete all work.

Delivery of chassis

If the contractor's place of performance is within 50 miles of 1650 E. Perimeter Way

Tucson, AZ 85706-6020, the government will *coordinate* delivery and pick up. **If the contractor's place of performance exceeds 50 miles, pick up and delivery must be included in the cost.**

Vehicle information is provided below:

Chassis Specifications-Chassis is a 2012 International, VIN 1HTWGAZT8CJ639219, Tandem axle, 29,756 lbs. GVWR.

Tank Size: 4,000 USG

DLA SUPPLY CENTER PA
ESTIMATED GALLONS OF WATER 4,013

KME TANK ASSEMBLY
UPF TANK DRAWING 770-2310

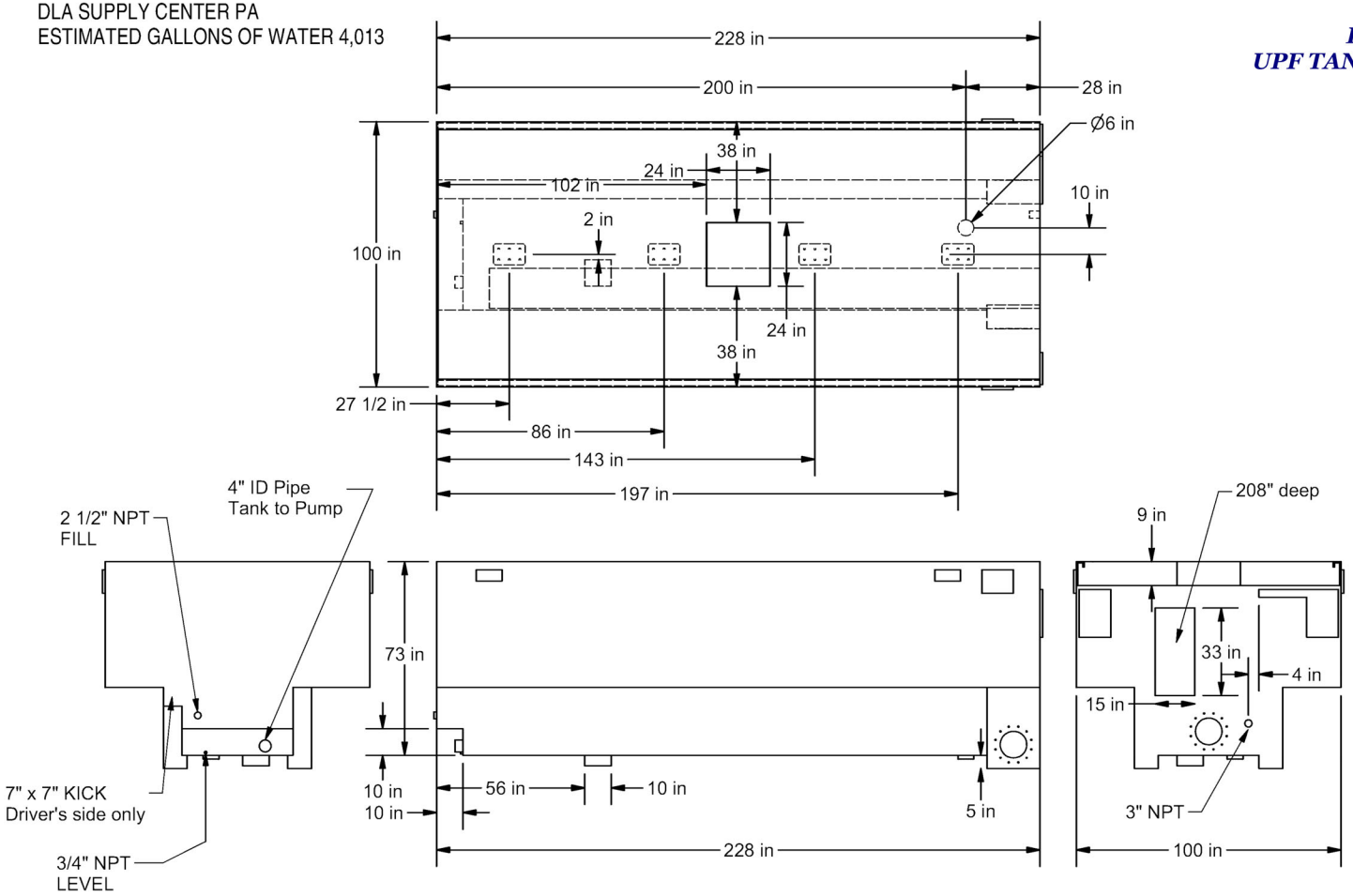

TOLERANCE UNLESS SPECIFIED	DRAWN BY	TITLE		
ONE PLACE DECIMAL ± .03 TWO PLACE DECIMAL ± .015 THREE PLACE DECIMAL ± .005 FRACTIONS ± 1/32 ANGLES ± 1°	REMOVE ALL BURRS AND SHARP EDGES DO NOT CHANGE DRAWINGS MANUALLY	CRK		KME Fire Apparatus
	DATE DRAWN	REVISION	DRAWING NUMBER	SHEET
	5/4/2010		TANK 8036-1	1 OF 6

Figure 45

REAR VIEW

KME TANK ASSEMBLY
UPF TANK DRAWING 770-2310

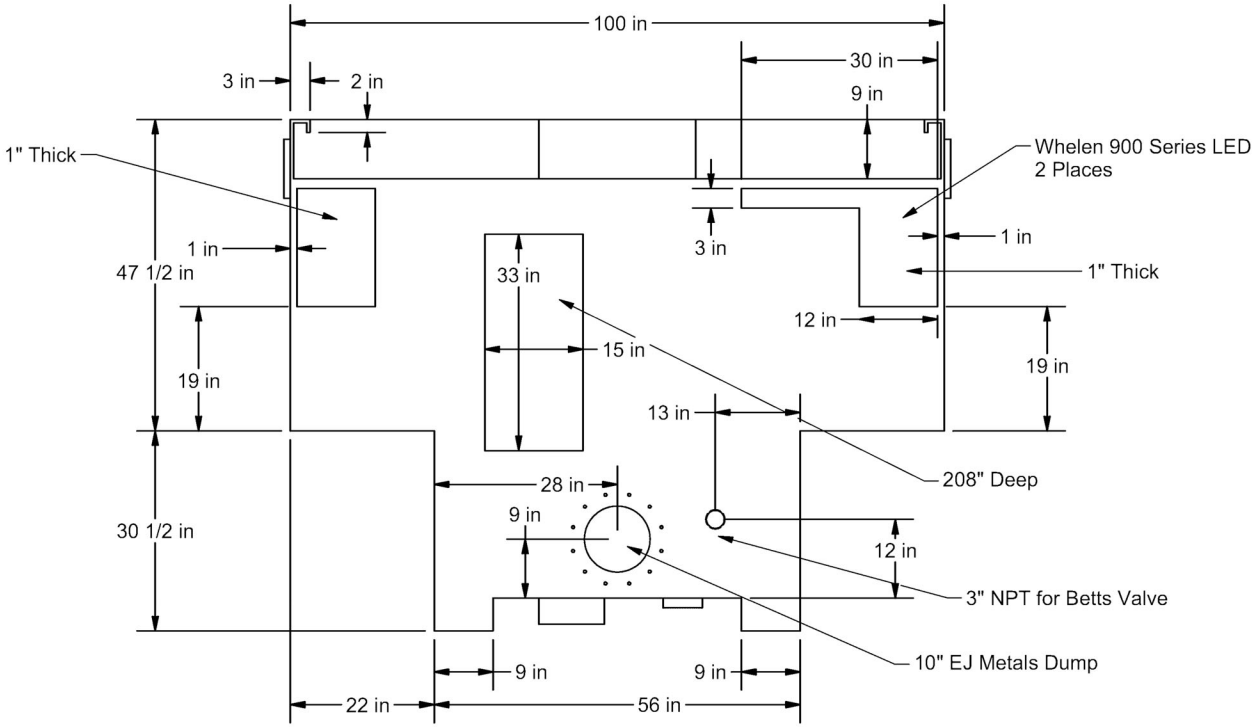

TOLERANCE UNLESS SPECIFIED	DRAWN BY	TITLE		
ONE PLACE DECIMAL ± .03 TWO PLACE DECIMAL ± .015 THREE PLACE DECIMAL ± .005 FRACTIONS ± 1/32 ANGLES ± 1°	REMOVE ALL BURRS AND SHARP EDGES DO NOT CHANGE DRAWINGS MANUALLY	CRK		KME Fire Apparatus
	DATE DRAWN	REVISION	DRAWING NUMBER	SHEET
	5/4/2010		TANK 8036-1	2 OF 6

Figure 45A

Front View

KME TANK ASSEMBLY
UPF TANK DRAWING 770-2310

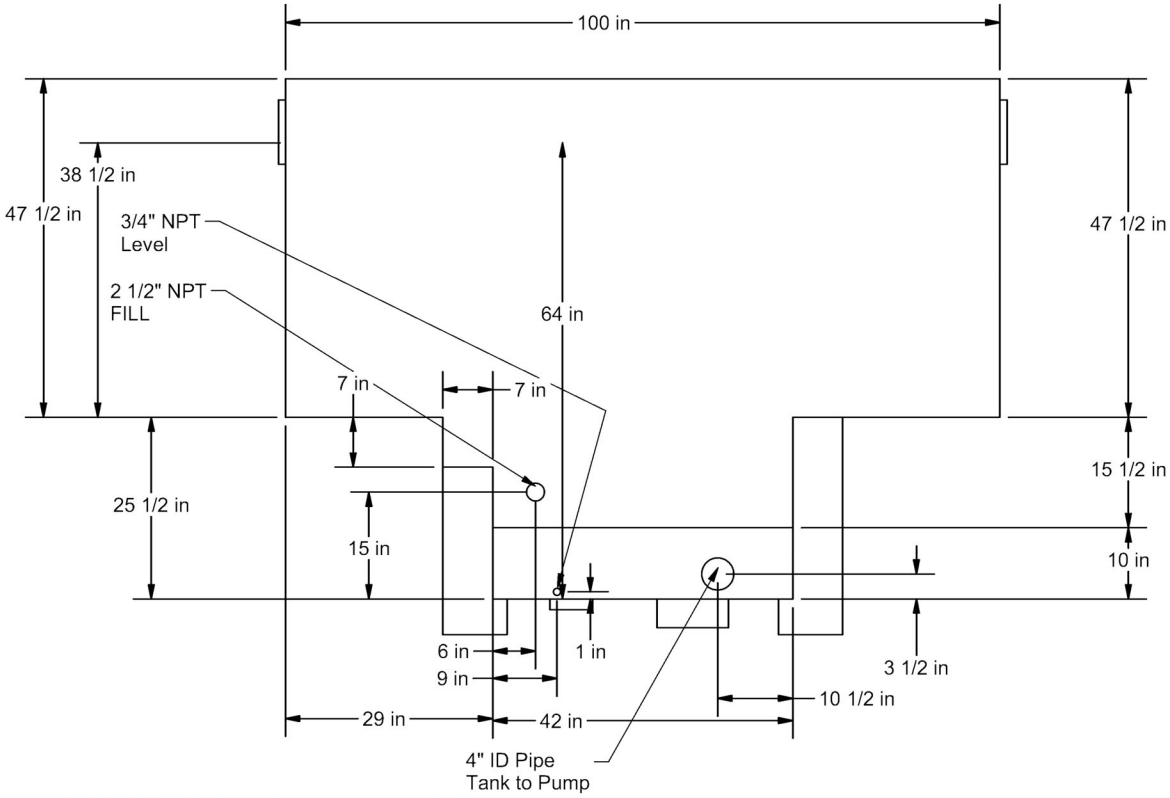

TOLERANCE UNLESS SPECIFIED		DRAWN BY	TITLE			
ONE PLACE DECIMAL ± .03 TWO PLACE DECIMAL ± .015 THREE PLACE DECIMAL ± .005 FRACTIONS ± 1/32 ANGLES ± 1°	REMOVE ALL BURRS AND SHARP EDGES DO NOT CHANGE DRAWINGS MANUALLY	CRK				KME
		DATE DRAWN	REVISION	DRAWING NUMBER	SHEET	Fire Apparatus
		5/4/2010		TANK 8036-1	3 OF 6	

Figure 45B

KME TANK ASSEMBLY
DRIVER SIDE TANK VIEW

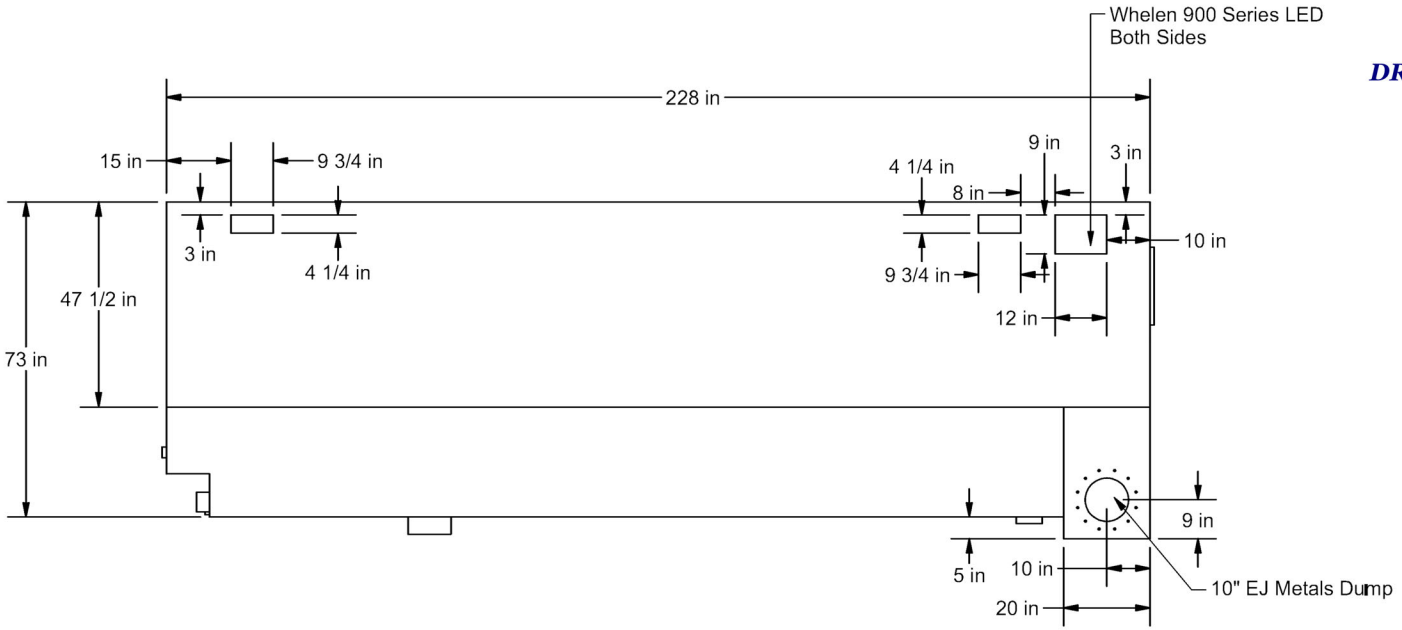

TOLERANCE UNLESS SPECIFIED		DRAWN BY	TITLE			
ONE PLACE DECIMAL ± .03 TWO PLACE DECIMAL ± .015 THREE PLACE DECIMAL ± .005 FRACTIONS ± 1/32 ANGLES ± 1°	REMOVE ALL BURRS AND SHARP EDGES DO NOT CHANGE DRAWINGS MANUALLY	CRK				KME Fire Apparatus
		DATE DRAWN	REVISION	DRAWING NUMBER	SHEET	
		5/4/2010		TANK 8036-1	4 OF 6	

Figure 45C

KME BODY/TANK ENCLOSURE

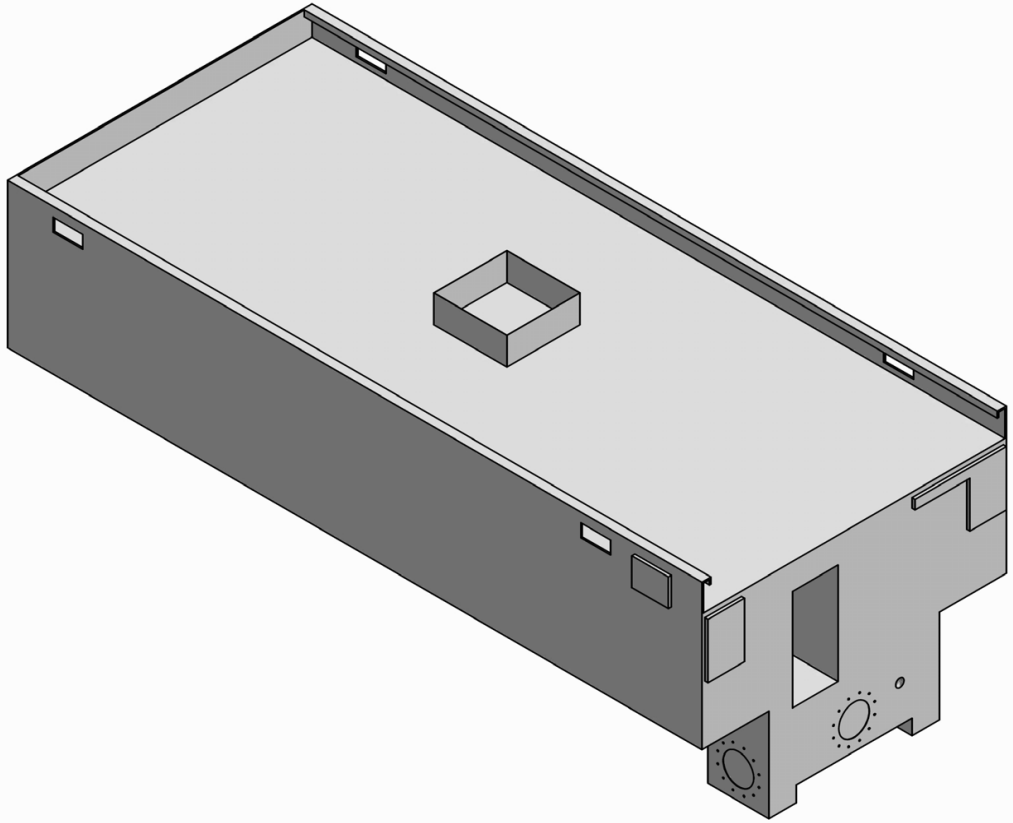

TOLERANCE UNLESS SPECIFIED		DRAWN BY	TITLE			
ONE PLACE DECIMAL ± .03 TWO PLACE DECIMAL ± .015 THREE PLACE DECIMAL ± .005 FRACTIONS ± 1/32 ANGLES ± 1°	REMOVE ALL BURRS AND SHARP EDGES DO NOT CHANGE DRAWINGS MANUALLY	CRK				KME Fire Apparatus
		DATE DRAWN 5/4/2010	REVISION	DRAWING NUMBER TANK 8036-1	SHEET 5 OF 6	

Figure 45D

KME BODY/TANK ENCLOSURE

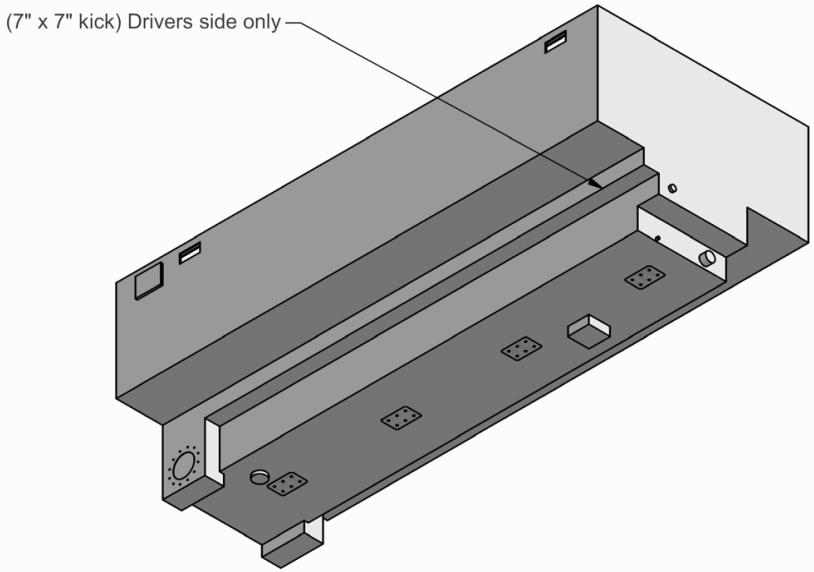

TOLERANCE UNLESS SPECIFIED		DRAWN BY	TITLE			
ONE PLACE DECIMAL ± .03 TWO PLACE DECIMAL ± .015 THREE PLACE DECIMAL ± .005 FRACTIONS ± 1/32 ANGLES ± 1°	REMOVE ALL BURRS AND SHARP EDGES DO NOT CHANGE DRAWINGS MANUALLY	CRK				KME Fire Apparatus
		DATE DRAWN	REVISION	DRAWING NUMBER	SHEET	
		5/4/2010		TANK 8036-1	6 OF 6	

Figure 45E

776
AF12L00020

776

776
776

776