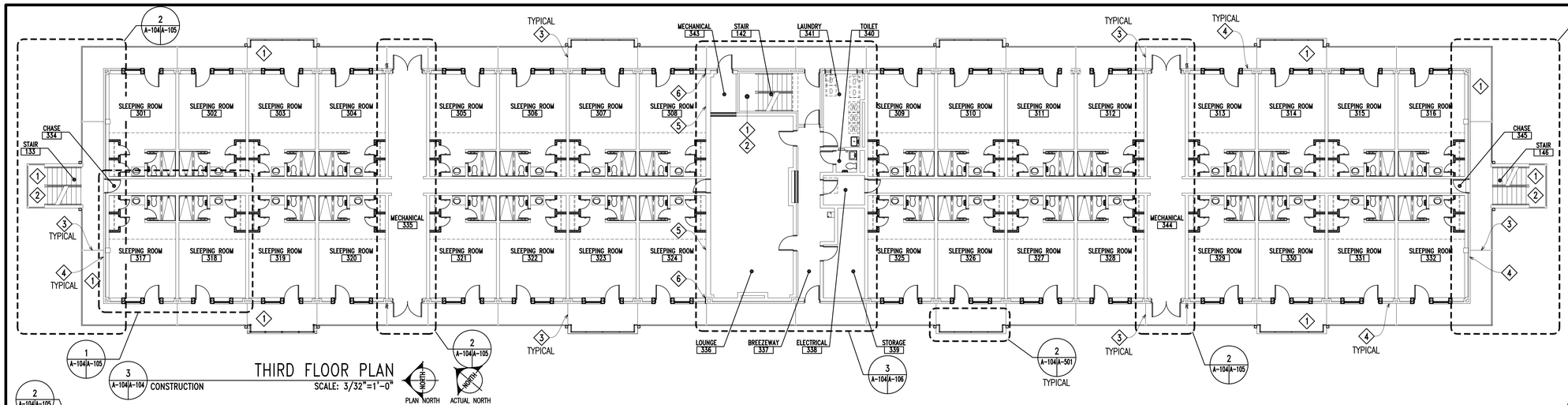

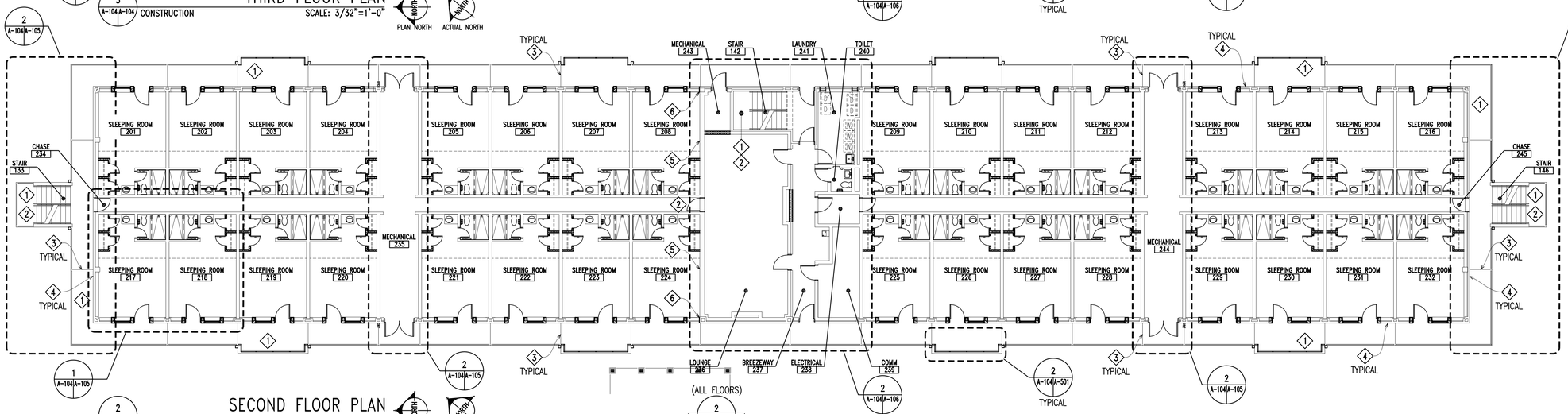

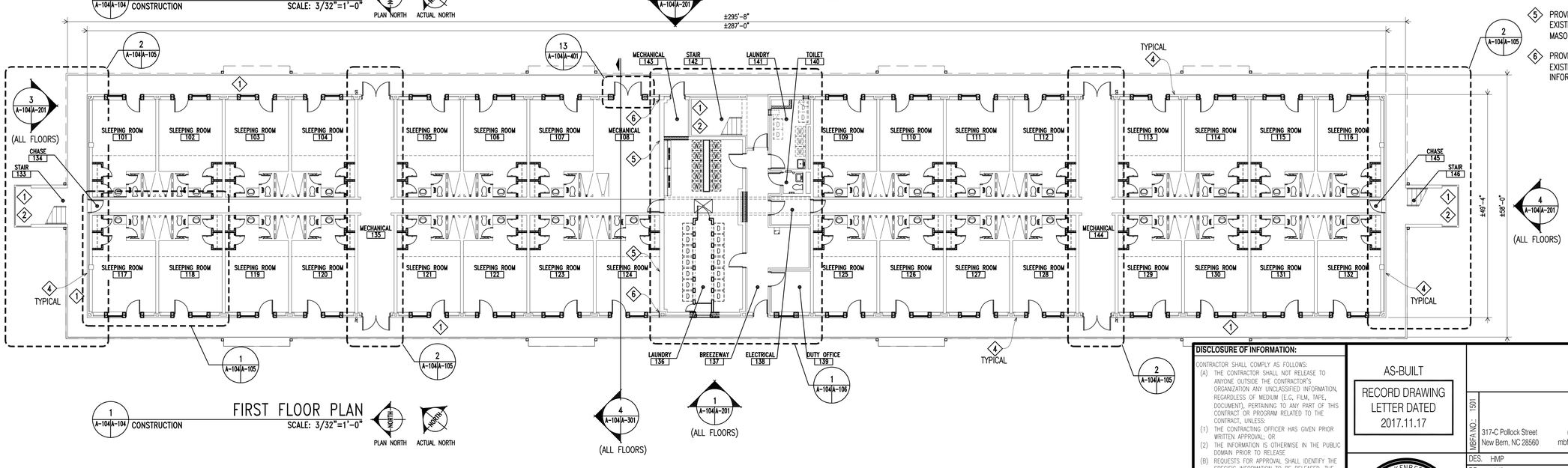

GENERAL NOTES

1. SEE REFLECTED CEILING PLAN A-107 AND A-108 FOR AREAS TO RECEIVE NEW CEILING FINISHES, MATERIALS, HEIGHTS, ETC. SEE FINISH SCHEDULE SHEET A-604 FOR ALL MATERIAL AND COLOR SELECTIONS.

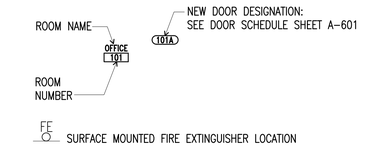

2. SEE ENLARGED CONSTRUCTION PLANS AS DENOTED FOR SPECIFIC CONSTRUCTION SCOPE OF WORK AT INDICATED AREAS.
3. ASBESTOS MATERIAL AND LEAD-BASED PAINT TESTING HAS BEEN PERFORMED ON EXISTING AREAS OF WORK. SEE THE SPECIFICATION FOR ASBESTOS MATERIAL AND LEAD-BASED PAINT REPORT RESULTS. CONTRACTOR SHALL BE RESPONSIBLE FOR THE APPROPRIATE STANDARD OF CARE REGARDING THE HANDLING OF ANY MATERIALS FOUND TO BE HAZARDOUS AND THE PROTECTION OF PERSONS FROM EXPOSURE.
4. ALL MATERIALS ARE TO BE CONSIDERED NEW UNLESS SPECIFICALLY REFERRED TO AS "EXISTING".
5. SEE LS-001 LIFE SAFETY CODE COMPLIANCE SUMMARY AND LS-101 LIFE SAFETY PLAN FOR LOCATIONS AND HOURLY RATINGS OF FIRE RATED WALLS.
6. WHERE PIPES, CONDUITS, DUCTS OR OTHER UTILITIES ARE REMOVED AND NOT REPLACED, PROVIDE MATERIALS TO FILL THE OPENING(S) WHICH ARE THE SAME AS ADJACENT CONSTRUCTION. SEE FIRE PROTECTION DRAWINGS FOR FIRE-RATED CONSTRUCTION.
7. SEE SHEET A-501 FOR INFORMATION ABOUT NEW ALUMINUM GUARDRAILS.

KEYED CONSTRUCTION NOTES / APPLY TO THIS SHEET ONLY

1. POWERWASH ALL EXISTING CONCRETE WALKING SURFACES, ENTIRE BUILDING, INCLUDING STAIR RISERS AND TREADS, AND PREPARE SURFACES FOR SEALER, STANDARD RESINOUS FLOORING WHERE INDICATED, AND/OR RETROFIT STAIR TREAD INSTALLATION.
2. PROVIDE RETROFIT STAIR TREAD INSTALLATION AT EACH STAIR NOSING/TREAD, SEE DETAIL 9/A-403.
3. PROVIDE BACKER ROD AND SEALANT AT JOINTS LOCATED BETWEEN THE EXISTING CONCRETE PLANKS, ENTIRE BUILDING PERIMETER. SEE 5/A-404 FOR ADDITIONAL INFORMATION.
4. PROVIDE BACKER ROD AND SEALANT AT JOINT LOCATED AT EXISTING CONCRETE SLAB OR CONCRETE PLANK AND EXISTING BRICK MASONRY WALL, ENTIRE BUILDING PERIMETER. SEE 7/A-404 FOR ADDITIONAL INFORMATION.
5. PROVIDE BACKER ROD AND SEALANT AT BUILDING EXPANSION JOINT LOCATED AT EXISTING CONCRETE SLAB OR CONCRETE PLANK AND INTERIOR CONCRETE MASONRY WALL. SEE 9/A-402 FOR ADDITIONAL INFORMATION.
6. PROVIDE BACKER ROD AND SEALANT AT BUILDING EXPANSION JOINT LOCATED AT EXISTING INTERIOR CONCRETE MASONRY WALLS. SEE 3/A-404 FOR ADDITIONAL INFORMATION.

GRAPHIC SCALE: 3/32"=1'-0"
8' 0 8' 16' 24'

DISCLOSURE OF INFORMATION:

CONTRACTOR SHALL COMPLY AS FOLLOWS:
(A) THE CONTRACTOR SHALL NOT RELEASE TO ANYONE OUTSIDE THE CONTRACTOR'S ORGANIZATION ANY UNCLASSIFIED INFORMATION, REGARDLESS OF MEDIUM (E.G. FILM, TAPE, DOCUMENT), PERTAINING TO ANY PART OF THIS CONTRACT OR PROGRAM RELATED TO THE CONTRACT, UNLESS:
(1) THE CONTRACTING OFFICER HAS GIVEN PRIOR WRITTEN APPROVAL; OR
(2) THE INFORMATION IS OTHERWISE IN THE PUBLIC DOMAIN PRIOR TO RELEASE
(B) REQUESTS FOR APPROVAL SHALL IDENTIFY THE SPECIFIC INFORMATION TO BE RELEASED, THE MEDIUM TO BE USED, AND THE PURPOSE FOR THE RELEASE. THE CONTRACTOR SHALL SUBMIT ITS REQUEST TO THE CONTRACTING OFFICER AT LEAST 45 DAYS BEFORE THE PROPOSED DATE FOR RELEASE.
(C) THE CONTRACTOR AGREES TO INCLUDE A SIMILAR REQUIREMENT IN EACH SUBCONTRACT UNDER THIS CONTRACT. SUBCONTRACTORS SHALL SUBMIT REQUESTS FOR AUTHORIZATION TO RELEASE THROUGH THE PRIME CONTRACTOR TO THE CONTRACTING OFFICER.

AS-BUILT
RECORD DRAWING
LETTER DATED
2017.11.17

SANDRINE BELA NGOA FAULKENBERRY ARCHITECTS, P.A. CERTIFICATE OF AUTHORIZATION CERT. NO. 679 NORTH CAROLINA New Bern, NC

A-104

MBFA NO.: 1501
317-C Pollock Street (252) 637-6373
New Bern, NC 28560 mbfarchitects.com

DEPARTMENT OF THE NAVY NAVAL FACILITIES ENGINEERING COMMAND
MARINE CORPS BASE
CAMP LEJEUNE, NORTH CAROLINA

MAJOR INT/EXT REPAIRS
TO BEQ HP295

COMPREHENSIVE FLOOR PLANS: CONSTRUCTION

DES.	HMP
DR.	HMP
CHK.	RTB
SUBMITTED BY:	
DESIGN DIR.	THOMAS BURTON, PE
APPROVED: PWO OR OICC	DATE
SATISFACTORY TO:	DATE

SIZE	CODE IDENT NO.	NAVFAC DRAWING NO.
F	80091	60016764
		CONST. CONTR. NO. N40085-14-B-0168

SCALE: AS NOTED | SPEC. 05-14-0168 | SHEET 08 OF 101

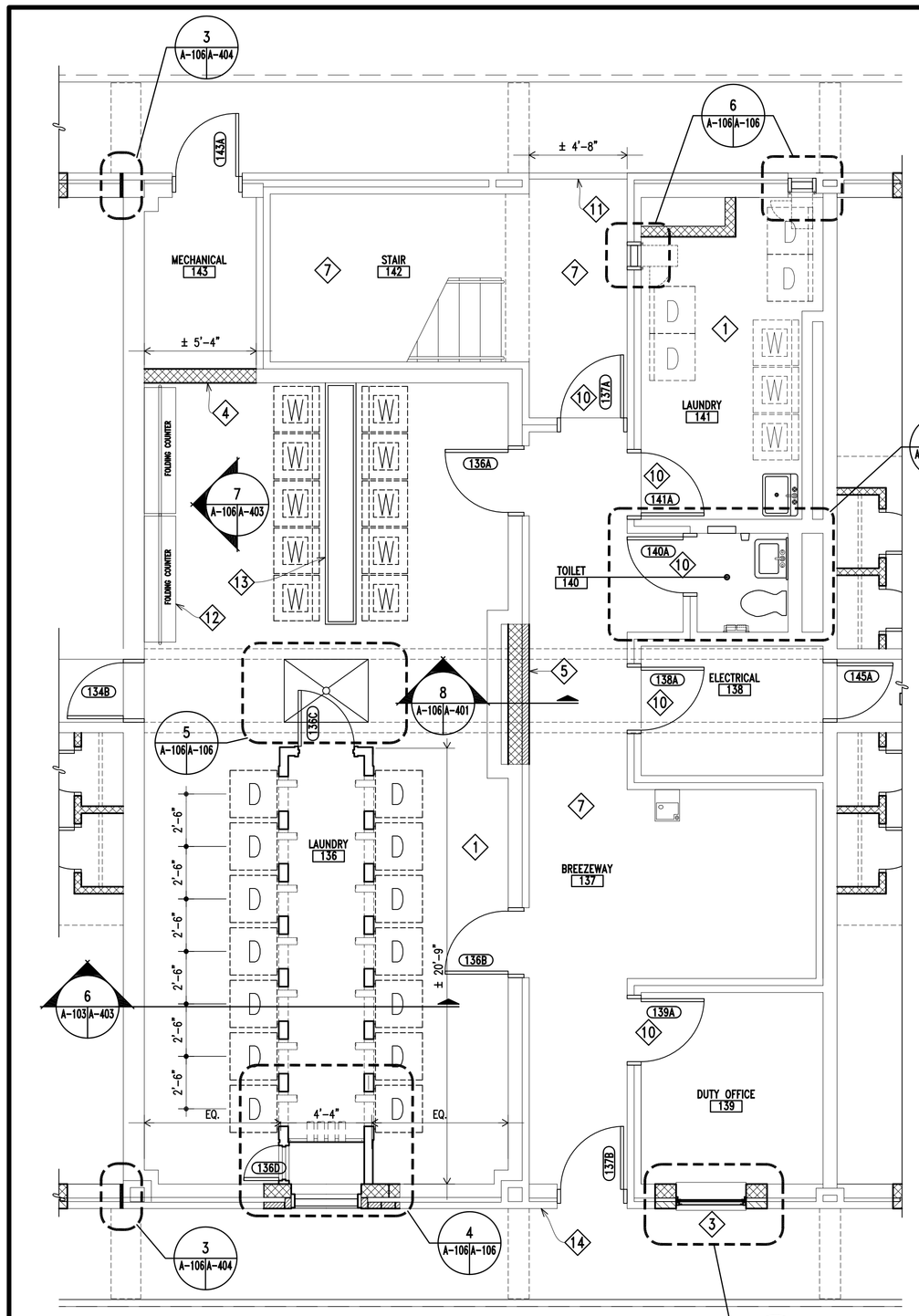

1 A-104/A-106 1ST FLOOR CONSTRUCTION
CENTRAL CORE Scale: 1/4" = 1'-0"

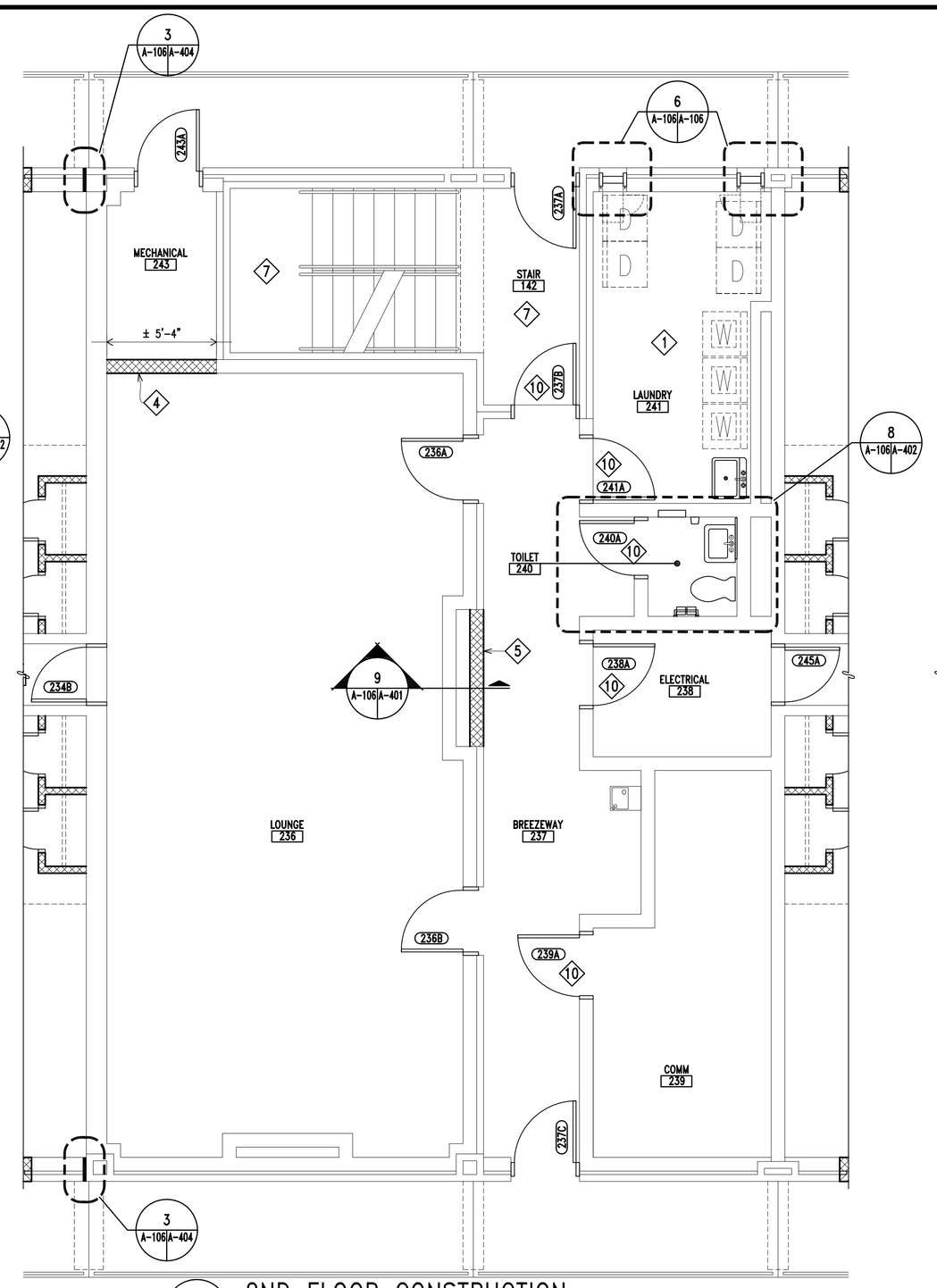

2 A-104/A-106 2ND FLOOR CONSTRUCTION
CENTRAL CORE Scale: 1/4" = 1'-0"

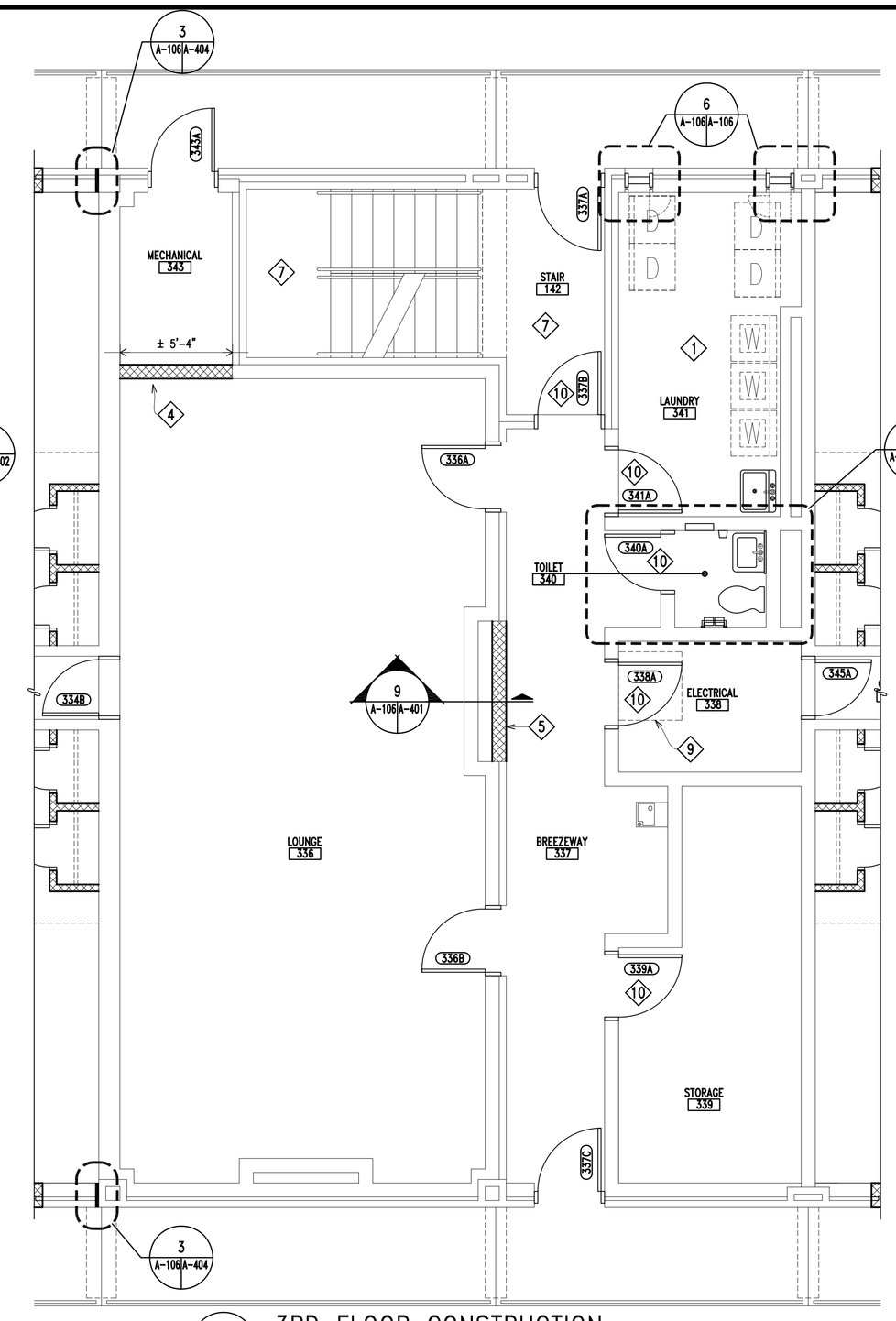

3 A-104/A-106 3RD FLOOR CONSTRUCTION
CENTRAL CORE Scale: 1/4" = 1'-0"

GENERAL NOTES

1. PROVIDE NEW FINISHES FOR ALL SPACES AS DESCRIBED IN THE ROOM FINISH SCHEDULE SHEET A–604.
2. SEE COMPREHENSIVE CONSTRUCTION FLOOR PLANS SHEET A–102 FOR ALL ROOM NAMES.
3. ALL DOORS THAT ARE DESIGNATED A DOOR NUMBER ARE DOORS TO BE REPLACED. SEE DOOR SCHEDULE SHEET A–601 FOR SPECIFIC INFORMATION, INCLUDING IF A NEW FRAME IS TO BE INSTALLED.
4. SEE LS–001 LIFE SAFETY CODE COMPLIANCE SUMMARY AND LS–101 LIFE SAFETY PLAN FOR LOCATIONS AND HOURLY RATINGS OF FIRE RATED WALLS AND LOCATIONS OF NEW FIRE EXTINGUISHERS.
5. FOR ALL BATHROOMS, SEE ENLARGED PLANS AND ELEVATIONS SHEET A–402.

KEYED CONSTRUCTION NOTES

APPLY TO THIS SHEET ONLY

1. WASHERS AND DRYERS ARE NOT IN CONTRACT.
2. PROVIDE NEW CONCRETE MASONRY AND BRICK MASONRY TO FORM FINISHED JAMBS AT NEW LOUVER OPENINGS. PROVIDE NEW LOUVERS IN NEW MASONRY OPENINGS. SEE MECHANICAL DRAWINGS FOR ADDITIONAL INFORMATION.
3. PROVIDE 8" CONCRETE AND 4" BRICK MASONRY INFILL CONSTRUCTION WHERE EXISTING CONSTRUCTION HAS BEEN REMOVED.
4. PROVIDE 8" CONCRETE MASONRY WALL, INFILL WHERE EXISTING DOOR AND FRAME HAVE BEEN REMOVED. INFILL UP TO THE EXISTING MASONRY LINTEL AT 6'–8" A.F.F. x THE WIDTH OF THE PREVIOUS OPENING.
5. PROVIDE CONCRETE MASONRY AND/OR CONCRETE AND BRICK MASONRY INFILL WHERE EXISTING PLYWOOD PANEL (FORMER MAILBOX LOCATION) HAS BEEN REMOVED.
6. PROVIDE CONCRETE SLAB INFILL, SLOPED TO DRAIN, WHERE EXISTING SLAB HAS BEEN REMOVED.
7. SCRUB AND RINSE, BY POWERWASHING, ALL EXISTING INTERIOR BRICK MASONRY WITH BIODEGRADABLE CLEANER TO REMOVE BIOLOGICAL DEPOSITS AND DIRT.
8. PROVIDE CLOTHES FOLDING COUNTER.
9. PROVIDE NEW ATTIC ACCESS HATCH, SEE DETAIL 3/A–109. COORDINATE INSTALLATION BEFORE ENCLOSING WITH NEW ROOF.
10. PROVIDE NEW 4" BRICK AND 4" CONCRETE MASONRY OR 8" CONCRETE MASONRY ABOVE DOOR TO REPLACE REMOVED MASONRY FROM DOOR DEMOLITION. MATCH NEW BRICK TO EXISTING.
11. PROVIDE ALUMINUM THRESHOLD THAT MEETS SPECIFICATIONS FULL WITH OF OPENING.
12. PROVIDE LAUNDRY FOLDING TABLE.
13. PROVIDE PREFABRICATED WASHING MACHINE OUTLET CENTER FOR (10) WASHING MACHINES – SEE PLUMBING AND ELECTRICAL DRAWINGS FOR ADDITIONAL INFORMATION.
14. PROVIDE KNOX BOX AT THIS LOCATION.

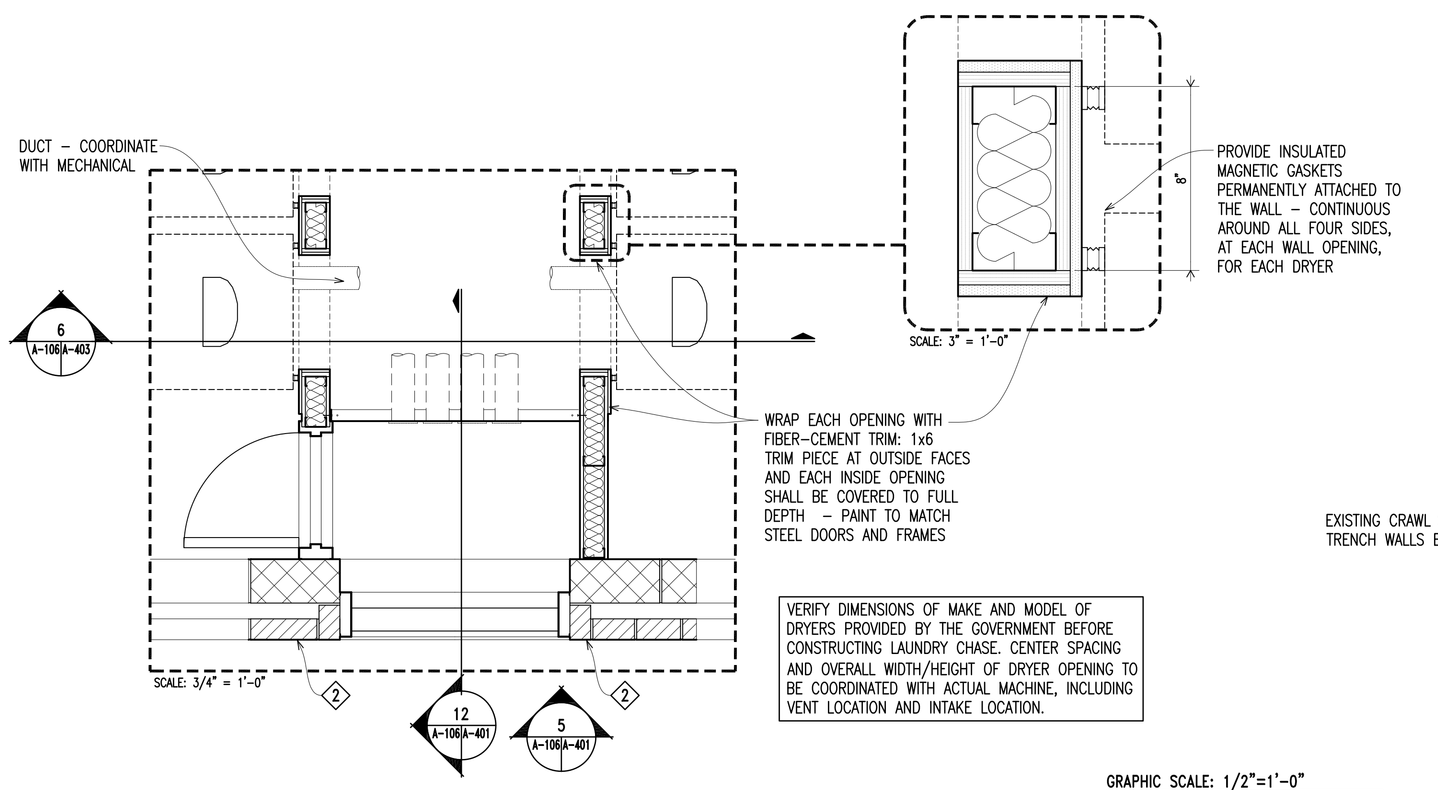

VERIFY DIMENSIONS OF MAKE AND MODEL OF DRYERS PROVIDED BY THE GOVERNMENT BEFORE CONSTRUCTING LAUNDRY CHASE. CENTER SPACING AND OVERALL WIDTH/HEIGHT OF DRYER OPENING TO BE COORDINATED WITH ACTUAL MACHINE, INCLUDING VENT LOCATION AND INTAKE LOCATION.

4 A-105/A-105 1ST FLOOR CONSTRUCTION
LAUNDRY CHASE Scale: 3/4" = 1'-0"

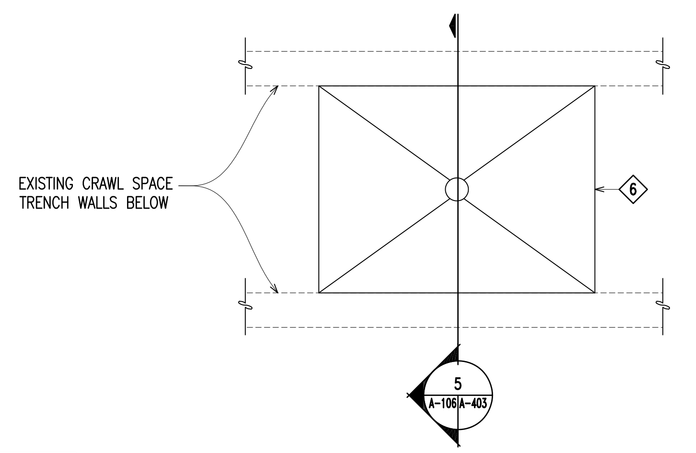

5 A-105/A-105 1ST FLOOR CONSTRUCTION
LAUNDRY ROOM Scale: 3/4" = 1'-0"

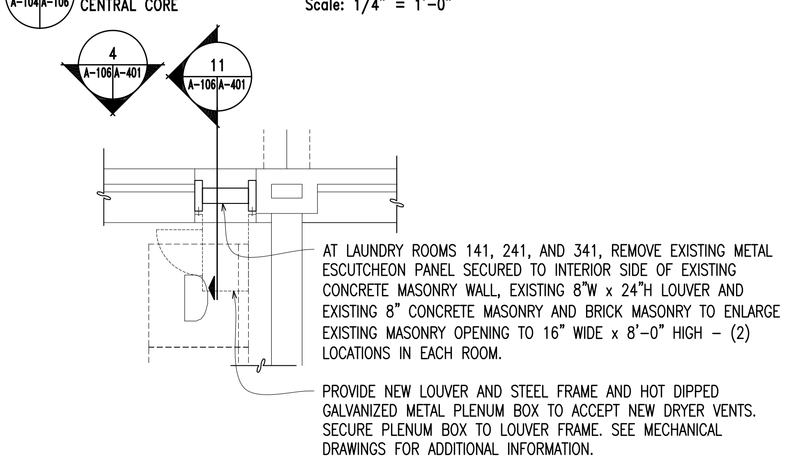

6 A-106/A-106 LAUNDRY ROOM VENT
Scale: 1/2" = 1'-0"

GRAPHIC SCALE: 1/4"=1'-0"
GRAPHIC SCALE: 1/2"=1'-0"
GRAPHIC SCALE: 3/4"=1'-0"

DISCLOSURE OF INFORMATION:

CONTRACTOR SHALL COMPLY AS FOLLOWS:
(A) THE CONTRACTOR SHALL NOT RELEASE TO ANYONE OUTSIDE THE CONTRACTOR'S ORGANIZATION ANY UNCLASSIFIED INFORMATION, REGARDLESS OF MEDIUM (E.G. FILM, TAPE, DOCUMENT), PERTAINING TO ANY PART OF THIS CONTRACT OR PROGRAM RELATED TO THE CONTRACT, UNLESS:
(1) THE CONTRACTING OFFICER HAS GIVEN PRIOR WRITTEN APPROVAL; OR
(2) THE INFORMATION IS OTHERWISE IN THE PUBLIC DOMAIN PRIOR TO RELEASE
(B) REQUESTS FOR APPROVAL SHALL IDENTIFY THE SPECIFIC INFORMATION TO BE RELEASED, THE MEDIUM TO BE USED, AND THE PURPOSE FOR THE RELEASE. THE CONTRACTOR SHALL SUBMIT ITS REQUEST TO THE CONTRACTING OFFICER AT LEAST 45 DAYS BEFORE THE PROPOSED DATE FOR RELEASE.
(C) THE CONTRACTOR AGREES TO INCLUDE A SIMILAR REQUIREMENT IN EACH SUBCONTRACT UNDER THIS CONTRACT. SUBCONTRACTORS SHALL SUBMIT REQUESTS FOR AUTHORIZATION TO RELEASE THROUGH THE PRIME CONTRACTOR TO THE CONTRACTING OFFICER.

AS-BUILT
RECORD DRAWING
LETTER DATED
2017.11.17

SANDRE BELA HOFA FAULKENBERRY ARCHITECTS, P.A. ARCHITECTURAL CORPORATION NORTH CAROLINA CERT. NO. 679 New Bern, NC

A-106

MBFA NO.: 1501
317-C Pollock Street (252) 637-6373
New Bern, NC 28560 mbfarchitects.com

DEPARTMENT OF THE NAVY NAVAL FACILITIES ENGINEERING COMMAND
MARINE CORPS BASE
CAMP LEJEUNE, NORTH CAROLINA

MAJOR INT/EXT REPAIRS
TO BEQ HP295

ENLARGED PLAN AREAS

DES.	HMP
DR.	HMP
CHK.	RTB
SUBMITTED BY:	
DESIGN DIR.	THOMAS BURTON, PE
APPROVED: PWO OR OICC	DATE
SATISFACTORY TO:	DATE

SIZE	CODE IDENT NO.	NAVFAC DRAWING NO.
F	80091	60016766
		CONST. CONTR. NO. N40085-14-B-0168

SCALE: AS NOTED SPEC. 05-14-0168 SHEET 10 OF 101

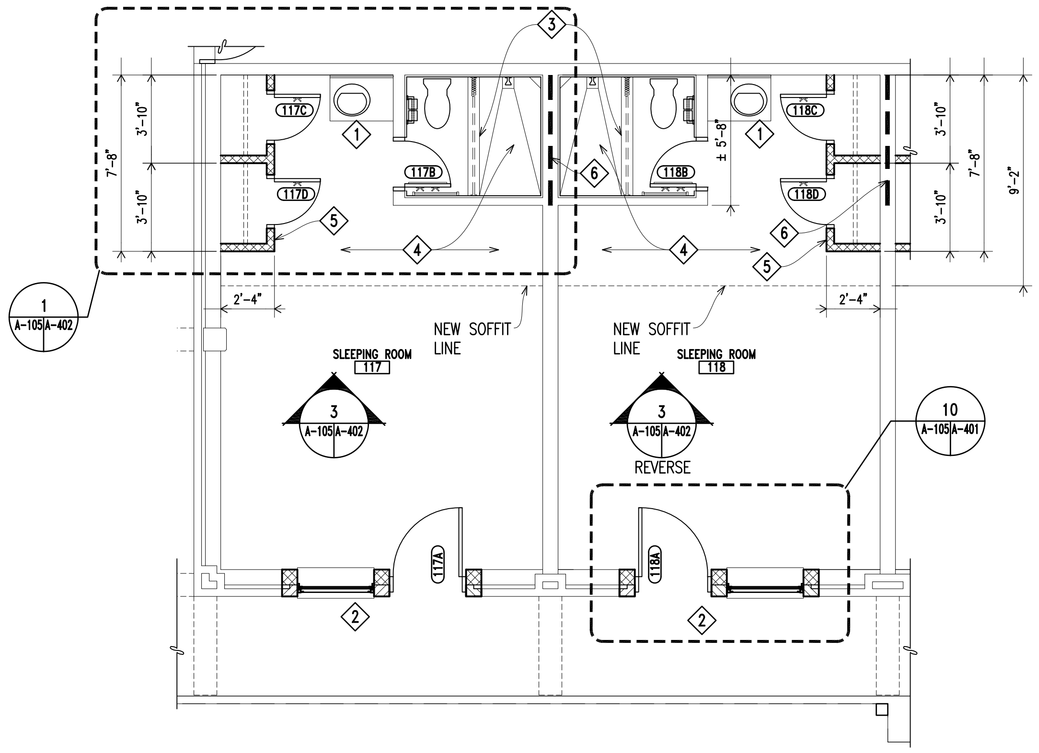

1 A-104/A-105 TYPICAL SLEEPING ROOM
CONSTRUCTION Scale: 1/4" = 1'-0"

SLEEPING ROOMS ON EACH FLOOR ARE IDENTICAL BUT IN SOME CASES, REVERSED.

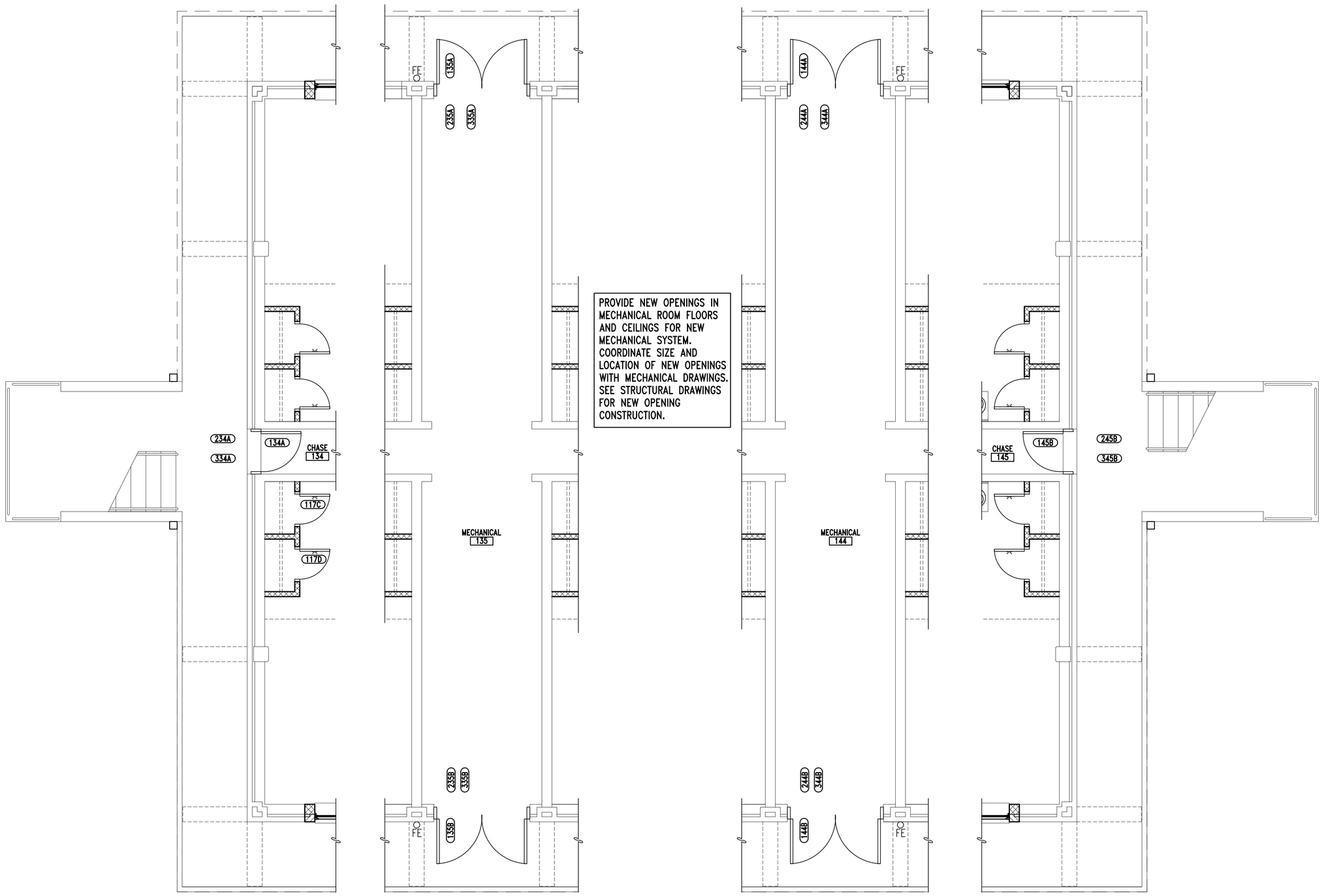

2 A-104/A-105 TYPICAL MECHANICAL ROOM
CONSTRUCTION Scale: 1/4" = 1'-0"

MECHANICAL ROOMS ON EACH FLOOR ARE IDENTICAL.

GRAPHIC SCALE: 1/4"=1'-0"
4' 0 2' 4' 8'

GENERAL NOTES

1. EXISTING DOOR FRAMES THAT ARE TO REMAIN ARE STEEL. CLEAN AND PREPARE (BOTH SIDES) OF ALL FRAMES FOR NEW PAINT FINISHES. EXISTING INTERIOR WALLS ARE PAINTED CONCRETE MASONRY UNLESS NOTED OTHERWISE.
2. PROVIDE NEW FINISHES FOR ALL SPACES AS DESCRIBED IN THE ROOM FINISH SCHEDULE SHEET A-604. SEE COMPREHENSIVE CONSTRUCTION FLOOR PLANS SHEET A-104 FOR ALL ROOM NAMES. ALL DOORS THAT ARE DESIGNATED A DOOR NUMBER SHALL BE NEW. SEE DOOR SCHEDULE SHEET A-601 FOR SPECIFIC INFORMATION, INCLUDING IF A NEW FRAME IS TO BE INSTALLED.
3. SEE LS-001 LIFE SAFETY CODE COMPLIANCE SUMMARY AND LS-101 LIFE SAFETY PLAN FOR LOCATIONS AND HOURLY RATINGS OF FIRE RATED WALLS AND LOCATIONS OF NEW FIRE EXTINGUISHERS.
4. FOR ALL BATHROOMS AND TOILET ROOMS, SEE ENLARGED PLANS AND ELEVATIONS SHEET A-402.

CONSTRUCTION NOTES

APPLY TO THIS SHEET ONLY

1. PROVIDE 24" DEEP X 33" WIDE PLASTIC LAMINATE VANITY CABINET WITH SOLID SURFACE COUNTERTOP AND SOLID POLYMER VANITY BOWL. SEE PLUMBING DRAWINGS FOR ADDITIONAL INFORMATION.
2. PROVIDE INFILL CONSTRUCTION WHERE EXISTING CONSTRUCTION HAS BEEN REMOVED.
3. PROVIDE SHOWER CURBING IN PREVIOUS LOCATION, SEE DETAIL 3/A-403.
4. PROVIDE GYPSUM BOARD SOFFIT AND BULKHEAD IN INDICATED AREA OF SLEEPING ROOM, AND GYPSUM BOARD CEILING IN BATHROOM AND SHOWER. SEE FRAMING PLAN 2/A-107 FOR ADDITIONAL INFORMATION.
5. PROVIDE 4" CONCRETE MASONRY WALLS UP TO UNDERSIDE OF NEW SOFFIT ASSEMBLY ±6'-11" ABOVE FINISHED FLOOR BY DIMENSION SHOWN IN PLAN. PROVIDE (1) #3 BAR VERTICALLY IN THE CELLS AT THE CORNER "T" INTERSECTION OF THE NEW WALLS, AND BESIDE EACH SIDE OF EACH DOOR FRAME. FILL ALL CELLS WITH PEA GRAVEL GROUT AS THE WALLS ARE BUILT. PROVIDE 7/8" WIDE X 7" LONG 18 GAUGE HOT DIPPED GALVANIZED CORRUGATED WALL TIES AT 1'-4" O.C. VERTICALLY AT EACH INTERSECTION TO EXISTING MASONRY.
6. PROVIDE 8" CONCRETE MASONRY INFILL WHERE EXISTING MECHANICAL PLENUM PENETRATED EXISTING 8" CONCRETE MASONRY WALL – SEE 5/A-301 FOR ADDITIONAL INFORMATION. SEE LIFE SAFETY DRAWINGS FOR FIRE RATED WALL LOCATIONS.

DISCLOSURE OF INFORMATION:

CONTRACTOR SHALL COMPLY AS FOLLOWS:
(A) THE CONTRACTOR SHALL NOT RELEASE TO ANYONE OUTSIDE THE CONTRACTOR'S ORGANIZATION ANY UNCLASSIFIED INFORMATION, REGARDLESS OF MEDIUM (E.G. FILM, TAPE, DOCUMENT), PERTAINING TO ANY PART OF THIS CONTRACT OR PROGRAM RELATED TO THE CONTRACT, UNLESS:
(1) THE CONTRACTING OFFICER HAS GIVEN PRIOR WRITTEN APPROVAL; OR
(2) THE INFORMATION IS OTHERWISE IN THE PUBLIC DOMAIN PRIOR TO RELEASE
(B) REQUESTS FOR APPROVAL SHALL IDENTIFY THE SPECIFIC INFORMATION TO BE RELEASED, THE MEDIUM TO BE USED, AND THE PURPOSE FOR THE RELEASE. THE CONTRACTOR SHALL SUBMIT ITS REQUEST TO THE CONTRACTING OFFICER AT LEAST 45 DAYS BEFORE THE PROPOSED DATE FOR RELEASE.
(C) THE CONTRACTOR AGREES TO INCLUDE A SIMILAR REQUIREMENT IN EACH SUBCONTRACT UNDER THIS CONTRACT. SUBCONTRACTORS SHALL SUBMIT REQUESTS FOR AUTHORIZATION TO RELEASE THROUGH THE PRIME CONTRACTOR TO THE CONTRACTING OFFICER.

AS-BUILT
RECORD DRAWING
LETTER DATED
2017.11.17

MARC BELA MOYA FAULKENBERRY ARCHITECTS, P.A. CERT. NO. 679 NORTH CAROLINA New Bern, N.C.

A-105

MBFA NO.: 1501
317-C Pollock Street (252) 637-6373
New Bern, NC 28560 mbfarchitects.com

DEPARTMENT OF THE NAVY NAVAL FACILITIES ENGINEERING COMMAND
MARINE CORPS BASE
CAMP LEJEUNE, NORTH CAROLINA

MAJOR INT/EXT REPAIRS
TO BEQ HP295

DES. HMP
DR. HMP
CHK. RTB
SUBMITTED BY:
DESIGN DIR. THOMAS BURTON, PE
APPROVED: PWO OR OICC DATE
SATISFACTORY TO: DATE

CONSTRUCTION PLANS: SLEEPING & MECHANICAL ROOMS

SIZE	CODE IDENT NO.	NAVFAC DRAWING NO.
F	80091	60016765
		CONST. CONTR. NO. N40085-14-B-0168

SCALE: AS NOTED SPEC. 05-14-0168 SHEET 09 OF 101