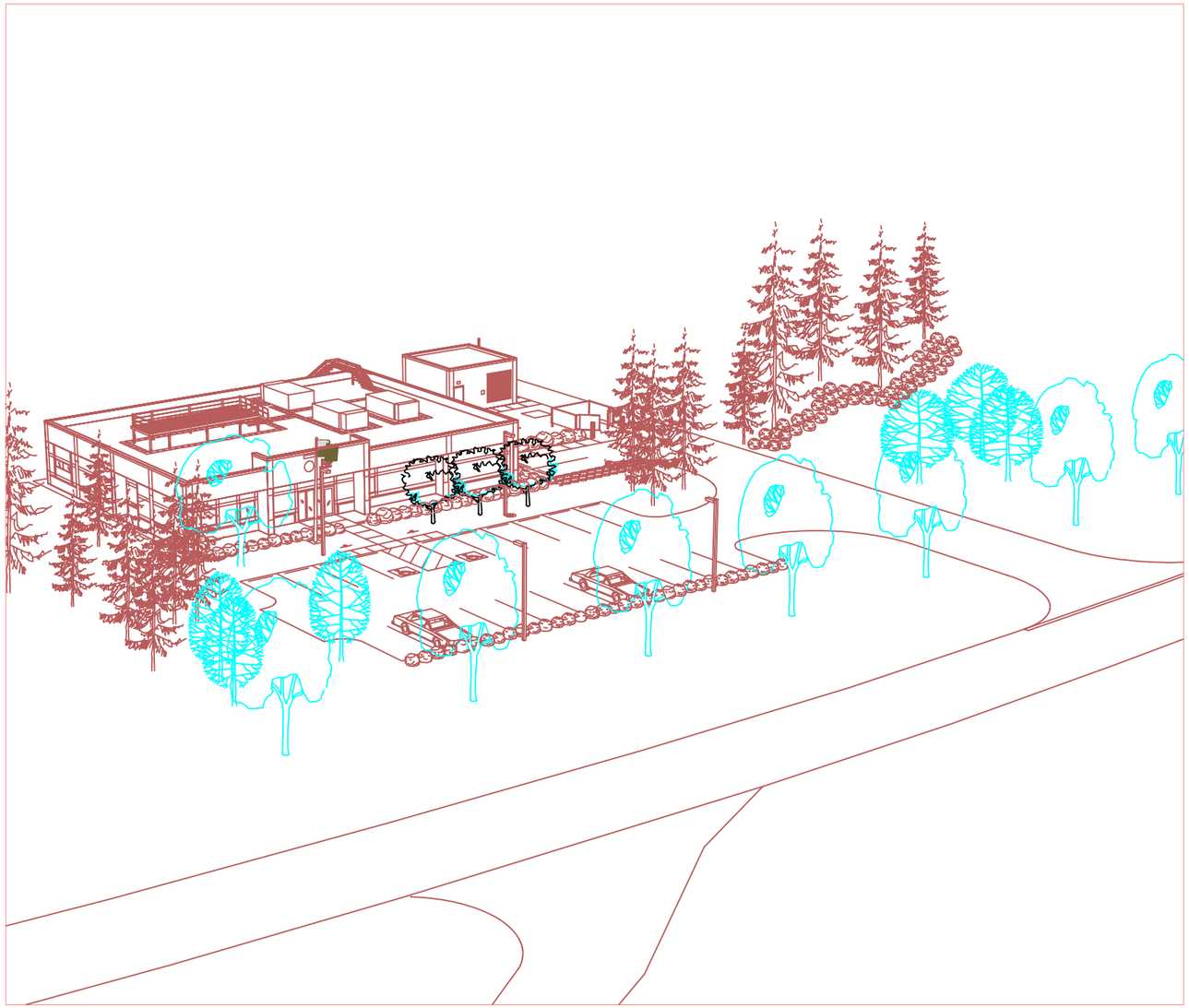

NOAA/
NATIONAL WEATHER SERVICE

FDI CONTRACT NO. 044131

GREENVILLE/SPARTANBURG, SC

AS-BUILT SUBMITTAL
9 OCTOBER 1995
DRAWING NO. SKA01 REV 1
PROJECT NO. 1001

WEATHER FORECAST OFFICE

FLUOR DANIEL
KANSAS CITY, MISSOURI U.S.A.

GOULD EVANS
ASSOCIATES, P.C.

09/27/95 08:34 JAD 1=20' IDSKA011

ABBREVIATIONS

A	ACOUSTIC
@	AT
AB	ANCHOR BOLT
ABV	ABOVE
AC	ALTERNATING CURRENT
AC	ASPHALTIC CONCRETE
ACU	AIR COOLED CONDENSING UNIT
ACI	AMERICAN CONCRETE INSTITUTE
ACST	ACOUSTICAL
ACT	ACOUSTICAL CEILING TILE
A/C	AIR CONDITIONING
AD	ACCESS DOOR
ADJ	ADJUSTABLE
ADJT	ADJACENT
AF	AMP FRAME
AFF	ABOVE FINISH FLOOR
AFOS	AUTOMATION OF FIELD OPERATIONS AND SERVICES
AHU	AIR HANDLING UNIT
AIA	AMERICAN INSTITUTE OF ARCHITECTS
AIC	AMPERES INTERRUPT CURRENT
AISC	AMERICAN INSTITUTE OF STEEL CONSTRUCTION
ALT	ALTERNATE
ALUM	ALUMINUM
AMP, A	AMPERE
ANOD	ANODIZED
ANSI	AMERICAN NATIONAL STANDARDS INSTITUTE
AP	ACCESS PANEL
APD	AIR PRESSURE DROP
APPROX	APPROXIMATE
ARCH	ARCHITECT(URE)(URAL)
AS	AMP SWITCH
ASA	AMERICAN STANDARDS ASSOCIATION, INC.
ASHRAE	AMERICAN SOCIETY OF HEATING, REFRIGERATION AND AIR CONDITIONING ENGINEERS
ASTM	AMERICAN SOCIETY FOR TESTING AND MATERIALS
AT	AMP TRIP
ATS	AUTOMATIC TRANSFER SWITCH
AUTO	AUTOMATIC
AWG	AMERICAN WIRE GAUGE
AWIPS	ADVANCE WEATHER INTERACTIVE PROCESSING SYSTEM
AWS	AMERICAN WELDING SOCIETY
B	BARE
BATT	BATTERY
BC	BEGINNING OF CURVE
BD	BOARD
BDD	BACKDRAFT DAMPER
BEJ	BRICK EXPANSION JOINT
BITUM	BITUMINOUS
BKR	BREAKER
BLDG	BUILDING
BLK	BLOCK
BLKG	BLOCKING
BM	BENCH MARK
BO	BOTTOM OF
BOCA	BUILDING OFFICIALS AND CODE ADMINISTRATORS INTERNATIONAL, INC.
BP	BASE PLATE
BRG	BEARING
BTM	BOTTOM
BTU	BRITISH THERMAL UNIT
BTWN	BETWEEN
BU/BUR	BUILT UP/BUILT UP ROOF
C	CONDENSER/CONDUIT/CONDUCTOR
CAB	CABINET
CAP	CAPACITY
CB	CATCH BASIN
CER	CERAMIC
CFM	CUBIC FEET PER MINUTE
CHAM	CHAMFER
CI	CAST IRON
CIP	CAST IRON PIPE
CJ	CONTROL JOINT
CKT	CIRCUIT
CL	CENTER LINE
CLG	CEILING
CLKG	CAULKING
CLOS	CLOSET
CLR	CLEAR
CMU	CONCRETE MASONRY UNIT
CNTR	COUNTER
CO	CLEANOUT/COMPANY
COE	CORP OF ENGINEERS
COL	COLUMN
COMM	COMMERCIAL/COMMUNICATIONS
COMP	COMPOSITION
CONC	CONCRETE
CONST	CONSTRUCTION
CONT	CONTINUOUS/CONTROL
CONTR	CONTRACTOR
CORR	CORRIDOR
Cp	EXTERNAL PRESSURE COEFFICIENT
Ci	INTERNAL PRESSURE COEFFICIENT
CPT	CARPET
CPT T	CARPET TILE
CR	CONTROL RELAY
CSI	CONSTRUCTION SPECIFICATIONS INSTITUTE
CT	CERAMIC TILE/CURRENT TRANSFORMER
CTR	CENTER, CENTRAL
CU	COPPER
CU FT	CUBIC FEET
CU YD	CUBIC YARD
CUH	CABINET UNIT HEATER
CW	COLD WATER
C TO C	CENTER TO CENTER
⊔	CHANNEL
D	DRAIN
D	PENNY (AS 10D NAIL)
DB	DECIBEL/DRY BULB
DBL	DOUBLE
DC	DIRECT CURRENT
DDG	DIESEL DRIVEN GENERATOR
DDS	DOOR INTERLOCKED DISCONNECT SWITCH
DEG	DEGREE
DEPT	DEPARTMENT
DES	DESIGN
DET	DETECTION
DIA	DIAMETER
DIAG	DIAGONAL/DIAGRAM
DIM	DIMENSION
DISC	DISCONNECT
DISP	DISPENSER
DIV	DIVISION
DK	DECK
DL	DEAD LOAD
DMIC	DEPUTY METEOROLOGIST IN CHARGE
DN	DOWN
DN	DOWNSPOUT NOZZLE
DO	DITTO
DOH	DEVELOPMENT & OPERATIONS HYDROLOGIST
DP	DISTRIBUTION PANEL
DR	DOOR
DS	DOWNSPOUT/DISCONNECT SWITCH
DTL	DETAIL
DW	DISHWASHER
DWG	DRAWING
°F	DEGREE FAHRENHEIT
E	EAST/ELECTRIC (CMIL)
EA	EACH
EAT	ENTERING AIR TEMPERATURE
EB	EXPANSION BOLT
EC	END OF CURVE
EDH	ELECTRIC DUCT HEATER
EF	EACH FACE/EXHAUST FAN
EJ	END JACK/EXPANSION JOINT
EL	ELEVATION
ELEC	ELECTRIC(AL)
ELEC CHAR	ELECTRIC CHARACTERISTIC
ELEV	ELEVATOR
EMER	EMERGENCY
EMT	ELECTRICAL METALLIC TUBING
ENCL	ENCLOSURE
ENG	ENGINE
ENGR	ENGINEER
EPDM	ETHYLENE PROPYLENE DIENE MONOMER
EQ	EQUAL
EQUIP	EQUIPMENT
ESC	ELECTRONIC SPEED CONTROL
ESP	EXTERNAL STATIC PRESSURE
EW	EACH WAY
EWC	ELECTRIC WATER COOLER
EWH	ELECTRIC WATER HEATER
EXH	EXHAUST
EXP	EXPANSION
EXT	EXTERIOR
EXTG	EXISTING
F	FAHRENHEIT/FEEDER
FAO	FINISH ALL OVER
FB	FACE BRICK
FC	FOOT CANDLE
FCO	FLOOR CLEANOUT
FD	FIRE DAMPER/FLOOR DRAIN
FDN	FOUNDATION
FE	FIRE EXTINGUISHER
FEC	FIRE EXTINGUISHER CABINET
FEMA	FEDERAL EMERGENCY MANAGEMENT AGENCY
FG	FINISH GRADE
FH	FIRE HYDRANT
FIN	FINISH
FL	FLOOR
FLA	FULL LOAD AMPS
FLEX	FLEXIBLE
FLR	FLOORING
FLUOR	FLUORESCENT
FM	FORCE MAIN/ OPTIONAL FAN MOTOR
FOC	FACE OF CONCRETE
FOF	FACE OF FINISH
FOM	FACE OF MASONRY
FOS	FACE OF STUD
FR	FIRE RESISTIVE/FRAME
FRTW	FIRE RETARDANT TREATED WOOD
FS	FINISH SURFACE
FSC	FAN SPEED CONTROL
FT OR '	FEET
FTG	FOOTING
FTU	FAN TERMINAL UNIT
F TO F	FACE TO FACE
G	GAS/GUST RESPONSE FACTOR
GA	GAUGE/GAGE
GAL	GALLON
GALV	GALVANIZED
GB	GRAB BAR
GEN/G	GENERAL/GENERATOR
GEP	GENERATOR ENCLOSURE PANEL
GFCI	GROUND FAULT CIRCUIT INTERRUPT
GFE	GOVERNMENT FURNISHED EQUIPMENT
GFM	GOVERNMENT FURNISHED MATERIAL
GI	GALVANIZED IRON
GL	GLASS
GND/G	GROUND
GOVT	GOVERNMENT
GP	GRINDER PUMP
GVL	GRAVEL
GYP	GYPSUM
H	HIGH
HB	HOSE BIB
HC	HOLLOW CORE
HD	HEAD/HEAVY DUTY/ HEAT DETECTOR
HDBD	HARDBOARD
HDW	HARDWARE
HDWD	HARDWOOD
HEM	HIGH EFFICIENCY MOTORS
HG	HOT GAS LINE
HH	HINGED HOOD
HIC	HYDROLOGIST IN CHARGE
HM	HOLLOW METAL(STEEL, U N O)
HOR	HORIZONTAL
HP	HIGH PRESSURE
HP	HORSEPOWER
HPF	HIGH POWER FACTOR
HPS	HIGH PRESSURE SODIUM
HR	HOUR
HS	HIGH STRENGTH
HT	HEIGHT
HTG	HEATING
HTR	HEATER
HU	HUMIDIFIER
HVAC	HEATING, VENTILATING, AND AIR CONDITIONING
HW	HOT WATER
HZ	HERTZ
H PT	HIGH POINT
ID	INSIDE DIAMETER
IE	INVERT ELEVATION
IES	ILLUMINATING ENGINEERING SOCIETY
IF	INSIDE FACE
IGV	INLET GUIDE VANES
IN OR "	INCH
INCL	INCLUDE(D)(ING)
INFO	INFORMATION
INSUL	INSULATION/INSULATED
INT	INTERIOR
INV	INVERT
IP	IRON PIPE
IS	INSECT SCREEN
JAN	JANITOR
JB/J	JUNCTION BOX
JST	JOIST
JT	JOINT
JUNCT	JUNCTION
K	KELVIN/KIP
KCMIL	THOUSAND CIRCULAR MILS
KO	KNOCK OUT
KS	KITCHEN SINK
KVA	KILOVOLT AMPERE
KW	KILOWATT
L	STEEL ANGLE
LA	SURGE AND LIGHTNING ARRESTER
LAM	LAMINATE(D)
LAN	LOCAL AREA NETWORK
LAT	LEAVING AIR TEMPERATURE
LAV	LAVATORY
LBL	LABEL
LBS OR #	POUNDS
LC	LIGHTING CONTACTOR
LD	LOAD
LF	LINEAR FOOT (FEET)
LG	LONG/LENGTH
LH	LEFT HAND
LHR	LEFT HAND REVERSE
LKR	LOCKER
LL	LIVE LOAD
LLH	LONG LEG HORIZONTAL
LLV	LONG LEG VERTICAL
LP	LIGHTING PANEL
LT	LIGHT
LTC	LEE-TEMP CONTROL
LTG	LIGHTING
LTL	LINTEL
LW	LIGHTWEIGHT
L PT	LOW POINT
M	METER(S)/MOTOR
mA	MILLIAMPERE
MACH	MACHINE
MAN	MANUAL
MAS	MASONRY
MATL	MATERIAL(S)
MAX	MAXIMUM
MB	MACHINE BOLT
MBH	1000 X BTU/HR
MBR	MEMBER
MCA	MAXIMUM CIRCUIT AMPS
MCB	MAIN CIRCUIT BREAKER
MD	MANUAL DAMPER
MECH	MECHANICAL
MEMB	MEMBRANE
MFR	MANUFACTURER
MG	MOTOR GENERATOR
MH	MANHOLE
MIC	METEOROLOGIST IN CHARGE
MIN	MINIMUM
MISC	MISCELLANEOUS
MK	MARK
MLDG	MOLDING
MLO	MAIN LUGS ONLY
MLOS	MICROWAVE LINE-OF-SIGHT
MM	MILLIMETER
MO	MASONRY OPENING
MOD	MOTOR OPERATED DAMPER
MOCP	MAXIMUM OVERCURRENT PROTECTION
MS	MOP SINK/2" DEEP SEMI-RECESSED MOUNTING SLEEVE
MTD	MOUNTED
MTG	MOUNTING
MTL	METAL
MULL	MULLION
N	NEUTRAL/NORTH/NORMAL
N/A	NOT APPLICABLE
NAT	NATURAL
NC	NO CEILING
NC	NORMALLY CLOSED
NEC	NATIONAL ELECTRICAL CODE
NEMA	NATIONAL ELECTRICAL MANUFACTURERS ASSOCIATION
NEXRAD	NEXT GENERATION RADAR
NFPA	NATIONAL FIRE PROTECTION ASSOCIATION
NFWH	NON-FREEZE WALL HYDRANT
NGVD	NATIONAL GEODETIC VERTICAL DATUM
NIC	NOT IN CONTRACT
NL	NAILABLE
NO	NORMALLY OPEN
NO OR #	NUMBER
NOM	NOMINAL
NPW	NON POTABLE WATER
NTS	NOT TO SCALE
NWR	NOAA WEATHER RADIO
NWS	NATIONAL WEATHER SERVICE
O TO O	OUT TO OUT
OA	OUTSIDE AIR/OVERALL
OBD	OPPOSED BLADE DAMPER
OC	ON CENTER
OD	OUTSIDE DIAMETER
OF	OUTSIDE FACE
OFC	OFFICE
OH	OPPOSITE HAND/OVERHEAD
OHP	OVERHEAD POWER
OJ	OPEN-WEB JOIST
OPER	OPERATOR/OPERATIONS
OPNG	OPENING
OPP	OPPOSITE
OR	OUTRIGGER
OZ	OUNCE
P	POLE
PAC	PACKAGED AIR CONDITIONING UNIT
PART BD	PARTICLE BOARD
PASS	PASSAGE
PAV	PAVE(D)(MENT)(ER)
PB	PULL BOX/PUSH BUTTON
PBX	PRIVATE BRANCH EXCHANGE
PC	PORTLAND CEMENT
PC	PULL CHAIN/PHOTOCELL
PD	PRESSURE DROP
PERP	PERPENDICULAR
PH OR #	PHASE
PI	POINT OF INTERSECTION
PK	PARK
PKG	PARKING
PL	PLATE/PROPERTY LINE
PLAS	PLASTER
PLBG	PLUMBING
PLCS	PLACES
PLF	POUNDS PER LINEAR FOOT
PLYWD	PLYWOOD
P LAM	PLASTIC LAMINATE
PNEU	PNEUMATIC
PNL	PANEL
POB	POINT OF BEGINNING
POL	POLISHED
PORC	PORCELAIN
PP	PERFORATED PANEL
PP	POWER PANEL
PR	PAIR
PRD	POURED
PRESS	PRESSURE
PROJ	PROJECTION
PRV	PRESSURE REDUCING VALVE
PSF	POUNDS PER SQUARE FOOT
PSI	POUNDS PER SQUARE INCH
PT	PAINT/PLATE, TRUSS
PTC	PHOTO TEMPERATURE CONTROL
PTD	PAINTED
PTRV	PRESSURE AND TEMPERATURE RELIEF VALVE
PUP	PRINCIPAL USER PROCESSOR
PURP	PURPOSE
PVC	POLYVINYL CHLORIDE
PT	PRIVATE
PWR	POWER
%	PERCENT
QT	QUARRY TILE
R	RADIUS/RISER
RA	RETURN AIR
RCB	REMOTE CONTROL BOX
RCP	REINFORCED CONCRETE PIPE
RCPT	RECEPTACLE
RCPTN	RECEPTION
RD	ROAD/ROOF DRAIN
RDA	RADAR DATA ACQUISITION
RE BAR	REINFORCING BAR
REF OR RE	REFERENCE(D)
REFL	REFLECT(ED)(IVE)(OR)
REFR	REFRIGERATOR
REINF	REINFORCE(MENT)(ED)
REQD	REQUIRED
RES	RESILIENT
RET	RETAIN(ING)
REV	REVISIONS
RFC	RIVER FORCAST CENTER
RFG	ROOFING
RG	ROUGH GRADE
RGS	RIGID GALVANIZED STEEL
RH	RIGHT HAND/ROOF HOOD
RHR	RIGHT HAND REVERSE
RJ	RAKE JOINT
RL	REFRIGERANT LIQUID LINE
RLA	RUNNING LOAD AMP
RM	ROOM
RND OR ø	ROUND
RO	ROUGH OPENING
RPG	RADAR PRODUCTS GENERATOR
RPGOP	RADAR PRODUCTS GENERATOR OPERATOR
RPM	REVOLUTIONS PER MINUTE
RS	REFRIGERANT SUCTION LINE
RVS	REVERSE (SIDE)
S	SOUTH
SA	SUPPLY AIR
SB	SPLASH BLOCK
SC	SOLID CORE
SCHED	SCHEDULE
SCT	STRUCTURAL CLAY TILE
SD	SMOKE DAMPER
SD	SMOKE DETECTOR
SD	SOAP DISPENSER
SD	STORM DRAIN
SEC	SECTION
SEP	SEWAGE EJECTOR PUMP
SERV	SERVICE
SEW	SEWER
SF	SPECIAL FRAME
SHT	SHEET
SHLD	SHIELD(ED)
SIM	SIMILAR
SM	SURFACE MOUNTED
SMACNA	SHEET METAL AND AIR CONDITION CONTRACTORS NATIONAL ASSOCIATION
SP	STATIC PRESSURE
SPCS	SPACES
SPEC	SPECIFICATIONS
SPK	SPEAKER
SQ	SQUARE
SS	SANITARY SEWER
SS	SERVICE, SINK
SS	STAINLESS STEEL
SSPC	STEEL STRUCTURE PAINTING COUNCIL
SST	SATURATED SUCTION TEMPERATURE
ST	STREET/SURGE TANK
STA	STATION
STC	SOUND TRANSMISSION CLASS
STC	SOUND TRANSMISSION COEFFICIENT
STD	STANDARD
STL	STEEL
STOR	STORAGE
ST P	STAND PIPE
STR	STRUCTURAL
STS	STORM SEWER
SUBFL	SUBFLOOR
SUSP	SUSPENDED
SW	SWITCH
SYM	SYMMETRICAL
SYS	SYSTEM
T	TELEPHONE/TREAD/ INTEGRAL THERMOSTAT
TB	TERMINAL BLOCK
TBR	TO BE REMOVED
T & G	TONGUE AND GROOVE
TCB	TOP OF CATCH BASIN
TECH	TECHNICAL TECHNICIAN
TEL	TELEPHONE
TEMP	TEMPERATURE
TERM	TERMINAL
TF	TRANSFER FAN
THK	THICK
TKBD	TACK BOARD
TO	TOP OF
TOB	TOP OF BOLT
TOC	TOP OF CONCRETE/CURB
TOM	TOP OF MASONRY
TOP	TOP OF PAVEMENT
TOS	TOP OF STEEL
TOW	TOP OF WALL
TRANSF	TRANSFER
TRANSL	TRANSLUCENT
TRANSP	TRANSPARENT
TS	TUBULAR STEEL/TERMINAL STRIP
TV	TELEVISION
TWR	TOWER
TYP	TYPICAL
U	UTILITY
UBC	UNIFORM BUILDING CODE
UCP	UNIT CONTROL POSITION
UG	UNDERGROUND
UL	UNDERWRITERS LABORATORIES
UNO/UON	UNLESS NOTED OTHERWISE/ UNLESS OTHERWISE NOTED
UPS	UNINTERRUPTIBLE POWER SUPPLY
UR	URINAL
V	VENT/VOLT(AGE)
VA	VOLT AMPERE
VAC	VOLTS ALTERNATING CURRENT
VAR	VARIABLE
VAV	VARIABLE AIR VOLUME
VCP	VITRIFIED CLAY PIPE
VCT	VINYL COMPOSITION TILE
VERT	VERTICAL
VEST	VESTIBULE
VI	VIBRATION ISOLATORS
VIN	VINYL
VOL	VOLUME
VR	VAPOR RETARDER
VT	VINYL TILE
VTR	VENT THRU ROOF
VWC	VINYL WALL COVERING
W	WASTE/WATER/WHITE
WB	WET BULB
W	WATT/WIRE
W	WIDE FLANGE SHAPE STEEL BEAM
W	WEST/WIDE/WIDTH
W/	WITH
W/IN	WITHIN
W/O	WITHOUT
WBRT	WEATHER BUREAU RADIO THEODOLITE
WC	WATER CLOSET
WCO	WALL CLEANOUT
WD	WOOD
WDW	WINDOW
WFO	WEATHER FORECAST OFFICE
WH	WEEP HOLE
WKSTA	WORKSTATION
WP	WEATHERPROOF/WORK POINT/WELL PUMP
WS	WATER STOP
WT	WEIGHT
WTR	WATER
WWF	WELDED WIRE FABRIC
XFMR	TRANSFORMER
YD	YARD
YR	YEAR

REFERENCE SYMBOLS

SECTION, DETAIL OR ELEVATION

SEC, DTL OR ELEV
SCALE: 1/4"=1'-0"

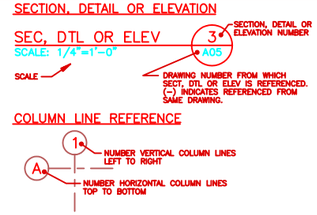

COLUMN LINE REFERENCE

DETAIL REFERENCE

SECTION REFERENCE

ARCHITECTURAL FULL WALL SECTION REFERENCE

ARCHITECTURAL ELEVATION REFERENCE

NORTH ARROW

DOOR NUMBER

ACCESSORY SYMBOL

PARTITION SYMBOL

WORKING POINT ELEVATION

GRAPHIC SCALE

0 2' 4' 8' 12'
SCALE: 1/4"=1'-0"

NOTE REFERENCE

1 A NUMBER WITHIN A BOX INDICATES A SPECIFIC NOTE REFERENCED ON THE SAME DRAWING

PARTITION TYPES

MARK	DESCRIPTION	SKETCH
A	ONE LAYER 5/8" GYPSUM BOARD APPLIED PARALLEL TO 7/8" STL FURRING CHANNELS AT 16" OC ATTACHED TO CONCRETE WALL WITH 1" DRYWALL SCREWS 12" OC AT VERTICAL EDGES AND 16" AT INTERMEDIATE CHANNELS. STC RANGE: N/A FIRE RATING: N/A	
C	BASE LAYER 5/8" GYPSUM WALLBOARD APPLIED PERPENDICULAR AND OR PARALLEL TO EACH SIDE OF 2 1/2" STL STUDS AT 16" OC WITH 1" DRYWALL SCREWS AT 24" OC FACE LAYER 5/8" GYPSUM WALLBOARD APPLIED PERPENDICULAR AND OR PARALLEL TO EACH SIDE OF STUDS WITH 1 5/8" DRYWALL SCREWS 12" OC. STAGGER ALL VERTICAL AND HORIZONTAL JOINTS 16" OC EACH SIDE. STC RANGE: N/A FIRE RATING: N/A	
C A	SAME AS C WITH 2 1/2" FIBER BATT INSULATION IN CAVITY. STC RANGE: 50-54 FIRE RATING: N/A	
D	ONE LAYER 5/8" GYPSUM WALLBOARD APPLIED PARALLEL TO 3 5/8" STL STUDS AT 16" OC. STC RANGE: N/A FIRE RATING: N/A	
D	ONE LAYER 5/8" GYPSUM WALLBOARD APPLIED PERPENDICULAR OR PARALLEL TO EACH SIDE OF 3 5/8" STL STUDS AT 16" OC WITH DRYWALL SCREWS AT 8" OC TO VERTICAL EDGES AND TOP AND BOTTOM RUNNERS, AND 12" OC TO INTERMEDIATE STUDS. STAGGER ALL VERTICAL AND HORIZONTAL JOINTS 16" OC EACH SIDE. STC RANGE: N/A FIRE RATING: N/A	
D A	SAME AS D WITH 3 1/2" FIBER BATT INSULATION. STC RANGE: N/A FIRE RATING: N/A	
F	SAME AS D W/ 6" STL STUDS STC RANGE: N/A FIRE RATING: N/A	
F A	SAME AS F WITH 6" FIBER BATT INSULATION STC RANGE: N/A FIRE RATING: N/A	
F A	SAME AS C A WITH 6" FIBER BATT INSULATION AND 6" STL STUDS. STC RANGE: 45-49 FIRE RATING: N/A	
C A	CHASE WALL: ONE LAYER 5/8" GYPSUM WALLBOARD TO EACH SIDE OF TWO ROWS OF 2 1/2" STL STUDS AT 16" OC WITH 2 LAYERS OF 3 1/2" FIBER BATT INSULATION. WIDTH AS INDICATED ON THE PLANS. (ATTACHMENT SAME AS DESCRIBED FOR D). STC RANGE: N/A FIRE RATING: N/A	

LIST OF DRAWINGS

REV	DWG NO	DRAWING TITLE
1	SKA01	COVER SHEET
1	I01	INDEX/GENERAL INFORMATION
1	C01	OVERALL SITE PLAN
1	C02	SITE UTILITIES PLAN
1	C03	FINISH GRADING PLAN
1	C04	SANITARY SEWER AND WATER PLAN AND PROFILE
1	C05	SANITARY SEWER AND WATER PLAN AND PROFILE
1	C06	SECTIONS AND DETAILS SHEET 1 OF 3
1	C07	SECTIONS AND DETAILS SHEET 2 OF 3
1	C08	SECTIONS AND DETAILS SHEET 3 OF 3
1	A01	LANDSCAPE PLAN
1	A02	FLOOR PLAN
1	A03	ELEVATIONS
1	A04	WALL SECTIONS AND DETAILS
1	A05	DETAILS
1	A06	REFLECTED CEILING PLAN
1	A07	ROOF PLAN AND DETAILS
1	A08	INTERIOR ELEVATIONS AND DETAILS SHEET 1 OF 2
1	A09	INTERIOR ELEVATIONS AND DETAILS SHEET 2 OF 2
1	A10	SCHEDULES
1	A11	DDG/STORAGE BUILDING PLAN, ELEVATIONS AND DETAILS
1	S01	FOUNDATION PLAN
1	S02	ROOF FRAMING PLAN
1	S03	FOUNDATION SECTIONS AND DETAILS SHEET 1 OF 2
1	S04	FOUNDATION SECTIONS AND DETAILS SHEET 2 OF 2
1	S05	MISCELLANEOUS CONCRETE DETAILS
1	S06	COLUMN AND ANCHOR BOLT SCHEDULES/FRAMING ELEVATIONS
1	S07	FRAMING ELEVATIONS AND MISC. STEEL DETAILS
1	S08	FRAMING SECTIONS AND DETAILS SHEET 1 OF 3
1	S09	FRAMING SECTIONS AND DETAILS SHEET 2 OF 3
1	S10	FRAMING SECTIONS AND DETAILS SHEET 3 OF 3
1	S11	DDG/STORAGE BUILDING PLANS, SECTIONS AND DETAILS
1	S12	DDG/STORAGE BUILDING SECTIONS AND DETAILS
1	S13	TRASH ENCLOSURE PLANS, SECTIONS AND DETAILS
1	S14	MISCELLANEOUS YARD STRUCTURES
1	S15	ANTENNA PLATFORM PLANS, SECTIONS, AND DETAILS
1	M01	PLUMBING PLAN
1	M02	PLUMBING DETAILS AND SCHEDULES
1	M03	HVAC PLAN
1	M04	HVAC SECTIONS AND DETAILS
1	M05	HVAC TEMPERATURE CONTROLS
1	M06	HVAC SYMBOLS, SCHEDULES AND LEGEND
1	M07	DIESEL DRIVEN GENERATOR AND FUEL TANK
1	E01	LEGEND AND FIXTURE SCHEDULE
1	E02	ONE-LINE DIAGRAM
1	E03	PANELBOARDS, SCHEMATICS AND CONTROL DIAGRAMS
1	E04	ELECTRICAL SITE PLAN
1	E05	ELECTRICAL GROUNDING PLAN
1	E06	ELECTRICAL POWER PLAN
1	E07	COMMUNICATIONS AND CONTROLS PLAN
1	E08	ELECTRICAL LIGHTING PLAN
1	E09	ELECTRICAL DDG/STORAGE BUILDING
1	E10	ELECTRICAL SECTIONS AND DETAILS
1	E11	FIRE DETECTION PLAN

NOTICE
TO BIDDERS ONLY

DRAWINGS MAY NOT NECESSARILY BE FULL SIZE. THE BIDDERS SHALL VERIFY THE SCALE OF EACH DRAWING WITH THE BAR SCALES AND THE DIMENSIONS PROVIDED.

MATERIAL SYMBOLS

PLAN/ SECTION	MATERIAL	ELEVATION
	FLOOR TILE	
	CARPET	
	GLASS	
	IRON OR STEEL	
	EARTH	
	SAND, GRAVEL, OR CRUSHED ROCK	
	STONE	
	ASPHALT PAVING	
	CONCRETE	
	BRICK VENEER	
	MASONRY BLOCK	
	PLASTER, EFS, OR POURED GYPSUM	
	GYPSUM BOARD	
	WOOD	
	INSULATION	
	ACOUSTICAL TILE	

CODE INFORMATION

GOVERNING CODES
1991 UNIFORM BUILDING CODE
1990 NATIONAL ELECTRICAL CODE
1993 NATIONAL STANDARD PLUMBING CODE
1991 UNIFORM MECHANICAL CODE
AMERICAN CONCRETE INSTITUTE STANDARD 318-89
AISC SPECIFICATION FOR STRUCTURAL STEEL BUILDINGS ASD-89

GROSS AREA: 5,732 SQUARE FEET
OCCUPANCY: B2
OCCUPANT LOAD: 57 PERSONS
CONSTRUCTION TYPE: TYPE V N

NO.	DATE	PREPARED BY	CHECKED BY	PGM APPROVED	ACOTR/COTR APPROVED	DESCRIPTION OF REVISION
1	10/9/95	JAD	HWJ	ERP/RRW	FGR/JTS	REVISED PER AS-BUILT CONDITIONS

WFO / NEXRAD PROGRAM
PROJECT NO. I001

PROGRAM MANAGEMENT SERVICES CONTRACTOR
FLUOR DANIEL
GOULD EVANS ARCHITECTS, P.A.
ANNAPOLIS JUNCTION, MD. U.S.A.

SAFETY SHOULD ALWAYS BE FIRST WITH EVERY TASK YOU DO

SEPD

DRAWN: M.KAUFFMAN
CHECKED: MCK
SUP'V. ENGR.: HWJ
ENGR/PROJ. MGR.: BUS/RRW
ACOTR/COTR: EHM/JTS

SPECIAL ENGINEERING PROGRAM OFFICE (SEPO)
WEATHER FORECAST OFFICE
GREENVILLE/SPARTANBURG, SC
INDEX/GENERAL INFORMATION

044131-	SIZE 5	DWG. NO. I01	CLIN. 10	REV. 1

FDSP0043 KCI0011 JAD 09/27/95@08:12

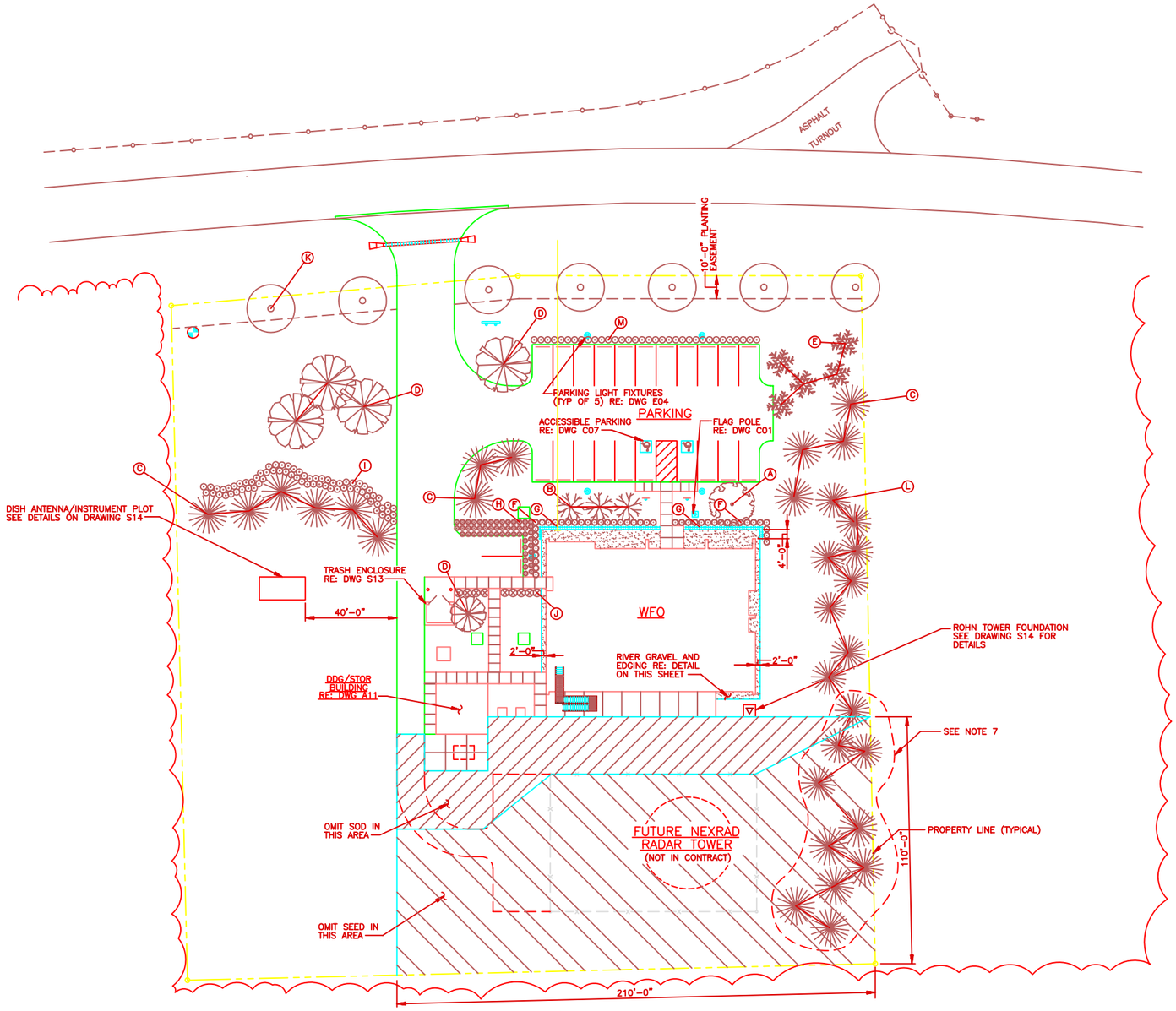

LANDSCAPE PLAN

SCALE : 1"=20'

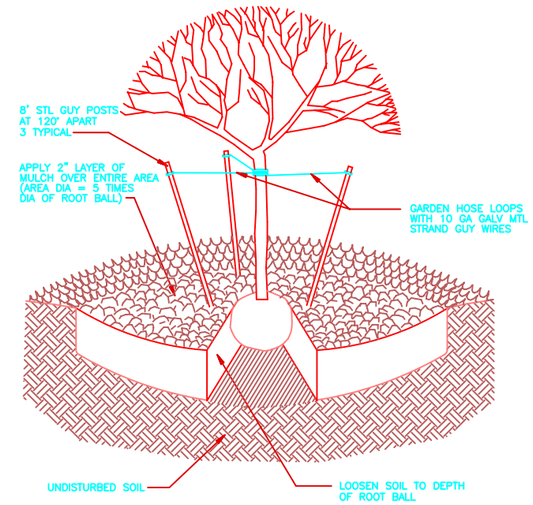

TYPICAL TREE PLANTING DETAIL

SCALE: NONE

NOTE: WATER HOLDING BERM NOT RECOMMENDED

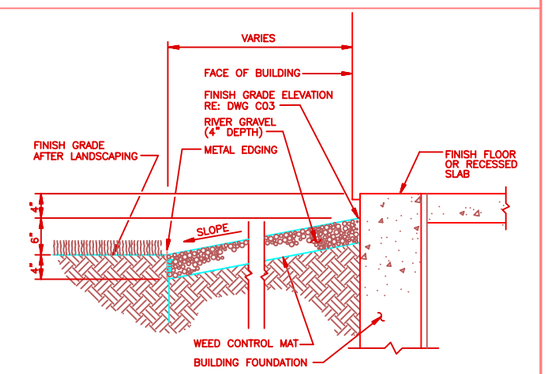

TYPICAL RIVER GRAVEL AND EDGING DETAIL

SCALE: NONE

NOTES

1. SOD ALL AREAS WITHIN PROPERTY LINE DISTURBED BY CONSTRUCTION NOT OTHERWISE COVERED WITH PAVING , BUILDING, OR LANDSCAPE.
2. SEED OFF SITE AREAS DISTURBED BY LAYDOWN, PARKING AND WATER AND SEWER CONSTRUCTION. REFER TO SHEET C02 FOR LOCATION.
3. SEE CIVIL DRAWINGS FOR ACTUAL SITE LAYOUT, SIDEWALKS, AND PAVING.
4. LANDSCAPE DRAWING A01 IS FOR LANDSCAPE PURPOSES ONLY.
5. TREES SHALL BE PLANTED PER TYPICAL TREE PLANTING DETAIL.
6. SHRUBS SHALL BE PLANTED PER SPECIFICATIONS.
7. CONTACT THE CONTRACT ADMINISTRATOR BEFORE PLANTING THE TREES BY THE FUTURE NEXRAD RADAR TOWER.

PLANTING KEY

TYPE	COMMON NAME	BOTANICAL NAME	QTY	SIZE
A	SCARLET OAK	QUERCUS COCCINEA (MULTI-TRUNKED)	1	15' TALL MULTI-TRUNKED (3) SPECIMEN QUALITY
B	NATCHEZ CRAPE MYRTLE	LAGERSTROEMIA INDICA 'NATCHEZ'	3	SINGLE-TRUNK TREE-FORM 8' - 10' TALL
C	EASTERN WHITE PINE	PINUS STROBUS	13	6' - 8' TALL
D	OCTOBER GLORY RED MAPLE	ACER RUBRUM 'OCTOBER GLORY'	4	2" CALIPER
E	CHEROKEE PRINCESS DOGWOOD	CORNUS FLORIDA 'CHEROKEE PRINCESS'	5	1 1/2" CALIPER
F	SCHELLING'S DWARF YAUPON HOLLY	ILEX VOMITORIA 'SCHELLING'S DWARF'	45	5 GALLON
G	COLORATUS WINTERCREEPER	EUONYMUS FORTUEI VAR. COLORATUS	90	1 GALLON
H	CORAL BEAUTY COTONEASTER	COTONEASTER DAMMERI 'CORAL BEAUTY'	45	3 GALLON
I	HEAVENLY BAMBOO	NANDINA DOMESTICA	66	3 GALLON
J	FORTUNE'S OSMANTHUS	OSMANTHUS X FORTUNEI	9	5 GALLON
K	WILLOW OAK	QUERCUS PHELLUS	7	PLANT AT 40' OC
L	EASTERN WHITE PINE	PINUS STROBUS	18	3-4' TALL
M	ROTUNDA HOLLY	ILEX CORNUTA 'ROTUNDA'	35	5 GALLON

0 10' 20' 40' 60'
SCALE: 1"=20'

NO.	DATE	PREPARED BY	CHECKED BY	AS APPROVED	AS-BUILT APPROVED	DESCRIPTION OF REVISION
1	10/9/95	JAD	HWJ	ERP/RRW	FGR/JTS	REVISED PER AS-BUILT CONDITIONS

WFO / NEXRAD PROGRAM
PROJECT NO. 0101

PROGRAM MANAGEMENT SERVICES CONTRACTOR
FLUOR DANIEL GOULD EVANS ARCHITECTS, P.A.
KANSAS CITY, MO. U.S.A.

SAFETY SHOULD ALWAYS BE FIRST WITH EVERY TASK YOU DO

DIVISION OF SPECIAL ENGINEERING PROGRAMS OFFICE OF SYSTEMS ENGINEERING AND ARCHITECTURAL MANAGEMENT
SEPO

DRAWN: M.RAUFFMAN
CHECKED: MCK
SUP'V. ENGR.: HWJ
ENGR/PROJ. MGR.: BLR/RRW
ACQTS/CORR.: EKM/JTS

SPECIAL ENGINEERING PROGRAM OFFICE (SEPO)

WEATHER FORECAST OFFICE
GREENVILLE/SPARTANBURG, SC

LANDSCAPE PLAN

044131-	SIZE 5	DWG. NO. A01	CLIN. 10	REV. 1

FDSP0043 KCOA011 JAD 10/02/95@08:55

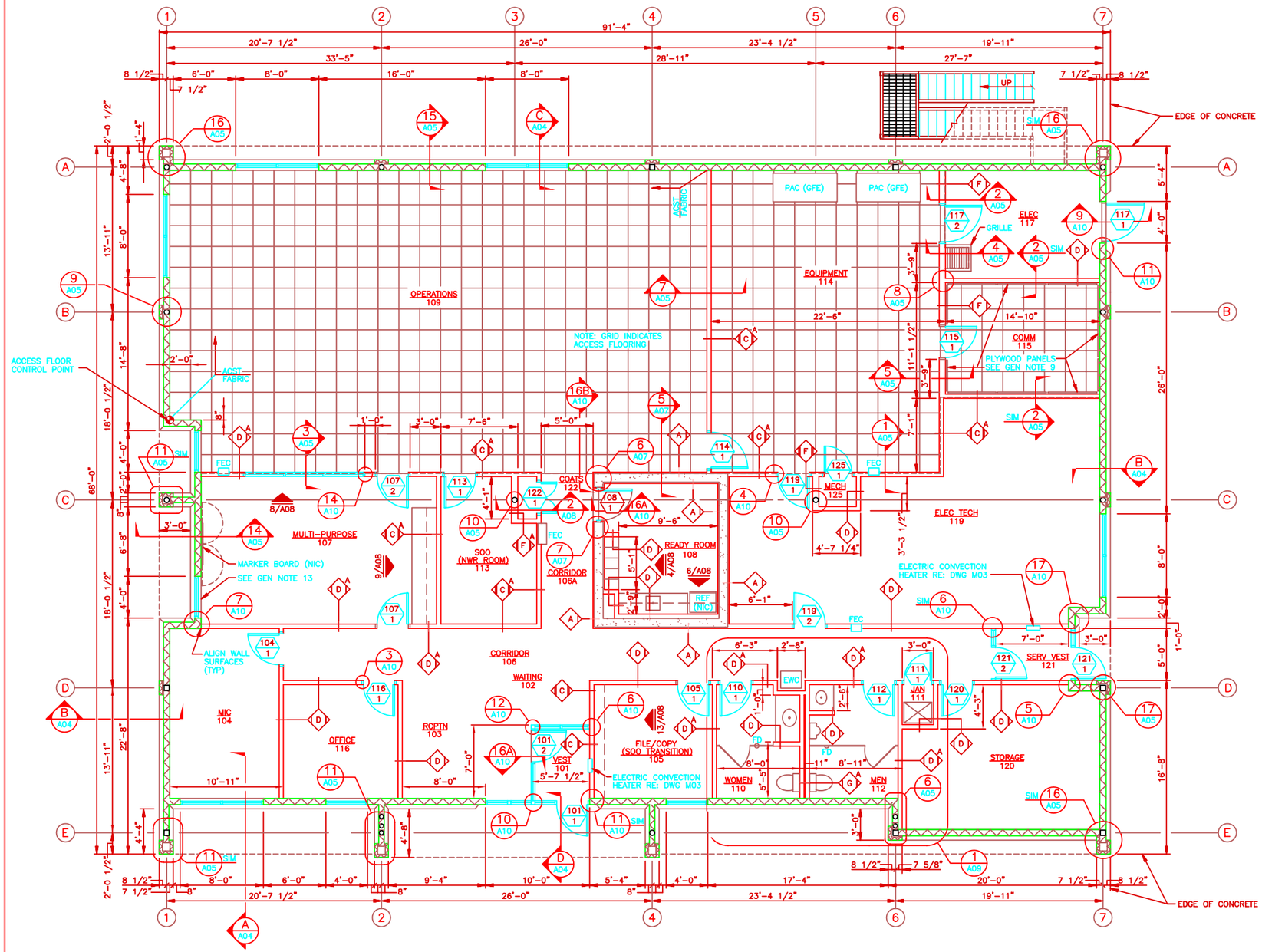

FLOOR PLAN
SCALE: 1/4"=1'-0"

BUILDING NORTH

GENERAL NOTES

1. FOR DRAWING LIST, ABBREVIATIONS, SYMBOLS AND PARTITION TYPES, REFER TO DRAWING I01.
2. DIMENSIONS ARE FROM COLUMN LINE TO FINISHED FACE OR FROM FINISHED FACE TO FINISHED FACE OF PARTITIONS UNLESS NOTED OTHERWISE. EXTERIOR DIMENSIONS ARE TO FACE OF CONCRETE FOUNDATION WALL.
3. FINISH FLOOR ELEV = 0'-0" (EXCEPT AT ACCESS FLOOR) SEE DRAWING C01 FOR ACTUAL ELEVATIONS.
4. SEE DRAWING C02 FOR SIDEWALK LOCATIONS.
5. DO NOT SCALE DRAWINGS.
6. PROVIDE VENETIAN BLINDS AT ALL EXTERIOR GLAZED OPENINGS EXCEPT AT VEST 101 AND SERV VEST 121. BLIND WIDTH SHALL FIT INSIDE MULLIONS AT ALL LOCATIONS.
7. PROVIDE VENETIAN BLINDS AT INTERIOR GLAZED OPENINGS OF MULTI-PURPOSE 107. BLIND WIDTH SHALL FIT INSIDE THE MULLIONS.
8. PROVIDE CONTINUOUS VAPOR RETARDER AT ALL EXTERIOR WALLS. SEAL AT ALL EDGES AND PENETRATIONS.
9. PROVIDE 3/4" PLYWOOD SHEETS MOUNTED WALL TO WALL (TYP FOR WALLS IN COMM ROOM #115). PLYWOOD SHALL EXTEND FROM 2" BELOW ACCESS FLOOR TO STRUCTURE ABOVE.
10. FOR TYPICAL EXTERIOR WALL CONSTRUCTION AND NOTES SEE DETAIL ON SHEET A06.
11. REFER TO ELEVATIONS, SHEET A03 FOR CONTROL JOINT LOCATIONS.
12. REFER TO SHEET A11 FOR DDG/STORAGE BUILDING DRAWINGS.
13. PROVIDE 12" x 12" HINGED ACCESS PANEL TO CONCEAL THRU-WALL CONDUITS. REFER TO ATTACHMENT "B" FOR FINISH. REFER TO DRAWING E06 FOR LOCATION.

0 2' 4' 8' 12'
SCALE: 1/4"=1'-0"

NO.	DATE	PREPARED BY	CHECKED BY	FSR APPROVED	ACOR/COTR APPROVED	DESCRIPTION OF REVISION
1	10/9/95	JAD	HWJ	REP/RRW	FGR/JTS	REVISED PER AS-BUILT CONDITIONS

WFO / NEXRAD PROGRAM
PROJECT NO. I001

PROGRAM MANAGEMENT SERVICES CONTRACTOR
FLUOR DANIEL
GOULD EVANS ARCHITECTS, P.A.
KANSAS CITY, MO. U.S.A.

SAFETY SHOULD ALWAYS BE FIRST WITH EVERY TASK YOU DO

DRAWN M.KAUFFMAN
CHECKED MCK
SUP'V. ENGR. HWJ
ENGR/PROJ. MGR. BLR/RRW
ACOR/COTR EHM/JTS

SPECIAL ENGINEERING PROGRAM OFFICE (SEPO)

WEATHER FORECAST OFFICE
GREENVILLE/SPARTANBURG, SC

FLOOR PLAN

044131-	SIZE 5	DWG. NO. A02	CLIN. I0	REV. 1

FDSP0043 KCOA021 JAD 10/02/95@09:15

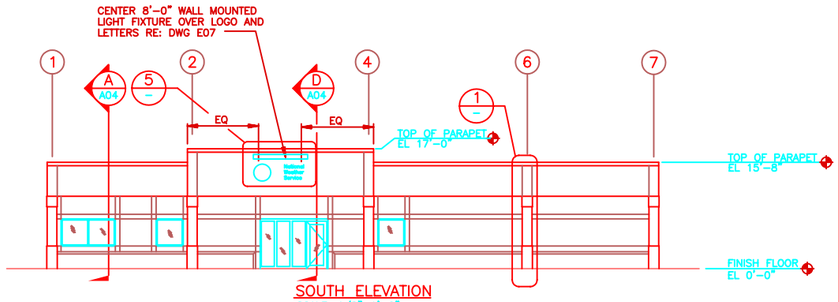

SOUTH ELEVATION
SCALE: 1/8"=1'-0"

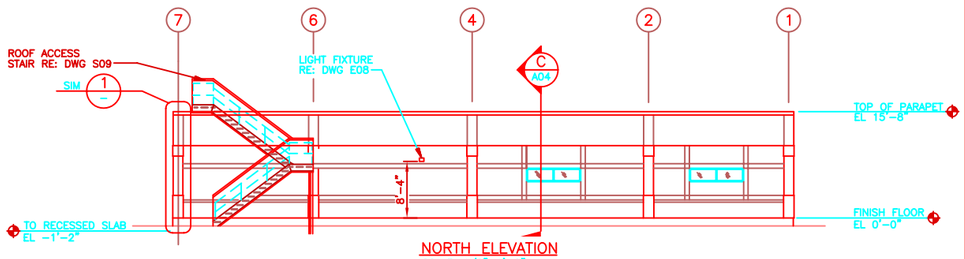

NORTH ELEVATION
SCALE: 1/8"=1'-0"

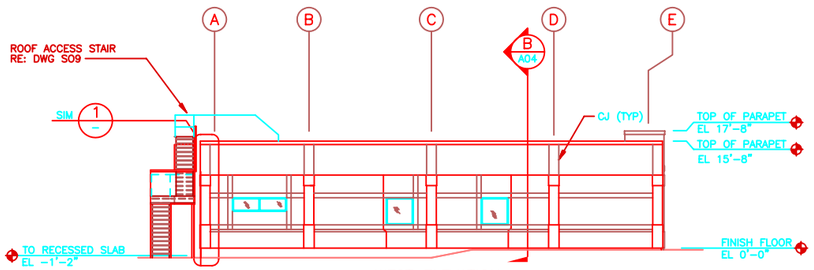

WEST ELEVATION
SCALE: 1/8"=1'-0"

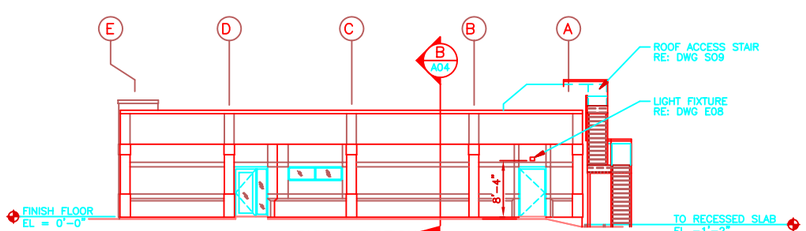

EAST ELEVATION
SCALE: 1/8"=1'-0"

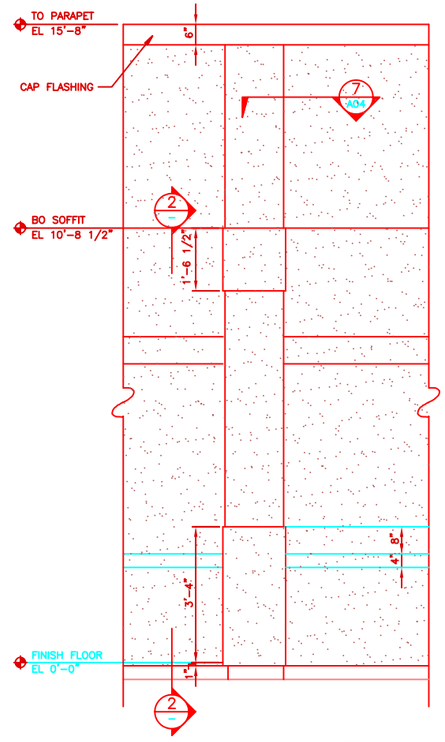

DETAIL
SCALE: 3/4"=1'-0"

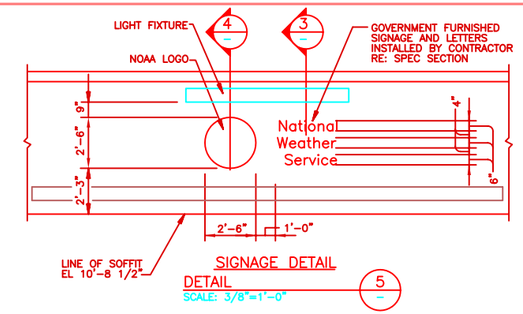

SIGNAGE DETAIL
DETAIL
SCALE: 3/8"=1'-0"

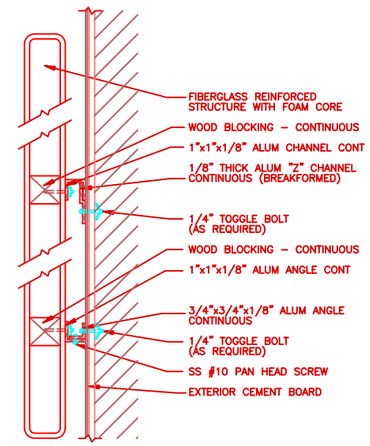

SECTION
SCALE: NONE

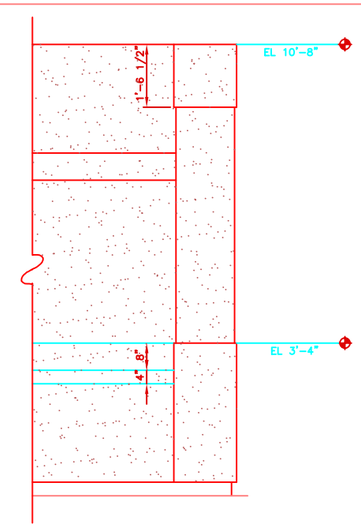

SECTION
SCALE: 3/4"=1'-0"

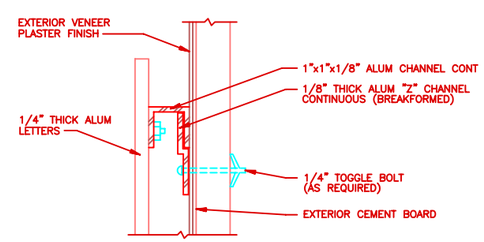

SECTION
SCALE: NONE

0 4' 8' 16' 24'
SCALE: 1/8"=1'-0"

0 2' 4' 6' 8'
SCALE: 3/8"=1'-0"

0 1' 2' 3' 4'
SCALE: 3/4"=1'-0"

NO.	DATE	PREPARED BY	CHECKED BY	PDI APPROVED	ACOR/COTR APPROVED	DESCRIPTION OF REVISION
1	10/9/95	JAD	HWJ	ERP/RRW	FGR/JTS	REVISED PER AS-BUILT CONDITIONS

WFO / NEXRAD PROGRAM
PROJECT NO. 1001

PROGRAM MANAGEMENT SERVICES CONTRACTOR
FLUOR DANIEL
GOULD EVANS ARCHITECTS, P.A.
KANSAS CITY, MO. U.S.A.

SAFETY SHOULD ALWAYS BE FIRST WITH EVERY TASK YOU DO

DRAWN M.KAUFFMAN
CHECKED MCK
SUPV. ENGR. HWJ
ENGR/PROJ. MGR. BLR/RRW
ACOR/COTR EPM/JTS

SPECIAL ENGINEERING PROGRAM OFFICE (SEPO)

WEATHER FORECAST OFFICE
GREENVILLE/SPARTANBURG, SC

ELEVATIONS

SIZE	DWG. NO.	CLIN.	REV.
044131– 5	A03	10	1

FDSP0043 KCOA031 JAD 10/02/95@09:14

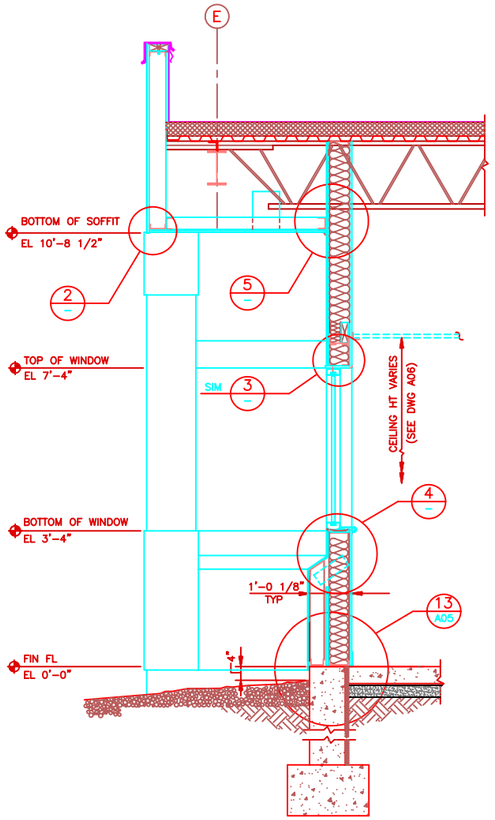

SECTION A
SCALE: 3/4"=1'-0"
A02 A03 A06 A07

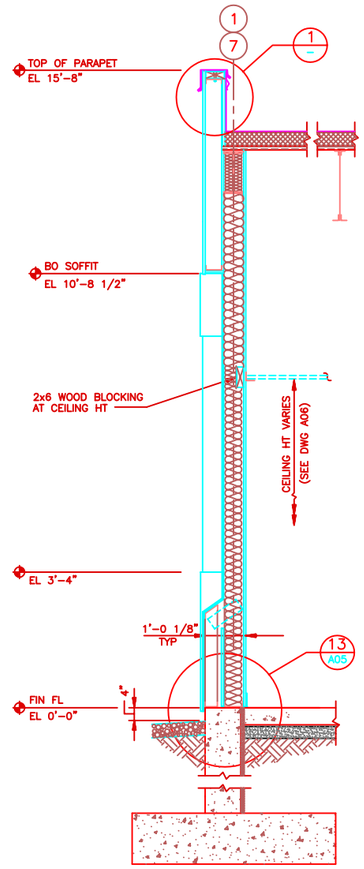

SECTION B
SCALE: 3/4"=1'-0"
A02 A03 A06 A07

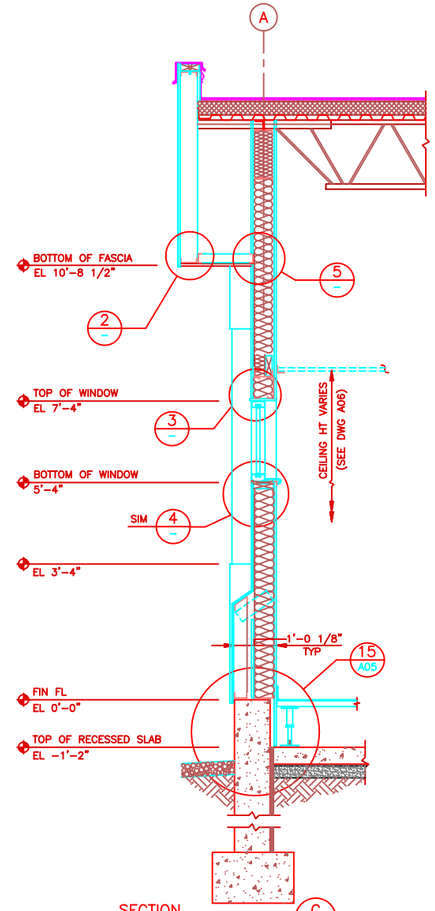

SECTION C
SCALE: 3/4"=1'-0"
A02 A03 A06 A07

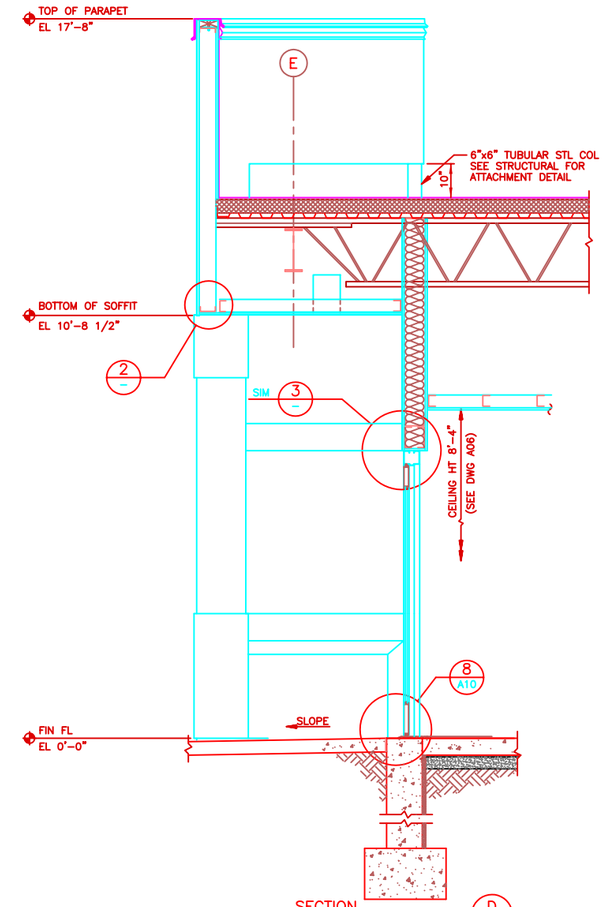

SECTION D
SCALE: 3/4"=1'-0"
A02 A03 A06 A07

NOTE: SEE STRUCTURAL DWGS FOR JOIST ATTACHMENT DETAILS

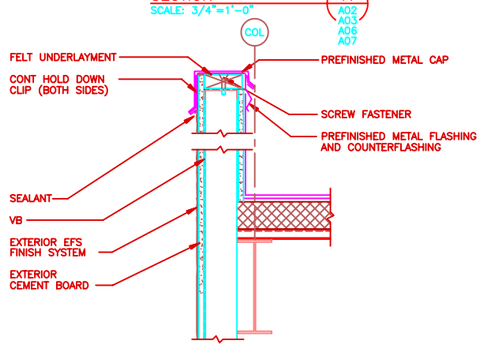

DETAIL 1
SCALE: 1 1/2"=1'-0"

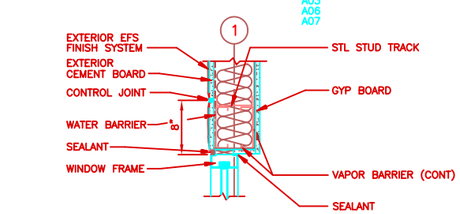

HEAD

DETAIL 3
SCALE: 1 1/2"=1'-0"

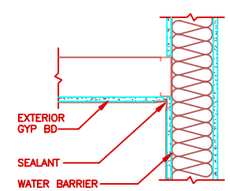

SOFFIT

DETAIL 5
SCALE: 1 1/2"=1'-0"

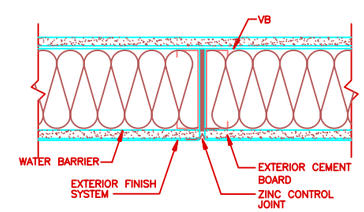

SECTION 7
SCALE: 1 1/2"=1'-0"
A03

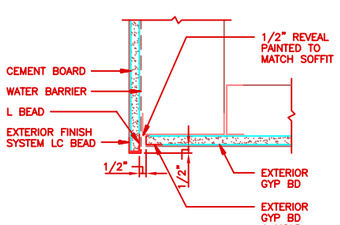

DETAIL 2
SCALE: 1 1/2"=1'-0"

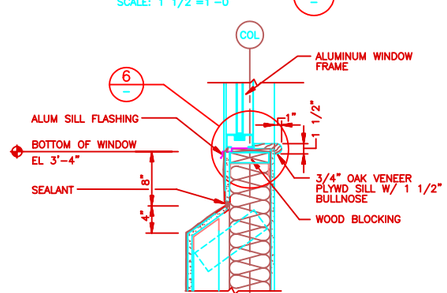

DETAIL SILL 4
SCALE: 1 1/2"=1'-0"

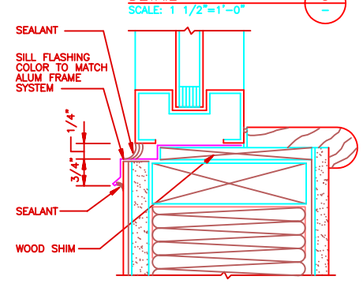

DETAIL SILL 6
SCALE: 3/8"=1'-0"

NOTE: RETURN BULL NOSE EDGE AT EACH END OF SILL. REFER TO DETAIL 7/A10.

0 1' 2' 3' 4'
SCALE: 3/4"=1'-0"

0 6" 1' 2'
SCALE: 1 1/2"=1'-0"

NO.	DATE	PREPARED BY	CHECKED BY	ESD APPROVED	ACOE/CORPS APPROVED	DESCRIPTION OF REVISION
1	10/9/95	JAD	HWJ	ERP/RRW	FGR/JTS	REVISED PER AS-BUILT CONDITIONS

WFO / NEXRAD PROGRAM
PROJECT NO. I001

PROGRAM MANAGEMENT SERVICES CONTRACTOR
FLUOR DANIEL
GOULD EVANS ARCHITECTS, P.A.
KANSAS CITY, MO. U.S.A.

SAFETY SHOULD ALWAYS BE FIRST WITH EVERY TASK YOU DO

SEPO

DRAWN: M.KAUFFMAN
CHECKED: MCK
SUP'V. ENGR.: HWJ
ENGR/PROJ. MGR.: BLR/RRW
ACOE/CORPS: EKM/JTS

SPECIAL ENGINEERING PROGRAM OFFICE (SEPO)

WEATHER FORECAST OFFICE
GREENVILLE/SPARTENBURG, SC

WALL SECTIONS AND DETAILS

044131-	SIZE 5	DWG. NO. A04	CLIN. I0	REV. 1

FDSP0043 KC0A041 JAD 10/02/95@09:20

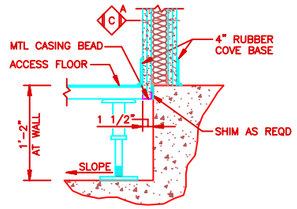

SECTION 1 A02
SCALE: 1 1/2"=1'-0"

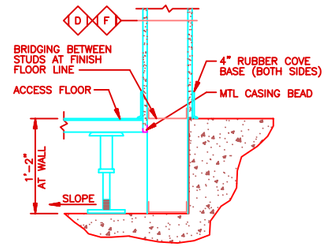

SECTION 2 A02
SCALE: 1 1/2"=1'-0"

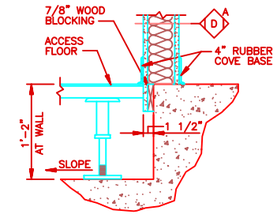

SECTION 3 A02
SCALE: 1 1/2"=1'-0"

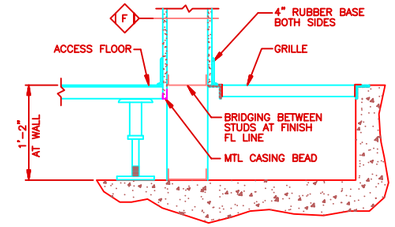

SECTION 4 A02
SCALE: 1 1/2"=1'-0"

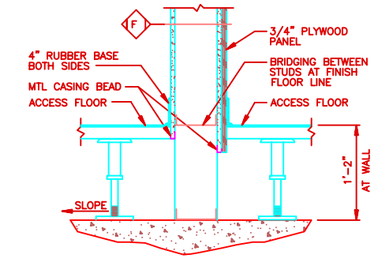

SECTION 5 A02
SCALE: 1 1/2"=1'-0"

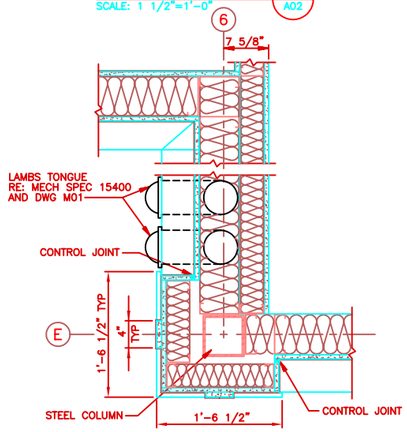

DETAIL 6 A02
SCALE: 1 1/2"=1'-0"

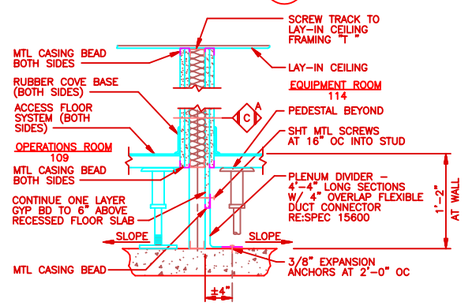

SECTION 7 A02
SCALE: 1 1/2"=1'-0"

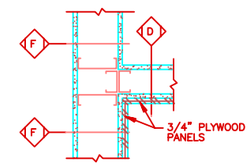

DETAIL 8 A02
SCALE: 1 1/2"=1'-0"

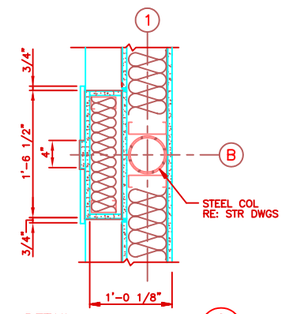

DETAIL 9 A02
SCALE: 1 1/2"=1'-0"

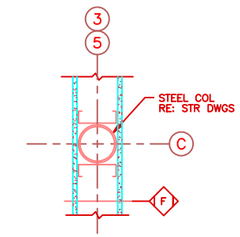

DETAIL 10 A02
SCALE: 1 1/2"=1'-0"

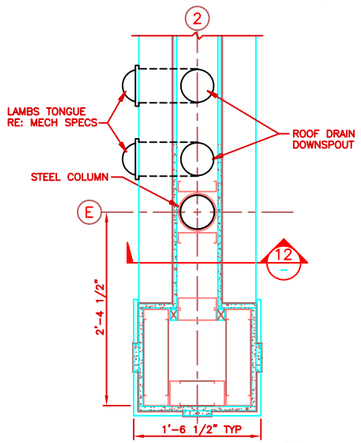

DETAIL 11 A02
SCALE: 1 1/2"=1'-0"

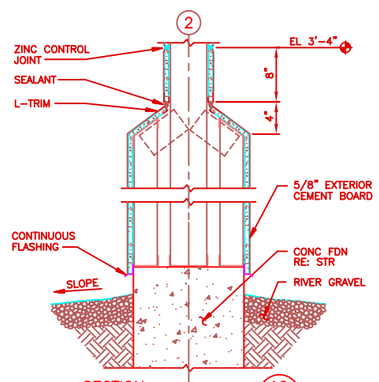

SECTION 12 –
SCALE: 1 1/2"=1'-0"

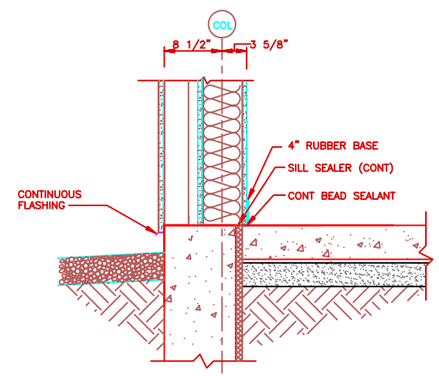

DETAIL 13 A04
SCALE: 1 1/2"=1'-0"

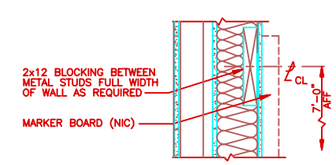

MARKER BOARD BLOCKING
SECTION 14 A02
SCALE: 1 1/2"=1'-0"

NOTE: ALIGN BOTTOM OF MARKER BOARD WITH TOP OF WINDOW SILL (3'-4").

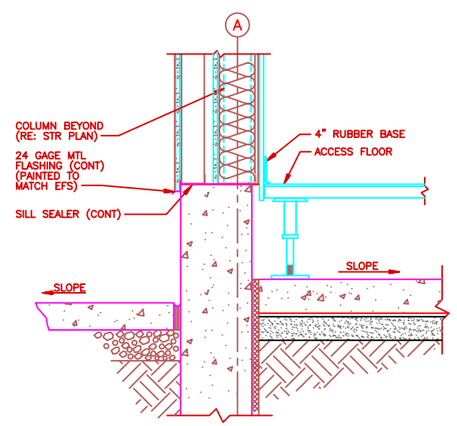

SECTION 15 A02 A04
SCALE: 1 1/2"=1'-0"

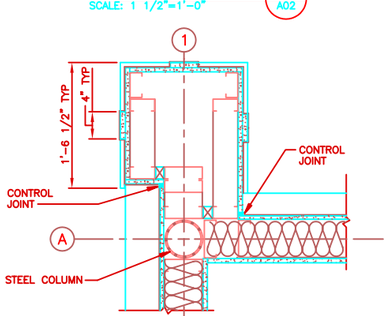

DETAIL 16 A02
SCALE: 1 1/2"=1'-0"

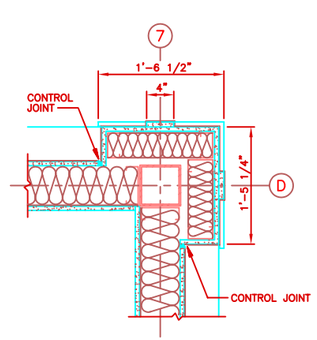

DETAIL 17 A02
SCALE: 1 1/2"=1'-0"

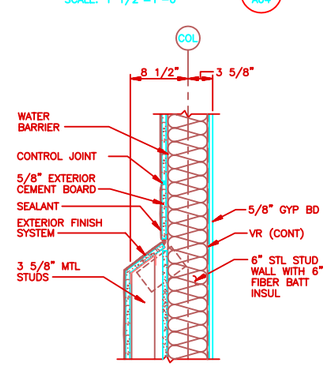

TYPICAL EXTERIOR WALL DETAIL
SCALE: 1 1/2"=1'-0"

0 6" 1' 2'
SCALE: 1 1/2"=1'-0"

NO.	DATE	PREPARED BY	CHECKED BY	RSE APPROVED	ACOR/COR APPROVED	DESCRIPTION OF REVISION
1	10/9/95	JAD	HWJ	ERP/RRW	FGR/JTS	REVISED PER AS-BUILT CONDITIONS

WFO / NEXRAD PROGRAM
PROJECT NO. 1001

PROGRAM MANAGEMENT SERVICES CONTRACTOR
FLUOR DANIEL
GOULD EVANS ARCHITECTS, P.A.
KANSAS CITY, MO. U.S.A.

SAFETY SHOULD ALWAYS BE FIRST WITH EVERY TASK YOU DO

DIVISION: M.KAUFFMAN
CHECKED: MCK
SUPV. ENGR.: HWJ
ENGR/PROJ. MGR.: BLM/RRW
ACOR/COR: ERM/JTS

SPECIAL ENGINEERING PROGRAM OFFICE (SEPO)

WEATHER FORECAST OFFICE
GREENVILLE/SPARTANBURG, SC

DETAILS

SIZE	DWG. NO.	CLIN.	REV.
044131– 5	A05	10	1

FDSP0043 KCOA051 JAD 10/02/95@9:25

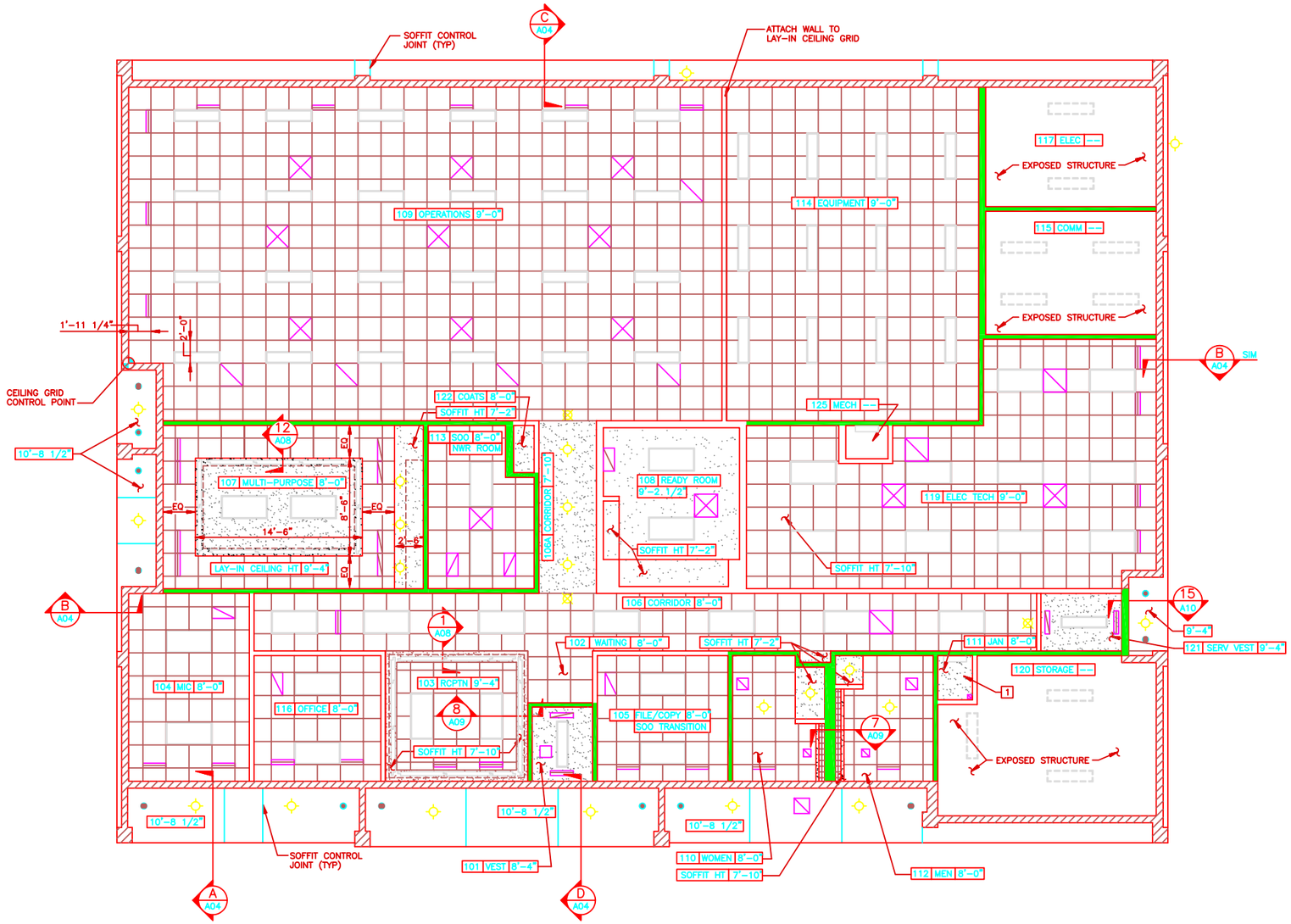

REFLECTED CEILING SYMBOLS

RM NO | ROOM NAME | CLG HT

- FLUORESCENT FIXTURE
- FLUORESCENT FIXTURE
- FLUORESCENT FIXTURE – CHAIN HUNG OR PENDANT MOUNT
- WALL MOUNT FLUORESCENT FIXTURE
- STRIP FLUORESCENT FIXTURE
- COVE LIGHTING LOUVERS
- EXIT SIGN
- WALL MTD HID FIXTURE
- RECESSED CAN LIGHT
- LINEAR SLOT DIFFUSER
- LINEAR SLOT RETURN
- 2 1/2" ø MTL SOFFIT VENT
- SUPPLY AIR DIFFUSER
- RETURN AIR GRILLE
- EXHAUST FAN
- 2x2 ACST LAY-IN TILE CEILING GRID PATTERN
- INTERIOR PARTITION TO EXTEND TO BOTTOM OF DECK
- INTERIOR PARTITION GYP BOARD TO EXTEND MINIMUM 4" ABOVE CEILING
- GYP BOARD PARTITION ABOVE READY ROOM CEILING. WALL IS ATTACHED TO CONCRETE SLAB AND EXTENDS TO DECK. RE: MECH EQUIPMENT SPACE PLAN
- EXTERIOR WALL STUDS TO EXTEND TO STRUCTURE
- GYPSUM BOARD CEILING
- 12" x 12" CEILING ACCESS PANEL

NOTES

1. CEILING IN JAN 111 TO BE 5/8" GYP BOARD SUPPORTED BY 3 5/8" 16 GAGE STL STUDS @ 12" OC, TOPPED BY 3/4" PLYWOOD. REFER TO SPECIFICATION SECTION 09260 FOR GYP BOARD EDGE FINISH. EWH LOCATED ABOVE JAN 111 CEILING. REFER TO DWG M02 FOR EWH MOUNTING DETAIL.

REFLECTED CEILING PLAN

SCALE: 1/4"=1'-0"

BUILDING NORTH

0 2' 4' 8' 12'
SCALE: 1/4"=1'-0"

NO.	DATE	PREPARED BY	CHECKED BY	RM APPROVED	ACOR/COTR APPROVED	DESCRIPTION OF REVISION
1	10/9/95	JAD	HWJ	ERP/RRW	FGR/JTS	REVISED PER AS-BUILT CONDITIONS

WFO / NEXRAD PROGRAM
PROJECT NO. 1001

PROGRAM MANAGEMENT SERVICES CONTRACTOR
FLUOR DANIEL
GOULD EVANS ARCHITECTS, P.A.
KANSAS CITY, MO. U.S.A.

SAFETY SHOULD ALWAYS BE FIRST WITH EVERY TASK YOU DO

DRAWN M.KAUFFMAN
CHECKED MCK
SUP'V. ENGR. HWJ
ENGR/PROJ. MGR. BLR/RRW
ACOR/COTR ERM/JTS

SPECIAL ENGINEERING PROGRAM OFFICE (SEPO)

WEATHER FORECAST OFFICE
GREENVILLE/SPARTANBURG, SC

REFLECTED CEILING PLAN

SIZE	DWG. NO.	CLIN.	REV.
044131– 5	A06	10	1

FDSP0043 KCOA051 JAD 10/02/95@09:31

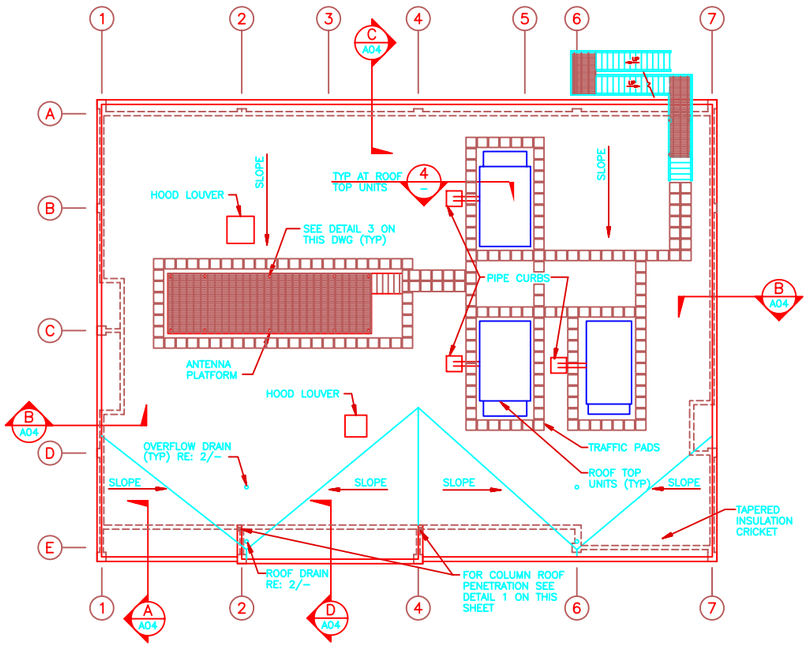

ROOF PLAN
SCALE: 1/8"=1'-0"

BUILDING NORTH

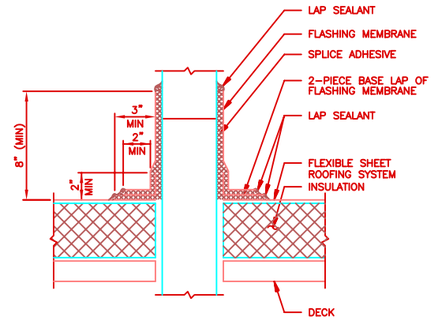

FLASHING AT TUBE
DETAIL 1
SCALE: 3"=1'-0"

NOTES:
1. FOR STL TUBING WITH ANY DIMENSION GREATER THAN 4" TUBE MUST BE FLASHED AS A CURB.

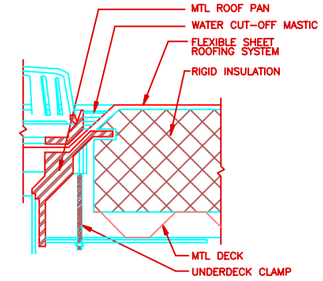

ROOF DRAIN
DETAIL 2
SCALE: NONE

NOTE: ALL BOLTS OR CLAMPS MUST BE IN PLACE TO PROVIDE CONSTANT COMPRESSION ON WATER CUT-OFF MASTIC.

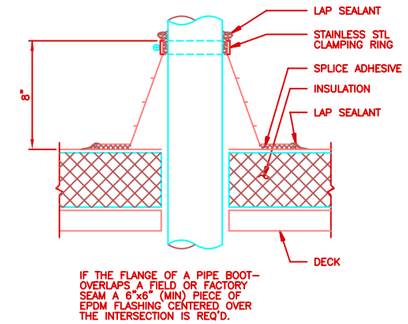

FLASHING AT PIPE COLUMN
DETAIL 3
SCALE: 3"=1'-0"

NOTES:
1. FLANGE OF PIPE BOOT MUST BE LEVEL.
2. DO NOT OVERLAP PIPE BOOT FLANGES.
3. DO NOT CUT AND PATCH PIPE BOOTS.
4. DO NOT USE PIPE BOOTS FOR CLUSTERS OF PIPES.

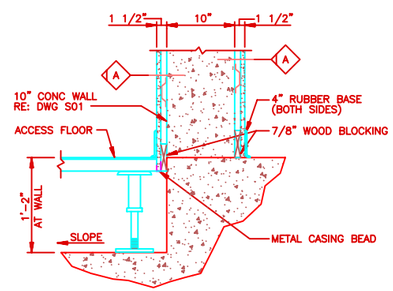

DETAIL 5
SCALE: 1 1/2"=1'-0"
A02

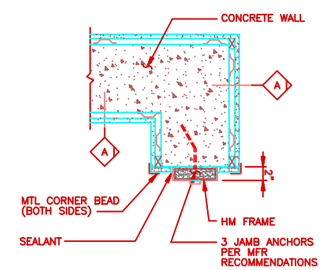

DETAIL 6
SCALE: 1 1/2"=1'-0"
A02

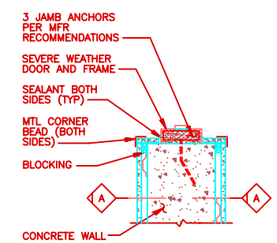

DETAIL 7
SCALE: 1 1/2"=1'-0"
A02

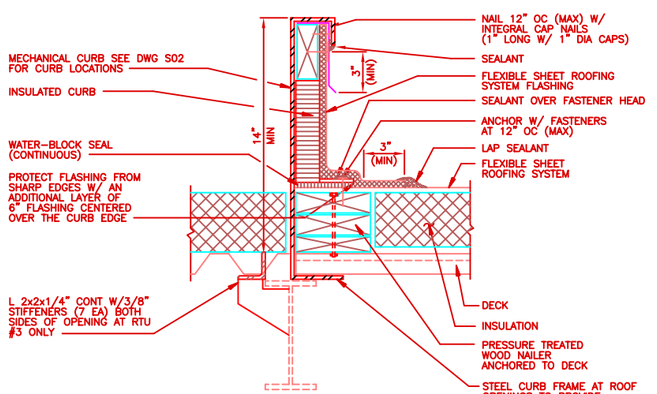

DETAIL 4
SCALE: 3"=1'-0"

NOTES:
1. COUNTERFLASH PRIOR TO SETTING UNIT.
2. ALL ANCHORS THAT PENETRATE THE METAL DECK MUST HAVE NEOPRENE WASHERS AND BE SUBSEQUENTLY CAULKED WITH HIGH GRADE CAULK.

0 3" 6" 1'-0"
SCALE: 3"=1'-0"

0 4' 8' 16' 24'
SCALE: 1/8"=1'-0"

0 6" 1' 2'
SCALE: 1 1/2"=1'-0"

NO.	DATE	PREPARED BY	CHECKED BY	PM APPROVED	ACTR/CCTR APPROVED	DESCRIPTION OF REVISION
1	10/9/95	JAD	HWJ	ERP/RRW	FGR/JTS	REVISED PER AS-BUILT CONDITIONS

WFO / NEXRAD PROGRAM
PROJECT NO. 1001

PROGRAM MANAGEMENT SERVICES CONTRACTOR
FLUOR DANIEL
GOULD EVANS ARCHITECTS, P.A.
KANSAS CITY, MO. U.S.A.

SAFETY SHOULD ALWAYS BE FIRST WITH EVERY TASK YOU DO

DIVISION M.KAUFFMAN
CHECKED MCK
SUP'V. ENGR. HWJ
ENGR/PROJ. MGR. BLR/RRW
ACCPL/CCTR. EHM/JTS

SPECIAL ENGINEERING PROGRAM OFFICE (SEPO)

WEATHER FORECAST OFFICE
GREENVILLE/SPARTANBURG, SC

ROOF PLAN AND DETAILS

SIZE	DWG. NO.	CLIN.	REV.
5	A07	10	1

044131-

FDSP0043 KCOA071 JAD 10/02/95@11:19

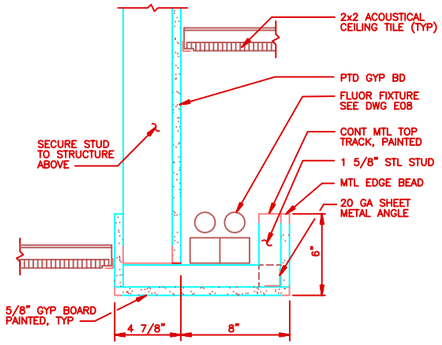

COVE LIGHT

SECTION 1 / A06
SCALE: 3"=1'-0"

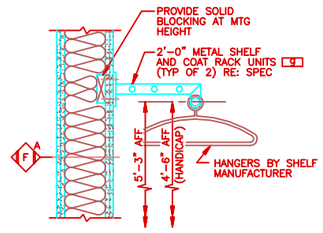

SHELF & COAT ROD

SECTION 2 / A02
SCALE: 1 1/2"=1'-0"

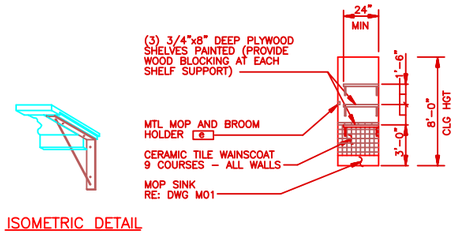

ISOMETRIC DETAIL

JANITOR #111

ELEVATION 3 / A09
SCALE: 1/4"=1'-0"

NOTE: EWH LOCATED ABOVE CEILING OF JANITOR'S CLOSET. REFER TO DRAWING M02.

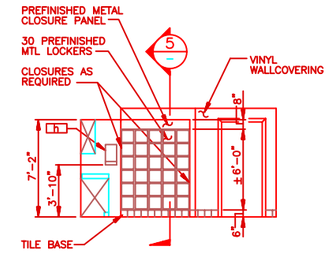

READY ROOM #108

ELEVATION 4 / A02
SCALE: 1/4"=1'-0"

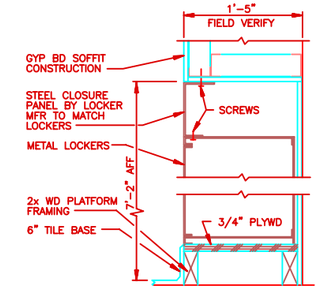

LOCKER HEAD/BASE

SECTION 5 / –
SCALE: 1 1/2"=1'-0"

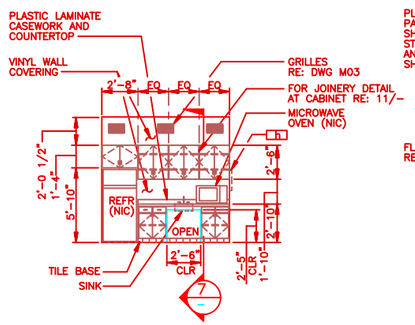

READY ROOM #108

ELEVATION 6 / A02
SCALE: 1/4"=1'-0"

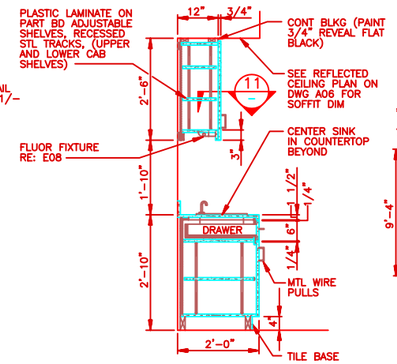

CABINETRY

SECTION 7 / –
SCALE: 3/4"=1'-0"

NOTE: INSULATE ALL EXPOSED PIPES. 3/4" PART BD W/ PLASTIC LAMINATE FINISH FOR ALL BASE AND UPPER CABINETS, BACKSPLASH AND COUNTERTOP.

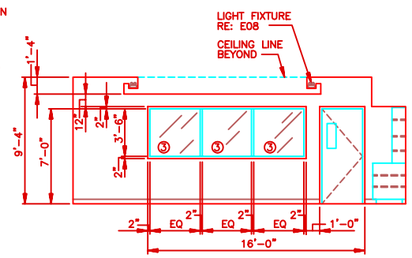

MULTI-PURPOSE ROOM #107

ELEVATION 8 / A02
SCALE: 1/4"=1'-0"

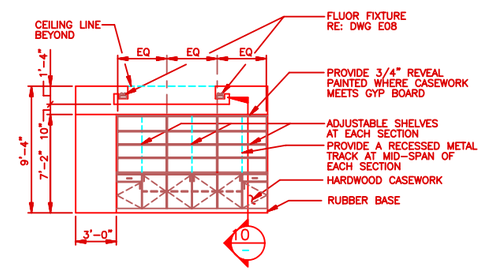

MULTI-PURPOSE #107

ELEVATION 9 / A02
SCALE: 1/4"=1'-0"

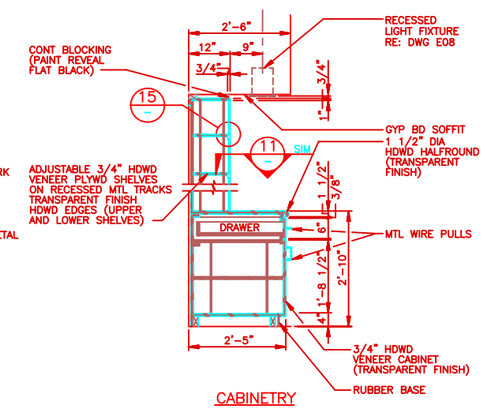

CABINETRY

SECTION 10 / –
SCALE: 3/4"=1'-0"

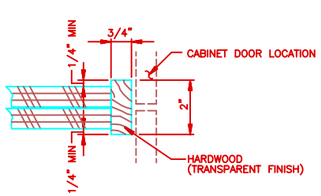

SECTION 11 / –
SCALE: NONE

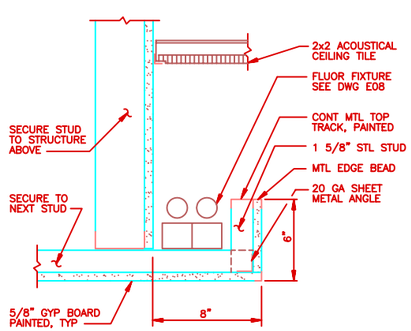

COVE LIGHT

SECTION 12 / A06
SCALE: 3"=1'-0"

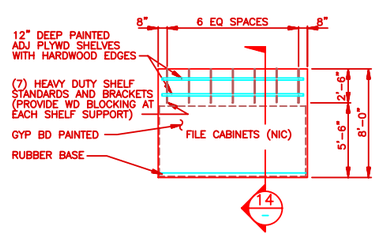

FILE/COPY #105

ELEVATION 13 / A02
SCALE: 1/4"=1'-0"

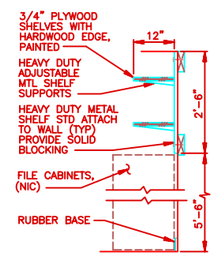

SHELVES

SECTION 14 / –
SCALE: 3/4"=1'-0"

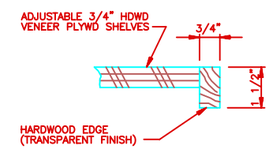

HDWD SHELF EDGE

DETAIL 15 / –
SCALE: NONE

GLASS TYPES

③ 1/4" CLEAR GLASS

ACCESSORIES

- [e] MOP AND BROOM HOLDER
- [g] COAT ROD AND SHELF
- [h] TOWEL DISPENSER

0 2' 4' 8' 12'
SCALE: 1/4"=1'-0"

0 1' 2' 3' 4'
SCALE: 3/4"=1'-0"

0 6" 1' 2'
SCALE: 1 1/2"=1'-0"

0 3" 6" 1'-0"
SCALE: 3"=1'-0"

NO.	DATE	PREPARED BY	CHECKED BY	RSI APPROVED	ACOR/COR APPROVED	DESCRIPTION OF REVISION
1	10/9/95	JAD	HWJ	ERP/RRW	FGR/JTS	REVISED PER AS-BUILT CONDITIONS

WFO / NEXRAD PROGRAM
PROJECT NO. 1001

PROGRAM MANAGEMENT SERVICES CONTRACTOR
FLUOR DANIEL
GOULD EVANS ARCHITECTS, P.A.
KANSAS CITY, MO. U.S.A.

SAFETY SHOULD ALWAYS BE FIRST WITH EVERY TASK YOU DO

SEPO

DRAWN: M.KAUFFMAN
CHECKED: MCK
SUPV. ENGR.: HWJ
ENGR/PROJ. MGR.: BLR/RRW
ACOR/COR: ERM/JTS

SPECIAL ENGINEERING PROGRAM OFFICE (SEPO)

WEATHER FORECAST OFFICE
GREENVILLE/SPARTANBURG, SC

INTERIOR ELEVATIONS AND DETAILS SHEET 1 OF 2

044131-	5	A08	10	1
	SIZE	DWG. NO.	CLIN.	REV.

F03P0043 KC0A081 JAD 10/02/95@12:08

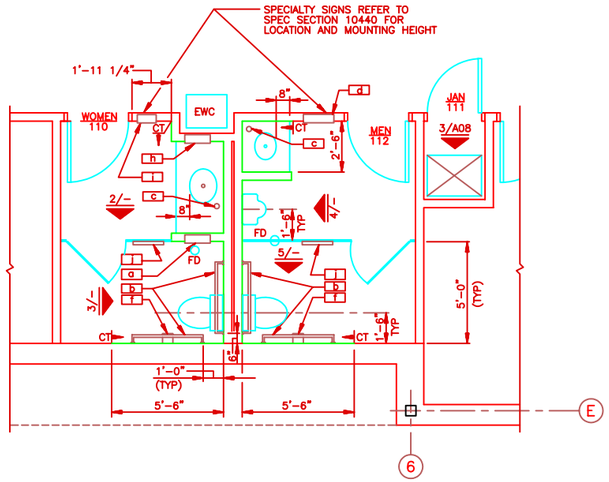

TOILET ROOM PLAN

DETAIL 1 / A02

SCALE: 3/8"=1'-0"

NOTE:
1. TOILET PARTITION CONTRACTOR IS TO COORDINATE LOCATION OF PARTITIONS WITH THE FLOOR DRAINS.
2. ELECTRIC WATER HEATER IS LOCATED ABOVE CEILING OF JANITOR'S CLOSET REFER TO DRAWING M02.

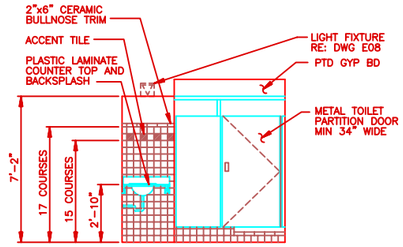

WOMEN #110

ELEVATION 2 /–

SCALE: 3/8"=1'-0"

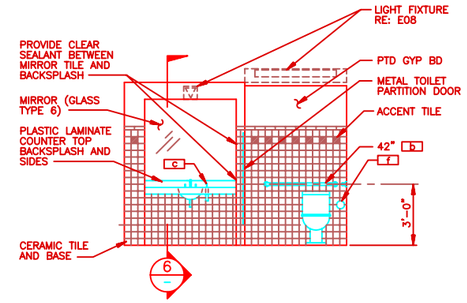

WOMEN #110

ELEVATION 3 /–

SCALE: 3/8"=1'-0"

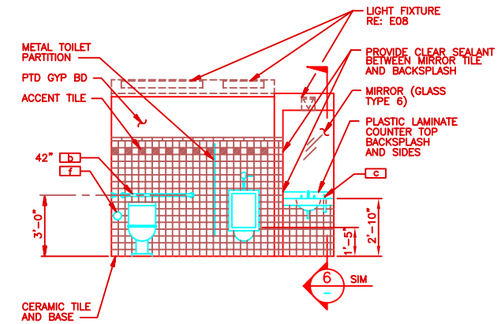

MEN #112

ELEVATION 4 /–

SCALE: 3/8"=1'-0"

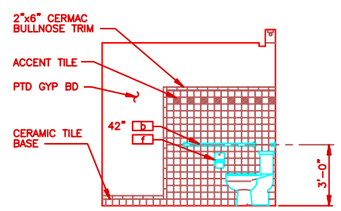

MEN #112

ELEVATION 5 /–

SCALE: 3/8"=1'-0"

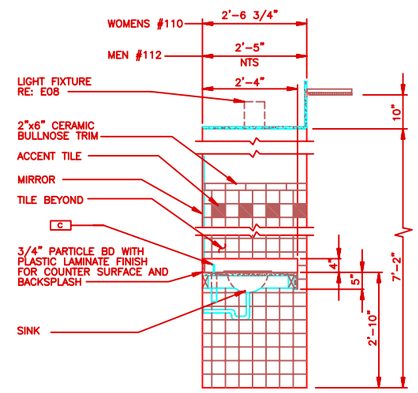

LAVATORY

SECTION 6 /–

SCALE: 3/4"=1'-0"

NOTE: INSULATE ALL EXPOSED PIPES

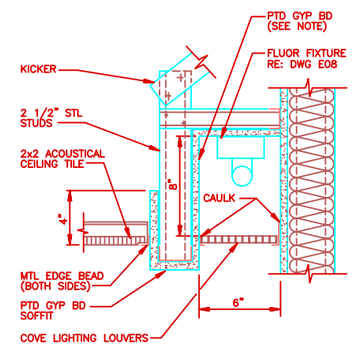

COVE LIGHT

SECTION 7 / A06

SCALE: 3"=1'-0"

NOTE: PAINT THE INTERIOR GYP BD OF COVE THE SAME COLOR AS SOFFIT.

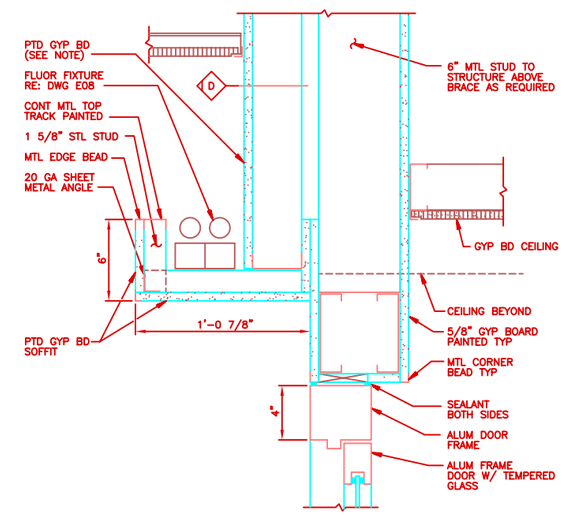

COVE LIGHT/HEAD

(SEE DOOR SCHEDULE A10)

DETAIL 8 / A06

SCALE: 3"=1'-0"

NOTE: PAINT THE INTERIOR GYP BD OF COVE THE SAME COLOR AS SOFFIT.

GLASS TYPES

⑥ 1/4" CLEAR FLOAT MIRROR GLASS

ACCESSORIES

- a SANITARY NAPKIN/TAMPON VENDOR AND DISPOSAL UNIT (MOUNT TO OF UNIT AT 4'-9" AFF)
- b GRAB BARS
- c SOAP DISPENSERS
- d COMBINATION TOWEL DISPENSER/WASTE RECEPTACLE (MOUNT TOP OF UNIT AT 5'-0 1/2" AFF)
- f TOILET TISSUE DISPENSER
- h TOWEL DISPENSER – RECESSED (MOUNT TOP OF UNIT AT 5'-0 1/2" AFF)
- WASTE RECEPTACLE (MOUNT TOP OF UNIT AT 3'-2" AFF)
- TOILET SEAT COVER DISPENSER (MOUNT TOP OF UNIT AT 3'-8 1/2" AFF)

0 2' 4' 6' 8'
SCALE: 3/8"=1'-0"

0 1' 2' 3' 4'
SCALE: 3/4"=1'-0"

0 3" 6" 1'-0"
SCALE: 3"=1'-0"

NO.	DATE	PREPARED BY	CHECKED BY	RES APPROVED	ACOS/CODR APPROVED	DESCRIPTION OF REVISION
1	10/9/95	JAD	HWJ	ERP/RRW	FGR/JTS	REVISED PER AS-BUILT CONDITIONS

WFO / NEXRAD PROGRAM
PROJECT NO. 1001

PROGRAM MANAGEMENT SERVICES CONTRACTOR
FLUOR DANIEL
GOULD EVANS ARCHITECTS, P.A.
KANSAS CITY, MO. U.S.A.

SAFETY SHOULD ALWAYS BE FIRST WITH EVERY TASK YOU DO

DRAWN: M.KAUFFMAN
CHECKED: MCK
SUPV. ENGR: HWJ
ENGR/PROJ. MGR: BLR/RRW
ACOS/CODR: EHM/JTS

SPECIAL ENGINEERING PROGRAM OFFICE (SEPO)

WEATHER FORECAST OFFICE
GREENVILLE/SPARTANBURG,SC

INTERIOR ELEVATIONS AND DETAILS SHEET 2 OF 2

SIZE	DWG. NO.	CLIN.	REV.
044131– 5	A09	10	1

FDSP0043 KCDA091 JAD 10/02/95@12:11

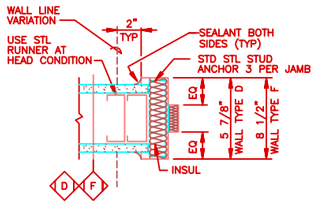

HEAD/JAMB #3
(SEE DOOR SCHEDULE THIS DWG)
DETAIL 3 / A02
SCALE: 3"=1'-0"

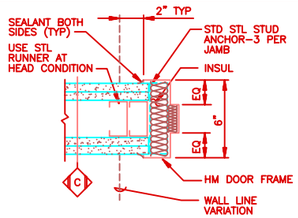

HEAD/JAMB #4
(SEE DOOR SCHEDULE THIS DWG)
DETAIL 4 / A02
SCALE: 3"=1'-0"

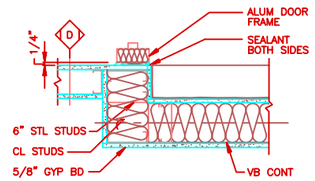

JAMB #5 AT SERV VEST
(SEE DOOR SCHEDULE THIS DWG)
DETAIL 5 / A02
SCALE: 1 1/2"=1'-0"

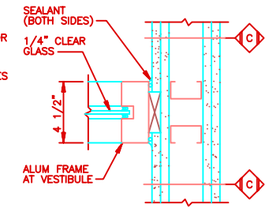

DETAIL 6 / A02
SCALE: 3"=1'-0"

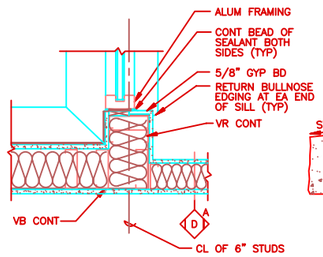

DETAIL 7 / A02
SCALE: 1 1/2"=1'-0"

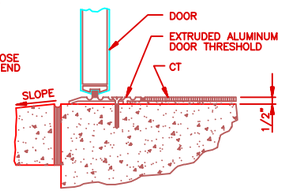

SILL #8
(SEE DOOR SCHEDULE THIS DWG)
DETAIL 8 / A04
SCALE: 3"=1'-0"

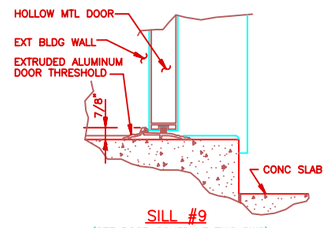

SILL #9
(SEE DOOR SCHEDULE THIS DWG)
SECTION 9 / A02
SCALE: 3"=1'-0"

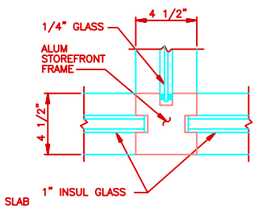

DETAIL 10 / A02
SCALE: 3"=1'-0"

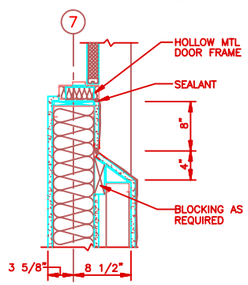

JAMB #11
(SEE DOOR SCHEDULE THIS DWG)
DETAIL 11 / A02
SCALE: 1 1/2"=1'-0"

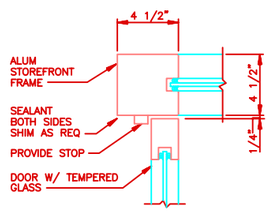

JAMB #12
(SEE DOOR SCHEDULE THIS DWG)
DETAIL 12 / A02
SCALE: 3"=1'-0"

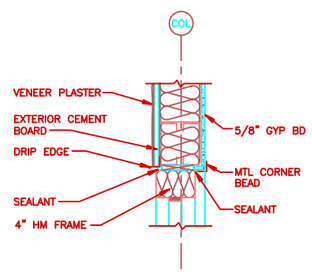

HEAD #13
(SEE DOOR SCHEDULE THIS DWG)
DETAIL 13 / –
SCALE: 1 1/2"=1'-0"

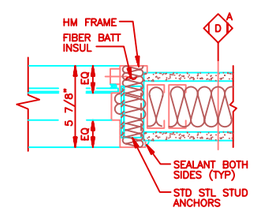

DETAIL 14 / A02
SCALE: 3"=1'-0"

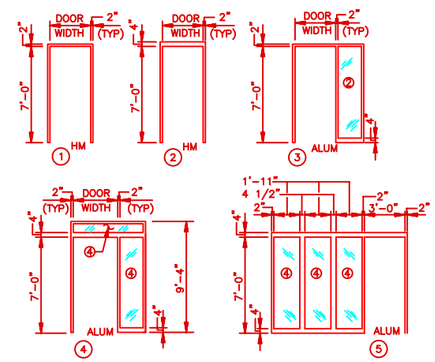

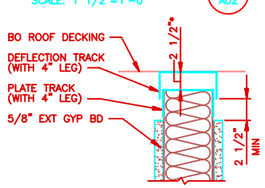

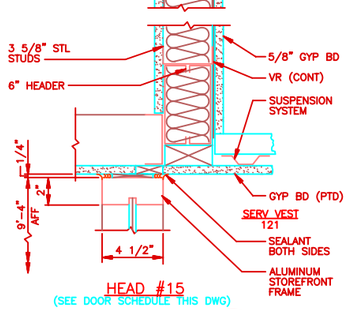

HEAD #15
(SEE DOOR SCHEDULE THIS DWG)
SECTION 15 / A06
SCALE: 3"=1'-0"

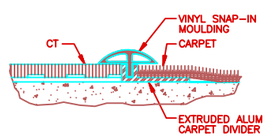

CARPET/TILE DIVIDER #16A
(SEE DOOR SCHEDULE THIS DWG)
SECTION 16A / A02
SCALE: NONE

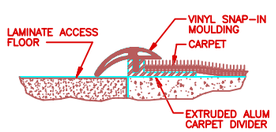

CARPET/LAMINATE DIVIDER #16B
(SEE DOOR SCHEDULE THIS DWG)
SECTION 16B / A02
SCALE: NONE

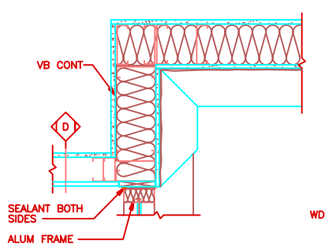

DETAIL 17 / A02
SCALE: 1 1/2"=1'-0"

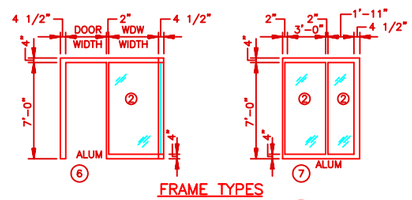

FRAME TYPES
ELEVATION 1 / –
SCALE: NONE

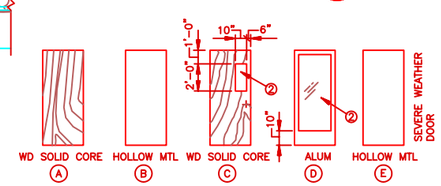

DOOR TYPES
ELEVATION 2 / –
SCALE: NONE

0 6" 1' 2'
SCALE: 1 1/2"=1'-0"

0 3" 6" 1'-0"
SCALE: 3"=1'-0"

DOOR SCHEDULE

MARK	DOOR		FRAME	DETAILS				REMARKS
DOOR NUMBER	TYPE	SIZE	TYPE	HEAD	JAMB	JAMB	SILL	
101/1	D	3'x7'	5	3/A04	11/A10 SIM	11/A10 SIM	8/A10	
101/2	D	3'x7'	6/7	8/A09	12/A10 SIM	12/A10	16A/A10	
104/1	A	3'x7'	1	3/A10	3/A10	3/A10	---	
105/1	A	3'x7'	1	3/A10	3/A10	3/A10	---	
107/1	C	3'x7'	1	3/A10	3/A10	3/A10	---	
107/2	C	3'x7'	1	3/A10	3/A10	3/A10	16B/A10	
108/1	E	3'x7'	1	7/A07	7/A07	8/A07	16A/A10	
110/1	A	3'x7'	1	3/A10	3/A10	3/A10	16A/A10	
111/1	A	2'-8"x7'	1	3/A10	3/A10	3/A10	16B/A10 SIM	UNDERCUT 1"
112/1	A	3'x7'	1	3/A10	3/A10	3/A10	16A/A10	INSULATED
113/1	C	3'x7'	1	4/A10	4/A10	4/A10	16B/A10	
114/1	C	3'-6"x7'	1	4/A10	4/A10	4/A10	---	
115/1	B	3'x7'	1	3/A10	3/A10	3/A10	---	
116/1	A	3'x7'	1	3/A10	3/A10	3/A10	---	
117/1	B	3'-8"x7'	2	13/A10	11/A10	11/A10	9/A10	INSULATED DOOR
117/2	B	3'-6"x7'	1	3/A10	3/A10	3/A10	---	
118/1	B	3'x7'	2	13/A10	11/A10	11/A10	9/A10	PAIR INSULATED
119/1	C	3'x7'	1	4/A10	4/A10	4/A10	---	
119/2	C	3'x7'	1	3/A10	3/A10	3/A10	---	
120/1	A	3'x7'	1	3/A10	3/A10	3/A10	16B/A10 SIM	
120A/1	B	3'x7'	2	13/A10	11/A10	11/A10	9/A10	INSULATED DOOR
121/1	D	3'x7'	4	15/A10	5/A10	9/A07	8/A10	
121/2	D	3'x7'	3	–	6/A10 SIM	6/A10 SIM	16A/A10	
122/1	A	1'-6"x7'	1	4/A10	4/A10	4/A10 SIM	---	PAIR
125/1	A	3'x7'	1	4/A10	4/A10	4/A10	---	

FINISH SCHEDULE

MARK	ROOM TITLE	FINISHES								REMARKS
				WALLS						
ROOM NUMBER		FLOOR	BASE	NORTH	WEST	SOUTH	EAST	CEILING	CEILING HEIGHT	
101	VESTIBULE	I	4	F	B/F	F	B	2	8'-4"	SEE NOTE 4
102	WAITING	B	1	B	---	F	B	1	8'-0"	
103	RECEPTION	B	1	B	B/E	----	B	1/3	---	SEE NOTE 5
104	MIC OFFICE	B/D	1	B	B	B	B	1	8'-0"	SEE NOTE 4
105	FILE/COPY	B	1	B	B	B	B	1	8'-0"	
106	CORRIDOR	B	1	B	B	B	----	1	8'-0"	
106A	CORRIDOR	B	1	----	B	----	B	2	7'-10"	
107	MULTI-PURPOSE	B/C	1	D/F	D	D/F	D	1/2	---	SEE NOTE 4, 5 & 6
108	READY ROOM	H	4	D	D	D	D	2	9'-2 1/2"	
109	OPERATIONS	A/F	1	E	B	B/F	E	1	9'-0"	SEE NOTE 2
110	WOMEN	G	3	B	B	A/B	A/B	1/3	8'-0"	SEE NOTE 1 & 5
111	JAN CLOSET	F	1	B	B	A/B	B	0	8'-0"	
112	MEN	G	3	A/B	A/B	A/B	B	1/3	8'-0"	SEE NOTE 1 & 5
113	NWR	B	1	E	E	E	E	1	8'-0"	
114	EQUIPMENT	A/F	1	B	B	B	B	1	9'-0"	SEE NOTE 2
115	COMM RM	A/F	1	C	C	C	C	0	---	SEE NOTE 2
116	OFFICE	B/D	1	B	B	B	B	1	8'-0"	SEE NOTE 4
117	ELECTRICAL	F	1	B	B	B	B	0	---	
118	GENERATOR	F	1	B	B	B	B	0	VARIES	
119	ELEC TECH	E	1	B	B	B	B	1	9'-0"	SEE NOTE 5 & 6
120	STORAGE	F	1	B	B	B	B	0	---	
120A	STORAGE	F	1	B	B	B	B	0	VARIES	
121	SERV VEST	I	4	B	F	B	F	2	9'-4"	SEE NOTE 4
122	COATS	B	1	B	B	B	B	3	8'-0"	
125	MECHANICAL	F	----	B	B	B	B	0	---	

DOOR SCHEDULE NOTES

1. ALL DOORS TO BE 1 3/4" THICK UNLESS NOTED OTHERWISE.
2. REFER TO SPECS FOR HARDWARE SCHEDULE.
3. ALL LATCH AND LOCKSETS TO BE LEVER OPERATED.

GLASS SCHEDULE

② 1/4" CLEAR TEMPERED GLASS
④ 1" CLEAR TEMPERED INSULATING GLASS

REMARKS

NOTE 1. WALLS NOTED TO RECEIVE BOTH "A" & "B" WALL FINISHES SHALL HAVE A CERAMIC TILE WAINSCOT 17 COURSE HIGH PLUS A BULLNOSE CAP.

NOTE 2. PROVIDE CONCRETE SEALER BELOW ALL ACCESS FLOORS INCLUDING PERIMETER CONCRETE WALLS.

NOTE 3. SEE REFLECTED CEILING PLAN FOR WALLS WHICH EXTEND TO BOTTOM OF DECK ABOVE.

NOTE 4. SEE CARPET FLOOR PLAN IN SPECIFICATION.

NOTE 5. SEE REFLECTED CEILING PLAN FOR DETAILED VARIATIONS IN CEILING HEIGHTS.

NOTE 6. WALL FINISHED AT ALCOVES TO BE SAME AS ADJACENT WALL.

FINISH KEY

FLOOR		BASE		WALLS		CEILING	
A	PLASTIC LAM*	0	NO BASE	A	CERAMIC TILE FIELD & ACCENT	0	EXPOSED STRUCTURE PAINTED
B	CARPET – FIELD	1	RUBBER – 4"	B	GYP BD PTD	1	2x2 ACCOUSTICAL CEILING PANEL
C	CARPET ACCENT #1	2	NOT USED	C	PAINTED PLYWOOD	2	GYP BD W/ SKIM COAT PTD
D	CARPET ACCENT #2	3	CERAMIC TILE #1	D	VINYL WALL COVERING	3	GYP BD – PAINTED
E	VINYL COMP TILE	4	CER PAVER TILE #2	E	ACST FABRIC		
F	SEALED CONC			F	GLASS AND METAL FRAME		
G	CER FLOOR TILE #1						
H	CER PAVER TILE #2						
I	"H" BORDER W/ RECESSED ENTRY MAT						

REFER TO SPEC ATTACHMENT "B" FOR COLORS AND PAINT SCHEDULES.
* PLASTIC LAMINATE TO BE BY ACCESS FLOOR MANUFACTURER

NO.	DATE	PREPARED BY	CHECKED BY	KS APPROVED	ACOR/COR APPROVED	DESCRIPTION OF REVISION
1	10/9/95	JAD	HWJ	ERP/RRW	FGR/JTS	REVISED PER AS-BUILT CONDITIONS

WFO / NEXRAD PROGRAM
PROJECT NO. 1001

PROGRAM MANAGEMENT SERVICES CONTRACTOR
FLUOR DANIEL
GOULD EVANS ARCHITECTS, P.A.
KANSAS CITY, MO. U.S.A.

SAFETY SHOULD ALWAYS BE FIRST WITH EVERY TASK YOU DO

DRAWN: M.KAUFFMAN
CHECKED: MCK
SUPV. ENGR.: HWJ
ENGR/PROJ. MGR.: BLR/RRW
ACOR/COR: EWJ/JTS

SPECIAL ENGINEERING PROGRAM OFFICE (SEPO)

WEATHER FORECAST OFFICE
GREENVILLE/SPARTANBURG, SC

SCHEDULES

044131–	SIZE 5	DWG. NO. A10	CLIN. 10	REV. 1

*NOTE: DIMENSION AFTER DEAD LOAD IS APPLIED

FDSF00A3 KC0A101 JAD 10/02/95@12:15

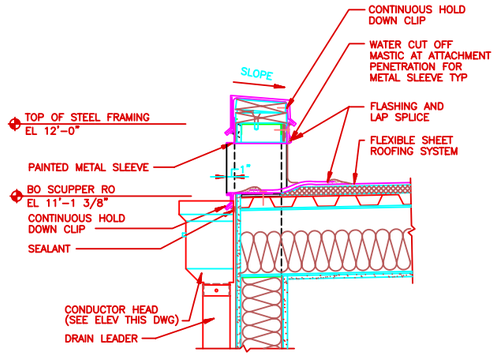

DETAIL 1
SCALE: 1 1/2"=1'-0"

NOTES:
1. SEE STRUCTURAL DWGS FOR TYPICAL JOIST ATTACHMENT DETAILS.
2. SEE DETAIL 2 FOR ADDITIONAL NOTES.

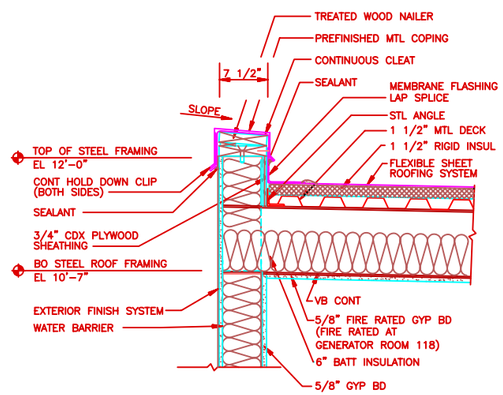

DETAIL 2
SCALE: 1 1/2"=1'-0"

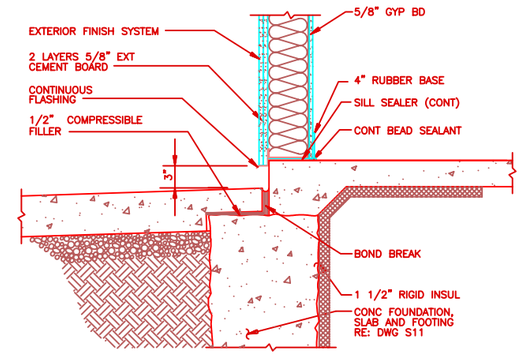

DETAIL 3
SCALE: 1 1/2"=1'-0"

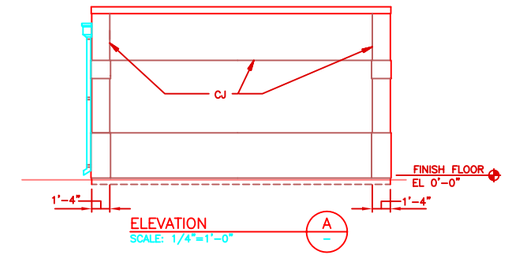

ELEVATION A
SCALE: 1/4"=1'-0"

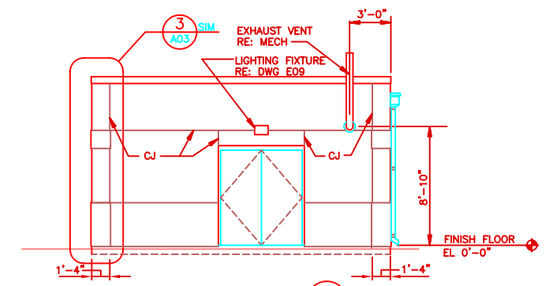

ELEVATION B
SCALE: 1/4"=1'-0"

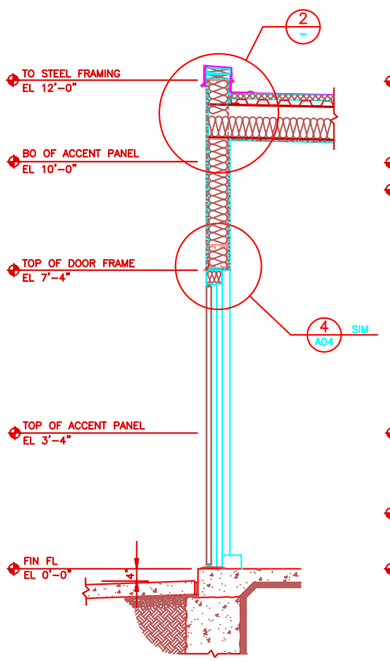

SECTION E
SCALE: 3/4"=1'-0"

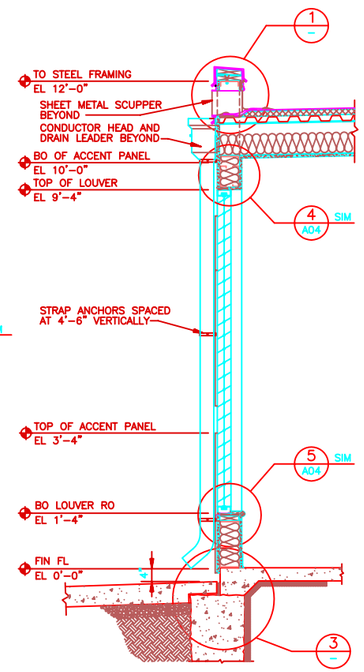

SECTION F
SCALE: 3/4"=1'-0"

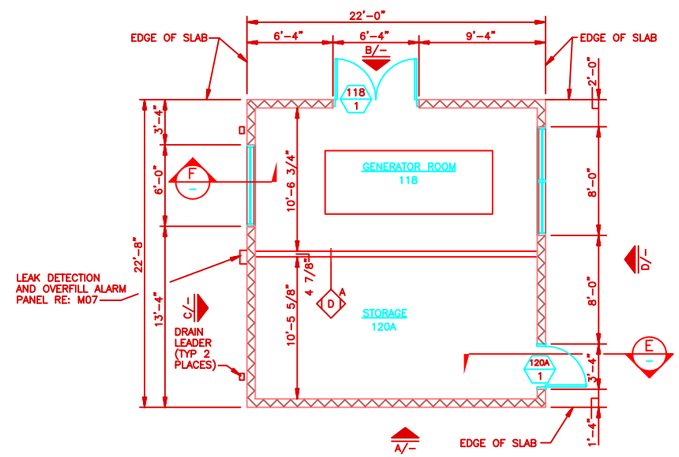

FLOOR PLAN
SCALE: 1/4"=1'-0"

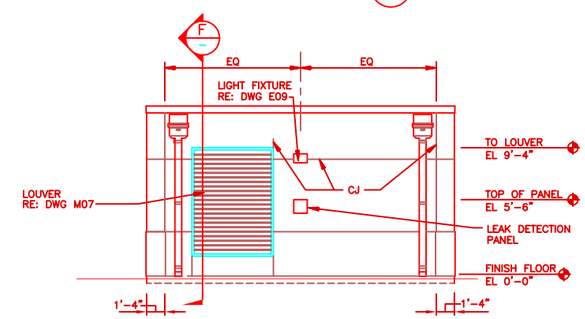

ELEVATION C
SCALE: 1/4"=1'-0"

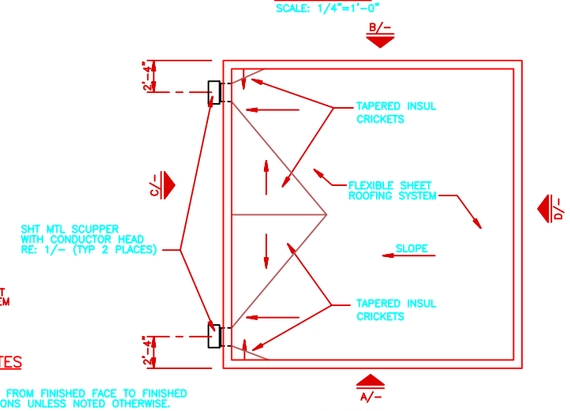

ROOF PLAN
SCALE: 1/4"=1'-0"

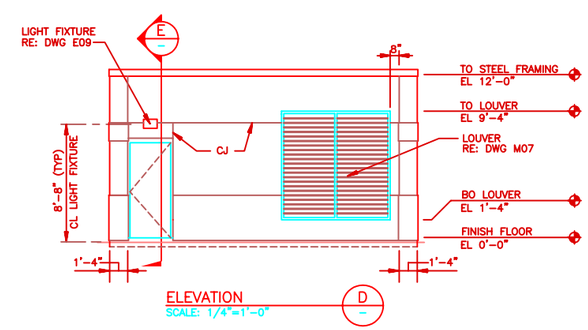

ELEVATION D
SCALE: 1/4"=1'-0"

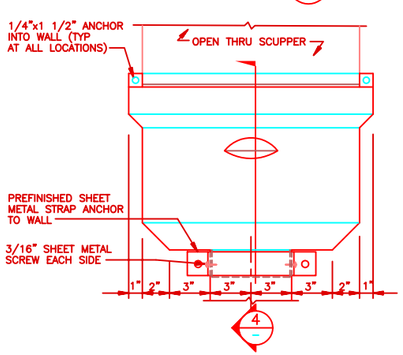

TYP ELEVATION OF CONDUCTOR HEAD
SCALE: 3" = 1'-0"

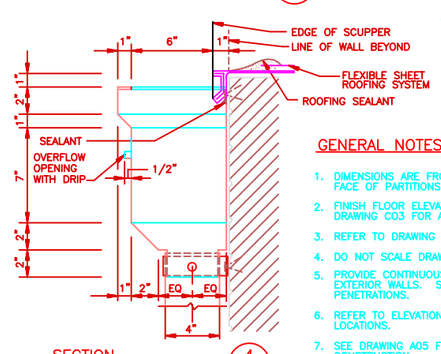

SECTION 4
SCALE: 3" = 1'-0"

GENERAL NOTES

1. DIMENSIONS ARE FROM FINISHED FACE TO FINISHED FACE OF PARTITIONS UNLESS NOTED OTHERWISE.
2. FINISH FLOOR ELEVATION = 0'-0". REFER TO DRAWING C03 FOR ACTUAL ELEVATIONS.
3. REFER TO DRAWING C06 FOR SIDEWALK LOCATIONS.
4. DO NOT SCALE DRAWINGS.
5. PROVIDE CONTINUOUS VAPOR BARRIER AT ALL EXTERIOR WALLS. SEAL AT ALL EDGES AND PENETRATIONS.
6. REFER TO ELEVATIONS FOR CONTROL JOINT LOCATIONS.
7. SEE DRAWING A05 FOR TYPICAL EXTERIOR WALL CONSTRUCTION.
8. REFER TO DRAWING C06 EQUIPMENT PAD PLAN FOR BUILDING ORIENTATION.

0 2' 4' 8' 12'
SCALE: 1/4"=1'-0"
0 1' 2' 3' 4'
SCALE: 3/4"=1'-0"
0 6" 1' 2'
SCALE: 1 1/2"=1'-0"
0 3" 6" 1'-0"
SCALE: 3"=1'-0"

NO.	DATE	PREPARED BY	CHECKED BY	ERP APPROVED	AGL/GJTS APPROVED	DESCRIPTION OF REVISION
1	10/9/95	JAD	HWJ	ERP/RRW	FGR/JTS	REVISED PER AS-BUILT CONDITIONS

WFO / NEXRAD PROGRAM
PROJECT NO. 1001

PROGRAM MANAGEMENT SERVICES CONTRACTOR
FLUOR DANIEL
GOULD EVANS ARCHITECTS, P.A.
KANSAS CITY, MO. U.S.A.

SAFETY SHOULD ALWAYS BE FIRST WITH EVERY TASK YOU DO

SEPO

DRAWN: M.KAUFFMAN
CHECKED: MCK
SUPV. ENGR.: HWJ
ENGR/PROJ. MGR.: BLR/RRW
ACCTS./CORR.: EHN/JTS

SPECIAL ENGINEERING PROGRAM OFFICE (SEPO)
WEATHER FORECAST OFFICE
GREENVILLE/SPARTANBURG, SC

DDG/STORAGE BUILDING
PLAN, ELEVS AND DETAILS

044131– | SIZE 5 | DWG. NO. A11 | CLIN. 10 | REV. 1

FDSP0043 KCOA111 JAD 10/02/95@12:19

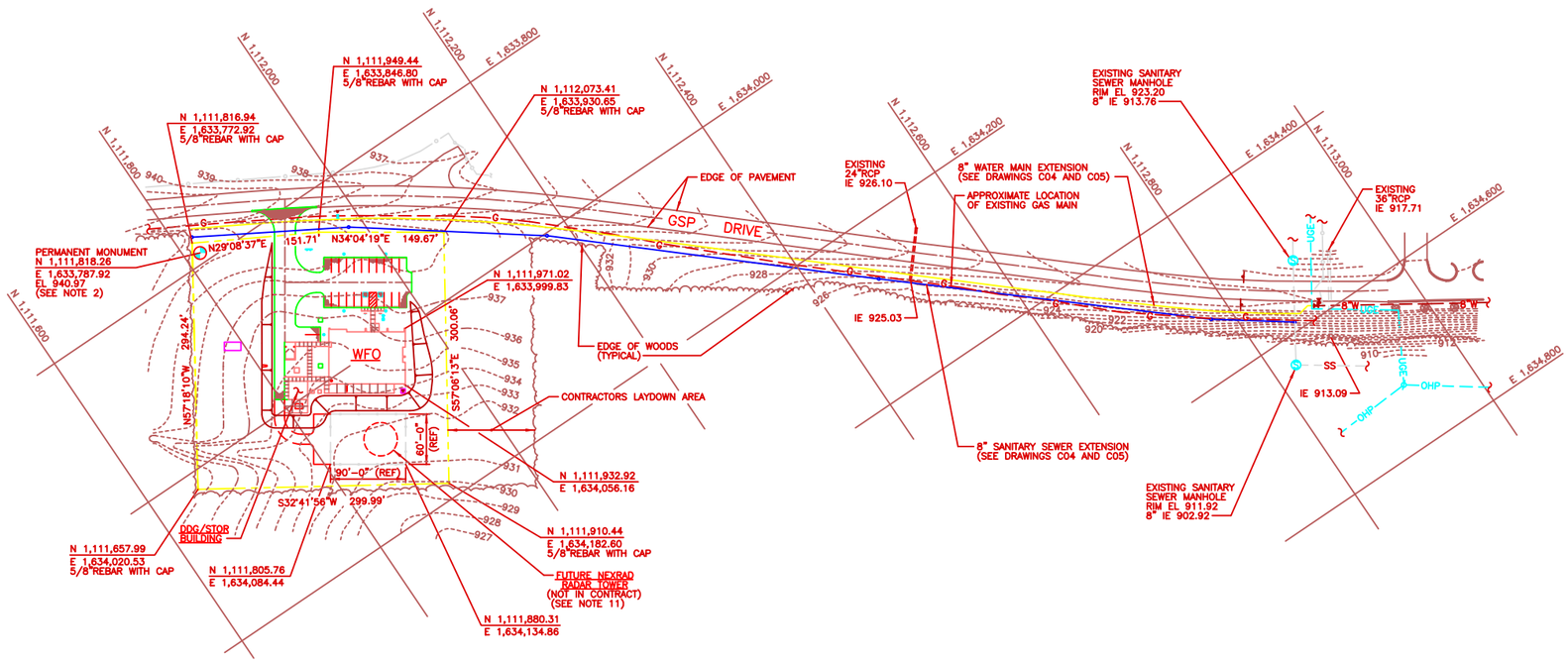

OVERALL SITE PLAN
SCALE 1"=60'

GRID NORTH

BLDG NORTH

GENERAL NOTES

1. FOR DRAWING LIST, SYMBOLS, AND ABBREVIATIONS SEE DWG I01.
2. BEARING SYSTEM AND PERMANENT MONUMENT COORDINATES SHOWN ARE BASED ON THE SOUTH CAROLINA STATE PLANE COORDINATE SYSTEM (NAD 83). OTHER COORDINATES DO NOT HAVE GRID FACTOR ADJUSTMENTS. ALL DISTANCES SHOWN ARE GROUND DISTANCES.
3. ELEVATIONS SHOWN ARE BASED ON NATIONAL GEODETIC VERTICAL DATUM OF 1929 (NGVD 29).
4. EXISTING UTILITY, TOPOGRAPHIC AND TREE INFORMATION IS BASED ON A SEPTEMBER 23, 1993 (REVISED OCTOBER 6, 1993) TOPOGRAPHIC SURVEY, PREPARED BY PIEDMONT OLSEN HENSLEY, INC. GREENVILLE, SC.
5. THE CONTRACTOR SHALL VERIFY ALL EXISTING CONDITIONS PRIOR TO CONSTRUCTION AND REPORT ANY DISCREPANCIES WITH THE DRAWINGS TO THE CONTRACT ADMINISTRATOR FOR RESOLUTION.
6. PRIOR TO CONSTRUCTION THE CONTRACTOR SHALL VERIFY THAT THE PERMANENT SITE MONUMENT AND PROPERTY CORNERS ARE LOCATED AS SHOWN ON THE DRAWINGS AND HAVE NOT BEEN DISTURBED. IF ANY DISCREPANCIES ARE FOUND NOTIFY THE CONTRACT ADMINISTRATOR FOR RESOLUTION. ANY MONUMENT OR CORNER BAR THE CONTRACTOR DISTURBS DURING PERFORMANCE OF THE WORK, INCLUDING THOSE DELINEATING THE LIMITS OF THE FUTURE NEXRAD RADAR TOWER AREA SHALL BE RESET, AT THE CONTRACTORS EXPENSE, BY A LAND SURVEYOR REGISTERED IN THE STATE OF SOUTH CAROLINA.
7. CONTRACTOR'S ACCESS TO THE PROPERTY SHALL BE FROM GSP DRIVE ONLY.
8. CONTRACTOR'S PARKING AND LAYDOWN AREAS SHALL BE LIMITED TO THE SPACE AS SHOWN ON THIS DRAWING.
9. THE CONTRACTOR SHALL BE RESPONSIBLE FOR MAINTAINING THE EXISTING STORM DRAINAGE NETWORK OR INSTALLING AN ADEQUATE TEMPORARY SYSTEM UNTIL THE NEW FACILITY HAS BEEN CONSTRUCTED.
10. UNLESS OTHERWISE SHOWN, ALL DIMENSIONS FROM STRUCTURES SHALL BE MEASURED OFF THE FACE OF THE FOUNDATION.
11. THE FUTURE RADAR FOUNDATION PAD, TOWER, FENCE AND ACCESS DRIVE ARE NOT PART OF THIS CONTRACT. THE CONTRACTOR SHALL BE RESPONSIBLE FOR ALL EARTHWORK ACTIVITIES AND CONSTRUCTION FEATURES IN AND AROUND THE FUTURE RADAR SITE.

UTILITY DESIGNATION

2"W — SERVICE IDENTIFICATION; LINE SIZE

LEGEND

- PROPERTY LINE / RIGHT OF WAY
- 930 — EXISTING GRADE CONTOUR
- 930 — FINISH GRADE CONTOUR
- EXISTING FENCE
- EXISTING CHAIN LINK FENCE
- FUTURE FENCE (NOT IN CONTRACT)
- FENCE/TEMPORARY SILT FENCE
- UGE — EXISTING UNDERGROUND ELECTRICAL
- OHP — EXISTING OVERHEAD UTILITY
- 8"W — EXISTING WATER LINE
- 8"SS — EXISTING SANITARY SEWER
- G — EXISTING GAS LINE
- 2 1/2"W — WATER LINE
- 4"SS — SANITARY SEWER
- 12"SD — STORM DRAIN
- DITCH OR SWALE
- RIDGE / VALLEY LINE
- SLOPE
- 930.00 — FINISH GRADE SPOT ELEVATION
- EXISTING FIRE HYDRANT
- FIRE HYDRANT
- EXISTING UTILITY POLE
- UTILITY POLE
- EXISTING LIGHT POLE
- EXISTING GUY WIRE
- EXISTING SIGN
- LIGHT POLE FOUNDATION
- GROUND TEST WELL
- EXISTING VALVE
- VALVE
- TEMPORARY BLOW OFF
- EXISTING MANHOLE
- MANHOLE
- PERMANENT MONUMENT
- FLAGPOLE
- FLAGPOLE LIGHT
- EXISTING CULVERT
- TRENCH DRAIN
- CONCRETE SURFACE
- NEW 3" ASPHALTIC CONCRETE PAVEMENT
- TREE/BRUSH LINE
- EXISTING TREE
- 8+00 — SANITARY SEWER STATIONS
- EMBANKMENT

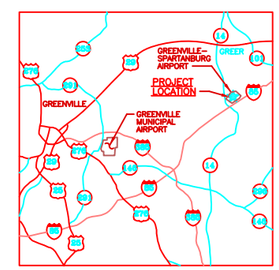

VICINITY MAP
SCALE: NONE

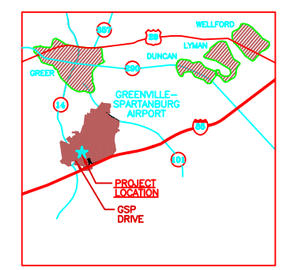

LOCATION MAP
SCALE: NONE

0 30' 60' 120' 180'
SCALE: 1"=60'

NO.	DATE	PREPARED BY	CHECKED BY	PIE APPROVED	ACTS/FCOS APPROVED	DESCRIPTION OF REVISION
1	10/9/95	JAD	JAD	ERP/RRW	FGR/JTS	REVISED PER AS-BUILT CONDITIONS

WFO / NEXRAD PROGRAM
PROJECT NO. K001

PROGRAM MANAGEMENT REVIEWER CONTRACTOR: FLUOR DANIEL GOULD EVANS ARCHITECTS, P.A. KANSAS CITY, MO. U.S.A.

SAFETY SHOULD ALWAYS BE FIRST WITH EVERY TASK YOU DO

DESIGNED C. RAYA; CHECKED PW ARTHERTON; SUPV. ENG. D. LOHE; ENGR/PROJ. MGR. ERP/RRW; ACCPTS./CONR. CPM/JTS

SPECIAL ENGINEERING PROGRAM OFFICE (SEPO)

WEATHER FORECAST OFFICE
GREENVILLE/SPARTANBURG, SC

OVERALL SITE PLAN

044131–	SIZE 5	DWG. NO. C01	CLN. 10	REV. 1

FDSP0043 K0X0011 JAD 09/27/95@08:10

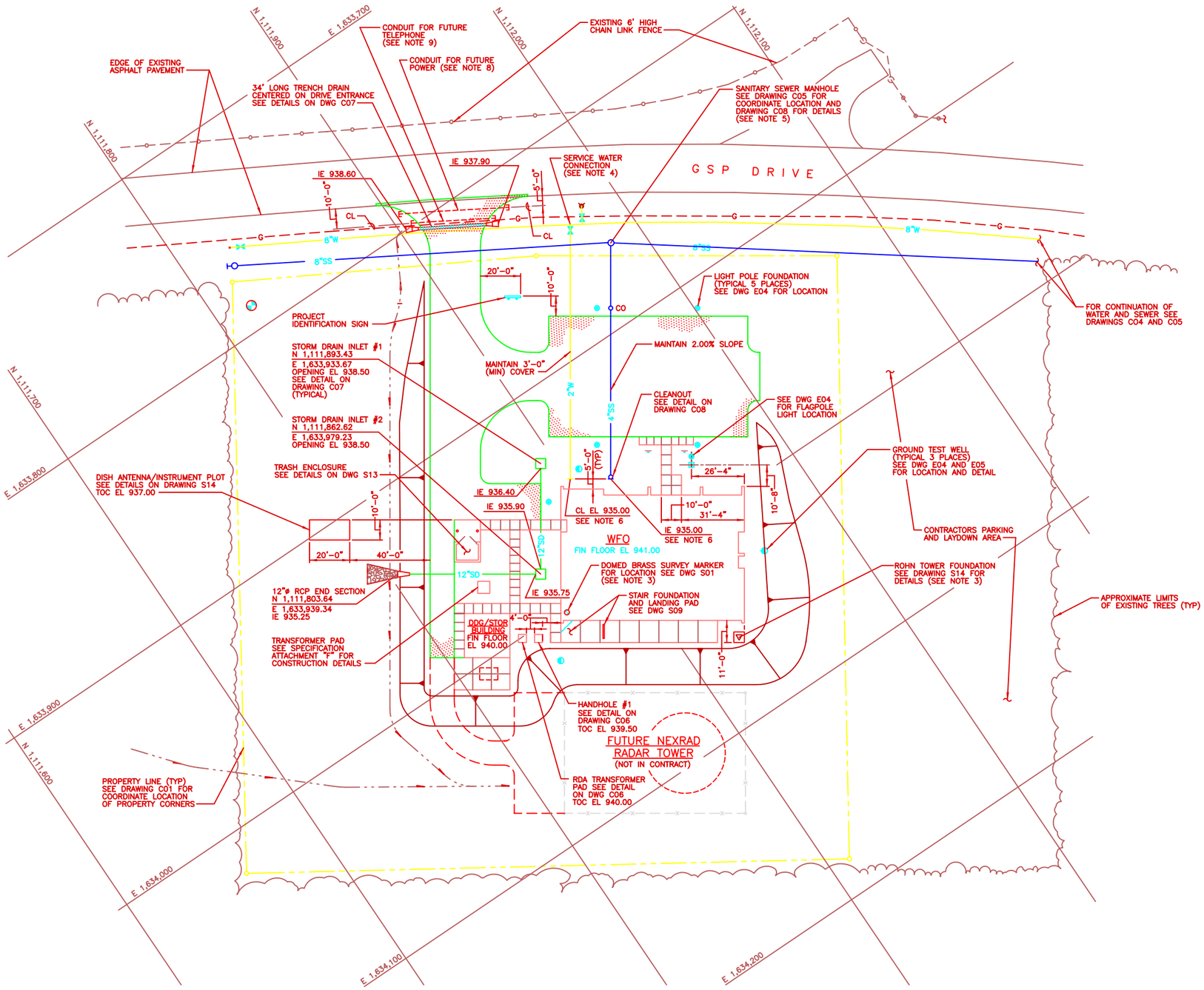

NOTES

1. FOR DRAWING LIST, SYMBOLS, AND ABBREVIATIONS SEE DWG I01. FOR GENERAL NOTES AND LEGEND SEE DWG C01.
2. EXISTING UTILITY INFORMATION SHOWN IS APPROXIMATE. FIELD VERIFY PRIOR TO EXCAVATION.
3. GEOGRAPHIC COORDINATES (NAD 83) AT THE CENTER OF THE ROHN TOWER FOUNDATION ARE 34°53'00.142" N, 82°13'12.337" W. COORDINATES OF THE DOMED BRASS SURVEY MARKER ARE 34°52'59.502" N, 82°13'13.027" W.
4. THE CONTRACTOR SHALL COORDINATE THE WATER SERVICE CONNECTION WITH GREENVILLE/SPARTANBURG AIRPORT AUTHORITY. ALL MATERIALS AND INSTALLATION, NOT NOTED OTHERWISE, ARE IN THE CONTRACT. THE CONTRACTOR SHALL OBTAIN ALL PERMITS AND PAY ALL FEES REQUIRED TO ESTABLISH WATER SERVICE.
5. THE CONTRACTOR SHALL COORDINATE THE SANITARY SEWER CONNECTION WITH THE GREENVILLE/SPARTANBURG AIRPORT AUTHORITY. ALL MATERIALS AND INSTALLATION, NOT NOTED OTHERWISE, ARE IN THE CONTRACT. THE CONTRACTOR SHALL OBTAIN ALL PERMITS AND PAY FEES REQUIRED TO ESTABLISH SANITARY SEWER SERVICE.
6. SEE DWG M01 FOR CONNECTION TO BUILDING PIPING. THE CONTRACTOR SHALL CAP ALL PIPES UNTIL CONNECTIONS ARE MADE.
7. FOR LOCATION OF NEW ELECTRICAL AND TELEPHONE SERVICE SEE DWG E04.
8. THE CONTRACTOR SHALL COORDINATE THE SIZE, DEPTH, MATERIAL AND LOCATION OF THE CONDUIT FOR FUTURE POWER LINE WITH THE GREENVILLE/SPARTANBURG AIRPORT AUTHORITY AND DUKE POWER.
9. THE CONTRACTOR SHALL COORDINATE THE SIZE, DEPTH, MATERIAL AND LOCATION OF THE CONDUIT FOR FUTURE TELEPHONE LINE WITH THE GREENVILLE/SPARTANBURG AIRPORT AUTHORITY AND SOUTHERN BELL.

SITE AND UTILITIES PLAN

SCALE: 1"=20'

GRID NORTH — BUILDING NORTH

0 10' 20' 40' 60'
SCALE: 1"=20'

NO.	DATE	PREPARED BY	CHECKED BY	ER APPROVED	AGENCY APPROVED	DESCRIPTION OF REVISION
1	10/9/95	JAD	JAD	ERP/RRW	FGR/JTS	REVISED PER AS-BUILT CONDITIONS

WFO / NEXRAD PROGRAM
PROJECT NO. I001

PROGRAM MANAGEMENT SERVICES CONTRACTOR
FLUOR DANIEL
GOULD EVANS ARCHITECTS, P.A.
KANSAS CITY, MO. U.S.A.

SAFETY SHOULD ALWAYS BE FIRST WITH EVERY TASK YOU DO

SEPO

DRAWN: C. RAYA
CHECKED: PW ARTHERTON
SUPV. ENGR.: D. LOHE
ENGR/PROJ. MGR.: BLR/RRW
AGCY/CORP.: EKM/JTS

SPECIAL ENGINEERING PROGRAM OFFICE (SEPO)

WEATHER FORECAST OFFICE
GREENVILLE/SPARTANBURG, SC
SITE AND UTILITIES PLAN

044131–	SIZE 5	DWG. NO. C02	CLIN. I0	REV. 1

FDSR0043 KC0C021 JAD 09/27/95@08:09

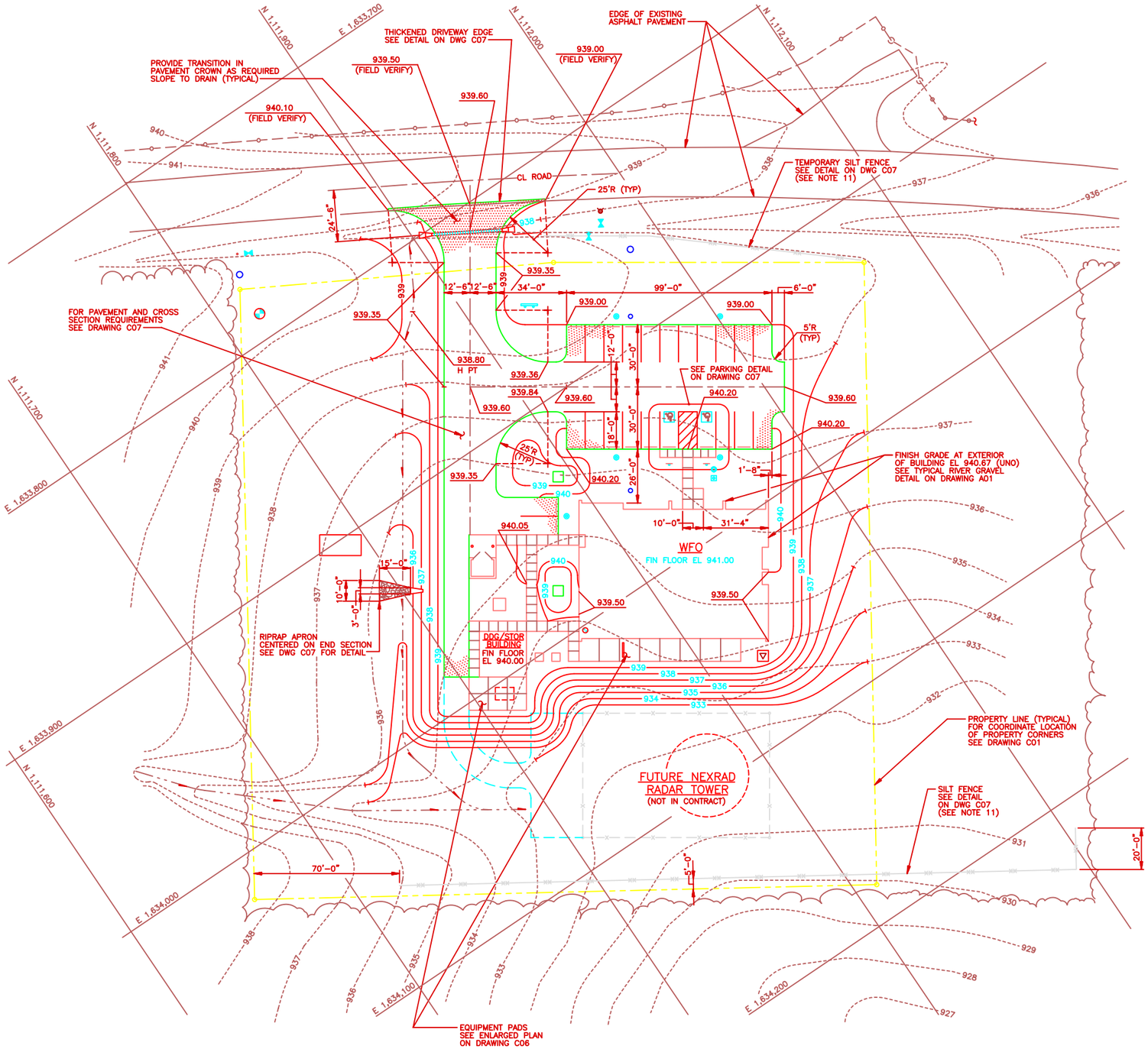

FINISH GRADING PLAN

SCALE: 1"=20'

GRID NORTH

BUILDING NORTH

0 10' 20' 40' 60'

SCALE: 1"=20'

NOTES

1. FOR DRAWING LIST, SYMBOLS, AND ABBREVIATIONS SEE DWG I01. FOR GENERAL NOTES AND LEGEND SEE DWG C01.
2. FINISHED SLOPES SHALL BE 3:1 OR FLATTER UNLESS OTHERWISE NOTED.
3. CULVERTS SHALL BE REINFORCED CONCRETE PIPE (RCP) CONFORMING TO ASTM C76, CLASS IV, WALL B (MINIMUM). PIPE SHALL BE FURNISHED WITH CONFINED O-RING GASKETED JOINTS CONFORMING TO ASTM C443 AND PRECAST CONCRETE FLARED END SECTIONS. CULVERT LENGTHS SHOWN INCLUDE END SECTIONS.
4. ALL EROSION AND SEDIMENT CONTROL MEASURES SHALL BE IN PLACE PRIOR TO ANY GRADING OPERATION AND/OR CONSTRUCTION OF STRUCTURES OR UTILITIES.
5. ALL EROSION AND SEDIMENT CONTROL MEASURES SHALL BE LEFT IN PLACE UNTIL THE AREA IS STABILIZED BY THE PERMANENT SOD.
6. ANY DISTURBED AREA THAT WILL BE LEFT EXPOSED FOR MORE THAN SIXTY (60) DAYS AND NOT SUBJECT TO CONSTRUCTION TRAFFIC SHALL IMMEDIATELY RECEIVE A TEMPORARY SEEDING AND FERTILIZATION BY THE CONTRACTOR. IF THE SEASON PROHIBITS TEMPORARY SEEDING, THE DISTURBED AREAS SHALL BE MULCHED WITH HAY AND ANCHORED.
7. THE CONTRACTOR SHALL AT ALL TIMES GRADE AND MAINTAIN THE SITE SO THAT ALL STORMWATER RUNOFF IS INTERCEPTED BY THE SILT FENCE.
8. THE CONTRACTOR SHALL INSPECT AND MAINTAIN ALL EROSION AND SEDIMENT CONTROL MEASURES ON A REGULAR BASIS AND AFTER EVERY STORM EVENT.
9. THE CONTRACTOR SHALL NOT LOCATE SOIL STOCKPILES WITHIN 50 FEET OF A SLOPE, ROADWAY OR DRAINAGE FACILITY. THE BASE OF ALL STOCKPILES SHALL BE PROTECTED BY A HAY BALE BARRIER OR SILT FENCE.
10. CONTRACTOR SHALL GRUB ALL TREE STUMPS WITHIN THE PROPERTY LINE AND IN THE LAYDOWN AREA IN THE MANNER DESCRIBED IN THE SPECIFICATION.
11. INSTALL SILT FENCE AFTER GRUBBING OPERATIONS AS SHOWN ON THIS DRAWING. THE CONTRACTOR IS TO ENSURE THAT THE SILT FENCE INTERCEPTS ALL STORMWATER RUNOFF.

NO.	DATE	PREPARED BY	CHECKED BY	FSI APPROVED	ACOS/COTR APPROVED	DESCRIPTION OF REVISION
1	10/9/95	JAD	JAD	ERP/RRW	FGR/JTS	REVISED PER AS-BUILT CONDITIONS

WFO / NEXRAD PROGRAM
PROJECT NO. I001

PROGRAM MANAGEMENT SERVICES CONTRACTOR
FLUOR DANIEL
GOULD EVANS ARCHITECTS, P.A.
KANSAS CITY, MO. U.S.A.

SAFETY SHOULD ALWAYS BE FIRST WITH EVERY TASK YOU DO

DRAWN C. RAYA
CHECKED PW ARTHERTON
SUPV. ENGR. D LOHE
ENGR/PROJ. MGR. BLR/RRW
ACOS/COTR EMM/JTS

SPECIAL ENGINEERING PROGRAM OFFICE (SEPO)

WEATHER FORECAST OFFICE
GREENVILLE/SPARTANBURG, SC
FINISH GRADING PLAN

044131-	SIZE 5	DWG. NO. C03	CLIN. I0	REV. 1

FDSP0043 KCIOC031 JAD 09/27/95@08:07

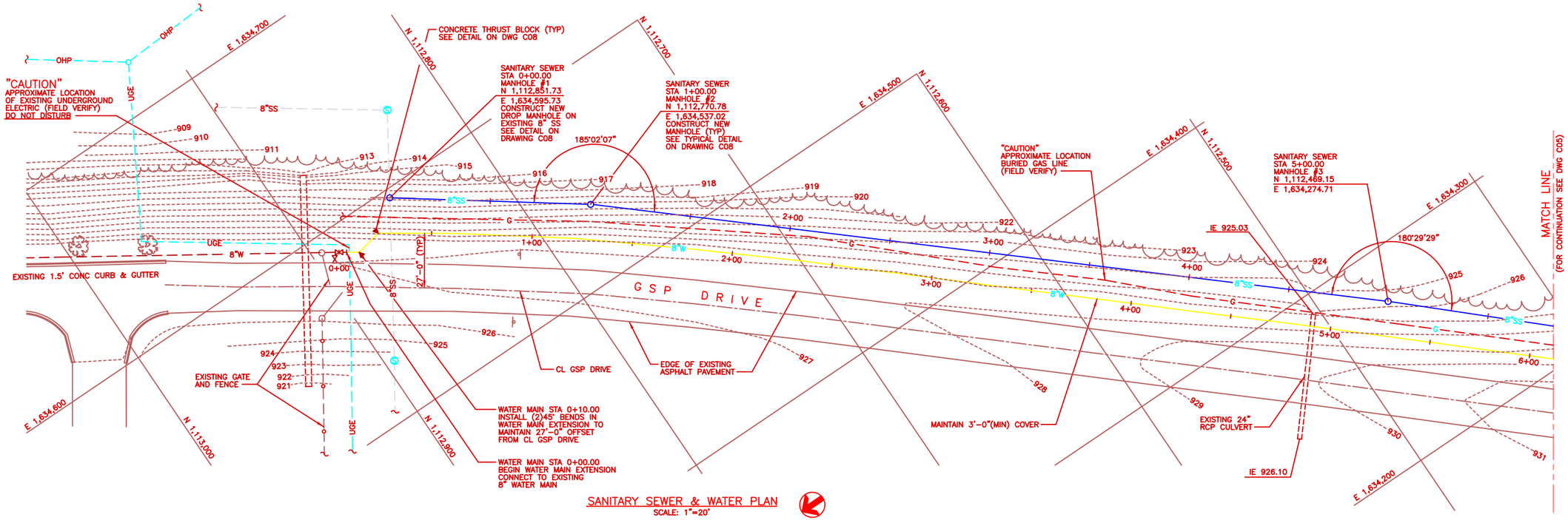

SANITARY SEWER & WATER PLAN
SCALE: 1"=20'

NOTES

1. FOR DRAWING LIST, SYMBOLS, AND ABBREVIATIONS SEE DWG I01. FOR GENERAL NOTES AND LEGEND SEE DWG C01.
2. EXISTING UTILITY INFORMATION SHOWN IS APPROXIMATE. THE CONTRACTOR SHALL OBTAIN FIELD LOCATIONS OF EXISTING UTILITIES FROM THE APPROPRIATE AGENCY, UTILITY COMPANY OR LOCAL LOCATOR SERVICE PRIOR TO ANY EXCAVATION.
3. THE CONTRACTOR SHALL OBTAIN ALL PERMITS AND PAY ALL FEES AS REQUIRED FOR SANITARY SEWER AND WATER MAIN CONSTRUCTION.
4. THE CONTRACTOR SHALL PROVIDE ALL TRAFFIC CONTROL, BARRICADES, AND ANY SAFETY ITEMS RELATED TO THIS CONSTRUCTION AS REQUIRED BY THE GREENVILLE/SPARTANBURG AIRPORT AUTHORITY. TRAFFIC CONTROL DEVICE AND METHODS SHALL BE IN ACCORDANCE WITH TRAFFIC CONTROLS, PART V OF THE SOUTH CAROLINA MANUAL ON UNIFORM TRAFFIC CONTROL DEVICES FOR STREETS AND HIGHWAYS.
5. THE CONTRACTOR SHALL FIELD VERIFY THE INVERT ELEVATION OF THE EXISTING SANITARY SEWER PRIOR TO BEGINNING CONSTRUCTION OF SANITARY SEWER EXTENSION.
6. ALL SANITARY SEWER PIPE LENGTHS SHOWN ARE MEASURED FROM CL OF MANHOLE TO CL OF MANHOLE.
7. THE CONTRACTOR SHALL DEFLECT WATER MAIN PIPE AS REQUIRED, PER MANUFACTURER'S RECOMMENDATIONS, TO MAINTAIN 27'-0" DISTANCE TO THE CL OF GSP DRIVE.

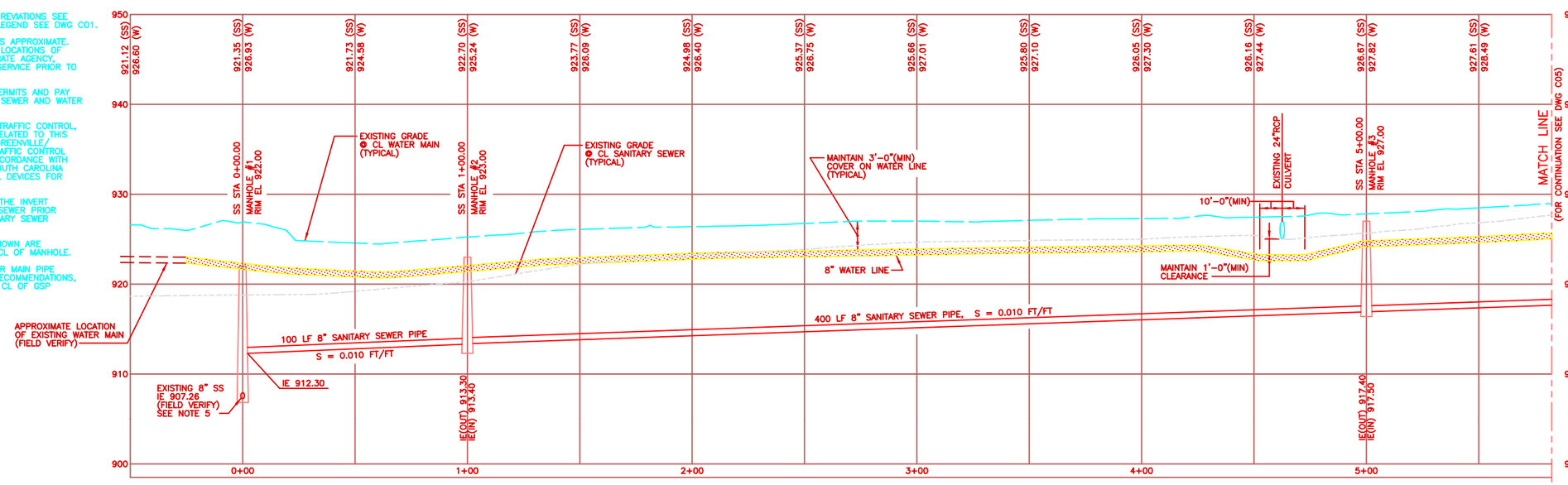

SANITARY SEWER & WATER PROFILE
SCALE: 1"=20' HORZ
1"=5' VERT

NO.	DATE	PREPARED BY	CHECKED BY	APPROVED	ACCEPTED/CODE APPROVED	DESCRIPTION OF REVISION
1	10/9/95	JAD	JAD	ERP/RRW	FGR/JTS	REVISED PER AS-BUILT CONDITIONS

WFO / NEXRAD PROGRAM
PROJECT NO. I001

PROGRAM MANAGEMENT SERVICES CONTRACTOR
FLUOR DANIEL
GOULD EVANS ARCHITECTS, P.A.
KANSAS CITY, MO. U.S.A.

SAFETY SHOULD ALWAYS BE FIRST WITH EVERY TASK YOU DO

DESIGNED R. SOUTHERN
CHECKED PW ARTHERTON
SUPV. ENGR. D. LOHE
ENGR/PROJ. MGR. BLR/RRW
ACCPTD./CODE EHM/JTS

SPECIAL ENGINEERING PROGRAM OFFICE (SEPO)
WEATHER FORECAST OFFICE
GREENVILLE/SPARTANBURG, SC
SANITARY SEWER & WATER PLAN & PROFILE

SIZE	DWG. NO.	CLIN.	REV.
5	C04	I0	1

044131-

0 5' 10' 15'
SCALE: 1"=5'
0 10' 20' 40' 60'
SCALE: 1"=20'

FDSP0043 K000041 JAD 09/27/95@08:06

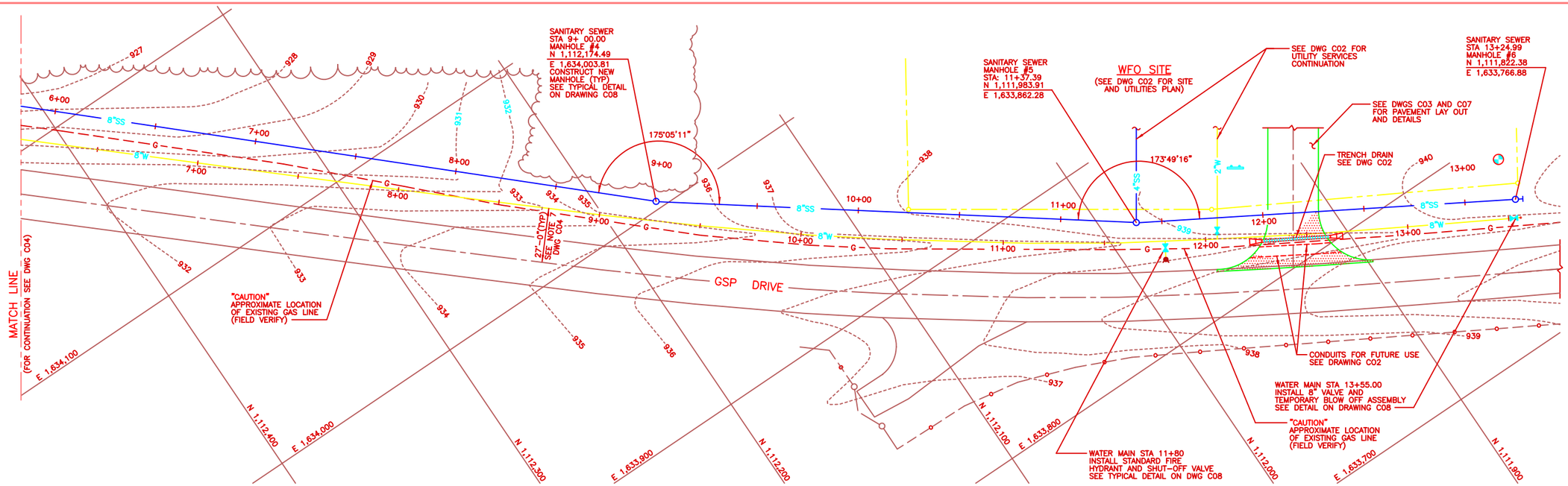

SANITARY SEWER & WATER PLAN

SCALE: 1"=20'

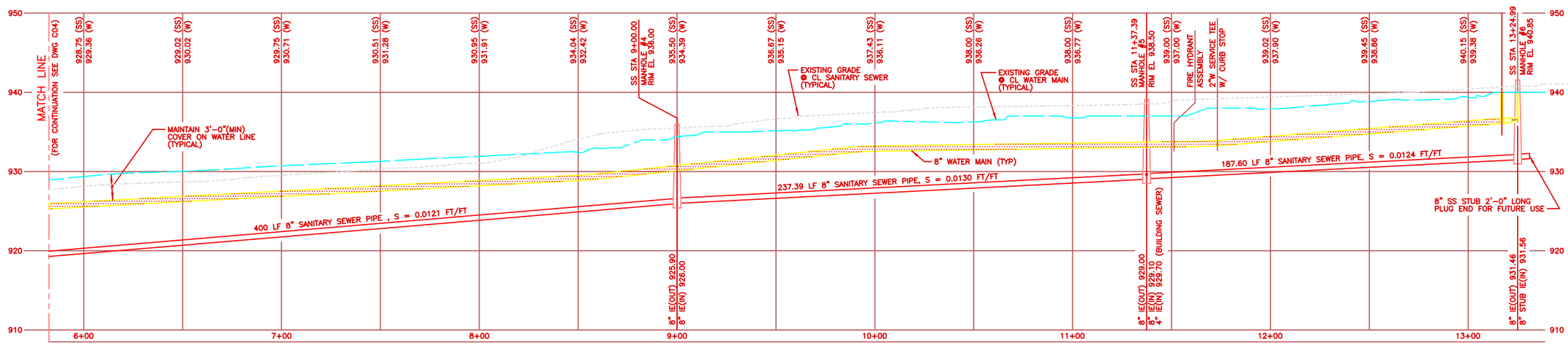

SANITARY SEWER & WATER PROFILE

SCALE: 1"=20' HORZ
1"=5' VERT

NOTES

1. FOR DRAWING LIST, SYMBOLS, AND ABBREVIATIONS SEE DWG I01. FOR GENERAL NOTES AND LEGEND SEE DWG C01.
2. FOR SANITARY SEWER AND WATER MAIN NOTES SEE DWG C04.

0 5' 10' 15'
SCALE: 1"=5'

0 10' 20' 40' 60'
SCALE: 1"=20'

NO.	DATE	PREPARED BY	CHECKED BY	PDI APPROVED	ACOE/CORPS APPROVED	DESCRIPTION OF REVISION
1	10/9/95	JAD	JAD	ERP/RRW	FGR/JTS	REVISED PER AS-BUILT CONDITIONS

WFO / NEXRAD PROGRAM
PROJECT NO. I001

PROGRAM MANAGEMENT SERVICES CONTRACTOR
FLUOR DANIEL
GOULD EVANS ARCHITECTS, P.A.
KANSAS CITY, MO. U.S.A.

SAFETY SHOULD ALWAYS BE FIRST WITH EVERY TASK YOU DO

SPECIAL ENGINEERING PROGRAM OFFICE (SEPO)

DRAWN: R. SOUTHERN
CHECKED: PW ARTHERTON
SUPV. ENGR.: D LOHE
ENGR/PROJ. MGR.: ERP/RRW
ACOE/CORPS: FRM/JTS

WEATHER FORECAST OFFICE
GREENVILLE/SPARTANBURG, SC

SANITARY SEWER & WATER PLAN & PROFILE

SIZE	DWG. NO.	CLIN.	REV.
5	C05	10	1

044131-

FDSP0043 K0C0051 JAD 09/27/95@08:05

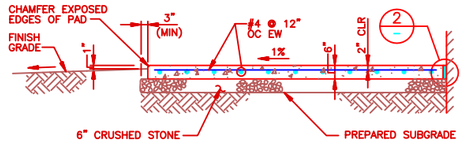

SECTION 1
SCALE: NONE

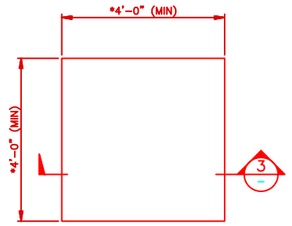

RDA TRANSFORMER PAD PLAN
SCALE: 3/4"=1'-0"
(SEE DWG C02 FOR LOCATION)
* DIMENSION TO BE COORDINATED WITH THE TRANSFORMER PROVIDED

GRID NORTH

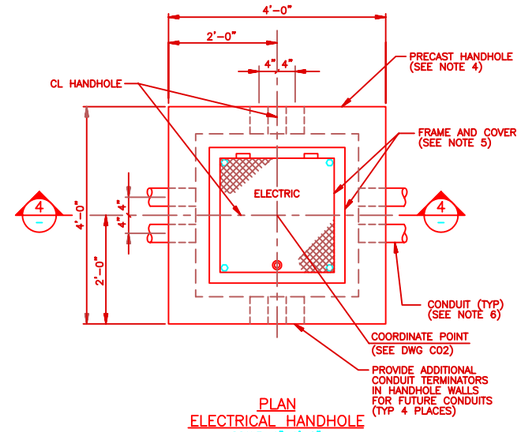

PLAN
ELECTRICAL HANDHOLE
SCALE: 1"=1'-0"
(SEE DWG C02 FOR LOCATION)

NOTES

1. FOR DRAWING LIST AND ABBREVIATIONS SEE DWG I01. FOR GENERAL NOTES AND LEGEND SEE DWG C01.
2. FOR EQUIPMENT ARRANGEMENT SEE DWG M03 AND M07.
3. THE CONTRACTOR SHALL PROVIDE CONTROL JOINTS IN SIDEWALKS AT EQUALLY SPACED INTERVALS AS SHOWN ON THE DRAWINGS. MAXIMUM CONTROL JOINT SPACING SHALL NOT EXCEED SIDEWALK WIDTH. CONTROL JOINT DEPTH SHALL BE 1/4 TO 1/3 THE THICKNESS OF THE SIDEWALK AND FORMED BY A BUTTERFLY TOOL (R=1/8"). ISOLATION JOINTS CONFORMING TO DETAIL 2 ON THIS DRAWING SHALL BE PROVIDED WHERE SIDEWALKS ABUT FOUNDATION WALLS, CONCRETE PADS, OR CONCRETE PAVEMENT. EXPOSED EDGES OF THE SIDEWALK SHALL BE TOOLED.
4. ELECTRICAL HANDHOLES SHALL BE PRECAST CONCRETE STRUCTURES DESIGNED AND REINFORCED FOR EXPECTED SOIL PRESSURES AND AASHTO H-20 TRAFFIC LOADINGS. HANDHOLES SHALL BE WATERTIGHT.
5. HANDHOLE FRAME AND COVER SHALL BE CASTINGS FABRICATED FROM GRAY IRON CONFORMING TO ASTM A48. FRAME AND COVER SHALL BE SUITABLE FOR LIGHT TRAFFIC APPLICATIONS. COVER SHALL HAVE HINGES, BE PROVIDED WITH A LIFTING RING AND LOCKING DEVICES, AND SHALL BE LETTERED "ELECTRIC". PROVIDE HOLDDOWN BOLTS AND NEOPRENE GASKET WITH COVER AS REQUIRED TO MAKE CASTING ASSEMBLY WATERTIGHT.
6. CONDUITS SHOWN ARE FOR REFERENCE PURPOSES ONLY. FOR REQUIRED SIZE, QUANTITY, AND ORIENTATION OF CONDUITS SEE DWG E04. CONDUIT PENETRATIONS SHALL BE SYMMETRICAL ABOUT THE CENTERLINES OF THE HANDHOLES.
7. CONDUITS AND CONDUIT TERMINATORS NOT USED SHALL BE PLUGGED WITH EXPANDABLE WATERTIGHT CONDUIT DUCT PLUGS. CONDUITS WITH CONDUCTORS SHALL BE SEALED WATERTIGHT.
8. PULLING IRONS SHALL BE 1/2" DIAMETER SMOOTH BENT BARS CONFORMING TO ASTM A615. HOT DIP GALVANIZE AFTER FABRICATION. PULLING IRONS SHALL BE CENTERED ABOVE CONDUITS AND TIED TO REINFORCING STEEL IN HANDHOLE WALLS.

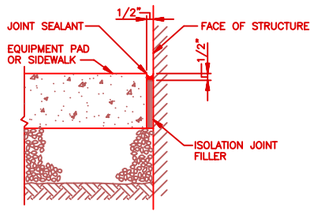

ISOLATION JOINT
DETAIL 2
SCALE: NONE

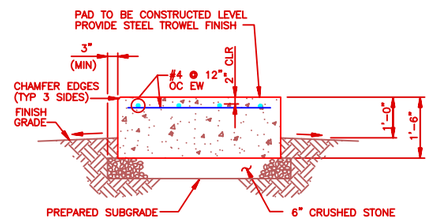

SECTION 3
SCALE: NONE

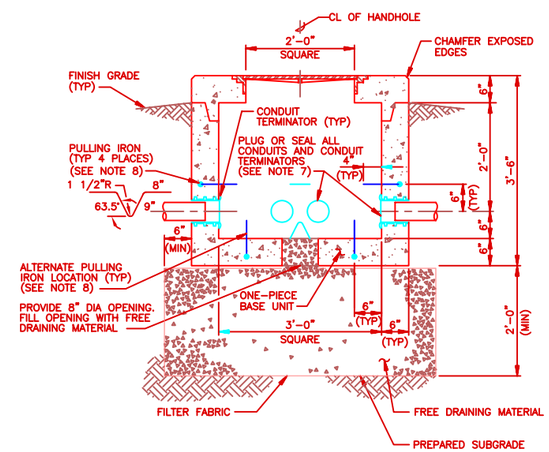

SECTION 4
SCALE: NONE

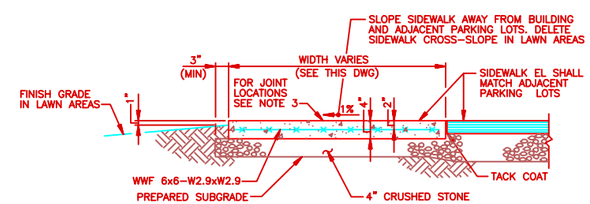

TYPICAL SIDEWALK SECTION
SCALE: NONE

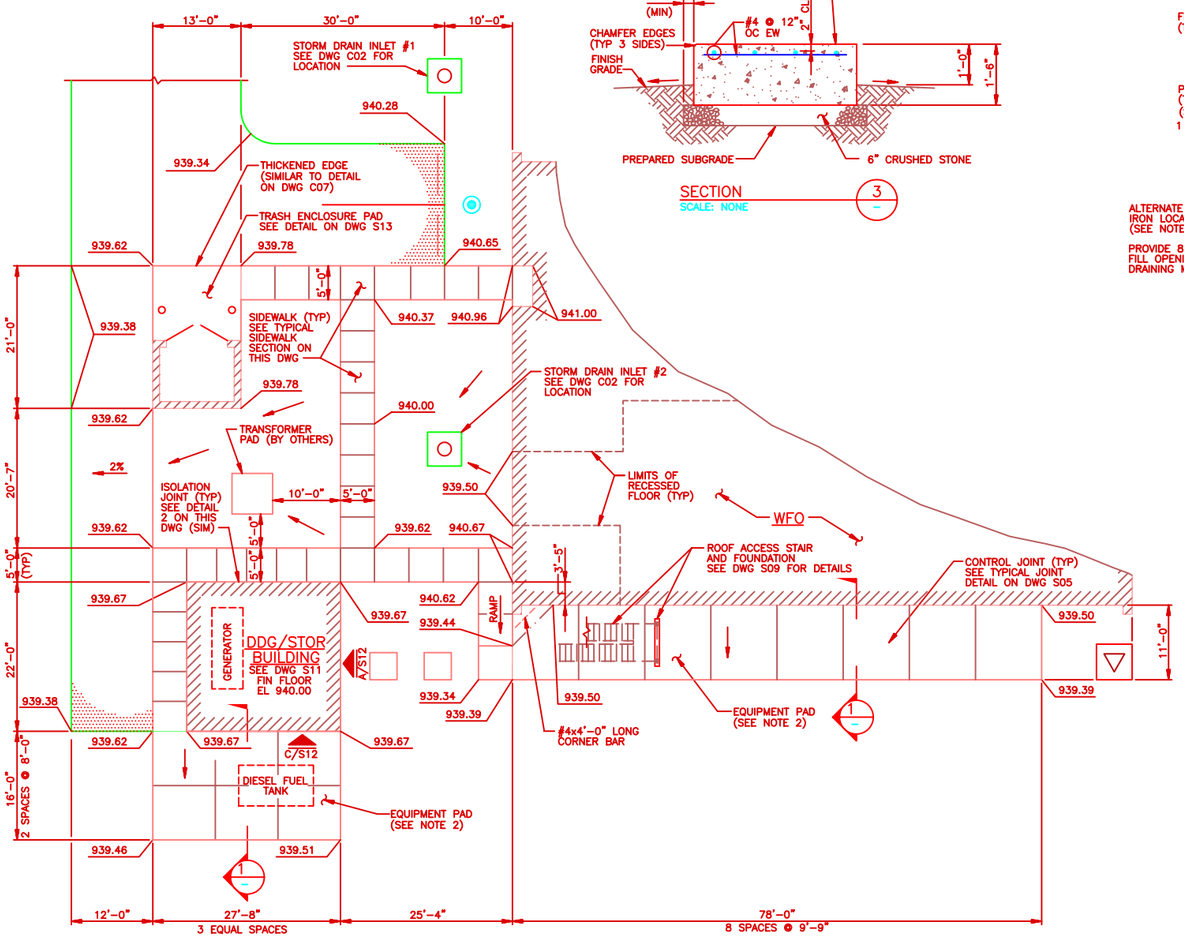

ENLARGED PLAN
SCALE: 1/8"=1'-0"
(SEE DWG C03 FOR LOCATION)

GRID NORTH

0 6" 1' 2' 3'
SCALE: 1"=1'-0"

0 1' 2' 3' 4'
SCALE: 3/4"=1'-0"

0 4' 8' 16' 24'
SCALE: 1/8"=1'-0"

NO.	DATE	PREPARED BY	CHECKED BY	RIS APPROVED	ACOS/COTR APPROVED	DESCRIPTION OF REVISION
1	10/9/95	JAD	JAD	ERP/RRW	FGR/JTS	REVISED PER AS-BUILT CONDITIONS

WFO / NEXRAD PROGRAM
PROJECT NO. 1001

PROGRAM MANAGEMENT SERVICES CONTRACTOR
FLUOR DANIEL
GOULD EVANS ARCHITECTS, P.A.
KANSAS CITY, MO. U.S.A.

SAFETY SHOULD ALWAYS BE FIRST WITH EVERY TASK YOU DO

DRAWN: C. RAYA
CHECKED: PW ARTHERTON
SUPV. ENGR.: D. LOHE
ENGR/PROJ. MGR.: BLR/RRW
ACOS/COTR: EHM/JTS

SPECIAL ENGINEERING PROGRAM OFFICE (SEPO)
WEATHER FORECAST OFFICE
GREENVILLE/SPARTANBURG, SC
SECTIONS AND DETAILS
SHEET 1 OF 3

044131-	SIZE 5	DWG. NO. C06	CLIN. 10	REV. 1

FDSP0043 KCOC0861 JAD 09/27/95@08:03

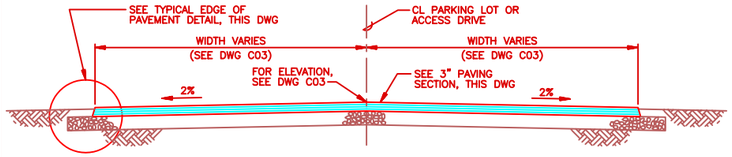

TYPICAL ACCESS DRIVE SECTION
SCALE: NONE

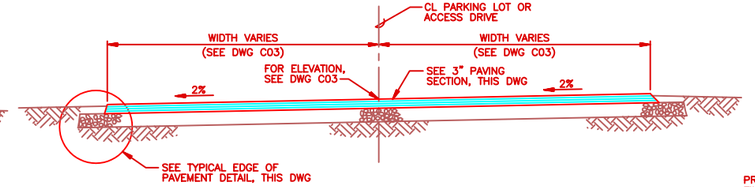

TYPICAL PARKING LOT SECTION
SCALE: NONE

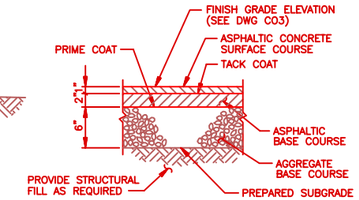

3" ASPHALTIC CONCRETE PAVING SECTION
SCALE: NONE
(SEE DWG C03 FOR PAVING LIMITS)

NOTES

1. FOR DRAWING LIST AND ABBREVIATIONS SEE DWG I01. FOR GENERAL NOTES AND LEGEND SEE DWG C01.
2. ACCESSIBLE PARKING SIGN AND PAVEMENT SYMBOL SHALL CONFORM TO ANSI A117.1.
3. TRENCH DRAINS SHALL BE PROVIDED WITH CAST IRON FRAMES AND GRATE CONFORMING TO ASTM A48. THE CASTINGS SHALL BE DESIGNED FOR 16,000 LB WHEEL LOADS. TRENCH DRAIN GRATE SHALL BE BICYCLE SAFE AND BOLTED TO THE FRAMES.
4. STORM DRAIN INLET SHALL BE A PRECAST CONCRETE STRUCTURE DESIGNED AND REINFORCED FOR EXPECTED SOIL PRESSURES AND AASHTO H-20 TRAFFIC LOADINGS.

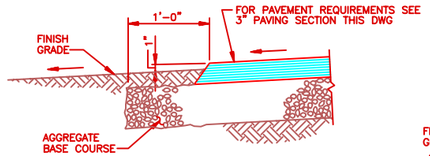

TYPICAL EDGE OF PAVEMENT
SCALE: NONE

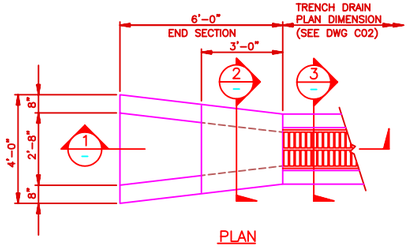

PLAN
TRENCH DRAIN AND END SECTION DETAIL
SCALE: 1/2"=1'-0"
(SEE DWG C02 FOR LOCATION AND ORIENTATION)

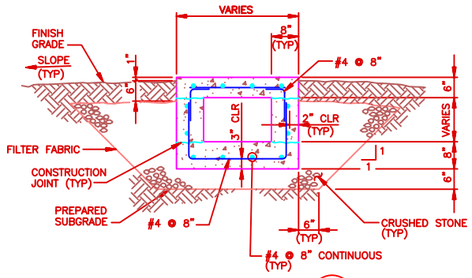

SECTION 2
SCALE: NONE

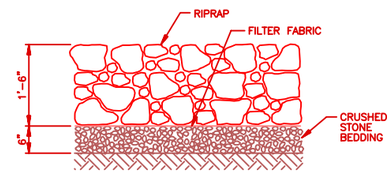

TYPICAL RIPRAP DETAIL
SCALE: NONE
(SEE DWG C03 FOR RIPRAP LIMITS)

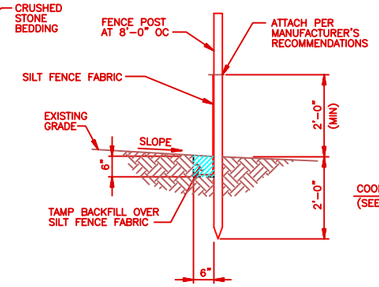

SILT FENCE DETAIL
SCALE: NONE
(SEE DWG C03 FOR LIMITS OF FENCING)

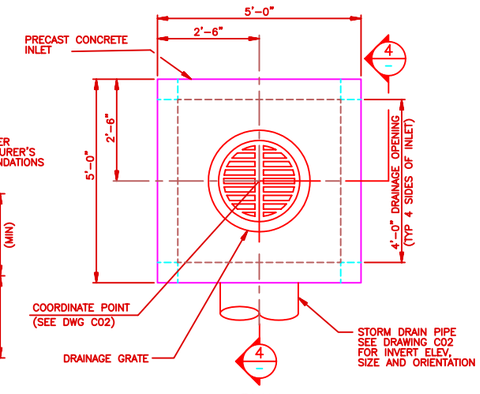

PLAN
STORM DRAIN INLET #1 & #2
SCALE: 3/4"=1'-0"
(SEE DWG C02 FOR LOCATION AND ORIENTATION)

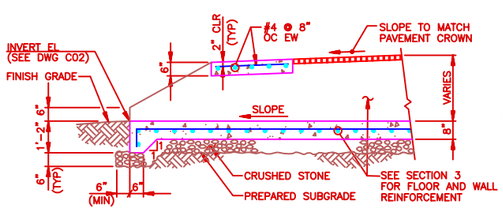

SECTION 1
SCALE: NONE

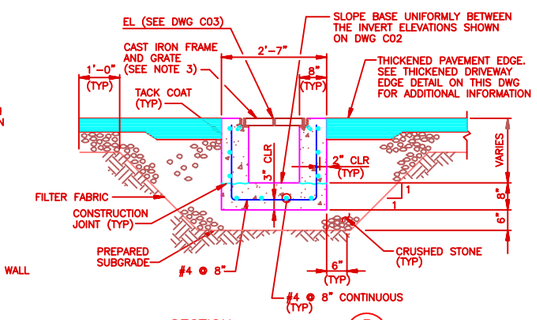

SECTION 3
SCALE: NONE

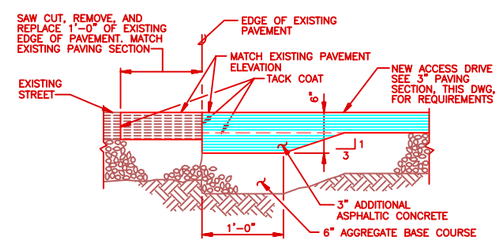

THICKENED DRIVEWAY EDGE AT EXISTING STREET
SCALE: NONE
(SEE DWG C03 FOR LOCATION)

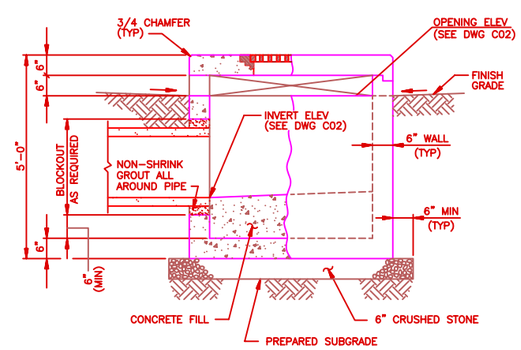

SECTION 4
SCALE: NONE

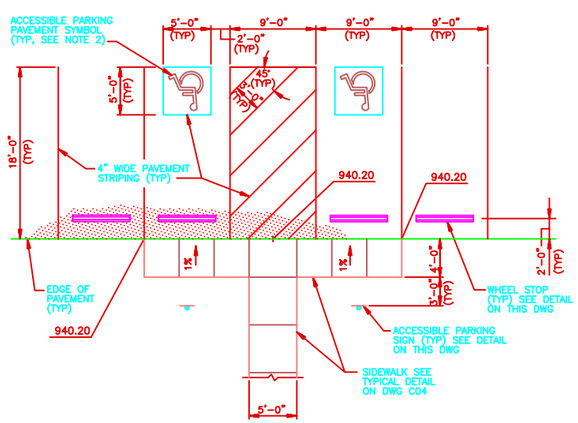

PLAN
PARKING DETAIL
SCALE: 3/16"=1'-0"
(SEE DWG C03 FOR LOCATION)

GRID NORTH

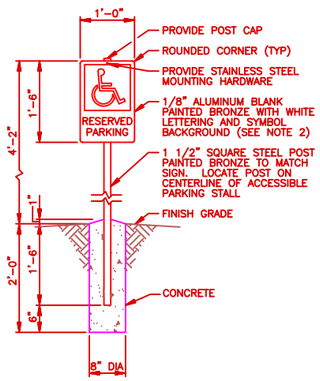

ACCESSIBLE PARKING SIGN
SCALE: NONE

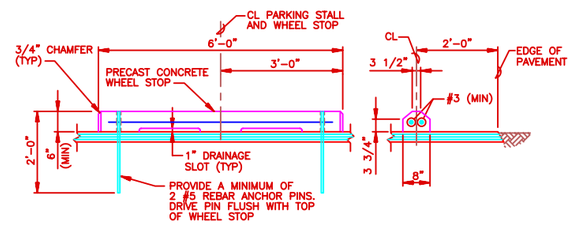

SIDE VIEW

END VIEW

TYPICAL WHEEL STOP
SCALE: NONE

0 1' 2' 4' 6'
SCALE: 1/2"=1'-0"
0 1' 2' 3' 4'
SCALE: 3/4"=1'-0"
0 4' 8' 12' 16'
SCALE: 3/16"=1'-0"

NO.	DATE	PREPARED BY	CHECKED BY	NOS APPROVED	ACOS/CCOS APPROVED	DESCRIPTION OF REVISION
1	10/9/95	JAD	HWJ	ERP/RRW	FGR/JTS	REVISED PER AS-BUILT CONDITIONS

WFO / NEXRAD PROGRAM
PROJECT NO. I001

PROGRAM MANAGEMENT SERVICES CONTRACTOR
FLUOR DANIEL
GOULD EVANS ARCHITECTS, P.A.
KANSAS CITY, MO. U.S.A.

SAFETY SHOULD ALWAYS BE FIRST WITH EVERY TASK YOU DO

DESIGNED C. RAYA
CHECKED PW ARTHERTON
SUPV. ENGR. D. LONE
ENGR/PROJ. MGR. BLR/RRW
ACOTR/COTR EHM/JTS

SPECIAL ENGINEERING PROGRAM OFFICE (SEPO)
WEATHER FORECAST OFFICE
GREENVILLE/SPARTANBURG, SC
SECTIONS AND DETAILS
SHEET 2 OF 3

	SIZE	DWG. NO.	CLIN.	REV.
044131-	5	C07	I0	1

FDSP0043 K000071 JAD 09/27/95@08:01

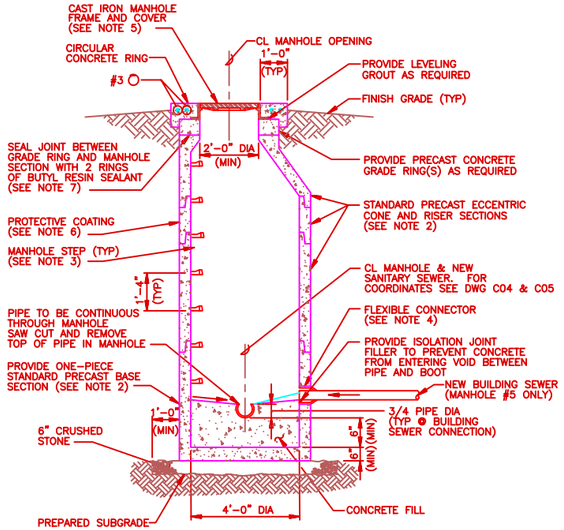

NEW SANITARY SEWER MANHOLES #2 THRU #6
SCALE: NONE
(SEE DWG C04 & C05 FOR LOCATION, ELEVATION, AND PIPE ORIENTATION)

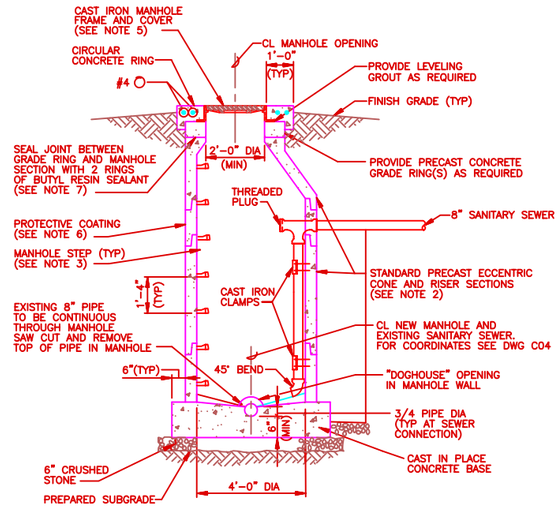

NEW SANITARY SEWER MANHOLE #1
SCALE: NONE
(SEE DWG C04 FOR LOCATION, ELEVATION, AND PIPE ORIENTATION)

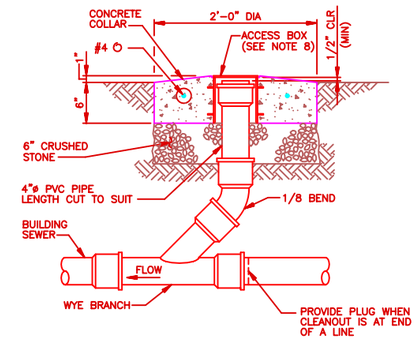

CLEANOUT DETAIL
SCALE: NONE
(SEE DWG C02 FOR LOCATION)

NOTES

1. FOR DRAWING LIST, SYMBOLS, AND ABBREVIATIONS SEE DWG I01.
2. PRECAST CONCRETE MANHOLE SECTIONS SHALL CONFORM TO ASTM C478. JOINTS BETWEEN SECTIONS SHALL BE FURNISHED WITH CONFINED O-RING RUBBER GASKETS.
3. MANHOLE STEPS SHALL BE POLYPROPYLENE ENCASED STEEL BARS DESIGNED FOR A "PRESS-FIT" INSTALLATION IN PREDRILLED HOLES. STEPS SHALL HAVE A SLIP RESISTANT SURFACE AND MEET THE REQUIREMENTS OF ASTM C478.
4. ALL PIPE CONNECTIONS TO NEW MANHOLE SHALL BE MADE WITH STANDARD MANUFACTURE NEOPRENE-EPDM WATERTIGHT RUBBER BOOTS CONFORMING TO ASTM C923. BOOTS SHALL BE INSTALLED IN CORE-DRILLED, SLEEVED, OR BLOCKED-OUT HOLES PROVIDED BY THE MANHOLE FABRICATOR. NO HOLES SHALL BE MADE IN THE FIELD. BOOT INSTALLATION SHALL BE IN ACCORDANCE WITH THE MANUFACTURER'S INSTRUCTIONS.
5. MANHOLE FRAME AND COVER SHALL CONFORM TO FEDERAL SPECIFICATION RR-F-621D, TYPE 1, STYLE A, SIZE 24C. PROVIDE SOLID, NON-ROCKING COVER. COVER SHALL BE LETTERED "SANITARY" AND BE PROVIDED WITH A SELF-SEALING CONTINUOUS GASKET TO PREVENT STORM WATER INFILTRATION.
6. THE MANHOLE SHALL RECEIVE 2 COATS OF PROTECTIVE COAL TAR COATING ON ALL OUTSIDE SURFACES. EACH COAT SHALL HAVE A MINIMUM DRY FILM THICKNESS OF 12-14 MILS. SURFACE PREPARATION AND MATERIAL APPLICATION SHALL BE IN ACCORDANCE WITH THE COATING MANUFACTURER'S RECOMMENDATIONS.
7. BUTYL RESIN SEALANT SHALL CONFORM TO AASHTO M198. SURFACE PREPARATION AND PRODUCT APPLICATION SHALL BE IN ACCORDANCE WITH MANUFACTURER'S RECOMMENDATIONS. APPLY SEALANT PRIMER TO CONCRETE SURFACES IF RECOMMENDED BY SEALANT MANUFACTURER.
8. THE CONTRACTOR SHALL PROVIDE CLEANOUT WITH A CAST IRON ACCESS BOX. THE ACCESS BOX SHALL HAVE ANCHORING FLANGES AND A CAST IRON LID LABELED "CLEANOUT". THE CLEANOUT FERRULE SHALL NOT BE IN CONTACT WITH THE ACCESS BOX.

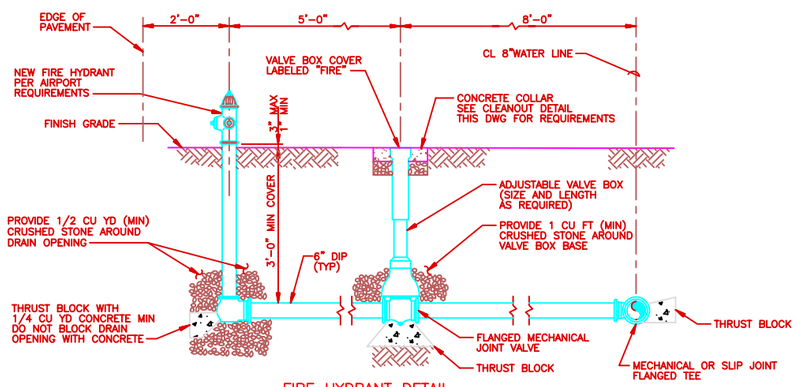

FIRE HYDRANT DETAIL
SCALE: NONE
(SEE DWG C05 FOR LOCATION)

TABLE FOR CONCRETE THRUST BLOCKING

BEARING AREAS (IN SQUARE FEET)

PIPE SIZE	BENDS				TEES,DEAD ENDS, AND CROSS W/DEAD END BRANCHES
D	90°	45°	22 1/2°	11 1/4°	
8"	4.0	2.2	1.1	0	2.8

AREAS GIVEN IN TABLE ARE BASED UPON INTERNAL STATIC PRESSURE OF 100 PSI AND SOIL BEARING CAPACITY OF 1,000 LBS PER SQUARE FOOT

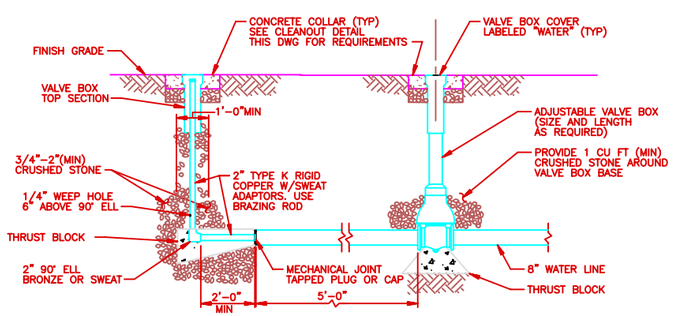

TEMPORARY BLOW OFF DETAIL
SCALE: NONE
(SEE DWG C05 FOR LOCATION)

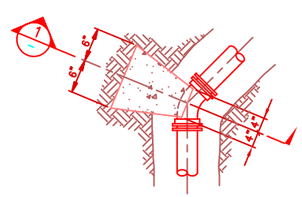

PLAN
THRUST BLOCK DETAIL – BENDS
SCALE: NONE
(SEE DWG C04 FOR LOCATIONS)

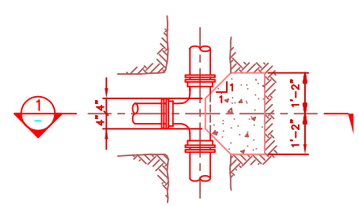

PLAN
THRUST BLOCK DETAIL – TEES
SCALE: NONE
(SEE DWG C05 FOR LOCATION)

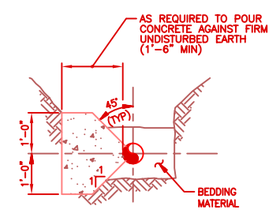

SECTION 1
SCALE: NONE

NO.	DATE	PREPARED BY	CHECKED BY	PSI APPROVED	ACOR/COTR APPROVED	DESCRIPTION OF REVISION
1	10/9/95	JAD	JAD	ERP/RRW	FGR/JTS	REVISED PER AS-BUILT CONDITIONS

WFO / NEXRAD PROGRAM
PROJECT NO. I001

PROGRAM MANAGEMENT SERVICES CONTRACTOR
FLUOR DANIEL
GOULD EVANS ARCHITECTS, P.A.
KANSAS CITY, MO. U.S.A.

SAFETY SHOULD ALWAYS BE FIRST WITH EVERY TASK YOU DO

DRAWN: C. RAYA
CHECKED: PW ARTHERTON
SUP'V. ENGR.: D. LOHE
ENGR/PROJ. MGR.: BLR/RRW
ACOR/COTR: EHM/JTS

SPECIAL ENGINEERING PROGRAM OFFICE (SEPO)

WEATHER FORECAST OFFICE
GREENVILE/SPARTANBURG, SC
SECTIONS AND DETAILS
SHEET 3 OF 3

SIZE	DWG. NO.	CLIN.	REV.
044131-	5	C08	I0	1

FDSP0043 KCKC0081 JAD 09/27/95@7:57

LEGEND ONE-LINE/SCHEMATIC DIAGRAMS

- 30A 3P — SAFETY SWITCH, 3 POLE, RATING AS NOTED
- 225 AT 3P — CIRCUIT BREAKER, 3 POLE, TRIP RATING AS NOTED
- TRANSFORMER
- CONTACT
- FUSE
- C — COIL
- CURRENT TRANSFORMER
- AUTOMATIC TRANSFER SWITCH
- G — GENERATOR
- M — UTILITY METERING
- GROUND
- 20 — INDUCTION MOTOR (NUMBER INDICATES HORSEPOWER)
- ELECTRICAL EQUIPMENT ENCLOSURE
- BUILDING LINE

LEGEND PLAN DRAWINGS

- FLUORESCENT LIGHTING FIXTURE
- FLUORESCENT LIGHTING FIXTURE EQUIPPED WITH BATTERY BACKUP
- FLUORESCENT STRIP FIXTURE
- EXIT LIGHT FIXTURE
- WALL MOUNTED LIGHT FIXTURE
- RECESSED/SURFACE MOUNTED LIGHT FIXTURE
- PHOTOCELL
- PARKING LOT LIGHTING FIXTURE
- $ — SINGLE POLE WALL SWITCH
- $3 — 3 WAY WALL SWITCH
- $H — HAND-OFF-AUTO SWITCH
- $D — DIMMER SWITCH
- SWITCHED PHASE CONDUCTOR; GND; NEUTRAL; UNSWITCHED PHASE CONDUCTOR — CONDUIT CONCEALED IN WALLS, ABOVE CEILINGS, OR UNDER ACCESS FLOOR
- CONDUIT EMBEDDED IN CONCRETE OR BELOW GRADE
- FLEXIBLE METAL CONDUIT
- 3/4" FLEXIBLE METAL CONDUIT (UNO)
- GROUND TEST WELL
- GROUND ROD
- 250 KCMIL BARE COPPER GROUND WIRE (UNO)
- RGS CONDUIT STUBBED OUT 3" PAST WALL UNDER ACCESS FLOOR AND TERMINATED WITH INSULATED GROUNDING BUSHING. BOTTOM OF CONDUIT SHALL BE 3" ABOVE SLAB.
- CONDUIT TURNING DOWN
- CONDUIT TURNING UP
- CONDUIT CAPPED
- DUPLEX GROUNDING RECEPTACLE
- DUPLEX GROUNDING RECEPTACLE, ABOVE COUNTER OR BACKSPLASH
- GFCI — DUPLEX GROUNDING RECEPTACLE, WITH GFCI
- GFCI — DUPLEX GROUNDING RECEPTACLE WITH GFCI, ABOVE COUNTER OR BACKSPLASH
- RECEPTACLE, 3ø, 4W, W/GND, CONFIGURATION AS NOTED
- 3 — MOTOR (NUMBER INDICATES HORSEPOWER)
- 4" SQUARE (UNO) JUNCTION BOX WITH BLANK COVER. BRACKET INDICATES WALL MOUNT.
- COMMUNICATION OUTLET BOX AND COVER WITH 1/4" CENTERED HOLE, 15" AFF (UNO), 1" RGS CONDUIT (UNO)
- SAME AS ABOVE EXCEPT FOR LAN SYSTEM
- 4-PLEX RECEPTACLE AND FLOOR BOX
- DUPLEX RECEPTACLE AND FLOOR BOX
- 30A, 3P SAFETY SWITCH, NON-FUSED, 600V RATED (UNO)
- STARTER
- COMBINATION STARTER (SIZE AS INDICATED)
- PANELBOARD SURFACE MOUNTED
- PANELBOARD FLUSH MOUNTED
- CONNECTION POINT
- GROUNDING PLATE
- SD D — DUCT SMOKE DETECTOR
- SD H — HEAT DETECTOR
- SD I — IONIZATION SMOKE DETECTOR
- SD P — PHOTOELECTRIC SMOKE DETECTOR
- AV — AUDIBLE/VISIBLE APPLIANCE
- M — MANUAL PULL STATION
- ELR — END-OF-LINE RESISTOR
- FACP — FIRE ALARM CONTROL PANEL
- CEILING MOUNTED OCCUPANCY SENSOR
- WALL MOUNTED OCCUPANCY SENSOR
- WALL SWITCH OCCUPANCY SENSOR
- P — POWER PACK FOR OCCUPANCY SENSOR

FIXTURE SCHEDULE

TYPE	TYPE NO	DESCRIPTION
	F1	2'x4', 2-LAMP STATIC TROFFER, PRISMATIC ACRYLIC LENS
	F1A	SAME AS F1, EXCEPT 3-LAMP
	F1B	SAME AS F1, EXCEPT 3-LAMP, 2 BALLASTS
	F2	4'-0", 2-LAMP STANDARD INDUSTRIAL FLUORESCENT FIXTURE WITH WIRE GUARD
	F3	1-LAMP, RECESSED, COMPACT FLUORESCENT DOWNLIGHT
	F4	4'-0", 1-LAMP STRIP, STANDARD CHANNEL FLUORESCENT FIXTURE
	F4A	SAME AS F4, EXCEPT 2'-0" LONG
	F5	8'-0", 1-LAMP, OUTDOOR FLUORESCENT SIGN FIXTURE
	F6	4'-0", 3-LAMP, WIDE BODY, WRAPAROUND FLUORESCENT FIXTURE
	F6A	SAME AS F6 EXCEPT W/EMERGENCY BATTERY PACK
	F6B	4'-0", 2-LAMP, NARROW BODY, WRAPAROUND FLUORESCENT FIXTURE
	F7	2'-0", 1-LAMP, UNDERCABINET, LOW PROFILE, FLUORESCENT FIXTURE
	F8	OUTDOOR, BUILDING MOUNTED, VANDAL RESISTANT FIXTURE, 70W HIGH PRESSURE SODIUM LAMP
	F9	2'-0", 1-LAMP, WALL MOUNT FLUORESCENT FIXTURE
	F10	OUTDOOR PARKING LOT LIGHT FIXTURE, 150W HIGH PRESSURE SODIUM LAMP, 20'-0" SQUARE STRAIGHT STEEL POLE
	F11	OUTDOOR, RECESSED FIXTURE, 50W HIGH PRESSURE SODIUM LAMP
	F12	2'x4', 3-LAMP PARABOLIC TROFFER, 18 CELLS
	F12A	SAME AS F12, EXCEPT 1'x4', 2 LAMP, 6 CELLS
	F13	4'-0", 2-LAMP, STAGGERED STRIP, FLUORESCENT FIXTURE
	F13A	SAME AS F13, EXCEPT 2'-0"
EXIT	F14	EXIT SIGN (SINGLE FACE)
	F14A	EXIT SIGN (DOUBLE FACE)
	F15	1'x4', 2-LAMP PARABOLIC TROFFER, 9 CELLS
	F16	NOT USED
	F17	FLAGPOLE FIXTURE, 100W MH WITH GUARD

REFERENCE SPECIFICATION SECTION 16000 FOR COMPLETE DESCRIPTION

GENERAL ELECTRICAL NOTE

1. FOR DRAWING LIST AND ABBREVIATIONS, SEE DWG I01.

CIRCUIT DESIGNATION

PPA -4, 3#10, 1#12G, 3/4"C

- CONDUIT SIZE
- WIRE SIZE
- NUMBER OF WIRES
- CIRCUIT NUMBER
- PANEL DESIGNATION

PANEL DESIGNATION

PPA

- A = 480/277 VOLT
- B = 208/120 VOLT
- C = 208/120 VOLT UPS
- PANEL
- L = LIGHTING
- P = POWER

NO.	DATE	PREPARED BY	CHECKED BY	APPROVED	ACCEPTED/CONTR APPROVED	DESCRIPTION OF REVISION
1	10/9/95	JAD	ANJ	ERP/RRW	FGR/JTS	REVISED PER AS-BUILT CONDITIONS

WFO / NEXRAD PROGRAM
PROJECT NO. 1001

PROGRAM MANAGEMENT SERVICES CONTRACTOR: FLUOR DANIEL GOULD EVANS ARCHITECTS, P.A. KANSAS CITY, MO. U.S.A.

SAFETY SHOULD ALWAYS BE FIRST WITH EVERY TASK YOU DO

DRAWN: A JOHNSON
CHECKED: C LEDGERWOOD
SUPV. ENGR.: T SUPER
ENGR/PROJ. MGR.: BLR/RRW
ACCPTR./CONTR.: EHM/JTS

SPECIAL ENGINEERING PROGRAM OFFICE (SEPO)

WEATHER FORECAST OFFICE
GREENVILLE/SPARTANBURG, SC

LEGEND AND FIXTURE SCHEDULE

044131-	SIZE 5	DWG. NO. E01	CLIN. 10	REV. 1

FDSP0043 KCOE011 JAD 10/05/95@09:04

NOTES

1. SEE DWG E10, DETAIL 4 FOR BONDING DETAIL.
2. SEE DRAWING E03 FOR PANEL SCHEDULES.
3. UNIT FURNISHED WITH DISCONNECT SWITCH BY MANUFACTURER. POWER WIRING CONNECTIONS BY CONTRACTOR. SEE DWG M06 FOR EQUIPMENT SCHEDULE.
4. SEE DRAWING E09 FOR PANEL SCHEDULE.
5. NEUTRAL SHALL BE GROUNDED AT PANELBOARD OR DISCONNECT SWITCH.
6. BOND NEUTRAL AND GROUND TOGETHER AT TRANSFORMER SECONDARY.
7. UTILITY TO FURNISH AND INSTALL METER SOCKET. CONTRACTOR TO INSTALL 1" PVC CONDUIT FROM UTILITY TRANSFORMER TO METER SOCKET LOCATION.

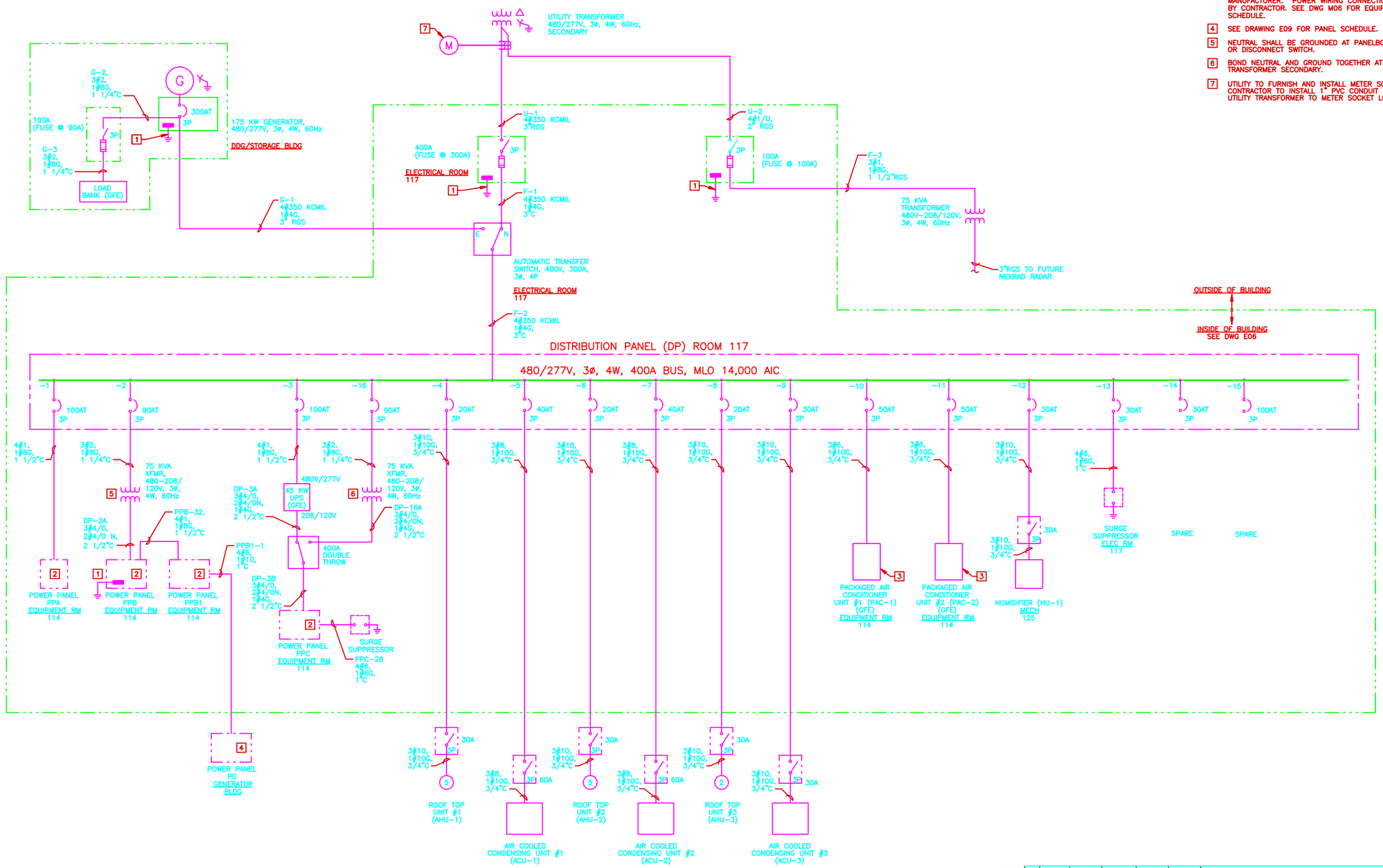

NO.	DATE	PREPARED BY	CHECKED BY	RS APPROVED	ACOR/CORR APPROVED	DESCRIPTION OF REVISION
1	10/9/95	JAD	ANJ	ERP/RRW	FGR/JTS	REVISED PER AS-BUILT CONDITIONS

WFO / NEXRAD PROGRAM
PROJECT NO. 1001

PROGRAM MANAGEMENT SERVICES CONTRACTOR
FLUOR DANIEL
GOULD EVANS ARCHITECTS, P.A.
KANSAS CITY, MO. U.S.A.

SAFETY SHOULD ALWAYS BE FIRST WITH EVERY TASK YOU DO

SEPO

DRAWN: A JOHNSON
CHECKED: D LEDGERWOOD
SUP'V. ENGR.: T. SUPER
ENGR./PROJ. MGR.: BLR/RRW
ACOR./CORR.: EAM/JTS

SPECIAL ENGINEERING PROGRAM OFFICE (SEPO)

WEATHER FORECAST OFFICE
GREENVILLE/SPARTANBURG, SC

ONE-LINE DIAGRAM

044131-	SIZE 5	DWG. NO. E02	CLIN. 10	REV. 1

FDS90043 KC0E021 JAD 10/05/95@09:08

VOLTS 480/277V PANEL "PPA" MAINS 225A MLO
PHASE 3ø LOCATION EQUIPMENT RM 114 FEEDER DP-1
WIRE 4W , 14,000 AIC

DESCRIPTION	BKR	CKT	POLE			POLE	CKT	BKR	DESCRIPTION
FAN TERMINAL UNIT (FTU-1) OPERATIONS	20	1	1			2			
			3			4	2	20	CONDENSER #1, (C-1)
			5			6			
FAN TERMINAL UNIT (FTU-2) STORAGE	20	3	7			8			
			9			10	4	20	CONDENSER #2, (C-2)
			11			12			
FAN TERMINAL UNIT (FTU-3) CORRIDOR	20	5	13			14	6	20	LTG, DDG/STORAGE BUILDING
			15			16	8	20	EH-1, VEST
			17			18	10	20	EH-2, SERV VEST
FAN TERMINAL UNIT (FTU-5) RECEPTION	20	7	19			20	12	20	LTG, EXTERIOR
			21			22	14	20	LTG, INTERIOR NORTH
			23			24	16	20	LTG, INTERIOR CENTER
FAN TERMINAL UNIT (FTU-4), RCPTN	20	9	25			26	18	20	LTG, INTERIOR SOUTH
FAN TERMINAL UNIT (FTU-6), OFFICE	20	11	27			28	20	20	EWH, STORAGE
FAN TERMINAL UNIT (FTU-7), MIC	20	13	29			30	22	20	SPARE
SPACE			31			32	24	20	SPARE
SPACE			33			34	26	20	SPARE
SPACE			35			36	28	20	SPARE
SPACE			37			38	30	20	SPARE
SPACE			39			40	32	20	SPARE
SPACE			41			42	34	20	SPARE

VOLTS 208/120V PANEL "PPB" MAINS 225A MCB
PHASE 3ø LOCATION EQUIPMENT RM 114 FEEDER DP-2A
WIRE 4W , 10,000 AIC

DESCRIPTION	BKR	CKT	POLE			POLE	CKT	BKR	DESCRIPTION
RCPTS, EQUIP, OPER, OUTSIDE	20	1	1			2	2	20	RCPTS, CUBICLE, OPER RM
RCPTS, OPER, OUTSIDE	20	3	3			4	4	20	RCPTS, CUBICLE, OPER RM
RCPTS, SOO, CORR, OPER	20	5	5			6	6	20	RCPTS, CUBICLE, OPER RM
RCPTS, MULTI-PURP, SOO, CORR	20	7	7			8	8	20	RCPTS, CUBICLE, OPER RM
MICROWAVE, READY RM	20	9	9			10	10	20	RCPTS, ELEC TECH, READY RM, EQUIP
APPLIANCE, READY RM	20	11	11			12	12	20	RCPTS, EQUIP, ELEC RM
RCPTS, COMM	20	13	13			14	14	20	REFR, READY ROOM
RCPT, ELEC TECH, BENCH	20	15	15			16	16	20	RCPTS, ELEC TECH, CORR, OUTSIDE
RCPT, ELEC TECH, BENCH	20	17	17			18	18	20	RCPTS, OFFICE, RCPTN
RCPT, ELEC TECH, BENCH	20	19	19			20	20	20	RCPTS, OFFICE, MIC, CORR
RCPT, ELEC TECH, BENCH	20	21	21			22	22	20	RCPTS, STOR, MEN, EWC, WOMEN
DOOR ENTRY & DOORBELL XFMRS	20	23	23			24	24	20	RCPTS, FILE/COPY, CORR, OUTSIDE
EF-1, WOMEN	20	25	25			26	26	20	DAMPER MOTORS
REMOTE CONTROL BOX	20	27	27			28	28	20	RCPTS, ROOF
RCPT, CUBICLE, ELEC TECH	20	29	29			30	30	20	SPARE
RCPT, CUBICLE, ELEC TECH	20	31	31			32			
FUTURE WATER SOFTENER	20	33	33			34	32	80	POWER PANEL 'PPB1'
RCPTS, CUBICLE, MIC, RCPTN	20	35	35			36			
TF-2, ELEC RM	20	37	37			38			
FIRE ALARM CONTROL PANEL	20	39	39			40	34	80	FUTURE AWIPS ANTENNA HEATER
SPARE	20	41	41			42			

VOLTS 208/120V PANEL "PPC" MAINS 225A MCB
PHASE 3ø LOCATION EQUIPMENT RM 114 FEEDER DP-3A
WIRE 4W , 10,000 AIC

DESCRIPTION	BKR	CKT	POLE			POLE	CKT	BKR	DESCRIPTION
RCPTS, RCPTN, MIC, OFFICE	20	1	1			2			
PLUGMOLD COMM RM	20	3	3			4	2	20	FUTURE RPGOP
PLUGMOLD COMM RM	20	5	5			6			
RCPTS, COMM RM	20	7	7			8			
TERMINAL BOX #1	20	9	9			10	4	30	FUTURE RPG
TERMINAL BOX #1	20	11	11			12			
TERMINAL BOX #1 (AWIPS)	20	13	13			14	6	20	FUTURE UCP
TERMINAL BOX #1 (AWIPS)	20	15	15			16	8	20	FUTURE RPGOP WKSTA
TERMINAL BOX #1 (AWIPS)	20	17	17			18	10	20	FUTURE EQUIPMENT
TERMINAL BOX #1 (AWIPS)	20	19	19			20	12	20	TERMINAL BOX #2
TERMINAL BOX #1	30	21	21			22	14	20	TERMINAL BOX #2
TERMINAL BOX #1	30	23	23			24	16	20	TERMINAL BOX #2 (AWIPS)
TERMINAL BOX #3 (AWIPS)	20	25	25			26	18	20	TERMINAL BOX #2 (AWIPS)
TERMINAL BOX #3 (AWIPS)	20	27	27			28	20	20	TERMINAL BOX #2 (AWIPS)
TERMINAL BOX #3 (AWIPS)	20	29	29			30	22	20	TERMINAL BOX #2 (AWIPS)
TERMINAL BOX #3 (AWIPS)	20	31	31			32	24	30	TERMINAL BOX #2
TERMINAL BOX #3	30	33	33			34	26	30	TERMINAL BOX #2
TERMINAL BOX #3	30	35	35			36			
TERMINAL BOX #3	30	37	37			38	28	30	SURGE SUPPRESSOR
TERMINAL BOX #3	30	39	39			40			
SPARE	20	41	41			42	30	20	TEMP CONTROL COMPONENTS

VOLTS 208/120V PANEL "PPB1" MAINS 100A MLO
PHASE 3ø LOCATION EQUIPMENT RM 114 FEEDER PPB-32
WIRE 4W , 10,000 AIC

DESCRIPTION	BKR	CKT	POLE			POLE	CKT	BKR	DESCRIPTION
PANEL 'PG'	50	1	1			2			
			3			4	2	30	FUTURE RPG
			5			6			
FUTURE RPGOP WSTA	20	3	7			8			
FUTURE UCP	20	5	9			10	4	20	FUTURE RPGOP
TCU-1	20	7	11			12			
			13			14	6	20	SPARE
SPACE			15			16	8	20	SPARE
SPACE			17			18	10	20	SPARE

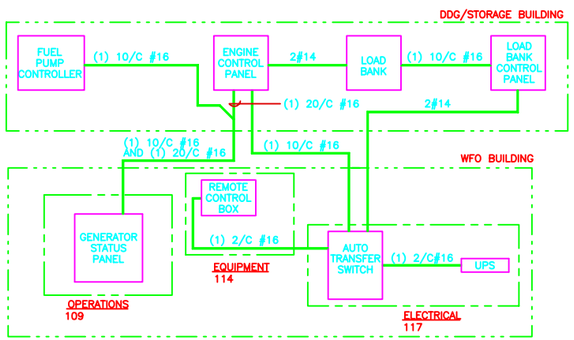

GENERATOR CONTROL DIAGRAM

NOTE: SEE ONAN DRAWING 630-1463.

FROM		TO	
PAC (REMOTE CONTROL BOX)	TB-84	TS-TB3-23	AUTOMATIC TRANSFER SWITCH (SEE ONAN DWG 630-1463)
	TB-85	TS-TB3-25	
UPS	TB-X2-6	TS-TB3-20	AUTOMATIC TRANSFER SWITCH (SEE ONAN DWG 630-1463)
	TB-X2-8	TS-TB3-22	
TEMPERATURE CONTROL SYSTEM	*	TS-TB1-2	AUTOMATIC TRANSFER SWITCH (SEE ONAN DWG 630-1463)
	*	TS-TB1-3	
LOAD BANK CONTROL PANEL	TB-3	TS-TB3-29	AUTOMATIC TRANSFER SWITCH (SEE ONAN DWG 630-1463)
	TB-4	TS-TB3-30	

(*) COORDINATE TERMINATIONS WITH TEMPERATURE CONTROL MANUFACTURER

NOTE
1. FOR ADDITIONAL INFORMATION, SEE ONAN DRAWINGS 612-6538 AND 300-3623.

ATS INTERCONNECTION TABLE

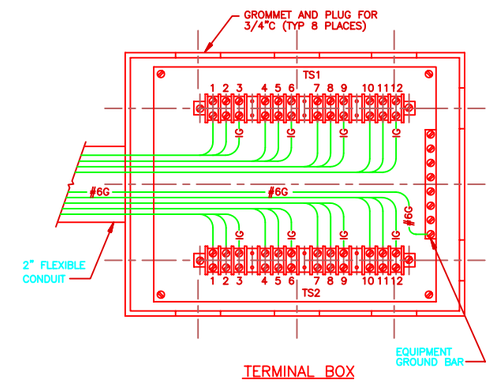

TERMINAL BOX

DETAIL 1 E08
SCALE: NONE

TERMINAL BOX #1

TERMINAL #	CIRCUIT #	WIRE SIZE
TS1-1,2,3	PPC-9,20A,1P	2 #10, 1#10G
TS1-4,5,6	PPC-11,20A,1P	2 #10, 1#10G
TS1-7,8,9	PPC-13,20A,1P	2 #10, 1#10G
TS1-10,11,12	PPC-15,20A,1P	2 #10, 1#10G
TS2-1,2,3	PPC-17,20A,1P	2 #10, 1#10G
TS2-4,5,6	PPC-19,20A,1P	2 #10, 1#10G
TS2-7,8,9	PPC-21,30A,1P	2 #8, 1#10G
TS2-10,11,12	PPC-23,30A,1P	2 #8, 1#10G

TERMINAL BOX #2

TERMINAL #	CIRCUIT #	WIRE SIZE
TS1-1,2,3	PPC-12,20A,1P	2 #10, 1#10G
TS1-4,5,6	PPC-14,20A,1P	2 #10, 1#10G
TS1-7,8,9	PPC-16,20A,1P	2 #10, 1#10G
TS1-10,11,12	PPC-18,20A,1P	2 #10, 1#10G
TS2-1,2,3	PPC-20,20A,1P	2 #10, 1#10G
TS2-4,5,6	PPC-22,20A,1P	2 #10, 1#10G
TS2-7,8,9	PPC-24,30A,1P	2 #8, 1#10G
TS2-10,11,12	PPC-26,30A,1P	2 #8, 1#10G

TERMINAL BOX #3

TERMINAL #	CIRCUIT #	WIRE SIZE
TS1-1,2,3	PPC-25,20A,1P	2 #10, 1#10G
TS1-4,5,6	PPC-27,20A,1P	2 #10, 1#10G
TS1-7,8,9	PPC-29,20A,1P	2 #10, 1#10G
TS1-10,11,12	PPC-31,20A,1P	2 #10, 1#10G
TS2-1,2,3	PPC-33,30A,1P	2 #8, 1#10G
TS2-4,5,6	PPC-35,30A,1P	2 #8, 1#10G
TS2-7,8,9	PPC-37,45A,1P	2 #6, 1#10G
TS2-10,11,12	PPC-39,45A,1P	2 #6, 1#10G

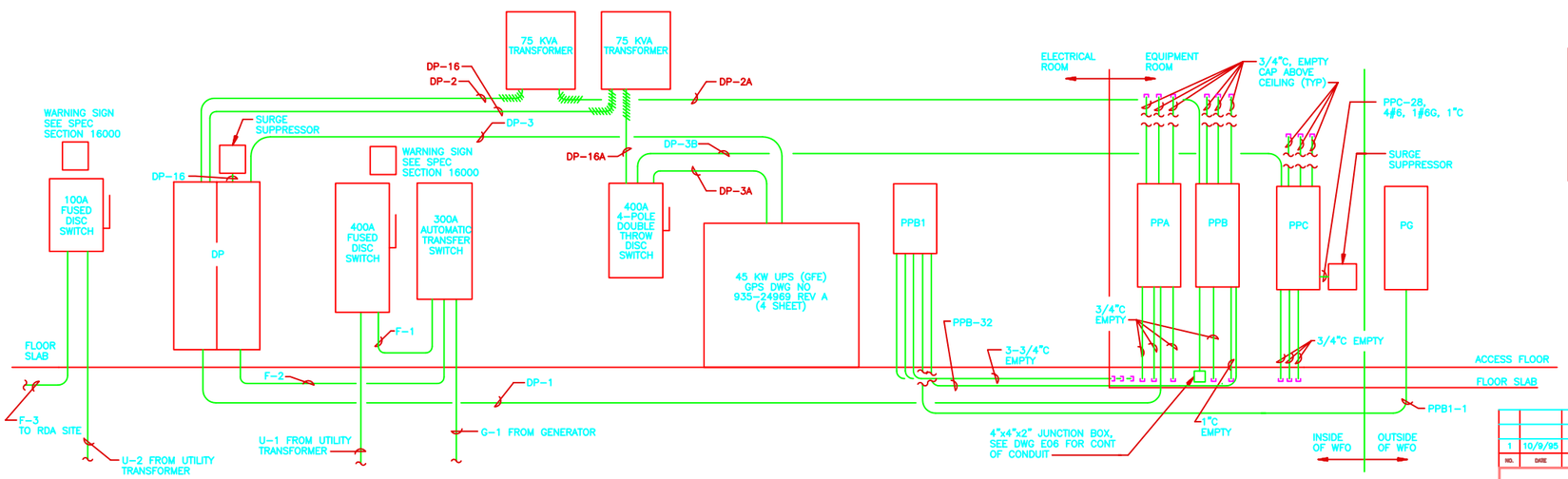

ELECTRICAL RISER DIAGRAM

DETAIL 2 E06
SCALE: NONE

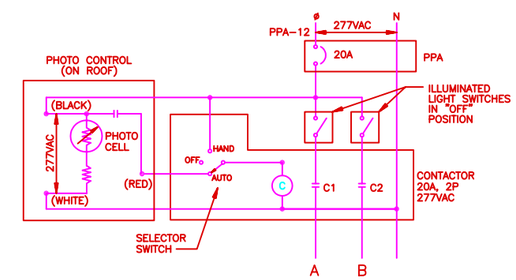

A	PARKING LOT LIGHTS FLAGPOLE LIGHT
B	WFO BUILDING SOFFIT AND SIGN LIGHTS, DDG/STOR BLDG EXTERIOR LIGHTS

EXTERIOR LIGHTING CONTROL DIAGRAM

SCALE: NONE

NO.	DATE	PREPARED BY	CHECKED BY	PEI APPROVED	ACOR/CORR APPROVED	DESCRIPTION OF REVISION
1	10/9/95	JAD	ANJ	ERP/RRW	FGR/JTS	REVISED PER AS-BUILT CONDITIONS

WFO / NEXRAD PROGRAM
PROJECT NO. 1001

PROGRAM MANAGEMENT SERVICES CONTRACTOR
FLUOR DANIEL
GOULD EVANS ARCHITECTS, P.A.
KANSAS CITY, MO. U.S.A.

SAFETY SHOULD ALWAYS BE FIRST WITH EVERY TASK YOU DO

DRAWN A JOHNSON
CHECKED G LEDGERWOOD
SUP'V. ENGR. T SUPER
ENGR/PROJ. MGR. BLK/RRW
ACOR'R/CORR. EPM/JTS

SPECIAL ENGINEERING PROGRAM OFFICE (SEPO)
WEATHER FORECAST OFFICE
GREENVILLE/SPARTANBURG, SC
PANELBOARDS, SCHEMATICS AND CONTROL DIAGRAMS

SIZE	DWG. NO.	CLIN.	REV.
044131- 5	E03	10	1

FDSP0043 KCIDE031 JAD 10/05/95@09:13

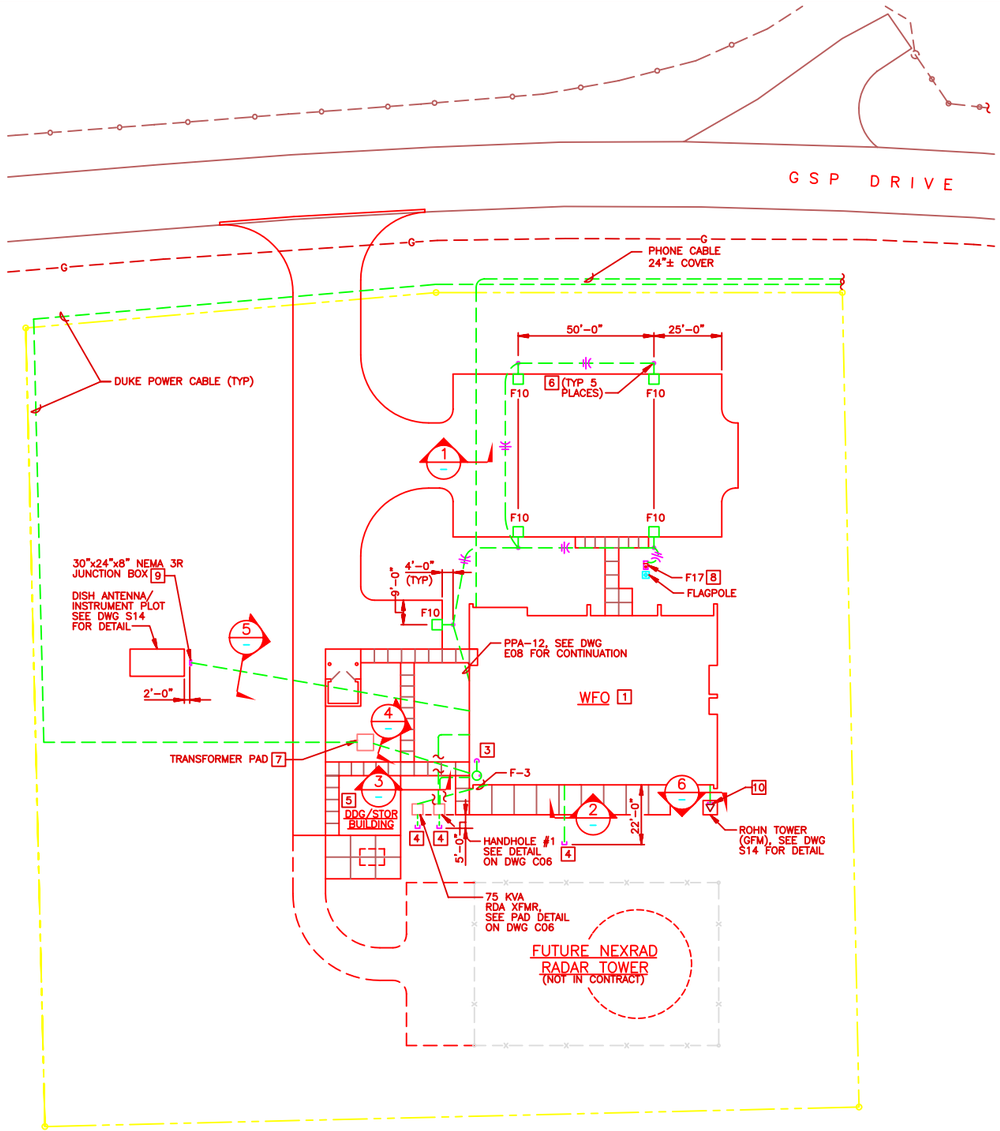

ELECTRICAL SITE PLAN
SCALE: 1"=20'

GRID NORTH BUILDING NORTH

NOTES

1. INSTALL LIGHTNING PROTECTION SYSTEM PER SPECIFICATION SECTION 16000.
2. SEE SPECIFICATION SECTION 02210 FOR EARTHWORK.
3. SEE DWG E10, DETAIL 6, FOR PHOTOCELL MOUNTING DETAIL.
4. CAP AND STAKE CONDUIT FOR FUTURE USE WITH 4"x4" WOOD POST, 12" ABOVE FINISHED GRADE, PAINTED ORANGE.
5. SEE DWGS E06, E07, E09, AND E11 FOR CONDUITS BETWEEN THE WFO AND DDG/STORAGE BUILDING.
6. SEE DWG E10, DETAIL 5, FOR LIGHT POLE DETAIL.
7. SEE SPECIFICATION ATTACHMENT "F" FOR TRANSFORMER PAD DETAILS.
8. SEE DWG E10, DETAIL 1, FOR FLAGPOLE LIGHT DETAIL.
9. MOUNT TOP OF JUNCTION BOX 4'-0" ABOVE FINISHED GRADE ON 1 5/8"x1 5/8" GALVANIZED STEEL FRAMING CHANNELS. SEE DWG S14 FOR INSTRUMENT PLOT PLAN.
10. 30"x24"x8" NEMA 3R JUNCTION BOX, CLAMPED TO TOWER. EXTEND FLEX CONDUIT TO BOX FROM ROHN TOWER FOUNDATION.

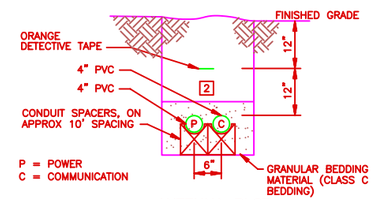

ANTENNA PLOT CONDUIT TRENCHING

SECTION 5
SCALE: NONE

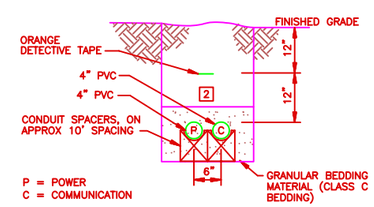

ROHN TOWER FROM WFO CONDUIT TRENCHING

SECTION 6
SCALE: NONE

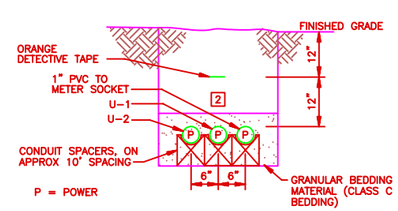

SERVICE ENTRANCE CONDUIT TRENCHING

SECTION 4
SCALE: NONE

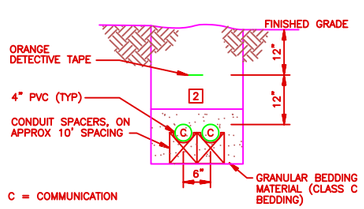

TELCO CONDUIT TRENCHING

SECTION 1
SCALE: NONE

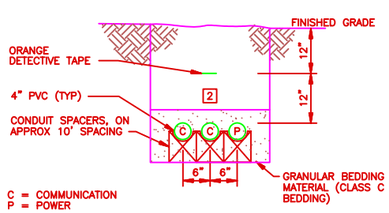

COMMUNICATIONS CONDUIT TRENCHING

SECTION 2
SCALE: NONE

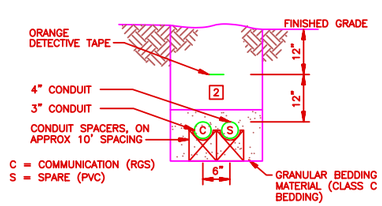

RDA FROM WFO CONDUIT TRENCHING

SECTION 3
SCALE: NONE

0 10' 20' 40' 60'
SCALE: 1"=20'

NO.	DATE	PREPARED BY	CHECKED BY	RS APPROVED	ACOE/CORPS APPROVED	DESCRIPTION OF REVISION
1	10/9/95	JAD	ANJ	ERP/RRW	FGR/JTS	REVISED PER AS-BUILT CONDITIONS

WFO / NEXRAD PROGRAM
PROJECT NO. 1001

PROGRAM MANAGEMENT SERVICES CONTRACTOR
FLUOR DANIEL
GOULD EVANS ARCHITECTS, P.A.
KANSAS CITY, MO. U.S.A.

SAFETY SHOULD ALWAYS BE FIRST WITH EVERY TASK YOU DO

SEPO

DRAWN A. JOHNSON
CHECKED S. LEDGERWOOD
SUP'V. ENGR. T. SUPER
ENGR/PROJ. MGR. BBL/RRW
ACOE/CORPS. ERM/JTS

SPECIAL ENGINEERING PROGRAM OFFICE (SEPO)

WEATHER FORECAST OFFICE
GREENVILLE/SPARTANBURG, SC

ELECTRICAL SITE PLAN

SIZE	DWG. NO.	CLIN.	REV.
044131-	5 E04	10	1

FDSP0043 KC0E041 JAD 10/05/95@09:25

NOTES

1. CONNECTION TO GROUND PLATE SHALL BE MADE WITH A MECHANICAL CONNECTOR.
2. BOND TO TUBE COLUMN, SEE DWG S11 FOR EXACT LOCATION.
3. GROUND TEST WELL FRAME AND COVER SHALL BE CASTINGS FABRICATED DROM GREY IRON CONFORMING TO ASTM A48. FRAME AND COVER SHALL BE SUITABLE FOR LIGHT TRAFFIC, CONCRETE SLAB APPLICATIONS. COVER SHALL BE NON-ROCKING AND SHALL BE LETTERED "ELECTRIC".
4. INSTALLATION SIMILAR TO DETAIL 2, THIS DRAWING.
5. COIL 6 FEET OF BARE COPPER WIRE. LEAVE COILED WIRE SIX INCHES BELOW GRADE FOR FUTURE CONNECTIONS BY OTHERS. STAKE COILED WIRE LOCATIONS WITH A 4"x4" WOOD POST, 12" ABOVE FINISHED GRADE, PAINTED ORANGE.
6. CONNECT #6 INSULATED COPPER GROUND WIRE TO TELCO GROUND BAR. COIL 5'-0" OF #6 GROUND WIRE AND LEAVE UNDER ACCESS FLOOR.

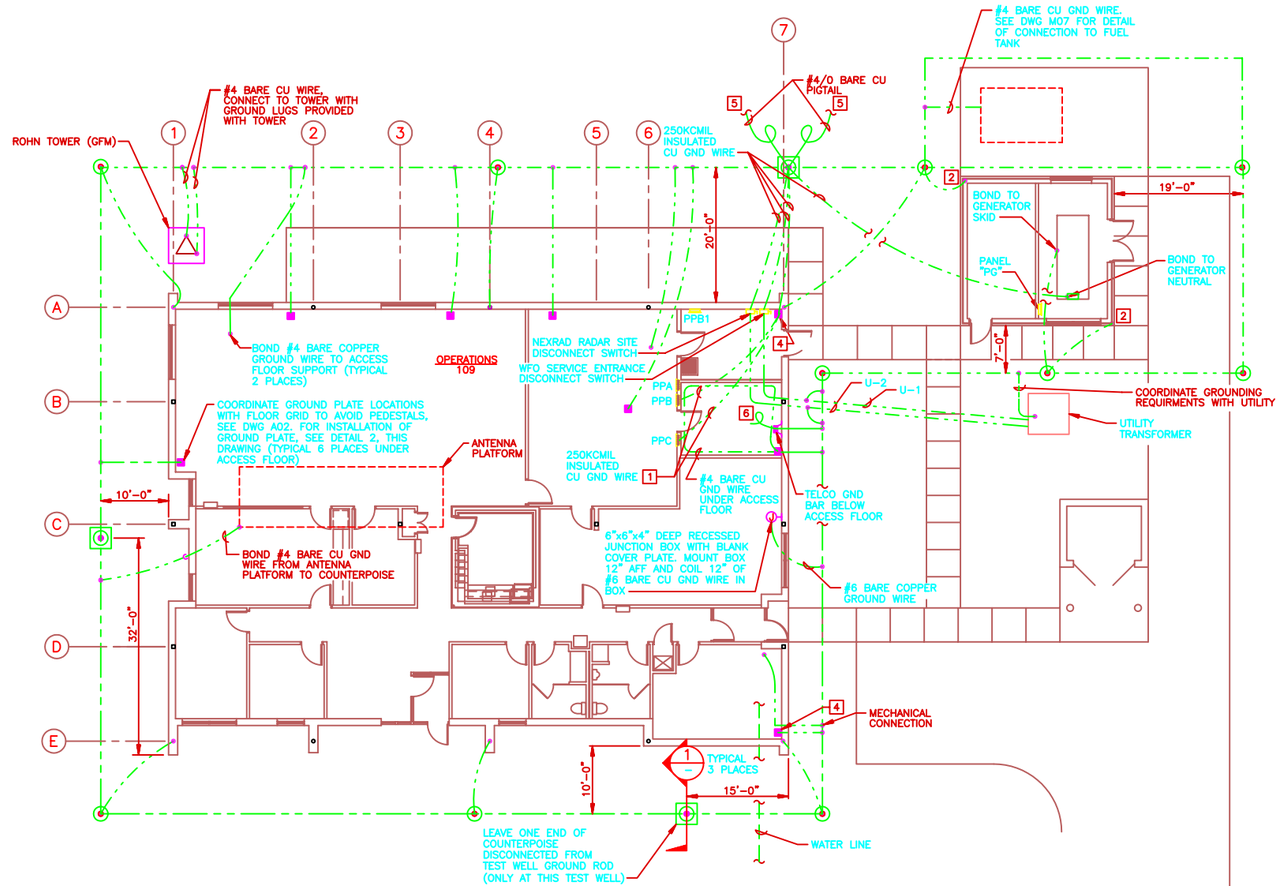

GROUNDING PLAN
SCALE: 1/8"=1'-0"

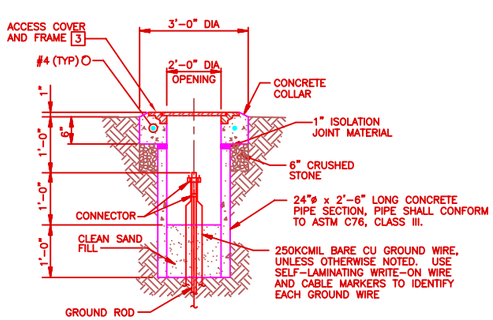

GROUND TEST WELL
SECTION 1
SCALE: NONE

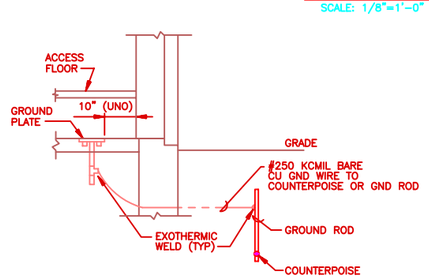

NOTE: PROVIDE 4 LUGS SIZED FOR #4 AWG STRANDED COPPER WIRE AND 4 BOLTS INSTALLED ON PLATE.

EQUIPMENT GROUNDING PLATE DETAIL
DETAIL 2
SCALE: NONE

0 4' 8' 16' 24'
SCALE: 1/8"=1'-0"

NO.	DATE	PREPARED BY	CHECKED BY	PDE APPROVED	ACOR/COTR APPROVED	DESCRIPTION OF REVISION
1	10/9/95	JAD	ANJ	ERP/RRW	FGR/JTS	REVISED PER AS-BUILT CONDITIONS

WFO / NEXRAD PROGRAM
PROJECT NO. 1001

PROGRAM MANAGEMENT SERVICES CONTRACTOR
FLUOR DANIEL
GOULD EVANS ARCHITECTS, P.A.
KANSAS CITY, MO. U.S.A.

SAFETY SHOULD ALWAYS BE FIRST WITH EVERY TASK YOU DO

DRAWN: A JOHNSON
CHECKED: C LEDGERWOOD
SUPV. ENGR.: T SUPER
ENGR/PROJ. MGR.: BLR/RRW
ACOR/COTR: EPM/JTS

SPECIAL ENGINEERING PROGRAM OFFICE (SEPO)

WEATHER FORECAST OFFICE
GREENVILLE/SPARTANBURG, SC
ELECTRICAL
GROUNDING PLAN

SIZE	DWG. NO.	CLIN.	REV.
044131-	5	E05	10	1

FDSP0043 KCKCE051 JAD 10/05/95@09:55

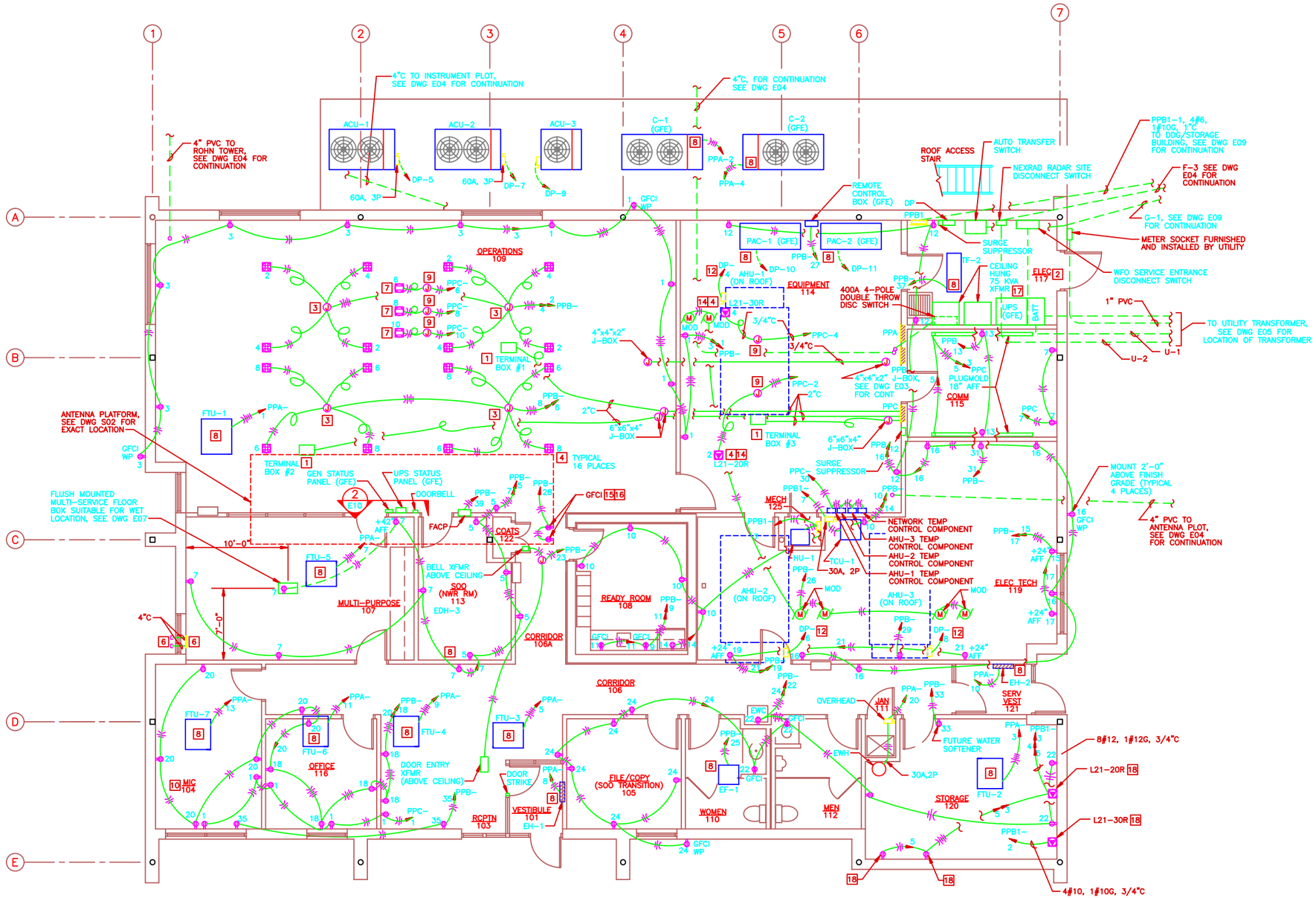

NOTES

1. TERMINAL BOX, LOCATED BELOW ACCESS FLOOR. SEE DETAIL 1, ON DWG E03.
2. SEE ELECTRICAL RISER DIAGRAM, DWG E03 FOR WIRE AND CONDUIT ROUTING.
3. MOUNT 10"x10"x6" JUNCTION BOX ON UNISTRUT TO FLOOR UNDER ACCESS FLOOR.
4. RECEPTACLE AND BOX WITH 10'-0" OF FLEXIBLE CONDUIT UNDER ACCESS FLOOR (NOT ATTACHED TO FLOOR) AND LEFT APPROXIMATELY IN POSITION SHOWN ON DRAWING.
5. NOT USED
6. PROVIDE A 12"x12" HINGED ACCESS DOOR FOR THE (2) 4" CONDUITS THROUGH WALL. EACH 4"C SHALL BE CAPPED ON THE EXTERIOR AND MADE WEATHERPROOF. THE EXTERIOR CAPS SHALL BE PERMANENTLY AFFIXED TO THE BUILDING EXTERIOR VIA A CORROSION RESISTANT CHAIN.
7. RECEPTACLE AND BOX WITH 20'-0" OF FLEXIBLE CONDUIT UNDER ACCESS FLOOR (NOT ATTACHED TO FLOOR) AND LEFT APPROXIMATELY IN POSITION SHOWN ON DRAWING.
8. UNIT FURNISHED WITH DISCONNECT SWITCH AND/OR MAGNETIC STARTER (IF REQUIRED) BY MANUFACTURER. POWER WIRING CONNECTIONS BY CONTRACTOR. SEE DWG M06 FOR EQUIPMENT SCHEDULE.
9. MOUNT JUNCTION BOX ON UNISTRUT TO FLOOR UNDER ACCESS FLOOR.
10. PROVIDE TEN FURNITURE CONNECTORS, EIGHT SHOWN AS IN DETAIL 3A AND TWO AS SHOWN IN DETAIL 3B ON DRAWING E10. STORE CONNECTORS IN MIC OFFICE.
11. SMOKE DETECTOR FOR AHU-1 & AHU-2 ARE IN SIMILAR LOCATIONS, SEE DWG M04 FOR UNIT LOCATIONS.
12. ROUTE CONDUITS THROUGH ROOF CURBS.
13. SEE DWG E11 FOR RISER DIAGRAM AND GENERAL NOTES.
14. PAINT LOCKING RECEPTACLE J-BOX RED.
15. MOUNT TWO DUPLEX GFCI RECEPTACLES IN WEATHER PROOF ENCLOSURES ON ANTENNA PLATFORM HANDRAIL 12" ABOVE PLATFORM. SEE STRUCTURAL DWG S13 FOR HANDRAIL LOCATION AND DETAIL.
16. ROUTE ALL CONDUITS FOR ANTENNA PLATFORM THROUGH PIPE PENETRATION CURB. SEE DWG M03 FOR LOCATION.
17. BRACING AND SUPPORT OF CEILING HUNG TRANSFORMERS SHALL BE PER LOCAL CODE REQUIREMENTS. MOUNT BOTTOM OF TRANSFORMERS 10'-0" AFF.
18. SURFACE MOUNT RECEPTACLE.

POWER PLAN

SCALE: 1/4"=1'-0"

BUILDING NORTH

SCALE: 1/4"=1'-0"

NO.	DATE	PREPARED BY	CHECKED BY	RSI APPROVED	ACOR/COTR APPROVED	DESCRIPTION OF REVISION
1	10/9/95	JAD	ANJ	ERP/RRW	FGR/JTS	REVISED PER AS-BUILT CONDITIONS

WFO / NEXRAD PROGRAM
PROJECT NO. 1001

PROGRAM MANAGEMENT SERVICES CONTRACTOR
FLUOR DANIEL
GOULD EVANS ARCHITECTS, P.A.
KANSAS CITY, MO. U.S.A.

SAFETY SHOULD ALWAYS BE FIRST WITH EVERY TASK YOU DO

DRAWN A. JOHNSON
CHECKED C. LEDGERWOOD
SUPV. ENGR. T. SUPER
ENGR/PROJ. MGR. BLR/RRW
ACOR/COTR EHM/JTS

SPECIAL ENGINEERING PROGRAM OFFICE (SEPO)

WEATHER FORECAST OFFICE
GREENVILLE/SPARTANBURG, SC

ELECTRICAL POWER PLAN

SIZE	DWG. NO.	CLIN.	REV.
044131- 5	E06	10	1

FDSP0043 KCOCE061 JAD 10/05/95@10:27

NOTES

1. PROVIDE CONDUIT WITH THREADED CAP. CAP SHALL BE FLUSH WITH FLOOR.
2. PROVIDE CONTROL CABLE PER MANUFACTURERS RECOMMENDATIONS.
3. ROUTE ALL CONDUITS FOR ANTENNA PLATFORM THROUGH PIPE PENETRATION CURB. SEE DWG M03 FOR LOCATION.

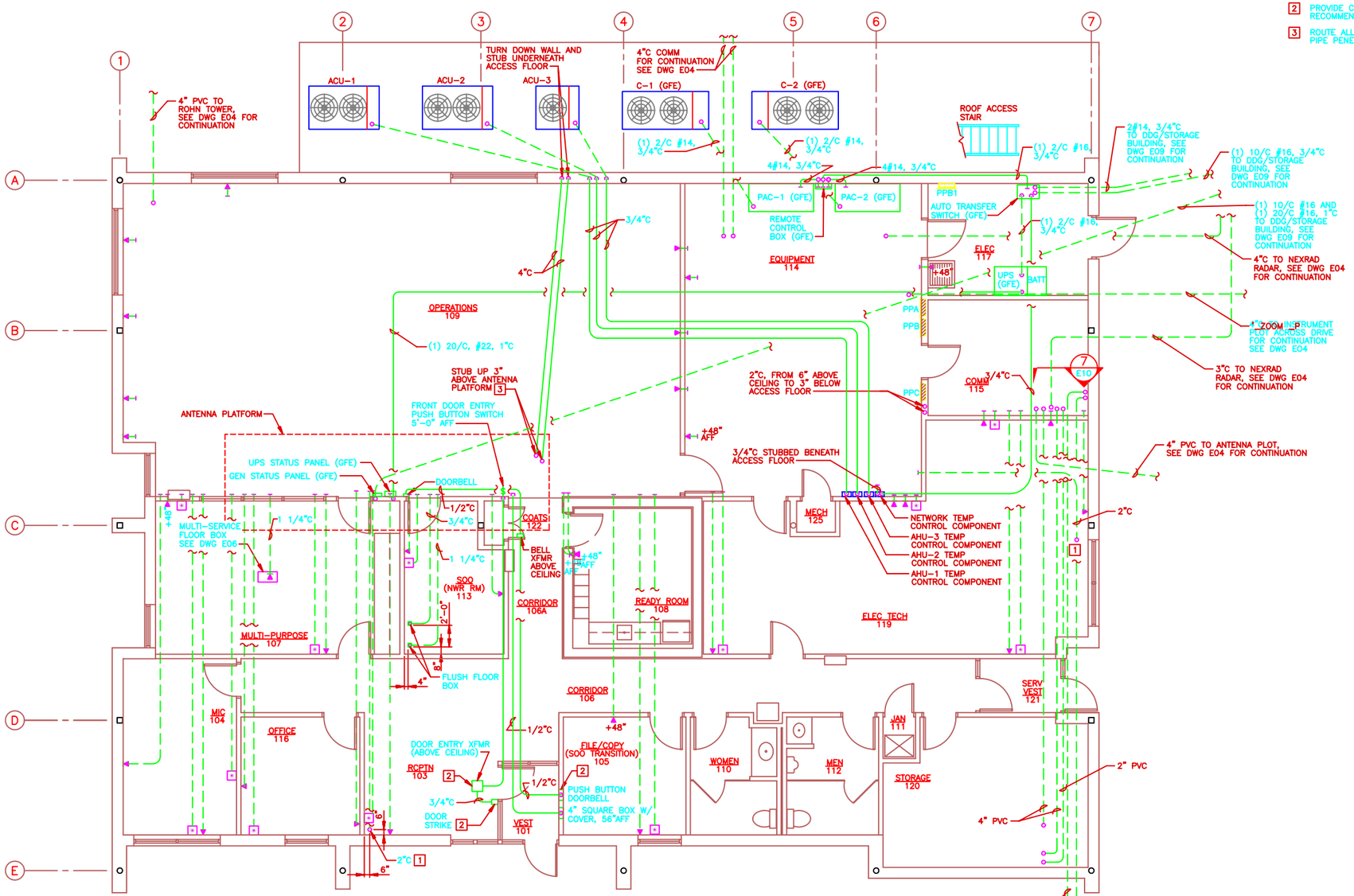

COMMUNICATION AND CONTROLS PLAN
SCALE: 1/4"=1'-0"

SCALE: 1/4"=1'-0"

NO.	DATE	PREPARED BY	CHECKED BY	RSI APPROVED	ACOR/COTR APPROVED	DESCRIPTION OF REVISION
1	10/9/95	JAD	ANJ	ERP/RRW	FGR/JTS	REVISED PER AS-BUILT CONDITIONS

WFO / NEXRAD PROGRAM
PROJECT NO. 1001

PROGRAM MANAGEMENT SERVICES CONTRACTOR
FLUOR DANIEL
GOULD EVANS ARCHITECTS, P.A.
KANSAS CITY, MO. U.S.A.

SAFETY SHOULD ALWAYS BE FIRST WITH EVERY TASK YOU DO

DRAWN: A. JOHNSON
CHECKED: D. LEDGERWOOD
SUP'V. ENGR: T. SUPER
ENGR/PROJ. MGR: BLN/RRW
ACOR/COTR: ERM/JTS

SPECIAL ENGINEERING PROGRAM OFFICE (SEPO)

WEATHER FORECAST OFFICE
GREENVILLE/SPARTANBURG, SC

COMMUNICATIONS AND CONTROLS PLAN

044131-	5	E07	10	1
	SIZE	DWG. NO.	CLIN.	REV.

FD3P0043 KCQE071 JAD 10/09/95807:38

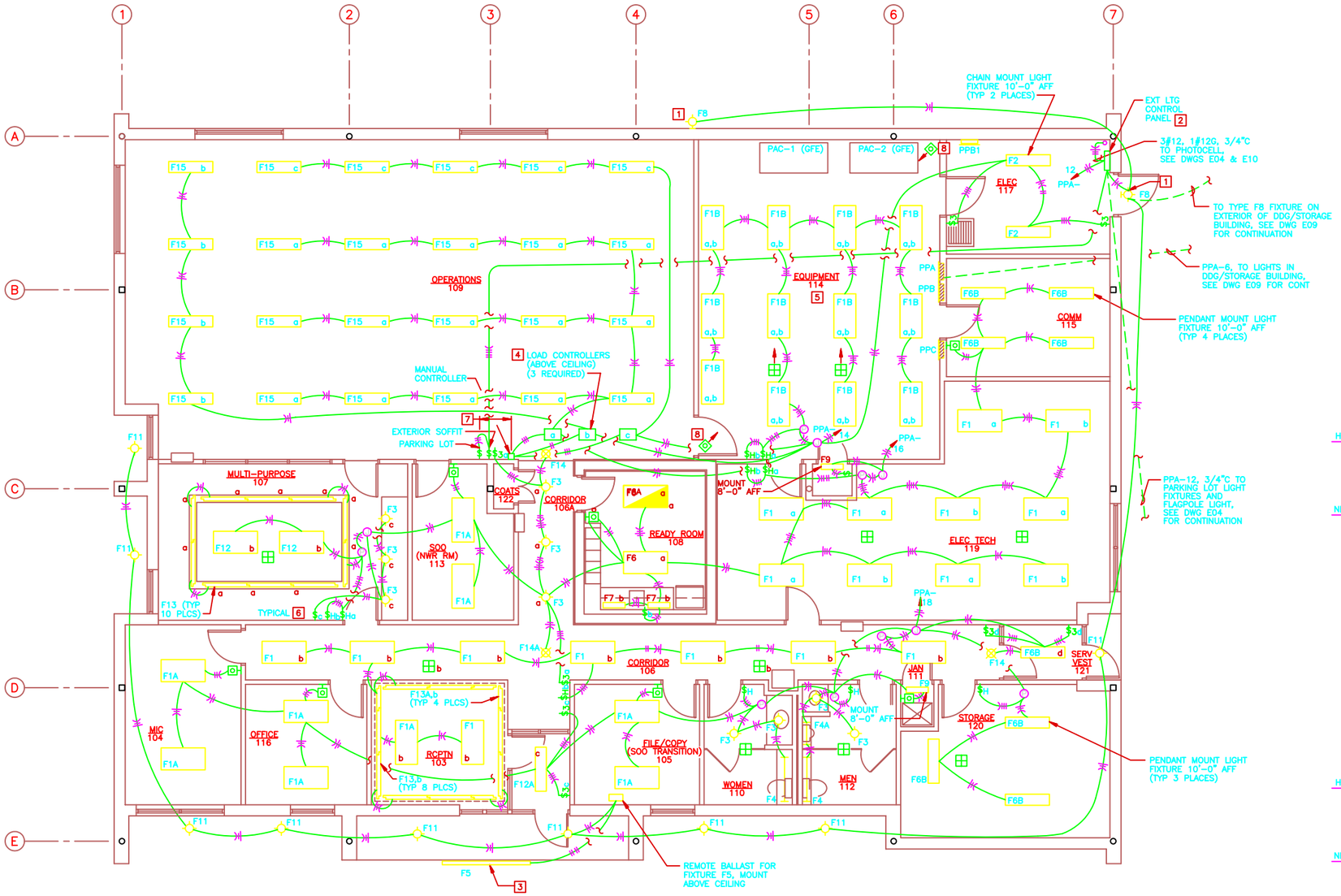

NOTES

1. SEE DWG A03 FOR FIXTURE ELEVATION.
2. SEE DRAWING E03 FOR EXTERIOR LIGHTING CONTROL DIAGRAM.
3. SEE DRAWING A03 FOR EXACT LOCATION OF F5 FIXTURE OVER NOAA LOGO SIGN.
4. PROVIDE PLENUM-RATED CONTROL CABLE PER MANUFACTURER'S RECOMMENDATIONS.
5. LIGHT FIXTURES IN EQUIPMENT ROOM TO HAVE INBOARD, OUTBOARD SWITCHING. SWITCH A, CENTER LAMP; SWITCH B, TWO OUTSIDE LAMPS.
6. GANG LIGHT SWITCHES.
7. MOUNT EXTERIOR LIGHT SWITCHES, FRONT DOOR ENTRY SWITCH (SEE DWG E07) AND MANUAL CONTROLLER IN A MINIMUM AMOUNT OF SPACE.
8. MOUNT AS CLOSE TO CEILING AS POSSIBLE.

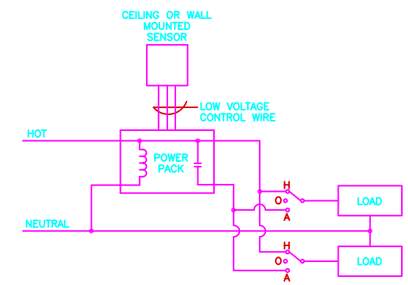

OCCUPANCY SENSOR WIRING DIAGRAM-DUAL LEVEL

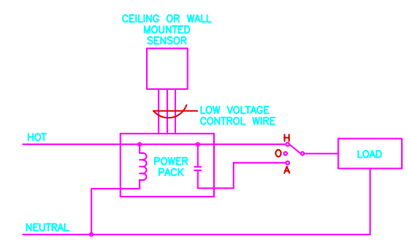

OCCUPANCY SENSOR WIRING DIAGRAM

LIGHTING PLAN
SCALE: 1/4"=1'-0"

BUILDING NORTH

0 2' 4' 8' 12'
SCALE: 1/4"=1'-0"

NO.	DATE	PREPARED BY	CHECKED BY	FOR APPROVED	ACTN/CONT APPROVED	DESCRIPTION OF REVISION
1	10/9/95	JAD	ANJ	ERP/RRW	FGR/JTS	REVISED PER AS-BUILT CONDITIONS

WFO / NEXRAD PROGRAM
PROJECT NO. 1001

PROGRAM MANAGEMENT SERVICES CONTRACTOR
FLUOR DANIEL
GOULD EVANS ARCHITECTS, P.A.
KANSAS CITY, MO. U.S.A.

SAFETY SHOULD ALWAYS BE FIRST WITH EVERY TASK YOU DO

DRAWN: A. JOHNSON
CHECKED: S. LEDGERWOOD
SUP'V. ENGR: T. SUPER
ENGR/PROJ. MGR: BLR/RRW
ACCPT/CONTR: EHM/JTS

SPECIAL ENGINEERING PROGRAM OFFICE (SEPO)

WEATHER FORECAST OFFICE
GREENVILLE/SPARTANBURG, SC
ELECTRICAL LIGHTING PLAN

044131-	SIZE 5	DWG. NO. E08	CLR. 10	REV. 1

FDSP0043 KCKGE081 JAD 10/09/95@07:46

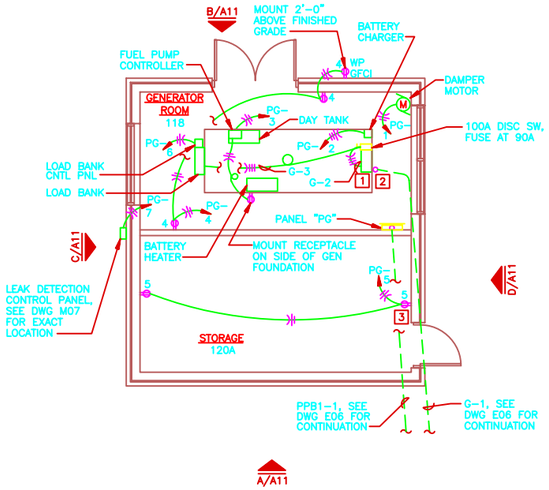

POWER PLAN
SCALE: 1/4"=1'-0"

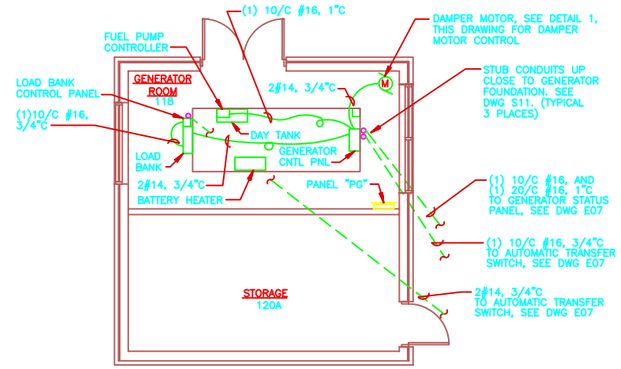

COMMUNICATION PLAN
SCALE: 1/4"=1'-0"

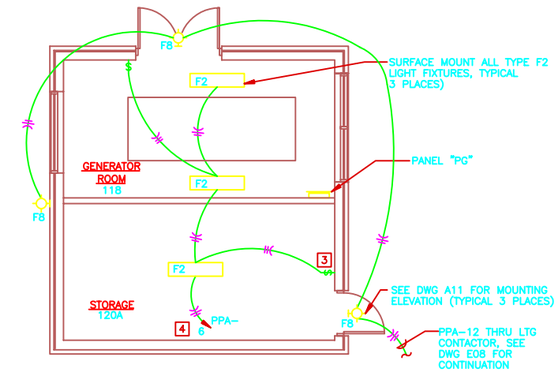

LIGHTING PLAN
SCALE: 1/4"=1'-0"

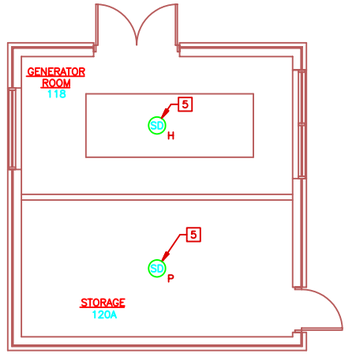

FIRE DETECTION PLAN
SCALE: 1/4"=1'-0"

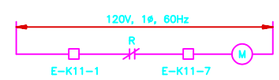

DAMPER MOTOR CONTROL DIAGRAM

DETAIL 1
SCALE: NONE

NOTE: SEE ONAN DRAWING 630-1463.

NOTES

1. CONNECT LOAD BANK TO LOAD SIDE OF MAIN CIRCUIT BREAKER.
2. CURRENT TRANSFORMER (PROVIDED BY LOAD BANK MANUFACTURER) TO BE MOUNTED IN GENERATOR CONTROL PANEL. INSTALL ON PHASE A OF CIRCUIT G-1. FOR ADDITIONAL INFORMATION SEE AVTRON DRAWINGS K711D22706 AND D22714.
3. MOUNT LIGHT SWITCH AND DUPLEX RECEPTACLE IN SEPARATE OUTLET BOX WITH ONE COVERPLATE FOR TOGGLE SWITCH AND DUPLEX RECEPTACLE.
4. PANEL PPA LOCATED IN WFO, EQUIP RM, SEE DWG E08.
5. SEE DWG E11 FOR RISER DIAGRAM AND GENERAL NOTES.

GENERAL DDG/STORAGE BUILDING NOTES

1. FOR DRAWING LIST AND ABBREVIATIONS, SEE DWG I01.
2. CONDUIT STUB UP LOCATIONS SHALL BE VERIFIED BY CONTRACTOR PRIOR TO INSTALLATION.
3. SEE DWG E03 FOR GENERATOR CONTROL DIAGRAM.

VOLTS 208/120V — POWER PANEL "PG" — MAINS 50A MCB
PHASE 3ø — LOCATION GENERATOR ROOM — FEEDER PPB1-1
WIRE 4W, 10,000 AIC

DESCRIPTION	BKR	CKT	POLE			POLE	CKT	BKR	DESCRIPTION
DAMPER MOTOR	20	1	1	+	+	2			
FUEL PUMP, DAY TANK HTR, BATT HTR	20	3	3	+	+	4	2	20	BATTERY CHARGER, ENGINE HEATER
RCPTS, STORAGE	20	5	5	+	+	6	4	20	RCPTS, GENERATOR ROOM, EXTERIOR
LEAK DETECTION CONTROL PANEL	20	7	7	+	+	8	6	20	LOAD BANK CONTROL PANEL
SPARE	20	9	9	+	+	10	8	20	SPARE
SPARE	20	11	11	+	+	12	10	20	SPARE
SPACE	–	–	13	+	+	14	–	–	SPACE
SPACE	–	–	15	+	+	16	–	–	SPACE
SPACE	–	–	17	+	+	18	–	–	SPACE

0 2' 4' 8' 12'
SCALE: 1/4"=1'-0"

NO.	DATE	PREPARED BY	CHECKED BY	RDI APPROVED	ACTA/CCER APPROVED	DESCRIPTION OF REVISION
1	10/9/95	JAD	ANJ	ERP/RRW	FGR/JTS	REVISED PER AS-BUILT CONDITIONS

WFO / NEXRAD PROGRAM
PROJECT NO. I001

PROGRAM MANAGEMENT SERVICES CONTRACTOR
FLUOR DANIEL
GOULD EVANS ARCHITECTS, P.A.
KANSAS CITY, MO. U.S.A.

SAFETY SHOULD ALWAYS BE FIRST WITH EVERY TASK YOU DO

SEPO

DRAWN A JOHNSON
CHECKED G LEDGERWOOD
SUP'V. ENGR. T SUPER
ENGR/PROJ. MGR. BLR/RRW
ACCPTR./CCER. EPM/JTS

SPECIAL ENGINEERING PROGRAM OFFICE (SEPO)
WEATHER FORECAST OFFICE
GREENVILLE/SPARTANBURG, SC
ELECTRICAL
DDG/STORAGE BUILDING

SIZE	DWG. NO.	CLIN.	REV.
044131- 5	E09	I0	1

FDSP0043 KCDED91 JAD 10/09/95@07:50

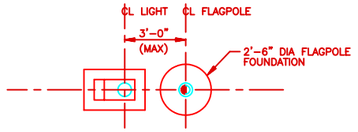

PLAN – PROPOSED ARRANGEMENT
SCALE: NONE

BUILDING NORTH

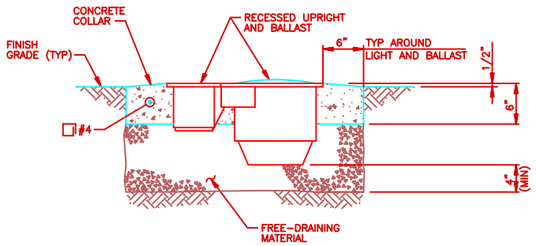

FLAGPOLE LIGHT DETAIL
SCALE: NONE

DETAIL 1 / E04

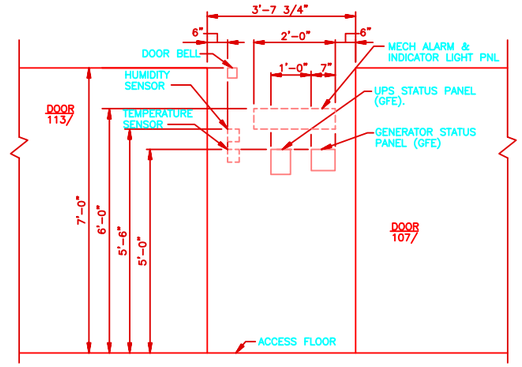

SECTION 2 / E06
SCALE: NONE

NOTE: SEE DWG M03 FOR LOCATION OF EQUIPMENT WITH DASHED LINES.

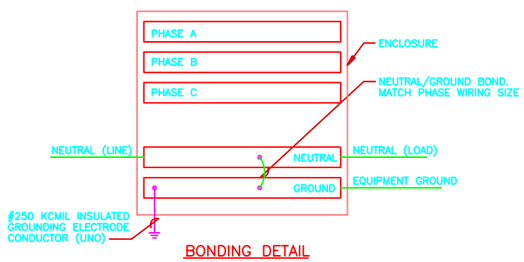

BONDING DETAIL

DETAIL 4 / E02
SCALE: NONE

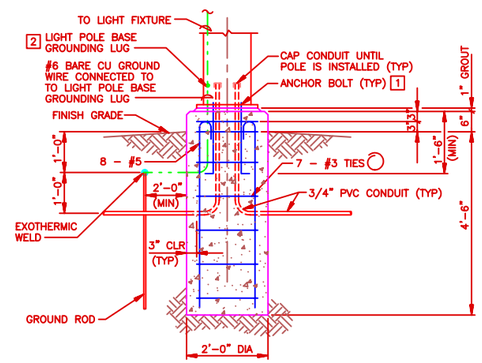

LIGHT POLE DETAIL

DETAIL 5 / E04
SCALE: NONE

NOTES

1. ANCHOR BOLTS SHALL BE DESIGNED AND FURNISHED BY THE LIGHT POLE MANUFACTURER. ANCHOR BOLTS PROVIDED SHALL BE GALVANIZED.
2. BOND INCOMING EQUIPMENT GROUNDING CONDUCTOR TO LIGHT POLE BASE GROUNDING LUG.

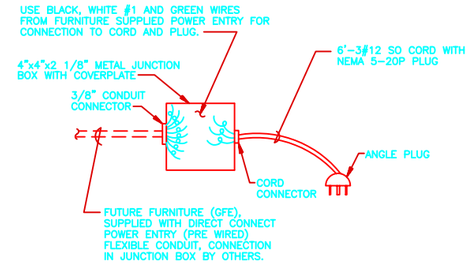

ELECTRICAL CONNECTION FOR FURNITURE

DETAIL 3A / E06
SCALE: NONE

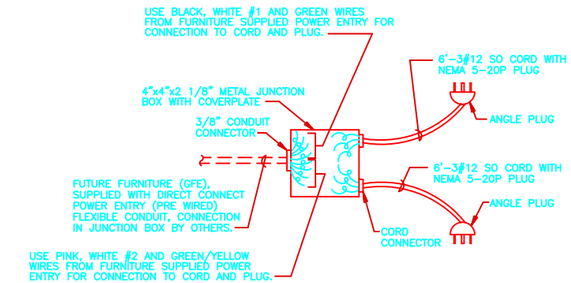

ELECTRICAL CONNECTION FOR FURNITURE

DETAIL 3B / E06
SCALE: NONE

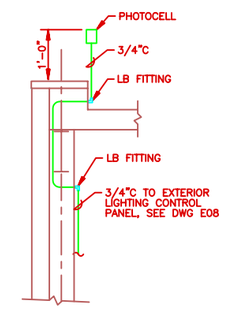

PHOTOCELL MOUNTING DETAIL

DETAIL 6 / E04 E08
SCALE: NONE

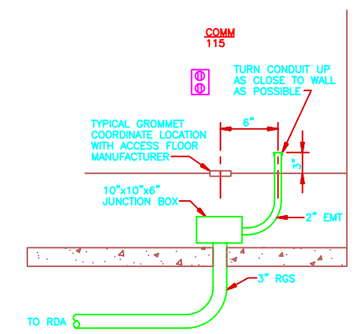

SECTION 7 / E07
SCALE: NONE

NO.	DATE	PREPARED BY	CHECKED BY	RS APPROVED	ACOR/CORR APPROVED	DESCRIPTION OF REVISION
1	10/9/95	JAD	ANJ	ERP/RRW	FGR/JTS	REVISED PER AS-BUILT CONDITIONS

WFO / NEXRAD PROGRAM
PROJECT NO. 1001

PROGRAM MANAGEMENT SERVICES CONTRACTOR
FLUOR DANIEL GOULD EVANS ARCHITECTS, P.A.
KANSAS CITY, MO. U.S.A.

SAFETY SHOULD ALWAYS BE FIRST WITH EVERY TASK YOU DO

SEPO

DRAWN: A. JOHNSON
CHECKED: D. LEDGERWOOD
SUP'V. ENGR.: T. SUPER
ENGR/PROJ. MGR.: BLR/RRW
ACOR/CORR: EAM/JTS

SPECIAL ENGINEERING PROGRAM OFFICE (SEPO)

WEATHER FORECAST OFFICE
GREENVILLE/SPARTANBURG, SC
ELECTRICAL SECTIONS AND DETAILS

044131–	SIZE 5	DWG. NO. E10	CLIN. 10	REV. 1

FDS90043 KCOE101 JAD 10/09/95@07:57

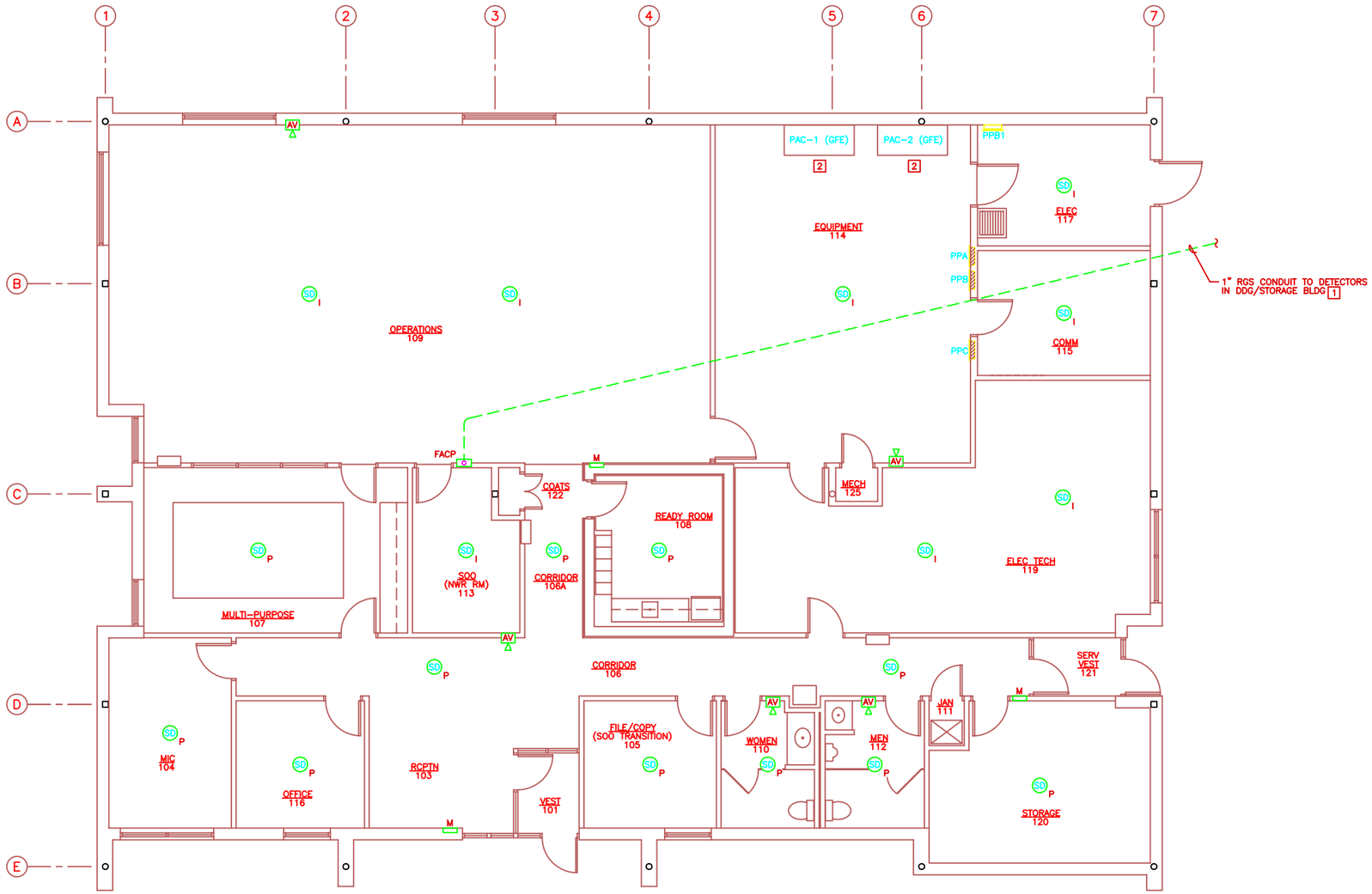

FIRE DETECTION PLAN
SCALE: 1/4"=1'-0"

BUILDING NORTH

GENERAL NOTES

1. COORDINATE LOCATION OF SMOKE DETECTORS WITH LIGHT FIXTURES AND ANY OTHER INTERFERENCES.
2. SEE REFERENCE DWG A10, SCHEDULES, FOR CEILING TYPE IN EACH ROOM.

NOTES

1. SEE DWG E09 FOR DETECTORS IN DDG/STORAGE BUILDING.
2. FIRE STATS PROVIDED WITH AND LOCATED WITHIN PAC-1,2 (GFE).
3. SEE DWG E06 FOR LOCATION OF DUCT SMOKE DETECTOR. DUCT SMOKE DETECTOR PROVIDED WITH MECHANICAL EQUIPMENT.

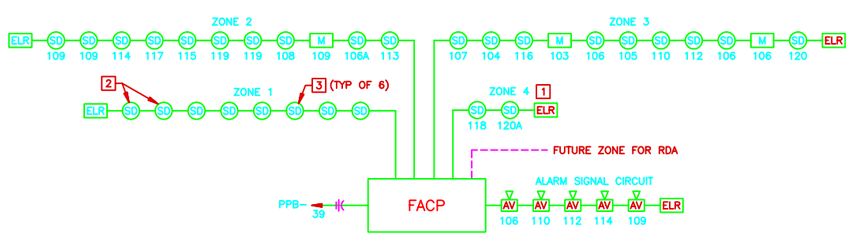

FIRE DETECTION RISER DIAGRAM

0 2' 4' 8' 12'
SCALE: 1/4"=1'-0"

NO.	DATE	PREPARED BY	CHECKED BY	FOR APPROVAL	ACCEPTANCE APPROVED	DESCRIPTION OF REVISION
1	10/9/95	JAD	ANJ	ERP/RRW	FGR/JTS	REVISED PER AS-BUILT CONDITIONS

WFO / NEXRAD PROGRAM
PROJECT NO. I001

PROGRAM MANAGEMENT SERVICES CONTRACTOR
FLUOR DANIEL
GOULD EVANS ARCHITECTS, P.A.
KANSAS CITY, MO. U.S.A.

SAFETY SHOULD ALWAYS BE FIRST WITH EVERY TASK YOU DO

SEPO

DRAWN: A. JOHNSON
CHECKED: Z. LEDGERWOOD
SUP'V. ENGR: T. SUPER
ENGR/PROJ. MGR.: BLR/RRW
ACCEPT. PERS.: EKM/JTS

SPECIAL ENGINEERING PROGRAM OFFICE (SEPO)

WEATHER FORECAST OFFICE
GREENVILLE/SPARTANBURG, SC

FIRE DETECTION PLAN

044131-	SIZE 5	DWG. NO. E11	CLIN. 10	REV. 1

FDSP0043 KC0E110 JAD 10/09/95@08:05

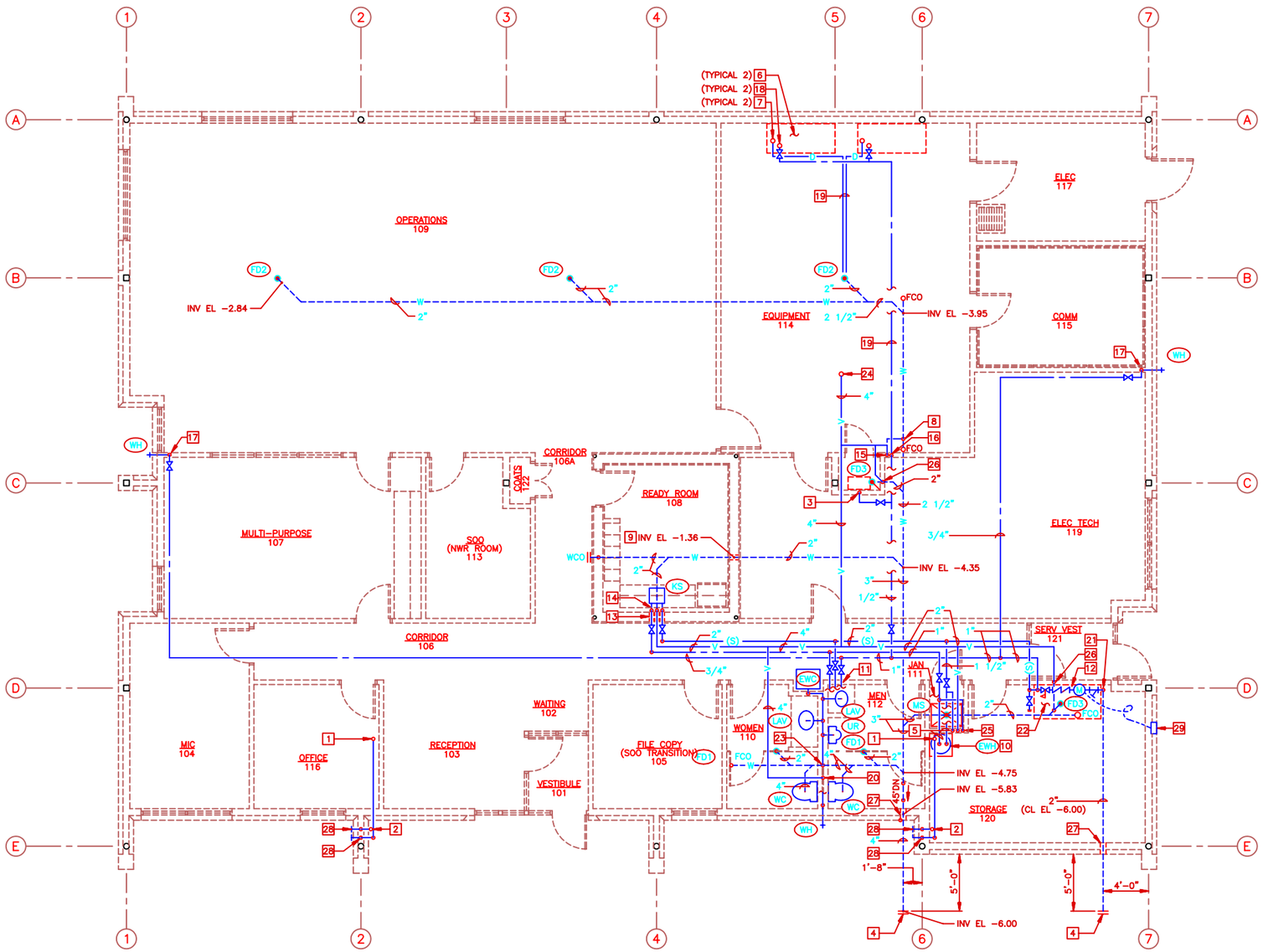

GENERAL PLUMBING NOTES

1. FOR DRAWING LIST AND ABBREVIATIONS, SEE DWG I01.
2. PIPE ELEVATIONS ARE REFERENCED TO A FINISHED FLOOR ELEVATION OF 0'-0".
3. THE PLUMBING SYSTEM FOR THIS BUILDING IS DESIGNED FOR A MAXIMUM OF 20 PEOPLE.

PLUMBING PLAN NOTES

1. 4" SD UP TO OVERFLOW DRAIN.
2. 4" SD UP TO ROOF DRAIN.
3. 1/2"CW DOWN TO HUMIDIFIER (HU-1). SEE COLD AND HOT WATER RISER DIAGRAM (DWG M02), AND HUMIDIFIER PIPING DETAIL (DWG M04), FOR CONTINUATION.
4. SEE SITE PLAN, DWG C02 FOR CONTINUATION.
5. 1"CW(S), 1"HW TO WATER HEATER. SEE ELECTRIC WATER HEATER DETAIL, DWG M02.
6. PACKAGED AIR CONDITIONING UNIT (PAC-1, 2).
7. 3/4" DRAIN CONNECTED TO PAC UNIT. ROUTE TO FLOOR DRAIN.
8. RUNNING P-TRAP WITH FLOOR CLEANOUT
9. PROVIDE PIPE SLEEVE IN FOUNDATION WALL.
10. ELECTRIC WATER HEATER SHOWN HERE FOR CLARITY. INSTALL ABOVE CEILING OVER JANITOR CLOSET (111), AND CONNECT PIPING AS SHOWN IN DETAIL ON DWG M02.
11. 3/4"CW, 1 1/2"CW(S), 3/4"HW DOWN IN WALL. SEE COLD AND HOT WATER RISER DIAGRAM, DWG M02 FOR CONTINUATION.
12. INCOMING WATER SERVICE PIPING MUST BE INSTALLED IN MINIMUM FLOOR SPACE POSSIBLE. PLACE ALL SHUT OFF VALVES IN VERTICAL RISERS (SEE DETAIL, DWG M02).
13. PROVIDE PIPE SLEEVES IN CONCRETE WALL.
14. 1/2"CW(S), 1/2"HW, 1 1/2"V DOWN, WITH 2"W TO SINK.
15. 2"V DOWN IN WALL TO RUNNING P-TRAP.
16. 1/2"CW DOWN IN WALL.
17. 3/4"CW DOWN IN WALL TO WALL HYDRANT.
18. CONNECT 1/2"CW TO PACKAGED AIR CONDITIONING UNIT (PAC-1, 2).
19. ROUTE PIPING ON CHANNEL WITH HOLDING CLIPS ON CONCRETE SLAB, BELOW ACCESS FLOOR.
20. 4"V DOWN IN WALL.
21. 2"CW UP THROUGH FLOOR. LOCATE TO MISS FOOTING.
22. INDICATES LOCATION OF FUTURE WATER TREATMENT.
23. 2 1/2"W DOWN THROUGH FLOOR.
24. 4"V UP, 4"VTR
25. 3/4"CW(S), 3/4"HW, 2"V DOWN TO MOP SINK. CENTER FAUCET OVER SINK ON BACK WALL.
26. 2"V DOWN IN WALL TO FLOOR DRAIN.
27. PROVIDE PIPE SLEEVE IN THICKENED FOOTING.
28. 4" SD DOWN TO DOWNSPOUT NOZZLE. MOUNT NOZZLE 12" AFF.
29. REMOTE READOUT FOR WATER METER. INSTALL IN EXTERIOR WALL 5'-6" AFF.

PLUMBING PLAN
SCALE: 1/4"=1'-0"

BUILDING NORTH

0 2' 4' 8' 12'
SCALE: 1/4"=1'-0"

NO.	DATE	PREPARED BY	CHECKED BY	RM APPROVED	ACTR/CCTR APPROVED	DESCRIPTION OF REVISION
1	10/9/95	JAD	SXM	ERP/RRW	FGR/JTS	REVISED PER AS-BUILT CONDITIONS

WFO / NEXRAD PROGRAM
PROJECT NO. I001

PROGRAM MANAGEMENT SERVICES CONTRACTOR
FLUOR DANIEL
GOULD EVANS ARCHITECTS, P.A.
KANSAS CITY, MO. U.S.A.

SAFETY SHOULD ALWAYS BE FIRST WITH EVERY TASK YOU DO

DRAWN R. L. ANDREWS
CHECKED M. MEYER
SUPV. ENGR. DALE FULCHER
ENGR/PROJ. MGR. BLR/RRW
ACCTR/CCTR. ERM/JTS

SPECIAL ENGINEERING PROGRAM OFFICE (SEPO)
WEATHER FORECAST OFFICE
GREENVILLE/SPARTANBURG, SC
PLUMBING PLAN

SIZE	DWG. NO.	CLIN.	REV.
044131- 5	M01	I0	1

FDSP0043 KCOM011 JAD 10/03/95@11:31

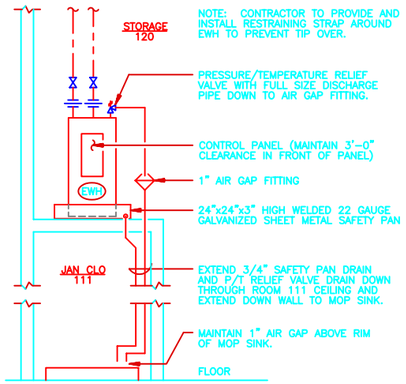

WATER HEATER DETAIL
SCALE: NONE

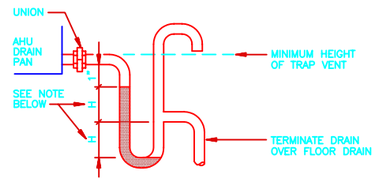

NOTE:
"H" EQUALS THE NEGATIVE ESP ON DRAW-THRU UNITS.

COIL TRAP DETAIL
(DRAW-THRU UNIT)
SCALE: NONE

PLUMBING FIXTURE SCHEDULE

ITEM	FIXTURE	MINIMUM ROUGH-IN SIZES (INCH) HW	CW	V	W	REMARKS
WC	WATER CLOSET	–	1/2"	2"	4"	
UR	URINAL	–	3/4"	1 1/2"	2"	
LAV	LAVATORY	1/2"	1/2"	1 1/2"	1 1/2"	
MS	MOP SINK	3/4"	3/4"	1 1/2"	3"	
KS	KITCHEN SINK	1/2"	1/2"	1 1/2"	1 1/2"	
FD	FLOOR DRAIN	–	–	1 1/2"	2"	
EWC	ELECTRIC WATER COOLER	–	1/2"	1 1/2"	1 1/2"	
WH	NON-FREEZE WALL HYDRANT	–	3/4"	–	–	

PLUMBING LEGEND & SYMBOLS

- COLD WATER (CW)
- HOT WATER (HW)
- (S) SOFTENED WATER (S)
- PIPING BELOW FLOOR
- V VENT (V)
- D DRAIN (D)
- W SOIL OR WASTE (W)
- SHUT-OFF VALVE
- CHECK VALVE
- BACKFLOW PREVENTER
- STRAINER
- PRESSURE REDUCING VALVE
- UNION
- AIR GAP FITTING
- VACUUM RELIEF
- PRESSURE/TEMPERATURE RELIEF VALVE
- M WATER METER (NOT USED)
- WATER HAMMER ARRESTOR
- WCO WALL CLEANOUT
- FCO FLOOR CLEANOUT
- VTR VENT THRU ROOF
- FIXTURE DESIGNATION
- A REFERENCE POINT FOR PIPE CONTINUATION

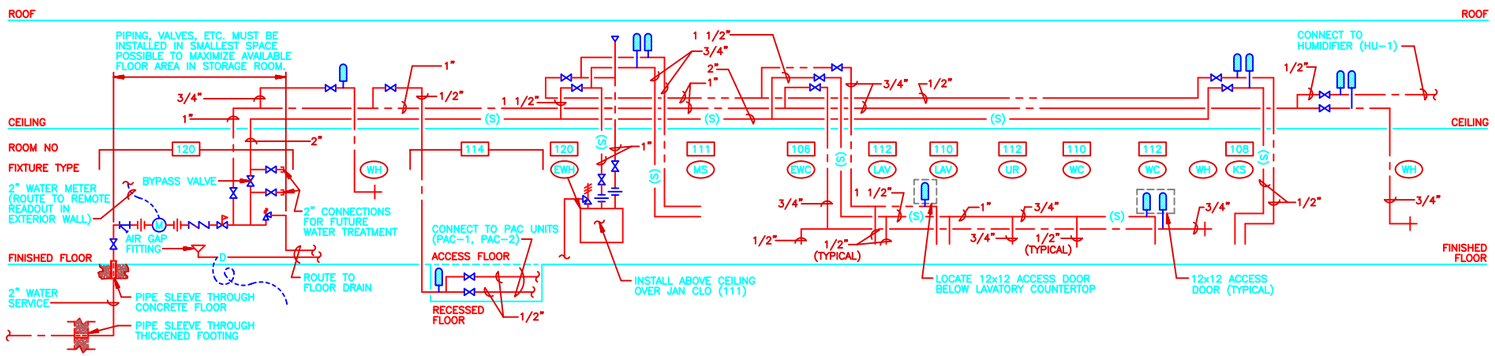

COLD & HOT WATER RISER DIAGRAM
SCALE: NONE

PLUMBING EQUIPMENT

- EWC ELECTRIC WATER COOLER RATED 7.6 GPH OF 50°F WATER WHEN SUPPLIED WITH 80°F WATER AND 90°F AMBIENT TEMPERATURE, 120V/1PH.
- EWH ELECTRIC WATER HEATER RATED 3.0 KW, 20 GALLON STORAGE, 12 GAL/HR RECOVERY AT 100°F TEMPERATURE RISE, 277V/1PH.

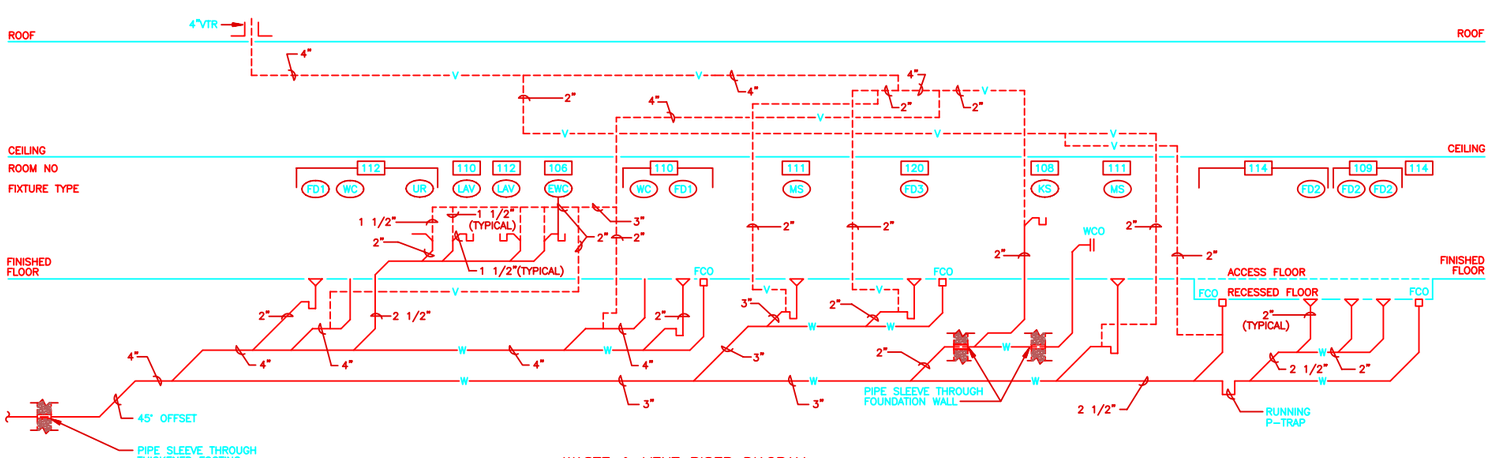

WASTE & VENT RISER DIAGRAM
SCALE: NONE

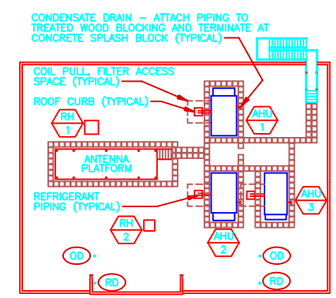

ROOF PLAN
SCALE: 1/16"=1'-0"

BUILDING NORTH

SCALE: 1/16"=1'-0"

NO.	DATE	PREPARED BY	CHECKED BY	ENG APPROVED	ACR/CORR APPROVED	DESCRIPTION OF REVISION
1	10/9/95	JAD	SXM	ERP/RRW	FGR/JTS	REVISED PER AS-BUILT CONDITIONS

WFO / NEXRAD PROGRAM
PROJECT NO. 1001

PROGRAM MANAGEMENT SERVICES CONTRACTOR
FLUOR DANIEL
GOULD EVANS ARCHITECTS, P.A.
KANSAS CITY, MO. U.S.A.

SAFETY SHOULD ALWAYS BE FIRST WITH EVERY TASK YOU DO

SEPO

DRAWN R. L. ANDREWS
CHECKED M. MEYER
SUPV. ENGR. DALE FULCHER
ENGR/PROJ. MGR. BLR/RRW
ACCOR. PORTR. EKM/JTS

SPECIAL ENGINEERING PROGRAM OFFICE (SEPO)

WEATHER FORECAST OFFICE
GREENVILLE/SPARTANBURG, SC

PLUMBING DETAILS AND SCHEDULES

044131–	SIZE 5	DWG. NO. M02	CLIN. 10	REV. 1

FDSP0043 KOM021 JAD 10/03/95@11:39

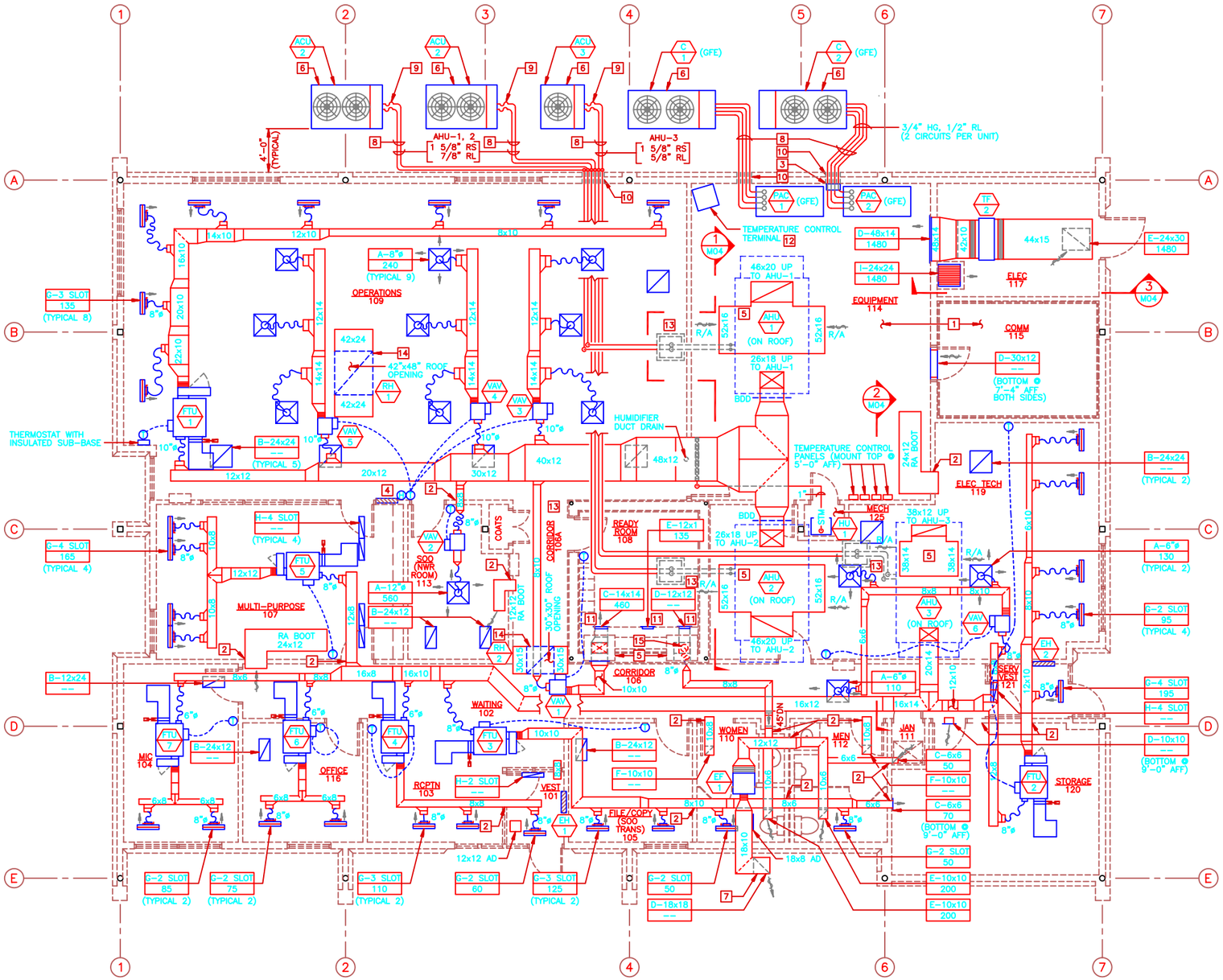

HVAC PLAN
SCALE: 1/4"=1'-0"

BUILDING NORTH

GENERAL HVAC NOTES

1. FOR DRAWING LIST AND ABBREVIATIONS, SEE DWG I01.
2. COORDINATE DIFFUSER LOCATIONS AND CEILING TYPES WITH THE ARCHITECTURAL REFLECTED CEILING PLAN (DWG A06).

HVAC PLAN NOTES

1. PROVIDE 12 PERFORATED FLOOR PANELS. INSTALL 10 PANELS IN EQUIPMENT ROOM (114), AND 2 PANELS IN COMMUNICATIONS ROOM (115).
2. DUCT PENETRATION THROUGH SOUND WALL TO BE SEALED AIR TIGHT.
3. REMOTE CONTROL BOX (GFE). SEE PAC UNIT DETAIL, DWG M04.
4. RECESS MOUNTED ALARM AND INDICATOR LIGHTS PANEL. SEE WALL ELEVATION, DWG E10.
5. RETURN AIR BOOTS SHALL BE INTERNALLY LINED.
6. ANCHOR CONDENSING UNITS TO SLAB.
7. PROVIDE GRILLE OF ALUMINUM CONSTRUCTION.
8. PROVIDE CHANNELS 8" HIGH WITH TUBING CLIPS WITH RUBBER ISOLATORS FOR REFRIGERANT LINE SUPPORT. SECURE CHANNELS TO SLAB WITH EXPANSION ANCHORS.
9. FLEXIBLE REFRIGERANT PIPE CONNECTION.
10. PROVIDE PIPE SLEEVES WITH MECHANICAL SEAL FOR REFRIGERANT PIPES.
11. BOTTOM OF GRILLE IN SOFFIT TO BE @ 7'-6" AFF.
12. TEMPERATURE CONTROL TERMINAL ON PORTABLE COMPUTER TABLE WITH CASTERS AND AN ADDITIONAL 25ft OF WIRE COILED BELOW ACCESS FLOOR.
13. PIPING ROOF CURB. SEE DETAIL, DWG M04.
14. PROVIDE A COUNTERBALANCED BACKDRAFT DAMPER AND FIELD ADJUST TO BALANCE BUILDING PRESSURIZATION.

NO.	DATE	PREPARED BY	CHECKED BY	FDI APPROVED	ACOR/COTR APPROVED	DESCRIPTION OF REVISION
1	10/9/95	JAD	SXM	ERP/RRW	FGR/JTS	REVISED PER AS-BUILT CONDITIONS

WFO / NEXRAD PROGRAM
PROJECT NO. I001

PROGRAM MANAGEMENT SERVICES CONTRACTOR
FLUOR DANIEL
GOULD EVANS ARCHITECTS, P.A.
KANSAS CITY, MO. U.S.A.

SAFETY SHOULD ALWAYS BE FIRST WITH EVERY TASK YOU DO

DRAWN R. L. ANDREWS
CHECKED M. MEYER
SUPV. ENGR. DALE FULCHER
ENGR/PROJ. MGR. BLR/RRW
ACOR/COTR EHM/JTS

SPECIAL ENGINEERING PROGRAM OFFICE (SEPO)

WEATHER FORECAST OFFICE
GREENVILLE/SPARTANBURG, SC

HVAC PLAN

SIZE	DWG. NO.	CLIN.	REV.
5	M03	I0	1

044131-

FDSP0043 KCIOM031 JAD 10/03/95@11:49

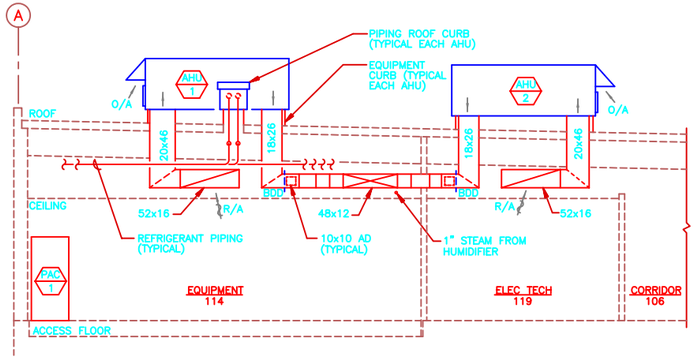

SECTION 1 M03
SCALE: 1/4"=1'-0"

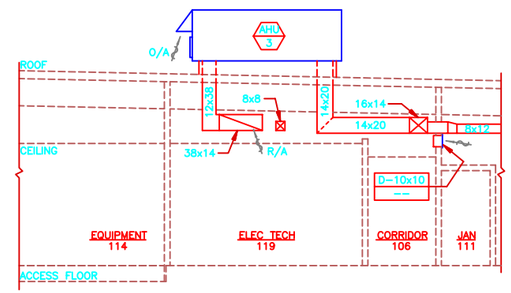

SECTION 2 M03
SCALE: 1/4"=1'-0"

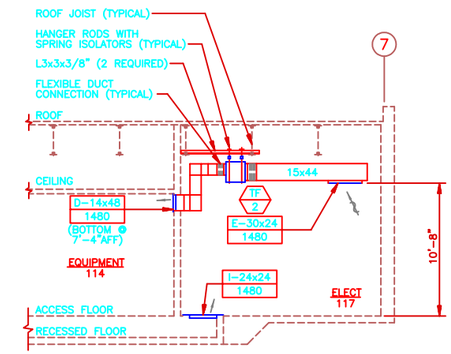

SECTION 3 M03
SCALE: 1/4"=1'-0"

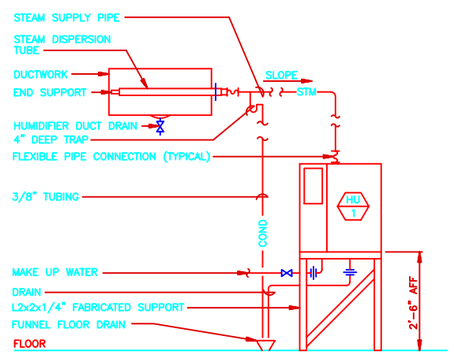

HUMIDIFIER PIPING DETAIL
SCALE: NONE

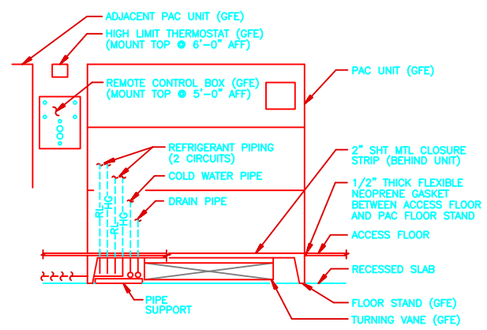

PAC UNIT DETAIL
SCALE: NONE

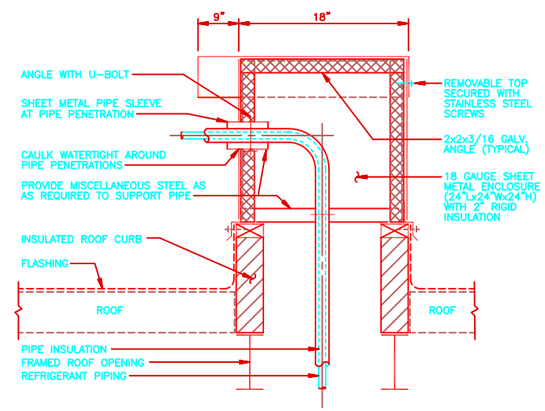

PIPE ROOF CURB DETAIL
SCALE: NONE

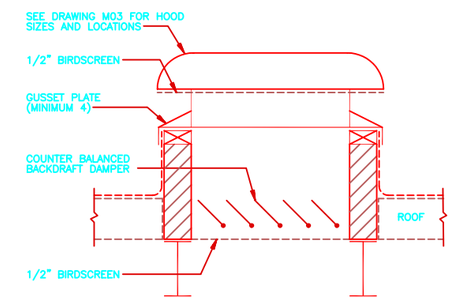

ROOF HOOD (RH1, RH2) DETAIL
SCALE: NONE

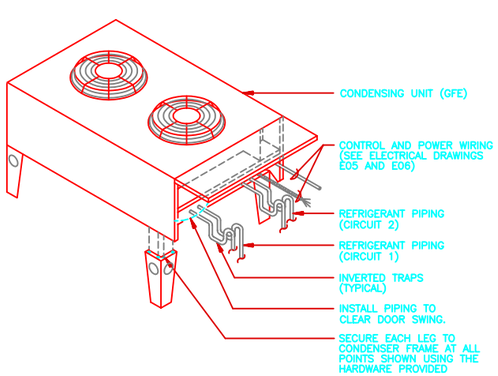

PAC CONDENSING UNIT DETAIL
SCALE: NONE

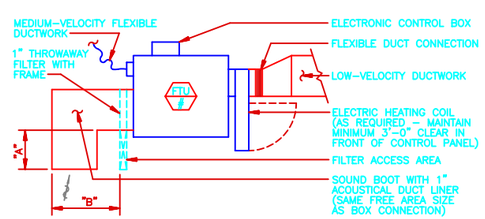

SOUND BOOT SCHEDULE					
FTU SIZE	FTU CONNECTION		BOOT DIMENSION		REMARKS
	WIDTH	DEPTH	"A"	"B"	
6"ø/8"ø	13"	11 1/2"	6"	3'-0"	SELECT FAN IN QUIET RANGE
10"ø	15"	14 1/2"	12"	3'-0"	SELECT FAN IN QUIET RANGE
12"ø	20"	16 1/2"	18"	4'-0"	SELECT FAN IN QUIET RANGE

NOTES
1. SOUND BOOT SIZES ARE FOR A SPECIFIC MANUFACTURER, AND MAY REQUIRE RESIZING FOR A DIFFERENT MANUFACTURER.
2. MAXIMUM SOUND BOOT OUTLET VELOCITY SHALL BE 750 FPM.

FTU DETAIL
SCALE: NONE

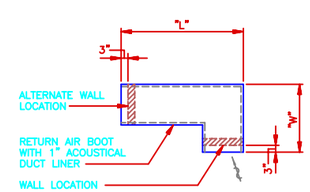

RETURN AIR BOOT SCHEDULE			
RA BOOT SIZE	CFM RANGE	RA BOOT DIMENSIONS	
		"L"	"W"
12x12	0-500	3'-0"	2'-0"
24x12	501-1000	7'-0"	3'-0"
24x24	1001-2000	7'-0"	3'-0"

NOTES:
1. SEE ARCHITECTURAL DRAWINGS FOR SOUND WALL LOCATIONS.
2. SEAL WALL PENETRATIONS AIRTIGHT.

RA BOOT DETAIL
SCALE: NONE

0 2' 4' 8' 12'
SCALE: 1/4"=1'-0"

NO.	DATE	PREPARED BY	CHECKED BY	RS APPROVED	ACR/CURB APPROVED	DESCRIPTION OF REVISION
1	10/9/95	JAD	SXM	ERP/RRW	FGR/JTS	REVISED PER AS-BUILT CONDITIONS

WFO / NEXRAD PROGRAM
PROJECT NO. I001

PROGRAM MANAGEMENT SERVICES CONTRACTOR
FLUOR DANIEL
GOULD EVANS ARCHITECTS, P.A.
KANSAS CITY, MO. U.S.A.

SAFETY SHOULD ALWAYS BE FIRST WITH EVERY TASK YOU DO

SEPO

DRAWN: R. L. ANDREWS
CHECKED: M. MEYER
SUP'V. ENGR: DALE FULCHER
ENGR/PROJ. MGR: BLR/RRW
ACCRS. PGRM: EKM/JTS

SPECIAL ENGINEERING PROGRAM OFFICE (SEPO)

WEATHER FORECAST OFFICE
GREENVILLE/SPARTANBURG, SC

HVAC SECTIONS AND DETAILS

044131-	SIZE 5	DWG. NO. M04	CLIN. I0	REV. 1

FDSP0043 KO3M041 JAD 10/05/95@08:39

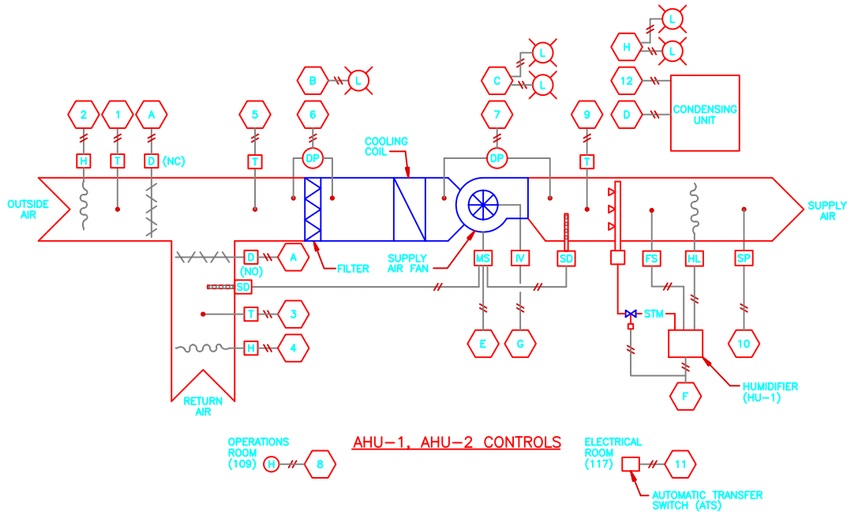

AHU-1, AHU-2 CONTROLS

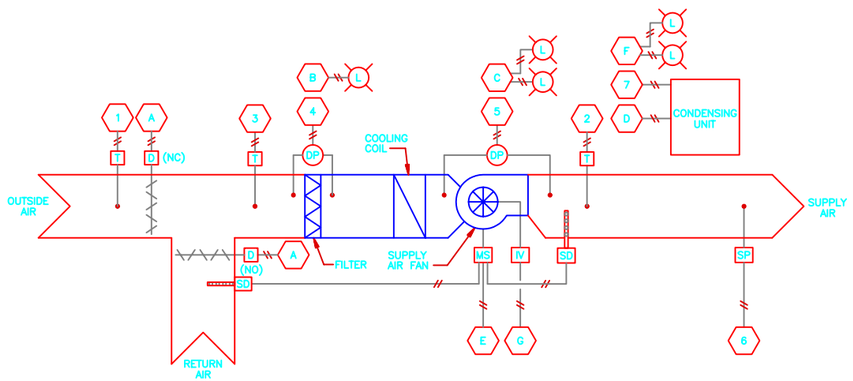

AHU-3 CONTROLS

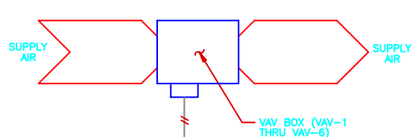

VAV CONTROLS

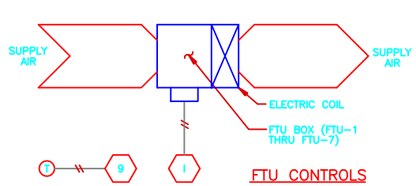

FTU CONTROLS

AHU-1, AHU-2 CONTROLS

INPUTS		OUTPUTS	
1	O/A TEMPERATURE	A	O/A, R/A DAMPERS
2	O/A HUMIDITY	B	DIRTY FILTERS
3	R/A TEMPERATURE	C	SUPPLY FAN STATUS
4	R/A HUMIDITY	D	COOLING
5	M/A TEMPERATURE	E	AHU START/STOP
6	FILTER DIFF PRESSURE	F	HUMIDIFIER
7	FAN DIFF PRESSURE	G	INLET GUIDE VANES
8	SPACE HUMIDITY	H	CONDENSING UNIT STATUS
9	S/A TEMPERATURE		
10	S/A STATIC PRESSURE		
11	COMMERCIAL/GENERATOR POWER STATUS		
12	CONDENSING UNIT CONTROL SAFETIES		

AHU-3 CONTROLS

INPUTS		OUTPUTS	
1	O/A TEMPERATURE	A	O/A, R/A DAMPERS
2	S/A TEMPERATURE	B	DIRTY FILTERS
3	M/A TEMPERATURE	C	SUPPLY FAN STATUS
4	FILTER DIFF PRESSURE	D	COOLING
5	FAN DIFF PRESSURE	E	AHU START/STOP
6	S/A STATIC PRESSURE	F	CONDENSING UNIT STATUS
7	CONDENSING UNIT CONTROL SAFETIES	G	INLET GUIDE VANES

VAV AND FTU CONTROLS

INPUTS		OUTPUTS	
1	SPACE TEMPERATURE	A	VAV BOX (VAV-1)
.		.	
.		.	
.		.	
6	SPACE TEMPERATURE	F	VAV BOX (VAV-6)
7	SPACE TEMPERATURE	G	FTU BOX (FTU-1)
.		.	
.		.	
.		.	
13	SPACE TEMPERATURE	M	FTU BOX (FTU-7)

TEMPERATURE CONTROL NOTES

1. THE CONTRACTOR SHALL BE RESPONSIBLE FOR DETAILING THE HVAC CONTROL SYSTEM, POWER WIRING, LOW VOLTAGE CONTROL WIRING, AND CONNECTIONS NECESSARY TO PROVIDE A COMPLETE AND OPERABLE TEMPERATURE AND HUMIDITY CONTROL SYSTEM BASED ON THE SCHEMATIC AND SEQUENCE OF OPERATION AS SHOWN ON THIS DRAWING.
2. THE ALARM AND INDICATION LIGHTS PANEL SHALL BE PROVIDED WITH THE FOLLOWING IDENTIFICATION AND INDICATOR LIGHTS:

FAN (AHU-1) OPERATING/FAILURE	GREEN/RED
FAN (AHU-2) OPERATING/FAILURE	GREEN/RED
FAN (AHU-3) OPERATING/FAILURE	GREEN/RED
DIRTY FILTER (AHU-1)	RED
DIRTY FILTER (AHU-2)	RED
DIRTY FILTER (AHU-3)	RED
CONDENSING UNIT (ACU-1) OPERATING/FAILURE	GREEN/RED
CONDENSING UNIT (ACU-2) OPERATING/FAILURE	GREEN/RED
CONDENSING UNIT (ACU-3) OPERATING/FAILURE	GREEN/RED
HUMIDIFIER ALARM	RED

3. ALL 24 VOLT CONTROL WIRING SHALL BE FURNISHED AND INSTALLED BY TEMPERATURE CONTROL CONTRACTOR AND SHALL BE SHIELDED CLASS 2 PLENUM RATED CABLE.
4. ALL 120 VOLT POWER WIRING TO CONTROL PANELS SHALL BE FURNISHED AND INSTALLED BY THE ELECTRICAL CONTRACTOR (SEE ELECTRICAL DRAWINGS).
5. ALL 24 VOLT CONTROL WIRING UNDER THE FLOOR SHALL BE INSTALLED IN CONDUITS (SEE ELECTRICAL DRAWINGS).
6. SET ROOM TEMPERATURE TO 72°F FOR ALL AREAS SERVED BY AHU-1 AND 2. FOR ALL AREAS SERVED BY AHU-3, SET ROOM TEMPERATURE TO 78°F DURING SUMMER COOLING SEASON, AND TO 65°F DURING WINTER HEATING SEASON. SET ROOM RELATIVE HUMIDITY AT 50%.
7. SET ALTERNATING TIME OF AHU-1 & 2, AND PAC-1 & 2 FOR 84 HOUR INTERVALS.

EQUIPMENT SEQUENCE OF CONTROLS

AIR HANDLING UNIT (AHU-1,2)

AIR HANDLING UNITS (AHU-1,2) SERVE THE OPERATIONS AREA AND ARE OPERATED ON A 24 HOUR SCHEDULE. ONLY ONE AIR HANDLING UNIT SHALL OPERATE, AND THE NON-OPERATING UNIT SHALL SERVE AS A BACKUP. THE BACK-UP UNIT SHALL BE STARTED AUTOMATICALLY UPON FAILURE OF THE OTHER UNIT. THE OPERATION OF THE AIR HANDLING UNITS SHALL ALSO BE ALTERNATED. THE SUPPLY AIR FAN SHALL RUN CONTINUOUSLY. A SUPPLY AIR STATIC PRESSURE SENSOR SHALL MODULATE THE SUPPLY FAN INLET GUIDE VANE. A SUPPLY AIR TEMPERATURE SENSOR SHALL MODULATE THE COMPRESSORS TO MAINTAIN 55°F DISCHARGE AIR TEMPERATURE. THE COMPRESSORS SHALL BE EQUIPPED WITH CYLINDER UNLOADERS FOR STAGED COOLING. AN OUTSIDE AIR ECONOMIZER CYCLE SHALL BE PROVIDED WITH ENTHALPY CONTROL. A MIXED AIR TEMPERATURE SENSOR SHALL MODULATE THE OUTSIDE AND RETURN AIR DAMPERS DURING THE ECONOMIZER CYCLE. MINIMUM OUTSIDE AIR SHALL BE PROVIDED WHEN THE UNIT IS NOT IN THE ECONOMIZER CYCLE. HUMIDITY SHALL BE CONTROLLED BY A SPACE HUMIDITY SENSOR. HEATING WILL BE PROVIDED BY THE INDIVIDUAL FAN TERMINAL UNITS (FTU). SMOKE DETECTORS, IN THE SUPPLY AND RETURN AIR DUCTWORK, SHALL DE-ENERGIZE THE SUPPLY AIR FAN UPON SENSING SMOKE.

AIR HANDLING UNIT (AHU-3)

AIR HANDLING UNIT (AHU-3) SERVES THE ADMINISTRATION AREA AND OPERATES ON AN 8 HOUR SCHEDULE. THE AIR HANDLING UNIT SHALL BE PROGRAMMED FOR NIGHT SET-BACK CONTROL, IN THE HEATING MODE ONLY. THE OPERATION OF AIR HANDLING UNIT (AHU-3) IS SIMILAR TO AIR HANDLING UNITS (AHU-1,2), WITH THE FOLLOWING EXCEPTIONS:
(1) OUTSIDE AIR ECONOMIZER CYCLE IS CONTROLLED BY OUTSIDE AIR TEMPERATURE, AND
(2) NO HUMIDITY CONTROL. UPON A SIGNAL FROM THE ATS, ON GENERATOR POWER, AHU-3 SHALL NOT BE ALLOWED TO RUN.

GOVERNMENT FURNISHED PACKAGED AIR CONDITIONING UNITS (PAC-1,2)

THE PAC UNITS (PAC-1,2), CONDENSING UNITS (C-1,2) AND THE REMOTE CONTROL BOX (RCB) ARE GOVERNMENT FURNISHED EQUIPMENT. BOTH PAC UNITS HAVE INTERNAL CONTROLS AND ARE CONNECTED TO THE RCB. THE RCB CONTROLS THE LEAD/LAG SEQUENCING OF THE UNITS TO MAINTAIN EQUAL RUN TIME. A HIGH TEMPERATURE THERMOSTAT IS ALSO CONNECTED TO THE RCB, TO ENERGIZE THE LAG PAC UNIT ON A HIGH SPACE TEMPERATURE SIGNAL. BOTH PAC UNITS WILL BE ABLE TO RUN IN THE NORMAL OPERATION MODE. UPON A SIGNAL FROM THE AUTOMATIC TRANSFER SWITCH (ATS), THE RCB WILL ALLOW ONLY ONE PAC UNIT TO RUN IN THE EMERGENCY OPERATION MODE.

VAV CONTROLS

A SPACE TEMPERATURE SENSOR SHALL MODULATE THE VAV BOX DAMPER WHEN COOLING IS REQUIRED.

FTU CONTROLS

A SPACE TEMPERATURE SENSOR SHALL MODULATE THE FTU BOX DAMPER WHEN COOLING IS REQUIRED. FOR HEATING, THE FTU BOX DAMPER SHALL BE SET TO A MINIMUM POSITION AND THE FAN ENERGIZED. AS ADDITIONAL HEATING IS REQUIRED, THE ELECTRIC HEATING COIL SHALL BE STAGED ON.

EXHAUST FAN (EF-1)

THE EXHAUST FAN SHALL RUN CONTINUOUSLY.

TRANSFER FAN (TF-2)

THE TRANSFER FAN SHALL RUN CONTINUOUSLY.

HUMIDIFIER (HU-1)

THE HUMIDIFIER SHALL NOT BE ALLOWED TO OPERATE UNLESS THE AHU SUPPLY AIR FAN IS IN OPERATION. AN AIRFLOW SWITCH SHALL DE-ENERGIZE THE HUMIDIFIER UPON LOSS OF AIRFLOW. THE SPACE HUMIDITY SENSOR SHALL MODULATE THE HUMIDIFIER. WHEN THE HUMIDIFIER IS ENERGIZED, THE SUPPLY AIR TEMPERATURE SHALL BE RESET TO 65°F. STEAM SHALL NOT BE DISCHARGED INTO THE DUCTWORK UNTIL A MINIMUM SUPPLY AIT TEMPERATURE OF 65°F IS REACHED. WHEN THE HUMIDIFIER IS DE-ENERGIZED, THE SUPPLY AIR TEMPERATURE SHALL BE SET BACK TO 55°F. A SIGNAL FROM THE HIGH-LIMIT HUMIDISTAT SHALL DE-ENERGIZE THE HUMIDIFIER.

ELECTRIC CONVECTION HEATERS (EH-1,2)

THE ELECTRIC CONVECTION HEATERS HAVE SELF CONTAINED CONTROLS. THE THERMOSTATS SHALL BE SET TO MAINTAIN A SPACE TEMPERATURE OF 65°F.

TEMPERATURE CONTROL LEGEND

- T — DUCT TEMPERATURE SENSOR
- FS — AIRFLOW SWITCH
- DP — DIFFERENTIAL PRESSURE SWITCH
- SD — DUCT SMOKE DETECTOR
- HL — HUMIDITY HIGH LIMIT SENSOR
- H — DUCT HUMIDITY SENSOR
- D — MOTOR OPERATED DAMPER (NO-NORMALLY OPEN) (NC-NORMALLY CLOSED)
- IV — INLET GUIDE VANE
- SP — STATIC PRESSURE SENSOR
- L — INDICATOR LIGHT (LOCATED IN ALARM AND INDICATION LIGHTS PANEL)
- T — ROOM TEMPERATURE SENSOR
- H — ROOM HUMIDITY SENSOR
- MS — MOTOR STARTER
- TEMPERATURE CONTROL PANEL INPUT OR OUTPUT
- CONTROL WIRING

NO.	DATE	PREPARED BY	CHECKED BY	PM APPROVED	ACTM/CCTR APPROVED	DESCRIPTION OF REVISION
1	10/9/95	JAD	SXM	ERP/RRW	FGR/JTS	REVISED PER AS-BUILT CONDITIONS

WFO / NEXRAD PROGRAM
PROJECT NO. 1001

PROGRAM MANAGEMENT SERVICES CONTRACTOR
FLUOR DANIEL
GOULD EVANS ARCHITECTS, P.A.
KANSAS CITY, MO. U.S.A.

SAFETY SHOULD ALWAYS BE FIRST WITH EVERY TASK YOU DO

DRAWN R. L. ANDREWS
CHECKED L. M. MEYER
SUP'V. ENGR. DALE FULCHER
ENGR/PROJ. MGR. BLR/RRW
ACCTR/CCTR. EHM/JTS

SPECIAL ENGINEERING PROGRAM OFFICE (SEPO)

WEATHER FORECAST OFFICE
GREENVILLE/SPARTANBURG, SC
HVAC
TEMPERATURE CONTROLS

044131-	5	M05	10	1

FD5P0043 KCOM051 JAD 10/05/95808:51

AIR HANDLING UNIT SCHEDULE

EQUIP NO	DESCRIPTION	SUPPLY AIR FAN								REFRIGERANT COOLING COIL						FILTERS			ACCESSORIES	REMARKS
		FAN TYPE	TOTAL AIR (CFM)	OUTSIDE AIR (CFM)	TSP (IN WG)	ESP (IN WG)	FAN RPM	FAN HP	POWER	TOTAL CAPACITY (BTU/HR)	SENSIBLE CAPACITY (BTU/HR)	E A T DB (°F)	E A T WB (°F)	STATIC PRESS DROP (IN WG)	ROWS & FINS/IN	TYPE	SP (IN WG) CLEAN	SP (IN WG) DIRTY		
AHU 1	HORIZONTAL DRAW THROUGH	AIRFOIL	4,260	735	2.70	1.25	2,018	5.0	460V/3PH	127,841	103,595	78.4	63.7	.57	6/14	2"-1% PLEATED FILTER	.35	.70	VI, HEM	SOUND POWER LEVEL SHALL NOT EXCEED 91dB IN THE 125Hz OCTAVE BAND.
AHU 2	HORIZONTAL DRAW THROUGH	AIRFOIL	4,260	735	2.70	1.25	2,018	5.0	460V/3PH	127,841	103,595	78.4	63.7	.57	6/14	2"-1% PLEATED FILTER	.35	.70	VI, HEM	SOUND POWER LEVEL SHALL NOT EXCEED 91dB IN THE 125Hz OCTAVE BAND.
AHU 3	HORIZONTAL DRAW THROUGH	AIRFOIL	2,515	400	2.45	1.25	2,369	2.0	460V/3PH	87,159	70,534	83.4	67.7	.43	6/8	2"-1% PLEATED FILTER	.35	.70	VI, HEM	SOUND POWER LEVEL SHALL NOT EXCEED 91dB IN THE 125Hz OCTAVE BAND.

NOTES:
1. PLEATED FILTERS ARE RATED AT AN INITIAL EFFICIENCY OF 0.3 MICRONS.
2. CARBON FILTERS ARE RATED AT AN AVERAGE VOC EFFICIENCY % (TOLUENE).

GOVERNMENT FURNISHED PACKAGED AIR CONDITIONER SCHEDULE

EQUIP NO	SUPPLY FAN			COOLING COIL				ELECTRIC REHEAT COIL (kW)	HUMIDIFIER		ELECTRICAL			ACCESSORIES	REMARKS
	AIRFLOW (CFM)	FAN HP	ESP (IN WG)	TOTAL CAPACITY (BTU/HR)	SENSIBLE CAPACITY (BTU/HR)	E A T DB (°F)	E A T (% RH)		CAPACITY (LBS/HR)	ELECTRICAL CAPACITY (kW)	POWER	FLA	MCA		
PAC 1	4,650	1.5	0.50	109,100	88,400	72.0	50	15.0	11.0	3.6	460V/3PH	32.4	39.9	DDS, FS, HD	DOWNFLOW, NOMINAL 8 TON
PAC 2	4,650	1.5	0.50	109,100	88,400	72.0	50	15.0	11.0	3.6	460V/3PH	32.4	39.9	DDS, FS, HD	DOWNFLOW, NOMINAL 8 TON

NOTE: ALL UNITS HAVE 4"-40% PRE-FILTERS

AIR COOLED CONDENSING UNIT SCHEDULE

EQUIP NO	NO OF FANS	AMBIENT TEMP (°F)	POWER	FLA	MCA	ACCESSORIES	REMARKS
ACU 1	2	110	460V/3PH	26.3	31.7		
ACU 2	2	110	460V/3PH	26.3	31.7		
ACU 3	1	110	460V/3PH	19.6	24.1		

GOVERNMENT FURNISHED AIR COOLED CONDENSING UNIT SCHEDULE

EQUIP NO	NO OF FANS	AMBIENT TEMP (°F)	ELECTRICAL			ACCESSORIES	REMARKS
			POWER	FLA	MCA		
C 1	2	105	460V/3PH	4.0	4.5	DS, FSC	
C 2	2	105	460V/3PH	4.0	4.5	DS, FSC	

ELECTRIC HEATER SCHEDULE

EQUIP NO	DESCRIPTION	TYPE	HEATER ELEMENT LENGTH (FT)	NOMINAL WATTS/FT	TOTAL HEATING WATTS	CAPACITY (BTU/HR)	POWER	REMARKS
EH 1	SILL HEIGHT CONVECTOR	PEDESTAL	4.0	500	2000	6826	277V/1PH	BOTTOM AIR INLET WITH TOP DISCHARGE, NOTES 1 AND 2.
EH 2	SILL HEIGHT CONVECTOR	PEDESTAL	4.0	500	2000	6826	277V/1PH	BOTTOM AIR INLET WITH TOP DISCHARGE, NOTES 1 AND 2.

NOTES:
1. CASING COLOR OF CONVECTOR TO MATCH WITH WINDOW FRAME.
2. ENCLOSURE REQUIRED FOR CONVECTOR SHALL BE 7 1/2"H x 4 1/2" D.

VARIABLE AIR VOLUME BOX SCHEDULE

EQUIP NO.	AIRFLOW (CFM)	INLET SIZE	NOISE CRITERIA VALUE	MAXIMUM A P D (IN WG)	REMARKS
VAV 1	460	8"	30	0.25"	
VAV 2	560	8"	30	0.25"	
VAV 3	720	10"	31	0.25"	
VAV 4	720	10"	31	0.25"	
VAV 5	720	10"	31	0.25"	
VAV 6	370	8"	30	0.25"	

NOTES:
1. SET MINIMUM AIRFLOW AT 0% OF BOX AIRFLOW.
2. NOISE CRITERIA (NC) VALUES SHALL BE IN ACORDANCE WITH ARI-880. NC VALUES ARE BASED ON 1.00" STATIC PRESSURE DIFFERENTIAL.

DIFFUSER SCHEDULE

SYMBOL	DIFFUSER TYPE	FACE TYPE	FACE SIZE	ACCESSORIES	REMARKS
A —	CEILING SUPPLY	LOUVERED	24x24	BD	
B —	CEILING RETURN	PERFORATED	12x24 or 24x24		
C —	SIDEWALL SUPPLY	DOUBLE DEFLECTION	SEE PLANS	OBD	
D —	SIDEWALL RETURN	FIXED LOUVER	SEE PLANS		PROVIDE ALUMINUM CONSTRUCTION ON ALL EXTERIOR GRILLES AS INDICATED ON PLANS.
E —	SIDEWALL/CEILING EXHAUST	FIXED LOUVER	SEE PLANS	OBD	
F —	TRANSFER GRILLE	FIXED LOUVER	SEE PLANS		PROVIDE GRILLE WITH TRANSFER BOOT AND 1" ACOUSTICAL DUCT LINING.
G —	CEILING SLOT SUPPLY	LINEAR	2'-0" LONG	BD, LFP	SEE FLOOR PLAN FOR NUMBER OF 3/4" SLOTS.
H —	CEILING SLOT RETURN	LINEAR	2'-0" LONG	LFP	SEE FLOOR PLAN FOR NUMBER OF 3/4" SLOTS.
I —	FLOOR GRILLE	FIXED BAR	SEE PLANS	OBD	

NOTE: SEE ARCHITECTURAL REFLECTED CEILING PLAN FOR EXACT DIFFUSER LOCATIONS AND CEILING TYPES.

FAN TERMINAL UNIT SCHEDULE

EQUIP NO	PRIMARY INLET SIZE	PRIMARY AIRFLOW (CFM)	FAN AIRFLOW @ 0.25" SP (CFM)	FAN HP	ELECTRIC HEATING COIL			REMARKS
					kW	POWER	STEPS	
FTU 1	10"	1,080	1,080	1/3	10.2	460V/3PH	2	
FTU 2	8"	575	575	1/4	4.5	460V/3PH	2	
FTU 3	8"	420	420	1/4	3.3	460V/3PH	2	
FTU 4	6"	280	280	1/10	2.2	277V/1PH	2	
FTU 5	8"	660	660	1/4	5.1	460V/3PH	2	
FTU 6	6"	150	150	1/10	1.2	277V/1PH	2	
FTU 7	6"	170	170	1/10	1.5	277V/1PH	2	

NOTES:
1. ALL FAN MOTORS ARE 277V/1PH.
2. SET MINIMUM PRIMARY AIRFLOW AT 10% OF BOX AIRFLOW.
3. MAINTAIN 3'-0" CLEARANCE IN FRONT OF ELECTRIC CONTROL PANEL.

FAN SCHEDULE

EQUIP NO	FAN TYPE	DRIVE TYPE	AIRFLOW (CFM)	TSP (IN WG)	FAN HP	POWER	ACCESSORIES	REMARKS
EF 1	INLINE CENTRIFUGAL	DIRECT	585	0.50"	1/8	120V/1PH	BDD, VI, ECS	4.2 SONES
EF 2	INLINE CENTRIFUGAL	DIRECT	1480	0.375"	1/2	120V/1PH	VI, ESC	5.8 SONES

HUMIDIFIER

EQUIP NO	STEAM CAPACITY (LBS/HR)	POWER	ELECTRICAL CAPACITY (kW)	ACCESSORIES	REMARKS
HU 1	35.0	460V/3PH	17.2	FS, HL	21.5 NOMINAL AMPS

ROOF HOOD SCHEDULE

EQUIP NO	AIRFLOW (CFM)	MAXIMUM APD (IN WG)	THROAT SIZE (IN)	FREE AREA (SQ/FT)	ACCESSORIES	REMARKS
RH 1	4,260	.25	42x48	14.00	RC, IS, HH, BDD	
RH 2	2,515	.25	30x30	6.25	RC, IS, HH, BDD	

NOTE: SET BACKDRAFT DAMPER TO RELIEVE AIR AT 0.10 IN WG DIFFERENTIAL PRESSURE.

HVAC ABBREVIATIONS

ACU	AIR COOLED CONDENSING UNIT
AD	ACCESS DOOR
AHU	AIR HANDLING UNIT
BDD	COUNTER-BALANCED GRAVITY BACKDRAFT DAMPER
C	CONDENSER
CUH	CABINET UNIT HEATER
DDS	DOOR INTERLOCKED DISCONNECT SWITCH
DS	DISCONNECT SWITCH
EH	ELECTRIC CONVECTION HEATER
EF	EXHAUST FAN
ESC	ELECTRONIC SPEED CONTROL
FM	OPTIONAL FAN MOTOR
FS	FLOOR STAND, FLOW SWITCH
FSC	FAN SPEED CONTROL (-20° AMBIENT)
FTU	FAN TERMINAL UNIT
HD	HEAT DETECTOR
HEM	HIGH EFFICIENCY MOTORS
HH	HINGED HOOD
HL	HIGH LIMIT DUCT HUMIDISTAT
HU	HUMIDIFIER
IGV	INLET GUIDE VANES
IS	INSECT SCREEN
LTC	LEE-TEMP CONTROL (-30° AMBIENT)
MS	2" DEEP SEMI-RECESSED MOUNTING SLEEVE
PAC	PACKAGED AIR CONDITIONING UNIT
RC	INSULATED ROOF CURB
RH	ROOF HOOD
T	INTEGRAL THERMOSTAT
TF	TRANSFER FAN
VAV	VARIABLE AIR VOLUME UNIT
VI	VIBRATION ISOLATORS

HVAC LEGEND

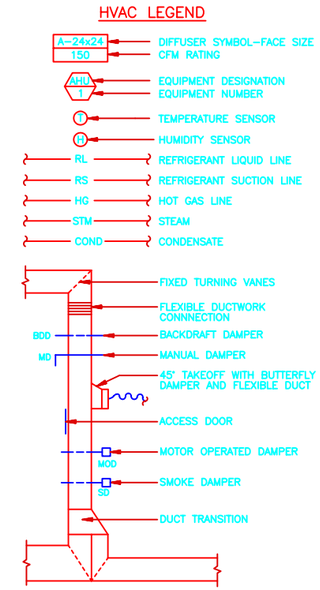

NO.	DATE	PREPARED BY	CHECKED BY	RS APPROVED	ACOR/CCOR APPROVED	DESCRIPTION OF REVISION
1	10/9/95	JAD	SXM	ERP/RRW	FGR/JTS	REVISED PER AS-BUILT CONDITIONS

WFO / NEXRAD PROGRAM
PROJECT NO. 1001

PROGRAM MANAGEMENT SERVICES CONTRACTOR
FLUOR DANIEL
GOULD EVANS ARCHITECTS, P.A.
KANSAS CITY, MO. U.S.A.

SAFETY SHOULD ALWAYS BE FIRST WITH EVERY TASK YOU DO

SEPO

DRAWN: R. L. ANDREWS
CHECKED: M. MEYER
SUPV. ENGR.: DALE FULCHER
ENGR/PROJ. MGR.: BBL/RRW
ACOR/CCOR: CAM/JTS

SPECIAL ENGINEERING PROGRAM OFFICE (SEPO)

WEATHER FORECAST OFFICE
GREENVILLE/SPARTANBURG, SC

HVAC SYMBOLS, SCHEDULES AND LEGEND

044131-	SIZE 5	DWG. NO. M06	CLIN. 10	REV. 1

FDSP0043 KC0M061 JAD 10/05/95@08:57

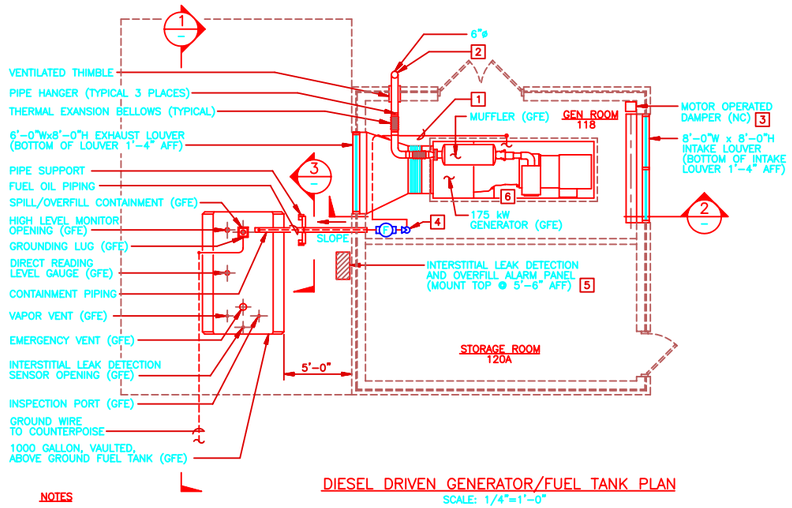

DIESEL DRIVEN GENERATOR/FUEL TANK PLAN
SCALE: 1/4"=1'-0"

NOTES

1. ROUTE FUEL OIL PIPE ON FLOOR WITH CHANNELS AND HOLDER CLIPS. CONNECT TO DAY TANK WITH FLEXIBLE PIPE CONNECTION AND SHUT-OFF VALVE.
2. TURN EXHAUST PIPE UP AND INSTALL RAIN CAP (GFE). TERMINATE EXHAUST PIPE 2'-0" ABOVE PARAPET.
3. MOTOR OPERATED DAMPER (NORMALLY MOTOR CLOSED, SPRING TO OPEN). INTERLOCK DAMPER WITH THE GENERATOR CONTROL PANEL. THE DAMPER SHALL OPEN WHEN THE GENERATOR IS STARTED.
4. INSTALL FUEL FILTER, THEN ANTI-SYPHON VALVE IN FUEL OIL PIPING AFTER ENTRANCE TO BUILDING WHERE PIPE TURNS DOWN TO FLOOR.
5. ROUTE CONTROL WIRING IN CONDUIT TO ALARM PANEL.
6. EXTEND LUBE OIL DRAIN LINE ON DDG WITH COUPLING, 4" LONG NIPPLE AND CAP TO FACILITATE MAINTENANCE (COORDINATE WITH GFE EQUIPMENT REQUIREMENTS).

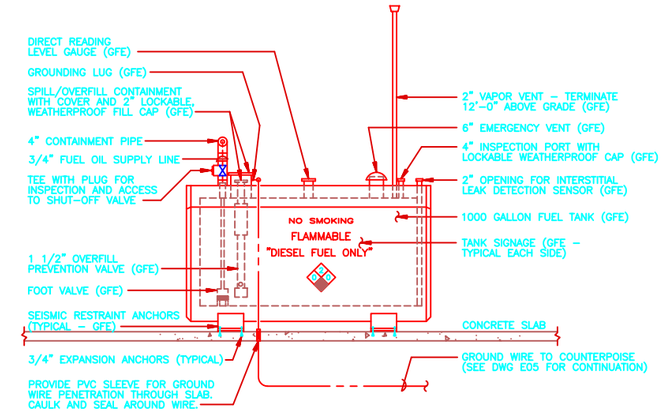

SECTION 1
SCALE: 1/2"=1'-0"

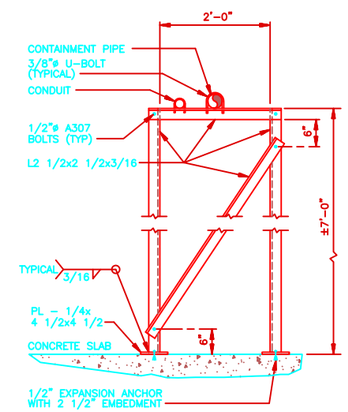

SECTION 3
SCALE: NONE

NOTE

GALVANIZE ALL PIPE SUPPORT COMPONENTS

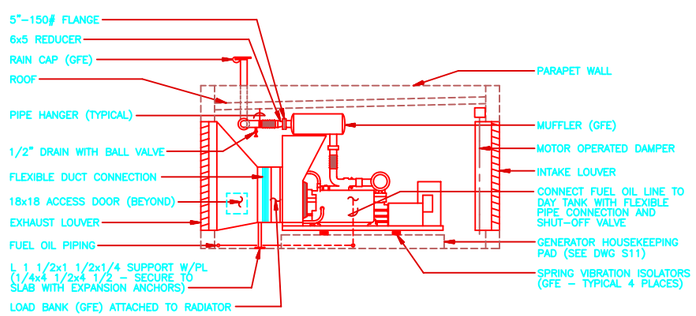

SECTION 2
SCALE: 1/4"=1'-0"

0 2' 4' 8' 12'
SCALE: 1/4"=1'-0"

0 1' 2' 4' 6'
SCALE: 1/2"=1'-0"

NO.	DATE	PREPARED BY	CHECKED BY	FOR APPROVAL	ACCTS/CONTR APPROVED	DESCRIPTION OF REVISION
1	10/9/95	JAD	SXM	ERP/RRW	FGR/JTS	REVISED PER AS-BUILT CONDITIONS

WFO / NEXRAD PROGRAM
PROJECT NO. 1001

PROGRAM MANAGEMENT SERVICES CONTRACTOR
FLUOR DANIEL
GOULD EVANS ARCHITECTS, P.A.
KANSAS CITY, MO. U.S.A.

SAFETY SHOULD ALWAYS BE FIRST WITH EVERY TASK YOU DO

SEPO

DRAWN: J McDONALD
CHECKED: M MEYER
SUPV. ENGR: DALE FULCHER
ENGR/PROJ. MGR: BUD ARRW
ACCTS./CONS: EHM/JTS

SPECIAL ENGINEERING PROGRAM OFFICE (SEPO)

WEATHER FORECAST OFFICE
GREENVILLE/SPARTANBURG, SC

DIESEL DRIVEN GENERATOR AND FUEL TANK

044131-	SIZE 5	DWG. NO. M07	CLIN. 10	REV. 1

FDSP0043 KCDM071 JAD 10/05/95@08:59

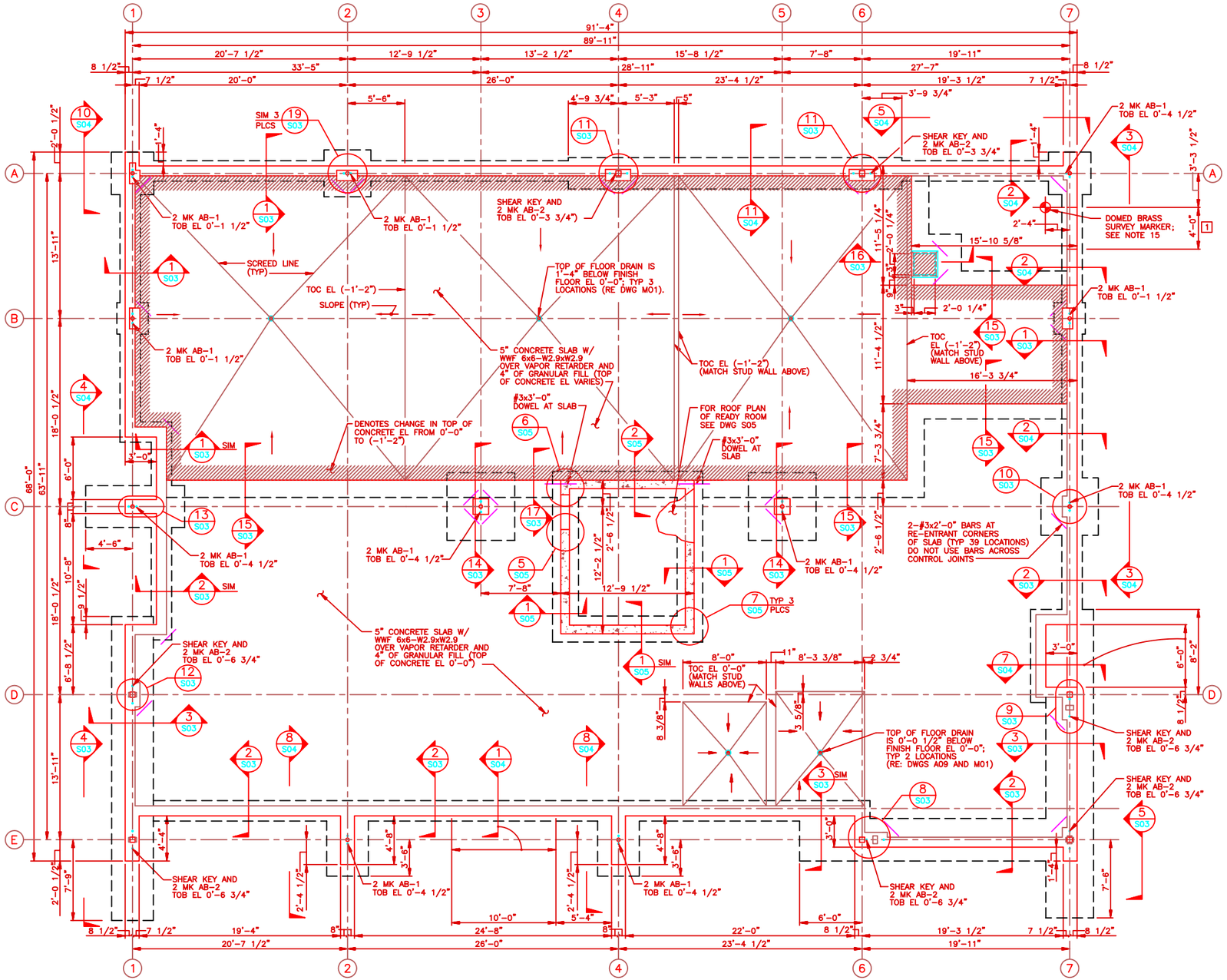

FOUNDATION PLAN
SCALE: 1/4"=1'-0"

BUILDING NORTH

GENERAL NOTES

1. ALL CONCRETE SHALL HAVE A MINIMUM COMPRESSIVE STRENGTH OF 4000 PSI AT 28 DAYS UNLESS NOTED OTHERWISE.
2. REINFORCING STEEL SHALL COMPLY WITH ASTM A615, GRADE 60.
3. REINFORCING STEEL SHALL HAVE THE FOLLOWING MINIMUM COVER:

FORMED SURFACES NOT IN CONTACT WITH EARTH	1 1/2"
FORMED SURFACES IN CONTACT WITH EARTH	2"
FOOTINGS CAST DIRECTLY AGAINST EARTH	3"

4. ALL REINFORCING STEEL HOOKS SHOWN ON THE DRAWINGS SHALL BE STANDARD HOOKS AS DEFINED BY ACI 318-89, UNLESS NOTED OTHERWISE.
5. UNLESS NOTED OTHERWISE, MINIMUM LENGTH OF LAP FOR TENSION LAP SPLICES SHALL BE AS FOLLOWS:

BAR SIZE	MINIMUM LENGTH (INCHES)
#3	15
#4	20
#5	26
#6	31

6. REINFORCING STEEL SHALL NOT BE WELDED OR FIELD BENT.
7. WHERE THE SIDES OF FOOTINGS ARE SHOWN CAST DIRECTLY AGAINST THE EARTH, THE CONTRACTOR MAY FORM FOOTINGS AT HIS OPTION.
8. CONCRETE ELEVATIONS SHOWN ON STRUCTURAL DRAWINGS ARE BASED ON A FINISH FLOOR ELEVATION OF 0'-0". FOR ACTUAL FINISH FLOOR ELEVATION SEE DRAWING C03.
9. NORTH ARROWS ON ALL STRUCTURAL DRAWINGS POINT TO BUILDING NORTH. FOR GRID NORTH SEE DRAWING C01.
10. SLAB ON GRADE REINFORCING SHALL BE PLACED 2" BELOW THE TOP OF THE SLAB, UNLESS NOTED OTHERWISE.
11. SEE DRAWING S08 FOR BRACING CONNECTION DETAILS AT BLOCKOUTS.
12. ALL HORIZONTAL REINFORCING AT WALL INTERSECTIONS AND CORNERS TO HAVE CORNER BARS OF SAME SIZE AND SPACING. SEE TYPICAL CORNER BAR DETAIL ON DRAWING S05.
13. SEE COLUMN FOOTING SCHEDULE ON DRAWING S05 FOR FOOTING SIZES, BEARING ELEVATIONS AND REINFORCING.
14. CONTRACTOR TO COORDINATE PIPE OR CONDUIT PENETRATIONS THROUGH FOUNDATIONS WITH THE ELECTRICAL AND MECHANICAL DRAWINGS. SEE TYPICAL PIPE OR CONDUIT AT FOOTING DETAIL ON DWG S05.
15. DOMED BRASS SURVEY MARKER SHALL BE CAST-IN-PLACE WITH THE SLAB. SEE SPECIFICATION SECTION 03300 FOR OTHER REQUIREMENTS.
16. ALL CONCRETE TIES SHALL BE OF SEISMIC CONFIGURATION ACCORDING TO ACI-318. THE "A" OR "G" LENGTH FOR #3 TIES IS 5".
17. SEE DWG S06 FOR COLUMN SCHEDULE AND ANCHOR BOLT SCHEDULE.

GENERAL STRUCTURAL NOTES

1. FOR ABBREVIATIONS, REFERENCE SYMBOLS AND LIST OF DRAWINGS SEE DWG I01.

NOTES

[1] ELECTRICAL ROOM DOOR LOCATION. RIGID INSULATION SHALL STOP BELOW SLAB AT THIS AREA SIMILAR TO SECTION 1 ON DWG S04.

SCALE: 1/4"=1'-0"

NO.	DATE	PREPARED BY	CHECKED BY	PM APPROVED	ACTM/CCTR APPROVED	DESCRIPTION OF REVISION
1	10/9/95	JAD	MAS	ERP/RRW	FGR/JTS	REVISED PER AS-BUILT CONDITIONS

WFO / NEXRAD PROGRAM
PROJECT NO. I001

PROGRAM MANAGEMENT SERVICES CONTRACTOR
FLUOR DANIEL
GOULD EVANS ARCHITECTS, P.A.
KANSAS CITY, MO. U.S.A.

SAFETY SHOULD ALWAYS BE FIRST WITH EVERY TASK YOU DO

DIVISION FUENFHAUSEN
CHECKED JR FEAKER
SUP'V. ENGR. D LOHE
ENGR/PROJ. MGR. BLR/RRW
ACCPL/CCTR. EHM/JTS

SPECIAL ENGINEERING PROGRAM OFFICE (SEPO)

WEATHER FORECAST OFFICE
GREENVILLE/SPARTANBURG, SC

FOUNDATION PLAN

SIZE	DWG. NO.	CLIN.	REV.
5	S01	I0	1

044131-

FDSF0043 KC0S011 JAD 10/03/95#0744

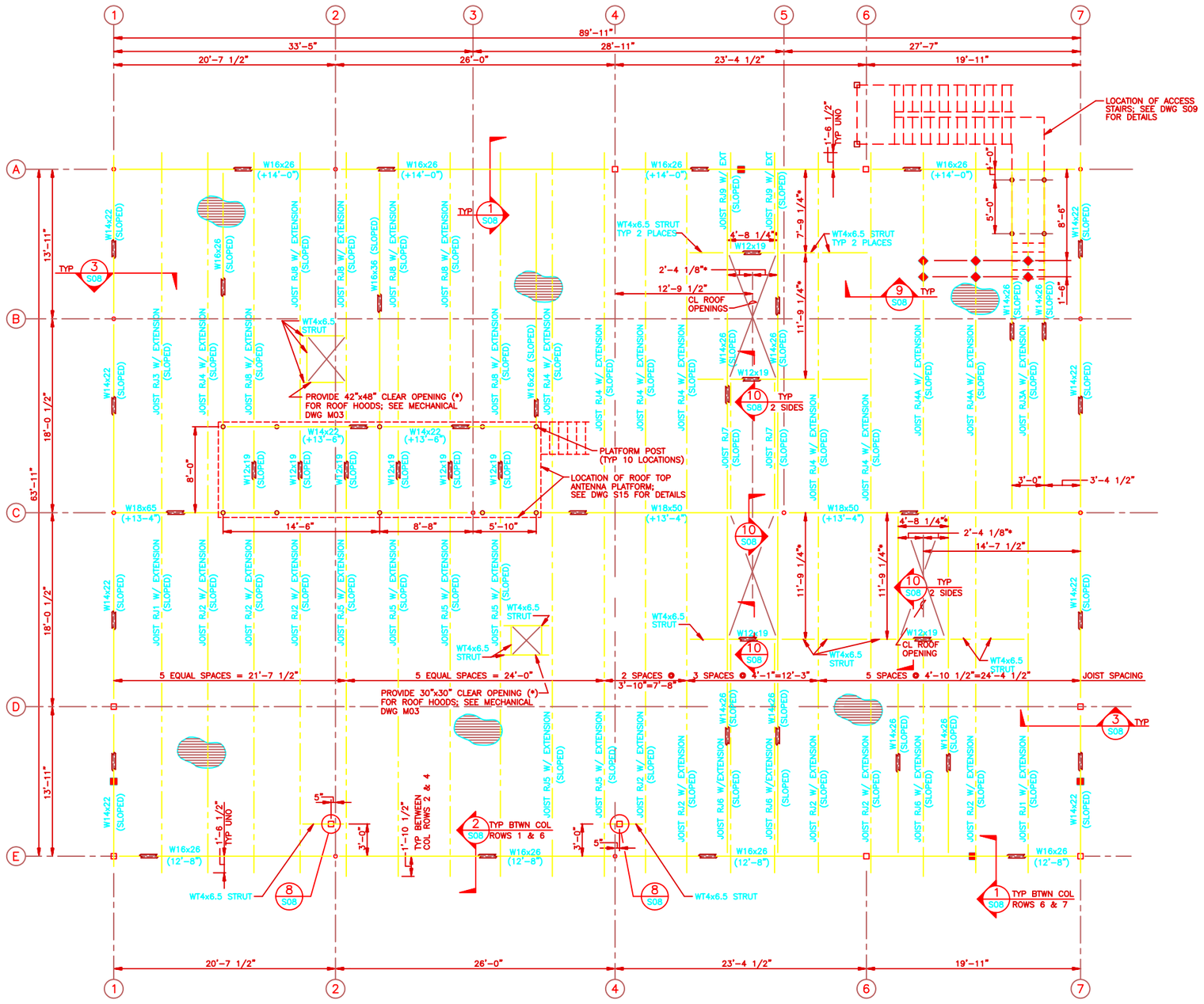

ROOF JOIST LOADING DETAIL

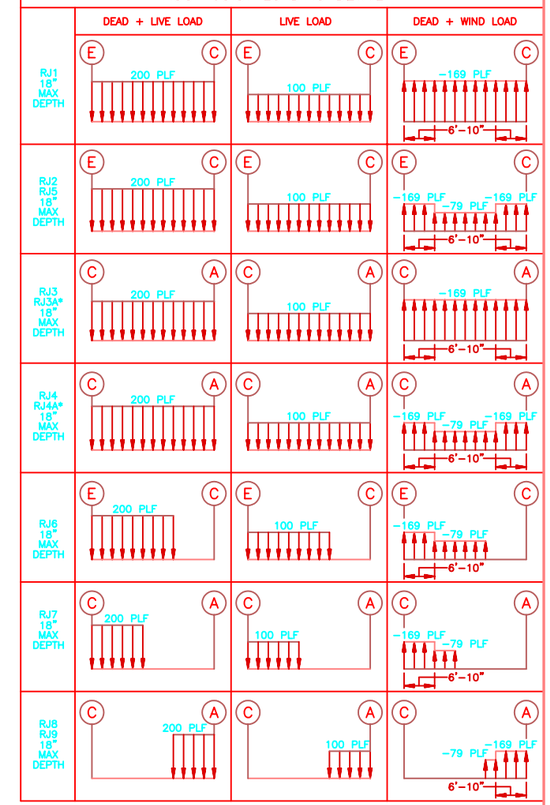

NOTES

1. THE DESIGN LOADS FOR THIS BUILDING ARE 20 PSF ROOF LIVE LOAD (REDUCABLE PER SECTION 2306 OF UBC '91), 75 MPH EXPOSURE C WIND LOAD, AND SEISMIC ZONE 2A APPLIED ACCORDING TO UBC '91.
2. JOIST DEFLECTION SHALL NOT EXCEED SPAN/240 FOR THE LIVE LOAD NOR DEAD + WIND LOAD.
3. ABOVE LOADING IS ALSO TO BE APPLIED TO JOIST EXTENSIONS.
4. TOP OF STEEL IS NOTED BY A (+) INDICATING THE DISTANCE ABOVE FLOOR ELEVATION 0'-0".
5. ROOF DECKING SHALL BE 1 1/2" DEEP WITH WIDE RIB CONFIGURATION AND SIZED FOR THE FOLLOWING:

   DEAD + LIVE LOAD = 35 PSF
   DEAD + WIND LOAD = -48 PSF
   LIVE LOAD = 20 PSF
   MAX LIVE LOAD DEFLECTION = SPAN/240
   HORIZONTAL (IN PLANE) SHEAR CAPACITY (MIN) = 150 PLF
6. ROOF DECK FASTENING SHALL BE IN ACCORDANCE WITH THE MANUFACTURER'S SPECIFICATIONS TO ACHIEVE THE VERTICAL AND HORIZONTAL DESIGN LOAD REQUIREMENTS. ALL WELDS SHALL BE MADE FOLLOWING AWS D1.3 SPECIFICATIONS BY QUALIFIED WELDERS.
7. JOIST SEATS ARE TO BE 2 1/2" HIGH AT CL OF SUPPORTING BEAM.
8. OPEN WEB STEEL JOISTS DESIGNATED AS RJ3 AND RJ4 ON ROOF FRAMING PLAN SHALL BE DESIGNED FOR THE ABOVE LOADING AND FIXED POINT LIVE LOADS AS INDICATED ON PLAN BY ◆ (ALSO REFER TO LEGEND). POINT LOADS ARE TO BE APPLIED TO BOTTOM CHORD OF BAR JOIST UNO.

LEGEND

- INDICATES DIRECTION OF SPAN FOR METAL DECKING.
- ■ INDICATES WIND BRACE CONNECTION BELOW BEAM.
- ○ INDICATES PIPE COLUMNS.
- □ INDICATES TUBE COLUMNS.
- * DENOTES DIMENSIONS WHICH ARE DEPENDENT ON ACTUAL EQUIPMENT TO BE SUPPLIED BY CONTRACTOR; THESE DIMENSIONS MUST BE VERIFIED BY THE CONTRACTOR PRIOR TO STEEL FABRICATION.
- ◆ INDICATES LOCATION OF POINT LIVE LOAD ON BOTTOM CHORD OF BAR JOIST WHICH COULD VARY FROM 0 TO 500#.

ROOF FRAMING PLAN
SCALE: 1/4"=1'-0"

BUILDING NORTH

0 2' 4' 8' 12'
SCALE: 1/4"=1'-0"

NO.	DATE	PREPARED BY	CHECKED BY	RDE APPROVED	ACOS/COTR APPROVED	DESCRIPTION OF REVISION
1	10/9/95	JAD	MAS	ERP/RRW	FGR/JTS	REVISED PER AS-BUILT CONDITIONS

WFO / NEXRAD PROGRAM
PROJECT NO. 1001

PROGRAM MANAGEMENT SERVICES CONTRACTOR
FLUOR DANIEL
GOULD EVANS ARCHITECTS, P.A.
KANSAS CITY, MO. U.S.A.

SAFETY SHOULD ALWAYS BE FIRST WITH EVERY TASK YOU DO

SEPO

DRAWN: FUENFHAUSEN
CHECKED: JR. FEAKER
SUP'V. ENGR.: D. LOHE
ENGR/PROJ. MGR.: BUR/ARW
ACOTR/COTR: EPM/JTS

SPECIAL ENGINEERING PROGRAM OFFICE (SEPO)
WEATHER FORECAST OFFICE
GREENVILLE/SPARTANBURG, SC
ROOF FRAMING PLAN

044131-	SIZE 5	DWG. NO. S02	CLIN. 10	REV. 1

FDSP0043 KC0S021 JAD 10/03/95@08:48

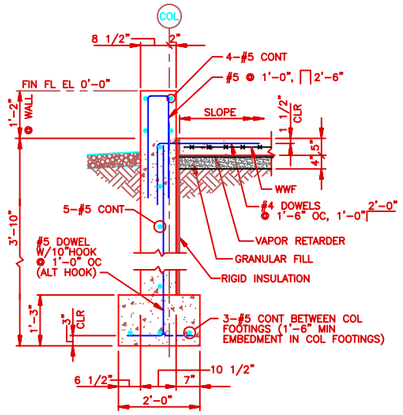

SECTION 1 (S01, S04)
SCALE: NONE

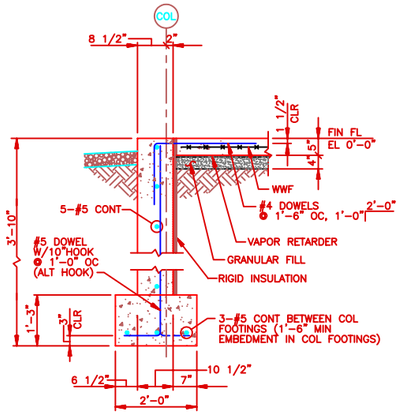

SECTION 2 (S01, S04)
SCALE: NONE

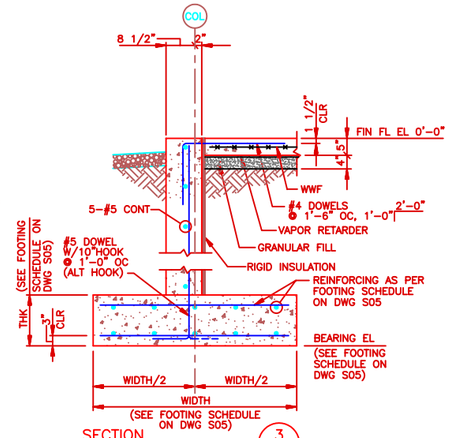

SECTION 3 (S01)
SCALE: NONE

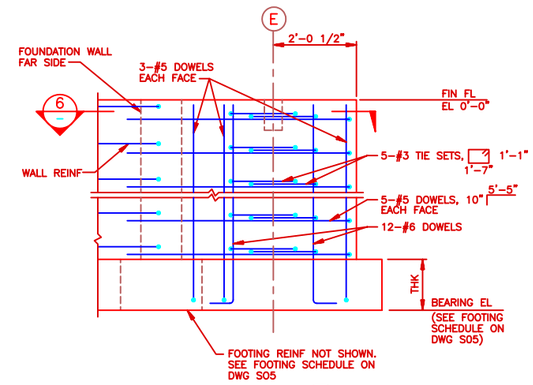

SECTION 4 (S01)
SCALE: NONE

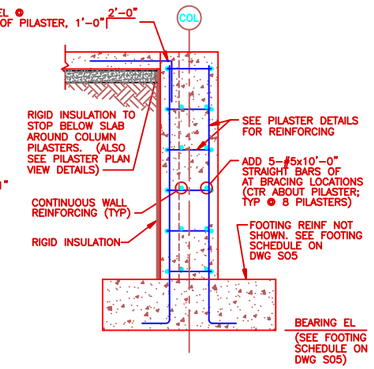

TYPICAL PILASTER SECTION
SCALE: NONE

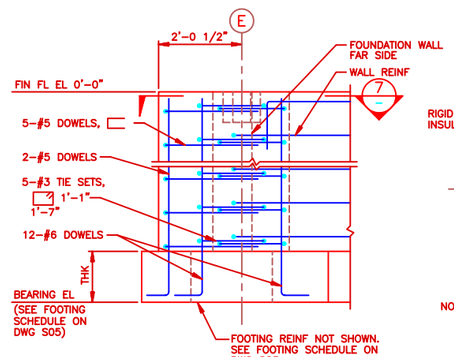

SECTION 5 (S01)
SCALE: NONE

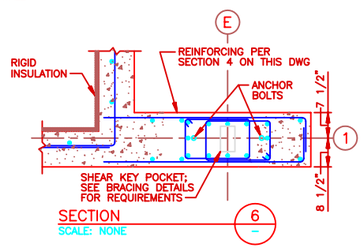

SECTION 6
SCALE: NONE

NOTE: WORK THIS DETAIL WITH DETAIL 4 ON DWG S08

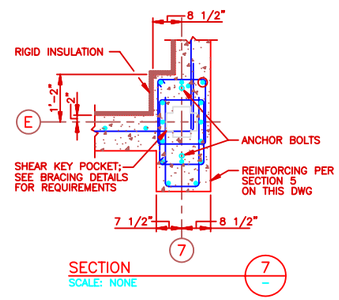

SECTION 7
SCALE: NONE

NOTE: WORK THIS DETAIL WITH DETAIL 6 ON DWG S08

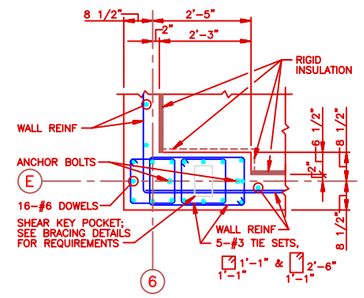

PILASTER DETAIL
DETAIL 8 (S01)
SCALE: NONE

NOTE: WORK THIS DETAIL WITH DETAIL 5 ON DWG S08

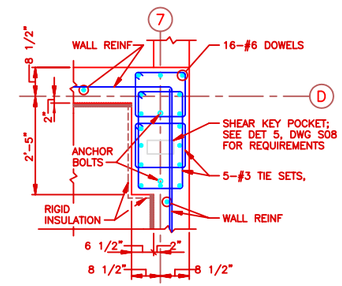

PILASTER DETAIL
DETAIL 9 (S01)
SCALE: NONE

NOTE: WORK THIS DETAIL WITH DETAIL 5 ON DWG S08

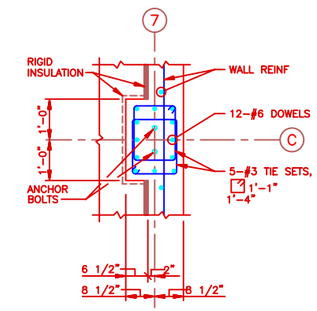

PILASTER DETAIL
DETAIL 10 (S01)
SCALE: NONE

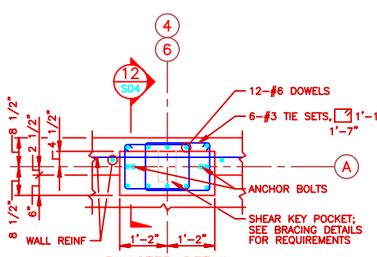

PILASTER DETAIL
DETAIL 11 (S01)
SCALE: NONE

NOTE: WORK THIS DETAIL WITH DETAIL 4 ON DWG S08

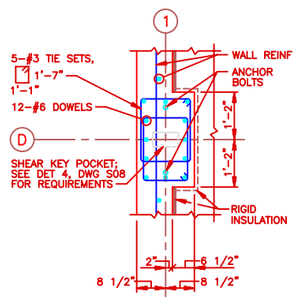

PILASTER DETAIL
DETAIL 12 (S01)
SCALE: NONE

NOTE: WORK THIS DETAIL WITH DETAIL 4 ON DWG S08

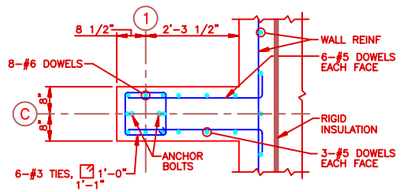

DETAIL 13 (S01)
SCALE: NONE

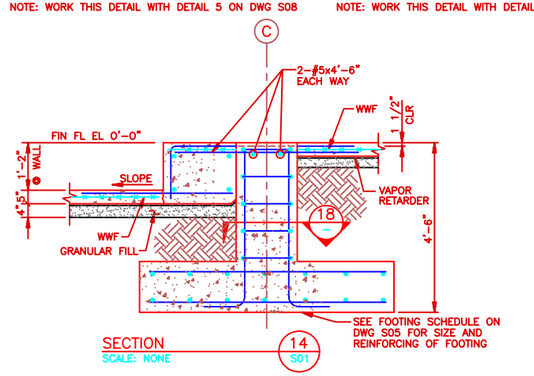

SECTION 14 (S01)
SCALE: NONE

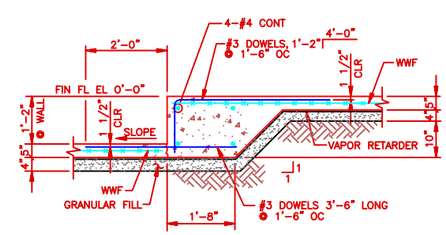

SECTION 15 (S01)
SCALE: NONE

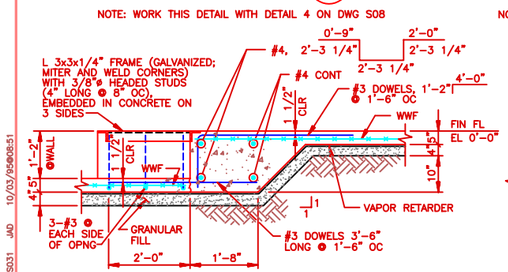

SECTION 16 (S01)
SCALE: NONE

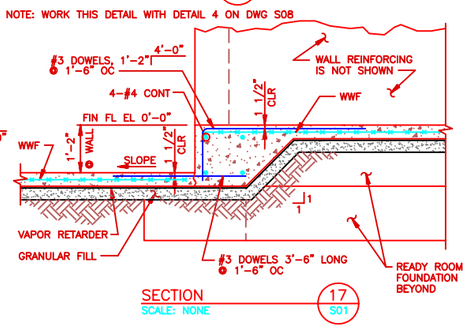

SECTION 17 (S01)
SCALE: NONE

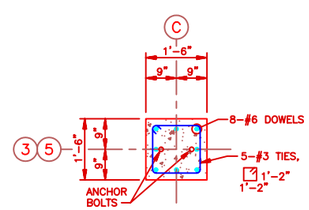

SECTION 18
SCALE: NONE

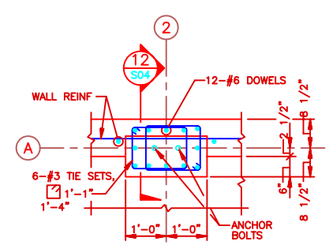

PILASTER DETAIL
DETAIL 19 (S01)
SCALE: NONE

NO.	DATE	PREPARED BY	CHECKED BY	PE APPROVED	ACTR/CCTR APPROVED	DESCRIPTION OF REVISION
1	10/9/95	JAD	MAS	ERP/RRW	FGR/JTS	REVISED PER AS-BUILT CONDITIONS

WFO / NEXRAD PROGRAM
PROJECT NO. 1001

PROGRAM MANAGEMENT SERVICES CONTRACTOR
FLUOR DANIEL
GOULD EVANS ARCHITECTS, P.A.
KANSAS CITY, MO. U.S.A.

SAFETY SHOULD ALWAYS BE FIRST WITH EVERY TASK YOU DO

DIVISION FUENFHAUSEN
CHECKED JR FEAKER
SUP'V. ENGR. D LOHE
ENGR/PROJ. MGR. BLR/RRW
ACCPL/CCPTR. EHM/JTS

SPECIAL ENGINEERING PROGRAM OFFICE (SEPO)
WEATHER FORECAST OFFICE
GREENVILLE/SPARTANBURG, SC
FOUNDATION SECTIONS AND DETAILS SHT 1 OF 2

044131–	SIZE 5	DWG. NO. S03	CLR. 10	REV. 1

FDSP0043 KCIOS031 JAD 10/03/95808:51

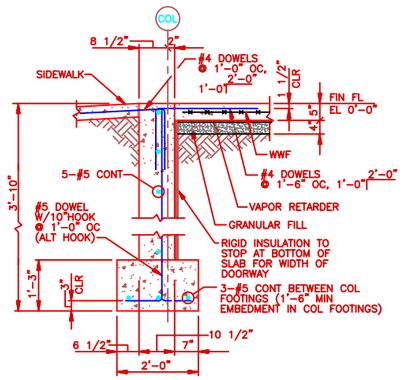

SECTION 1 S01
SCALE: NONE

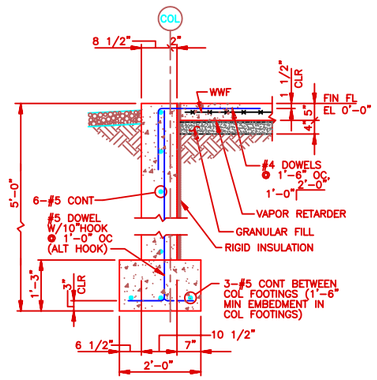

SECTION 2 S01 S04
SCALE: NONE

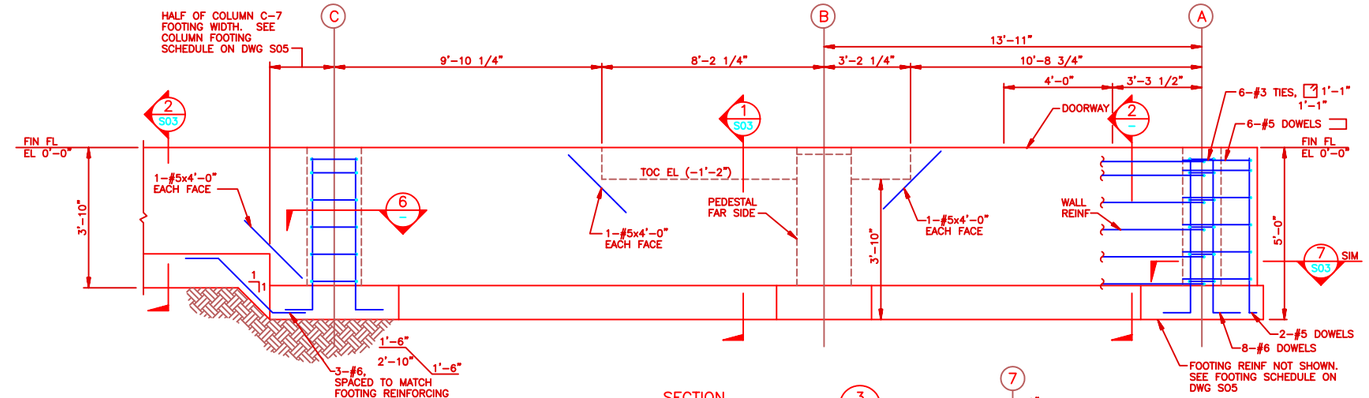

SECTION 3 S01
SCALE: NONE

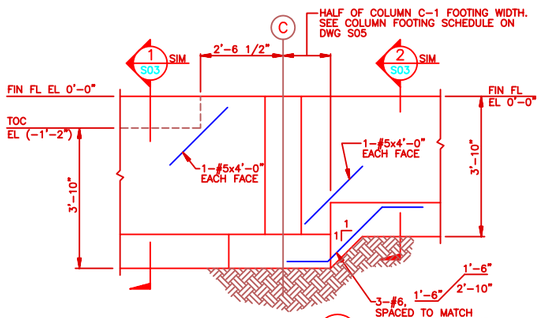

SECTION 4 S01
SCALE: NONE

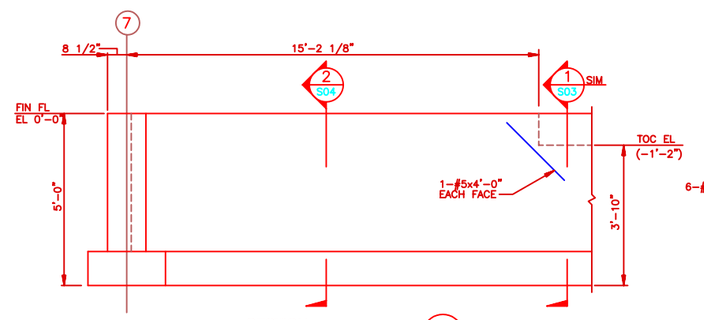

SECTION 5 S01
SCALE: NONE

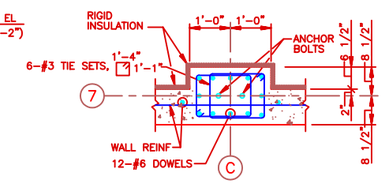

SECTION 6 –
SCALE: NONE

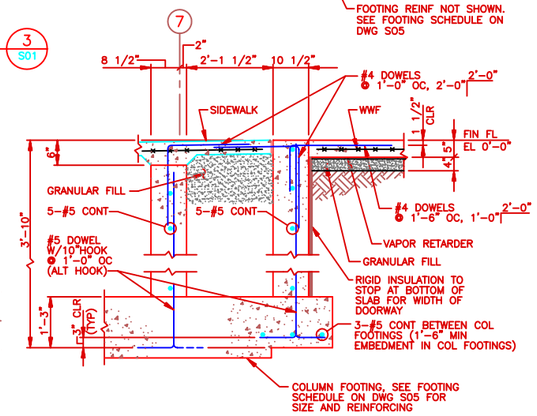

SECTION 7 S01
SCALE: NONE

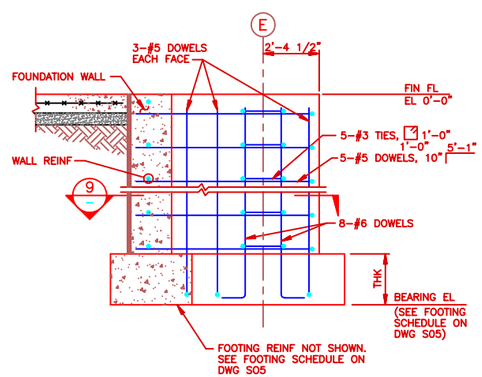

SECTION 8 S01
SCALE: NONE

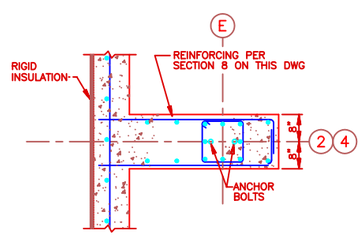

SECTION 9 –
SCALE: NONE

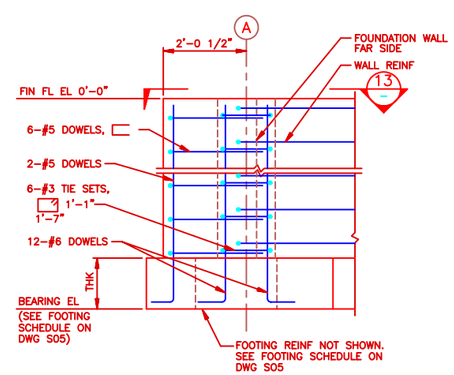

SECTION 10 S01
SCALE: NONE

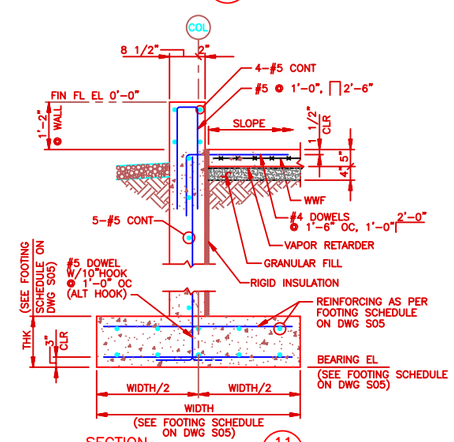

SECTION 11 S01
SCALE: NONE

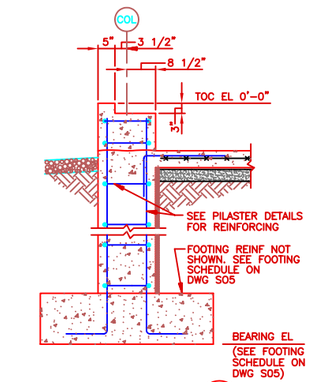

SECTION 12 S03
SCALE: NONE

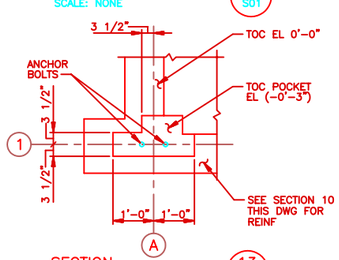

SECTION 13 –
SCALE: NONE

NO.	DATE	PREPARED BY	CHECKED BY	ENG APPROVED	ACTN/CUSTR APPROVED	DESCRIPTION OF REVISION
1	10/9/95	JAD	MAS	ERP/RRW	FGR/JTS	REVISED PER AS-BUILT CONDITIONS

WFO / NEXRAD PROGRAM
PROJECT NO. I001

PROGRAM MANAGEMENT SERVICES CONTRACTOR
FLUOR DANIEL
GOULD EVANS ARCHITECTS, P.A.
KANSAS CITY, MO. U.S.A.

SAFETY SHOULD ALWAYS BE FIRST WITH EVERY TASK YOU DO

SEPO

DRAWN FUENFHAUSEN
CHECKED JR FEAKER
SUP'V. ENGR. D LOHE
ENGR/PROJ. MGR. BLR/RRW
ACCPT/CUSTR. EHM/JTS

SPECIAL ENGINEERING PROGRAM OFFICE (SEPO)

WEATHER FORECAST OFFICE
GREENVILLE/SPARTANBURG, SC

FOUNDATION SECTIONS AND DETAILS SHT 2 OF 2

044131-	SIZE 5	DWG. NO. S04	CLIN. 10	REV. 1

FDSP0043 K205040 JAF 03/10/94@14:06

COLUMN FOOTING SCHEDULE

LOCATION	FTG SIZE (LG x W x THK)	REINFORCING TOP	REINFORCING BOTTOM	BEARING EL	PILASTER DETAIL	COMMENTS
A-1	4'-1"x4'-1"x1'-3"	5-#4 EW	5-#4 EW	-5'-0"	SEE SEC 10 ON DWG S04	-
A-2	4'-6"x4'-6"x1'-3"	6-#4 EW	6-#4 EW	-5'-0"	SEE DTL 19 ON DWG S03	-
A-4	32'-0"x3'-0"x1'-3"	4-#5 L 33-#4 T	4-#5 L 33-#4 T	-5'-0"	SEE DTL 11 ON DWG S03	POSITION LONGITUDINALLY PER DIMENSIONS ON DWG S01
A-6	SEE A-4	-	-	-	SEE DTL 11 ON DWG S03	-
A-7	4'-1"x4'-1"x1'-3"	5-#4 EW	5-#4 EW	-5'-0"	SEE SEC 3 ON DWG S04	-
B-1	3'-0"x3'-0"x1'-3"	4-#4 EW	4-#4 EW	-5'-0"	SIM TO DTL 19 ON DWG S03	-
B-7	3'-0"x3'-0"x1'-3"	4-#4 EW	4-#4 EW	-5'-0"	SIM TO DTL 19 ON DWG S03	-
C-1	9'-3"x4'-0"x1'-3"	6-#4 L 10-#4 T	6-#4 L 10-#4 T	-5'-0"	SEE DTL 13 ON DWG S03	POSITION LONGITUDINALLY PER DIMENSIONS ON DWG S01
C-3	6'-6"x6'-6"x1'-3"	8-#4 EW	8-#4 EW	-4'-6"	SEE SEC 14 ON DWG S03	-
C-5	6'-6"x6'-6"x1'-3"	8-#4 EW	8-#4 EW	-4'-6"	SEE SEC 14 ON DWG S03	-
C-7	5'-6"x5'-6"x1'-3"	7-#4 EW	7-#4 EW	-5'-0"	SEE DET 10 ON DWG S03	-
D-1	29'-2"x4'-0"x1'-6"	13-#5 L 30-#4 T	13-#5 L 30-#4 T	-4'-1"	SEE DTL 12 ON DWG S03	POSITION LONGITUDINALLY PER DIMENSIONS ON DWG S01
D-7	29'-7"x4'-7"x1'-3"	15-#6 L 30-#4 T	15-#6 L 30-#4 T	-3'-10"	SEE DTL 9 ON DWG S03	POSITION LONGITUDINALLY PER DIMENSIONS ON DWG S01
E-1	SEE D-1	-	-	-	SEE SEC 4 ON DWG S03	-
E-2	7'-3"x4'-0"x1'-3"	5-#4 L 8-#4 T	5-#4 L 8-#4 T	-3'-10"	SEE SEC 8 ON DWG S04	POSITION LONGITUDINALLY PER DIMENSIONS ON DWG S01
E-4	7'-3"x4'-0"x1'-3"	5-#4 L 8-#4 T	5-#4 L 8-#4 T	-3'-10"	SEE SEC 8 ON DWG S04	POSITION LONGITUDINALLY PER DIMENSIONS ON DWG S01
E-6	28'-2 1/2"x4'-1"x1'-3"	9-#5 L 29-#4 T	9-#5 L 29-#4 T	-3'-10"	SEE DTL 8 ON DWG S03	POSITION LONGITUDINALLY PER DIMENSIONS ON DWG S01
E-7	SEE E-6 (& D-7)	-	-	-	SEE SEC 5 ON DWG S03	-

NOTES:
1. FOOTINGS LISTED ON FOOTING SCHEDULE ARE CENTERED ON CENTER LINE OF COLUMN ROWS SHOWN ON DWG S01 UNLESS NOTED OTHERWISE.
2. FOOTING BEARING ELEVATIONS ARE BASED ON FINISH FLOOR ELEVATION OF 0'-0"
3. T DESIGNATES TRANSVERSE REINFORCING
   L DESIGNATES LONGITUDINAL REINFORCING
   EW DESIGNATES EACH WAY

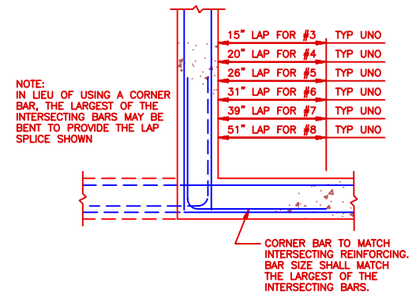

TYPICAL CORNER BAR DETAIL
SCALE: NONE
THE REINFORCING PATTERN SHOWN SHALL BE USED AT ALL CONCRETE CORNERS AND WALL INTERSECTIONS.

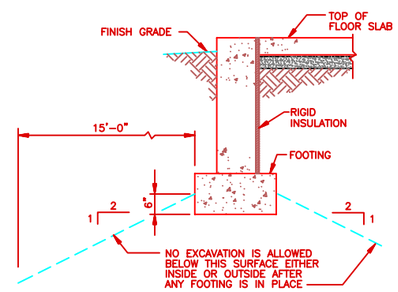

TYPICAL EXCAVATION @ FOOTING DETAIL
SCALE: NONE

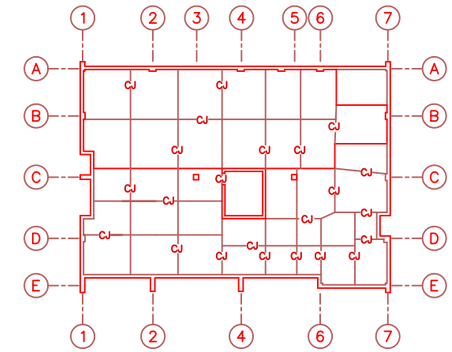

CONTROL JOINT PLAN
SCALE: 1/16"=1'-0"
(FOR BUILDING ORIENTATION SEE DWG C02)

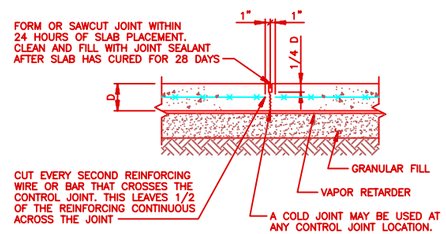

TYPICAL CONTROL JOINT DETAIL
SCALE: NONE

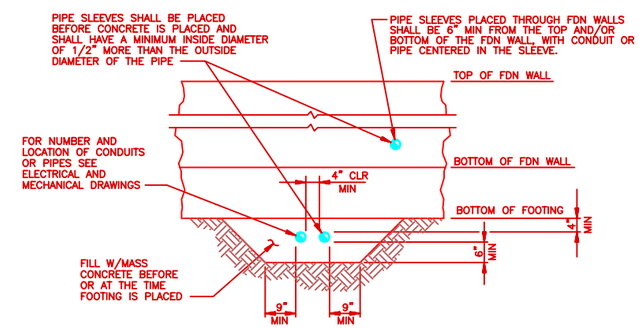

TYPICAL PIPE OR CONDUIT @ FOOTING DETAIL
SCALE: NONE
NOTE: IF CONDUIT OR PIPE IS BELOW FOOTING MORE THAN 3'-0" NO CONCRETE ENCASEMENT IS REQUIRED

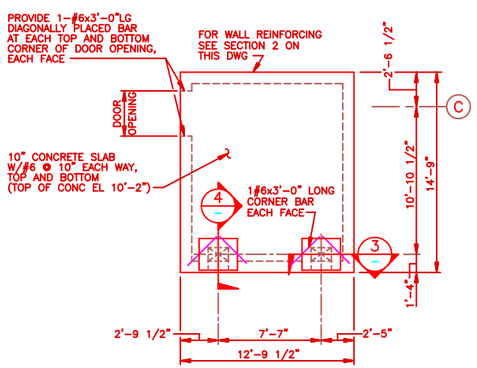

READY ROOM ROOF PLAN
SCALE: 1/4"=1'-0"
(FOR ORIENTATION SEE DWG S01)

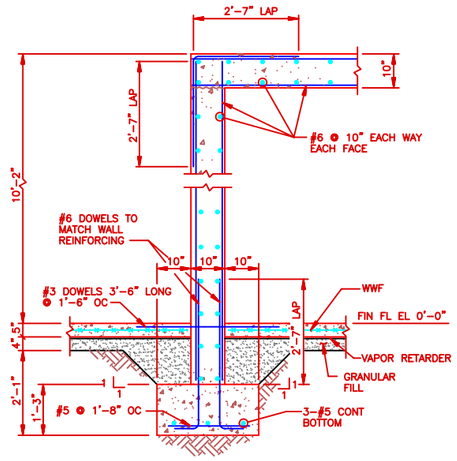

SECTION 1 S01
SCALE: NONE

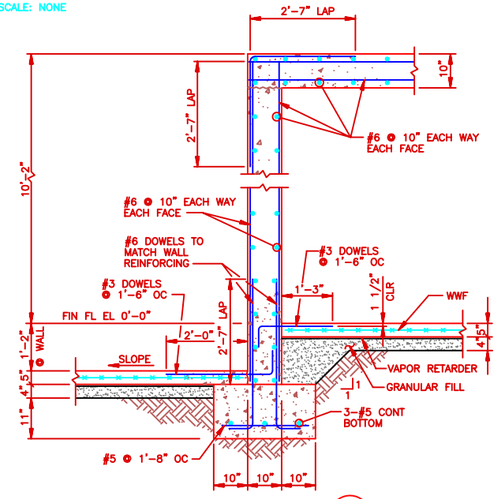

SECTION 2 S01
SCALE: NONE

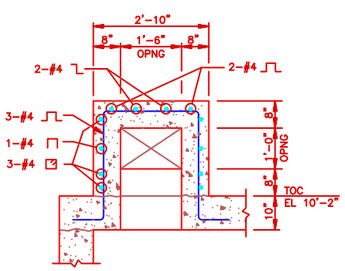

SECTION 3
SCALE: NONE

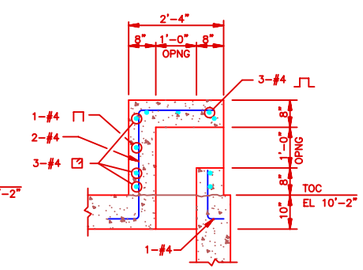

SECTION 4
SCALE: NONE

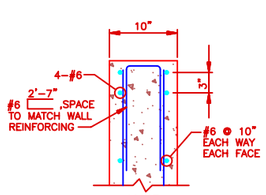

JAMB
NOTE: HEAD IS SIMILAR TO JAMB
DETAIL 5 S01
SCALE: NONE

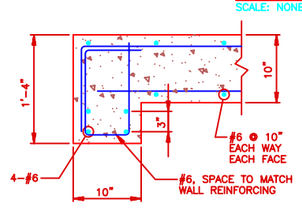

JAMB
DETAIL 6 S01
SCALE: NONE

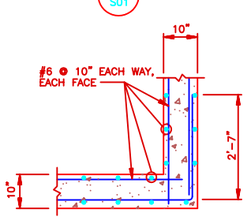

DETAIL 7 S01
SCALE: NONE

0 2' 4' 8' 12'
SCALE: 1/4"=1'-0"

0 8' 16' 32' 48'
SCALE: 1/16"=1'-0"

NO.	DATE	PREPARED BY	CHECKED BY	RDI APPROVED	ACOE/COTR APPROVED	DESCRIPTION OF REVISION
1	10/9/95	JAD	MAS	ERP/RRW	FGR/JTS	REVISED PER AS-BUILT CONDITIONS

WFO / NEXRAD PROGRAM
PROJECT NO. 1001

PROGRAM MANAGEMENT SERVICES CONTRACTOR
FLUOR DANIEL
GOULD EVANS ARCHITECTS, P.A.
KANSAS CITY, MO. U.S.A.

SAFETY SHOULD ALWAYS BE FIRST WITH EVERY TASK YOU DO

SEPO

DRAWN FUERNHAUSEN
CHECKED JR FEAKER
SUPV. ENGR. D LOHE
ENGR/PROJ. MGR. BLR/RRW
ACOTR/COTR EPM/JTS

SPECIAL ENGINEERING PROGRAM OFFICE (SEPO)
WEATHER FORECAST OFFICE
GREENVILLE/SPARTANBURG, SC
MISCELLANEOUS CONCRETE DETAILS

044131-	5	S05	10	1
	SIZE	DWG. NO.	CLIN.	REV.

FDSP0043 KO05051 JAD 10/03/95@09:27

COLUMN SCHEDULE

COLUMN LOCATION	MEMBER SIZE	BOTTOM OF BASE PL EL	ANCHOR BOLT MARK NO	BASE PLATE TYPE	BASE PLATE SIZE	A	B	C	D	E	REMARKS
A–1	4"ø STD PIPE	–0'–2"	AB–1	BP–1	1x6x1'–0"	3"	2"	4"	1 1/16"		
A–2	4"ø STD PIPE	–0'–2"	AB–1	BP–1	1x6x1'–0"	3"	2"	4"	1 1/16"		
A–4	TS 6x6x3/8	–0'–2"	AB–2	–	–	–	–	–	–		SEE DETAIL SHEET S08
A–6	TS 6x6x3/8	–0'–2"	AB–2	–	–	–	–	–	–		SEE DETAIL SHEET S08
A–7	4"ø STD PIPE	0'–1"	AB–1	BP–1	1x6x1'–0"	3"	2"	4"	1 1/16"		
B–1	4"ø STD PIPE	–0'–2"	AB–1	BP–1	1x6x1'–0"	3"	2"	4"	1 1/16"		
B–7	4"ø STD PIPE	–0'–2"	AB–1	BP–1	1x6x1'–0"	3"	2"	4"	1 1/16"		
C–1	4"ø STD PIPE	0'–1"	AB–1	BP–1	1x6x1'–0"	3"	2"	4"	1 1/16"		
C–3	5"ø STD PIPE	0'–1"	AB–1	BP–1	1x6x1'–0"	3"	2"	4"	1 1/16"		
C–5	5"ø STD PIPE	0'–1"	AB–1	BP–1	1x6x1'–0"	3"	2"	4"	1 1/16"		
C–7	4"ø STD PIPE	0'–1"	AB–1	BP–1	1x6x1'–0"	3"	2"	4"	1 1/16"		
D–1	TS 6x6x3/8	0'–1"	AB–2	–	–	–	–	–	–		SEE DETAIL SHEET S08
D–7	TS 6x6x3/8	0'–1"	AB–2	–	–	–	–	–	–		SEE DETAIL SHEET S08
E–1	TS 6x6x3/8	0'–1"	AB–2	–	–	–	–	–	–		SEE DETAIL SHEET S08
E–2	4"ø STD PIPE	0'–1"	AB–1	BP–1	1x6x1'–0"	3"	2"	4"	1 1/16"		
E–4	4"ø STD PIPE	0'–1"	AB–1	BP–1	1x6x1'–0"	3"	2"	4"	1 1/16"		
E–6	TS 6x6x3/8	0'–1"	AB–2	–	–	–	–	–	–		SEE DETAIL SHEET S08
E–7	TS 6x6x3/8	0'–1"	AB–2	–	–	–	–	–	–		SEE DETAIL SHEET S08

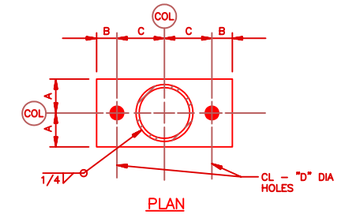

PLAN

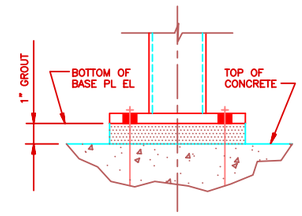

ELEVATION

BASE PLATE TYPE BP–1

SCALE: NONE

ANCHOR BOLT SCHEDULE

MARK	LOCATION	NO	TYPE	TOP OF BOLT EL	PROJ	EMBED–MENT	AB DIAMETER	LENGTH	THREAD	PLATE	SLEEVE DIA	REMARKS
AB–1	COLUMN BASES SEE DWG S01	22	1	SEE DWG S01	0'–4 1/2"	1'–0"	3/4"	–	0'–3 1/2"	1/4"x3"x3"	–	GALVANIZE
AB–2	COLUMN BASES / DIAGONAL BRACE SEE DWG S01	14	3	SEE DWG S01	0'–6 3/4"	1'–10"	1 3/8"	–	0'–4 1/2"	1/4"x3"x3"	–	GALVANIZE; AB PROJ CRITICAL SO AS TO FIT UNDER GUSSET PLATE
AB–3	STAIR LANDING SEE DWG S09	2	4	SEE DWG S09	0'–2 1/2"	0'–6"	3/8"	–	0'–3"	–	–	GALVANIZE
AB–4	STAIR POSTS SEE DWG S09	4	2	SEE DWG S09	0'–3 1/2"	0'–8 1/2"	3/4"	–	0'–3"	–	–	GALVANIZE
AB–5	STUD WALL SEE DWG S10	–	4	VARIES	0'–2"	0'–4"	3/8"	–	0'–2 1/2"	–	–	GALVANIZE
AB–6	STRAP BRACE ANCHOR SEE DWG S11	16	3	SEE DWG S11	0'–5 1/2"	2'–2"	1 1/4"	–	0'–4 1/2"	1/4x3x3	–	GALVANIZE
AB–7	GENERATOR PAD SEE DWG S11	8	5	SEE DWG S11	0'–3"	0'–10"	1/2"	–	0'–3"	–	–	GALVANIZE

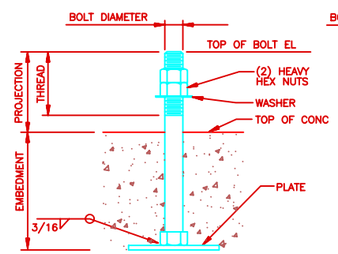

TYPE 1

ANCHOR BOLT DETAIL

SCALE: NONE

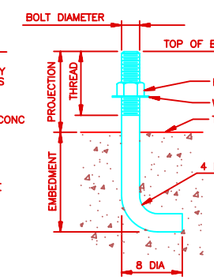

TYPE 2

ANCHOR BOLT DETAIL

SCALE: NONE

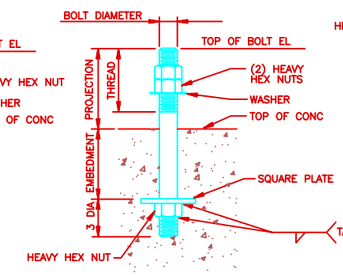

TYPE 3

ANCHOR BOLT DETAIL

SCALE: NONE

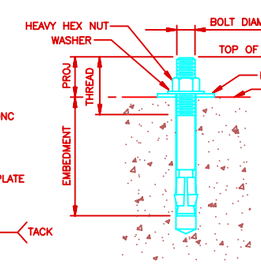

NOTE:

TYPE 4 ANCHOR BOLTS SHALL BE GROUP II, TYPE 4, CLASS 1 OR 2, EXPANSION BOLT ANCHORS COMPLYING WITH FEDERAL SPECIFICATION FF–S–325, INTERIM AMENDMENT 3.

TYPE 4

ANCHOR BOLT DETAIL

SCALE: NONE

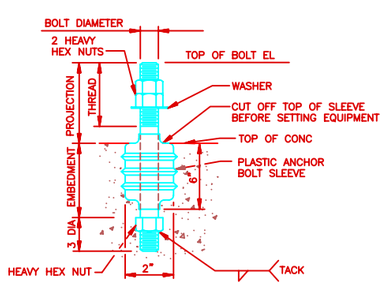

TYPE 5

ANCHOR BOLT DETAIL

SCALE: NONE

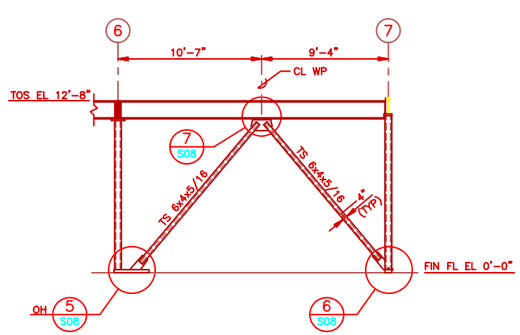

DIAGONAL BRACING ELEVATION @ COLUMN ROW E

SCALE: 1/4"=1'–0"

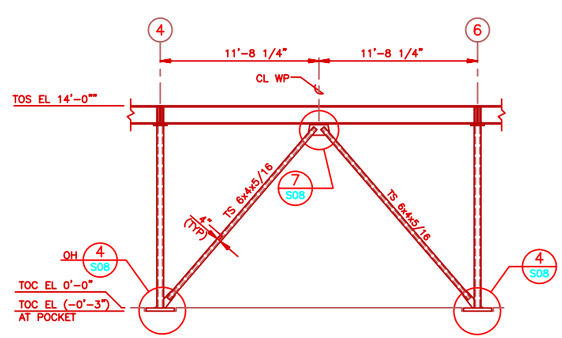

DIAGONAL BRACING ELEVATION @ COLUMN ROW A

SCALE: 1/4"=1'–0"

0 2' 4' 8' 12'

SCALE: 1/4"=1'–0"

NO.	DATE	PREPARED BY	CHECKED BY	RSE APPROVED	ACOR/CORR APPROVED	DESCRIPTION OF REVISION
1	10/9/95	JAD	MAS	ERP/RRW	FGR/JTS	REVISED PER AS–BUILT CONDITIONS

WFO / NEXRAD PROGRAM
PROJECT NO. 1001

PROGRAM MANAGEMENT SERVICES CONTRACTOR
FLUOR DANIEL
GOULD EVANS ARCHITECTS, P.A.
KANSAS CITY, MO. U.S.A.

SAFETY SHOULD ALWAYS BE FIRST WITH EVERY TASK YOU DO

DRAWN: FUENFHAUSEN
CHECKED: JR FEAKER
SUP'V. ENGR.: D LOHE
ENGR/PROJ. MGR.: BLR/RRW
ACOR'R/CORR: EPM/JTS

SPECIAL ENGINEERING PROGRAM OFFICE (SEPO)

WEATHER FORECAST OFFICE
GREENVILLE/SPARTANBURG, SC

COLUMN AND ANCHOR BOLT SCHEDULES/FRAMING ELEV

044131–	SIZE 5	DWG. NO. S06	CLIN. 10	REV. 1

FDSP0043 K0050561 JAD 10/03/95#09:32

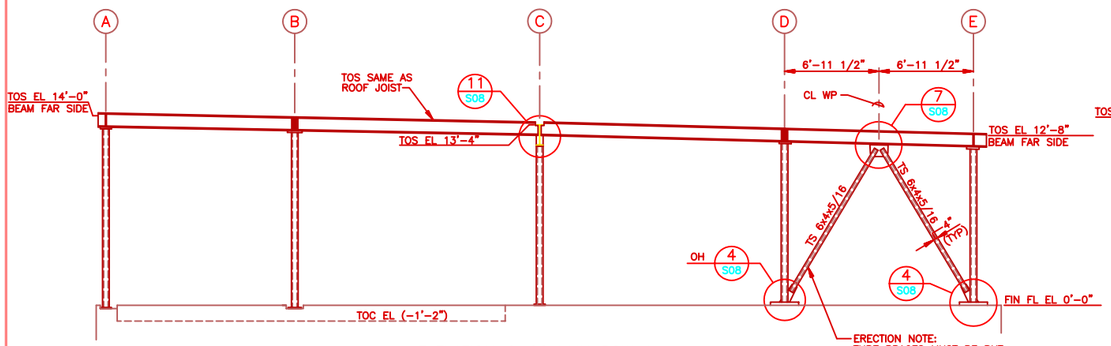

ELEVATION @ COLUMN ROW 1

SCALE: 1/4"=1'-0"

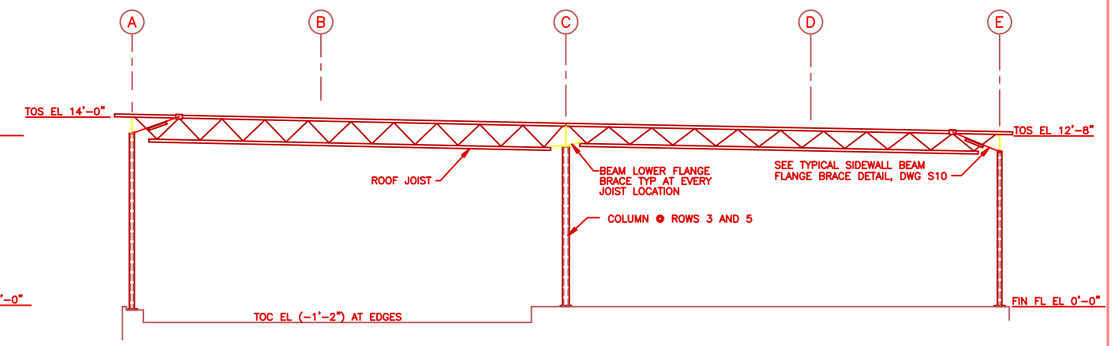

ELEVATION @ COLUMN ROW 6
ELEVATION @ COLUMN ROWS 2 & 4 SIMILAR

SCALE: 1/4"=1'-0"

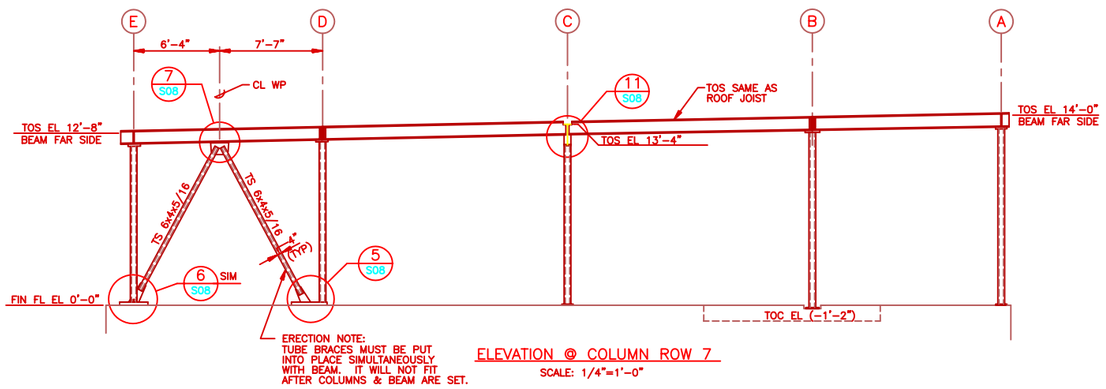

ELEVATION @ COLUMN ROW 7

SCALE: 1/4"=1'-0"

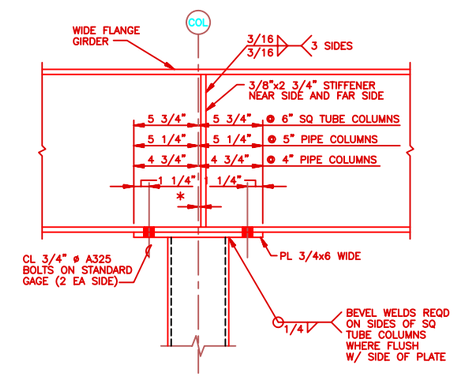

* CENTER THE STIFFENERS ON THE COLUMN UNLESS A BEAM IS FRAMING INTO THE GIRDER AT THE COLUMN. IF A BEAM IS FRAMING INTO THE GIRDER, OFFSET THE STIFFENER 1/2 THE BEAM WEB THICKNESS AND BOLT THE BEAM TO THE STIFFENER.

TYPICAL COLUMN CONNECTION

SCALE: NONE

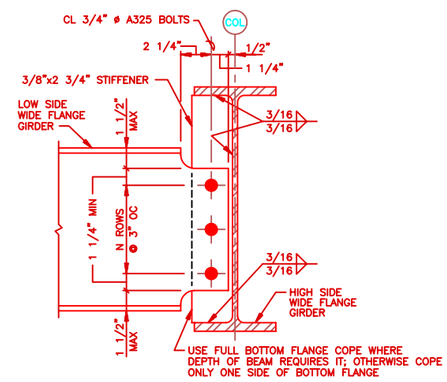

N=2 MINIMUM
N=3 MINIMUM FOR W14 & W16 HIGH SIDE BEAM

TYPICAL FRAMING CONNECTION

SCALE: NONE

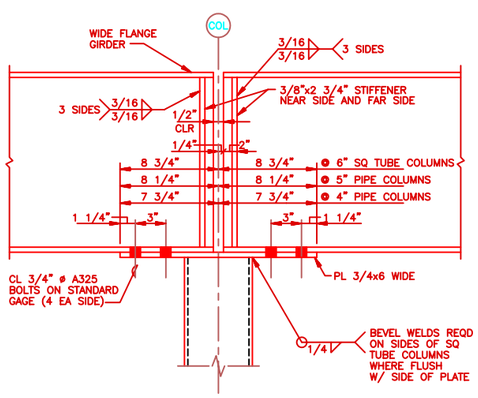

TYPICAL COLUMN CONNECTION

SCALE: NONE

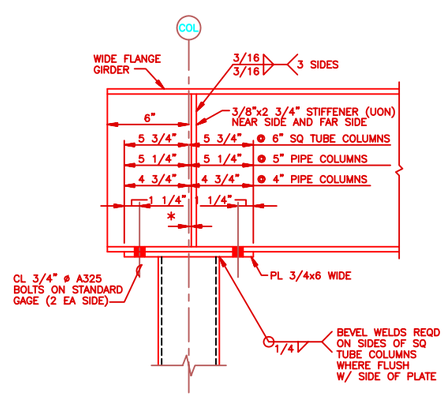

* CENTER THE STIFFENERS ON THE COLUMN UNLESS A BEAM IS FRAMING INTO THE GIRDER AT THE COLUMN. IF A BEAM IS FRAMING INTO THE GIRDER, OFFSET THE STIFFENER 1/2 THE BEAM WEB THICKNESS AND BOLT THE BEAM TO THE STIFFENER.

TYPICAL COLUMN CONNECTION

SCALE: NONE

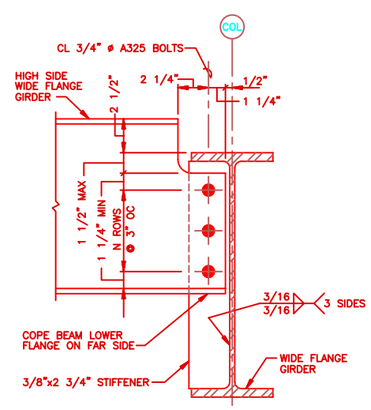

N=2 MINIMUM
N=3 FOR W14 & W16 HIGH SIDE BEAM

TYPICAL FRAMING CONNECTION

SCALE: NONE

0 2' 4' 8' 12'

SCALE: 1/4"=1'-0"

NO.	DATE	PREPARED BY	CHECKED BY	RSE APPROVED	ACOR/CORR APPROVED	DESCRIPTION OF REVISION
1	10/9/95	JAD	MAS	ERP/RRW	FGR/JTS	REVISED PER AS-BUILT CONDITIONS

WFO / NEXRAD PROGRAM
PROJECT NO. 1001

PROGRAM MANAGEMENT SERVICES CONTRACTOR
FLUOR DANIEL
GOULD EVANS ARCHITECTS, P.A.
KANSAS CITY, MO. U.S.A.

SAFETY SHOULD ALWAYS BE FIRST WITH EVERY TASK YOU DO

DRAWN: FUENFHAUSEN
CHECKED: JR FEAKER
SUP'V. ENGR.: D LOHE
ENGR/PROJ. MGR.: BLR/RRW
ACOR'T/CORR.: EHM/JTS

SPECIAL ENGINEERING PROGRAM OFFICE (SEPO)

WEATHER FORECAST OFFICE
GREENVILLE/SPARTANBURG, SC

FRAMING ELEVATIONS AND
MISC. STEEL DETAILS

SIZE	DWG. NO.	CLIN.	REV.
044131- 5	S07	10	1

FDSP0043 KC005071 JAD 10/03/95@09:36

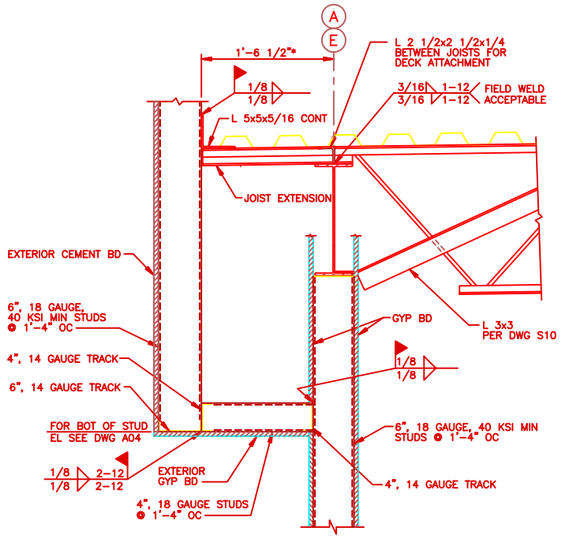

* NOTE: DIMENSION BASED UPON THEORETICAL CL OF BEAM. FIELD ADJUST AS REQUIRED TO ACCOMMODATE SWEEP OF BEAM TO PRODUCE TRUE PARAPET LINE.

SECTION 1 / S02
SCALE: NONE

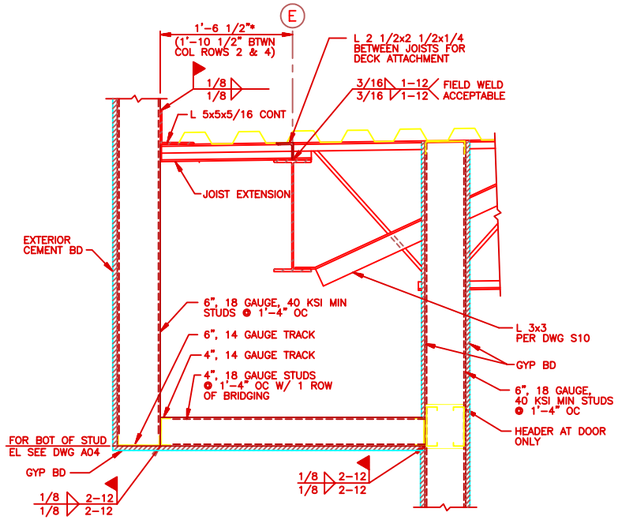

* NOTE: DIMENSION BASED UPON THEORETICAL CL OF BEAM. FIELD ADJUST AS REQUIRED TO ACCOMMODATE SWEEP OF BEAM TO PRODUCE TRUE PARAPET LINE.

SECTION 2 / S02
SCALE: NONE

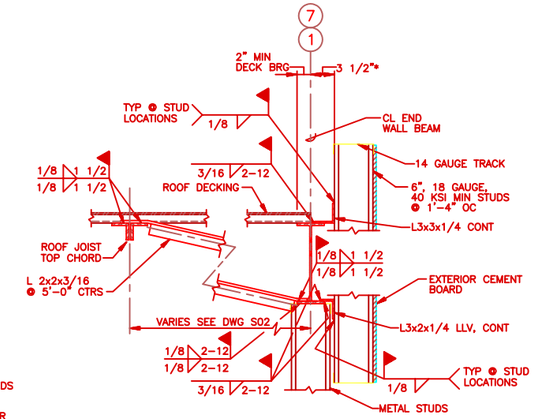

*NOTE: DIMENSION BASED UPON THEORETICAL CL BEAM. FIELD ADJUST TO ACCOMMODATE SWEEP OF BEAM TO PRODUCE TRUE PARAPET LINE.

SECTION 3 / S02
SCALE: NONE

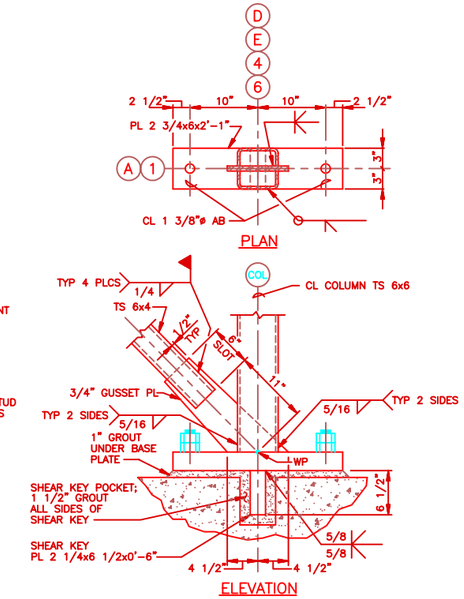

DETAIL 4 / S06 S07
SCALE: NONE

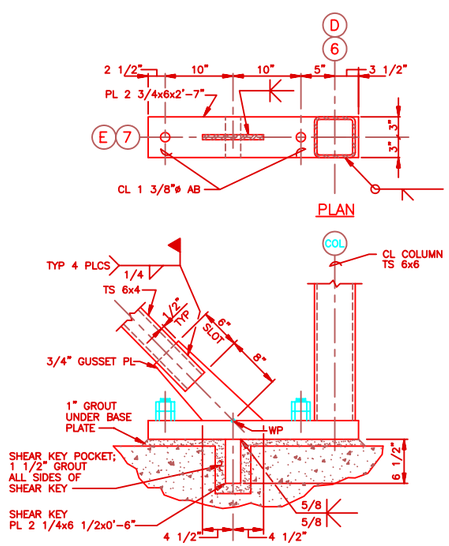

DETAIL 5 / S06 S07
SCALE: NONE

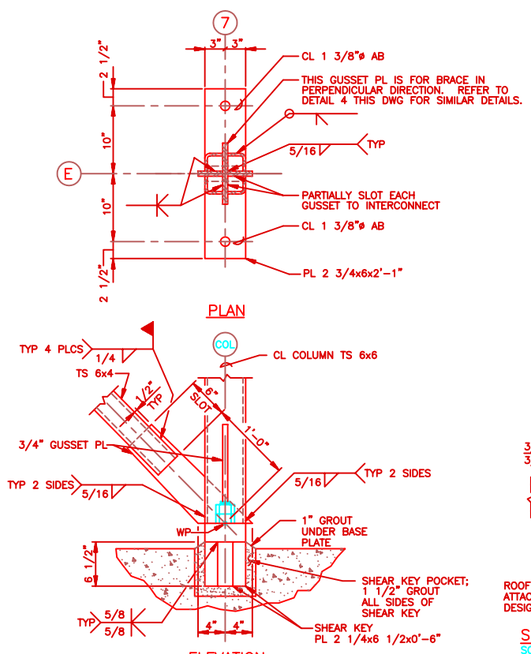

DETAIL 6 / S06 S07
SCALE: NONE

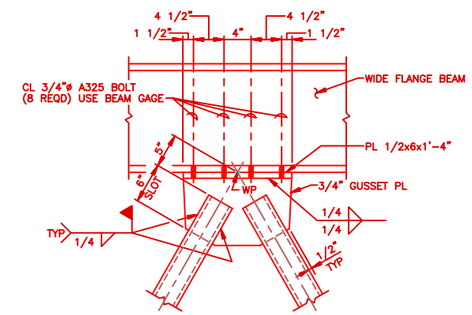

DETAIL 7 / S06 S07
SCALE: NONE

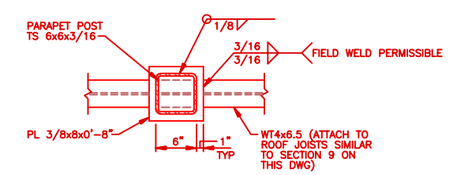

DETAIL 8 / S02
SCALE: NONE

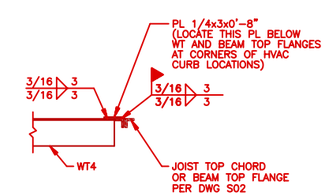

ROOF DECK NOT SHOWN FOR CLARITY; ATTACH DECK TO WT TO ACHIEVE DESIGN DIAPHRAGM SHEAR CAPACITY

SECTION 9 / S02
SCALE: NONE

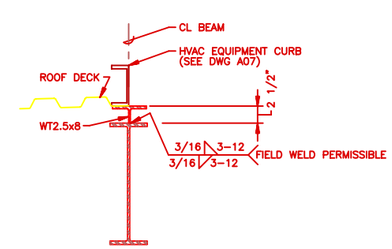

SECTION 10 / S02
SCALE: NONE

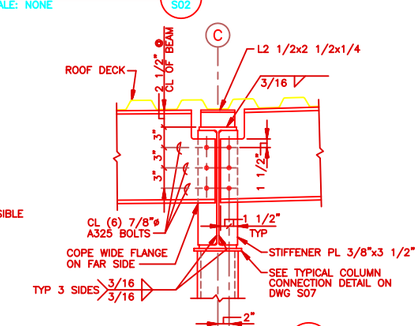

DETAIL 11 / S07
SCALE: NONE

NO.	DATE	PREPARED BY	CHECKED BY	PM APPROVED	ACM/CORR APPROVED	DESCRIPTION OF REVISION
1	10/9/95	JAD	MAS	ERP/RRW	FGR/JTS	REVISED PER AS-BUILT CONDITIONS

WFO / NEXRAD PROGRAM
PROJECT NO. I001

PROGRAM MANAGEMENT SERVICES CONTRACTOR
FLUOR DANIEL
GOULD EVANS ARCHITECTS, P.A.
KANSAS CITY, MO. U.S.A.

SAFETY SHOULD ALWAYS BE FIRST WITH EVERY TASK YOU DO

DRAWN: FUENFHAUSEN
CHECKED: JR PEAKER
SUP'V. ENGR: D LOHE
ENGR/SPECIAL MGR: BLR/RRW
ACCRD./CORR. ENGR: EKM/JTS

SPECIAL ENGINEERING PROGRAM OFFICE (SEPO)

WEATHER FORECAST OFFICE
GREENVILLE/SPARTANBURG, SC

FRAMING SECTIONS AND DETAILS SHEET 1 OF 3

044131-	SIZE 5	DWG. NO. S08	CLIN. 10	REV. 1

FDSP0043 KCOS081 JAD 10/03/95@09:40

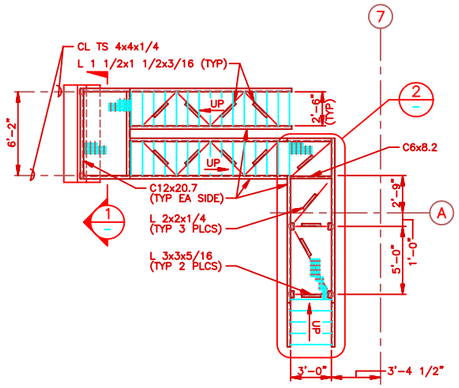

ROOF TOP ACCESS STAIR FRAMING PLAN
SCALE: 1/4"=1'-0"

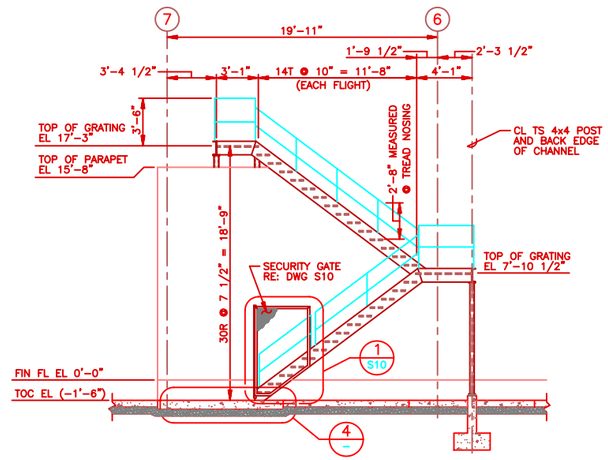

ROOF TOP ACCESS STAIR ELEVATION
SCALE: 1/4"=1'-0"

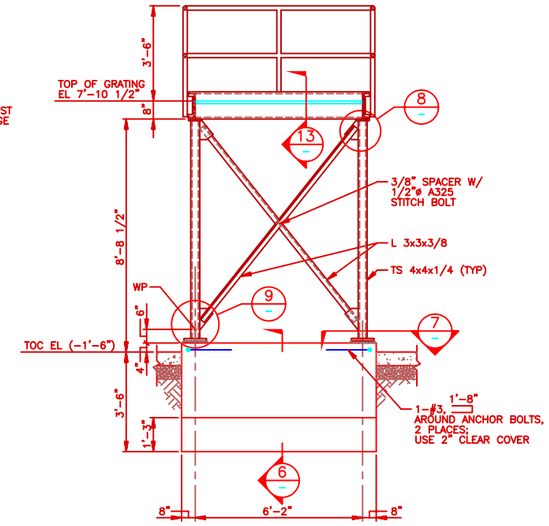

SECTION 1
SCALE: NONE

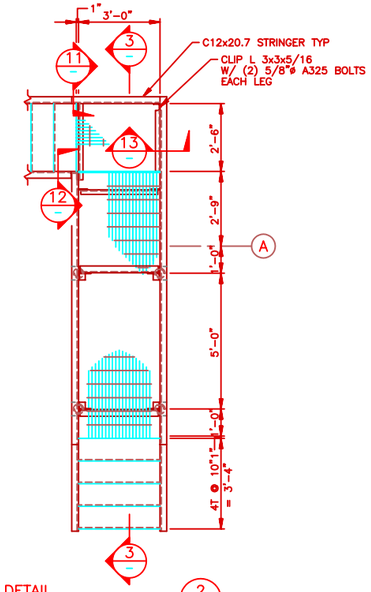

DETAIL 2
SCALE: 1/2"=1'-0"

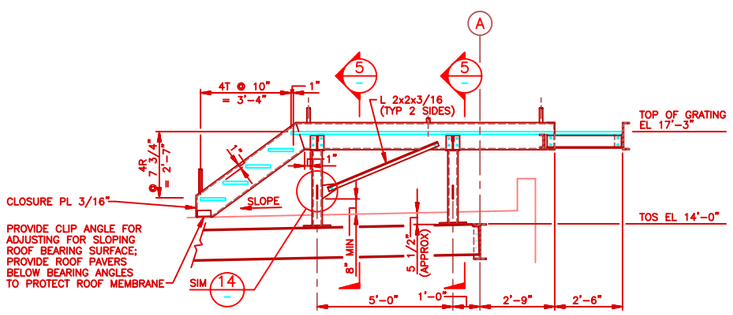

SECTION 3
SCALE: NONE

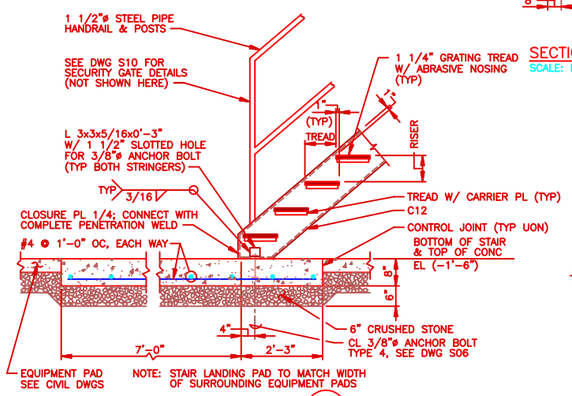

DETAIL 4
SCALE: NONE

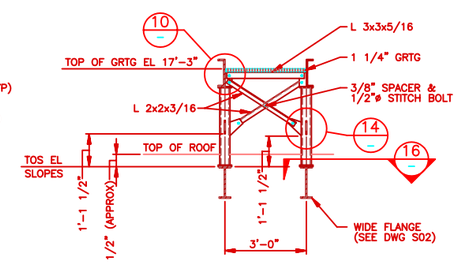

SECTION 5
SCALE: NONE

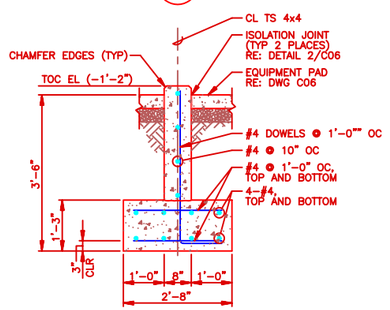

SECTION 6
SCALE: NONE

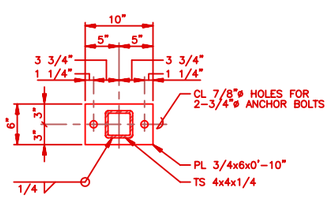

SECTION 7
SCALE: NONE

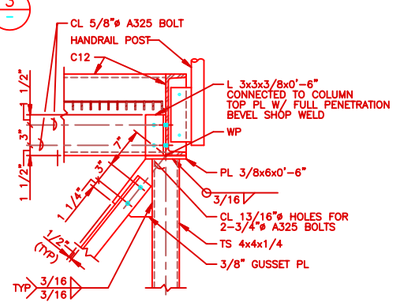

DETAIL 8
SCALE: NONE

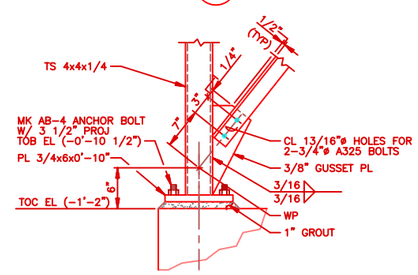

DETAIL 9
SCALE: NONE

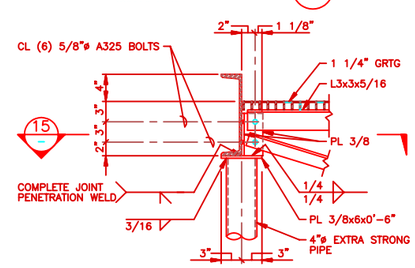

DETAIL 10
SCALE: NONE

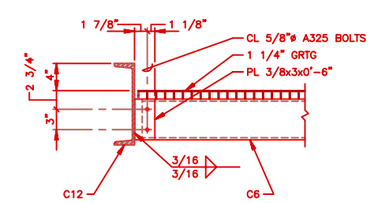

SECTION 11
SCALE: NONE

NOTES

1. HOT DIP GALVANIZE ALL STEEL REQUIRED FOR THE STAIR, PLATFORM, AND SECURITY GATE.
2. HANDRAIL & POSTS SHALL BE CONSTRUCTED OF 1 1/2"ø STD STEEL PIPE (UON).
3. HANDRAIL SHALL HAVE 4'-9" MAX POST SPACING (UON).

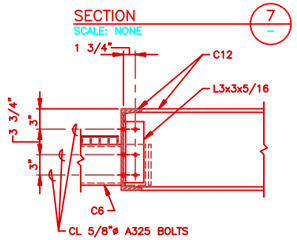

SECTION 12
SCALE: NONE

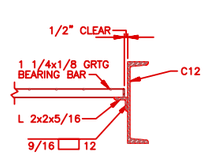

SECTION 13
SCALE: NONE

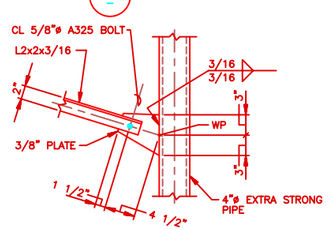

DETAIL 14
SCALE: NONE

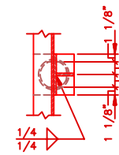

SECTION 15
SCALE: NONE

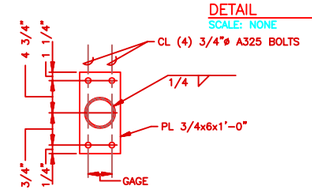

SECTION 16
SCALE: NONE

SCALE: 1/2"=1'-0"

SCALE: 1/4"=1'-0"

NO.	DATE	PREPARED BY	CHECKED BY	PM APPROVED	ACTM/CCTR APPROVED	DESCRIPTION OF REVISION
1	10/9/95	JAD	MAS	ERP/RRW	FGR/JTS	REVISED PER AS-BUILT CONDITIONS

WFO / NEXRAD PROGRAM
PROJECT NO. 1001

PROGRAM MANAGEMENT SERVICES CONTRACTOR
FLUOR DANIEL
GOULD EVANS ARCHITECTS, P.A.
KANSAS CITY, MO. U.S.A.

SAFETY SHOULD ALWAYS BE FIRST WITH EVERY TASK YOU DO

DIVISION: FUENFHAUSEN
CHECKED: JR FEAKER
SUP'V. ENGR: D LONE
ENGR/PROJ. MGR: BLR/RRW
ACCPL/CCTR: EHM/JTS

SPECIAL ENGINEERING PROGRAM OFFICE (SEPO)

WEATHER FORECAST OFFICE
GREENVILLE/SPARTANBURG, SC

FRAMING SECTIONS AND DETAILS SHEET 2 OF 3

SIZE	DWG. NO.	CLR.	REV.
044131- 5	S09	10	1

FDSP0043 KCIC0991 JAD 10/03/95@09:47

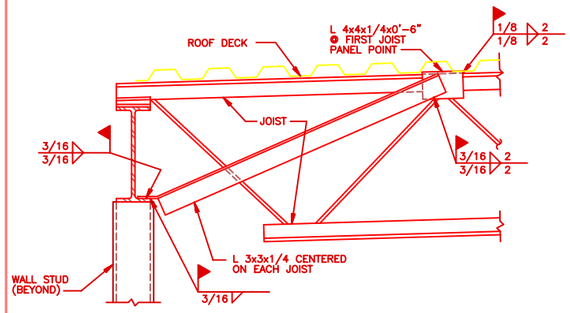

TYPICAL SIDEWALL BEAM FLANGE BRACE DETAIL
SCALE: NONE

NOTE: TYPICAL @ ALL PERIMETER SIDEWALL BEAMS IN WHICH WALL STUDS ARE ATTACHED.

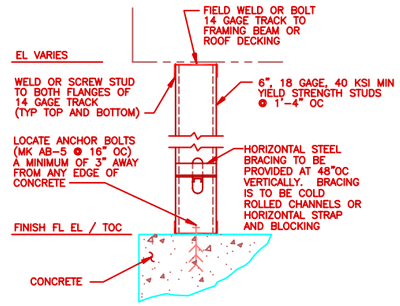

TYPICAL EXTERIOR METAL STUD WALL ANCHORAGE
SCALE: NONE

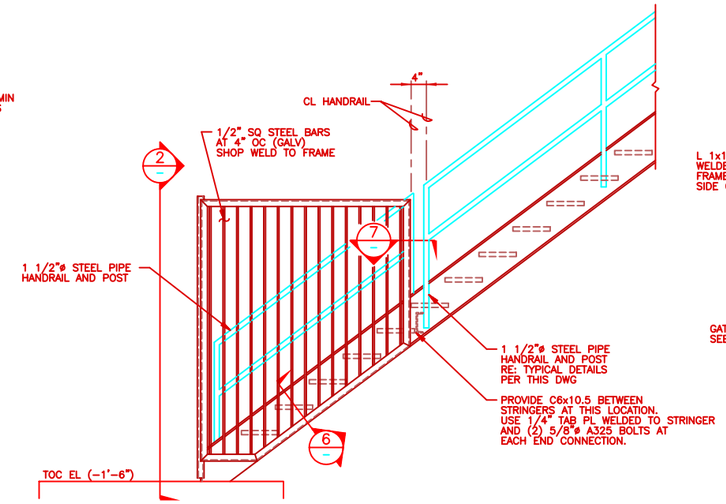

DETAIL 1 / S09
SCALE: 3/4"=1'-0"

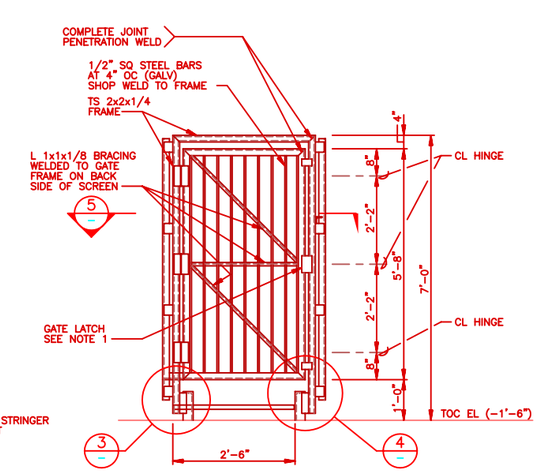

SECTION 2
SCALE: NONE

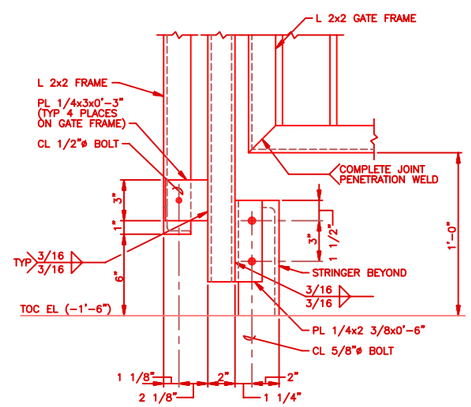

DETAIL 3
SCALE: NONE

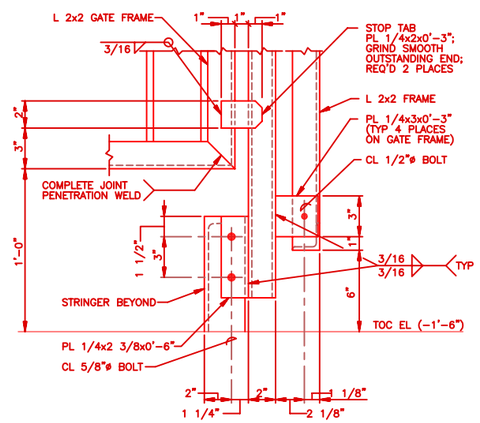

DETAIL 4
SCALE: NONE

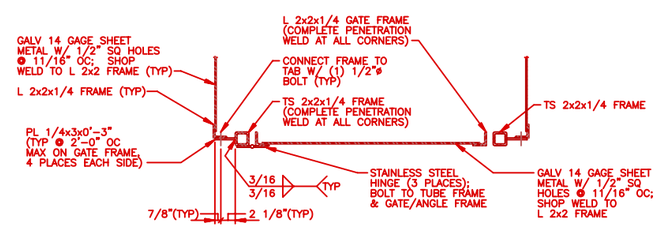

SECTION 5
SCALE: NONE

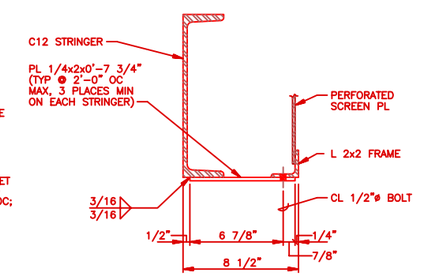

SECTION 6
SCALE: NONE

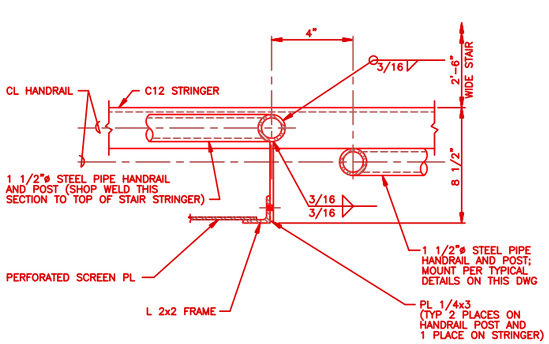

SECTION 7
SCALE: NONE

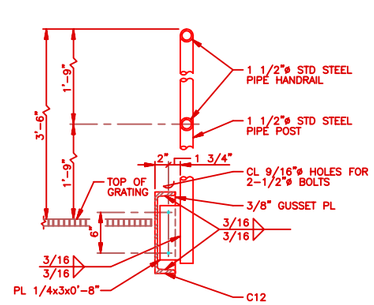

LANDING MOUNTED

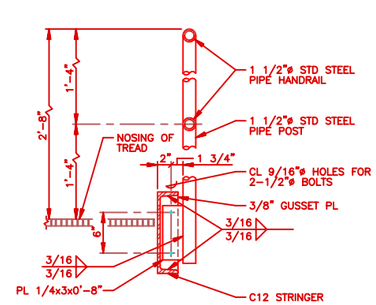

STRINGER MOUNTED

TYPICAL HANDRAIL DETAILS
SCALE: NONE

0 1' 2' 3' 4'
SCALE: 3/4"=1'-0"

NOTES

1. HEAVY DUTY GATE LATCH TO BE SELF-LATCHING, PADLOCKABLE, CORROSION RESISTANT, VERTICALLY ADJUSTABLE, AND CAPABLE OF WITHSTANDING A MINIMUM OF 200# HORIZONTAL LOAD IN THE DIRECTION OF GATE OPENING.

NO.	DATE	PREPARED BY	CHECKED BY	RSE APPROVED	ACOR/COTR APPROVED	DESCRIPTION OF REVISION
1	10/9/95	JAD	MAS	ERP/RRW	FGR/JTS	REVISED PER AS-BUILT CONDITIONS

WFO / NEXRAD PROGRAM
PROJECT NO. 1001

PROGRAM MANAGEMENT SERVICES CONTRACTOR
FLUOR DANIEL
GOULD EVANS ARCHITECTS, P.A.
KANSAS CITY, MO. U.S.A.

SAFETY SHOULD ALWAYS BE FIRST WITH EVERY TASK YOU DO

DRAWN FUENFHAUSEN
CHECKED JR FEAKER
SUP'V. ENGR. D LOHE
ENGR/PROJ. MGR. BLR/RRW
ACOR/COTR ERM/JTS

SPECIAL ENGINEERING PROGRAM OFFICE (SEPO)

WEATHER FORECAST OFFICE
GREENVILLE/SPARTANBURG, SC

FRAMING SECTIONS AND DETAILS SHEET 3 OF 3

044131-	5	S10	10	1
	SIZE	DWG. NO.	CLIN.	REV.

FD3P0043 KCOS101 JAD 10/03/95@10:41

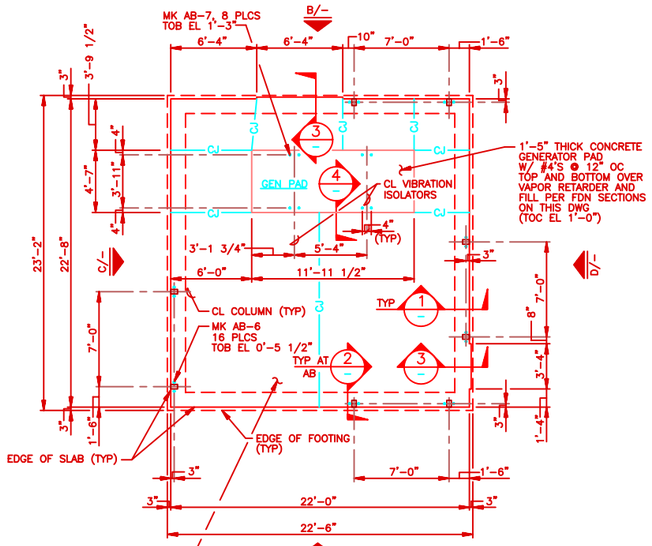

FOUNDATION PLAN
SCALE: 1/4"=1'-0"

NOTE: SEE DWG C06 FOR LOCATION, ORIENTATION, AND ACTUAL FIN FL EL

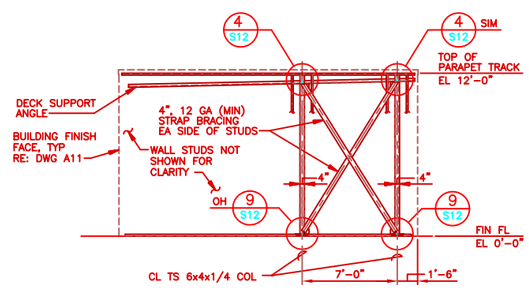

ELEVATION A
SCALE: 1/4" = 1'-0"

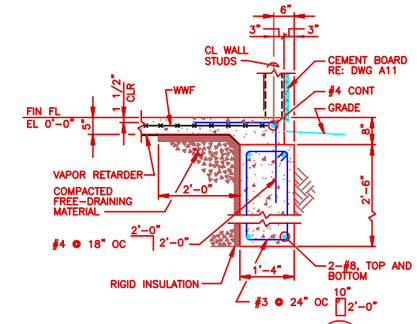

SECTION 1
SCALE: NONE

ROOF JOIST LOADING DIAGRAM

DEAD + LIVE LOAD	LIVE LOAD	DEAD + WIND LOAD
47 PLF	27 PLF	-43 PLF

NOTES

1. FOR DESIGN LOADS SEE NOTE 1 ON DRAWING S02.
2. FOR "CONCRETE NOTES" SEE DWG S01.
3. METAL JOISTS (COLD-FORMED) AND BRIDGING ON THIS SHEET SHALL BE DESIGNED FOR THE LOADS IN THE "ROOF JOIST LOADING DIAGRAM". JOIST DEFLECTION SHALL NOT EXCEED SPAN/240 FOR THE LIVE LOAD NOR DEAD + WIND LOAD. JOISTS SHALL BEAR ON WALL STUD. RE: DETAIL B ON DRAWING S12.
4. WALL AND PARAPET STUDS SHALL BE DESIGNED FOR THE INDICATED DESIGN LOADS. DEFLECTION SHALL NOT EXCEED SPAN/600 FOR THE WIND LOAD. MINIMUM WEAK AXIS MOMENT OF INERTIA = 6.060 IN^4 FOR BUILT-UP COLUMNS.
5. STEEL ELEVATIONS REFERENCED ON THIS DRAWING ARE THE DISTANCE ABOVE DDG/STORAGE SHELTER FINISH FLOOR ELEVATION 0'-0". FOR THE ACTUAL FINISH FLOOR ELEVATION SEE DWG C04.
6. ROOF DECKING SHALL BE 1 1/2" DEEP WITH WIDE RIB CONFIGURATION AND SIZED FOR THE FOLLOWING:

   DEAD + LIVE LOAD = 27 PSF
   DEAD + WIND LOAD = -37 PSF
   LIVE LOAD = 20 PSF
   MAX LIVE LOAD DEFLECTION = SPAN/240
   DIAPHRAM SHEAR CAPACITY (MIN) = 50 PLF
7. ROOF DECK FASTENING SHALL BE IN ACCORDANCE WITH THE MANUFACTURER'S SPECIFICATIONS TO ACHIEVE THE VERTICAL AND HORIZONTAL DESIGN LOAD REQUIREMENTS. ALL WELDS SHALL BE MADE BY QUALIFIED WELDERS FOLLOWING AWS D1.3 SPECIFICATIONS.
8. FOR ANCHOR BOLT INFORMATION, SEE DRAWING S06.
9. FOR ANCHORAGE REQUIREMENTS OF BASE TRACK FOR EXTERIOR STUD WALLS, SEE "TYPICAL EXTERIOR METAL STUD WALL ANCHORAGE" DETAIL ON DWG S10.

LEGEND

INDICATES DIRECTION OF SPAN FOR METAL DECKING.

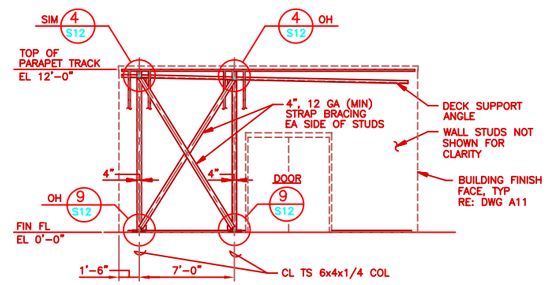

ELEVATION B
SCALE: 1/4" = 1'-0"

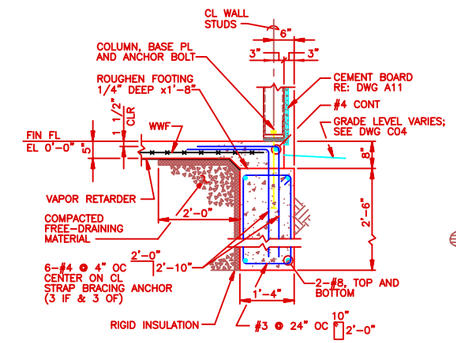

SECTION 2
SCALE: NONE

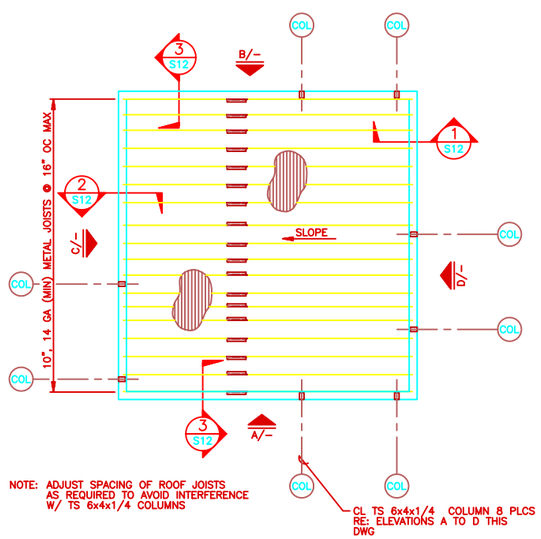

NOTE: ADJUST SPACING OF ROOF JOISTS AS REQUIRED TO AVOID INTERFERENCE W/ TS 6x4x1/4 COLUMNS

ROOF FRAMING PLAN
SCALE: 1/4"=1'-0"

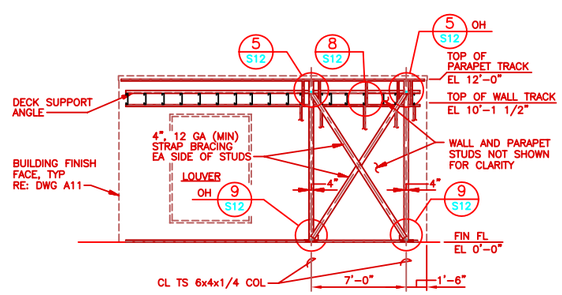

ELEVATION C
SCALE: 1/4" = 1'-0"

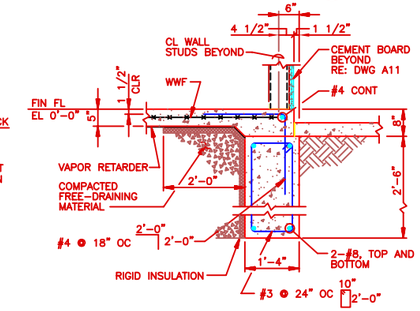

SECTION 3
SCALE: NONE

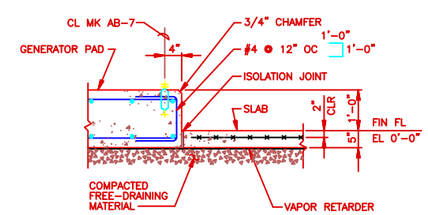

SECTION 4
SCALE: NONE

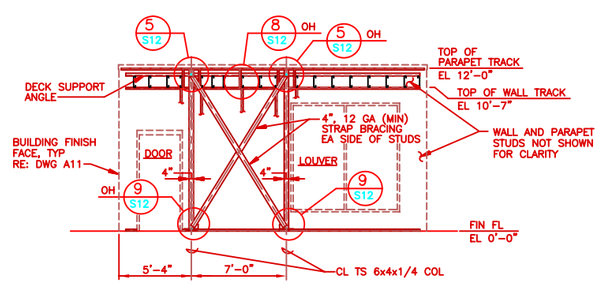

ELEVATION D
SCALE: 1/4" = 1'-0"

0 2' 4' 8' 12'
SCALE: 1/4"=1'-0"

NO.	DATE	PREPARED BY	CHECKED BY	RIS APPROVED	ACOR/CCOR APPROVED	DESCRIPTION OF REVISION
1	10/9/95	JAD	MAS	ERP/RRW	FGR/JTS	REVISED PER AS-BUILT CONDITIONS

WFO / NEXRAD PROGRAM
PROJECT NO. 1001

PROGRAM MANAGEMENT SERVICES CONTRACTOR
FLUOR DANIEL
GOULD EVANS ARCHITECTS, P.A.
KANSAS CITY, MO. U.S.A.

SAFETY SHOULD ALWAYS BE FIRST WITH EVERY TASK YOU DO

SEPO

DRAWN: FUENFHAUSEN
CHECKED: JR. FEAKER
SUP'V. ENGR.: D. LOHE
ENGR./PROJ. MGR.: BLR/RRW
ACOR/CCOR: EHM/JTS

SPECIAL ENGINEERING PROGRAM OFFICE (SEPO)
WEATHER FORECAST OFFICE
GREENVILLE/SPARTANBURG, SC
DDG/STORAGE BUILDING
PLANS, SECTIONS & DETAILS

SIZE	DWG. NO.	CLIN.	REV.
044131- 5	S11	10	1

FDSF00043 KCOS111 JAD 10/03/95@11:09

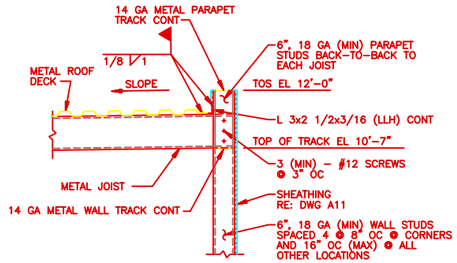

SECTION 1 S11
SCALE: NONE

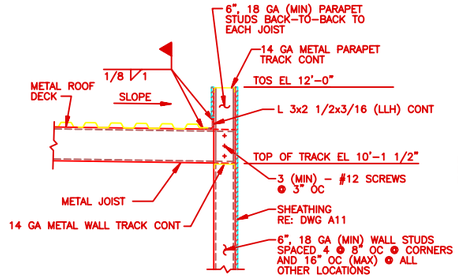

SECTION 2 S11
SCALE: NONE

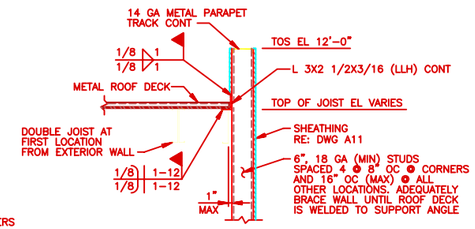

SECTION 3 S11
SCALE: NONE

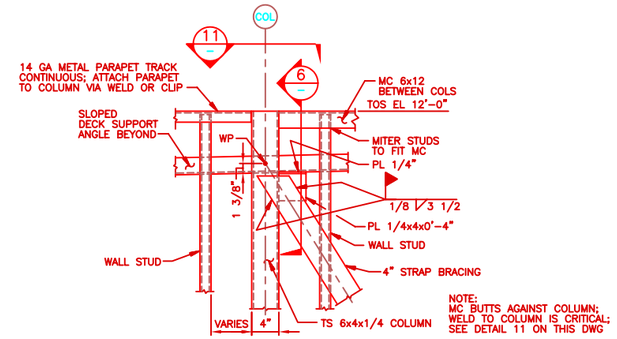

DETAIL 4 S11
SCALE: NONE

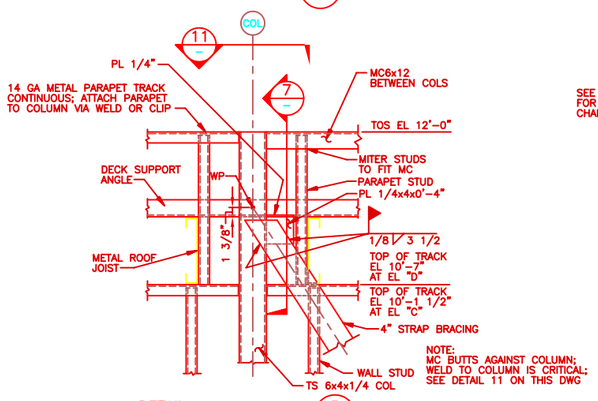

DETAIL 5 S11
SCALE: NONE

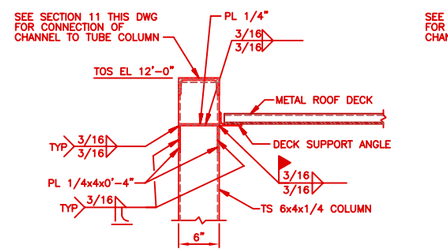

NOTE: STRAP BRACING NOT SHOWN FOR CLARITY.

SECTION 6
SCALE: NONE

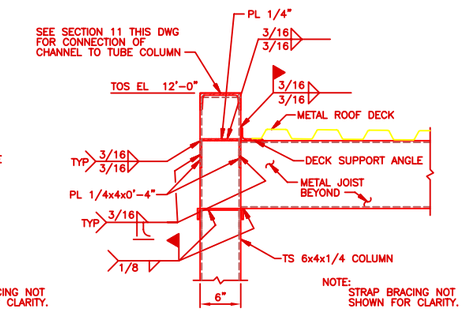

NOTE: STRAP BRACING NOT SHOWN FOR CLARITY.

SECTION 7
SCALE: NONE

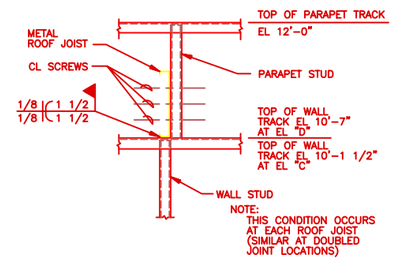

DETAIL 8 S11
SCALE: NONE

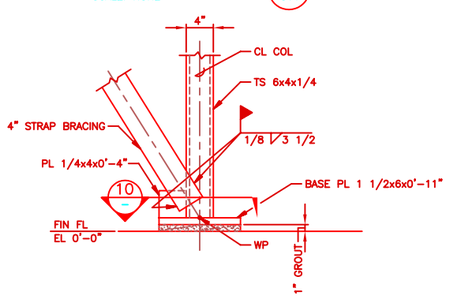

DETAIL 9 S11
SCALE: NONE

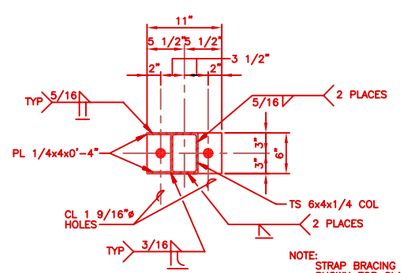

NOTE: STRAP BRACING NOT SHOWN FOR CLARITY.

SECTION 10
SCALE: NONE

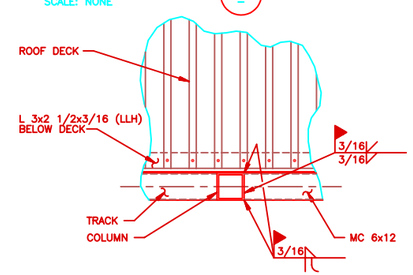

(TYPICAL AT ALL COLUMN TO MC 6x12 CONNECTIONS; 8 PLACES)

SECTION 11
SCALE: NONE

NO.	DATE	PREPARED BY	CHECKED BY	RIS APPROVED	ACOS/COTR APPROVED	DESCRIPTION OF REVISION
1	10/9/95	JAD	MAS	ERP/RRW	FGR/JTS	REVISED PER AS-BUILT CONDITIONS

WFO / NEXRAD PROGRAM
PROJECT NO. 1001

PROGRAM MANAGEMENT SERVICES CONTRACTOR
FLUOR DANIEL
GOULD EVANS ARCHITECTS, P.A.
KANSAS CITY, MO. U.S.A.

SAFETY SHOULD ALWAYS BE FIRST WITH EVERY TASK YOU DO

DRAWN FUENFHAUSEN
CHECKED JR FEAKER
SUPV. ENGR. D. LOHE
ENGR/PROJ. MGR. BLR/RRW
ACOTR/COTR EHM/JTS

SPECIAL ENGINEERING PROGRAM OFFICE (SEPO)

WEATHER FORECAST OFFICE
GREENVILLE/SPARTANBURG, SC

DDG/STORAGE BUILDING
SECTIONS AND DETAILS

SIZE	DWG. NO.	CLIN.	REV.
044131- 5	S12	10	1

FDSP0043 KCOS121 JAD 10/03/95@11:12

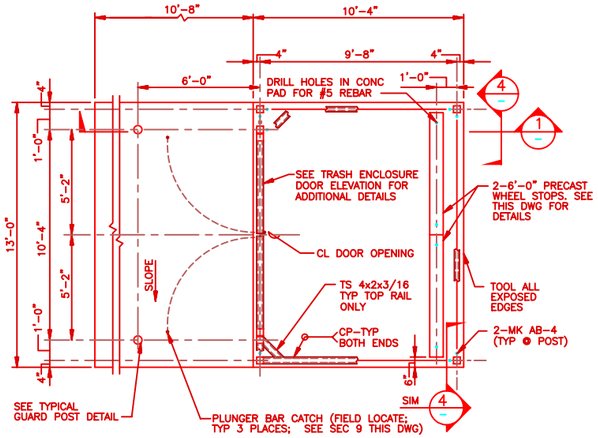

NOTES:
1. SEE DWGS C03 AND C06 FOR LOCATION, FINISH ELEVATIONS, AND ORIENTATION.
2. ALL STEEL TO BE HOT DIPPED GALVANIZED PER ASTM A-123.

TRASH ENCLOSURE PLAN
SCALE: NONE

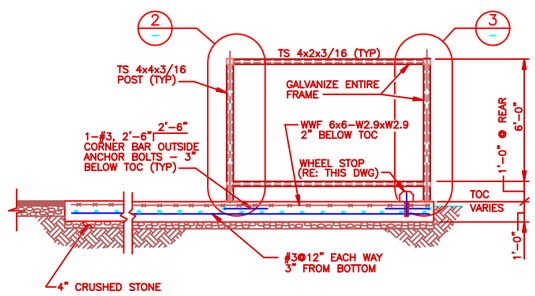

NOTE: ERECT FRAME LEVEL AND PLUMB

SECTION 1
SCALE: NONE

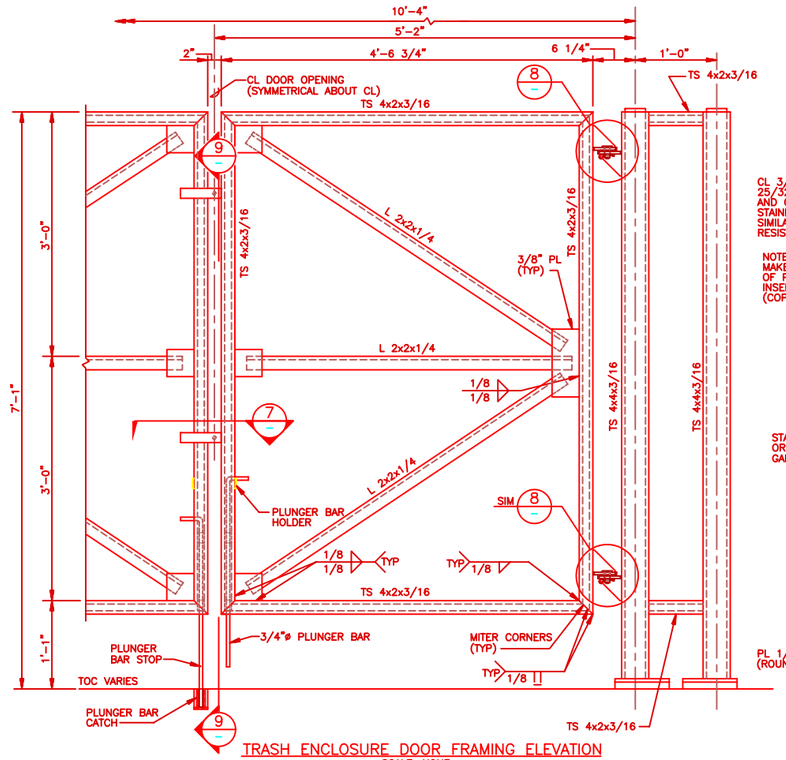

TRASH ENCLOSURE DOOR FRAMING ELEVATION
SCALE: NONE

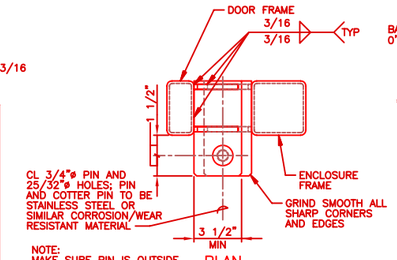

PLAN

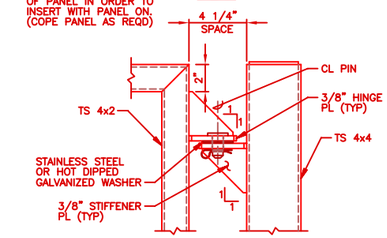

ELEVATION

DETAIL 8
SCALE: NONE

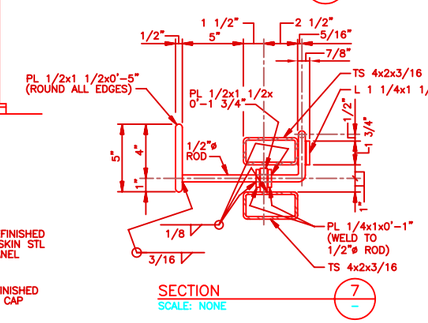

SECTION 7
SCALE: NONE

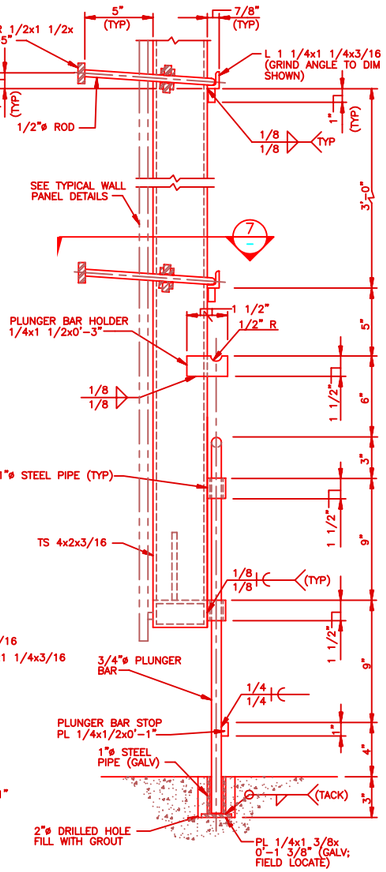

SECTION 9
SCALE: NONE

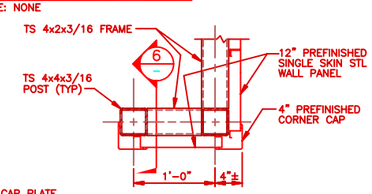

CORNER DETAIL
SCALE: NONE

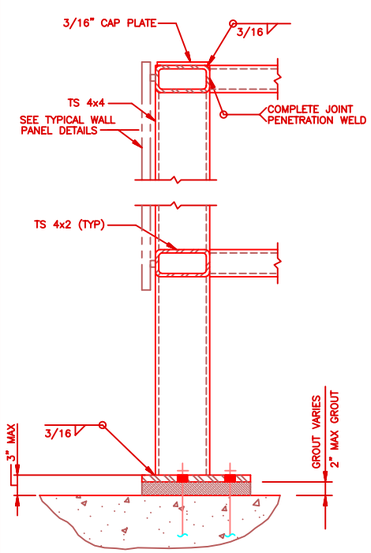

DETAIL 2
SCALE: NONE

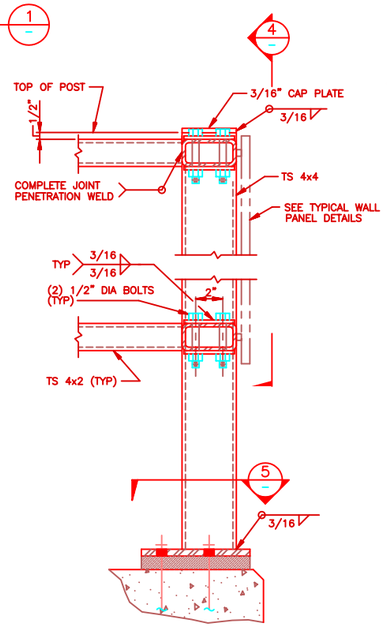

DETAIL 3
SCALE: NONE

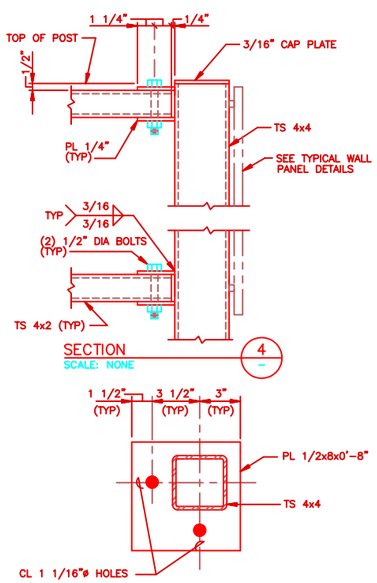

SECTION 4
SCALE: NONE

SECTION 5
SCALE: NONE

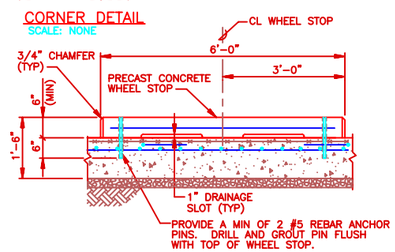

SIDE VIEW

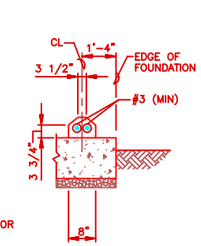

END VIEW

PRECAST WHEEL STOP DETAIL
SCALE: NONE

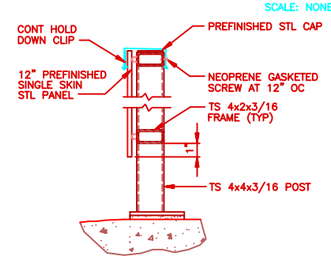

SECTION 6
SCALE: NONE

TYPICAL WALL PANEL DETAILS

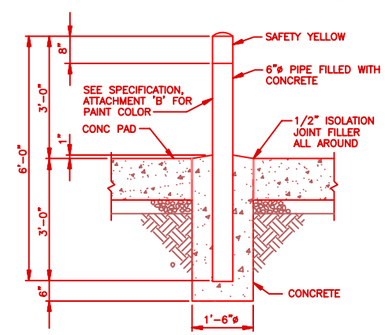

NOTE:
GUARD POSTS SHALL BE FABRICATED FROM SCHEDULE 40 STEEL PIPE CONFORMING TO ASTM A53, GRADE B, TYPE E OR S.

TYPICAL GUARD POST DETAIL
SCALE: NONE

NO.	DATE	PREPARED BY	CHECKED BY	RIS APPROVED	ACTS/CORS APPROVED	DESCRIPTION OF REVISION
1	10/9/95	JAD	MAS	ERP/RRW	FGR/JTS	REVISED PER AS-BUILT CONDITIONS

WFO / NEXRAD PROGRAM
PROJECT NO. I001

PROGRAM MANAGEMENT SERVICES CONTRACTOR
FLUOR DANIEL GUILD EVANS ARCHITECTS, P.A.
KANSAS CITY, MO. U.S.A.

SAFETY SHOULD ALWAYS BE FIRST WITH EVERY TASK YOU DO

DRAWN: FUENHAUSEN
CHECKED: JR PEAKER
SUP'V. ENGR: D LOHE
ENGR/PROJ. MGR: BUR/RRW
ACOS/CORS: EKM/JTS

SPECIAL ENGINEERING PROGRAM OFFICE (SEPO)
WEATHER FORECAST OFFICE
GREENVILLE/SPARTANBURG, SC
TRASH ENCLOSURE
PLANS, SECTIONS & DETAILS

044131-	SIZE 5	DWG. NO. S13	CURR. 10	REV. 1

FDSP0043 KC05131 JAD 10/03/95@11:15

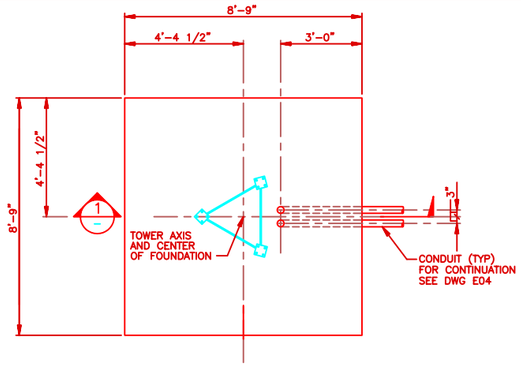

PLAN
ROHN TOWER FOUNDATION
SCALE: 1/2"=1'-0"
(SEE DWG C02 FOR LOCATION)

GRID NORTH

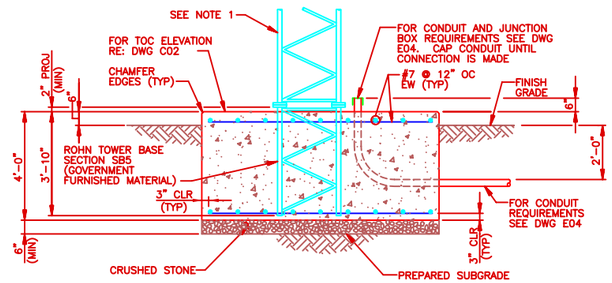

SECTION 1
SCALE: NONE

ROHN TOWER NOTES

1. THE CONTRACTOR SHALL INSTALL (1) 20' 5N TOWER SECTION, (1) 20' 4N SECTION, AND (1) 10' 3WNB TOP SECTION IN ACCORDANCE WITH MANUFACTURER'S RECOMMENDATIONS. 5N AND 4N SECTIONS REQUIRE ASSEMBLY PRIOR TO STACKING. ALL TOWER SECTIONS SHALL BE GOVERNMENT FURNISHED MATERIAL, SEE SPECIFICATION SECTION 01020.

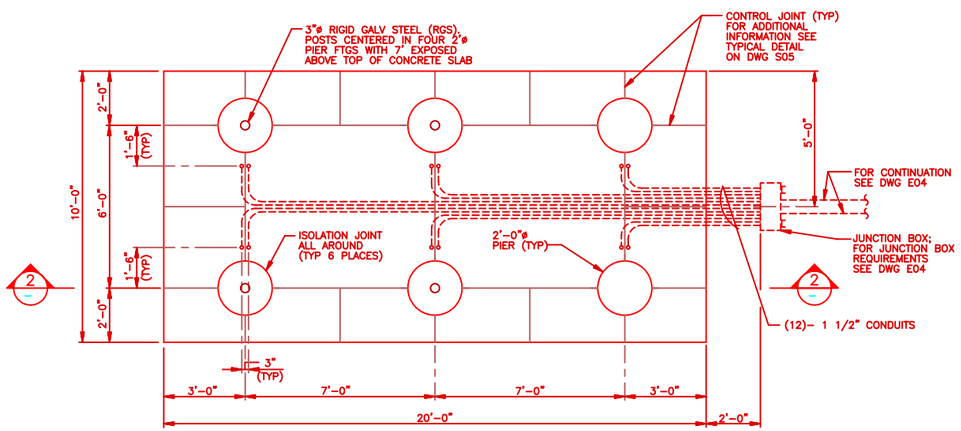

ANTENNA PLOT PLAN
SCALE: 1/2"=1'-0"
(SEE DWG C02 FOR LOCATION)

GRID NORTH

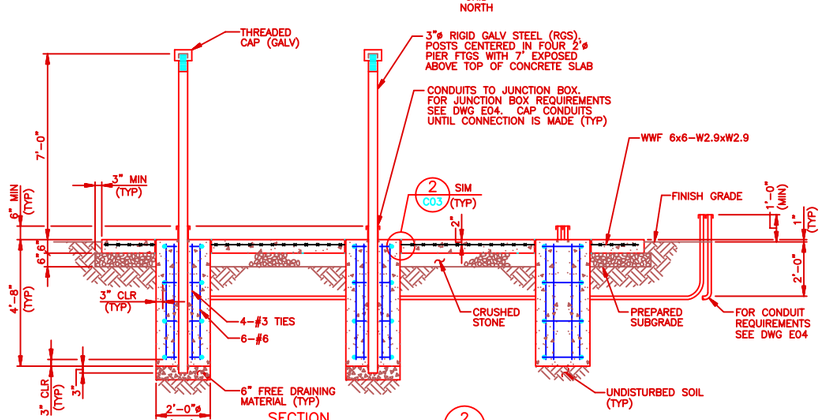

SECTION 2
SCALE: NONE

0 1' 2' 4' 6'
SCALE: 1/2"=1'-0"

NO.	DATE	PREPARED BY	CHECKED BY	APPROVED	ACCEPTED/APPROVED	DESCRIPTION OF REVISION
1	10/9/95	JAD	MAS	ERP/RRW	FGR/JTS	REVISED PER AS-BUILT CONDITIONS

WFO / NEXRAD PROGRAM
PROJECT NO. 1001

PROGRAM MANAGEMENT SERVICES CONTRACTOR
FLUOR DANIEL
GOULD EVANS ARCHITECTS, P.A.
KANSAS CITY, MO. U.S.A.

SAFETY SHOULD ALWAYS BE FIRST WITH EVERY TASK YOU DO

DRAWN FUENFHAUSEN
CHECKED JR FEAKER
SUPV. ENGR. D. LOHE
ENGR/PROJ. MGR. BLR/RRW
ACCPTR./CORR. EHM/JTS

SPECIAL ENGINEERING PROGRAM OFFICE (SEPO)
WEATHER FORECAST OFFICE
GREENVILLE/SPARTANBURG, SC
MISCELLANEOUS
YARD STRUCTURES

SIZE	DWG. NO.	CLM.	REV.
044131-	5	S14	10	1

FDSP0043 KCOS141 JAD 10/03/95@11:18

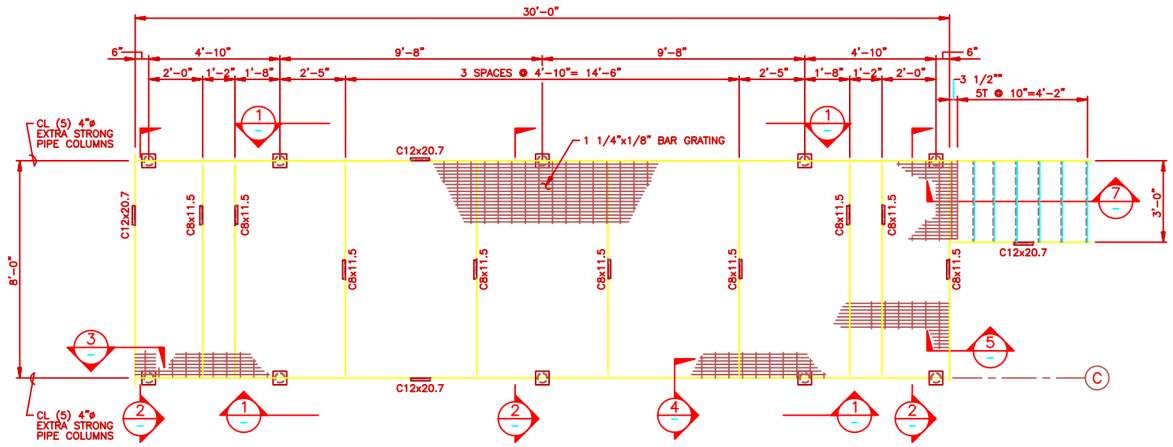

ROOF TOP ANTENNA PLATFORM FRAMING PLAN
SCALE: 1/2"=1'-0"

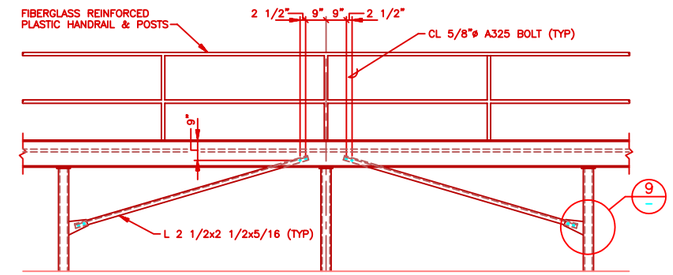

SECTION 1
SCALE: NONE

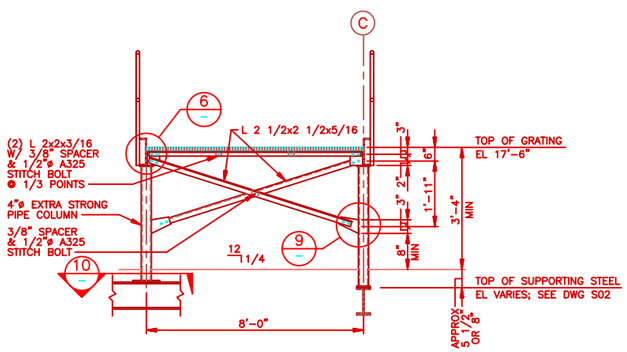

SECTION 2
SCALE: NONE

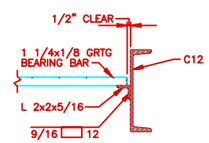

SECTION 3
SCALE: NONE

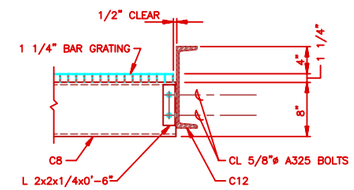

SECTION 4
SCALE: NONE
(TYP CHANNEL END CONNECTION UON)

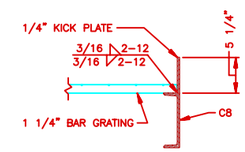

SECTION 5
SCALE: NONE

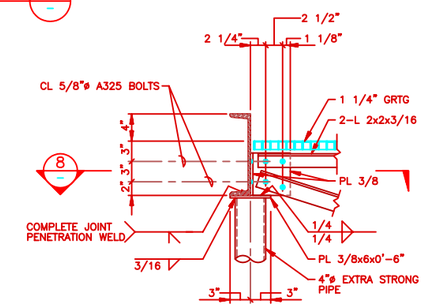

DETAIL 6
SCALE: NONE

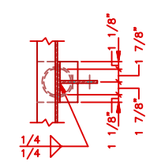

SECTION 8
SCALE: NONE

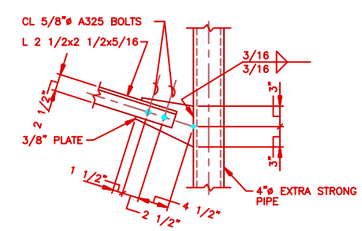

DETAIL 9
SCALE: NONE

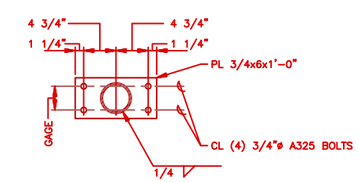

SECTION 10
SCALE: NONE

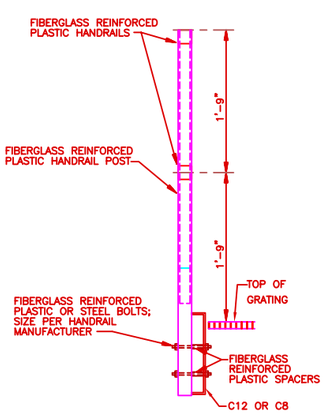

LANDING MOUNTED

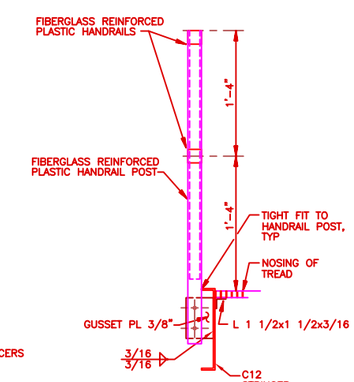

STRINGER MOUNTED

TYPICAL FIBERGLASS REINFORCED PLASTIC HANDRAIL DETAILS
SCALE: 1 1/2"=1'-0"

NOTE: COORDINATE LOCATION OF HANDRAIL POST ATTACHMENT GUSSET PLATES WITH HANDRAIL SUPPLIER

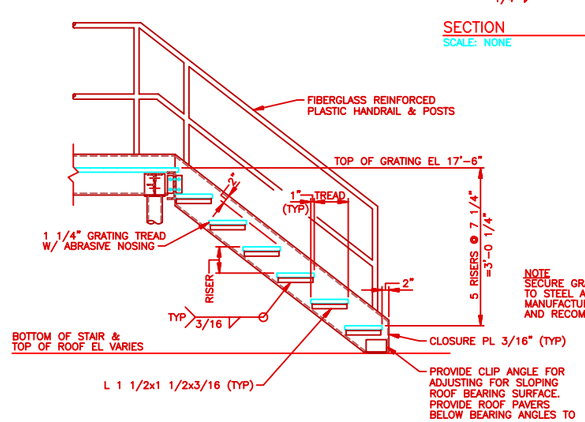

NOTE
SECURE GRATING TREADS TO STEEL ANGLE PER MANUFACTURER'S DETAILS AND RECOMMENDATION

SECTION 7
SCALE: NONE

0 6" 1' 2'
SCALE: 1 1/2"=1'-0"

0 1' 2' 4' 6'
SCALE: 1/2"=1'-0"

NOTES

1. HANDRAIL SHALL BE CONSTRUCTED OF PREFABRICATED FIBERGLASS REINFORCED PLASTIC MATERIALS.
2. HANDRAIL SHALL HAVE MAX 4'-9" POST SPACING.
3. HANDRAIL SHALL INCLUDE BOLTS, ANCHORS, FITTINGS AND ADDITIONAL ITEMS AS INDICATED OR REQUIRED FOR FASTENING TO SUPPORT MEMBER.
4. FIBERGLASS HANDRAILS MUST WITHSTAND 200 LBS POINT LOAD APPLIED AT ANY POINT VERTICALLY OR HORIZONTALLY.
5. ALL FIBERGLASS REINFORCED PLASTIC HANDRAIL CONNECTIONS SHALL BE PER MANUFACTURERS STANDARD DETAILS AND RECOMMENDATIONS.
6. HOT-DIP GALVANIZE ALL STEEL REQUIRED FOR THE STAIR AND PLATFORM.

NO.	DATE	PREPARED BY	CHECKED BY	RSI APPROVED	ACOE/COTR APPROVED	DESCRIPTION OF REVISION
1	10/9/95	JAD	MAS	ERP/RRW	FGR/JTS	REVISED PER AS-BUILT CONDITIONS

WFO / NEXRAD PROGRAM
PROJECT NO. 1001

PROGRAM MANAGEMENT SERVICES CONTRACTOR
FLUOR DANIEL
GOULD EVANS ARCHITECTS, P.A.
KANSAS CITY, MO. U.S.A.

SAFETY SHOULD ALWAYS BE FIRST WITH EVERY TASK YOU DO

DRAWN FUSINHAUSEN
CHECKED JR FEAKER
SUPV. ENGR. D LOHE
ENGR/PROJ. MGR. BLR/RRW
ACOTR/COTR EPM/JTS

SPECIAL ENGINEERING PROGRAM OFFICE (SEPO)
WEATHER FORECAST OFFICE
GREENVILLE/SPARTANBURG, SC
ANTENNA PLATFORM PLANS, SECTIONS AND DETAILS

044131- | SIZE 5 | DWG. NO. S15 | CLIN. 10 | REV. 1

FDSP0043 KCOS151 JAD 10/03/95@11:27